DSA APPROVED (INCLUDES ADDENDUM ONE REVISIONS)

EDUCATIONAL BUILDINGS AND CENTRAL PLANT

DSA APLICATION NO. 01-105719

SAN RAMON VALLEY CENTER

CONTRA COSTA COMMUNITY COLLEGE DISTRICT

SAN RAMON, CALIFORNIA

CONSTRUCTION DOCUMENTS
MARCH 9, 2004

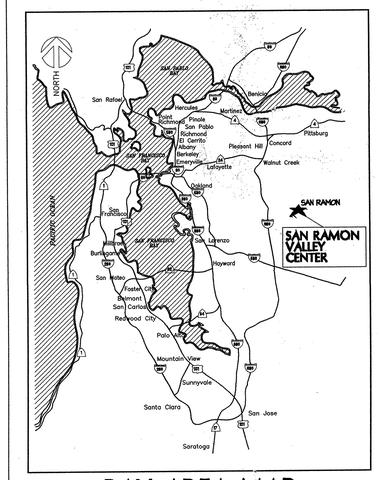

BAY AREA MAP

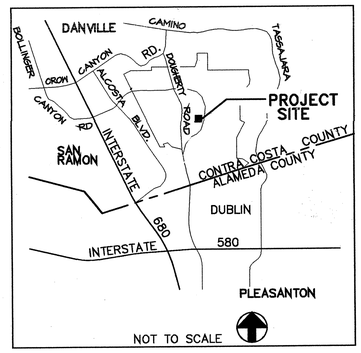

AREA MAP

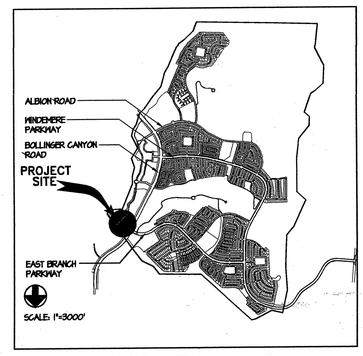

VICINITY MAP

tBP /Architecture
1000 Burnett Avenue, Suite 140, Concord, CA 94520-2058
http://www.tbparchitecture.com - email: info@tbparchitecture.com
ph: 925.246.6419 - fax: 925.246.6495

APPROVED
~~IDENTIFICATION~~ STAMP
DIVISION OF THE STATE ARCHITECT
01-105719
APPL 01 ~~106062~~
ALLY W
AC FLS SS
DATE 6-9-04

tBP
Architecture
Planning
Interiors
Management

Important Bidding Note:
A single bid is required which must include all information from both sets of the following documents:
- Site Improvements Drawings and Specs (DSA application No. 01-106062)
- Educational Buildings and Central Plant Drawings and Specs (DSA application No. 01-105719)

GENERAL NOTES

PRE-BID SITE VISIT
CONTRACTOR SHALL, AS A CONDITION OF AN ACCEPTABLE BID, VISIT THE PROJECT AREA IN ORDER TO BECOME FAMILIAR WITH EXISTING CONDITIONS AND THE REQUIREMENTS OF THE PROJECT. CONTRACTOR MAY CONTACT THE ARCHITECT DURING THE BIDDING PHASE REGARDING CLARIFICATIONS AND PROJECT REQUIREMENTS.

SAFETY
IN ACCORDANCE WITH GENERALLY ACCEPTED CONSTRUCTION PRACTICES, THE CONTRACTOR WILL BE SOLELY AND COMPLETELY RESPONSIBLE FOR CONDITIONS OF THE JOB SITE INCLUDING SAFETY OF ALL PERSONS AND PROPERTY DURING PERFORMANCE OF THE WORK. THIS REQUIREMENT WILL APPLY CONTINUOUSLY AND NOT BE LIMITED TO NORMAL WORKING HOURS.

DAMAGE TO STRUCTURE OR SYSTEMS TO REMAIN
CONTRACTOR SHALL REIMBURSE OWNER FOR REPAIR AND REPLACEMENT, TOGETHER WITH ARCHITECT'S FEES, FOR ANY DAMAGE CAUSED TO STRUCTURES OR EXISTING SYSTEMS TO REMAIN, AS THE RESULT OF CONSTRUCTION OPERATIONS.

EXISTING CONDITIONS
ALL INFORMATION RELATING TO EXISTING CONSTRUCTION IS GIVEN AS BEING THE BEST INFORMATION AVAILABLE, BUT WITHOUT GUARANTEE OF ACCURACY. THE CONTRACTOR SHALL VERIFY ALL EXISTING CONDITIONS, DIMENSIONS, AND BUILDING DATA AT THE JOB SITE. ANY DISCREPANCIES REQUIRING MODIFICATION TO THE CONSTRUCTION DOCUMENTS SHALL BE REPORTED TO THE ARCHITECT IMMEDIATELY. NO MODIFICATIONS SHALL BE MADE BY THE CONTRACTOR WITHOUT APPROVAL FROM THE ARCHITECT.

CONTRACTOR'S EQUIPMENT
COORDINATE WITH OWNER'S REPRESENTATIVE LOCATION OF CONTRACTOR'S BUILDING ENTRANCE AND LOCATION OF CONTRACTOR'S EQUIPMENT AND MATERIAL STORAGE AREA. SEE SITE PLAN FOR ADDITIONAL NOTES.

UTILITY SHUT-DOWNS AND CONNECTIONS
BEFORE THE SHUT-DOWN OR TYING INTO ANY UTILITY, PRIOR APPROVAL SHALL BE OBTAINED FROM THE OWNER'S REPRESENTATIVE.

CONSTRUCTION SCHEDULING
CONTRACTOR SHALL COORDINATE ALL CONSTRUCTION OPERATIONS WITH OWNER'S REPRESENTATIVE PRIOR TO SCHEDULING AND START OF THE WORK. CONTRACTOR SHALL PROVIDE PROTECTION TO ALL EXISTING SPACES AND SYSTEMS WHICH ARE IN USE AND ARE ADJOINING THE WORK AND ARE NOT PART OF THE WORK.

INTERIOR FINISHES
INTERIOR FINISHES AND ALL WALL COVERING MATERIAL SHALL CONFORM TO CCR TITLE 24, PART 2, CHAPTER 4A, SECTION 420A.9.

PIPES, DUCTS AND CONDUIT - SUPPORT AND BRACING
PIPES, DUCTS, AND CONDUITS SHALL BE SUPPORTED AND BRACED PER THE SMACNA "GUIDELINES FOR SEISMIC RESTRAINTS OF MECHANICAL SYSTEMS AND PLUMBING PIPING SYSTEMS", NO. R-0003 THE SUPERSTRUT "SEISMIC RESTRAINT SYSTEM" FOR PIPES AND CONDUITS ONLY OR NO. R-0071 THE KIN-LINE "SEISMIC RESTRAINT SYSTEM" FOR PIPES AND CONDUITS ONLY.

DRILLED IN EXPANSION ANCHORS
WHEN INSTALLING DRILLED-IN ANCHORS AND/OR POWDER DRIVEN PINS IN EXISTING NON-PRESTRESSED REINFORCED CONCRETE, USE CARE AND CAUTION TO AVOID CUTTING OR DAMAGING THE EXISTING REINFORCING BARS.

ANCHORAGE FOR EQUIPMENT
ATTACHMENTS OF EQUIPMENT WEIGHING LESS THAN 400 POUNDS AND SUPPORTED DIRECTLY ON THE FLOOR OR ROOF STRUCTURE, FURNITURE OR TEMPORARY OR MOVEABLE EQUIPMENT AND EQUIPMENT WEIGHING LESS THAN 20 POUNDS THAT IS SUPPORTED BY VIBRATION ISOLATION DEVICES SUSPENDED FROM THE ROOF, WALL OR FLOOR NEED NOT BE DETAILED ON THE PLANS. (C.G.R. TITLE 24, PART 2, CHAPTER 16 - SECTION 1630A.) HOWEVER, SUCH EQUIPMENT MUST BE SUPPORTED AND ANCHORED TO RESIST THE FORCES PRESCRIBED BY SECTION 1630A.2 AND THE ANCHORAGE SHALL BE APPROVED BY THE STRUCTURAL ENGINEER OF RECORD.

GENERAL CONSTRUCTION NOTES

1.0 **GENERAL:**
1.1 SLABS ON GRADE: SEE STRUCTURAL DWGS. FOR CONSTRUCTION.
1.2 AUTOMATIC SPRINKLER SYSTEMS SHALL COMPLY WITH THE REQUIREMENTS OF U.B.C. STANDARD 38-1. PENETRATIONS OF RATED ASSEMBLIES SHALL BE FIRESTOPPED. FIRESTOPPING SHALL BE AN APPROVED MATERIAL AS PRESCRIBED IN STATE FIRE MARSHAL STANDARD 43-1.
1.3 FIRESTOPPING: MAINTAIN THE INTEGRITY OF FIRE RATED WALLS BY PROVIDING FIRE SAFING MATERIAL AT GAPS AND VOIDS CREATED BY PENETRATIONS, STRUCTURAL MEMBERS AND INTERSECTIONS WITH ADJACENT SURFACES. PACK ALL GAPS GREATER THAN 3/4" WITH "BLANKET"-TYPE SAFING. PROVIDE FIRE STOP SEALANT AT ALL JOINTS AND VOIDS LESS THAN 3/4" CLEAR. ALL MATERIAL SHALL BE U.L., S.F.M. OR D.S.A. APPROVED, AND CAPABLE OF PREVENTING PASSAGE OF FLAMES AND HOT GASSES WHEN SUBJECTED TO THE REQUIREMENTS OF U.B.C. STANDARD 43-1.
1.4 DIMENSIONS: UNLESS OTHERWISE NOTED, DIMENSIONS SHALL BE TO THE FACE OF FINISH.
1.5 REFERENCE ELEVATION: FINISH GROUND FLOOR ELEVATION FOR THIS BUILDING IS 77.00'. THIS IS DATUM (REFERENCE 0'-0").

3.0 **EXTERIOR WALLS:**
ALL EXTERIOR STUD WALLS SHALL BE CONSTRUCTED ON 6" HIGH CONCRETE CURBS, UNLESS NOTED OR DETAILED OTHERWISE.

4.0 **INTERIOR PARTITIONS:**
ALL INTERIOR PARTITIONS IN AND SURROUNDING AREAS WITH THICKSET FLOOR TILE (SUCH AS RESTROOMS AND KITCHEN AREAS) SHALL BE CONSTRUCTED ON 6" HIGH CONCRETE CURBS, UNLESS NOTED OR DETAILED OTHERWISE.

5.0 **STRUCTURAL FRAME:**
5.1 PRIMARY: THE STRUCTURAL FRAME SHALL BE CONSIDERED TO BE THE COLUMNS AND THE GIRDERS, BEAMS, TRUSSES AND SPANDRELS HAVING DIRECT CONNECTIONS WITH THE COLUMNS, AND BRACING MEMBERS DESIGNED TO CARRY GRAVITY LOADS.
5.2 SECONDARY: THE MEMBERS OF FLOOR OR ROOF PANELS THAT HAVE NO CONNECTION TO THE COLUMNS SHALL BE CONSIDERED SECONDARY MEMBERS, AND NOT A PART OF THE STRUCTURAL FRAME.

7.0 **THERMAL AND MOISTURE PROTECTION:**
7.1 SEE CODE ANALYSIS ON SHEET T-2 & T-3 FOR FIRE RESISTIVE CONSTRUCTION REQUIREMENTS.
7.2 SEAL ALL JOINTS SUBJECT TO EXPANSION, CONTRACTION OR OTHER MOVEMENT:
1. TILE, TOILET FIXTURE JOINTS - SILICON RUBBER.
2. INTERIOR GLAZING JOINTS, JOINTS AT SILICON RUBBER.
3. EXTERIOR JOINTS ON VERTICAL SURFACES - POLYURETHANE (NON-SAG).
4. HORIZONTAL PAVING JOINTS - POLYURETHANE (SELF LEVELING).
5. PRECOMPRESSED EXPANDED SEALANT TAPE.
6. PAVEMENT JOINT FILLER - RES., PREMOLDED ASPH. IMPREG. FIBERED.
7. PRIMERS, BOND BREAKERS, AND BACKING MATERIAL.
8. AS DIRECTED AND APPROVED BY SEALANT MANUFACTURERS.
9. SAFE AND COMPATIBLE WITH ADJACENT SURFACES.

PROVIDE COMPLETE SEALING OF JOINTS IN OR BETWEEN SURFACES SUBJECT TO PENETRATION BY AIR OR WATER:
1. TILE, TOILET FIXTURE JOINTS - SILICON RUBBER.
2. SELECT TYPE AS SCHEDULED - SEE SPECIFICATIONS.

8.0 **DOORS AND WINDOWS:**
8.1 ACCESS DOORS: PROVIDE METAL ACCESS DOORS IN PARTITIONS AND HARD CEILINGS AT THE LOCATION OF ALL BUILDING ELEMENTS WHICH REQUIRE ACCESS. BUILDING ELEMENTS WHICH REQUIRE ACCESS INCLUDE ALL FIRE, FIRE/SMOKE, AND VOLUME DAMPERS, FILTERS, VALVES, FUSIBLE LINKS, MECHANICAL AND ELECTRICAL JUNCTION BOXES, AND OVERHEAD DOOR/GRILLE MOTORS AND EQUIPMENT. PROVIDE ADDITIONAL ACCESS DOORS WHERE SHOWN, SCHEDULED, OR NOTED IN PLANS OR SPECS. ALL ACCESS DOORS LOCATED IN FIRE RATED PARTITIONS OR CEILINGS SHALL HAVE A U.L. FIRE RATING EQUAL TO THAT OF THE PARTITION OR CEILING WHERE IT IS INSTALLED.
8.2 LOUVERS: PROVIDE LOUVERS WHERE SHOWN ON MECHANICAL PLANS, IN ADDITION TO THOSE SHOWN ON THE ARCHITECTURAL PLANS.
8.3 ALL GLAZING IN AND ADJACENT TO DOORS, AND WHERE REQUIRED BY THE C.B.C., SHALL BE FULLY TEMPERED, U.O.N.
8.4 ALL GLAZING OCCURRING IN FIRE RATED PARTITIONS SHALL BE UL LISTED WIRE GLASS.

10.0 **FIRE EXTINGUISHERS:**
PORTABLE FIRE EXTINGUISHERS SHALL BE OWNER FURNISHED (SEE SPECIFICATIONS FOR TYPE), AND SHALL HAVE VALID CERTIFICATION TAG ATTACHED.

APPLICABLE STATE CODES

2001 BUILDING STANDARDS ADMINISTRATIVE CODE, PART 1, TITLE 24 C.G.R.
2001 CALIFORNIA BUILDING CODE (CBC), PART 2, TITLE 24 C.G.R.
2001 CALIFORNIA ELECTRICAL CODE (CEC), PART 3, TITLE 24 C.G.R.
2001 CALIFORNIA MECHANICAL CODE (CMC), PART 4, TITLE 24 C.G.R.
2001 CALIFORNIA PLUMBING CODE (CPC), PART 5, TITLE 24 C.G.R.
2001 CALIFORNIA ELEVATOR SAFETY CONSTRUCTION CODE, PART 7, TITLE 24 C.G.R.
2001 CALIFORNIA FIRE CODE (CFC), PART 9, TITLE 24 C.G.R.
2001 CALIFORNIA REFERENCED STANDARDS CODE (CRSC), PART 12, TITLE 24 C.G.R.
1980 TITLE 19 C.G.R. PUBLIC SAFETY, STATE FIRE MARSHAL REGULATIONS

PARTIAL LIST APPLICABLE STATE STANDARDS
NFPA 13, AUTOMATIC SPRINKLER SYSTEMS, 1996 EDITION
NFPA 72, NATIONAL FIRE ALARM CODE (CA AMENDED) 1996 EDITION (NOTE SEE UL STANDARD 1971 FOR "VISUAL DEVICES")
REFERENCE CODE SECTION FOR NFPA STANDARDS-CBC (SFM) 3504.1
ASME A17.1-1993 FOR SECTION 7-3044 PART 7, C.G.R. TITLE 24
ASME A18.1-1999 FOR SECTION 7-3044 PART 7, C.G.R. TITLE 24
ASTM F 1487-98 FOR PLAYGROUND SURFACE SYSTEMS UNDER AND AROUND PLAYGROUND EQUIPMENT

DRAWING LIST

GENERAL
T.0 COVER SHEET
T.1A GEN. NOTES, DRAWING LIST, CODE REVIEW, PROJECT DIRECTORY
T.1B ABBREVIATIONS, DRAFTING SYMBOLS
T.2 EXITING PLAN & CODE ANALYSIS - FIRST FLOOR
T.3 EXITING PLAN & CODE ANALYSIS - SECOND FLOOR

ARCHITECTURAL DRAWINGS
A5.1 BUILDING LOCATION PLAN
A0.11 FIRST FLOOR HORIZONTAL CONTROL PLAN - WEST
A0.12 FIRST FLOOR HORIZONTAL CONTROL PLAN - EAST
A0.21 SECOND FLOOR HORIZONTAL CONTROL PLAN - WEST
A0.22 SECOND FLOOR HORIZONTAL CONTROL PLAN - EAST
A1.10 FIRST FLOOR PLAN - OVERALL
A1.11 FIRST FLOOR PLAN - WEST
A1.12 FIRST FLOOR PLAN - EAST
A1.20 SECOND FLOOR PLAN - OVERALL
A1.21 SECOND FLOOR PLAN - WEST
A1.22 SECOND FLOOR PLAN - EAST
A1.30 ATTIC PLAN - OVERALL
A1.31 ATTIC PLAN - WEST
A1.32 ATTIC PLAN - EAST
A2.11 REFLECTED CEILING PLAN - FIRST FLOOR - WEST
A2.12 REFLECTED CEILING PLAN - FIRST FLOOR - EAST
A2.21 REFLECTED CEILING PLAN - SECOND FLOOR - WEST
A2.22 REFLECTED CEILING PLAN - SECOND FLOOR - EAST
A3.10 ROOF PLAN - OVERALL
A3.11 ROOF PLAN - WEST
A3.12 ROOF PLAN - EAST
A4.10 EXTERIOR ELEVATIONS - OVERALL
A4.11 EXTERIOR ELEVATIONS - SOUTH
A4.12 EXTERIOR ELEVATIONS - NORTH
A4.13 EXTERIOR ELEVATIONS - WEST
A4.14 EXTERIOR ELEVATIONS - EAST
A5.10 BUILDING SECTIONS
A5.11 BUILDING SECTIONS
A5.12 BUILDING SECTIONS
A5.13 BUILDING SECTIONS
A6.10 WALL SECTIONS
A6.11 WALL SECTIONS
A6.12 WALL SECTIONS
A6.13 WALL SECTIONS
A6.14 WALL SECTIONS
A6.15 WALL SECTIONS
A6.16 WALL SECTIONS
A6.17 WALL SECTIONS
A6.18 WALL SECTIONS
A7.10 ENLARGED RESTROOMS AND STAIRS PLANS
A7.11 ENLARGED RESTROOMS AND STAIRS PLANS
A7.12 ENLARGED RESTROOMS AND DETAILS
A8.10 INTERIOR ELEVATIONS
A8.11 INTERIOR ELEVATIONS
A8.12 INTERIOR ELEVATIONS
A8.13 INTERIOR ELEVATIONS
A8.14 ENLARGED RESTROOM INTERIOR ELEVATIONS
A9.11 FIRST FLOOR RFI#1 PLAN - WEST
A9.12 FIRST FLOOR RFI#1 PLAN - EAST
A9.21 SECOND FLOOR RFI#1 PLAN - WEST
A9.22 SECOND FLOOR RFI#1 PLAN - EAST
A10.10 CP FLOOR / ROOF AND REFLECTED CEILING PLAN
A10.20 CP EXTERIOR ELEVATIONS AND SECTIONS
A10.30 CP WALL SECTION
2.01 SITE DETAILS
3.01 EXTERIOR DETAILS
4.01 TYPICAL METAL STUD DETAILS
4.02 INTERIOR PARTITIONS & MISC. DETAILS
4.03 TYPICAL PARTITION DETAILS
5.01 TYPICAL ACOUSTICAL PANEL CEILING DETAILS
5.02 TYPICAL SUSPENDED PLASTER / GYP. BD. DETAILS
6.01 MIC CABINET DESIGNS
6.50 TYP. CASEWORK DETAILS
7.01 ROOF DETAILS
7.02 ROOF DETAILS
8.01 DOOR SCHEDULE
8.01 CP DOOR AND FINISH SCHEDULE
8.02 DOOR SCHEDULE
8.50 DOOR DETAILS
8.51 DOOR DETAILS
8.80 WINDOW & LOUVER SCHEDULE
8.81 WINDOW SCHEDULE
8.82 WINDOW DETAILS
9.01 FINISH SCHEDULE
9.02 FINISH SCHEDULE
9.50 INTERIOR DETAILS
10.01 EXTERIOR STAIR DETAILS
10.02 INTERIOR STAIR DETAILS
10.03 ELEVATOR DETAILS & LADDER DETAILS
11.01 TYPICAL SIGNAGE

STRUCTURAL DRAWINGS
S1.0 GENERAL NOTES
S2.11 FIRST FLOOR PLAN WEST
S2.12 FIRST FLOOR PLAN EAST
S2.21 SECOND FLOOR FRAMING PLAN - WEST
S2.22 SECOND FLOOR FRAMING PLAN - EAST
S2.31 ATTIC FRAMING PLAN - WEST
S2.32 ATTIC FRAMING PLAN - EAST
S2.41 ROOF FRAMING PLAN - WEST
S2.42 ROOF FRAMING PLAN - EAST
S2.51 CENTRAL PLANT
S3.1 BUILDING FRAME ELEVATIONS
S3.2 BUILDING FRAME ELEVATIONS
S3.3 BUILDING FRAME ELEVATIONS
S5.1 CONCRETE TYPICAL DETAILS
S5.2 CONCRETE DETAILS
S5.3 CONCRETE DETAILS
S6.1 MASONRY TYPICAL DETAILS
S7.1 METAL DECK TYPICAL DETAILS
S7.2 STEEL TYPICAL DETAILS
S7.3 MOMENT FRAME DETAILS
S7.4 MISC. STEEL AND BRACED FRAME DETAILS
S7.5 STEEL DETAILS
S7.6 STEEL DETAILS
S7.7 STEEL DETAILS
S7.8 STEEL DETAILS
S7.9 STEEL DETAILS
S7.10 LOW ROOF FRAMING
S7.11 DETAILS
S7.12 STEEL DETAILS

MECHANICAL DRAWINGS
MP1.0 MECHANICAL / PLUMBING - SITE PLAN
M1.1 CP MECHANICAL CENTRAL PLANT
M0.1 MECHANICAL - LEGEND, SCHEDULES & NOTES
M0.2 MECHANICAL - SCHEDULES
M1.0 MECHANICAL - OVERALL 1ST FLOOR PLAN
M1.1 MECHANICAL - PARTIAL 1ST FLOOR PLAN
M1.2 MECHANICAL - PARTIAL 1ST FLOOR PLAN
M1.3 MECHANICAL - PARTIAL 1ST FLOOR PLAN
M1.4 MECHANICAL - PARTIAL 1ST FLOOR PLAN
M1.5 MECHANICAL - PARTIAL 1ST FLOOR PLAN
M1.6 MECHANICAL - PARTIAL 1ST FLOOR PLAN
M2.0 MECHANICAL - OVERALL 2ND FLOOR PLAN
M2.1 MECHANICAL - PARTIAL 2ND FLOOR PLAN
M2.2 MECHANICAL - PARTIAL 2ND FLOOR PLAN
M2.3 MECHANICAL - PARTIAL 2ND FLOOR PLAN
M2.4 MECHANICAL - PARTIAL 2ND FLOOR PLAN
M2.5 MECHANICAL - PARTIAL 2ND FLOOR PLAN
M2.6 MECHANICAL - PARTIAL 2ND FLOOR PLAN
M3.1 MECHANICAL - PARTIAL ATTIC PLAN
M3.2 MECHANICAL - PARTIAL ATTIC PLAN
M4.1 MECHANICAL - PARTIAL 1ST FLOOR HYDRONIC PLAN
M4.2 MECHANICAL - PARTIAL 1ST FLOOR HYDRONIC PLAN
M4.3 MECHANICAL - PARTIAL 2ND FLOOR HYDRONIC PLAN
M4.4 MECHANICAL - PARTIAL 2ND FLOOR HYDRONIC PLAN
M5.1 MECHANICAL - CONTROL DIAGRAMS
M5.2 MECHANICAL - PIPING DIAGRAMS
M6.1 MECHANICAL - DETAILS
M6.2 MECHANICAL - DETAILS
M6.3 MECHANICAL - DETAILS

PLUMBING DRAWINGS
P0.1 PLUMBING - LEGEND, SCHEDULES AND NOTES
P1.1 CP PLUMBING - CENTRAL PLANT
P1.1 PLUMBING - PARTIAL 1ST FLOOR PLAN
P1.2 PLUMBING - PARTIAL 1ST FLOOR PLAN
P1.3 PLUMBING - PARTIAL 1ST FLOOR PLAN
P1.4 PLUMBING - PARTIAL 1ST FLOOR PLAN
P2.1 PLUMBING - PARTIAL 2ND FLOOR PLAN
P2.2 PLUMBING - PARTIAL 2ND FLOOR PLAN
P2.3 PLUMBING - PARTIAL 2ND FLOOR PLAN
P2.4 PLUMBING - PARTIAL 2ND FLOOR PLAN
P3.1 PLUMBING - PARTIAL ATTIC PLAN
P3.2 PLUMBING - PARTIAL ATTIC PLAN
P5.1 PLUMBING - DETAILS
P5.2 PLUMBING - DETAILS

ELECTRICAL DRAWINGS
E0.01 NOTES, SYMBOLS & LIGHTING SCHEDULE
E0.02 ELECTRICAL SITE PLAN
E0.03 LIGHTING TITLE 24 CALCULATIONS, DETAILS
E2.11 FIRST FLOOR-WEST POWER/SIGNAL PLAN
E2.12 FIRST FLOOR - EAST POWER/SIGNAL PLAN
E2.21 SECOND FLOOR - WEST POWER/SIGNAL PLAN
E2.22 SECOND FLOOR - EAST POWER/SIGNAL PLAN
E2.31 FIRST FLOOR - WEST LIGHTING PLAN
E2.32 FIRST FLOOR - EAST LIGHTING PLAN
E2.41 SECOND FLOOR - WEST LIGHTING PLAN
E2.42 SECOND FLOOR - EAST LIGHTING PLAN
E2.51 ATTIC LIGHTING AND POWER/SIGNAL PLAN, WEST
E2.52 ATTIC LIGHTING AND POWER/SIGNAL PLAN, EAST
E3.01 ONE LINE DIAGRAMS
E3.02 PANEL SCHEDULES WEST
E3.03 PANEL SCHEDULES EAST
E4.01 ELECTRICAL DETAILS
CP-E5.10 CENTRAL PLANT POWER/SIGNAL PLAN
CP-E5.20 CENTRAL PLANT PLAN LIGHTING
CP-E5.30 CENTRAL PLANT ONE LINE AND PANEL SCHEDULES

FIRE ALARM DRAWINGS
FA0.01 FIRE ALARM LEGEND GENERAL NOTES
FA0.02 FIRE ALARM DETAILS RISER DIAGRAM BUILDINGS 6 & 7
FA0.03 FIRE ALARM SYSTEM CALCULATIONS
FA0.04 FIRE ALARM SITE PLAN
FA2.11 FIRST FLOOR - WEST FIRE ALARM PLAN
FA2.12 FIRST FLOOR - EAST FIRE ALARM PLAN
FA2.21 SECOND FLOOR - WEST FIRE ALARM PLAN
FA2.22 SECOND FLOOR - EAST FIRE ALARM PLAN
FA2.31 ATTIC FIRE ALARM PLAN
FACP.41 CENTRAL PLANT PLAN FIRE ALARM DETAILS, RISER

LABORATORY FIXTURE DRAWINGS
LF-1.1 GENERAL NOTES, SCHEDULE AND SYMBOL LIST
LF-1.2 LAN CASEWORK MENU
LF-1.3 LAB ELEVATIONS
LF-1.4 LAB ELEVATIONS/ISOMETRICS
LF-2.1 LAB PARTIAL 2ND FLOOR PLAN
LF-2.2 LAB PARTIAL 2ND FLOOR PLAN
LF-2.3 LAB PARTIAL 2ND FLOOR PLAN
LF-3.1 LAB DETAILS FURNISHINGS
LF-3.2 LAB DETAILS FURNISHINGS
LF-3.3 LAB DETAILS FURNISHINGS
LF-3.4 LAB DETAILS FURNISHINGS
LF-3.5 LAB FITTINGS DETAILS
LP-1.1 LAB PLUMBING NOTES, LEGEND SCHEDULES
LP-2.1 LAB PLUMBING PARTIAL 2ND FLOOR PLAN
LP-2.2 LAB PLUMBING PARTIAL 2ND FLOOR PLAN
LP-2.3 LAB PLUMBING PARTIAL 2ND FLOOR PLAN
LP-3.1 LAB PLUMBING DETAILS
LP-3.2 LAB PLUMBING DETAILS
LP-3.3 LAB PLUMBING DETAILS
LE-1.0 LABORATORY ELECTRICAL - GENERAL INFO.
LE-1.1 LABORATORY ELECTRICAL POWER DISTRIBUTION DETAILS
LE-2.1 LABORATORY OVER-ALL ELECTRICAL PLAN
LE-2.2 LABORATORY ELECTRICAL - PARTIAL ELECTRICAL PLAN
LE-2.3 LABORATORY ELECTRICAL - PARTURAL ELECTRICAL PLAN
LE-3.0 LABORATORY ELECTRICAL PANEL SCHEDULES

TELECOMMUNICATION DRAWINGS
T0.0.0 DRAWING INDEX, GENERAL NOTES, SITE PLAN, ABBREVIATIONS, LEGEND& SYMBOLS
T1.1.0 KEY PLAN FOR FIRST AND SECOND FLOORS
T2.1.1 TELECOM OUTLETS - FIRST FLOOR PLAN (SOUTH)
T2.1.2 TELECOM OUTLETS - FIRST FLOOR PLAN (NORTH)
T2.2.1 TELECOM OUTLETS - SECOND FLOOR PLAN (SOUTH)
T2.2.2 TELECOM OUTLETS - SECOND FLOOR PLAN (NORTH)
T3.1.1 FIRST FLOOR ENLARGED PLANS - IDF 105
T3.1.2 FIRST FLOOR ENLARGED PLANS - IDF 184
T3.1.3 FIRST FLOOR ENLARGED PLANS - MDF 180
T3.2.1 SECOND FLOOR ENLARGED PLANS - IDF 202
T3.2.2 SECOND FLOOR ENLARGED PLANS - IDF 233
T4.1.1 MDF ROOM 180 ELEVATIONS
T4.2.1 IDF ROOMS EQUIPMENT RACK ELEVATIONS
T4.3.1 IDF ROOMS - 110-BLOCK FIELD ELEVATIONS
T5.1.1 INTRA BUILDING BACKBONE CABLING DIAGRAM
T6.0.1 TELECOM OUTLET DETAILS
T6.1.1 TELECOM CABLE TERMINATION & LABELING DETAILS
T6.2.1 TELECOM CABLE RUNWAY DETAILS
T6.3.1 TELECOM RACKS, CABINETS & DUAL CHANNEL SUPPORT DETAILS
T6.4.1 TELECOM GROUNDING AND FIRESTOPPING DETAILS
T10.2.1 CP CENTRAL UTILITY PLANT (CUP) BUILDING TELECOM OUTLETS & TELECOM ROOM ENLARGED PLAN

Important Bidding Note:
A single bid is required which must include all information from both sets of the following documents:
- Site Improvements Drawings and Specs (DSA application No. 01-106062)
- Educational Buildings and Central Plant Drawings and Specs (DSA application No. 01-105719)

PROJECT DESCRIPTION

THIS IS A NEW COMMUNITY COLLEGE PROJECT THAT IS TO BE CONSTRUCTED ON AN UNDEVELOPED, 73± ACRE SITE.

PROJECT CONSISTS OF TWO NEW EDUCATIONAL FACILITY BUILDINGS (EAST AND WEST BUILDINGS SEPARATED BY A TWO-HOUR FIRE RATED AREA SEPARATION WALL), MECHANICALLY SERVED BY A CENTRAL UTILITY BUILDING LOCATED ON THE WESTERN PORTION OF THE SITE.

ALL SITEWORK (TO WITHIN 5' OF THE BUILDINGS) IS TO BE CONSTRUCTED AS ONE MASTER SITE DEVELOPMENT PLAN WHICH ENCOMPASSES OTHER ADJACENT SITES OUTSIDE THE SCOPE OF THIS PROJECT. SITE RELATED INFO. IN THESE DOCUMENTS ARE PROVIDED FOR ACCESSIBILITY REVIEW ONLY.

SITE DESIGN IS DOCUMENTED UNDER SEPARATE DSA APPLICATION NO. 01-106062

AN AREA SUMMARY OF THIS PROJECT IS AS FOLLOWS:

EAST EDUCATIONAL BUILDING	39,864 SF
WEST EDUCATIONAL BUILDING	36,664 SF
CENTRAL PLANT	3,132 SF
TOTAL BUILDING AREA:	79,660 SF

CODE REVIEW - EAST AND WEST EDUCATIONAL BUILDINGS

OCCUPANCY CLASSIFICATION:
MIXED: GROUP B - (HIGHER EDUCATION (304.1))
GROUP A-3 - (CLASSROOM (150) (303.1))

TYPE OF CONSTRUCTION:
TYPE II- 1HR, FULLY SPRINKLERED (603, TABLE 5-B, 505.3)

FIRE RESISTIVE SUBSTITUTION FOR AUTOMATIC SPRINKLER SYSTEM - APPLICABLE
AUTOMATIC SPRINKLER SYSTEM ARE USED TO SUBSTITUTE FOR ONE HOUR FIRE RESISTIVE CONSTRUCTION (508)

HEIGHT LIMITATIONS: (TABLE 5-B)
- MAXIMUM ALLOWABLE HEIGHT: 65'
  ACTUAL HEIGHT: 54'-9"
- MAXIMUM STORIES: 2 STORIES FOR A-3
  ACTUAL NO. OF STORIES: 2 STORIES

ALLOWABLE FLOOR AREA:

	B	A-3	
a. BASIC ALLOWABLE (TABLE 5-B)	18,000	13,500	
b. MULTI-STORY (2 x a) (504.2)	36,000	27,000	

ACTUAL FLOOR AREA:

	B	A-3	
EAST EDUCATIONAL BUILDING:			
FIRST FLOOR	17,031	2,816	
SECOND FLOOR	14,324	5,693	
TOTAL	31,355 +	8,509	= 39,864
WEST EDUCATIONAL BUILDING:			
FIRST FLOOR	13,662	4,762	
SECOND FLOOR	13,366	4,874	
TOTAL	27,028 +	9,636	= 36,664

ALLOWABLE FLOOR AREA FOR MIXED OCCUPANCY: (504.3)
EAST EDUCATIONAL BUILDING:
AREA RATIO IS OK: (31,504 / 27,000 = 3(<1) AND (31,355 / 36,000 = 087 < 1)
WEST EDUCATIONAL BUILDING:
AREA RATIO IS OK: (9,636 / 35,100 + 27,028 / 46,800 = 0.85 < 1)

OCCUPANCY SEPARATIONS: (TABLE 3-B)
A-3/B NO REQUIRED OCCUPANCY SEPARATION

LABORATORIES AND SIMILAR AREAS CONTAINING HAZARDOUS MATERIALS SHALL BE SEPARATED FROM EACH OTHER AND OTHER PORTIONS OF THE BUILDING BY NOT LESS THAN A ONE- HOUR FIRE- RESISTIVE OCCUPANCY SEPARATION. ALL OPENINGS IN SUCH SEPARATION SHALL BE PROTECTED BY A FIRE ASSEMBLY HAVING A ONE- HOUR FIRE- PROTECTION RATING. (304.2.2.1)

FIRE-RESISTIVE REQUIREMENTS: (TABLES 5-A & 6-A)

	EXTERIOR BEARING WALLS	EXTERIOR NON-BEARING WALLS	OPENINGS
A-3	N/A TO DESIGN	2-HR/ NON-COMBUSTIBLE < 5' 1-HR/ NON-COMBUSTIBLE 5' TO 40' NR/ NON-COMBUSTIBLE > 40'	NOT PERMITTED < 5' 3/4-HR PROTECTION < 10'
B	N/A TO DESIGN	1-HR/ NON-COMBUSTIBLE NR/ NON-COMBUSTIBLE > 40'	NOT PERMITTED < 5' 3/4-HR PROTECTION < 10'

OCCUPANY LOADS
(SEE SHEET T.2 AND T.3)

FIRE-RESISTIVE RATINGS: (TABLES 6-A)

BUILDING ELEMENT	BEFORE SUBSTITUTION	AFTER SUBSTITUTION
NON-BEARING WALLS	1-HR	NR (SEC. 603.3.1)
STRUCTURAL FRAME	1-HR	NR
PERMANENT PARTITIONS (FIRE RETARDANT TREATED WOOD- PERMITTED)	1-HR	NR (SEC.601.5.2.1.1)
SHAFT ENCLOSURES	1-HR	NR
FLOOR AND FLOOR- CEILING	1-HR	NR
ROOF AND ROOF- CEILING	1-HR	NR
STAIRWAY CONSTRUCTION	NON-COMBUSTIBLE CONSTRUCTION	NON-COMBUSTIBLE CONSTRUCTION(603.4 & CH. 10)

MEANS OF EGRESS: (1003 & 1007)
- OCCUPANT LOAD (TABLE 10-A)
- EXIT DOOR WIDTH REQUIRED 1003.3.1.3, TABLE 10-B
- EXIT STAIR WIDTH REQUIRED 1003.3.3.2, TABLE 10-B
- EXIT REQUIRED 1004.2.3.4, TABLE 10-A
- LABORATORIES IN EXCESS OF 200 SF SHALL HAVE ACCESS TO AT LEAST TWO EXITS OR EXIT ACCESS DOOR FROM THE ROOM (304.2.2.1)

EXIT ACCESS: (1004)
- SEPARATION OF EXITS OR EXIT ACCESS DORWAYS: (1004.2.4)
- TRAVEL DISTANCE: 250', SPRINKLERED BUILDING (1004.2.5.2.2) LABORATORIES: ALL PORTIONS OF THE ROOM SHALL BE WITHIN 75' OF AN EXIT OR EXIT ACCESS DOOR (304.2.2.1)
- CORRIDORS:
  STRUCTURE- 1-HR (1004.3.4.3.1)
  DOORS- 20 MIN. SELF CLOSING OR AUTOMATIC CLOSING (1004.3.4.3.2.1)
  WINDOWS- 45 MIN. WINDOW AREA 25% OF WALL AREA (1004.3.4.3.2.2)
  DUCT OPENING- DAMPERS (1004.3.4.3.2.3)

PEDESTRIAN WALKWAY:
- PEDESTRIAN WALKWAY DEFINED. (SECTION 217-P)
- PEDESTRIAN WALKWAY AS A MEANS OF HORIZONTAL EXIT- (1014.1) EXCEPTION. PEDESTRIAN WALKWAYS CONFORMING TO THE REQUIREMENTS OF HORIZONTAL EXIT MAY BE USED AS A REQUIRED MEANS OF EGRESS.

ELEVATORS: (1108B)
- IN NEW CONSTRUCTION OF BUILDINGS AND ONLY WHERE ELEVATORS ARE REQUIRED, PURSUANT TO SECTION 1108B1, AND WHICH EXCEEDS 10,000 SF OF ANY FLOOR, AN ACCESSIBLE MEANS OF VERTICAL ACCESS VIA RAMP, ELEVATOR OR LIFT SHALL BE PROVIDED WITHIN 200' OF TRAVEL OF EACH STAIRS AND EACH ESCALATOR.

ROOF CLASS: (1304.2.2.1 & TABLE 15A)
- A-3 OCCUPANCY - CLASS B
- B OCCUPANCY - CLASS B

GASES IN GROUP B OCCUPANCIES: (410)
- 1-HR SEPARATION

FLAMMABLE AND COMBUSTIBLE LIQUIDS (410)
- 1-HR SEPARATION

HAZARDOUS MATERIALS
- ARTICLE 80 OF THE CALIFORNIA FIRE CODE
- MAXIMUM AMOUNT OF TOXIC AND FLAMMABLE GASES (TABLE 3-D)

CODE REVIEW - CENTRAL PLANT BUILDING

OCCUPANCY CLASSIFICATION:
MIXED: GROUP F-1 - INDUSTRIAL OCCUPANCY (MACHINERY) (306.1)
GROUP B - OF

ABBREVIATIONS

&	AND
∠	ANGLE
@	AT
℄	CENTERLINE
⌀	DIAMETER OR ROUND
#	NUMBER
AB	ANCHOR BOLT
AC	ASPHALTIC CONCRETE
ACT	ACOUSTICAL TILE
ACOUS	ACOUSTICAL
AD	AREA DRAIN
ADH	ADHESIVE
ADJ	ADJACENT
AFF	ABOVE FINISH FLOOR
AFP	ACCORDIAN FOLDING PARTITION
AGGR	AGGREGATE
ALT	ALTERNATE
ALUM	ALUMINUM
AMP	AMPERE
ANOD	ANODIZED
APPROX	APPROXIMATELY
ARCH	ARCHITECT
ASB	ASBESTOS
ASSY	ASSEMBLY
BAT	BATTERY
BBD	BULLETIN BOARD
BD	BOARD
BLDG	BUILDING
BLKG	BLOCKING
BLO	BLOWER
BLR	BOILER
BLW	BELOW
BM	BEAM
BO	BOTTOM OF
BRKR	BREAKER
BTU	BRITISH THERMAL UNIT
BUR	BUILT UP ROOF
CAB	CABINET
CARP	CARPET
CAT	CATALOG
CB	CATCH BASIN
CEM	CEMENT
CF	CURB FACE
CFM	CUBIC FEET PER MINUTE
CHBD	CHALKBOARD
CHEM	CHEMICAL
CHWR	CHILLED WATER RETURN
CHWS	CHILLED WATER SUPPLY
CI	CAST IRON
CIR	CIRCLE
CJ	CONTROL JOINT
CL	CENTERLINE
CLG	CEILING
CLO	CLOSET
CLRM	CLASSROOM
CMT	CERAMIC MOSAIC TILE
CMU	CONCRETE MASONRY UNIT
CND	CONDUIT
CO	CLEANOUT
COL	COLUMN
COMM	COMMUNICATION
COMP	COMPOSITION
CONC	CONCRETE
CONF	CONFERENCE
CONN	CONNECTION
CONT	CONTINUOUS
CONTR	CONTRACTOR
COORD	COORDINATE
CORR	CORRIDOR
COV	COVER
CP	CONTROL PANEL
CR	CONDENSATE RETURN
CSWK	CASEWORK
CT	CERAMIC TILE
CTV	CABLE TELEVISION
CW	COLD WATER
DBL	DOUBLE
DEMO	DEMOLITION
DEPT	DEPARTMENT
DET	DETAIL
DF	DRINKING FOUNTAIN
DIA	DIAMETER
DIM	DIMENSION
DISP.	DISPENSER
DIST.	DISTANCE
DIV.	DIVISION
DL.	DEAD LOAD
DN.	DOWN
DS.	DOWN SPOUT
DWG.	DRAWING
EA.	EACH
EL	EASEMENT LINE
E.J.	EXPANSION JOINT
ELEC.	ELECTRICAL
ELEV.	ELEVATION
EMER.	EMERGENCY
ENCL.	ENCLOSURE
ENG	ENGINEER
ENGY	ENERGY
ENTR	ENTRANCE
EP	EPOXY ENAMEL
EPG	EPOXY PAINT GLOSS
EPSG	EPOXY PAINT SEMI-GLOSS
EQ.	EQUAL
EQUIP.	EQUIPMENT
EST.	ESTIMATE
EWC.	ELECTRIC WATER COOLER
EWH	ELECTRIC WATER HEATER
EXH	EXHAUST
EXIST.	EXISTING
EXP.	EXPANSION
EXT.	EXTERIOR
F	FACTORY FINISH
F.A.	FIRE ALARM
FC	FOOTCANDLE
F.D.	FLOOR DRAIN
FDC	FIRE DEPARTMENT CONNECTION
FDN	FOUNDATION
F.E.	FIRE EXTINGUISHER
F.E.C.	FIRE EXTINGUISHER CABINET
FFP	FOLDING FABRIC PARTITION
F.H.	FIRE HYDRANT
FIN.	FINISH
FLASH.	FLASHING
FLR.	FLOOR
FLUOR.	FLUORESCENT
F.O.	FACE OF
FPP	FOLDING PANEL PARTITION
FPW	FOLDING PANEL WOOD DOOR
F.R.A.	FIRE RATED ASSEMBLY
F.R.P.	FIBERGLASS REINFORCED PANEL
F.S.	FLOOR SINK
FT.	FOOT OR FEET
FTG.	FOOTING
FURR.	FURRING
FXTR	FIXTURE
GA.	GAGE
GALV.	GALVANIZED
GB	GRAB BAR
GL.	GLASS
GLULAM	GLUE LAMINATED
GND.	GROUND
GPM	GALLONS PER MINUTE
GR.	GRADE
GYP.	GYPSUM
HB.	HOSE BIB
HCN	HOLLOW CORE NATURAL FINISH
HCP	HOLLOW CORE PAINT FINISH
HDBD.	HARDBOARD
HDR	HEADER
HDW.	HARDWARE
HDWD.	HARDWOOD
HGT.	HEIGHT
H.M.	HOLLOW METAL
HORIZ.	HORIZONTAL
HP	HORSEPOWER
HR.	HOUR
HSTAT	HUMIDISTAT
HTG.	HEATING
HTWR	HOT WATER RETURN
HTWS	HOT WATER SUPPLY
HVAC	HEATING, VENTILATING, AIR CONDITIONING
HVY	HEAVY
HW	HOT WATER
I.D.	INSIDE DIAMETER
INSUL.	INSULATION
INT.	INTERIOR
INV.	INVERT
IW	IRRIGATION WATER
JAN.	JANITOR
JCT.	JUNCTION
JT.	JOINT
K	KIP (1000 LB)
KIT.	KITCHEN
KO	KNOCKOUT
KVA	KILOVOLT AMPERE
LAB.	LABORATORY
LAV.	LAVATORY
LB.	POUND
LDG	LANDING
LL	LIVE LOAD
LT	LIGHT
LTG	LIGHTING
LVL	LEVEL
LVR	LOUVER
M	METER
MAINT	MAINTENANCE
MAN	MANUAL
MAS	MASONRY
MATL.	MATERIAL
MAX.	MAXIMUM
MC.	MEDICINE CABINET
MCC	MOTOR CONTROL CENTER
MECH.	MECHANICAL
MED	MEDIUM
MEZZ	MEZZANINE
MFR.	MANUFACTURER
MH	MANHOLE
MIN.	MINIMUM
MIR	MIRROR
MISC.	MISCELLANEOUS
MKR	MARKER
MTL.	METAL
MTD.	MOUNTED
MUL.	MULLION
MVBL	MOVABLE
N.	NORTH
NAT.	NATURAL
NEG	NEGATIVE
N.I.C.	NOT IN CONTRACT
NO.	NUMBER
NOM.	NOMINAL
N.T.S.	NOT TO SCALE
O.A.	OVERALL
OBS.	OBSCURE
O.C.	ON CENTER
O.D.	OUTSIDE DIAMETER
O.F.	OVERFLOW DRAIN
OFCI	OWNER FURNISHED-CONTRACTOR INSTALLED
OFF	OFFICE
OFOI	OWNER FURNISHED-OWNER INSTALLED
OPNG.	OPENING
OPP.	OPPOSITE
OVHD	OVERHEAD
PART.	PARTITION
PB	PULL BOX
PBD	PARTICLEBOARD
PC	PORTLAND CEMENT
PERF	PERFORATED
PERP	PERPENDICULAR
PE	PAINT EGGSHELL
PF	PAINT FLAT
PG	PAINT GLOSS
PH	PHASE
PIV	POST INDICATOR VALVE
P.L.	PROPERTY LINE
PLAS.	PLASTER
PLAT.	PLATFORM
PLBG	PLUMBING
PLF	POUNDS PER LINEAR FOOT
PLYWD.	PLYWOOD
PNL	PANEL
POS	POSITIVE
PP	PORTABLE PARTITION
PR.	PAIR
PREFAB	PREFABRICATED
PREFIN	PREFINISHED
PRELIM	PRELIMINARY
PROJ	PROJECT
PSF	POUNDS PER SQUARE FOOT
PSG	PAINT SEMI-GLOSS
PSI	POUNDS PER SQUARE INCH
PVC	POLYVINYL CHLORIDE
QT.	QUARRY TILE
QTY	QUANTITY
R.	THERMAL RESISTANCE
RAD.	RADIUS
R.D.	ROOF DRAIN
RDWD.	REDWOOD
REF.	REFERENCE
REFR.	REFRIGERATOR
REG.	REGISTER
REINF.	REINFORCING
REQD.	REQUIRED
RESIL.	RESILIENT
RET	RETURN
REV.	REVERSE
RFG	ROOFING
RM.	ROOM
R.O.	ROUGH OPENING
S	SEALER
S.B.	SPLASH BLOCK
S.C.	SOLID CORE
SCN	SOLID CORE
S.C.	SOLID CORE
SCHED.	SCHEDULE
S.C.	SOLID CORE
S.C.	SOLID CORE
S.D.	STORM DRAIN
SECT.	SECTION
SF	STAIN FINISH
SFL	STAIN FINISH W/ LACQUER
SFV	STAIN FINISH W/ VARNISH
SHT.	SHEET
SIM.	SIMILAR
SPEC.	SPECIFICATIONS
SPLY	SUPPLY
SQ.	SQUARE
SR	STEAM RETURN
SS	STEAM SUPPLY
S.SK.	SERVICE SINK
SST.	STAINLESS STEEL
ST	STREET
STAG	STAGGERED
STC	SOUND TRANSMISSION CLASS
STD.	STANDARD
STL.	STEEL
STM	STEAM
STOR	STORAGE
STRUCT.	STRUCTURAL
SURF	SURFACE
SUSP.	SUSPENDED
SWBD	SWITCHBOARD
SWGR	SWITCHGEAR
SWR	SEWER
SYM.	SYMBOL
SYS	SYSTEM
T.	THERMOSTAT
T. & B.	TOP AND BOTTOM
T. & G.	TONGUE AND GROOVE
TD	TRENCH DRAIN
TECH	TECHNICAL
TEL.	TELEPHONE
TEMP.	TEMPERATURE
THK	THICK
THRES.	THRESHOLD
THRU	THROUGH
TKBD	TACKBOARD
T.O.	TOP OF
TOT	TOTAL
TR.	TREAD
TRNSF.	TRANSFORMER
TYP.	TYPICAL
U	HEAT TRANSFER COEFFICIENT
UGND	UNDERGROUND
UNFIN.	UNFINISHED
U.N.O.	UNLESS NOTED OTHERWISE
UPG	URETHANE PAINT GLOSS
UPSG	URETHANE PAINT SEMI-GLOSS
UR.	URINAL
UTIL	UTILITY
V	VOLT
VAC	VACUUM
VAV	VARIABLE AIR VOLUME
V.C.T.	VINYL COMPOSITION TILE
VERT.	VERTICAL
VEST.	VESTIBULE
W	WATT
W/	WITH
W.C.	WATER CLOSET
WD.	WOOD
WDW.	WINDOW
WHSE	WAREHOUSE
WL	WIND LOAD
WLD	WELDED
W.O.	WHERE OCCURS
WP	WORKING POINT
WPG	WATERPROOFING
WR	WATER RESISTANT
WSCT.	WAINSCOT
WT	WEIGHT
WWF.	WELDED WIRE FABRIC
XFMR	TRANSFORMER

MATERIAL SYMBOLS

EARTH		PLYWOOD		RIGID INSULATION	
SAND & GROUT		FINISH WOOD		ACOUSTICAL CEILING PANEL/ TILE	
CONCRETE		LATH & PLASTER			
MASONRY		GYPSUM BOARD			
STEEL		BATT INSULATION			

REFERENCE SYMBOLS

FULL BUILDING SECTION
A / A-4 — LETTER ABOVE - SECTION; NUMBER BELOW - SHEET NUMBER

PARTIAL BUILDING SECTION / WALL SECTION
B / A-4 — LETTER ABOVE - SECTION; NUMBER BELOW - SHEET NUMBER

EXTERIOR ELEVATION
1 / A-3 — NUMBER ABOVE - ELEVATION NUMBER; NUMBER BELOW - SHEET NUMBER

DETAIL
2 / 9.01 — NUMBER ABOVE - DETAIL NUMBER; NUMBER BELOW - SHEET NUMBER

ROOM IDENTIFICATION WITH INTERIOR ELEVATION REFERENCES
101 / 2 / A-5 — NUMBER ABOVE - ROOM NUMBER; INTERIOR ELEVATION - (REFERENCE ONLY THOSE DRAWN); NUMBER BELOW - SHEET NUMBER

INTERIOR ELEVATION IDENTIFICATION
101 / 2 — NUMBER ABOVE - ROOM NUMBER; INTERIOR ELEVATION REFERENCE

DOOR NUMBER IDENTIFICATION
101 — DOOR NUMBER - REFER TO DOOR SCHEDULE

WINDOW TYPE IDENTIFICATION
A — WINDOW TYPE - REFER TO WINDOW SCHEDULE

CASEWORK IDENTIFICATION
CASE HEIGHT 34 / CASE LENGTH 36 — 24 CASE DEPTH; 202 M.I.G. MODEL NUMBER; L LOCKABLE - IF REQUIRED

TOILET ACCESSORY IDENTIFICATION
2 — TOILET ROOM ACCESSORY NUMBER

KEYNOTE REFERENCE
3 — KEYNOTE REFERENCE NUMBER

COLOR REFERENCE
CT-1 — COLOR REFERENCE - REFER TO COLOR SCHEDULE

PARTITION TYPE REFERENCE
A — WALL TYPE (SEE SHEET 4.02)

EXTERIOR WALL ASSEMBLY REFERENCE
A — WALL TYPE (SEE 9/9.01)

HORIZONTAL ASSEMBLY REFERENCE
A — ASSEMBLY TYPE (SEE 18/9.01)

RE-ASSIGNMENT REFERENCED TO RUDY HAAS 1/20/00

tBP/Architecture
1000 Burnett Ave, Suite 140
Concord, CA 94520
ph: 925.246.6419 fx: 925.246.6495

architect

consultant

REVIEWED FOR CODE COMPLIANCE
DSA APPROVED
APPLICATION STAMP
PM: CHRISTOPHER LOVETT
OFFICE OF REGULATION SERVICES
APPL NO.: 10D719
ACCESS COMPLIES
DATE: 11/5/2003

agency

SAN RAMON VALLEY CENTER

CONTRA COSTA COMMUNITY COLLEGE DISTRICT

SAN RAMON, CALIFORNIA

owner

tBP project number : 20212.00
file name: OT-1B.dwg
drawn by: P.V. checked by:
date: 03-09-04 plot scale: 1:1

Rev.	date:	description:

drawing title: building no.: 6 & 7

GEN. NOTES/ ABBREV./ & DRAFTING SYMBOLS

drawing no.:

T.1B

drawing of

LEGEND

ROOM NAME

CLASSROOM	
A-3	1514 SF
20	76
MIN 2 EXITS REQ'D	

OCCUPANCY TYPE — ROOM AREA (SQUARE FT)
OCCUPANCY LOAD — MAXIMUM OCCUPANTS (ROOM AREA DIVIDED BY OCCUPANCY LOAD)
EXIT REQUIREMENTS

OCCUPANTS AT EXIT — 37.8 — EXIT DIRECTION

RATED WALL LEGEND

= 1-HOUR FIRE RATED SHAFT WALL
= 1-HOUR FIRE RATED EXIT COURT WALL (PROTECTED TO UNDERSIDE OF STRUCTURE)
= 1-HOUR FIRE RATED CORRIDOR
= 2-HOUR FIRE RATED AREA SEPARATION
= 1-HOUR FIRE RATED WALL

OCCUPANCY TYPE DELINEATION:

= GROUP A-3

WEST EDUCATIONAL BUILDING
EAST EDUCATIONAL BUILDING

LOBBY	
B	378 SF
100	6

EXEC. DEAN	
B	174 SF
100	2

DIV. DEAN	
B	124 SF
100	2

BUSINESS MANAGER	
B	128 SF
100	2

ADMIN OFFICE	
B	128 SF
100	2

ELECTRICAL	
	84 SF

WOMENS SERV.	
B	112 SF
100	2

OFFICE	
B	129 SF
100	2

OFFICE	
B	133 SF
100	2

OFFICE	
B	120 SF
100	2

CONFERENCE	
B	361 SF
15	25

OFFICE	
B	130 SF
100	2

PART TIME FACILITY	
B	286 SF
100	3

STUDY	
B	109 SF
100	2

STUDY	
B	112 SF
100	2

CAREER TRANSFER CENTER	
A-3	1128 SF
15	15
MIN 2 EXITS REQ'D	

ASSESSMENT	
B	595 SF
20	30

STORAGE	
B	145 SF
300	1

STORAGE	
B	217 SF
300	1

COMPUTER LAB	
B	1330 SF
20	67

TECHNOLOGY OFFICE	
B	361 SF
100	4

COMPUTER LAB	
B	906 SF
20	46

COMPUTER LAB	
B	845 SF
20	43

BUSINESS LAB	
B	922 SF
20	46

SUPPORT ROOM	
B	80 SF
100	1

ART STUDIO	
A	1173 SF
20	58
MIN 2 EXITS REQ'D	

STORAGE	
	46 SF

DRYING ROOM	
B	146 SF
50	3

GLAZING ROOM	
B	116 SF
50	3

CERAMIC STUDIO	
A-3	1424 SF
20	72
MIN 2 EXITS REQ'D	

ELECTRICAL ROOM	
	136 SF

MACHINE ROOM	
	67 SF

LANGUAGE LAB	
B	761 SF
20	34
1	

STORAGE	
B	210 SF
300	1

LANGUAGE LAB	
B	871 SF
20	44
1	

MECHANICAL EQUIPMENT	
B	473 SF
300	2
1	

CASH	
B	46 SF
100	1

MACHINE ROOM	
	48 SF

IDF	
	140 SF
1	

STORAGE	
B	284 SF
300	1

STORAGE	
	165 SF

PHYSICAL ED.	
B	1404 SF
50	28

ENGINEERING LAB	
B	761 SF
20	34

TECHNOLOGY OFFICE	
B	442 SF
100	5

ENGINEERING LAB	
B	753 SF
20	38

LOCKERS	
B	178 SF
50	4
1	

LOCKERS	
B	178 SF
50	4
1	

MDF	
B	245 SF
300	1

WORK ROOM	
B	266 SF
100	3

OFFICE	
B	133 SF
100	2

FACULTY LOUNGE	
B	233 SF
15	16

OFFICE	
B	114 SF
100	2

WORK AREA	
B	90 SF
100	1

STORAGE	
B	206 SF
300	1

AV ROOM	
B	748 SF
50	16

STUDY #2	
B	114 SF
50	3

OFFICE	
B	133 SF
100	2

ADMISSIONS AND REGISTRATION	
A-3	1241 SF
15	83
MIN 2 EXITS REQ'D	

OPEN OFFICE	
B	670 SF
100	7

OFFICE	
B	123 SF
100	2

OFFICE	
B	121 SF
100	2

OFFICE	
B	117 SF
100	2

OFFICE	
B	116 SF
100	2

OFFICE	
B	117 SF
100	2

LIBRARY-STACKS	
B	1783 SF
100	16

LIBRARY-READING ROOM	
A	1665 SF
50	34

KEY PLAN

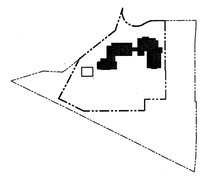

0 8' 16' 32' north

1ST FLOOR EXITING PLAN AND CODE ANALYSIS 1

SCALE: 1/16" = 1'-0"

tBP architecture planning interiors management

tBP/Architecture
1000 Burnett Ave, Suite 140
Concord, CA 94520
ph: 925.246.6419 fx: 925.246.6495

LICENSED ARCHITECT — RENEWAL 08/31/2011 — NO. C-9486 — STATE OF CALIFORNIA

architect

consultant

DSA/OPINION STAMP
DIV. OF THE STATE ARCHITECT
OFFICE OF REGULATION SERVICES
APPL. NO. 10K-219
DATE 4-25-03

agency

SAN RAMON VALLEY CENTER

CONTRA COSTA COMMUNITY COLLEGE DISTRICT

SAN RAMON, CALIFORNIA

owner

tBP project number : 20212.00
file name: 01-2_1flr-code.dwg
drawn by: DM checked by:
date: 03-04-04 plot scale: 1:1

Rev:	date:	description:

drawing title: 1ST FLR EXITING PLAN & CODE ANALYSIS
building no:
drawing no: T.2
drawing of

CAD DRAWING FILE NOT TO BE USED FOR CONSTRUCTION

LEGEND

ROOM NAME
CLASSROOM
OCCUPANCY TYPE — A-3 | 1514 SF — ROOM AREA (SQUARE FT)
OCCUPANCY LOAD — 20 | 76 — MAXIMUM OCCUPANTS (ROOM AREA DIVIDED BY OCCUPANCY LOAD)
MIN 2 EXITS REQ'D
EXIT REQUIREMENTS

OCCUPANTS AT EXIT — 37.8 — EXIT DIRECTION

RATED WALL LEGEND

- = 1-HOUR FIRE RATED SHAFT WALL
- = 1-HOUR FIRE RATED EXIT COURT WALL (PROTECTED TO UNDERSIDE OF STRUCTURE)
- = 1-HOUR FIRE RATED CORRIDOR
- = 2-HOUR FIRE RATED AREA SEPARATION
- = 1-HOUR FIRE RATED WALL

OCCUPANCY TYPE DELINEATION:

= GROUP A-3

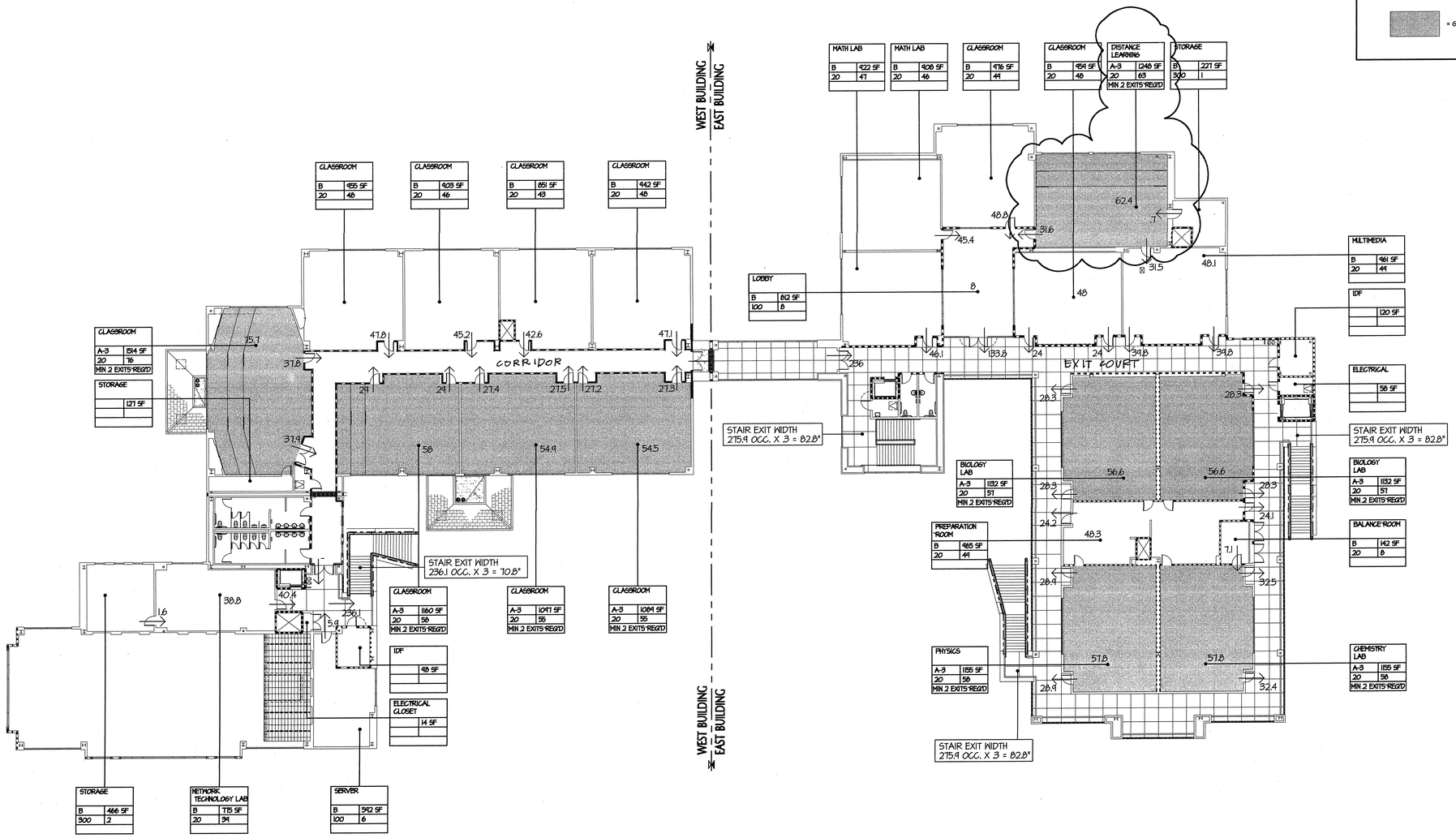

KEY PLAN

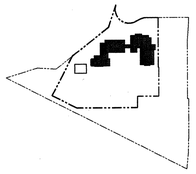

north

0 8' 16' 32'

2ND FLOOR EXITING PLAN AND CODE ANALYSIS

SCALE: 1/16" = 1'-0"

1

tBP
architecture
planning
interiors
management

tBP/Architecture
1000 Burnett Ave, Suite 140
Concord, CA 94520
ph: 925.246.6419 fx: 925.246.6495

architect

consultant

agency

owner

SAN RAMON VALLEY CENTER

CONTRA COSTA COMMUNITY COLLEGE DISTRICT

SAN RAMON, CALIFORNIA

tBP project number : 2021200

file name: OT-3_2flr-code.dwg

drawn by: DM checked by:

date: 03-09-04 plot scale: 1:1

Rev:	date:	description:

drawing title: building no.:

2ND FLR EXITING PLAN & CODE ANALYSIS

drawing no.:

T.3

drawing of

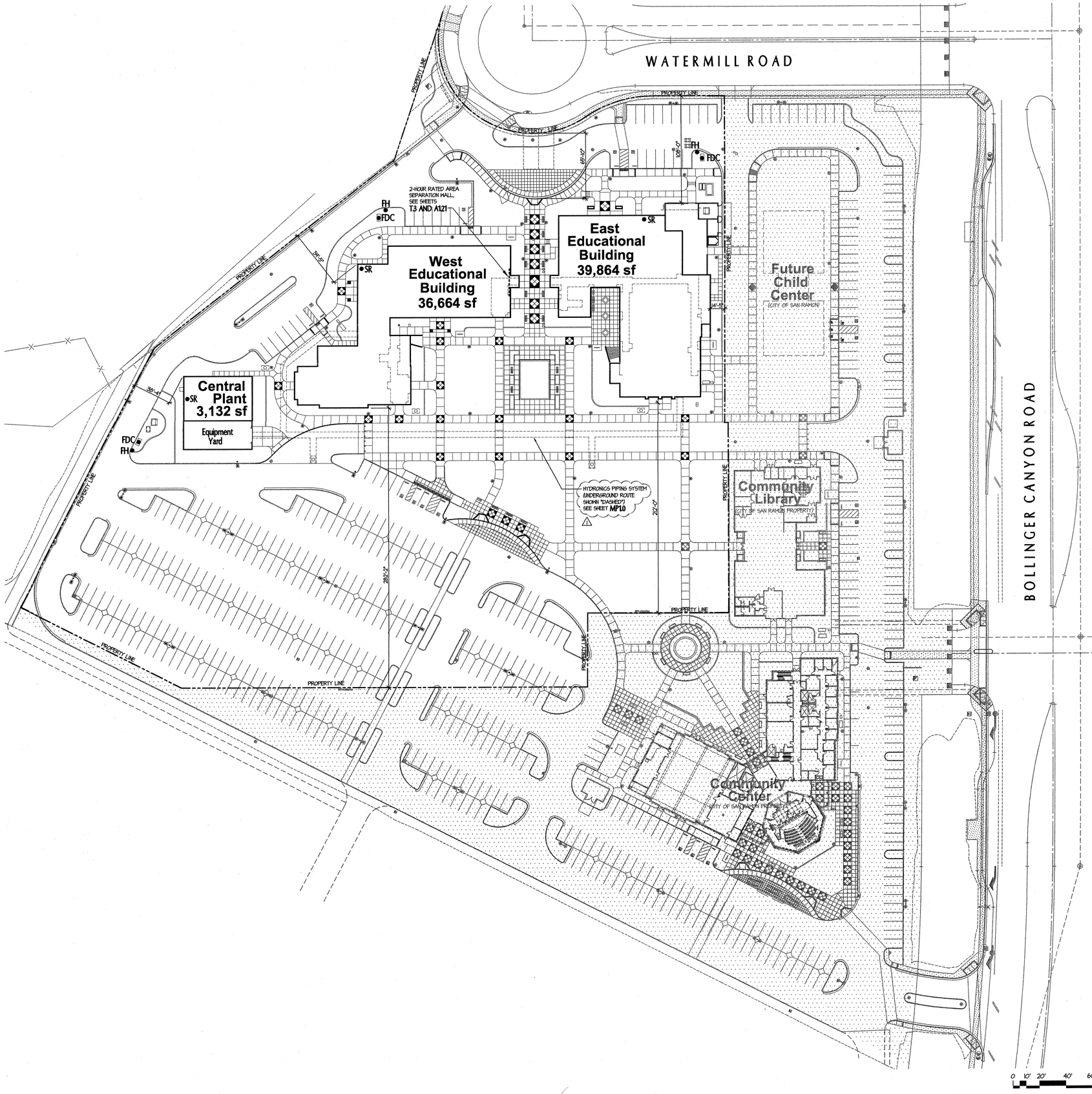

BUILDING LOCATION PLAN 1
SCALE: 1" = 40'-0"

GENERAL NOTES

1. LIMITS OF THIS PROJECT ARE DEFINED BY THE PROPOERTY LINES INDICATED.
2. THIS PROJECT HAS BEEN REVIEWED AND APPROVED ON 3/2/04 BY MICHAEL MENTINK, DEPUTY FIRE MARSHAL, SAN RAMON VALLEY FIRE PROTECTION DISTRICT. (925) 838-6686. FOR ADDITIONAL INFORMATION, REFER TO: **DOUGHERTY VALLEY VILLAGE CENTER IMPROVEMENT PLANS** PREPARED BY CARLSON BARBEE & GIBSON, INC. IN FEB., 2004

SITE SUMMARY

Site Area: 309,814 sf (7.11 ACRES)

Parking Provided:

STANDARD SPACES	273
ACCESSIBLE SPACES	8*
TOTAL SPACES	281

* (INCLUDES 2 VAN ACCESSIBLE SPACES)

Accessible Parking Requirements:

TOTAL PARKING IN LOT	REQUIRED ACCESSIBLE	INCLUDING VAN ACCESSIBLE
1-25	1	1
26-50	2	1
51-75	3	1
76-100	4	1
101-150	5	1
151-200	6	1
201-300	7	1
301-400	8	1
401-500	9	2
501-1,000	2%	(1 IN 8)

LEGEND

- FDC FIRE DEPARTMENT CONNECTION
- SR SPRINKLER RISER
- FH FIRE HYDRANT

tBP
architecture planning interiors management

tBP/Architecture
1000 Burnett Ave, Suite 140
Concord, CA 94520
ph: 925.246.6419 fx: 925.246.6495

architect

consultant

APPROVED
DEVELOPMENT STAMP
DIV. OF THE STATE ARCHITECT
OFFICE OF REGULATION SERVICES
APP. NO. 105719
AC 2004 FIS 03
DATE 6-9-04

agency

SAN RAMON VALLEY CENTER

CONTRA COSTA COMMUNITY COLLEGE DISTRICT

SAN RAMON, CALIFORNIA

owner

tBP project number : 20212.00

file name: OAS-1_site.dwg

drawn by: mM checked by:

date: 03-09-04 plot scale: 1:1

Rev:	date:	description:
1	03-29-04	DESIGN CLARIFICATIONS

drawing title: building no.:

BUILDING LOCATION PLAN

drawing no.:

AS.1

drawing of

GENERAL NOTES

1. FOR ADDITIONAL HORIZONTAL CONTROL INFORMATION NOT INDICATED HERE, SEE FLOOR PLANS, SHEETS **A1.11, A1.12, A1.21, AND A1.22**
2. ALL DIMENSIONS ON THESE "HORIZONTAL CONTROL" ARE TAKEN TO FACE OF CONCRETE UNLESS NOTED OTHERWISE.
3. THE PURPOSE OF THESE DRAWINGS IS TO ESTABLISH KEY HORIZONTAL CONTROL POINTS FOR CONCRETE WORK NECESSARY TO CONSTRUCT VERTICAL ELEMENTS REFERENCED IN THE FLOOR PLANS.
4. WHERE DIMENSIONS ARE OMITTED, REFER TO OTHER DRAWINGS IN THESE DOCUMENTS FOR ADDITIONAL INFORMATION.
4. FOR ADDITIONAL SLAB PENETRATION INFORMATION NOT SHOWN HERE, SEE **MECH, ELEC, PLUMB, AND LAB DRAWG'S.**
5. FOR TYPICAL LOCATION OF SECOND FLOOR SLAB EDGES AT CURTAIN WALLS, SEE DETAIL **14/3.01**

KEYNOTES (NOT ALL KEYNOTES APPLY TO ALL PLANS)

1 LINE OF CURTAIN WALL (SHOWN "DASHED" FOR CLARITY), SEE DETAIL **14/3.01**

2 EDGE OF SLAB

HORIZONTAL CONTROL PLAN LEGEND

- COMPLETE SLAB PENETRATION OR ELEVATOR PIT
- 2 1/2" SLAB DEPRESSION (FOR CERAMIC TILE FLOOR FINISH OR ACCESS FLOOR SYSTEM), SEE FLOOR PLANS FOR ADDITIONAL INFO.
- SLAB DEPRESSION FOR RECESSED FLOOR MATS, SEE DETAIL **15/9.50** FOR DEPTH, SEE FLOOR PLAN, SHEET **A0.11** FOR SIZE. ⚠
- 6" TALL CONCRETE LOCKER CURB, COORDINATE EXACT WIDTH W/ LOCKER MANFACTURER AND DETAIL **12/9.50**
- 6" TALL CONCRETE CURB, FOR CURB WIDTHS AND LOCATIONS OF OPENINGS WITHIN CURB, SEE **ARCH. FLOOR PLANS**
- BRACE FRAME, SEE **STRUCT. DWG'S.**
- INTERIOR PARTITION - FOR LOCATIONS, SEE **FLOOR PLANS** ⚠
- WALL DUCT LOCATIONS, PROVIDE BLOCKOUT IN SLAB AND/OR CURB AS INDICATED AND PER DETAIL **18/4.03** ⚠
- RWL — CAST IRON RAIN WATER LEADER CONNECTING TO STORM DRAIN SYSTEM, SEE DETAIL **1/A6.15 AND SITE IMPROVEMENT PLANS, (SHEETS AS.4A THRU AS.4D)** ⚠

KEY PLAN

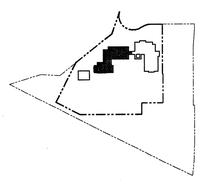

FIRST FLOOR HORIZONTAL CONTROL PLAN - WEST
SCALE: 1/8" = 1'-0"

1

tBP
architecture
planning
interiors
management

tBP/Architecture
1000 Burnett Ave, Suite 140
Concord, CA 94520
ph: 925.246.6419 fx: 925.246.6495

architect

consultant

APPROVED
DIV. OF THE STATE ARCHITECT
OFFICE OF REGULATION SERVICES
APPL NO. 100719
DATE: 6-9-04

agency

SAN RAMON VALLEY CENTER

CONTRA COSTA COMMUNITY COLLEGE DISTRICT

SAN RAMON, CALIFORNIA

owner

tBP project number : 20212.00
file name: A-011_1flr.dwg
drawn by: mM checked by:
date: 05-04-04 plot scale: 1:1

Rev:	date:	description:
⚠	08-24-04	DESIGN CLARIFICATIONS

drawing title: FIRST FLOOR - WEST HORIZONTAL CONTROL

building no:

drawing no: A0.11

drawing of

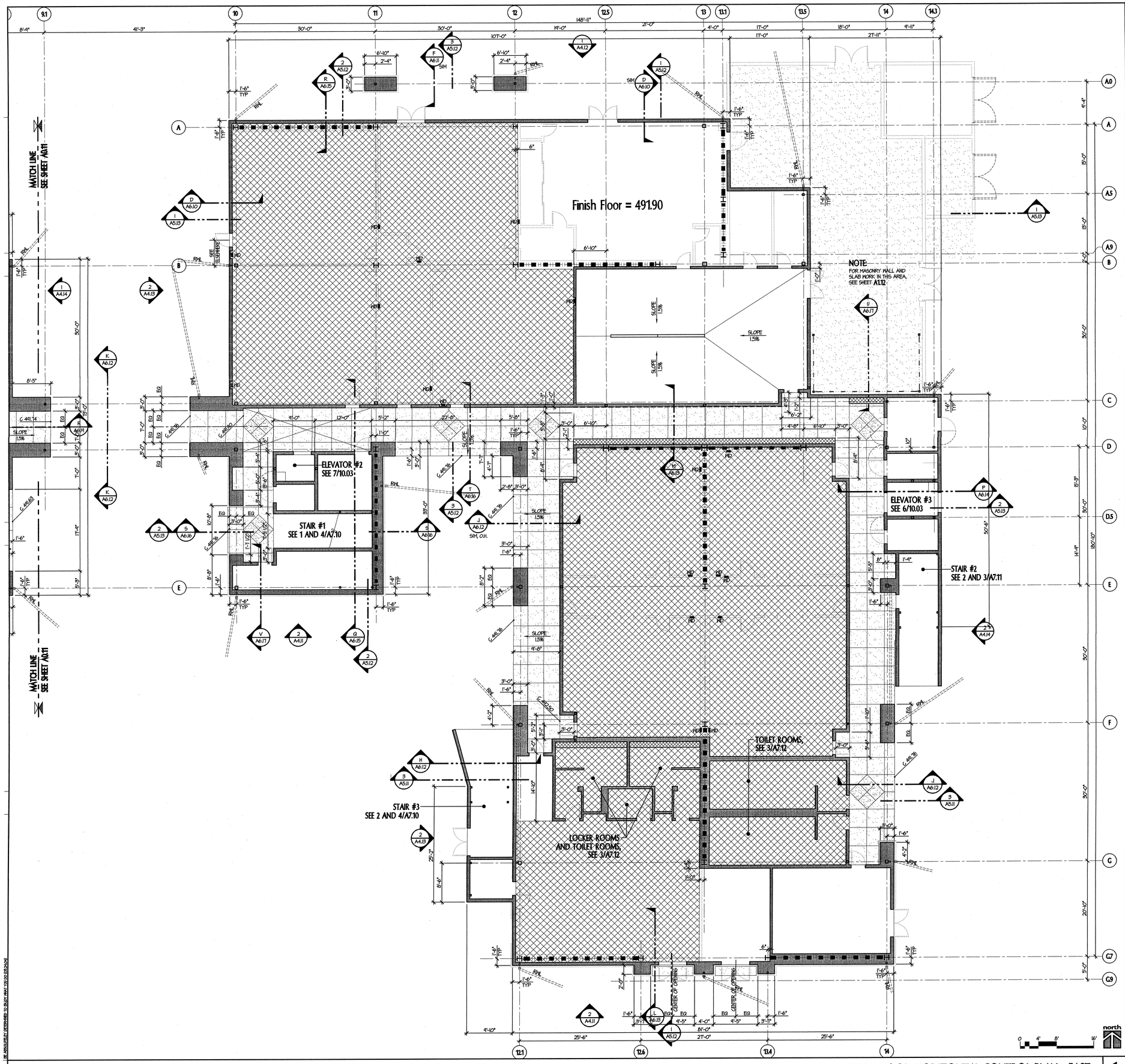

FIRST FLOOR HORIZONTAL CONTROL PLAN - EAST
SCALE: 1/8" = 1'-0"

1

GENERAL NOTES

1. FOR ADDITIONAL HORIZONTAL CONTROL INFORMATION NOT INDICATED HERE, SEE FLOOR PLANS, SHEETS **A1.11, A1.12, A1.21, AND A1.22**
2. ALL DIMENSIONS ON THESE "HORIZONTAL CONTROL" ARE TAKEN TO FACE OF CONCRETE UNLESS NOTED OTHERWISE.
3. THE PURPOSE OF THESE DRAWINGS IS TO ESTABLISH KEY HORIZONTAL CONTROL POINTS FOR CONCRETE WORK NECESSARY TO CONSTRUCT VERTICAL ELEMENTS REFERENCED IN THE FLOOR PLANS.
4. WHERE DIMENSIONS ARE OMITTED, REFER TO OTHER DRAWINGS IN THESE DOCUMENTS FOR ADDITIONAL INFORMATION.
4. FOR ADDITIONAL SLAB PENETRATION INFORMATION NOT SHOWN HERE, SEE **MECH., ELEC., PLUMB., AND LAB DRAWG'S.**
5. FOR TYPICAL LOCATION OF SECOND FLOOR SLAB EDGES AT CURTAIN WALLS, SEE DETAIL **14/3.01**

KEYNOTES (NOT ALL KEYNOTES APPLY TO ALL PLANS)

1. LINE OF CURTAIN WALL (SHOWN "DASHED" FOR CLARITY), SEE DETAIL **14/3.01**
2. EDGE OF SLAB

HORIZONTAL CONTROL PLAN LEGEND

- COMPLETE SLAB PENETRATION OR ELEVATOR PIT
- 2 1/2" SLAB DEPRESSION (FOR CERAMIC TILE FLOOR FINISH OR ACCESS FLOOR SYSTEM), SEE FLOOR PLANS FOR ADDITIONAL INFO.
- SLAB DEPRESSION FOR RECESSED FLOOR MATS, SEE DETAIL **15/9.50** FOR DEPTH, SEE FLOOR PLAN, SHEET **A0.11** FOR SIZE. △1
- 6" TALL CONCRETE LOCKER CURB, COORDINATE EXACT WIDTH W/ LOCKER MANUFACTURER AND DETAIL **12/9.50**
- 6" TALL CONCRETE CURB. FOR CURB WIDTHS AND LOCATIONS OF OPENINGS WITHIN CURB, SEE **ARCH. FLOOR PLANS**
- BRACE FRAME, SEE **STRUCT. DWG'S.**
- INTERIOR PARTITION - FOR LOCATIONS, SEE **FLOOR PLANS** △1
- WALL DUCT LOCATIONS, PROVIDE BLOCKOUT IN SLAB AND/OR CURB AS INDICATED AND PER DETAIL **18/4.03** △1
- RWL CAST IRON RAIN WATER LEADER CONNECTING TO STORM DRAIN SYSTEM. SEE DETAIL **1/A6.15 AND SITE IMPROVEMENT PLANS, (SHEETS AS.4A THRU AS.4D)** △1

KEY PLAN

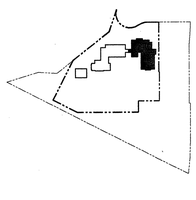

tBP
architecture
planning
interiors
management

LICENSED ARCHITECT
STATE OF CALIFORNIA
NO. C-8685

tBP/Architecture
1000 Burnett Ave, Suite 140
Concord, CA 94520
ph: 925.246.6419 fx: 925.246.6495

architect

consultant

APPROVED
INSPECTOR STAMP
DIV. OF THE STATE ARCHITECT
OFFICE OF REGULATION SERVICES
APPL NO. 105719
DATE 6-9-04

agency

SAN RAMON VALLEY CENTER

CONTRA COSTA COMMUNITY COLLEGE DISTRICT

SAN RAMON, CALIFORNIA

owner

tBP project number : 2021.2.00

file name: A-0012_1flr.dwg

drawn by: mM checked by:

date: 03-04-04 plot scale: 1:1

Rev:	date:	description:
△1	03-29-04	DESIGN CLARIFICATIONS

drawing title: building no.:

FIRST FLOOR - EAST HORIZONTAL CONTROL

drawing no.:

A0.12

drawing of

GENERAL NOTES

1. FOR ADDITIONAL HORIZONTAL CONTROL INFORMATION NOT INDICATED HERE, SEE FLOOR PLANS, SHEETS **A1.11, A1.12, A1.21, AND A1.22**
2. ALL DIMENSIONS ON THESE "HORIZONTAL CONTROL" ARE TAKEN TO FACE OF CONCRETE UNLESS NOTED OTHERWISE.
3. THE PURPOSE OF THESE DRAWINGS IS TO ESTABLISH KEY HORIZONTAL CONTROL POINTS FOR CONCRETE WORK NECESSARY TO CONSTRUCT VERTICAL ELEMENTS REFERENCED IN THE FLOOR PLANS.
4. WHERE DIMENSIONS ARE OMITTED, REFER TO OTHER DRAWINGS IN THESE DOCUMENTS FOR ADDITIONAL INFORMATION.
4. FOR ADDITIONAL SLAB PENETRATION INFORMATION NOT SHOWN HERE, SEE **MECH, ELEC, PLUMB, AND LAB DRAWGS.**
5. FOR TYPICAL LOCATION OF SECOND FLOOR SLAB EDGES AT CURTAIN WALLS, SEE DETAIL **14/3.01**

KEYNOTES (NOT ALL KEYNOTES APPLY TO ALL PLANS)

1 LINE OF CURTAIN WALL (SHOWN "DASHED" FOR CLARITY), SEE DETAIL **14/3.01**

2 EDGE OF SLAB

HORIZONTAL CONTROL PLAN LEGEND

- COMPLETE SLAB PENETRATION OR ELEVATOR PIT
- 2 1/2" SLAB DEPRESSION (FOR CERAMIC TILE FLOOR FINISH OR ACCESS FLOOR SYSTEM), SEE FLOOR PLANS FOR ADDITIONAL INFO.
- SLAB DEPRESSION FOR RECESSED FLOOR MATS, SEE DETAIL **15/9.50** FOR DEPTH, SEE FLOOR PLAN, SHEET **A0.11** FOR SIZE.
- 6" TALL CONCRETE LOCKER CURB, COORDINATE EXACT WIDTH W/ LOCKER MANUFACTURER AND DETAIL **12/9.50**
- 6" TALL CONCRETE CURB, FOR CURB WIDTHS AND LOCATIONS OF OPENINGS WITHIN CURB, SEE **ARCH. FLOOR PLANS**
- BRACE FRAME, SEE **STRUCT. DWG'S.**
- INTERIOR PARTITION - FOR LOCATIONS, SEE **FLOOR PLANS**
- WALL DUCT LOCATIONS, PROVIDE BLOCKOUT IN SLAB AND/OR CURB AS INDICATED AND PER DETAIL **18/4.03**
- RWL CAST IRON RAIN WATER LEADER CONNECTING TO STORM DRAIN SYSTEM, SEE DETAIL **1/A6.15 AND SITE IMPROVEMENT PLANS, (SHEETS A5.4A THRU A5.4D)**

KEY PLAN

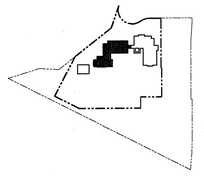

SECOND FLOOR HORIZONTAL CONTROL PLAN - WEST
SCALE: 1/8" = 1'-0"

1

tBP
architecture
planning
interiors
management

tBP/Architecture
1000 Burnett Ave, Suite 140
Concord, CA 94520
ph. 9252466419 fx. 9252466495

architect

consultant

APPROVED
DEPARTMENTAL STAMP
BY: DEPARTMENT OF STATE ARCHITECT
OFFICE OF REGULATION SERVICES
APPL. NO. 03-119
ACTION: FIELD VERIFIED
DATE: 6-17-04

agency

SAN RAMON VALLEY CENTER

CONTRA COSTA COMMUNITY COLLEGE DISTRICT

SAN RAMON, CALIFORNIA

owner

tBP project number : 20212.00
file name: A-00121_2flr.dwg
drawn by: mM checked by:
date: 03-04-04 plot scale: 1:1

Rev:	date:	description:
1	05-26-04	DESIGN CLARIFICATIONS

drawing title: SECOND FLOOR - WEST HORIZONTAL CONTROL

building no:

drawing no: A0.21

drawing of

GENERAL NOTES

1. FOR ADDITIONAL HORIZONTAL CONTROL INFORMATION NOT INDICATED HERE, SEE FLOOR PLANS, SHEETS **A1.11, A1.12, A1.21, AND A1.22**
2. ALL DIMENSIONS ON THESE "HORIZONTAL CONTROL" ARE TAKEN TO FACE OF CONCRETE UNLESS NOTED OTHERWISE.
3. THE PURPOSE OF THESE DRAWINGS IS TO ESTABLISH KEY HORIZONTAL CONTROL POINTS FOR CONCRETE WORK NECESSARY TO CONSTRUCT VERTICAL ELEMENTS REFERENCED IN THE FLOOR PLANS.
4. WHERE DIMENSIONS ARE OMITTED, REFER TO OTHER DRAWINGS IN THESE DOCUMENTS FOR ADDITIONAL INFORMATION.
4. FOR ADDITIONAL SLAB PENETRATION INFORMATION NOT SHOWN HERE, SEE **MECH, ELEC, PLUMB, AND LAB DRAWG'S.**
5. FOR TYPICAL LOCATION OF SECOND FLOOR SLAB EDGES AT CURTAIN WALLS, SEE DETAIL **14/3.01**

KEYNOTES (NOT ALL KEYNOTES APPLY TO ALL PLANS)

1 LINE OF CURTAIN WALL (SHOWN "DASHED" FOR CLARITY), SEE DETAIL **14/3.01**

2 EDGE OF SLAB

HORIZONTAL CONTROL PLAN LEGEND

- COMPLETE SLAB PENETRATION OR ELEVATOR PIT
- 2 1/2" SLAB DEPRESSION (FOR CERAMIC TILE FLOOR FINISH OR ACCESS FLOOR SYSTEM), SEE FLOOR PLANS FOR ADDITIONAL INFO.
- SLAB DEPRESSION FOR RECESSED FLOOR MATS, SEE DETAIL **15/9.50** FOR DEPTH, SEE FLOOR PLAN, SHEET **A0.11** FOR SIZE. ⚠1
- 6" TALL CONCRETE LOCKER CURB, COORDINATE EXACT WIDTH W/ LOCKER MANUFACTURER AND DETAIL **12/9.50**
- 6" TALL CONCRETE CURB, FOR CURB WIDTHS AND LOCATIONS OF OPENINGS WITHIN CURB, SEE **ARCH. FLOOR PLANS**
- BRACE FRAME, SEE **STRUCT. DWG'S.**
- INTERIOR PARTITION - FOR LOCATIONS, SEE **FLOOR PLANS** ⚠1
- WALL DUCT LOCATIONS, PROVIDE BLOCKOUT IN SLAB AND/OR CURB AS INDICATED AND PER DETAIL **18/4.03** ⚠1
- FDVL — CAST IRON RAIN WATER LEADER CONNECTING TO STORM DRAIN SYSTEM. SEE DETAIL **1/A6.15 AND SITE IMPROVEMENT PLANS, SHEETS AS4A THRU AS4D)** ⚠1

KEY PLAN

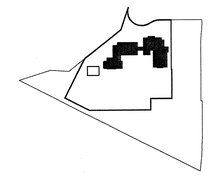

SECOND FLOOR HORIZONTAL CONTROL PLAN - EAST

SCALE: 1/8" = 1'-0"

1

tBP architecture planning interiors management

tBP/Architecture
1000 Burnett Ave, Suite 140
Concord, CA 94520
ph: 925.246.6419 fx: 925.246.6495

architect

consultant

APPROVED
DIV. OF THE STATE ARCHITECT
OFFICE OF REGULATION SERVICES
APP. NO. 102719
DATE 6-9-04

agency

SAN RAMON VALLEY CENTER

CONTRA COSTA COMMUNITY COLLEGE DISTRICT

SAN RAMON, CALIFORNIA

owner

tBP project number : 2021.00
file name: A-0022_2fl-r.dwg
drawn by: mM checked by:
date: 03-09-04 plot scale: 1:1

Rev:	date:	description:
⚠5	05-26-04	DESIGN CLARIFICATIONS

drawing title: SECOND FLOOR - EAST HORIZONTAL CONTROL

building no:

drawing no: A0.22

drawing of

GENERAL NOTES

1. THESE PLANS ARE DIAGRAMATIC AND ARE PROVIDED FOR THE CONVENIENCE OF PROJECT FAMILIARIZATION PURPOSES ONLY. SEE FLOOR PLANS FOR DETAILED INFORMATION.
2. FINAL DESIGN OF REQUIRED "EVACUATION MAPS" SHALL BE APPROVED BY OWNER AND DSA AND LOCATED AS INDICATED ON THIS PLAN.

GENERAL SIGNAGE NOTES

1. FOR SIGNS THAT ARE LOCATED ON OR NEAR DOORS AND OTHER ROOM IDENTIFICATION SIGNAGE NOT INDICATED ON THIS PLAN, SEE DOOR SCHEDULE SHEETS: **8.01, 8.02, AND 8.01CP**
2. FOR DETAILS AND OTHER GENERAL SIGN INFORMATION, SEE SHEET **11.01**
3. PROVIDE RAISED LETTERS / CALIFORNIA GRADE BRAILLE "EXIT" SIGNS AT ALL EXIT DOORS (NOTE: THIS IS IN ADDITION TO THE OVERHEAD/LOW-LEVEL ILLUMINATED EXIT SIGNS) WHICH HAVE OVERHEAD ILLUMINATED EXIT SIGNS

GRADE 2

SIGNAGE LEGEND

SIGN TYPE ABBREVIATION
DETAIL REFERENCE
OCCU 00/A0.0
" MAXIMUM OCCUPANCY 50"
SIGN TEXT OR DESCRIPTION

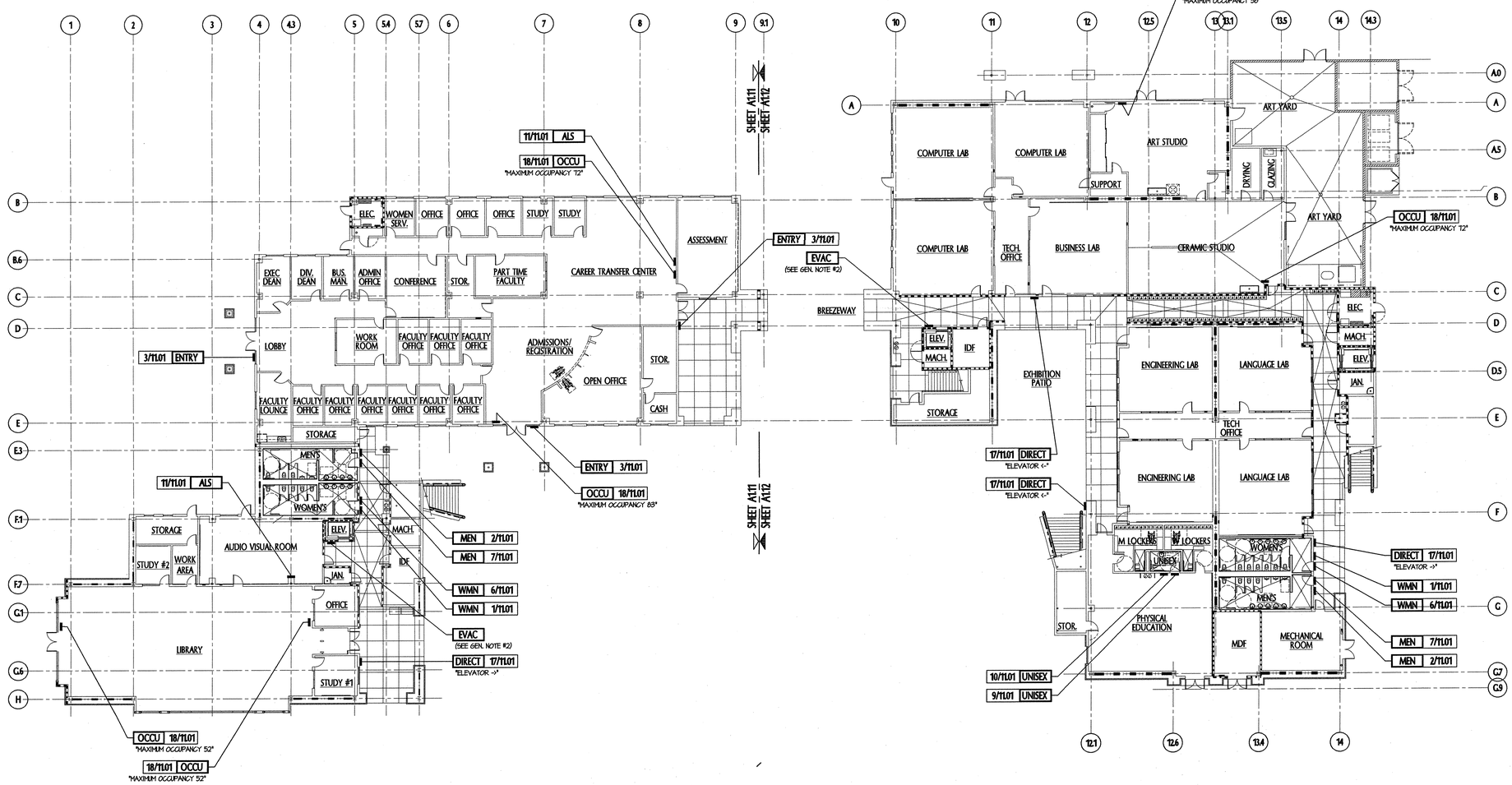

KEY PLAN

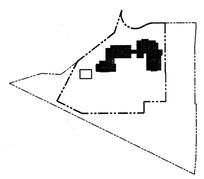

OVERALL FIRST FLOOR AND SIGN LOCATION PLAN
SCALE: 1/16" = 1'-0" | 1

THE ARCHITECT IS DETERMINED TO RIGHT AWAY TO DO

tBP
architecture
planning
interiors
management

tBP/Architecture
1000 Burnett Ave, Suite 140
Concord, CA 94520
ph. 925.246.6419 fx: 925.246.6495

architect

consultant

DSA APPROVED STAMP
DIV. OF THE STATE ARCHITECT
OFFICE OF REGULATION SERVICES
APPL. NO. 10119
APPROVED
DATE: APR 15 2015

agency

SAN RAMON VALLEY CENTER

CONTRA COSTA COMMUNITY COLLEGE DISTRICT

SAN RAMON, CALIFORNIA

owner

tBP project number : 20212.00
file name: A-0110_111.dwg
drawn by: DM checked by:
date: 03-04-04 plot scale: 1:1

Rev:	date:	description:

drawing title: OVERALL FIRST FLOOR & SIGN LOCATION PLAN

building no:

drawing no: A1.10

drawing of

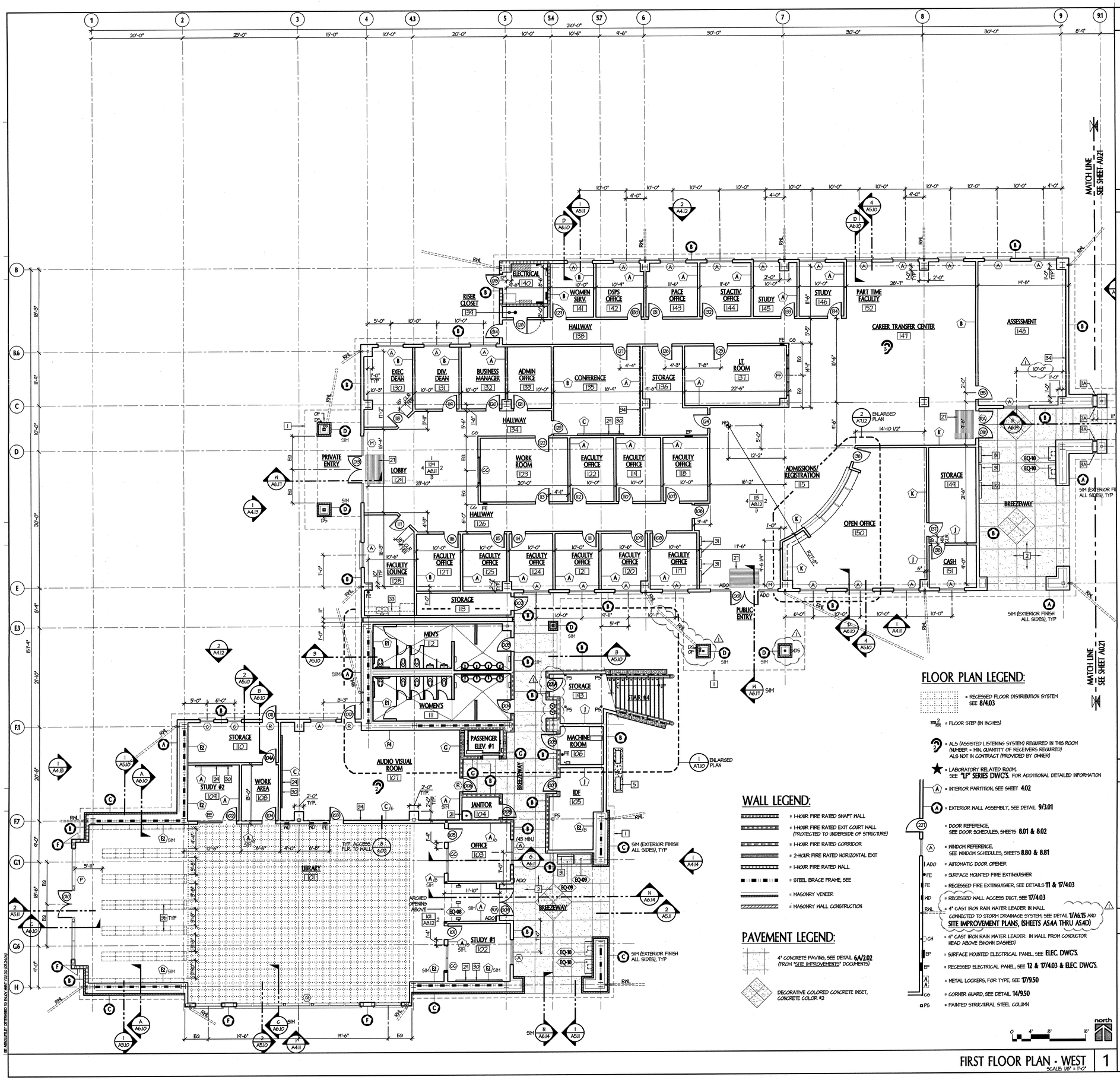

GENERAL NOTES

1. ALL DIMENSIONS SHALL BE TAKEN TO FACE OF WALL FINISH, AS DEFINED IN THE INTERIOR PARTITION SCHEDULE, UNLESS NOTED OTHERWISE.
2. FOR PRIMARY DIMENSIONS NOT INDICATED ON THESE PLANS, REFER TO "HORIZONTAL CONTROL PLANS", SHEETS **A0.11, A0.12, A0.21, AND A0.22**
3. FLOOR MOUNTED DOORSTOPS AND SIMILAR OBSTRUCTIONS TO BE INSTALLED 4" MAXIMUM FROM THE FACE OF WALL OR PARTITION.
4. FOR TYPICAL DOOR OPENING LOCATIONS, DIMENSIONS, AND REQUIRED CLEARANCES. SEE DETAILS **2&7/8.50**
5. A POSTED SIGN STATING THE ROOM CAPACITY SHALL BE PROVIDED AS PER **SEC. 10007.2.6 CBC** AT ALL SPACES WHERE THE OCCUPANCY LOAD IS INDICATED ON THE FLOOR PLAN.
6. UNLESS NOTED OTHERWISE, ALL INTERIOR PARTITIONS ARE TYPE (A)
7. ALL PARTITIONS TO RECEIVE WALL MOUNTED EQUIPMENT, ACCESSORIES, FIXTURES, & ETC., SHALL BE PROVIDED WITH BACKING PLATES PER DETAILS **16, 17, & 18/4.02**
8. FOR ADDITIONAL SIGNAGE REQUIREMENTS NOT INDICATED HERE, SEE SHEETS **A1.10 AND A1.20**

KEYNOTES (NOT ALL KEYNOTES APPLY TO ALL PLANS)

1. LINE OF ROOF OVERHANG OR OTHER CONSTRUCTION ABOVE (SHOWN "DASHED")
2. CONCRETE SIDEWALK, LIGHT BROOM FINISH, SLOPED AWAY FROM BUILDING.
3A. EXPANSION JOINT, SEE DETAIL **8/3.01**
3B. EXPANSION JOINT IN FLOOR, SEE DETAIL **3/3.01**
4. WASH SINK W/ CLAY TRAP, SEE **PLUMB. DWG'S.** AND **1/P1.4**
5. PAD MOUNTED CONDENSING UNIT, SEE **MECH. DWG'S.**
6. ACCESSIBLE DRINKING FOUNTAINS- SEE DETAIL **6/A7.11** AND **PLUMB. DWG'S.**
7. TRENCH DRAIN CONNECTED TO CLAY TRAP, SEE **PLUMB. DWG'S.**
8. OVERHEAD COMPRESSED AIR HOSE REEL, SEE **MECH/PLUMB. DWG'S.**
9. REINFORCED CONCRETE APRON
10. LANDSCAPING
11. 8" SPLIT FACE CMU WALL
12. ELECTRICAL TRANSFORMER AND PAD, SEE **ELEC. DWG'S** (IN "SITE IMPROVEMENTS" DOCUMENTS)
13. BUILT-UP FLOOR PLATFORM AND STEPS, SEE DETAIL **10/9.50**
14. CONTINUOUS GUTTER, SEE ROOF PLAN
15. CONCRETE TILE ROOF BELOW, SEE ROOF PLAN
16. LINE OF WALL OR COLUMN BELOW (SHOWN "DASHED")
17. LIGHTWEIGHT CONCRETE DECK OVER COMPOSITE STRUCTURAL DECK, SEE DETAIL **18e/3.01**
18. PAINTED METAL GUARDRAIL SYSTEM, SEE DETAIL **17/10.01**
19. CONTINUOUS BUILT-IN GUTTER SYSTEM, SEE BUILDING SECTIONS AND DETAILS **3 & 5/7.02**
20. LINE OF WALL TRIM BAND BELOW
21. JANITOR'S SINK, SEE PLUMBING DRAWINGS
22. DOWNSPOUT, ROUTE DRAIN LEADER DOWN FURRED COLUMN.
23. SCORED, COLORED CONC., SEE
24. TRASH BINS PROVIDED BY OWNER
25. BUILT- IN CASEWORK
26. (NOT USED)
27. 6'-4" x 4'-0" RECESSED FLOOR MATT, SEE DETAIL **15/9.50**
28. TRANSITION LINE OF FLOOR FINISH
29. PROJECTOR SCREEN BY OWNER (NIC)
30. MARKER BOARD
31. INFORMATION BOARD, SEE **20/11.01**
32. DIRECTORY SIGN, SEE **19/11.01**
33. FUTURE KITCHEN CABINETS, FIXTURES, AND EQUIPMENT (BY OWNER)
34. FIBERGLASS-CORE ACOUSTICAL PANELS, SEE **9/9.50**
35. PAD MOUNTED MECHANICAL EQUIPMENT SEE MECHANICAL
36. BOOKSTACKS, OWNER FURNISHED, CONTRACTOR INSTALLED (OFCI), FOR ANCHORAGE DETAILS, SEE **15 AND 16/6.50**
37. METAL ROOF BELOW
38. PRECAST CONCRETE WALL CAP, (SEE DETAIL **14/2.01**)
39. KILN HOOD BELOW (SHOWN "DASHED")
40. FIXED SEATING (PROVIDED BY OWNER, INSTALLED BY CONTRACTOR) AND TIERED FLOOR, SEE **10/9.50**
41. RAISED CONC. EQUIPMENT PLATFORM
42. HANDRAIL AT TIERED FLOOR, SEE DETAIL **8/9.50**
43. ATTIC ACCESS LADDER AND HATCH, SEE **16/10.03**
44. COLUMN PAD ON 6" CURB TYP.
45. TRANSLUCENT PANEL SYSTEM, SEE DETAIL **2/9.50**
46. HSS SUPPORT BEAM BELOW (SHOWN "DASHED"), SEE **STRUCT. DWG'S.**

FLOOR PLAN LEGEND:

= RECESSED FLOOR DISTRIBUTION SYSTEM SEE **8/4.03**

= FLOOR STEP (IN INCHES)

= ALS (ASSISTED LISTENING SYSTEM) REQUIRED IN THIS ROOM (NUMBER = MIN. QUANTITY OF RECEIVERS REQUIRED) ALS NOT IN CONTRACT (PROVIDED BY OWNER)

= LABORATORY RELATED ROOM, SEE **"LP" SERIES DWG'S.** FOR ADDITIONAL DETAILED INFORMATION

WALL LEGEND:

= 1-HOUR FIRE RATED SHAFT WALL
= 1-HOUR FIRE RATED EXIT COURT WALL (PROTECTED TO UNDERSIDE OF STRUCTURE)
= 1-HOUR FIRE RATED CORRIDOR
= 2-HOUR FIRE RATED HORIZONTAL EXIT
= 1-HOUR FIRE RATED WALL
= STEEL BRACE FRAME, SEE
= MASONRY VENEER
= MASONRY WALL CONSTRUCTION

PAVEMENT LEGEND:

4" CONCRETE PAVING, SEE DETAIL **6A/2.02** (FROM "SITE IMPROVEMENTS" DOCUMENTS)

DECORATIVE COLORED CONCRETE INSET, CONCRETE COLOR #2

- (A) = INTERIOR PARTITION, SEE SHEET **4.02**
- (A) = EXTERIOR WALL ASSEMBLY, SEE DETAIL **9/3.01**
- 227 / A = DOOR REFERENCE, SEE DOOR SCHEDULES, SHEETS **8.01 & 8.02**
- A = WINDOW REFERENCE, SEE WINDOW SCHEDULES, SHEETS **8.80 & 8.81**
- ADO = AUTOMATIC DOOR OPENER
- FE = SURFACE MOUNTED FIRE EXTINGUISHER
- FE = RECESSED FIRE EXTINGUISHER, SEE DETAILS **11 & 17/4.03**
- MD = RECESSED WALL ACCESS DUCT, SEE **17/4.03**
- RWL = 4" CAST IRON RAIN WATER LEADER IN WALL CONNECTED TO STORM DRAINAGE SYSTEM, SEE DETAIL **1/A6.15** AND **SITE IMPROVEMENT PLANS, (SHEETS A5.4A THRU A5.4D)**
- GH = 4" CAST IRON RAIN WATER LEADER IN WALL FROM CONDUCTOR HEAD ABOVE (SHOWN DASHED)
- EP = SURFACE MOUNTED ELECTRICAL PANEL, SEE **ELEC. DWG'S.**
- EP = RECESSED ELECTRICAL PANEL, SEE **12 & 17/4.03 & ELEC. DWG'S.**
- A A = METAL LOCKERS, FOR TYPE, SEE **17/9.50**
- GG = CORNER GUARD, SEE DETAIL **14/9.50**
- PS = PAINTED STRUCTURAL STEEL COLUMN

EQUIPMENT SCHEDULE

EQ-01	ELECTRIC KILN, SEE SPEC. SECTION **11505**
EQ-02	GAS KILN, SEE SPEC. SECTION **11505**
EQ-03	KILN HOOD, SEE **MECHANICAL DWGS**
EQ-04	GLASSING AND ENAMEL BOOTH
EQ-05	DUST COLLECTION EQUIPMENT, SEE SPEC. SECTION **11510**
EQ-06	THINNER TANK
EQ-07	HAZARDOUS MATERIALS CONTAINER, SEE SPEC. SECTION
EQ-08	THEFT SENSORING DEVICE, SEE SPEC. SECTION **11053**
EQ-09	BOOK DROP, SEE SPEC. SECTION **11052**
EQ-10	PAY TELEPHONE (NIC - BY SCHOOL DISTRICT)

KEY PLAN

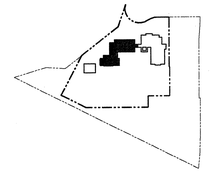

0 4' 8' 16' north

FIRST FLOOR PLAN - WEST
SCALE: 1/8" = 1'-0" | 1

tBP architecture planning interiors management

LICENSED ARCHITECT JAMES R. PAUL No. C-9881 STATE OF CALIFORNIA

tBP/Architecture
1000 Burnett Ave, Suite 140
Concord, CA 94520
ph: 9252466419 fx: 9252466495

architect

consultant

APPROVED DIVISION OF THE STATE ARCHITECT OFFICE OF REGULATION SERVICES APPL NO. 105719 DATE 6/9/04

agency

SAN RAMON VALLEY CENTER
CONTRA COSTA COMMUNITY COLLEGE DISTRICT
SAN RAMON, CALIFORNIA

owner

tBP project number : 20212.00
file name: A-0111_llfr.dwg
drawn by: DM checked by:
date: 03-01-04 plot scale: 1:1

Rev.	date:	description:
1	05-26-04	DESIGN CLARIFICATIONS

drawing title: FIRST FLOOR PLAN - WEST
building no:
drawing no: A1.11
drawing of

IF NOT AT LEAST 36" LONG DISREGARD SCALE

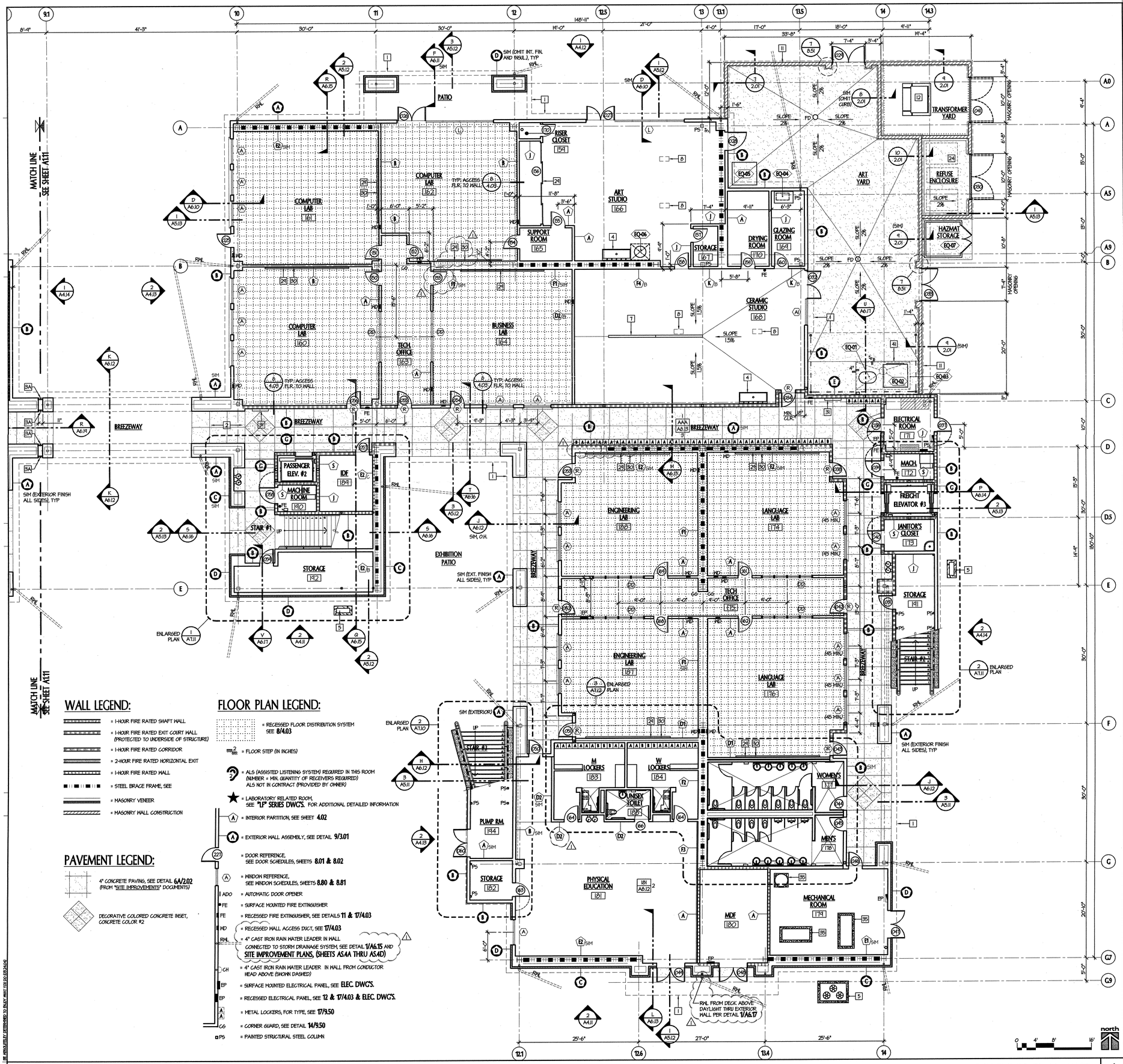

WALL LEGEND:

- = 1-HOUR FIRE RATED SHAFT WALL
- = 1-HOUR FIRE RATED EXIT COURT WALL (PROTECTED TO UNDERSIDE OF STRUCTURE)
- = 1-HOUR FIRE RATED CORRIDOR
- = 2-HOUR FIRE RATED HORIZONTAL EXIT
- = 1-HOUR FIRE RATED WALL
- = STEEL BRACE FRAME, SEE
- = MASONRY VENEER
- = MASONRY WALL CONSTRUCTION

FLOOR PLAN LEGEND:

- = RECESSED FLOOR DISTRIBUTION SYSTEM SEE **8/4.03**
- = FLOOR STEP (IN INCHES)
- = ALS (ASSISTED LISTENING SYSTEM) REQUIRED IN THIS ROOM (NUMBER = MIN. QUANTITY OF RECEIVERS REQUIRED) ALS NOT IN CONTRACT (PROVIDED BY OWNER)
- = LABORATORY RELATED ROOM, SEE **"L" SERIES DWG'S.** FOR ADDITIONAL DETAILED INFORMATION
- = INTERIOR PARTITION, SEE SHEET **4.02**
- = EXTERIOR WALL ASSEMBLY, SEE DETAIL **9/3.01**
- = DOOR REFERENCE, SEE DOOR SCHEDULES, SHEETS **8.01 & 8.02**
- = WINDOW REFERENCE, SEE WINDOW SCHEDULES, SHEETS **8.80 & 8.81**
- ADO = AUTOMATIC DOOR OPENER
- FE = SURFACE MOUNTED FIRE EXTINGUISHER
- FE = RECESSED FIRE EXTINGUISHER, SEE DETAILS **11 & 17/4.03**
- WD = RECESSED WALL ACCESS DUCT, SEE **17/4.03**
- RWL = 4" CAST IRON RAIN WATER LEADER IN WALL CONNECTED TO STORM DRAINAGE SYSTEM, SEE DETAIL **1/A6.15** AND **SITE IMPROVEMENT PLANS, (SHEETS A5.4A THRU A5.4D)**
- = 4" CAST IRON RAIN WATER LEADER IN WALL FROM CONDUCTOR HEAD ABOVE (SHOWN DASHED)
- GH = SURFACE MOUNTED ELECTRICAL PANEL, SEE **ELEC. DWG'S.**
- EP = RECESSED ELECTRICAL PANEL, SEE **12 & 17/4.03 & ELEC. DWG'S.**
- = METAL LOCKERS, FOR TYPE, SEE **17/9.50**
- = CORNER GUARD, SEE DETAIL **14/9.50**
- PS = PAINTED STRUCTURAL STEEL COLUMN

PAVEMENT LEGEND:

- 4" CONCRETE PAVING, SEE DETAIL **6A/2.02** (FROM "SITE IMPROVEMENTS" DOCUMENTS)
- DECORATIVE COLORED CONCRETE INSET, CONCRETE COLOR #2

IF ARCHITECTURAL DRAWINGS ARE REDUCED OR ENLARGED FROM ORIGINAL SIZE, SCALE ACCORDINGLY

GENERAL NOTES

1. ALL DIMENSIONS SHALL BE TAKEN TO FACE OF WALL FINISH, AS DEFINED IN THE INTERIOR PARTITION SCHEDULE, UNLESS NOTED OTHERWISE.
2. FOR PRIMARY DIMENSIONS NOT INDICATED ON THESE PLANS, REFER TO "HORIZONTAL CONTROL PLANS", SHEETS **A0.11, A0.12, A0.21, AND A0.22**
3. FLOOR MOUNTED DOORSTOPS AND SIMILAR OBSTRUCTIONS TO BE INSTALLED 4" MAXIMUM FROM THE FACE OF WALL OR PARTITION.
4. FOR TYPICAL DOOR OPENING LOCATIONS, DIMENSIONS, AND REQUIRED CLEARANCES, SEE DETAILS **2&7/8.50**
5. A POSTED SIGN STATING THE ROOM CAPACITY SHALL BE PROVIDED AS PER **SEC. 10007.2.6 CBC** AT ALL SPACES WHERE THE OCCUPANCY LOAD IS INDICATED ON THE FLOOR PLAN.
6. UNLESS NOTED OTHERWISE, ALL INTERIOR PARTITIONS ARE TYPE (A)
7. ALL PARTITIONS TO RECEIVE WALL MOUNTED EQUIPMENT, ACCESSORIES, FIXTURES, ETC., SHALL BE PROVIDED WITH BACKING PLATES PER DETAILS **16, 17, & 18/4.02**
8. FOR ADDITIONAL SIGNAGE REQUIREMENTS NOT INDICATED HERE, SEE SHEETS **A1.10 AND A1.20**

KEYNOTES (NOT ALL KEYNOTES APPLY TO ALL PLANS)

1. LINE OF ROOF OVERHANG OR OTHER CONSTRUCTION ABOVE (SHOWN "DASHED")
2. CONCRETE SIDEWALK, LIGHT BROOM FINISH, SLOPED AWAY FROM BUILDING.
3A. EXPANSION JOINT, SEE DETAIL **8/3.01**
3B. EXPANSION JOINT IN FLOOR, SEE DETAIL **3/3.01**
4. WASH SINK W/ CLAY TRAP, SEE **PLUMB. DWG'S.** AND **1/P1.4**
5. PAD MOUNTED CONDENSING UNIT, SEE **MECH. DWG'S.**
6. ACCESSIBLE DRINKING FOUNTAINS- SEE DETAIL **6/A7.11** AND **PLUMB. DWG'S.**
7. TRENCH DRAIN CONNECTED TO CLAY TRAP, SEE **PLUMB. DWG'S.**
8. OVERHEAD COMPRESSED AIR HOSE REEL, SEE **MECH./PLUMB. DWG'S.**
9. REINFORCED CONCRETE APRON
10. LANDSCAPING
11. 8" SPLIT FACE CMU WALL
12. ELECTRICAL TRANSFORMER AND PAD, SEE **ELEC. DWG'S** (IN "SITE IMPROVEMENTS" DOCUMENTS)
13. BUILT-UP FLOOR PLATFORM AND STEPS, SEE DETAIL **10/9.50**
14. CONTINUOUS GUTTER, SEE ROOF PLAN
15. CONCRETE TILE ROOF BELOW, SEE ROOF PLAN
16. LINE OF WALL OR COLUMN BELOW (SHOWN "DASHED")
17. LIGHTWEIGHT CONCRETE DECK OVER COMPOSITE STRUCTURAL DECK, SEE DETAIL **18e/3.01**
18. PAINTED METAL GUARDRAIL SYSTEM, SEE DETAIL **17/10.01**
19. CONTINUOUS BUILT-IN GUTTER SYSTEM, SEE BUILDING SECTIONS AND DETAILS **3 & 5/7.02**
20. LINE OF WALL TRIM BAND BELOW
21. JANITOR'S SINK, SEE PLUMBING DRAWINGS
22. DOWNSPOUT, ROUTE DRAIN LEADER DOWN FURRED COLUMN.
23. SCORED, COLORED CONC., SEE
24. TRASH BINS PROVIDED BY OWNER
25. BUILT- IN CASEWORK
26. (NOT USED)
27. 6'-4" x 4'-0" RECESSED FLOOR MATT, SEE DETAIL **15/9.50**
28. TRANSITION LINE OF FLOOR FINISH
29. PROJECTOR SCREEN BY OWNER (NIC)
30. MARKER BOARD
31. INFORMATION BOARD, SEE **20/11.01**
32. DIRECTORY SIGN, SEE **19/11.01**
33. FUTURE KITCHEN CABINETS, FIXTURES, AND EQUIPMENT (BY OWNER)
34. FIBERGLASS-CORE ACOUSTICAL PANELS, SEE **9/9.50**
35. PAD MOUNTED MECHANICAL EQUIPMENT SEE MECHANICAL
36. BOOKSTACKS, OWNER FURNISHED, CONTRACTOR INSTALLED (OFCI), FOR ANCHORAGE DETAILS, SEE **15 AND 16/6.50**
37. METAL ROOF BELOW
38. PRECAST CONCRETE WALL CAP, SEE DETAIL **14/2.01**
39. KILN HOOD BELOW (SHOWN "DASHED")
40. FIXED SEATING (PROVIDED BY OWNER, INSTALLED BY CONTRACTOR) AND TIERED FLOOR, SEE **10/9.50**
41. RAISED CONC. EQUIPMENT PLATFORM
42. HANDRAIL AT TIERED FLOOR, SEE DETAIL **8/9.50**
43. ATTIC ACCESS LADDER AND HATCH, SEE **16/10.03**
44. COLUMN PAD ON 6" CURB TYP.
45. TRANSLUCENT PANEL SYSTEM, SEE DETAIL **2/9.50**
46. HSS SUPPORT BEAM BELOW (SHOWN "DASHED"), SEE **STRUCT. DWG'S.**

EQUIPMENT SCHEDULE

- EQ-01 ELECTRIC KILN, SEE SPEC. SECTION **11505**
- EQ-02 GAS KILN, SEE SPEC. SECTION **11505**
- EQ-03 KILN HOOD, SEE **MECHANICAL DWGS**
- EQ-04 GLASSING AND ENAMEL BOOTH
- EQ-05 DUST COLLECTION EQUIPMENT, SEE SPEC. SECTION **11510**
- EQ-06 THINNER TANK
- EQ-07 HAZARDOUS MATERIALS CONTAINER, SEE SPEC. SECTION
- EQ-08 THEFT SENSORING DEVICE, SEE SPEC. SECTION **11053**
- EQ-09 BOOK DROP, SEE SPEC. SECTION **11052**
- EQ-10 PAY TELEPHONE (NIC - BY SCHOOL DISTRICT)

KEY PLAN

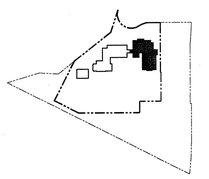

FIRST FLOOR PLAN - EAST
SCALE: 1/8" = 1'-0" 1

tBP architecture planning interiors management
tBP/Architecture
1000 Burnett Ave, Suite 140
Concord, CA 94520
ph: 925.246.6494 fx: 925.246.6495

architect

consultant

APPROVED
DEPARTMENT OF THE STATE ARCHITECT
DIV. OF REGULATION SERVICES
APPL NO. 105719
BY: [illegible]
DATE: 6-7-05

agency

SAN RAMON VALLEY CENTER
CONTRA COSTA COMMUNITY COLLEGE DISTRICT
SAN RAMON, CALIFORNIA

owner

tBP project number : 20212.00
file name: A-0112_1flr.dwg
drawn by: DM checked by:
date: 03-01-04 plot scale: 1:1

Rev.	date:	description:
1	03-24-04	DESIGN CLARIFICATIONS

drawing title: FIRST FLOOR PLAN - EAST
building no.:
drawing no.: A1.12
drawing of

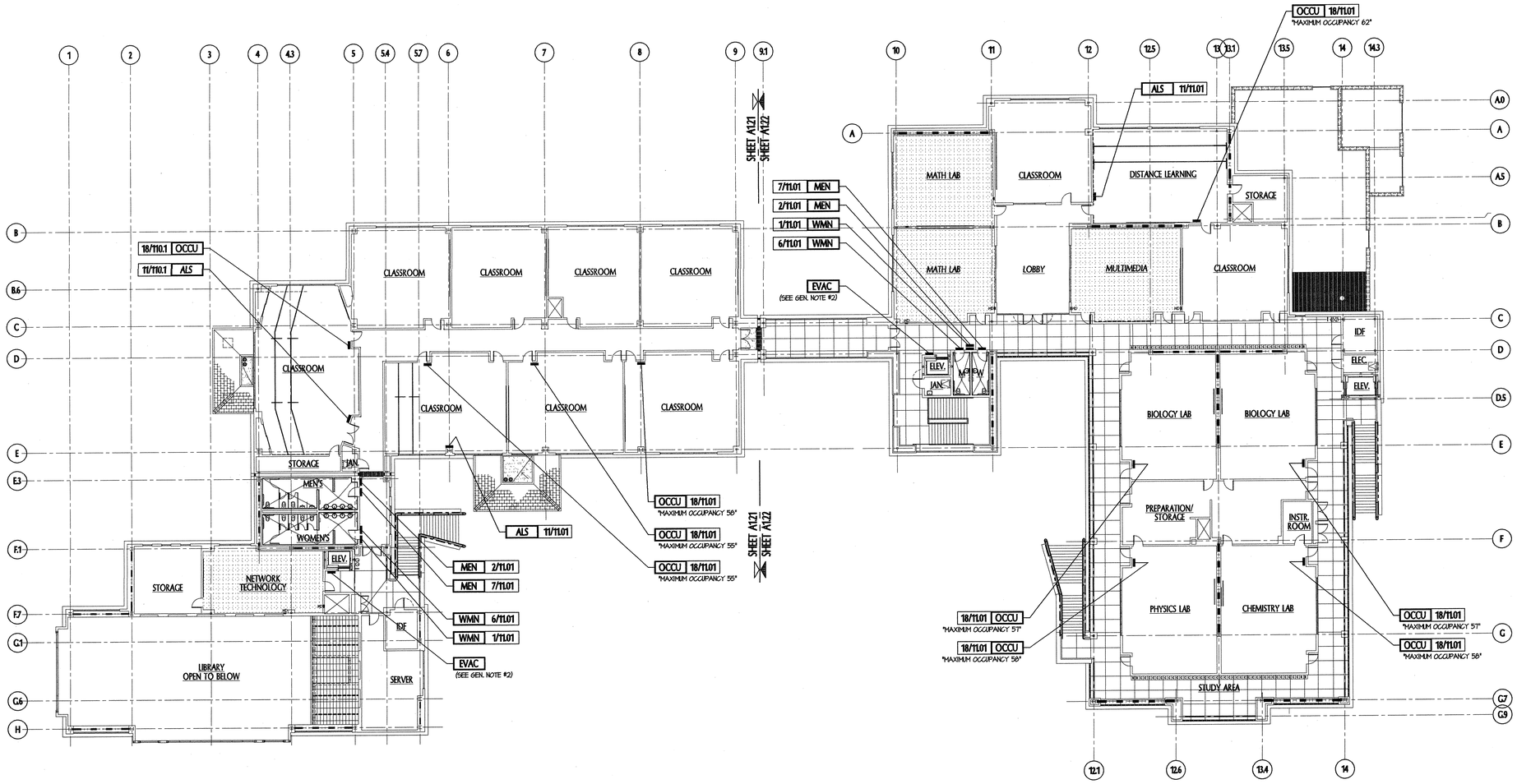

OVERALL SECOND FLOOR AND SIGN LOCATION PLAN 1

SCALE: 1/16" = 1'-0"

GENERAL NOTES

1. THESE PLANS ARE DIAGRAMATIC AND ARE PROVIDED FOR THE CONVENIENCE OF PROJECT FAMILIARIZATION PURPOSES ONLY. SEE FLOOR PLANS FOR DETAILED INFORMATION.
2. FINAL DESIGN OF REQUIRED "EVACUATION MAPS" SHALL BE APPROVED BY OWNER AND DSA AND LOCATED AS INDICATED ON THIS PLAN.

GENERAL SIGNAGE NOTES

1. FOR SIGNS THAT ARE LOCATED ON OR NEAR DOORS AND OTHER ROOM IDENTIFICATION SIGNAGE NOT INDICATED ON THIS PLAN, SEE DOOR SCHEDULE SHEETS: **8.01, 8.02, AND 8.01CP**
2. FOR DETAILS AND OTHER GENERAL SIGN INFORMATION, SEE SHEET **11.01**
3. PROVIDE RAISED LATTERS / CALIFORNIA GRADE BRAILLE "EXIT" SIGNS AT ALL EXIT DOORS (NOTE: THIS IS IN ADDITION TO THE OVERHEAD/LOW-LEVEL ILLUMINATED EXIT SIGNS.)

SIGNAGE LEGEND

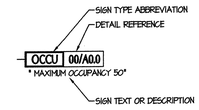

KEY PLAN

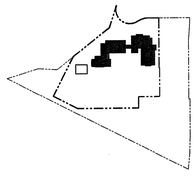

tBP architecture planning interiors management

tBP/Architecture
1000 Burnett Ave, Suite 140
Concord, CA 94520
ph: 925.246.6419 fx: 925.246.6495

architect

consultant

agency

SAN RAMON VALLEY CENTER

CONTRA COSTA COMMUNITY COLLEGE DISTRICT

SAN RAMON, CALIFORNIA

owner

tBP project number : 20212.00

file name: A-0120_2flr.dwg

drawn by: DM checked by:

date: 03-04-04 plot scale: 1:1

Rev:	date:	description:

drawing title: building no.:

OVERAL 2ND FLOOR & SIGN LOCATION PLAN

drawing no.:

A1.20

drawing of

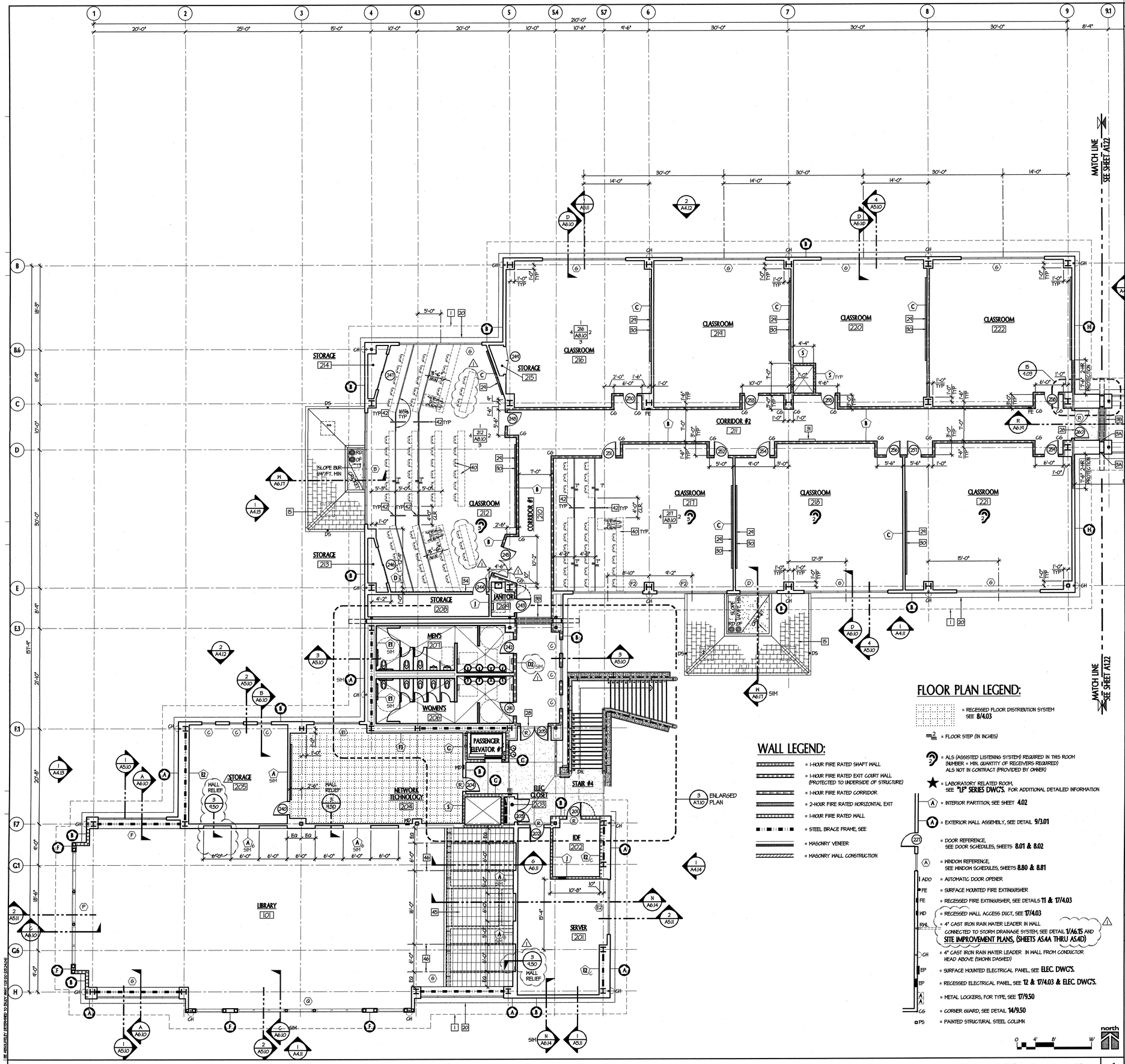

GENERAL NOTES

1. ALL DIMENSIONS SHALL BE TAKEN TO FACE OF WALL FINISH, AS DEFINED IN THE INTERIOR PARTITION SCHEDULE, UNLESS NOTED OTHERWISE.
2. FOR PRIMARY DIMENSIONS NOT INDICATED ON THESE PLANS, REFER TO "HORIZONTAL CONTROL PLANS", SHEETS **A0.11, A0.12, A0.21, AND A0.22**
3. FLOOR MOUNTED DOORSTOPS AND SIMILAR OBSTRUCTIONS TO BE INSTALLED 4" MAXIMUM FROM THE FACE OF WALL OR PARTITION.
4. FOR TYPICAL DOOR OPENING LOCATIONS, DIMENSIONS, AND REQUIRED CLEARANCES. SEE DETAILS **2&7/8.50**
5. A POSTED SIGN STATING THE ROOM CAPACITY SHALL BE PROVIDED AS PER **SEC. 1004.7.6 CBC** AT ALL SPACES WHERE THE OCCUPANCY LOAD IS INDICATED ON THE FLOOR PLAN.
6. UNLESS NOTED OTHERWISE, ALL INTERIOR PARTITIONS ARE TYPE (A)
7. ALL PARTITIONS TO RECEIVE WALL MOUNTED EQUIPMENT, ACCESSORIES, FIXTURES, ℄ ETC., SHALL BE PROVIDED WITH BACKING PLATES PER DETAILS **16, 17, & 18/4.02**
8. FOR ADDITIONAL SIGNAGE REQUIREMENTS NOT INDICATED HERE, SEE SHEETS **A1.10 AND A1.20**

KEYNOTES (NOT ALL KEYNOTES APPLY TO ALL PLANS)

1. LINE OF ROOF OVERHANG OR OTHER CONSTRUCTION ABOVE (SHOWN "DASHED")
2. CONCRETE SIDEWALK, LIGHT BROOM FINISH, SLOPED AWAY FROM BUILDING.
3A. EXPANSION JOINT, SEE DETAIL **8/3.01**
3B. EXPANSION JOINT IN FLOOR, SEE DETAIL **3/3.01**
4. WASH SINK W/ CLAY TRAP, SEE **PLUMB. DWG'S.** AND **1/P1.4**
5. PAD MOUNTED CONDENSING UNIT, SEE **MECH. DWG'S.**
6. ACCESSIBLE DRINKING FOUNTAIN- SEE DETAIL **6/A7.11** AND **PLUMB. DWG'S.**
7. TRENCH DRAIN CONNECTED TO CLAY TRAP, SEE **PLUMB. DWG'S.**
8. OVERHEAD COMPRESSED AIR HOSE REEL, SEE **MECH./PLUMB. DWG'S.**
9. REINFORCED CONCRETE APRON
10. LANDSCAPING
11. 8" SPLIT FACE CMU WALL
12. ELECTRICAL TRANSFORMER AND PAD, SEE **ELEC. DWG'S** (IN "SITE IMPROVEMENTS" DOCUMENTS) ⚠
13. BUILT-UP FLOOR PLATFORM AND STEPS, SEE DETAIL **10/9.50**
14. CONTINUOUS GUTTER, SEE ROOF PLAN
15. CONCRETE TILE ROOF BELOW, SEE ROOF PLAN
16. LINE OF WALL OR COLUMN BELOW (SHOWN "DASHED")
17. LIGHTWEIGHT CONCRETE DECK OVER COMPOSITE STRUCTURAL DECK, SEE DETAIL **18&7.01**
18. PAINTED METAL GUARDRAIL SYSTEM, SEE DETAIL **17/10.01**
19. CONTINUOUS BUILT-IN GUTTER SYSTEM, SEE BUILDING SECTIONS AND DETAILS **3 & 5/7.02**
20. LINE OF WALL TRIM BAND BELOW
21. JANITOR'S SINK, SEE PLUMBING DRAWINGS
22. DOWNSPOUT, ROUTE DRAIN LEADER DOWN FURRED COLUMN.
23. SCORED, COLORED CONC., SEE
24. TRASH BINS PROVIDED BY OWNER
25. BUILT- IN CASEWORK
26. (NOT USED)
27. 6'-4" x 4'-0" RECESSED FLOOR MATT, SEE DETAIL **15/9.50**
28. TRANSITION LINE OF FLOOR FINISH
29. PROJECTOR SCREEN BY OWNER (NIC) ⚠
30. MARKER BOARD
31. INFORMATION BOARD, SEE **20/11.01**
32. DIRECTORY SIGN, SEE **19/11.01**
33. FUTURE KITCHEN CABINETS, FIXTURES, AND EQUIPMENT (BY OWNER)
34. FIBERGLASS-CORE ACOUSTICAL PANELS, SEE **9/9.50**
35. PAD MOUNTED MECHANICAL EQUIPMENT SEE MECHANICAL
36. BOOKSTACKS, OWNER FURNISHED, CONTRACTOR INSTALLED (OFCI), FOR ANCHORAGE DETAILS, SEE **15 AND 16/6.50**
37. METAL ROOF BELOW
38. PRECAST CONCRETE WALL CAP, (SEE DETAIL **14/2.01**) ⚠
39. KILN HOOD BELOW (SHOWN "DASHED")
40. FIXED SEATING (PROVIDED BY OWNER, INSTALLED BY CONTRACTOR) AND TIERED FLOOR, SEE **10/9.50**
41. RAISED CONC. EQUIPMENT PLATFORM
42. HANDRAIL AT TIERED FLOOR, SEE DETAIL **8/9.50**
43. ATTIC ACCESS LADDER AND HATCH, SEE **16/10.03**
44. COLUMN PAD ON 6" CURB TYP.
45. TRANSLUCENT PANEL SYSTEM, SEE DETAIL **2/9.50**
46. HSS SUPPORT BEAM BELOW (SHOWN "DASHED"), SEE **STRUCT. DWG'S.**

FLOOR PLAN LEGEND:

= RECESSED FLOOR DISTRIBUTION SYSTEM SEE **8/4.03**

= FLOOR STEP (IN INCHES)

= ALS (ASSISTED LISTENING SYSTEM) REQUIRED IN THIS ROOM (NUMBER = MIN. QUANTITY OF RECEIVERS REQUIRED) ALS NOT IN CONTRACT (PROVIDED BY OWNER)

= LABORATORY RELATED ROOM, SEE **"LP" SERIES DWG'S.** FOR ADDITIONAL DETAILED INFORMATION

= INTERIOR PARTITION, SEE SHEET **4.02**

= EXTERIOR WALL ASSEMBLY, SEE DETAIL **9/3.01**

= DOOR REFERENCE, SEE DOOR SCHEDULES, SHEETS **8.01 & 8.02**

= WINDOW REFERENCE, SEE WINDOW SCHEDULES, SHEETS **8.80 & 8.81**

ADO = AUTOMATIC DOOR OPENER

FE = SURFACE MOUNTED FIRE EXTINGUISHER

FE = RECESSED FIRE EXTINGUISHER, SEE DETAILS **11 & 17/4.03**

WD = RECESSED WALL ACCESS DUCT, SEE **17/4.03**

RWL = 4" CAST IRON RAIN WATER LEADER IN WALL CONNECTED TO STORM DRAINAGE SYSTEM, SEE DETAIL **1/A6.15** AND **SITE IMPROVEMENT PLANS, (SHEETS AS.4A THRU AS.4D)** ⚠

= 4" CAST IRON RAIN WATER LEADER IN WALL FROM CONDUCTOR HEAD ABOVE (SHOWN DASHED)

EP = SURFACE MOUNTED ELECTRICAL PANEL, SEE **ELEC. DWG'S.**

EP = RECESSED ELECTRICAL PANEL, SEE **12 & 17/4.03 & ELEC. DWG'S.**

= METAL LOCKERS, FOR TYPE, SEE **17/9.50**

= CORNER GUARD, SEE DETAIL **14/9.50**

= PAINTED STRUCTURAL STEEL COLUMN

WALL LEGEND:

= 1-HOUR FIRE RATED SHAFT WALL

= 1-HOUR FIRE RATED EXIT COURT WALL (PROTECTED TO UNDERSIDE OF STRUCTURE)

= 1-HOUR FIRE RATED CORRIDOR

= 2-HOUR FIRE RATED HORIZONTAL EXIT

= 1-HOUR FIRE RATED WALL

= STEEL BRACE FRAME, SEE

= MASONRY VENEER

= MASONRY WALL CONSTRUCTION

EQUIPMENT SCHEDULE

EQ-01	ELECTRIC KILN, SEE SPEC. SECTION **11505**
EQ-02	GAS KILN, SEE SPEC. SECTION **11505**
EQ-03	KILN HOOD, SEE **MECHANICAL DWGS**
EQ-04	GLASSING AND ENAMEL BOOTH
EQ-05	DUST COLLECTION EQUIPMENT, SEE SPEC. SECTION **11510**
EQ-06	THINNER TANK
EQ-07	HAZARDOUS MATERIALS CONTAINER, SEE SPEC. SECTION
EQ-08	THEFT SENSORING DEVICE, SEE SPEC. SECTION **11053**
EQ-09	BOOK DROP, SEE SPEC. SECTION **11052**
EQ-10	PAY TELEPHONE (NIC - BY SCHOOL DISTRICT) ⚠

KEY PLAN

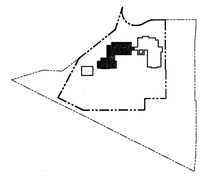

SECOND FLOOR PLAN - WEST
SCALE: 1/8" = 1'-0"

1

tBP architecture planning interiors management
tBP/Architecture
1000 Burnett Ave, Suite 140
Concord, CA 94520
ph: 925.246.6419 fx: 925.246.6495

architect

consultant

APPROVED STAMP
DIV. OF THE STATE ARCHITECT
OFFICE OF REGULATION SERVICES
APPL NO. 09719
BY
DATE 6-4-04

agency

SAN RAMON VALLEY CENTER
CONTRA COSTA COMMUNITY COLLEGE DISTRICT
SAN RAMON, CALIFORNIA

owner

tBP project number : 20212.00
file name: A-0121_2flr.dwg
drawn by: DM checked by:
date: 03-09-04 plot scale: 1:1

Rev.	date:	description:
⚠	03-29-04	DESIGN CLARIFICATIONS

drawing title: SECOND FLOOR PLAN - WEST
building no.:
drawing no.: A1.21
drawing of

DO NOT SCALE DRAWINGS. USE DIMENSIONS ONLY. THE ARCHITECT IS NOT RESPONSIBLE FOR THE ACCURACY OF DIMENSIONS OBTAINED BY SCALING THE DRAWINGS.

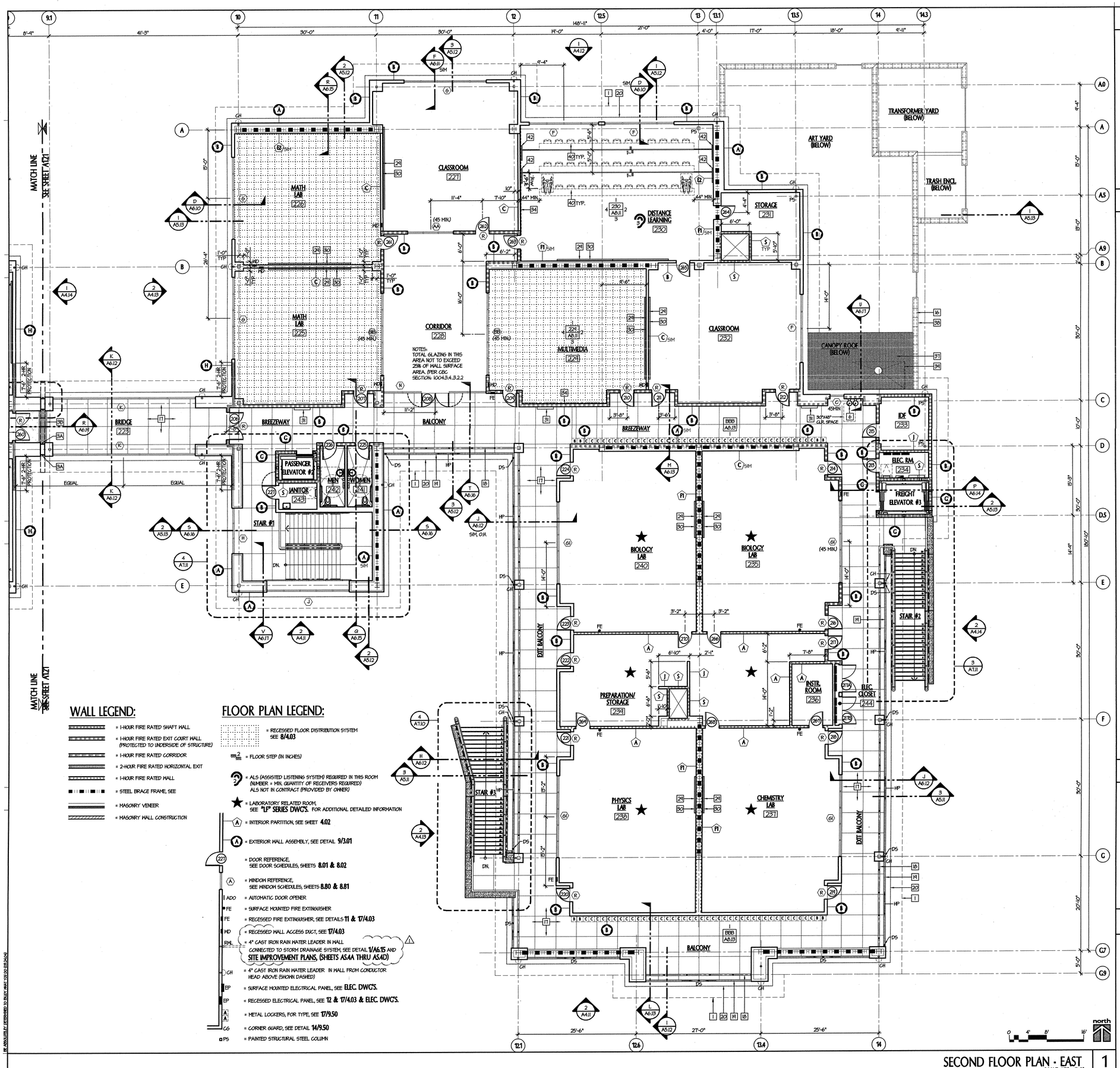

WALL LEGEND:

- = 1-HOUR FIRE RATED SHAFT WALL
- = 1-HOUR FIRE RATED EXIT COURT WALL (PROTECTED TO UNDERSIDE OF STRUCTURE)
- = 1-HOUR FIRE RATED CORRIDOR
- = 2-HOUR FIRE RATED HORIZONTAL EXIT
- = 1-HOUR FIRE RATED WALL
- = STEEL BRACE FRAME, SEE
- = MASONRY VENEER
- = MASONRY WALL CONSTRUCTION

FLOOR PLAN LEGEND:

- = RECESSED FLOOR DISTRIBUTION SYSTEM SEE **8/4.03**
- = FLOOR STEP (IN INCHES)
- = ALS (ASSISTED LISTENING SYSTEM) REQUIRED IN THIS ROOM (NUMBER = MIN. QUANTITY OF RECEIVERS REQUIRED) ALS NOT IN CONTRACT (PROVIDED BY OWNER)
- = LABORATORY RELATED ROOM, SEE **"LP" SERIES DWG'S.** FOR ADDITIONAL DETAILED INFORMATION
- = INTERIOR PARTITION, SEE SHEET **4.02**
- = EXTERIOR WALL ASSEMBLY, SEE DETAIL **9/3.01**
- = DOOR REFERENCE, SEE DOOR SCHEDULES, SHEETS **8.01 & 8.02**
- = WINDOW REFERENCE, SEE WINDOW SCHEDULES, SHEETS **8.80 & 8.81**
- ADO = AUTOMATIC DOOR OPENER
- FE = SURFACE MOUNTED FIRE EXTINGUISHER
- FE = RECESSED FIRE EXTINGUISHER, SEE DETAILS **11 & 17/4.03**
- MD = RECESSED WALL ACCESS DUCT, SEE **17/4.03**
- RWL = 4" CAST IRON RAIN WATER LEADER IN WALL CONNECTED TO STORM DRAINAGE SYSTEM, SEE DETAIL **1/A6.15** AND **SITE IMPROVEMENT PLANS, (SHEETS AS.4A THRU AS.4D)**
- GH = 4" CAST IRON RAIN WATER LEADER IN WALL FROM CONDUCTOR HEAD ABOVE (SHOWN DASHED)
- EP = SURFACE MOUNTED ELECTRICAL PANEL, SEE **ELEC. DWG'S.**
- EP = RECESSED ELECTRICAL PANEL, SEE **12 & 17/4.03 & ELEC. DWG'S.**
- = METAL LOCKERS, FOR TYPE, SEE **17/9.50**
- G6 = CORNER GUARD, SEE DETAIL **14/9.50**
- PS = PAINTED STRUCTURAL STEEL COLUMN

GENERAL NOTES

1. ALL DIMENSIONS SHALL BE TAKEN TO FACE OF WALL FINISH, AS DEFINED IN THE INTERIOR PARTITION SCHEDULE, UNLESS NOTED OTHERWISE.
2. FOR PRIMARY DIMENSIONS NOT INDICATED ON THESE PLANS, REFER TO "HORIZONTAL CONTROL PLANS", SHEETS **A0.11, A0.12, A0.21, AND A0.22**
3. FLOOR MOUNTED DOORSTOPS AND SIMILAR OBSTRUCTIONS TO BE INSTALLED 4" MAXIMUM FROM THE FACE OF WALL OR PARTITION.
4. FOR TYPICAL DOOR OPENING LOCATIONS, DIMENSIONS, AND REQUIRED CLEARANCES, SEE DETAILS **2&7/8.50**
5. A POSTED SIGN STATING THE ROOM CAPACITY SHALL BE PROVIDED AS PER **SEC. 10007.2.6 CBC**, AT ALL SPACES WHERE THE OCCUPANCY LOAD IS INDICATED ON THE FLOOR PLAN.
6. UNLESS NOTED OTHERWISE, ALL INTERIOR PARTITIONS ARE TYPE (A)
7. ALL PARTITIONS TO RECEIVE WALL MOUNTED EQUIPMENT, ACCESSORIES, FIXTURES, & ETC., SHALL BE PROVIDED WITH BACKING PLATES PER DETAILS **16, 17, & 18/4.02**
8. FOR ADDITIONAL SIGNAGE REQUIREMENTS NOT INDICATED HERE, SEE SHEETS **A1.10 AND A1.20**

KEYNOTES (NOT ALL KEYNOTES APPLY TO ALL PLANS)

1. LINE OF ROOF OVERHANG OR OTHER CONSTRUCTION ABOVE (SHOWN "DASHED")
2. CONCRETE SIDEWALK, LIGHT BROOM FINISH, SLOPED AWAY FROM BUILDING.
3A. EXPANSION JOINT, SEE DETAIL **8/3.01**
3B. EXPANSION JOINT IN FLOOR, SEE DETAIL **3/3.01**
4. WASH SINK W/ CLAY TRAP, SEE **PLUMB. DWG'S.** AND **1/P1.4**
5. PAD MOUNTED CONDENSING UNIT, SEE **MECH. DWG'S.**
6. ACCESSIBLE DRINKING FOUNTAINS- SEE DETAIL **6/A7.11** AND **PLUMB. DWG'S.**
7. TRENCH DRAIN CONNECTED TO CLAY TRAP, SEE **PLUMB. DWG'S.**
8. OVERHEAD COMPRESSED AIR HOSE REEL, SEE **MECH/PLUMB. DWG'S.**
9. REINFORCED CONCRETE APRON
10. LANDSCAPING
11. 8" SPLIT FACE CMU WALL
12. ELECTRICAL TRANSFORMER AND PAD, SEE **ELEC. DWG'S** (IN "SITE IMPROVEMENTS" DOCUMENTS)
13. BUILT-UP FLOOR PLATFORM AND STEPS, SEE DETAIL **10/9.50**
14. CONTINUOUS GUTTER, SEE ROOF PLAN
15. CONCRETE TILE ROOF BELOW, SEE ROOF PLAN
16. LINE OF WALL OR COLUMN BELOW (SHOWN "DASHED")
17. LIGHTWEIGHT CONCRETE DECK OVER COMPOSITE STRUCTURAL DECK, SEE DETAIL **18e/3.01**
18. PAINTED METAL GUARDRAIL SYSTEM, SEE DETAIL **17/10.01**
19. CONTINUOUS BUILT-IN GUTTER SYSTEM, SEE BUILDING SECTIONS AND DETAILS **3 & 5/7.02**
20. LINE OF WALL TRIM BAND BELOW
21. JANITOR'S SINK, SEE PLUMBING DRAWINGS
22. DOWNSPOUT, ROUTE DRAIN LEADER DOWN FURRED COLUMN.
23. SCORED, COLORED CONC., SEE
24. TRASH BINS PROVIDED BY OWNER
25. BUILT- IN CASEWORK.
26. (NOT USED)
27. 6'-4" x 4'-0" RECESSED FLOOR MATT, SEE DETAIL **15/9.50**
28. TRANSITION LINE OF FLOOR FINISH
29. PROJECTOR SCREEN BY OWNER (NIC)
30. MARKER BOARD
31. INFORMATION BOARD, SEE **20/11.01**
32. DIRECTORY SIGN, SEE **19/11.01**
33. FUTURE KITCHEN CABINETS, FIXTURES, AND EQUIPMENT (BY OWNER)
34. FIBERGLASS-CORE ACOUSTICAL PANELS, SEE **9/9.50**
35. PAD MOUNTED MECHANICAL EQUIPMENT SEE MECHANICAL
36. BOOKSTACKS, OWNER FURNISHED, CONTRACTOR INSTALLED (OFCI), FOR ANCHORAGE DETAILS, SEE **15 AND 16/6.50**
37. METAL ROOF BELOW
38. PRECAST CONCRETE WALL CAP, (SEE DETAIL **14/2.01**)
39. KILN HOOD BELOW (SHOWN "DASHED")
40. FIXED SEATING (PROVIDED BY OWNER, INSTALLED BY CONTRACTOR) AND TIERED FLOOR, SEE **10/9.50**
41. RAISED CONC. EQUIPMENT PLATFORM
42. HANDRAIL AT TIERED FLOOR, SEE DETAIL **8/9.50**
43. ATTIC ACCESS LADDER AND HATCH, SEE **16/10.03**
44. COLUMN PAD ON 6" CURB TYP.
45. TRANSLUCENT PANEL SYSTEM, SEE DETAIL **2/9.50**
46. HSS SUPPORT BEAM BELOW (SHOWN "DASHED"), SEE **STRUCT. DWG'S.**

EQUIPMENT SCHEDULE

- EQ-01 ELECTRIC KILN, SEE SPEC. SECTION **11505**
- EQ-02 GAS KILN, SEE SPEC. SECTION **11505**
- EQ-03 KILN HOOD, SEE **MECHANICAL DWGS**
- EQ-04 GLASSING AND ENAMEL BOOTH
- EQ-05 DUST COLLECTION EQUIPMENT, SEE SPEC. SECTION **11510**
- EQ-06 THINNER TANK
- EQ-07 HAZARDOUS MATERIALS CONTAINER, SEE SPEC. SECTION
- EQ-08 THEFT SENSORING DEVICE, SEE SPEC. SECTION **11053**
- EQ-09 BOOK DROP, SEE SPEC. SECTION **11052**
- EQ-10 PAY TELEPHONE (NIC - BY SCHOOL DISTRICT)

KEY PLAN

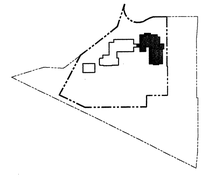

SECOND FLOOR PLAN - EAST
SCALE: 1/8" = 1'-0" | 1

IF ABSOLUTELY DESIGNED TO ENLIST ANALYSIS 09-24-04

tBP architecture planning interiors management
tBP/Architecture
1000 Burnett Ave, Suite 140
Concord, CA 94520
ph: 925.246.6419 fx: 925.246.6495

architect

consultant

APPROVED DEPARTMENT OF STATE ARCHITECT DIVISION OF THE STATE ARCHITECT OFFICE OF REGULATION SERVICES APPL NO. 100719 ACCESS SITE NO. DATE

agency

SAN RAMON VALLEY CENTER

CONTRA COSTA COMMUNITY COLLEGE DISTRICT

SAN RAMON, CALIFORNIA

owner

tBP project number : 20212.00
file name: A-0122_2fr.dwg
drawn by: DM checked by:
date: 03-09-04 plot scale: 1:1

Rev.	date:	description:
1	03-29-04	DESIGN CLARIFICATIONS

drawing title: SECOND FLOOR PLAN - EAST
building no.:
drawing no.: A1.22
drawing of

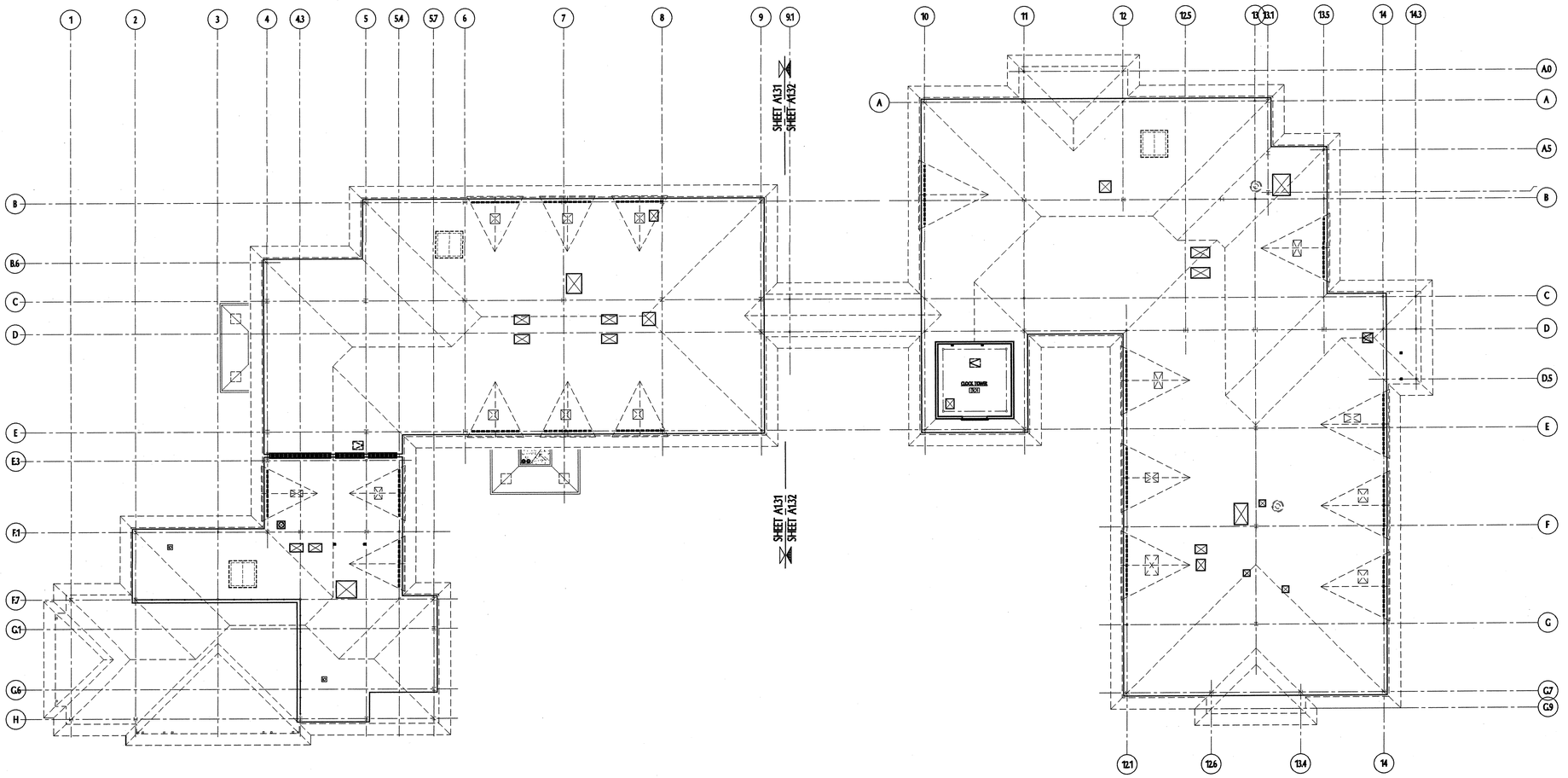

ATTIC PLAN - OVERALL
SCALE: 1/16" = 1'-0"
1

north

NOTES

KEY PLAN

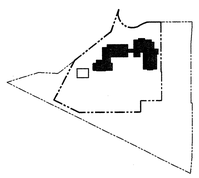

tBP
architecture
planning
interiors
management

tBP/Architecture
1000 Burnett Ave, Suite 140
Concord, CA 94520
ph: 925.246.6419 fx: 925.246.6495

architect

consultant

agency

SAN RAMON VALLEY CENTER

CONTRA COSTA COMMUNITY COLLEGE DISTRICT

SAN RAMON, CALIFORNIA

owner

tBP project number : 20212.00

file name: A-0130_attic.dwg

drawn by: DM checked by:

date: 03-09-04 plot scale: 1:1

Rev:	date:	description:

drawing title: building no.:

ATTIC PLAN - OVERALL

drawing no.:

A1.30

drawing of

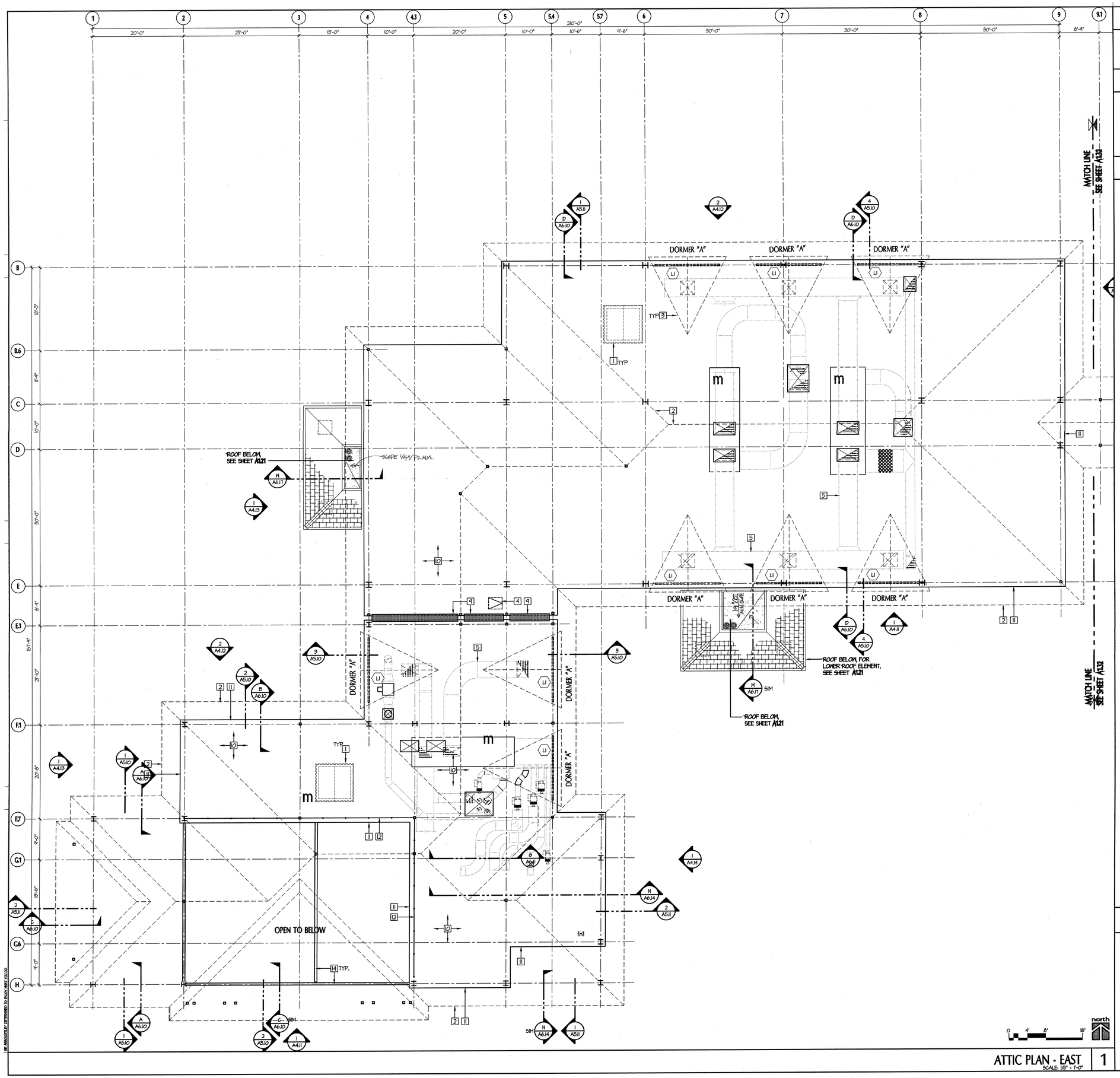

ATTIC PLAN - EAST
SCALE: 1/8" = 1'-0"
1

GENERAL NOTES

1. MECHANICAL EQUIPMENT INDICATED ON THIS PLAN IS FOR CONVENIENCE ONLY. REFER TO MECHANICAL DRAWINGS FOR LOCATIONS OF ALL MECHANICAL EQUIPMENT.

LEGEND

m = MECHANICAL EQUIPMENT, SEE MECHANICAL DRAWINGS

L2 = LOUVER, SEE SCHEDULE SHEET 8.80

KEYNOTES (NOT ALL KEYNOTES APPLY TO ALL PLANS)

1. ROOF ACCESS HATCH ABOVE (SHOWN "DASHED"), SEE ROOF PLAN FOR SIZE AND LOCATION.
2. LINE OF ROOF CONFIGURATION ABOVE (HIP, VALLEY, RIDGE LINES, ETC.) SHOWN "DASHED", SEE ROOF PLAN.
3. LINE OF DORMER ELEMENT ABOVE, SEE ROOF PLAN AND EXTERIOR ELEVATIONS.
4. 30"X36" ACCESS FLOOR DOOR, SEE 16/10.03
5. MECHANICAL DUCTWORK (SHOWN "DOTTED"), SEE MECHANICAL ATTIC PLANS
6. ROOF ELEMENT BELOW, SEE ROOF PLANS
7. FUME HOOD EXHAUST SYSTEM, SEE MECHANICAL DRAWINGS AND ROOF PLANS
8. STEEL FRAMING SYSTEM, SEE STRUCT. DWG'S.
9. EXPANSION JOINT, SEE DETAIL 4/3.01
10. COMPOSITE DECK, SEE DETAIL 18/3.01
11. EDGE OF DECK
12. GUARDRAIL, SEE 4/A6.10
13. BACK LIGHTED FLUSH CLOCK ASSEMBLY
14. EXPOSED STEEL FRAMING, SEE STRUCT. DWG'S.
15. OPENING FOR DUCT PENETRATION THRU ATTIC SLAB, SEE MECH. DWG'S.

KEY PLAN

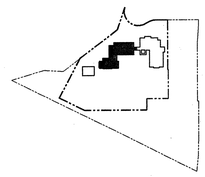

tBP architecture planning interiors management

tBP/Architecture
1000 Burnett Ave, Suite 140
Concord, CA 94520
ph: 925.246.6419 fx: 925.246.6495

architect

consultant

agency

SAN RAMON VALLEY CENTER

CONTRA COSTA COMMUNITY COLLEGE DISTRICT

SAN RAMON, CALIFORNIA

owner

tBP project number : 20212.00

file name: A-0131_attic.dwg

drawn by: DM checked by:

date: 03-09-04 plot scale: 1:1

Rev:	date:	description:

drawing title: building no.:

ATTIC PLAN - WEST

drawing no.:

A1.31

drawing of

GENERAL NOTES

1. MECHANICAL EQUIPMENT INDICATED ON THIS PLAN IS FOR CONVENIENCE ONLY. REFER TO MECHANICAL DRAWINGS FOR LOCATIONS OF ALL MECHANICAL EQUIPMENT.

LEGEND

m = MECHANICAL EQUIPMENT, SEE MECHANICAL DRAWINGS

L2 = LOUVER, SEE SCHEDULE SHEET **8.80**

KEYNOTES (NOT ALL KEYNOTES APPLY TO ALL PLANS)

1. ROOF ACCESS HATCH ABOVE (SHOWN "DASHED"), SEE ROOF PLAN FOR SIZE AND LOCATION.
2. LINE OF ROOF CONFIGURATION ABOVE (HIP, VALLEY, RIDGE LINES, ETC.) SHOWN "DASHED", SEE ROOF PLAN.
3. LINE OF DORMER ELEMENT ABOVE, SEE ROOF PLAN AND EXTERIOR ELEVATIONS.
4. 30"X36" ACCESS FLOOR DOOR, SEE **16/10.03**
5. MECHANICAL DUCTWORK (SHOWN "DOTTED"), SEE MECHANICAL ATTIC PLANS
6. ROOF ELEMENT BELOW, SEE ROOF PLANS
7. FUME HOOD EXHAUST SYSTEM, SEE MECHANICAL DRAWINGS AND ROOF PLANS
8. STEEL FRAMING SYSTEM, SEE **STRUCT. DWG'S.**
9. EXPANSION JOINT, SEE DETAIL **4/3.01**
10. COMPOSITE DECK, SEE DETAIL **18/3.01**
11. EDGE OF DECK
12. GUARDRAIL, SEE **4/A6.10**
13. BACK LIGHTED PLUSH CLOCK ASSEMBLY
14. EXPOSED STEEL FRAMING, SEE **STRUCT. DWG'S.**
15. OPENING FOR DUCT PENETRATION THRU ATTIC SLAB, SEE **MECH. DWG'S.**

KEY PLAN

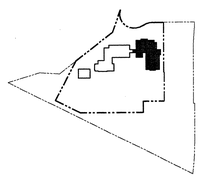

ATTIC PLAN - WEST
SCALE: 1/8" = 1'-0"

1

tBP architecture planning interiors management

tBP/Architecture
1000 Burnett Ave, Suite 140
Concord, CA 94520
ph: 925.246.6419 fx: 925.246.6495

architect

consultant

APPROVED
APPROVED BY THE STATE ARCHITECT
DIVISION OF THE STATE ARCHITECT
OFFICE OF REGULATION SERVICES
APPL NO. 110719
BY
DATE

agency

SAN RAMON VALLEY CENTER

CONTRA COSTA COMMUNITY COLLEGE DISTRICT

SAN RAMON, CALIFORNIA

owner

tBP project number : 20212.00
file name: A-0132_attic.dwg
drawn by: DM checked by:
date: 03-09-04 plot scale: 1:1

Rev:	date:	description:
1	03-29-04	DESIGN CLARIFICATIONS

drawing title: ATTIC PLAN - EAST
building no.:

drawing no.: A1.32
drawing of

© ARCHITECTURE BY PERMISSION ONLY. COPYRIGHT 2003 tBP/ARCHITECTURE

GENERAL NOTES

1. MECHANICAL GRILLES, REGISTERS, EXTERIOR LOUVERS AND ELECTRICAL FIXTURES ARE SHOWN FOR LOCATION PURPOSES ONLY. VERIFY QUANTITY AND SIZES WITH MECHANICAL OR ELECTRICAL DRAWINGS.
2. ALL MECHANICAL, ELECTRICAL, STORAGE AND JANITOR ROOMS TO HAVE GYPSUM BOARD TO UNDERSIDE OF STRUCTURE UNLESS NOTED OTHERWISE.
3. FOR CEILING MATERIALS AND HEIGHTS, SEE FINISH SCHEDULES, SHEETS **9.01 & 9.02**
4. FOR ROOF EAVE HEIGHTS AND DETAILS, SEE SHEETS **A6.10 thru A6.18**

KEYNOTES (NOT ALL KEYNOTES APPLY TO ALL PLANS)

1. LINE OF ROOF OVERHANG ABOVE
2. 2" WIDE EXTRUDED ALUMINUM SOFFIT VENT AS MANUFACTURED BY FRY REGLET CORPORATION, OR APPROVED EQUAL.
3. EXPANSION JOINT IN CEMENT PLASTER, SEE DETAIL **8/3.01**
4. LINE OF PRE-COATED FOAM SHAPE ABOVE
5. ARCHED OPENING (CEMENTITIOUS COATED FOAM SHAPE), SEE DETAIL **16/3.01**
6. CONTINUOUS GUTTER, SEE ROOF PLANS
7. ARCHED GYP. BD. SOFFIT
8. EXPANSION JOINT IN GYP. BD. CEILING, SEE DETAIL **13/9.50**
9. EXPOSED CORRUGATED METAL ROOFING.
10. KILN HOOD, SEE MECH. DWGS. **M1.4**
11. RECESSED PROJECTOR SCREEN RECEPTOR
12. ARCHED CEMENT PLASTER SOFFIT

REFLECTED CEILING PLAN LEGEND

MATERIALS:

- 2X4 ACOUSTICAL TILE CEILING, (10'-0" A.F.F. U.N.O) SEE SHEET **5.01**
- CEMENT PLASTER FINISH, (12'-0" A.F.F. U.N.O.) "C.J." = CONTROL JOINT, SEE SHEET **5.02** FOR SUSPENDED PLASTER DETAILS
- GYPSUM BD FINISH. SEE SHEET **5.02**
- EXPOSED METAL DECK. (OPEN TO STRUCTURE ABOVE)

LIGHTING:

- WALL MOUNTED EXTERIOR LIGHT FIXTURE
- RECESSED CEILING MOUNTED FIXTURE
- INCANDESCENT FIXTURE
- PENDANT MOUNT FLUORESCENT LIGHTING FIXTURE, LENGTH AS INDICATED
- 1X4 FLUORESCENT FIXTURE
- 2X4 FLUORESCENT FIXTURE
- WALL MOUNTED FLUORESCENT
- WALL MOUNTED LINEAR VANITY FIXTURE
- 4' STRIP FLUORESCENT FIXTURE
- 8' STRIP FLUORESCENT FIXTURE
- TRACK MOUNTED LIGHT FIXTURES
- EXIT SIGN

MECHANICAL:

- MECHANICAL REGISTER RETURN
- MECHANICAL REGISTER SUPPLY
- MECHANICAL REGISTER EXHAUST
- EXHAUST FAN
- HR HOSE REEL

OTHER:

- FLOOR HATCH AND LADDER
- PM PROJECTOR MOUNT, COORDINATE EXACT LOCATIONS W/ OWNER, SEE DETAIL **14 & 15/5.01** (PROJECTOR N.I.C.)
- MM MONITOR MOUNT, COORDINATE EXACT LOCATIONS W/ OWNER, SEE DETAIL **16/5.01** (MONITOR N.I.C.)
- DS DOWNSPOUT
- S SURFACE MOUNTED SPEAKER BY OWNER (N.I.C.)

LABORATORY SPECIFIC: (SEE **LAB** DWG.S)

- LABORATORY RELATED ROOM, SEE **"LF" SERIES DWG'S.**
- OSC OVERHEAD SERVICE CARRIER, SEE **"LF" SERIES DWG'S.** (AND LAB DETAIL **18/LF3.3**)
- PDE PIPE DROP ENCLOSURE, SEE **"LF" SERIES DWG'S.** (AND LAB DETAILS **2 & 3/LF3.3**)

WALL LEGEND:

- = 1-HOUR FIRE RATED SHAFT WALL
- = 1-HOUR FIRE RATED EXIT COURT WALL (PROTECTED TO UNDERSIDE OF STRUCTURE)
- = 1-HOUR FIRE RATED CORRIDOR
- = 2-HOUR FIRE RATED HORIZONTAL EXIT
- = 1-HOUR FIRE RATED WALL
- = STEEL BRACE FRAME, SEE
- = MASONRY VENEER
- = MASONRY WALL CONSTRUCTION

KEY PLAN

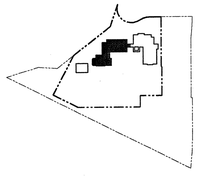

tBP architecture planning interiors management

tBP/Architecture
1000 Burnett Ave, Suite 140
Concord, CA 94520
ph. 925.246.6419 fx. 925.246.6495

architect

consultant

agency

APPROVED
DEPARTMENT OF GENERAL SERVICES
DIV. OF THE STATE ARCHITECT
OFFICE OF REGIONAL PROJECTS
APP. NO. 10-7119
BY: [signature]
DATE: 6-9-04

owner

SAN RAMON VALLEY CENTER
CONTRA COSTA COMMUNITY COLLEGE DISTRICT
SAN RAMON, CALIFORNIA

tBP project number : 20212.00
file name: A-0211_lrcp.dwg
drawn by: DM checked by:
date: 03-09-04 plot scale: 1:1

Rev.	date:	description:
1	05-26-04	DESIGN CLARIFICATIONS

drawing title: building no:
FIRST FLOOR - WEST REFLECTED CEILING PLAN

drawing no:
A2.11
drawing of

FIRST FLOOR - WEST - REFLECTED CEILING PLAN
SCALE: 1/8" = 1'-0"

1

north

0 4' 8' 16'

BE ADVISED THAT, DETERMINED TO ENJOY, WHAT YOU DO FOR A LIVE

GENERAL NOTES

1. MECHANICAL GRILLES, REGISTERS, EXTERIOR LOUVERS AND ELECTRICAL FIXTURES ARE SHOWN FOR LOCATION PURPOSES ONLY. VERIFY QUANTITY AND SIZES WITH MECHANICAL OR ELECTRICAL DRAWINGS.
2. ALL MECHANICAL, ELECTRICAL, STORAGE AND JANITOR ROOMS TO HAVE GYPSUM BOARD TO UNDERSIDE OF STRUCTURE UNLESS NOTED OTHERWISE.
3. FOR CEILING MATERIALS AND HEIGHTS, SEE FINISH SCHEDULES, SHEETS **9.01 & 9.02**
4. FOR ROOF EAVE HEIGHTS AND DETAILS, SEE SHEETS **A6.10 thru A6.18**

KEYNOTES (NOT ALL KEYNOTES APPLY TO ALL PLANS)

1. LINE OF ROOF OVERHANG ABOVE
2. 2" WIDE EXTRUDED ALUMINUM SOFFIT VENT AS MANUFACTURED BY FRY REGLET CORPORATION, OR APPROVED EQUAL.
3. EXPANSION JOINT IN CEMENT PLASTER, SEE DETAIL **8/3.01**
4. LINE OF PRE-COATED FOAM SHAPE ABOVE
5. ARCHED OPENING (CEMENTITIOUS COATED FOAM SHAPE), SEE DETAIL **16/3.01**
6. CONTINUOUS GUTTER, SEE ROOF PLANS
7. ARCHED GYP. BD. SOFFIT
8. EXPANSION JOINT IN GYP. BD. CEILING, SEE DETAIL **13/9.50**
9. EXPOSED CORRUGATED METAL ROOFING.
10. KILN HOOD, SEE MECH. DWGS. **M11.4**
11. RECESSED PROJECTOR SCREEN RECEPTOR
12. ARCHED CEMENT PLASTER SOFFIT

REFLECTED CEILING PLAN LEGEND

MATERIALS:

- 2X4 ACOUSTICAL TILE CEILING, (10'-0" A.F.F. U.N.O.) SEE SHEET **5.01**
- CEMENT PLASTER FINISH. (12'-0" A.F.F. U.N.O.) "C.J." = CONTROL JOINT., SEE SHEET **5.02** FOR SUSPENDED PLASTER DETAILS
- GYPSUM BD. FINISH. SEE SHEET **5.02**
- EXPOSED METAL DECK. (OPEN TO STRUCTURE ABOVE)

LIGHTING:

- WALL MOUNTED EXTERIOR LIGHT FIXTURE
- RECESSED CEILING MOUNTED FIXTURE
- INCANDESCENT FIXTURE
- PENDANT MOUNT FLUORESCENT LIGHTING FIXTURE, LENGTH AS INDICATED
- 1X4 FLUORESCENT FIXTURE
- 2X4 FLUORESCENT FIXTURE
- WALL MOUNTED FLUORESCENT
- WALL MOUNTED LINEAR VANITY FIXTURE
- 4' STRIP FLUORESCENT FIXTURE
- 8' STRIP FLUORESCENT FIXTURE
- TRACK MOUNTED LIGHT FIXTURES
- EXIT SIGN

MECHANICAL:

- MECHANICAL REGISTER RETURN
- MECHANICAL REGISTER SUPPLY
- MECHANICAL REGISTER EXHAUST
- EXHAUST FAN
- HR — HOSE REEL

OTHER:

- FLOOR HATCH AND LADDER
- PM — PROJECTOR MOUNT, COORDINATE EXACT LOCATIONS W/ OWNER, SEE DETAIL **14 & 15/5.01** (PROJECTOR N.I.C.)
- MM — MONITOR MOUNT, COORDINATE EXACT LOCATIONS W/ OWNER, SEE DETAIL **16/5.01** (MONITOR N.I.C.)
- DS — DOWNSPOUT
- (S) — SURFACE MOUNTED SPEAKER BY OWNER (N.I.C.)

LABORATORY SPECIFIC: (SEE **LAB** DWG.S)

- ★ LABORATORY RELATED ROOM, SEE **"LF" SERIES DWG'S.**
- OSC — OVERHEAD SERVICE CARRIER, SEE **"LF" SERIES DWG'S.** (AND LAB DETAIL **18/LF3.3**)
- PDE — PIPE DROP ENCLOSURE, SEE **"LF" SERIES DWG'S.** (AND LAB DETAILS **2 & 3/LF3.3**)

KEY PLAN

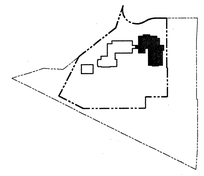

WALL LEGEND:

- = 1-HOUR FIRE RATED SHAFT WALL
- = 1-HOUR FIRE RATED EXIT COURT WALL (PROTECTED TO UNDERSIDE OF STRUCTURE)
- = 1-HOUR FIRE RATED CORRIDOR
- = 2-HOUR FIRE RATED HORIZONTAL EXIT
- = 1-HOUR FIRE RATED WALL
- = STEEL BRACE FRAME, SEE
- = MASONRY VENEER
- = MASONRY WALL CONSTRUCTION

MATCH LINE SEE SHEET A2.11

MATCH LINE SEE SHEET A2.11

FIRST FLOOR - EAST - REFLECTED CEILING PLAN | 1

SCALE: 1/8" = 1'-0"

0 4' 8' 16'

north

tBP architecture planning interiors management

tBP/Architecture
1000 Burnett Ave, Suite 140
Concord, CA 94520
ph. 9252466419 fx. 9252466495

LICENSED ARCHITECT — TERRENCE M. VINCENTI — No. C-19885 — RENEWAL 08/31/05 — STATE OF CALIFORNIA

architect

consultant

APPROVED DEPARTMENT OF STATE ARCHITECT DIV. OF THE STATE ARCHITECT OFFICE OF REGIONAL PROJECTS
APPL. NO. 10219
ACTION BY: [signature]
DATE: 6-4-04

agency

SAN RAMON VALLEY CENTER

CONTRA COSTA COMMUNITY COLLEGE DISTRICT

SAN RAMON, CALIFORNIA

owner

tBP project number :	20212.00
file name:	A-0212_lrcp.dwg
drawn by: DM	checked by:
date: 03-09-04	plot scale: 1:1

Rev.	date:	description:
1	05-26-04	DESIGN CLARIFICATIONS

drawing title: FIRST FLOOR - EAST REFLECTED CEILING PLAN

building no:

drawing no: A2.12

drawing of

GENERAL NOTES

1. MECHANICAL GRILLES, REGISTERS, EXTERIOR LOUVERS AND ELECTRICAL FIXTURES ARE SHOWN FOR LOCATION PURPOSES ONLY. VERIFY QUANTITY AND SIZES WITH MECHANICAL OR ELECTRICAL DRAWINGS.
2. ALL MECHANICAL, ELECTRICAL, STORAGE AND JANITOR ROOMS TO HAVE GYPSUM BOARD TO UNDERSIDE OF STRUCTURE UNLESS NOTED OTHERWISE.
3. FOR CEILING MATERIALS AND HEIGHTS, SEE FINISH SCHEDULES, SHEETS **9.01 & 9.02**
4. FOR ROOF EAVE HEIGHTS AND DETAILS, SEE SHEETS **A6.10 thru A6.18**

KEYNOTES (NOT ALL KEYNOTES APPLY TO ALL PLANS)

1. LINE OF ROOF OVERHANG ABOVE
2. 2" WIDE EXTRUDED ALUMINUM SOFFIT VENT AS MANUFACTURED BY FRY REGLET CORPORATION, OR APPROVED EQUAL
3. EXPANSION JOINT IN CEMENT PLASTER, SEE DETAIL **8/3.01**
4. LINE OF PRE-COATED FOAM SHAPE ABOVE
5. ARCHED OPENING (CEMENTITIOUS COATED FOAM SHAPE), SEE DETAIL **16/3.01**
6. CONTINUOUS GUTTER, SEE ROOF PLANS
7. ARCHED GYP. BD. SOFFIT
8. EXPANSION JOINT IN GYP. BD. CEILING, SEE DETAIL **13/9.50**
9. EXPOSED CORRUGATED METAL ROOFING.
10. KILN HOOD, SEE MECH. DWGS. **M14**
11. RECESSED PROJECTOR SCREEN RECEPTOR
12. ARCHED CEMENT PLASTER SOFFIT

REFLECTED CEILING PLAN LEGEND

MATERIALS:

- 2X4 ACOUSTICAL TILE CEILING, (H10'-0" A.F.F. U.N.O) SEE SHEET **5.01**
- CEMENT PLASTER FINISH, (H12'-0" A.F.F. U.N.O) "CJ" = CONTROL JOINT, SEE SHEET **5.02** FOR SUSPENDED PLASTER DETAILS
- GYPSUM BD FINISH. SEE SHEET **5.02**
- EXPOSED METAL DECK. (OPEN TO STRUCTURE ABOVE)

LIGHTING:

- WALL MOUNTED EXTERIOR LIGHT FIXTURE
- RECESSED CEILING MOUNTED FIXTURE
- INCANDESCENT FIXTURE
- PENDANT MOUNT FLUORESCENT LIGHTING FIXTURE, LENGTH AS INDICATED
- 1X4 FLUORESCENT FIXTURE
- 2X4 FLUORESCENT FIXTURE
- WALL MOUNTED FLUORESCENT
- WALL MOUNTED LINEAR VANITY FIXTURE
- 4' STRIP FLUORESCENT FIXTURE
- 8' STRIP FLUORESCENT FIXTURE
- TRACK MOUNTED LIGHT FIXTURES
- EXIT SIGN

MECHANICAL:

- MECHANICAL REGISTER RETURN
- MECHANICAL REGISTER SUPPLY
- MECHANICAL REGISTER EXHAUST
- EXHAUST FAN
- HR — HOSE REEL

OTHER:

- FLOOR HATCH AND LADDER
- PM — PROJECTOR MOUNT, COORDINATE EXACT LOCATIONS W/ OWNER, SEE DETAIL **14 & 15/5.01** (PROJECTOR N.I.C.)
- MM — MONITOR MOUNT, COORDINATE EXACT LOCATIONS W/ OWNER, SEE DETAIL **16/5.01** (MONITOR N.I.C.)
- DS — DOWNSPOUT
- SURFACE MOUNTED SPEAKER BY OWNER (N.I.C.)

LABORATORY SPECIFIC (SEE **LAB** DWG.S)

- LABORATORY RELATED ROOM, SEE **"LF" SERIES DWG'S.**
- OSC — OVERHEAD SERVICE CARRIER, SEE **"LF" SERIES DWG'S.** (AND LAB DETAIL **18/LF3.3**)
- PDE — PIPE DROP ENCLOSURE, SEE **"LF" SERIES DWG'S.** (AND LAB DETAILS **2 & 3/LF3.3**)

WALL LEGEND:

- 1-HOUR FIRE RATED SHAFT WALL
- 1-HOUR FIRE RATED EXIT COURT WALL (PROTECTED TO UNDERSIDE OF STRUCTURE)
- 1-HOUR FIRE RATED CORRIDOR
- 2-HOUR FIRE RATED HORIZONTAL EXIT
- 1-HOUR FIRE RATED WALL
- STEEL BRACE FRAME, SEE
- MASONRY VENEER
- MASONRY WALL CONSTRUCTION

KEY PLAN

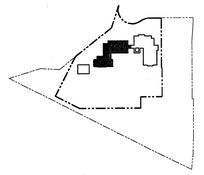

tBP architecture planning interiors management

tBP/Architecture
1000 Burnett Ave, Suite 140
Concord, CA 94520
ph. 9252466495 fx. 9252466495

architect

consultant

agency

APPROVED
PERFORMANCE STAMP
DIVISION OF THE STATE ARCHITECT
OFFICE OF REGULATION SERVICES
APPL. ID 105719
FEB 05
DATE

SAN RAMON VALLEY CENTER

CONTRA COSTA COMMUNITY COLLEGE DISTRICT

SAN RAMON, CALIFORNIA

owner

tBP project number : 20212.00

file name: A-0221_2rcp.dwg

drawn by: DM **checked by:**

date: 03-09-04 **plot scale:** 1:1

Rev:	date:	description:
1	05-26-04	DESIGN CLARIFICATIONS

drawing title: SECOND FLOOR - WEST REFLECTED CEILING PLAN

building no:

drawing no: A2.21

drawing of

SECOND FLOOR - WEST - REFLECTED CEILING PLAN
SCALE: 1/8" = 1'-0"

1

north

BE ABSOLUTELY CERTAIN TO PLOT THIS DWG TO SCALE

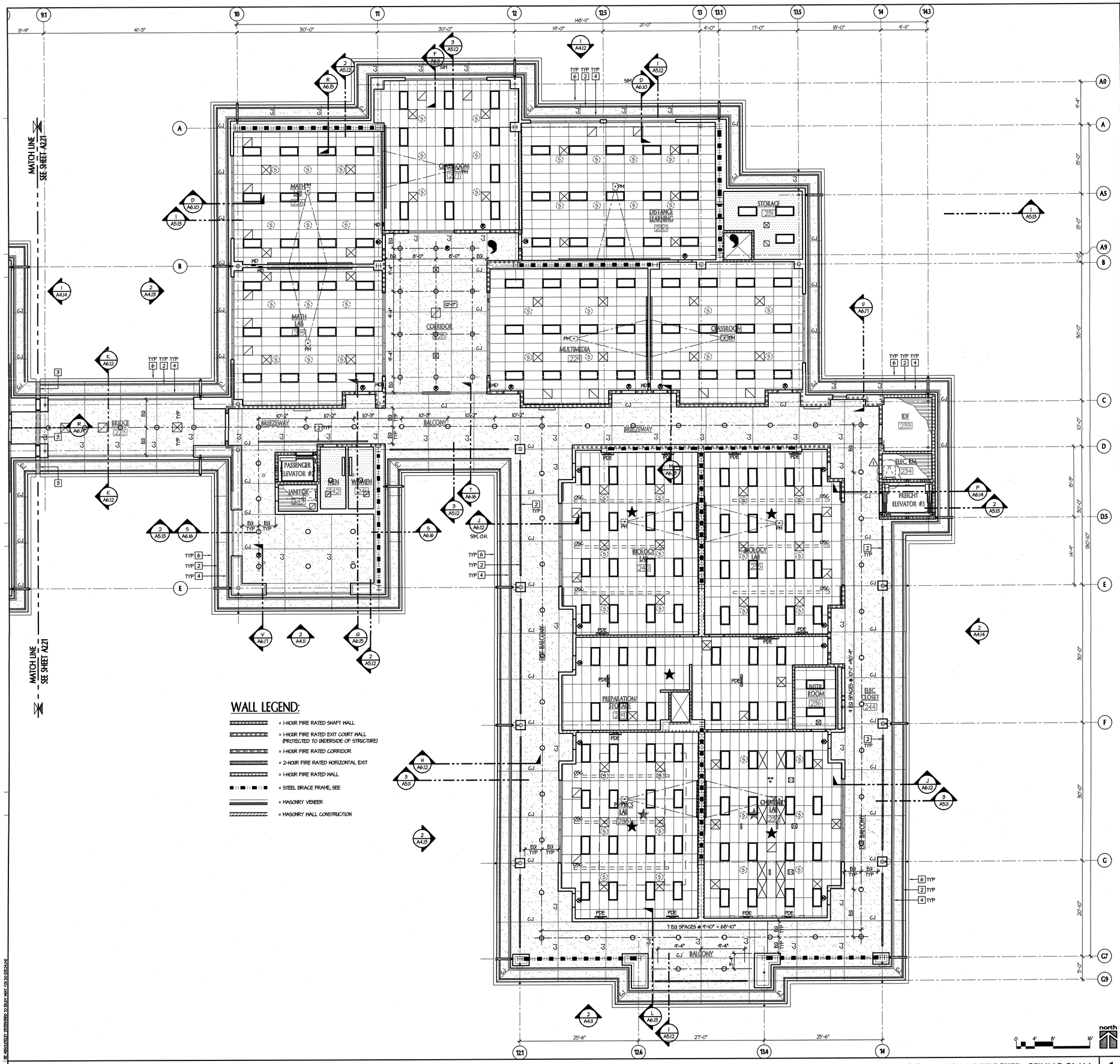

WALL LEGEND:

- = 1-HOUR FIRE RATED SHAFT WALL
- = 1-HOUR FIRE RATED EXIT COURT WALL (PROTECTED TO UNDERSIDE OF STRUCTURE)
- = 1-HOUR FIRE RATED CORRIDOR
- = 2-HOUR FIRE RATED HORIZONTAL EXIT
- = 1-HOUR FIRE RATED WALL
- = STEEL BRACE FRAME, SEE
- = MASONRY VENEER
- = MASONRY WALL CONSTRUCTION

SECOND FLOOR - EAST - REFLECTED CEILING PLAN
SCALE: 1/8" = 1'-0"

1

GENERAL NOTES

1. MECHANICAL GRILLES, REGISTERS, EXTERIOR LOUVERS AND ELECTRICAL FIXTURES ARE SHOWN FOR LOCATION PURPOSES ONLY. VERIFY QUANTITY AND SIZES WITH MECHANICAL OR ELECTRICAL DRAWINGS.
2. ALL MECHANICAL, ELECTRICAL, STORAGE AND JANITOR ROOMS TO HAVE GYPSUM BOARD TO UNDERSIDE OF STRUCTURE UNLESS NOTED OTHERWISE.
3. FOR CEILING MATERIALS AND HEIGHTS, SEE FINISH SCHEDULES, SHEETS **9.01 & 9.02**
4. FOR ROOF EAVE HEIGHTS AND DETAILS, SEE SHEETS **A6.10 thru A6.18**

KEYNOTES (NOT ALL KEYNOTES APPLY TO ALL PLANS)

1. LINE OF ROOF OVERHANG ABOVE
2. 2" WIDE EXTRUDED ALUMINUM SOFFIT VENT AS MANUFACTURED BY FRY REGLET CORPORATION, OR APPROVED EQUAL.
3. EXPANSION JOINT IN CEMENT PLASTER, SEE DETAIL **8/3.01**
4. LINE OF PRE-COATED FOAM SHAPE ABOVE
5. ARCHED OPENING (CEMENTITIOUS COATED FOAM SHAPE), SEE DETAIL **16/3.01**
6. CONTINUOUS GUTTER, SEE ROOF PLANS
7. ARCHED GYP. BD. SOFFIT
8. EXPANSION JOINT IN GYP. BD. CEILING, SEE DETAIL **13/9.50**
9. EXPOSED CORRUGATED METAL ROOFING.
10. KILN HOOD, SEE MECH. DWGS. **M1.4**
11. RECESSED PROJECTOR SCREEN RECEPTOR
12. ARCHED CEMENT PLASTER SOFFIT

REFLECTED CEILING PLAN LEGEND

MATERIALS:

- 2X4 ACOUSTICAL TILE CEILING, (10'-0" A.F.F. U.N.O.) SEE SHEET **5.01**
- CEMENT PLASTER FINISH, (12'-0" A.F.F. U.N.O.) C.J. = CONTROL JOINT, SEE SHEET **5.02** FOR SUSPENDED PLASTER DETAILS
- GYPSUM BD FINISH. SEE SHEET **5.02**
- EXPOSED METAL DECK (OPEN TO STRUCTURE ABOVE)

LIGHTING

- WALL MOUNTED EXTERIOR LIGHT FIXTURE
- RECESSED CEILING MOUNTED FIXTURE
- INCANDESCENT FIXTURE
- PENDANT MOUNT FLUORESCENT LIGHTING FIXTURE, LENGTH AS INDICATED
- 1X4 FLUORESCENT FIXTURE
- 2X4 FLUORESCENT FIXTURE
- WALL MOUNTED FLUORESCENT
- WALL MOUNTED LINEAR VANITY FIXTURE
- 4' STRIP FLUORESCENT FIXTURE
- 8' STRIP FLUORESCENT FIXTURE
- TRACK MOUNTED LIGHT FIXTURES
- EXIT SIGN

MECHANICAL:

- MECHANICAL REGISTER RETURN
- MECHANICAL REGISTER SUPPLY
- MECHANICAL REGISTER EXHAUST
- EXHAUST FAN
- HR HOSE REEL

OTHER:

- FLOOR HATCH AND LADDER
- PM PROJECTOR MOUNT, COORDINATE EXACT LOCATIONS W/ OWNER, SEE DETAIL **14 & 15/5.01** (PROJECTOR N.I.C.)
- MM MONITOR MOUNT, COORDINATE EXACT LOCATIONS W/ OWNER, SEE DETAIL **16/5.01** (MONITOR N.I.C.)
- DS DOWNSPOUT
- SURFACE MOUNTED SPEAKER BY OWNER (N.I.C.)

LABORATORY SPECIFIC: (SEE **LAB** DWGS.)

- LABORATORY RELATED ROOM, SEE **"LF" SERIES DWG'S.**
- OSC OVERHEAD SERVICE CARRIER, SEE **"LF" SERIES DWG'S.** (AND LAB DETAIL **18/LF3.3**)
- PDE PIPE DROP ENCLOSURE, SEE **"LF" SERIES DWG'S.** (AND LAB DETAILS **2 & 3/LF3.3**)

KEY PLAN

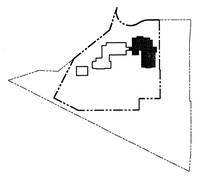

tBP architecture planning interiors management
tBP/Architecture
1000 Burnett Ave, Suite 140
Concord, CA 94520
ph. 9252466495 fx. 9252466495

architect

consultant

agency

SAN RAMON VALLEY CENTER

CONTRA COSTA COMMUNITY COLLEGE DISTRICT

SAN RAMON, CALIFORNIA

owner

tBP project number : 20212.00

file name: A-0222_2rcp.dwg

drawn by: DM checked by:

date: 03-01-04 plot scale: 1:1

Rev.	date:	description:
5	05-26-04	DESIGN CLARIFICATIONS

drawing title: SECOND FLOOR - EAST REFLECTED CEILING PLAN

building no:

drawing no: A2.22

drawing of

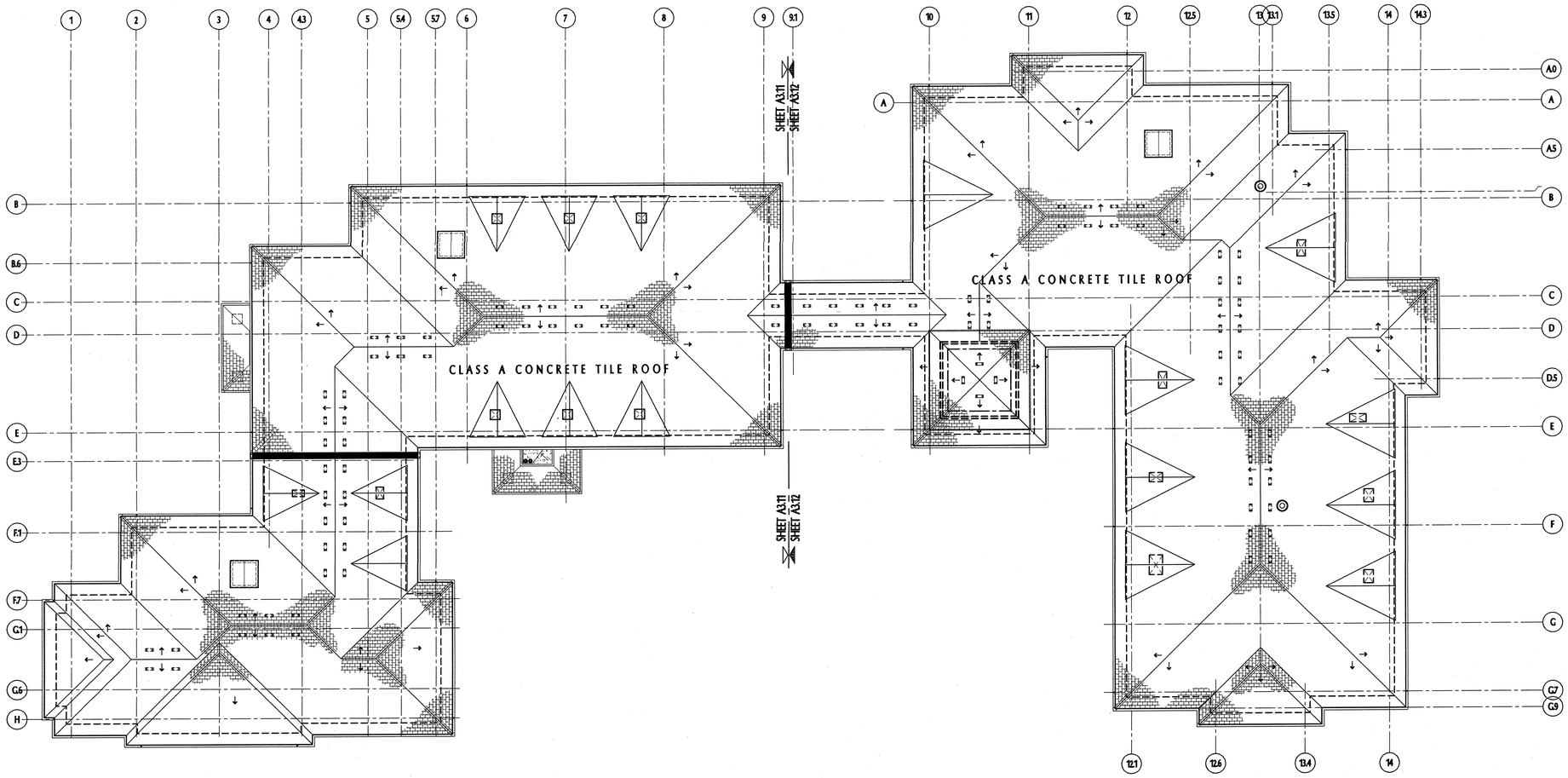

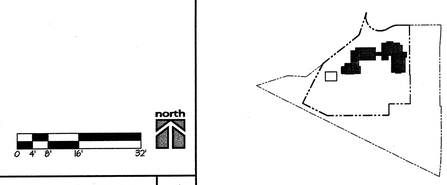

ROOF PLAN - OVERALL
SCALE: 1/16" = 1'-0"

1

NOTES

KEY PLAN

tBP
architecture
planning
interiors
management

tBP/Architecture
1000 Burnett Ave, Suite 140
Concord, CA 94520
ph: 925.246.6419 fx: 925.246.6495

architect

consultant

agency

SAN RAMON VALLEY CENTER

CONTRA COSTA COMMUNITY COLLEGE DISTRICT

SAN RAMON, CALIFORNIA

owner

tBP project number : 20212.00

file name: A-0310_roof.dwg

drawn by: DM checked by:

date: 03-09-04 plot scale: 1:1

Rev:	date:	description:

drawing title: building no.:

ROOF PLAN - OVERALL

drawing no.:

A3.10

drawing of

GENERAL NOTES

1. PROVIDE PREFINISHED GSM GUTTERS AND DOWNSPOUTS AS INDICATED ON PLANS (AND AT LEAST ONE DOWNSPOUT FOR EVERY 40'-0" OF GUTTER). CONNECT ALL DOWNSPOUTS TO STORM DRAINAGE SYSTEM. ALL GUTTERS TO BE INSTALLED LEVEL.
2. ALL ROOF SLOPES ARE TO BE 6:12 UNLESS NOTED OTHERWISE.
3. FOR TYPICAL HIP AND RIDGE CONDITIONS SEE **DETAIL 15/7.01**
4. FOR TYPICAL VALLEY CONDITIONS SEEL **DETAIL 9/7.01**

KEYNOTES

1. CONCRETE ROOF TILE SYSTEM, SEE **DETAIL 18A/3.01, TYP. U.N.O.**
2. 8'-0" X 8'-0" ROOF SCUTTLE
3. CONTINUOUS GUTTER, SEE GENERAL NOTE #1 AND **DETAIL 6/7.01**
4. (NOT USED)
5. FUME HOOD EXHAUST SYSTEM, PAINT TO MATCH ADJACENT ROOF MATERIAL*, SEE MECHANICAL DRAWINGS FOR ADDITIONAL INFO.
6. FUME HOOD EXHAUST PENETRATION FOR FUTURE SYSTEM, SEE KEYNOTE #5 ABOVE.
7. EXPANSION JOINT - SEE **DETAIL 20/7.02**
8. LINE OF WALL OR COLUMN BELOW (SHOWN "DASHED")
9. FOR ADDITIONAL CLOCK TOWER INFO. NOT SHOWN OR OTHERWISE NOTED THERE, SEE ATTIC PLAN, **SHEET A1.32**
10. LINE OF MECHANICAL PENETRATION IN MAIN ROOF BELOW (SHOWN "DASHED") FOR ADDITIONAL INFO., SEE **MECH. DWG'S.**
11. BUTT TYPE GUTTER EXPANSION JOINT ALLOW 8" MOVEMENT
12. FLOOR HATCH

LEGEND

- ROOF DOWN SLOPE
- DS DOWNSPOUT, SEE GENERAL NOTE #1
- 118 SQUARE INCH CLOAKED VENT TILE ASSEMBLY, LOCATE APPROXIMATELY 5'-0" FROM RIDGE AT APPROXIMATELY 8'-0" O.C. UNLESS INDICATED OTHERWISE. (EXACT PLACEMENT IS DEPENDENT ON ACTUAL CONCRETE TILE COURSING LOCATIONS). PAINT TO MATCH ADJACENT CONCRETE ROOF TILES.
- LI LOUVER, SEE SCHEDULE SHEET **8.80**

DORMER SCHEDULE

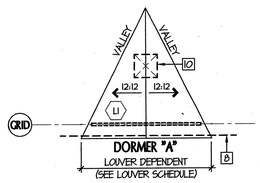

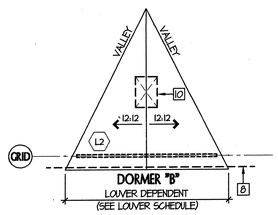

KEY PLAN

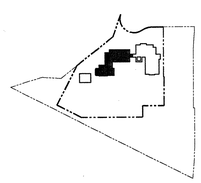

tBP
architecture
planning
interiors
management

tBP/Architecture
1000 Burnett Ave, Suite 140
Concord, CA 94520
ph: 925.246.6419 fx: 925.246.6495

architect

consultant

agency

SAN RAMON VALLEY CENTER

CONTRA COSTA COMMUNITY COLLEGE DISTRICT

SAN RAMON, CALIFORNIA

owner

tBP project number : 20212.00
file name: A-0311_roof.dwg
drawn by: DM checked by:
date: 03-04-04 plot scale: 1:1

Rev:	date:	description:
1	03-24-04	DESIGN CLARIFICATIONS

drawing title: ROOF PLAN - WEST
building no:

drawing no: A3.11
drawing of

ROOF PLAN - WEST
SCALE: 1/8" = 1'-0"
1

north

GENERAL NOTES

1. PROVIDE PREFINISHED 6SM GUTTERS AND DOWNSPOUTS AS INDICATED ON PLANS (AND AT LEAST ONE DOWNSPOUT FOR EVERY 40'-0" OF GUTTER). CONNECT ALL DOWNSPOUTS TO STORM DRAINAGE SYSTEM. ALL GUTTERS TO BE INSTALLED LEVEL.
2. ALL ROOF SLOPES ARE TO BE 6:12 UNLESS NOTED OTHERWISE.
3. FOR TYPICAL HIP AND RIDGE CONDITIONS SEE **DETAIL 15/7.01**
4. FOR TYPICAL VALLEY CONDITIONS SEEL **DETAIL 9/7.01**

KEYNOTES

1. CONCRETE ROOF TILE SYSTEM, SEE **DETAIL 18A/3.01, TYP. U.N.O.**
2. 8'-0" X 8'-0" ROOF SCUTTLE
3. CONTINUOUS GUTTER, SEE GENERAL NOTE #1 AND **DETAIL 6/7.01**
4. (NOT USED)
5. FUME HOOD EXHAUST SYSTEM, PAINT TO MATCH ADJACENT ROOF MATERIAL*, SEE MECHANICAL DRAWINGS FOR ADDITIONAL INFO.
6. FUME HOOD EXHAUST PENETRATION FOR FUTURE SYSTEM, SEE KEYNOTE #5 ABOVE.
7. EXPANSION JOINT - SEE **DETAIL 20/7.02**
8. LINE OF WALL OR COLUMN BELOW (SHOWN "DASHED")
9. FOR ADDITIONAL CLOCK TOWER INFO. NOT SHOWN OR OTHERWISE NOTED THERE, SEE ATTIC PLAN. **SHEET A1.32**
10. LINE OF MECHANICAL PENETRATION IN MAIN ROOF BELOW (SHOWN "DASHED") FOR ADDITIONAL INFO., SEE **MECH. DWG'S.**
11. BUTT TYPE GUTTER EXPANSION JOINT ALLOW 8" MOVEMENT
12. FLOOR HATCH

LEGEND

- ROOF DOWN SLOPE
- DS DOWNSPOUT, SEE GENERAL NOTE #1
- 118 SQUARE INCH CLOAKED VENT TILE ASSEMBLY, LOCATE APPROXIMATELY 5'-0" FROM RIDGE AT APPROXIMATELY 8'-0" O.C. UNLESS INDICATED OTHERWISE. (EXACT PLACEMENT IS DEPENDENT ON ACTUAL CONCRETE TILE COURSING LOCATIONS). PAINT TO MATCH ADJACENT CONCRETE ROOF TILES.
- U LOUVER, SEE SCHEDULE SHEET **8.80**

DORMER SCHEDULE

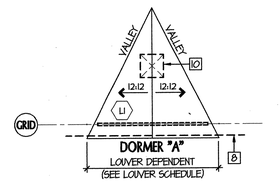

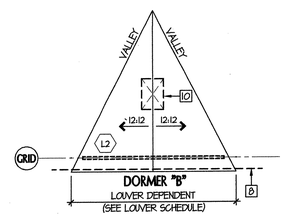

KEY PLAN

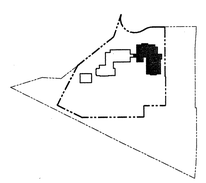

tBP architecture planning interiors management

tBP/Architecture
1000 Burnett Ave, Suite 140
Concord, CA 94520
ph: 925.246.6419 fx: 925.246.6495

architect

consultant

APPROVED
CONTRA COSTA COUNTY
OFFICE OF REVISION SERVICES
APPROVAL NO. 120719
ACCT. 03-4-64
DATE: 6-4-04

agency

SAN RAMON VALLEY CENTER

CONTRA COSTA COMMUNITY COLLEGE DISTRICT

SAN RAMON, CALIFORNIA

owner

tBP project number :	20212.00
file name:	A-0312_roof.dwg
drawn by: DM	checked by:
date: 03-09-04	plot scale: 1:1

Rev:	date:	description:
1	03-29-04	DESIGN CLARIFICATIONS

drawing title: ROOF PLAN - EAST

building no:

drawing no: A3.12

drawing of

DO NOT SCALE PLANS. DIMENSIONS TO BE VERIFIED IN FIELD. ANY VARIATIONS SHALL BE REPORTED TO ARCHITECT BEFORE PROCEEDING WITH WORK.

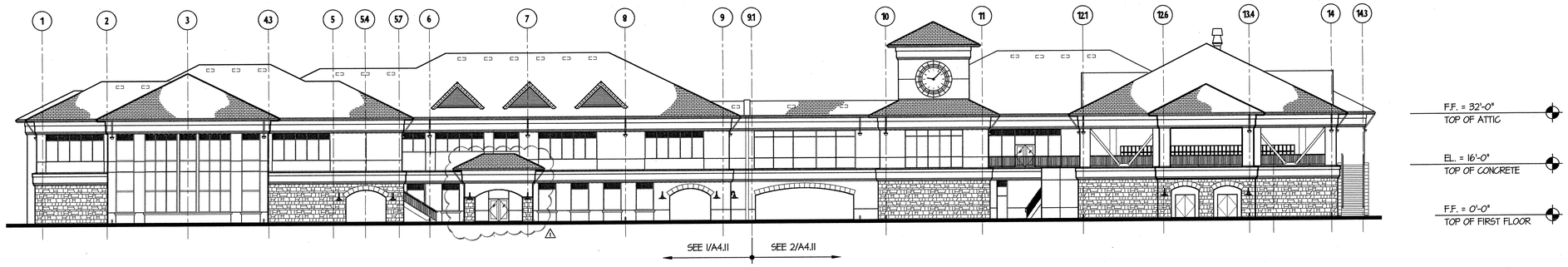

0 8' 16' 32'

SOUTH ELEVATION 1
SCALE: 1/16"= 1'-0"

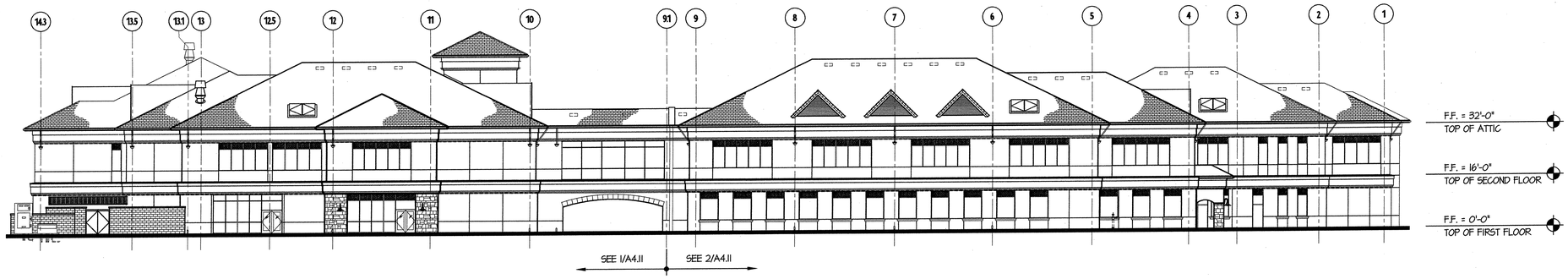

NOTE: FOR ENLARGED ELEVATION
SEE DETAIL 1 & 2/ A4.12

0 8' 16' 32'

NORTH ELEVATION 2
SCALE: 1/16"= 1'-0"

tBP
architecture
planning
interiors
management

tBP/Architecture
1000 Burnett Ave, Suite 140
Concord, CA 94520
ph: 925.246.6419 fx: 925.246.6495

architect

consultant

APPROVED
"CONFORMING STAMP
DIV. OF THE STATE ARCHITECT
OFFICE OF REGULATION SERVICES
APPL. NO. 105719
FILE
AC
DATE 6-9-04

agency

SAN RAMON VALLEY CENTER

CONTRA COSTA COMMUNITY COLLEGE DISTRICT

SAN RAMON, CALIFORNIA

owner

tBP project number : 20212.00

file name: A-0410_exte1.dwg

drawn by: PV checked by:

date: 03-09-04 plot scale: 1:1

Rev.	date:	description:
1	05-26-04	DESIGN CLARIFICATIONS

drawing title: building no:

EXTERIOR ELEVATION

drawing no:

A4.10

drawing of

27

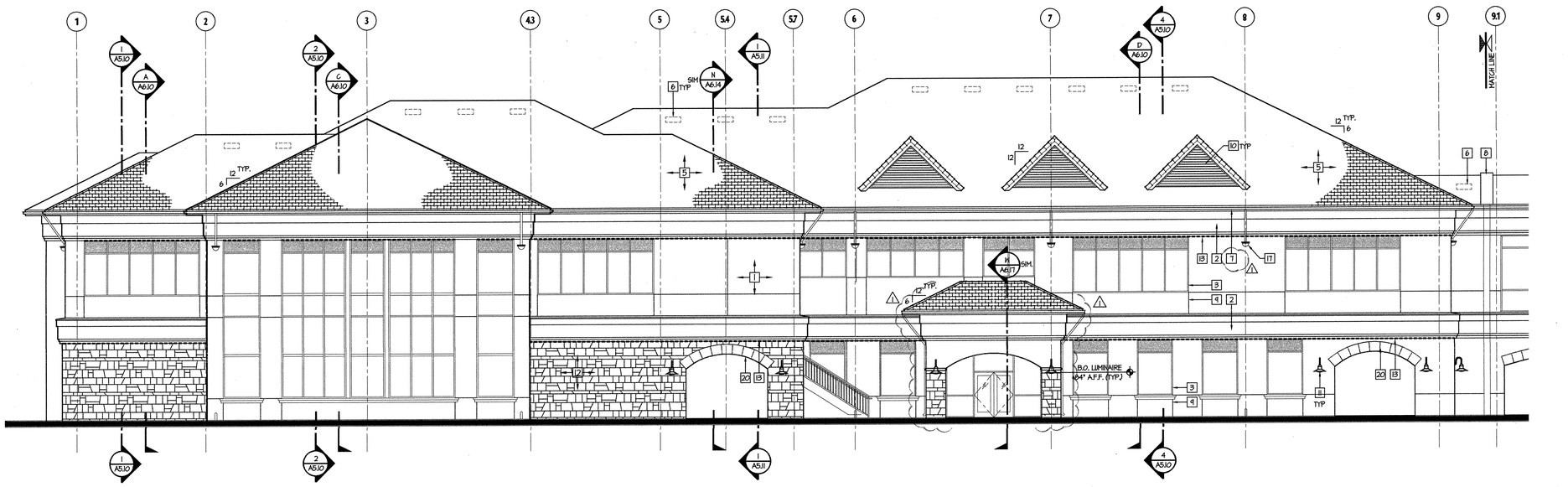

SOUTH ELEVATION
SCALE: 1/8"= 1'-0"

1

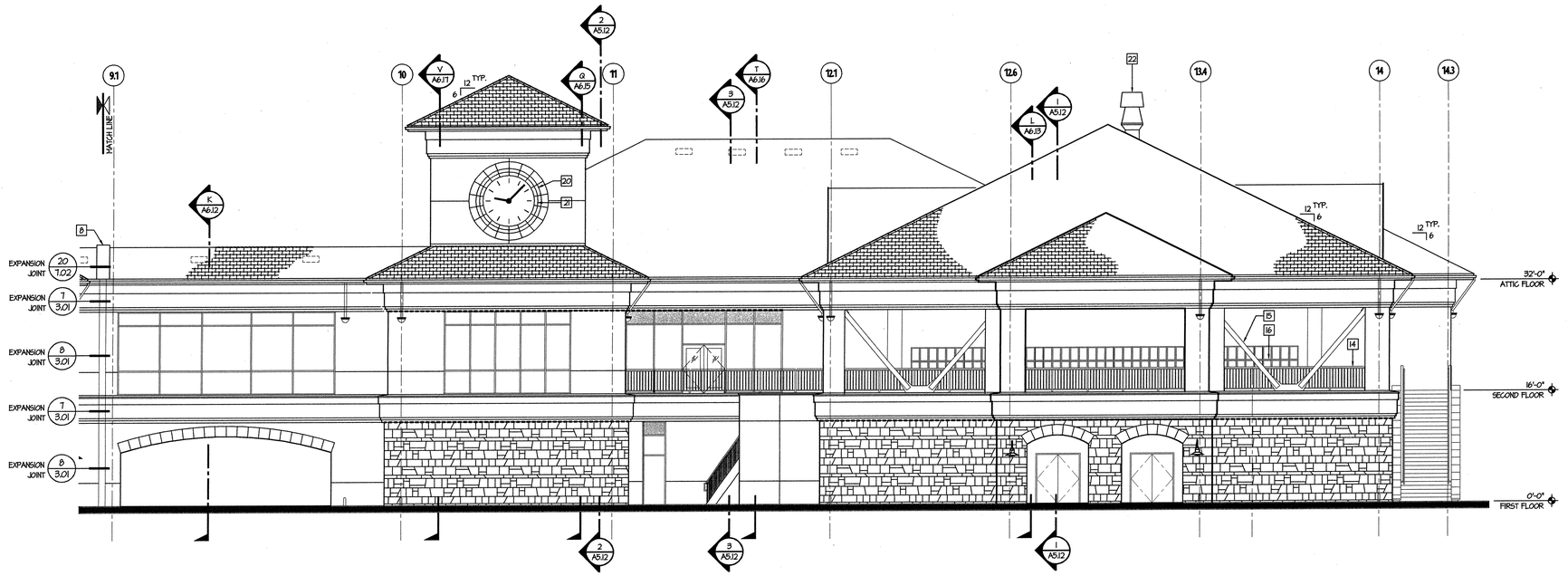

SOUTH ELEVATION
SCALE: 1/8"= 1'-0"

2

KEY NOTES

1. CEMENT PLASTER FINISH (TYPICAL EXTERIOR FINISH U.N.O.)
2. PRE-COATED ARCHITECTURAL FOAM SHAPE W/ CEMENT PLASTER FINISH COAT, SEE DETAILS **1 & 2/3.01**
3. WINDOW SYSTEM, SEE FLOOR PLAN AND WINDOW SCHEDULES
4. DOOR, SEE FLOOR PLAN AND DOOR SCHEDULES
5. CONCRETE TILE SHAKE ROOF SYSTEM, SEE ROOF PLANS
6. ROOF VENT, SEE ROOF PLANS
7. CONTINUOUS GUTTER SYSTEM, SEE ROOF PLANS
8. EXPANSION JOINT IN ROOF ASSEMBLY, SEE ROOF PLANS AND **20/7.02**
9. CONTROL JOINT IN CEMENT PLASTER WALL FINISH
10. METAL DORMER LOUVERS, SEE ATTIC PLANS AD SCHEDULES
11. EXTERIOR MOUNTED DECORATIVE LIGHT FIXTURE. MOUNT AT HEIGHT INDICATED. SEE ELECTRICAL DRAWINGS FOR ADDITIONAL INFO.
12. STONE VENEER SYSTEM, SEE "EXTERIOR WALL ASSEMBLIES" AND "STONE VENEER NOTE", DETAIL **9/3.01**
13. CONTINUOUS COMPENSATION JOINT, SEE BUILDING AND WALL SECTIONS AND DETAIL **6/3.01**
14. METAL GUARDRAIL SYSTEM - PAINT FINISH, SEE DETAIL **18 & 19/10.01**
15. EXPOSED STEEL BRACE FRAME SYSTEM, PAINT FINISH. SEE STRUCTURAL DRAWINGS
16. WALL MOUNTED LOCKER SYSTEM (SHOWN "BEYOND")
17. DOWN SPOUT AND COLLECTOR HEAD SYSTEM, PAINT FINISH. SEE ROOF PLANS.
18. PRE-CAST CONCRETE WALL CAP
19. SPLIT FACE CMU WALL SYSTEM
20. CEMENTITIOUS COATED / POLYSTYRENE BASED ARCH TRIM, SEE **16/3.01**
21. BACK-LIGHTED FLUSH CLOCK ASSEMBLY
22. FUME HOOD EXHAUST FLUE SYSTEM. SEE ROOF PLAN AND MECHANICAL DRAWINGS
23. ROOF MOUNTED EQUIPMENT ACCESS HATCH, SEE ROOF PLAN
24. (E) DOUBLE DETECTOR CHECK ASSEMBLY/FIRE DEPT. CONNECTION

TYPICAL ARCHED OPENINGS

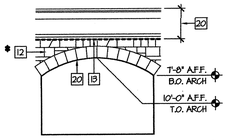

OPENINGS GREATER THAN 10'-0" IN WIDTH

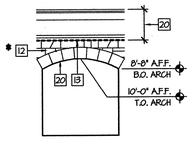

OPENINGS 10'-0" OR LESS IN WIDTH

NOTE:
* ALL STONE VENEER APPLIED DIRECTLY OVER PEDESTRIAN OPENINGS (WHERE OCCURS) TO BE MECHANICALLY FASTENED PER **CBC 1403.A.5** AND DETAIL **9/3.01**

NO STONE VENEER IS TO BE APPLIED OVER 12'-0" ABOVE FINISH FLOOR

tBP
architecture
planning
interiors
management

LICENSED ARCHITECT RICHARD A. KIRBY LIC. C-14885 STATE OF CALIFORNIA

tBP/Architecture
1000 Burnett Ave. Suite 140
Concord, CA 94520
ph: 925.246.6419 fx: 925.246.6495

architect

consultant

APPROVED
DEPARTMENT OF STATE ARCHITECT
DIV. OF THE STATE ARCHITECT
OFFICE OF REGULATION SERVICES
APPL NO 109178
DATE 6-14-05

agency

SAN RAMON VALLEY CENTER

CONTRA COSTA COMMUNITY COLLEGE DISTRICT

SAN RAMON, CALIFORNIA

owner

tBP project number : 20212.00
file name: A-041I_exte1.dwg
drawn by: DM checked by:
date: 03-09-04 plot scale: 1:1

Rev:	date:	description:
1	03-29-04	DESIGN CLARIFICATIONS

drawing title: EXTERIOR ELEVATION - SOUTH

building no:

drawing no: A4.11

drawing of

THE ABSOLUTELY DETERMINED TO ENJOY WHAT YOU DO 925.246.6419

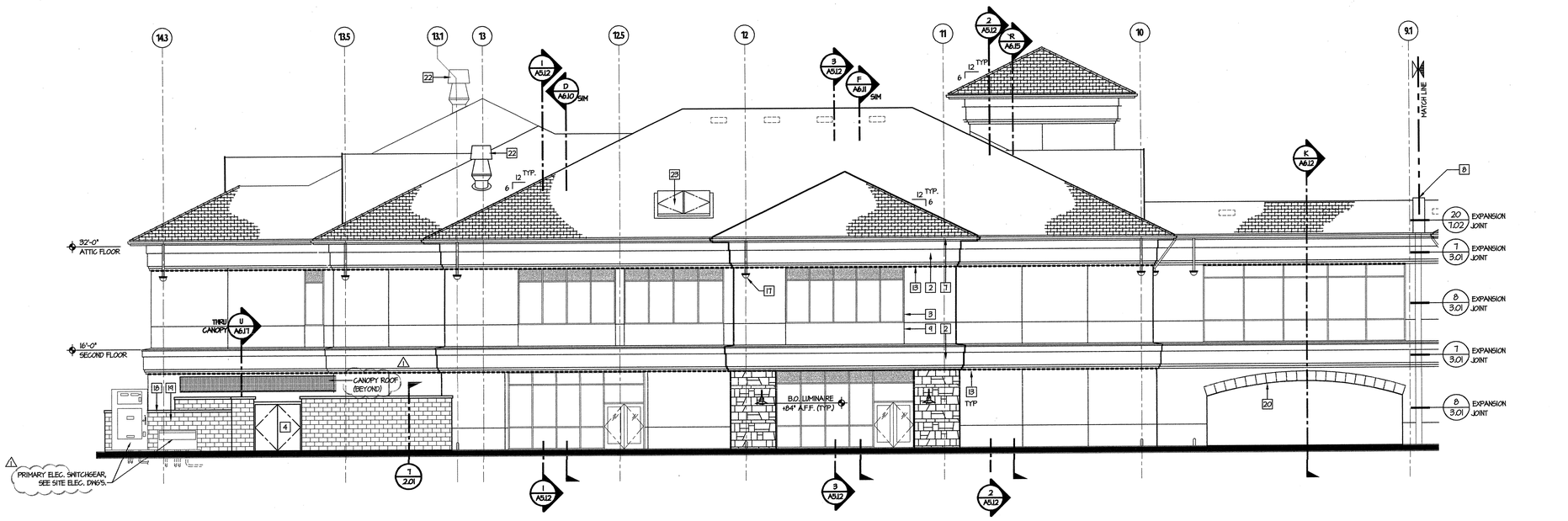

NORTH ELEVATION
SCALE: 1/8" = 1'-0"

1

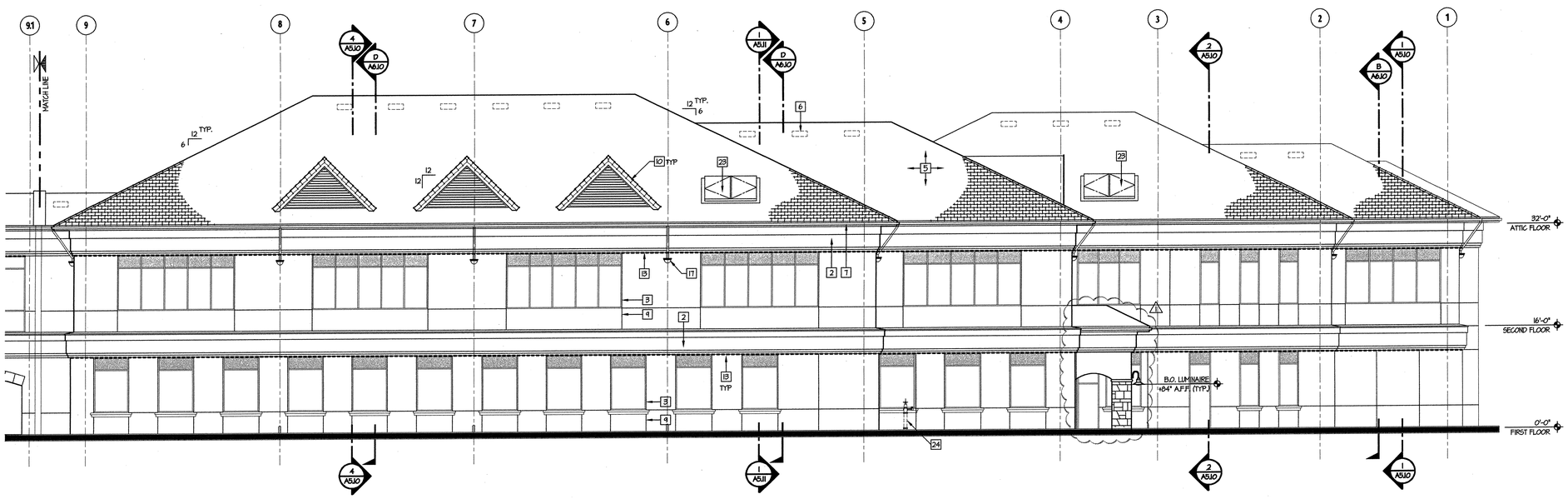

NORTH ELEVATION
SCALE: 1/8" = 1'-0"

2

KEY NOTES

1. CEMENT PLASTER FINISH (TYPICAL EXTERIOR FINISH U.N.O.)
2. PRE-COATED ARCHITECTURAL FOAM SHAPE W/ CEMENT PLASTER FINISH COAT, SEE DETAILS **1 & 2/3.01**
3. WINDOW SYSTEM, SEE FLOOR PLAN AND WINDOW SCHEDULES
4. DOOR, SEE FLOOR PLAN AND DOOR SCHEDULES
5. CONCRETE TILE SHAKE ROOF SYSTEM, SEE ROOF PLANS
6. ROOF VENT, SEE ROOF PLANS
7. CONTINUOUS GUTTER SYSTEM, SEE ROOF PLANS
8. EXPANSION JOINT IN ROOF ASSEMBLY, SEE ROOF PLANS AND **20/7.02**
9. CONTROL JOINT IN CEMENT PLASTER WALL FINISH
10. METAL DORMER LOUVERS, SEE ATTIC PLANS AD SCHEDULES
11. EXTERIOR MOUNTED DECORATIVE LIGHT FIXTURE. MOUNT AT HEIGHT INDICATED. SEE ELECTRICAL DRAWINGS FOR ADDITIONAL INFO.
12. STONE VENEER SYSTEM, SEE "EXTERIOR WALL ASSEMBLIES" AND "STONE VENEER NOTE", DETAIL **9/3.01**
13. CONTINUOUS COMPENSATION JOINT, SEE BUILDINGS AND WALL SECTIONS AND DETAIL **6/3.01**
14. METAL GUARDRAIL SYSTEM - PAINT FINISH, SEE DETAIL **18 & 19/10.01**
15. EXPOSED STEEL BRACE FRAME SYSTEM, PAINT FINISH. SEE STRUCTURAL DRAWINGS
16. WALL MOUNTED LOCKER SYSTEM (SHOWN "BEYOND")
17. DOWN SPOUT AND COLLECTOR HEAD SYSTEM, PAINT FINISH. SEE ROOF PLANS.
18. PRE-CAST CONCRETE WALL CAP
19. SPLIT FACE CMU WALL SYSTEM
20. CEMENTITIOUS COATED / POLYSTYRENE BASED ARCH TRIM, SEE **16/3.01**
21. BACK-LIGHTED FLUSH CLOCK ASSEMBLY
22. FUME HOOD EXHAUST FLUE SYSTEM. SEE ROOF PLAN AND MECHANICAL DRAWINGS
23. ROOF MOUNTED EQUIPMENT ACCESS HATCH, SEE ROOF PLAN
24. (E) DOUBLE DETECTOR CHECK ASSEMBLY/FIRE DEPT. CONNECTION

TYPICAL ARCHED OPENINGS

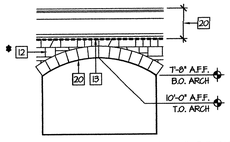

OPENINGS GREATER THAN 10'-0" IN WIDTH

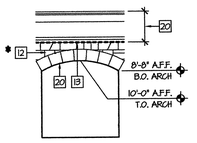

OPENINGS 10'-0" OR LESS IN WIDTH

NOTE:
* ALL STONE VENEER APPLIED DIRECTLY OVER PEDESTRIAN OPENINGS (WHERE OCCURS) TO BE MECHANICALLY FASTENED PER **CBC 1403.4.5** AND DETAIL **9/3.01**

NO STONE VENEER IS TO BE APPLIED OVER 12'-0" ABOVE FINISH FLOOR

tBP
architecture
planning
interiors
management

LICENSED ARCHITECT RENEWAL 08/31/2005 ROBERT W. SWIFT No. C-29880 STATE OF CALIFORNIA

tBP/architecture
1000 Burnett Ave, Suite 140
Concord, CA 94520
ph: 925.246.6499 fx: 925.246.6495

architect

consultant

APPROVED
DIV. OF THE STATE ARCHITECT
OFFICE OF REGULATION SERVICES
APPL NO. 105119
BY: [illegible]
DATE: 6-9-04

agency

owner

SAN RAMON VALLEY CENTER
CONTRA COSTA COMMUNITY COLLEGE DISTRICT
SAN RAMON, CALIFORNIA

tBP project number : 20212.00
file name: A-0412_exbel.dwg
drawn by: DM checked by:
date: 03-01-04 plot scale: 1:1

Rev:	date:	description:
1	03-24-04	DESIGN CLARIFICATIONS

drawing title: EXTERIOR ELEVATION - NORTH
building no.:
drawing no.: A4.12
drawing of

BE ABSOLUTELY CERTAIN TO ENJOY HAVE YOU DOG DOG-PROOF

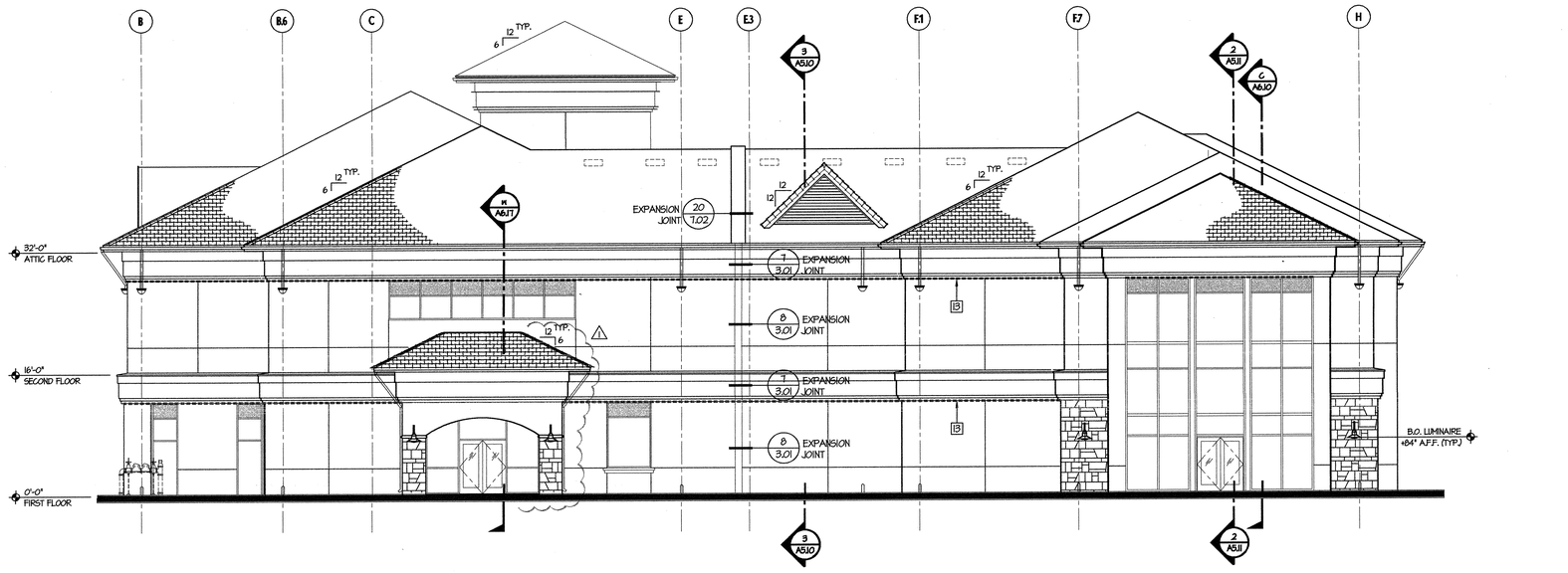

WEST ELEVATION
SCALE: 1/8"= 1'-0"

1

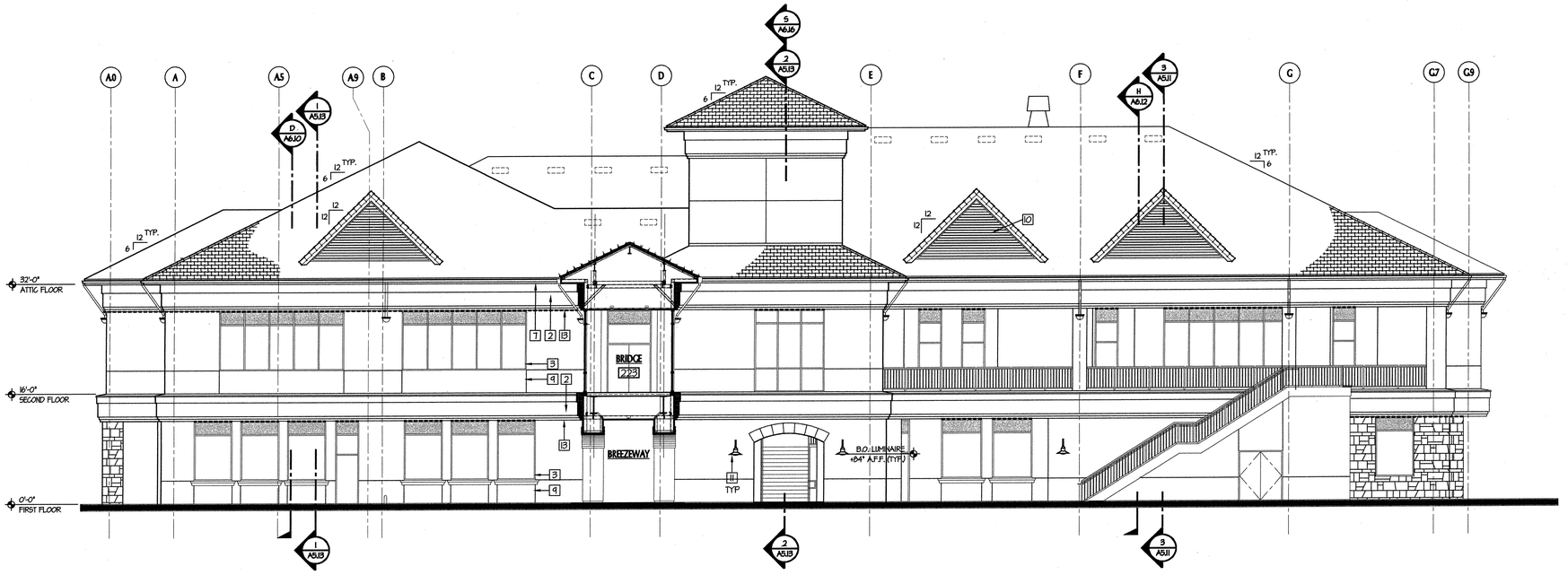

WEST SECTION - ELEVATION
SCALE: 1/8"= 1'-0"

2

KEY NOTES

1. CEMENT PLASTER FINISH (TYPICAL EXTERIOR FINISH U.N.O.)
2. PRE-COATED ARCHITECTURAL FOAM SHAPE W/ CEMENT PLASTER FINISH COAT, SEE DETAILS **1 & 2/3.01**
3. WINDOW SYSTEM, SEE FLOOR PLAN AND WINDOW SCHEDULES
4. DOOR, SEE FLOOR PLAN AND DOOR SCHEDULES
5. CONCRETE TILE SHAKE ROOF SYSTEM, SEE ROOF PLANS
6. ROOF VENT, SEE ROOF PLANS
7. CONTINUOUS GUTTER SYSTEM, SEE ROOF PLANS
8. EXPANSION JOINT IN ROOF ASSEMBLY, SEE ROOF PLANS AND **20/7.02**
9. CONTROL JOINT IN CEMENT PLASTER WALL FINISH
10. METAL DORMER LOUVERS, SEE ATTIC PLANS AD SCHEDULES
11. EXTERIOR MOUNTED DECORATIVE LIGHT FIXTURE. MOUNT AT HEIGHT INDICATED. SEE ELECTRICAL DRAWINGS FOR ADDITIONAL INFO.
12. STONE VENEER SYSTEM, SEE "EXTERIOR WALL ASSEMBLIES" AND "STONE VENEER NOTE", DETAIL **9/3.01**
13. CONTINUOUS COMPENSATION JOINT, SEE BUILDING AND WALL SECTIONS AND DETAIL **6/3.01**
14. METAL GUARDRAIL SYSTEM - PAINT FINISH, SEE DETAIL **18 & 19/10.01**
15. EXPOSED STEEL BRACE FRAME SYSTEM, PAINT FINISH. SEE STRUCTURAL DRAWINGS
16. WALL MOUNTED LOCKER SYSTEM (SHOWN "BEYOND")
17. DOWN SPOUT AND COLLECTOR HEAD SYSTEM, PAINT FINISH. SEE ROOF PLANS.
18. PRE-CAST CONCRETE WALL CAP
19. SPLIT FACE CMU WALL SYSTEM
20. CEMENTITIOUS COATED / POLYSTYRENE BASED ARCH TRIM, SEE **16/3.01**
21. BACK-LIGHTED FLUSH CLOCK ASSEMBLY
22. FUME HOOD EXHAUST FLUE SYSTEM. SEE ROOF PLAN AND MECHANICAL DRAWINGS
23. ROOF MOUNTED EQUIPMENT ACCESS HATCH, SEE ROOF PLAN
24. (E) DOUBLE DETECTOR CHECK ASSEMBLY/FIRE DEPT. CONNECTION

TYPICAL ARCHED OPENINGS

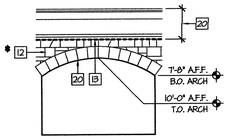

OPENINGS GREATER THAN 10'-0" IN WIDTH

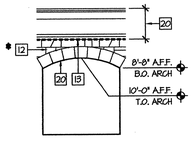

OPENINGS 10'-0" OR LESS IN WIDTH

NOTE:
* ALL STONE VENEER APPLIED DIRECTLY OVER PEDESTRIAN OPENINGS (WHERE OCCURS) TO BE MECHANICALLY FASTENED PER **CBC 1403A.5** AND DETAIL **9/3.01**

NO STONE VENEER IS TO BE APPLIED OVER 12'-0" ABOVE FINISH FLOOR

tBP
architecture
planning
interiors
management

LICENSED ARCHITECT — CALIFORNIA — No. C-9810 — STATE OF CALIFORNIA

tBP/Architecture
1000 Burnett Ave, Suite 140
Concord, CA 94520
ph: 925.246.6419 fx: 925.246.6495

architect

consultant

APPROVED
DEPARTMENT OF STATE ARCHITECT
DIV. OF REGULATION SERVICES
APP. No. 15719
DATE 6-4-04

agency

SAN RAMON VALLEY CENTER

CONTRA COSTA COMMUNITY COLLEGE DISTRICT

SAN RAMON, CALIFORNIA

owner

tBP project number : 20212.00
file name: A-0413_exte1.dwg
drawn by: DM checked by:
date: 03-09-04 plot scale: 1:1

Rev:	date:	description:
1	03-24-04	DESIGN CLARIFICATIONS

drawing title: EXTERIOR ELEVATION - WEST
building no.:
drawing no.: A4.13
drawing of

DO ABSOLUTELY DETERMINED TO ENJOY WHAT YOU DO 2004

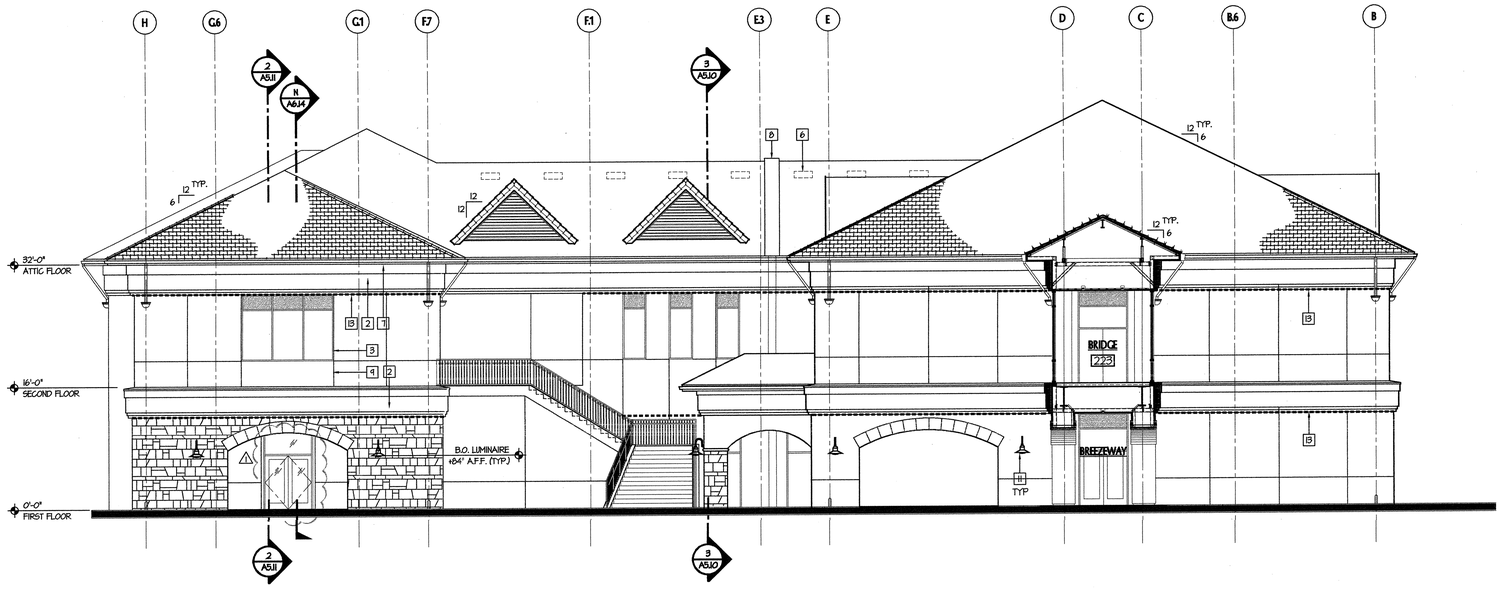

EAST SECTION / ELEVATION 1

SCALE: 1/8"= 1'-0"

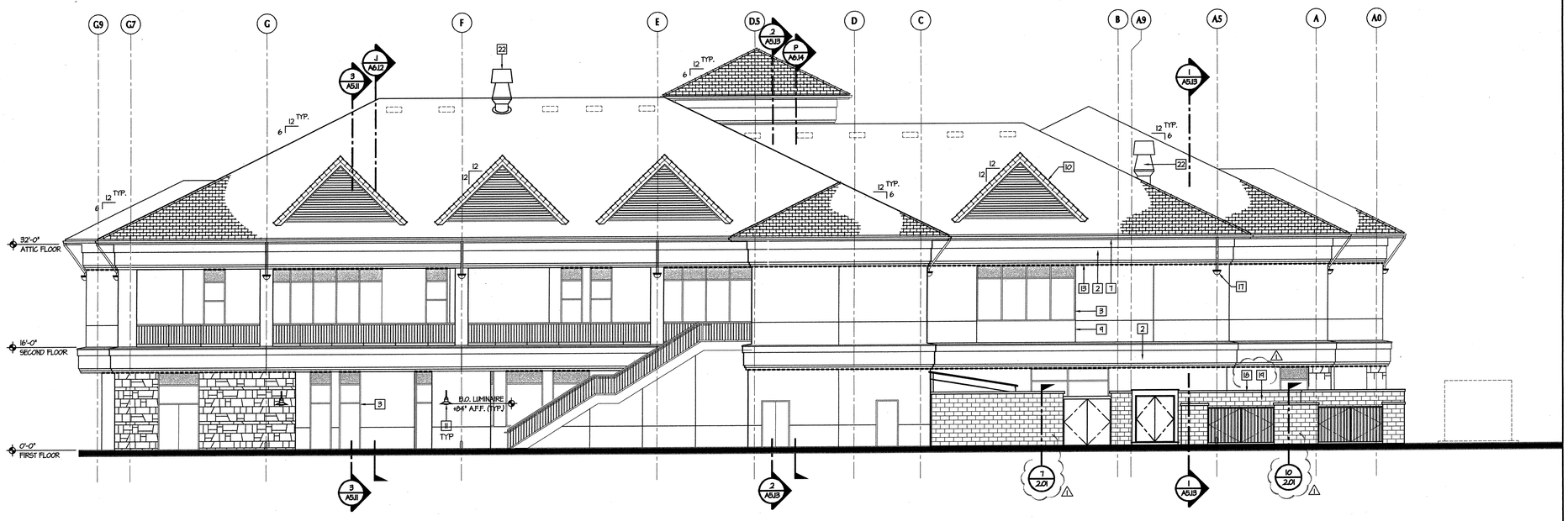

EAST ELEVATION 2

SCALE: 1/8"= 1'-0"

KEY NOTES

1. CEMENT PLASTER FINISH (TYPICAL EXTERIOR FINISH U.N.O.)
2. PRE-COATED ARCHITECTURAL FOAM SHAPE W/ CEMENT PLASTER FINISH COAT, SEE DETAILS **1 & 2/3.01**
3. WINDOW SYSTEM, SEE FLOOR PLAN AND WINDOW SCHEDULES
4. DOOR, SEE FLOOR PLAN AND DOOR SCHEDULES
5. CONCRETE TILE SHAKE ROOF SYSTEM, SEE ROOF PLANS
6. ROOF VENT, SEE ROOF PLANS
7. CONTINUOUS GUTTER SYSTEM, SEE ROOF PLANS
8. EXPANSION JOINT IN ROOF ASSEMBLY, SEE ROOF PLANS AND **20/7.02**
9. CONTROL JOINT IN CEMENT PLASTER WALL FINISH
10. METAL DORMER LOUVERS, SEE ATTIC PLANS AD SCHEDULES
11. EXTERIOR MOUNTED DECORATIVE LIGHT FIXTURE. MOUNT AT HEIGHT INDICATED. SEE ELECTRICAL DRAWINGS FOR ADDITIONAL INFO.
12. STONE VENEER SYSTEM, SEE "EXTERIOR WALL ASSEMBLIES" AND "STONE VENEER NOTE", DETAIL **9/3.01**
13. CONTINUOUS COMPENSATION JOINT, SEE BUILDING AND WALL SECTIONS AND DETAIL **6/3.01**
14. METAL GUARDRAIL SYSTEM - PAINT FINISH, SEE DETAIL **18 & 19/10.01**
15. EXPOSED STEEL BRACE FRAME SYSTEM, PAINT FINISH. SEE STRUCTURAL DRAWINGS
16. WALL MOUNTED LOCKER SYSTEM (SHOWN "BEYOND")
17. DOWN SPOUT AND COLLECTOR HEAD SYSTEM, PAINT FINISH. SEE ROOF PLANS.
18. PRE-CAST CONCRETE WALL CAP
19. SPLIT FACE CMU WALL SYSTEM
20. CEMENTITIOUS COATED / POLYSTYRENE BASED ARCH TRIM, SEE **16/3.01**
21. BACK-LIGHTED FLUSH CLOCK ASSEMBLY
22. FUME HOOD EXHAUST FLUE SYSTEM. SEE ROOF PLAN AND MECHANICAL DRAWINGS
23. ROOF MOUNTED EQUIPMENT ACCESS HATCH, SEE ROOF PLAN
24. (E) DOUBLE DETECTOR CHECK ASSEMBLY/FIRE DEPT. CONNECTION

TYPICAL ARCHED OPENINGS

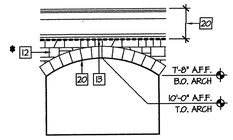

OPENINGS GREATER THAN 10'-0" IN WIDTH

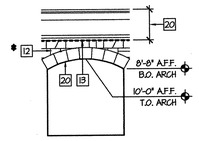

OPENINGS 10'-0" OR LESS IN WIDTH

NOTE:
* ALL STONE VENEER APPLIED DIRECTLY OVER PEDESTRIAN OPENINGS (WHERE OCCURS) TO BE MECHANICALLY FASTENED PER **CBC 1403.A.5** AND DETAIL **9/3.01**

NO STONE VENEER IS TO BE APPLIED OVER 12'-0" ABOVE FINISH FLOOR

tBP
architecture
planning
interiors
management

LICENSED ARCHITECT RENEWAL 08/31/2005 STATE OF CALIFORNIA

tBP/Architecture
1000 Burnett Ave, Suite 140
Concord, CA 94520
ph: 925.246.6449 fx: 925.246.6495

architect

consultant

APPROVED DIVISION OF THE STATE ARCHITECT OFFICE OF REGIONAL SERVICES APPL NO. 100119 ESTHER SS. DATE 6-9-04

agency

SAN RAMON VALLEY CENTER

CONTRA COSTA COMMUNITY COLLEGE DISTRICT

SAN RAMON, CALIFORNIA

owner

tBP project number : 20212.00

file name: A-0414_exte1.dwg

drawn by: DM checked by:

date: 03-09-04 plot scale: 1:1

Rev:	date:	description:
1	03-24-04	DESIGN CLARIFICATIONS

drawing title: EXTERIOR ELEVATION - EAST

building no.:

drawing no.: A4.14

drawing of

THE ARCHITECT DESIGNED TO ENJOY, HAVE YOU DO 09.24.04

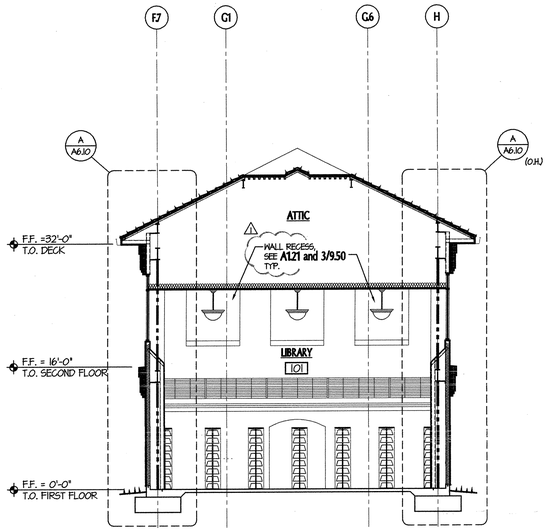

BUILDING SECTION SCALE: 1/8"= 1'-0" 1

Filename: A-BSEC11

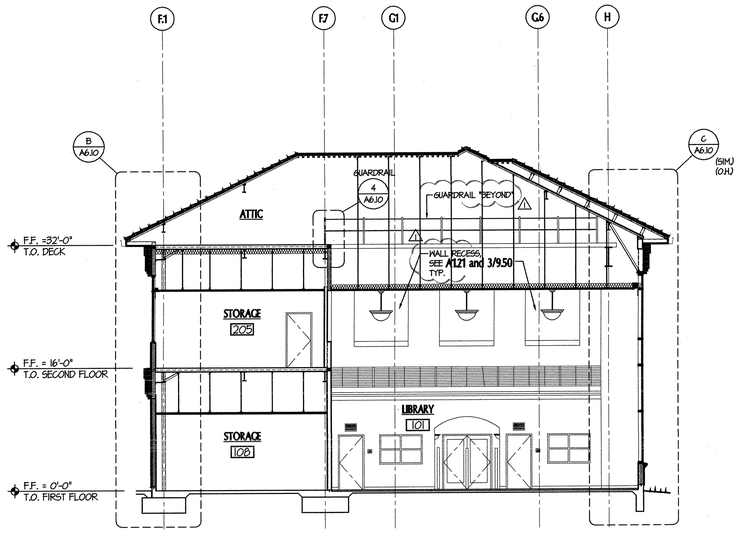

BUILDING SECTION SCALE: 1/8"= 1'-0" 2

Filename: A-BSEC11

LEGEND

= STRUCTURAL STEEL BRACE FRAME, SEE STRUCTURAL DWG'S.

= RATED ASSEMBLY, SEE FLOOR PLAN FOR TYPE AND EXTENT

= EXTERIOR WALL ASSEMBLY, SEE DETAIL 9/3.01

= HORIZONTAL ASSEMBLY, SEE DETAIL 18/3.01

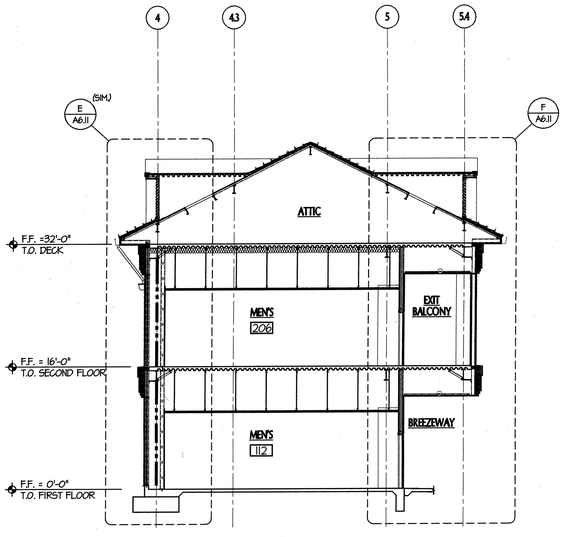

BUILDING SECTION SCALE: 1/8"= 1'-0" 3

Filename: A-BSEC11F

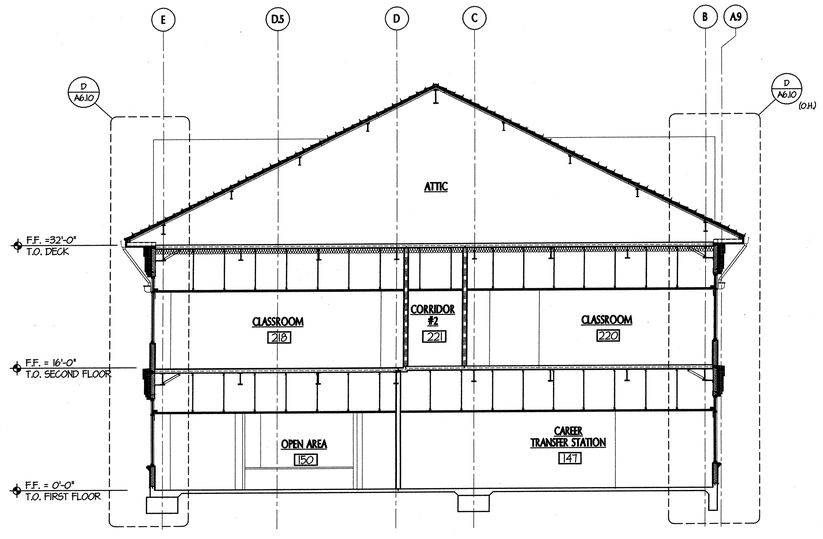

BUILDING SECTION SCALE: 1/8"= 1'-0" 4

Filename: A-BSEC16

BE ABSOLUTELY DETERMINED TO ENJOY HAVE YOU DO (23.04)

32

tBP
architecture
planning
interiors
management

LICENSED ARCHITECT ANDREW M. KLEIN No. C-8486 12-31-11 STATE OF CALIFORNIA

tBP/Architecture
1000 Burnett Ave, Suite 140
Concord, CA 94520
ph: 925.246.6419 fx: 925.246.6495

architect
consultant

APPROVED
DSA
BY THE STATE STAMP
OFFICE OF REGULATION SERVICES
APP. No. 105719
ACCESS COMPLIANCE
DATE 6-15-09

agency

SAN RAMON VALLEY CENTER

CONTRA COSTA COMMUNITY COLLEGE DISTRICT

SAN RAMON, CALIFORNIA

owner

tBP project number : 20212.00
file name: A-0510_bsec.dwg
drawn by: MM checked by:
date: 08-04-04 plot scale: 1:1

Rev:	date:	description:
1	08-24-04	DESIGN CLARIFICATIONS

drawing title: BUILDING SECTIONS

building no.:

drawing no.: A5.10

drawing of

LEGEND

= STRUCTURAL STEEL BRACE FRAME, SEE STRUCTURAL DWGS.

= RATED ASSEMBLY, SEE FLOOR PLAN FOR TYPE AND EXTENT

= EXTERIOR WALL ASSEMBLY, SEE DETAIL **9/3.01**

= HORIZONTAL ASSEMBLY, SEE DETAIL **18/3.01**

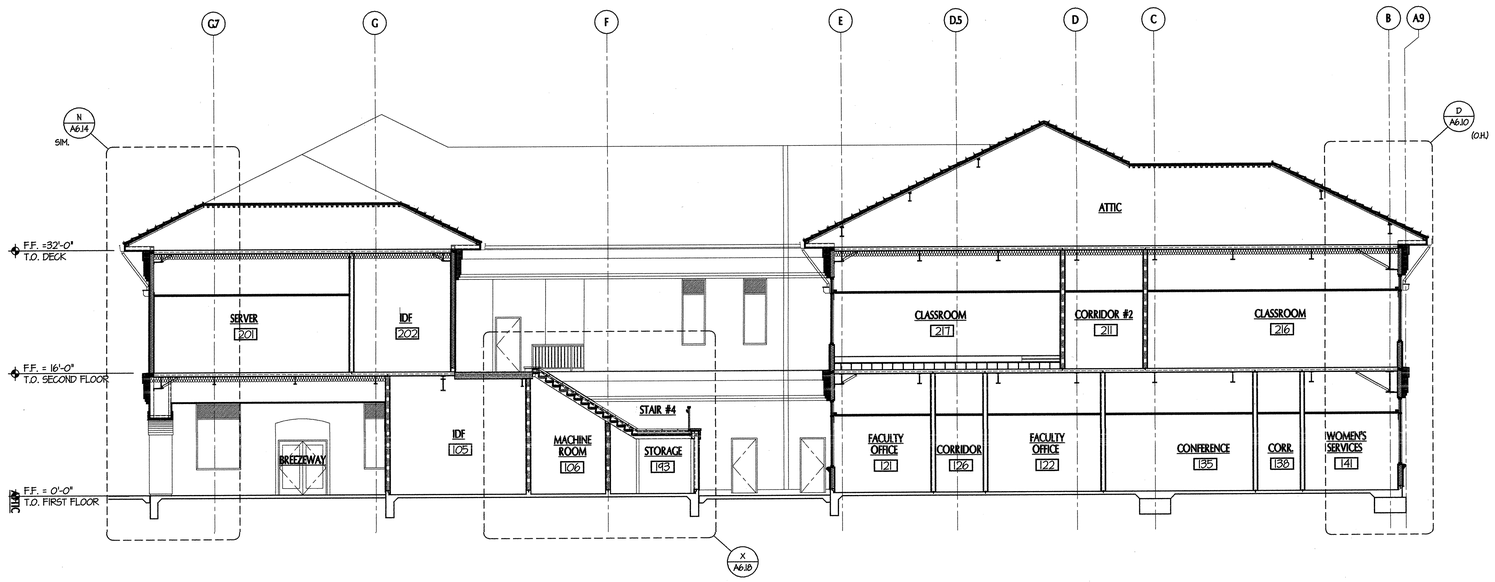

BUILDING SECTION 1
SCALE: 1/8"= 1'-0"

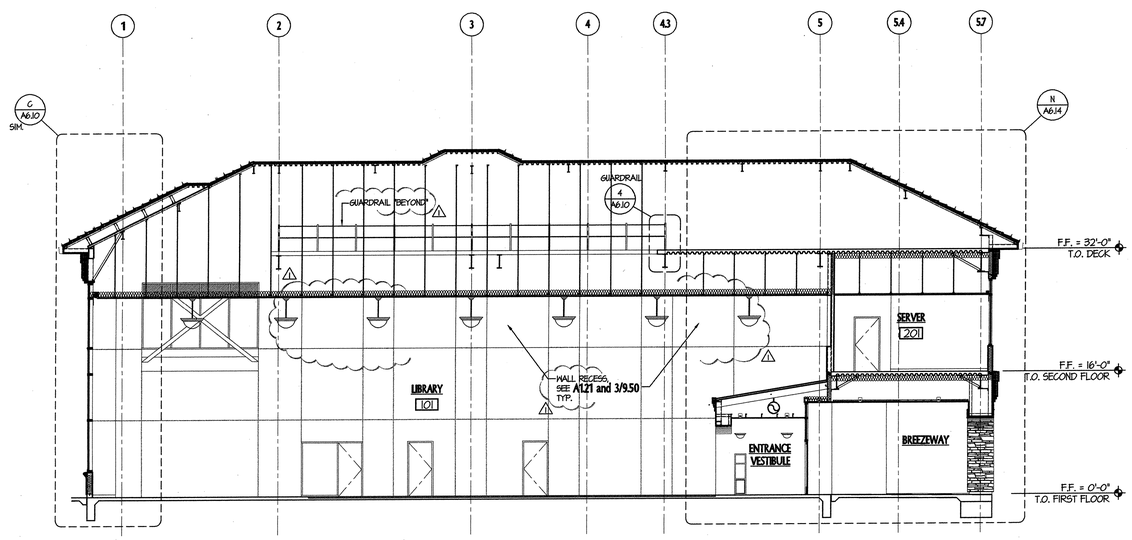

BUILDING SECTION 2
SCALE: 1/8"= 1'-0"

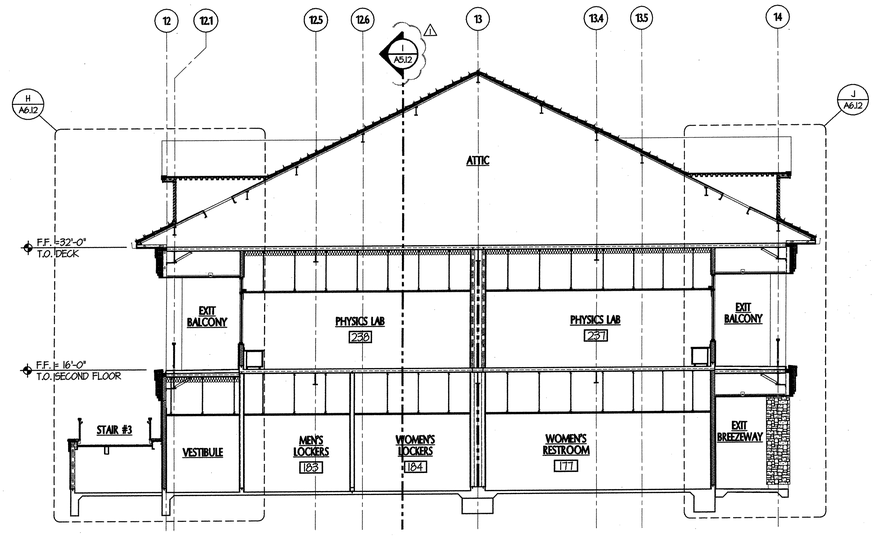

BUILDING SECTION 3
SCALE: 1/8"= 1'-0"

Filename: A-BSECTE

Filename: A-BSECTB

Filename: A-BSECTN

IF ARCHITECT DETERMINED TO ENLIST HAVE YOU DO 1/32-3/4"

tBP
architecture
planning
interiors
management

tBP/Architecture
1000 Burnett Ave, Suite 140
Concord, CA 94520
ph: 925.246.6419 fx: 925.246.6495

architect

consultant

APPROVED
DSA CERTIFYING STAMP
DIV. OF THE STATE ARCHITECT
OFFICE OF REGULATION SERVICES
APPL NO. 110719
BY [signature]
DATE 6-9-04

agency

owner

SAN RAMON VALLEY CENTER

CONTRA COSTA COMMUNITY COLLEGE DISTRICT

SAN RAMON, CALIFORNIA

tBP project number : 20212.00

file name: A-0511_bsec.dwg

drawn by: MH checked by:

date: 03-01-04 plot scale: 1:1

Rev:	date:	description:
1	03-29-04	DESIGN CLARIFICATIONS

drawing title: BUILDING SECTIONS

building no.:

drawing no.: A5.11

drawing of

LEGEND

= STRUCTURAL STEEL BRACE FRAME, SEE STRUCTURAL DWG'S.

= RATED ASSEMBLY, SEE FLOOR PLAN FOR TYPE AND EXTENT

= EXTERIOR WALL ASSEMBLY, SEE DETAIL 9/3.01

= HORIZONTAL ASSEMBLY, SEE DETAIL 18/3.01

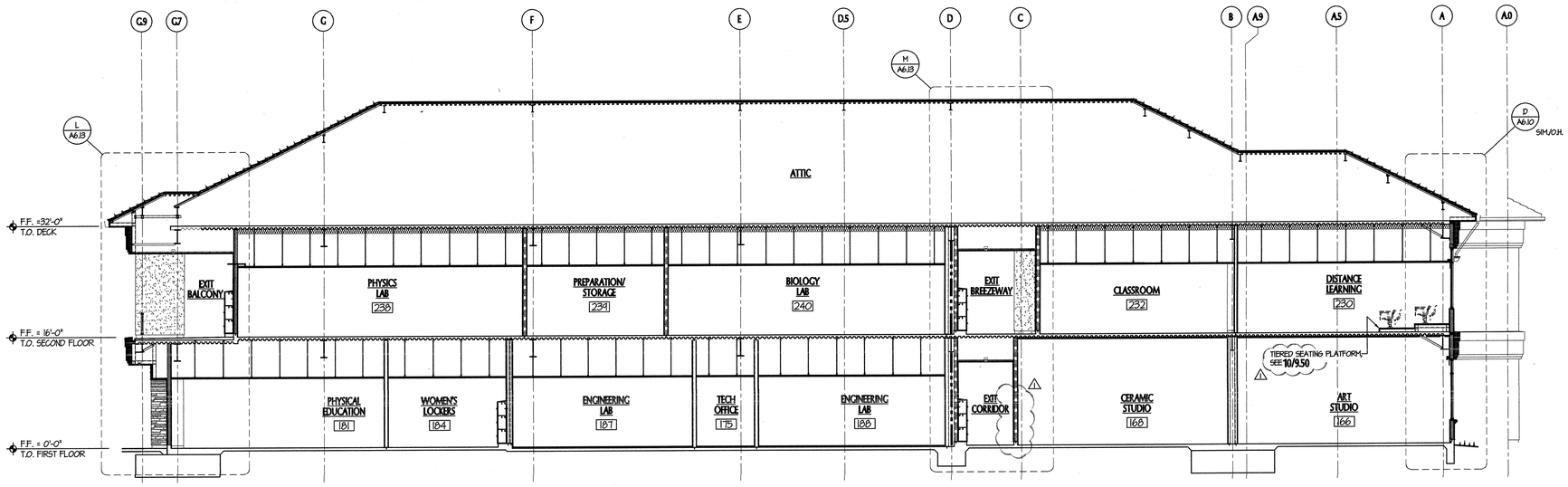

BUILDING SECTION 1
SCALE: 1/8" = 1'-0"

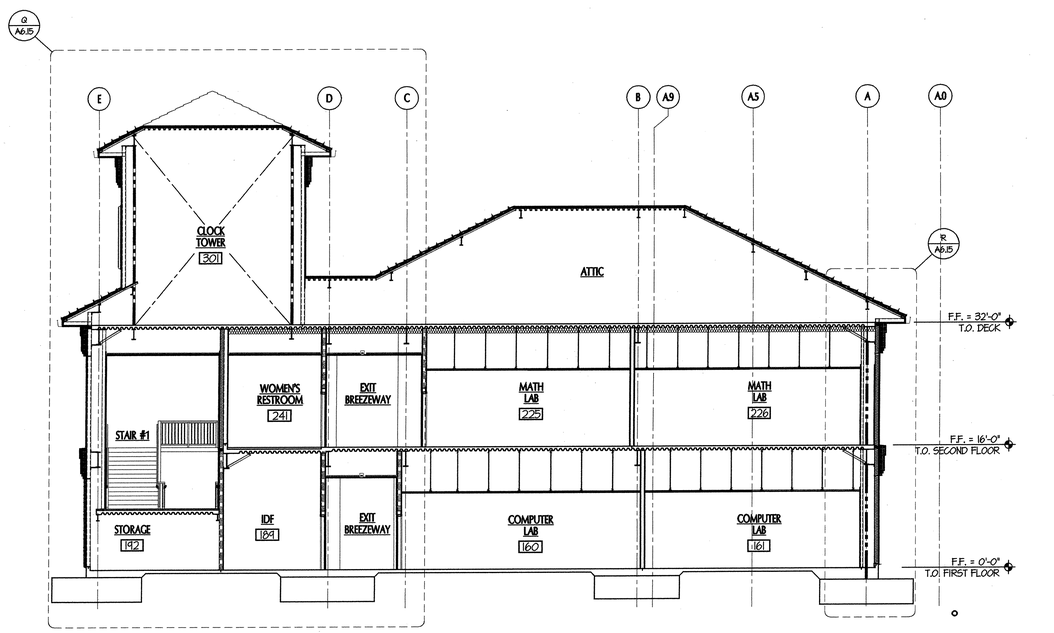

BUILDING SECTION 2
SCALE: 1/8" = 1'-0"

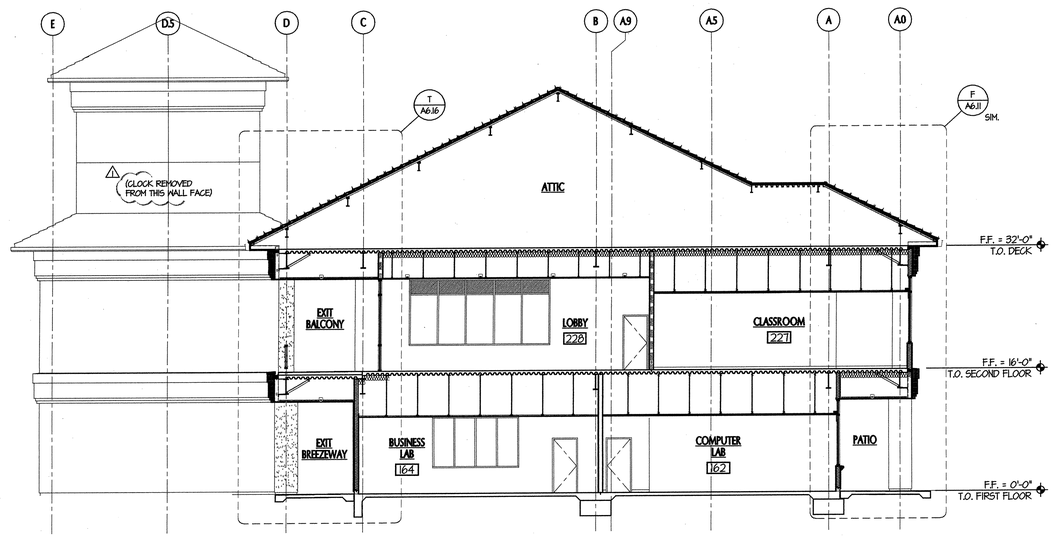

BUILDING SECTION 3
SCALE: 1/8" = 1'-0"

Filename: A-BSECT.A

Filename: A-BSECT.C

Filename: A-BSECT.J

RE: ABSOLUTELY DESIGNED TO ENJOY HVAC 1/20/2004

tBP
architecture
planning
interiors
management

tBP/Architecture
1000 Burnett Ave, Suite 140
Concord, CA 94520
ph: 925.246.6419 fx: 925.246.6495

architect

consultant

APPROVED
DEPARTMENT OF STATE ARCHITECT
OFFICE OF REGULATION SERVICES
APPL NO. 10D719
BY: [signature]
DATE: 6-9-04

agency

SAN RAMON VALLEY CENTER

CONTRA COSTA COMMUNITY COLLEGE DISTRICT

SAN RAMON, CALIFORNIA

owner

tBP project number : 20212.00

file name: A-0512_bsec.dwg

drawn by: MM checked by:

date: 03-04-04 plot scale: 1:1

Rev.	date:	description:
1	05-24-04	DESIGN CLARIFICATIONS

drawing title: building no.:

BUILDING SECTIONS

drawing no.:

A5.12

drawing of

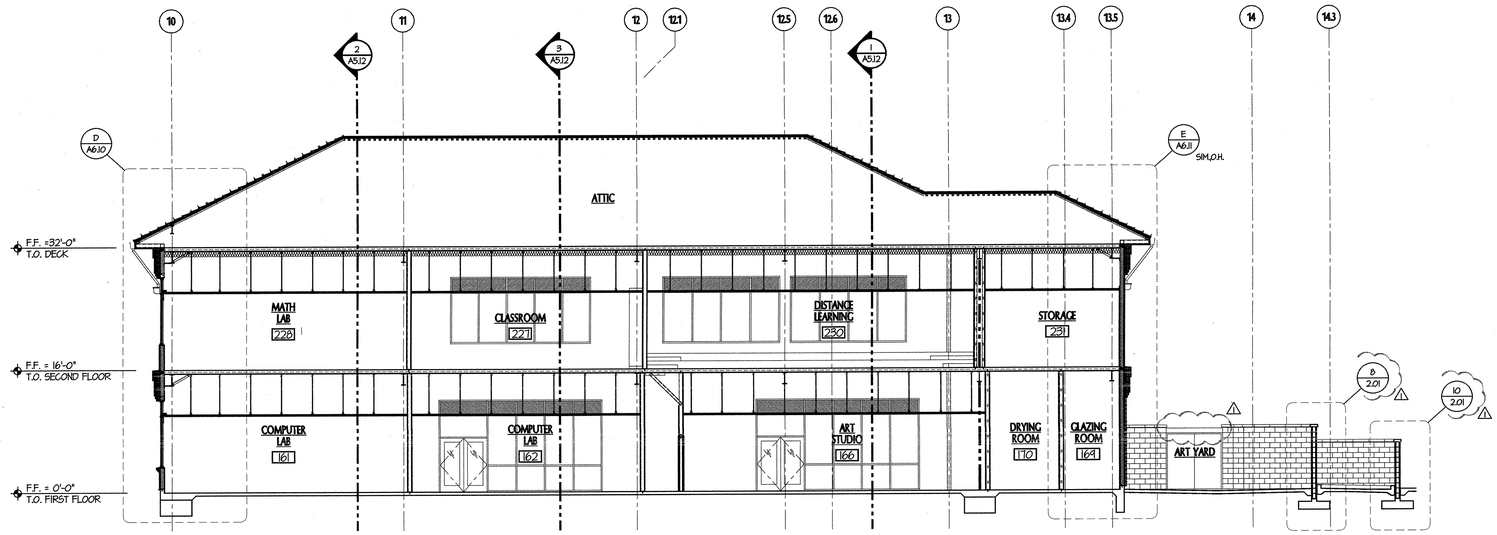

BUILDING SECTION SCALE: 1/8"= 1'-0" | 1

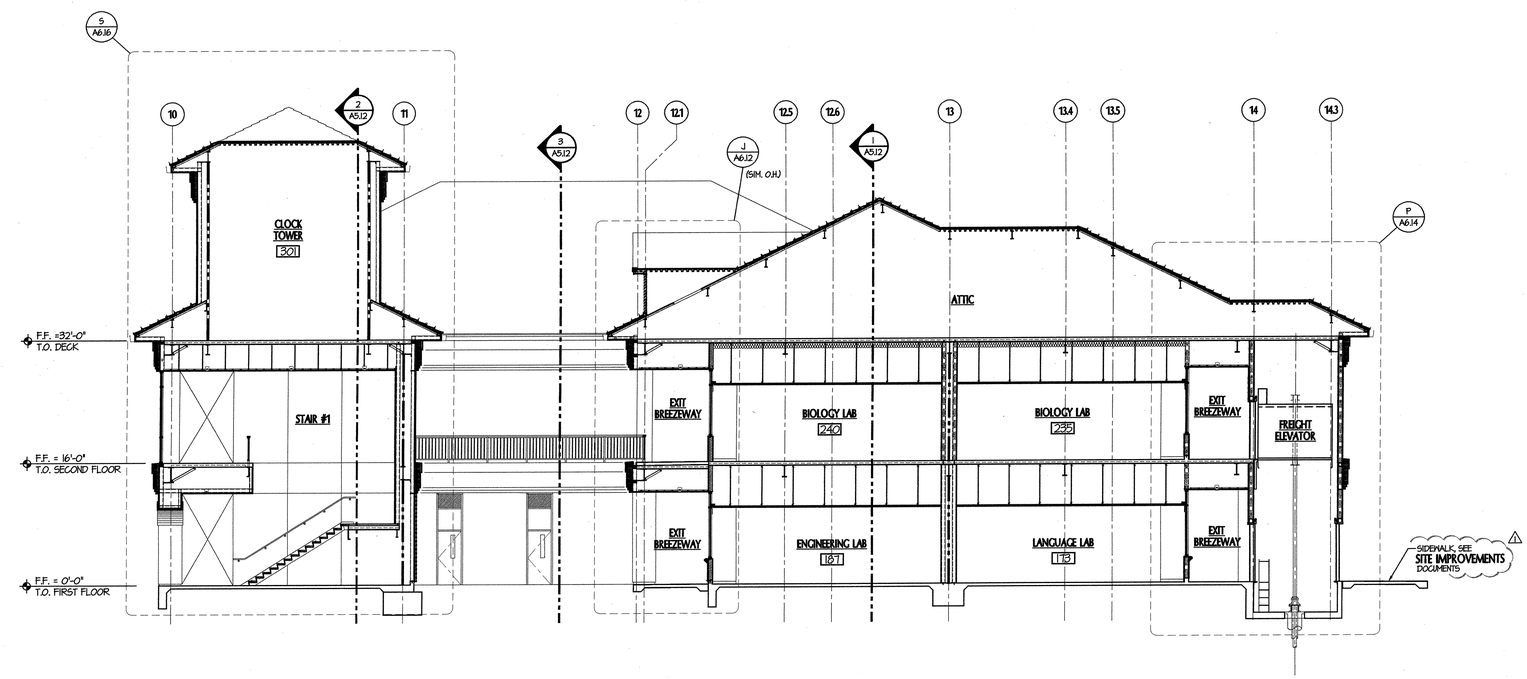

BUILDING SECTION SCALE: 1/8"= 1'-0" | 2

LEGEND

= STRUCTURAL STEEL BRACE FRAME, SEE STRUCTURAL DWGS.

= RATED ASSEMBLY, SEE FLOOR PLAN FOR TYPE AND EXTENT

= EXTERIOR WALL ASSEMBLY, SEE DETAIL 9/3.01

= HORIZONTAL ASSEMBLY, SEE DETAIL 18/3.01

tBP
architecture
planning
interiors
management

tBP/Architecture
1000 Burnett Ave, Suite 140
Concord, CA 94520
ph: 925.246.6419 fx: 925.246.6495

LICENSED ARCHITECT MICHAEL J. VINNEDGE No. C-26810 RENEWAL 08/31/05 STATE OF CALIFORNIA

architect

consultant

APPROVED
GEOTECHNICAL REPORT
DIV. OF REGULATION SERVICES
APPL. NO. 110719
BY [signature]
DATE 6-4-04

agency

owner

SAN RAMON VALLEY CENTER

CONTRA COSTA COMMUNITY COLLEGE DISTRICT

SAN RAMON, CALIFORNIA

tBP project number : 20212.00

file name: A-0513_bsec.dwg

drawn by: MH checked by:

date: 03-01-04 plot scale: 1:1

Rev:	date:	description:
1	03-21-04	DESIGN CLARIFICATIONS

drawing title: BUILDING SECTIONS

drawing no.: A5.13

drawing of

Filename: A-BSECTD

Filename: A-BSECTH

BE ABSOLUTELY DETERMINED TO ENJOY WHAT YOU DO (29.24.04)

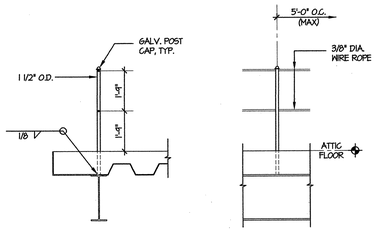

GUARDRAIL @ UNOCCUPIED ATTIC

SCALE: 3/8" = 1'-0"

4

GENERAL NOTES

1. FOR TYPICAL STEEL STUD FRAMING DETAILS, SEE SHEET **4.01**
2. FOR TYPICAL EAVE DIMENSIONS, SEE **D/A6.10** ⚠

KEYNOTES

1. EXPOSED STEEL FRAMING, PAINT FINISH, SEE STRUCTURAL
2. SUSPENDED CEILING SYSTEM, SEE REFLECTED CEILING PLANS AND ROOM FINISH SCHEDULE
3. GUARDRAIL IN UNOCCUPIED ATTIC, SEE ATTIC PLANS
4. GLAZED CURTAIN WALL SYSTEM, SEE PLANS & SCHEDULES
5. STEEL FRAMING SYSTEM, SEE STRUCTURAL FRAMING PLANS
6. BOOKSTACKS, SEE FLOOR PLANS
7. LINE OF FURRED COLUMN/WALL ENCLOSURE BEYOND
8. DECK OPENING FOR MECHANICAL SYSTEM, SEE ATTIC PLAN AND MECHANICAL DWG'S FOR SIZE AND LOCATION ⚠
9. LIGHT FIXTURE, SEE REFLECTED CEILING AND ELECTRICAL PLANS
10. THEFT SENSOR, SEE FLOOR PLANS
11. CEMENT PLASTER SOFFIT OR CEILING, SEE REFLECTED CEILING PLANS
12. PAINTED METAL LOCKER, SEE FLOOR PLANS AND DETAIL **17/9.50** ⚠
13. HANDRAIL/GUARDRAIL AT STAIRWAYS (SHOWN "DASHED", FOR CLARITY AGAINST ADJACENT STRINGER CAP SYSTEM), SEE DETAILS **18 & 19B/10.01**
14. GUARDRAIL AT BREEZEWAYS , SEE DETAILS **17 & 19A/10.01**
15. SOFFIT VENT, SEE REFLECTED CEILING PLANS
16. EXPOSED DUCTWORK, SEE **MECH. DWG'S**

LEGEND

= STRUCTURAL STEEL BRACE FRAME, SEE STRUCTURAL DWG'S.

= RATED ASSEMBLY, SEE FLOOR PLAN FOR TYPE AND EXTENT

= EXTERIOR WALL ASSEMBLY, SEE DETAIL **9/3.01**

= HORIZONTAL ASSEMBLY, SEE DETAIL **18/3.01**

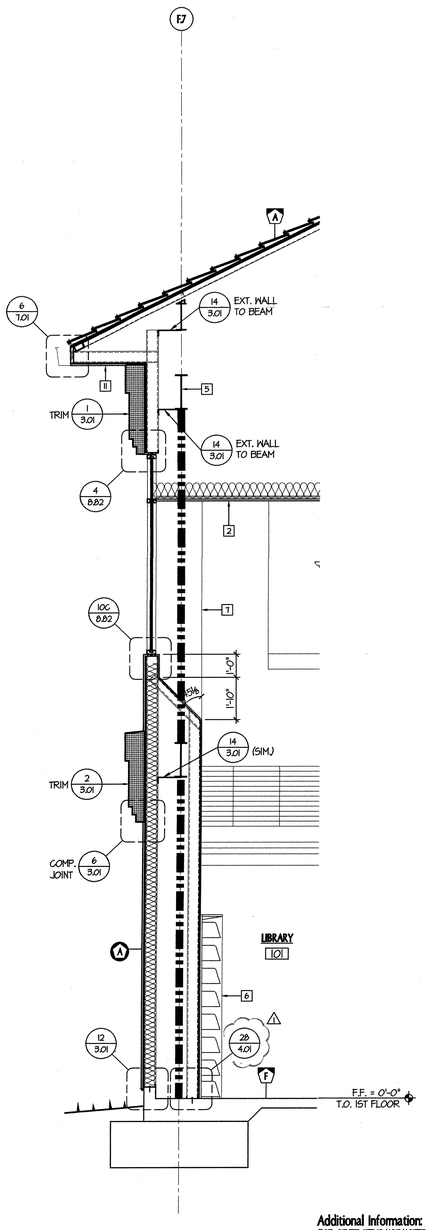

Additional Information:
FOR OTHER ITEMS NOT NOTED SEE DETAIL(S).
D/A6.10

WALL SECTION
SCALE: 3/8" = 1'-0"

A

Filename: A-BSECT1

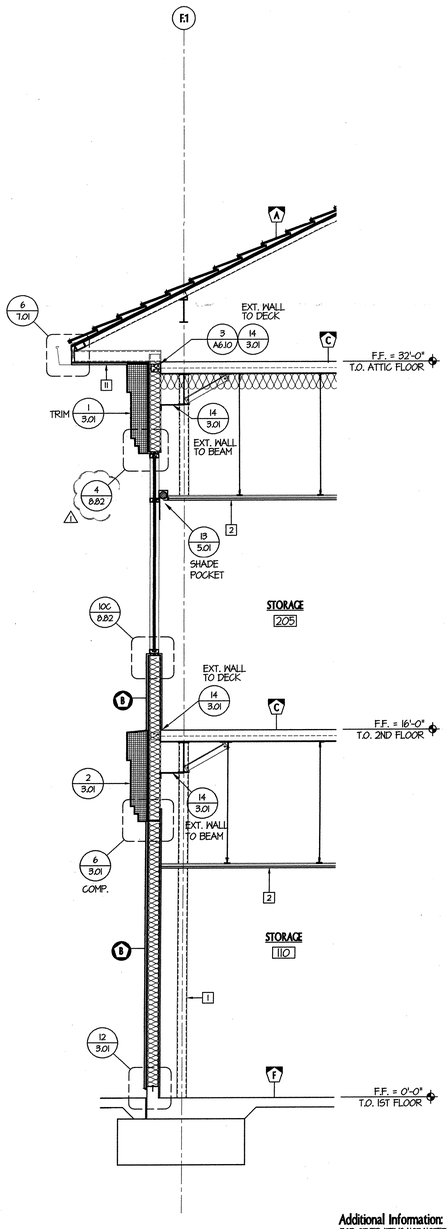

Additional Information:
FOR OTHER ITEMS NOT NOTED SEE DETAIL(S).
D/A6.10

WALL SECTION
SCALE: 3/8" = 1'-0"

B

Filename: A-BSECTH

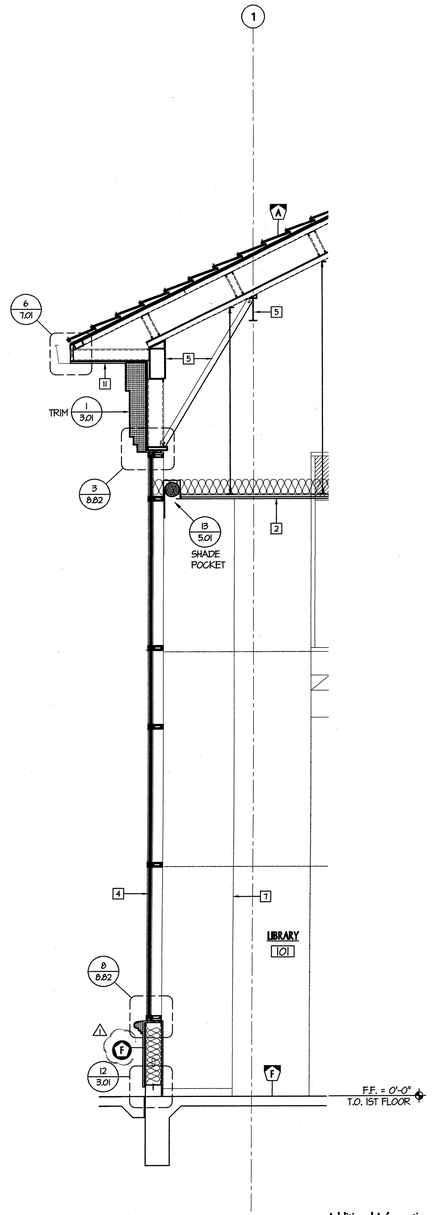

Additional Information:
FOR OTHER ITEMS NOT NOTED SEE DETAIL(S).
D/A6.10

WALL SECTION
SCALE: 3/8" = 1'-0"

C

Filename: A-BSECTB

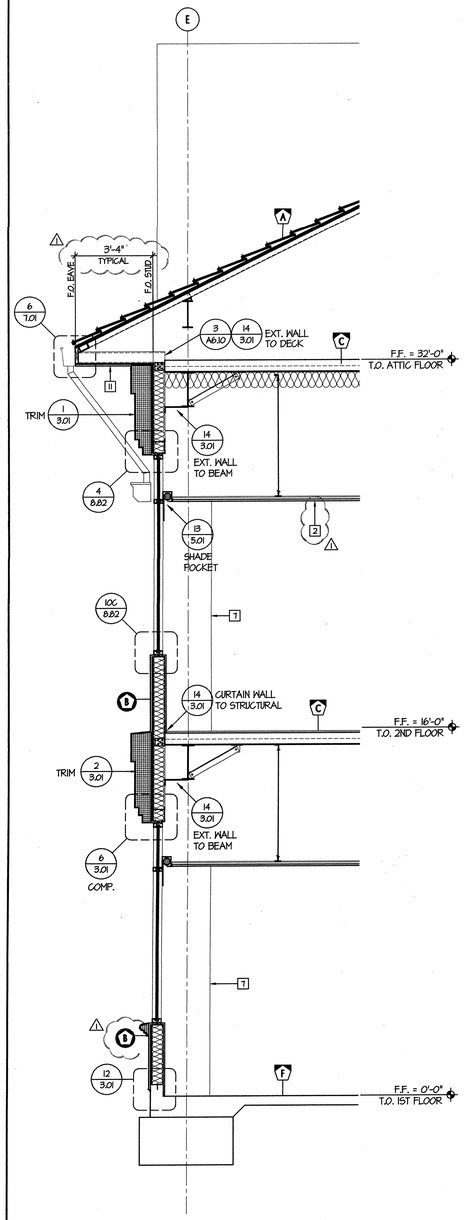

Additional Information:
FOR OTHER ITEMS NOT NOTED SEE DETAIL(S).
D/A6.10

WALL SECTION
SCALE: 3/8" = 1'-0"

D

Filename: A-BSECT6

tBP/Architecture
1000 Burnett Ave, Suite 140
Concord, CA 94520
ph: 925.246.6419 fx: 925.246.6495

architect

consultant

APPROVED
DEPARTMENTAL STAMP
FIRE PROTECTION DISTRICT
OFFICE OF REGULATION SERVICES
BY: [illegible] 1357/19
APPR. NO. FIRE-20_-_-_
DATE: 6-4-04

agency

SAN RAMON VALLEY CENTER

CONTRA COSTA COMMUNITY COLLEGE DISTRICT

SAN RAMON, CALIFORNIA

owner

tBP project number : 20212.00
file name: A-0610_wsec.dwg
drawn by: MM **checked by:**
date: 03-09-04 **plot scale:** 1:1

Rev:	date:	description:
1	03-24-04	DESIGN CLARIFICATIONS

drawing title: WALL SECTIONS AND DETAILS
building no.:
drawing no.: A6.10
drawing of

BE ABSOLUTELY DETERMINED TO ENJOY! MAY 13 10:29:24 2004

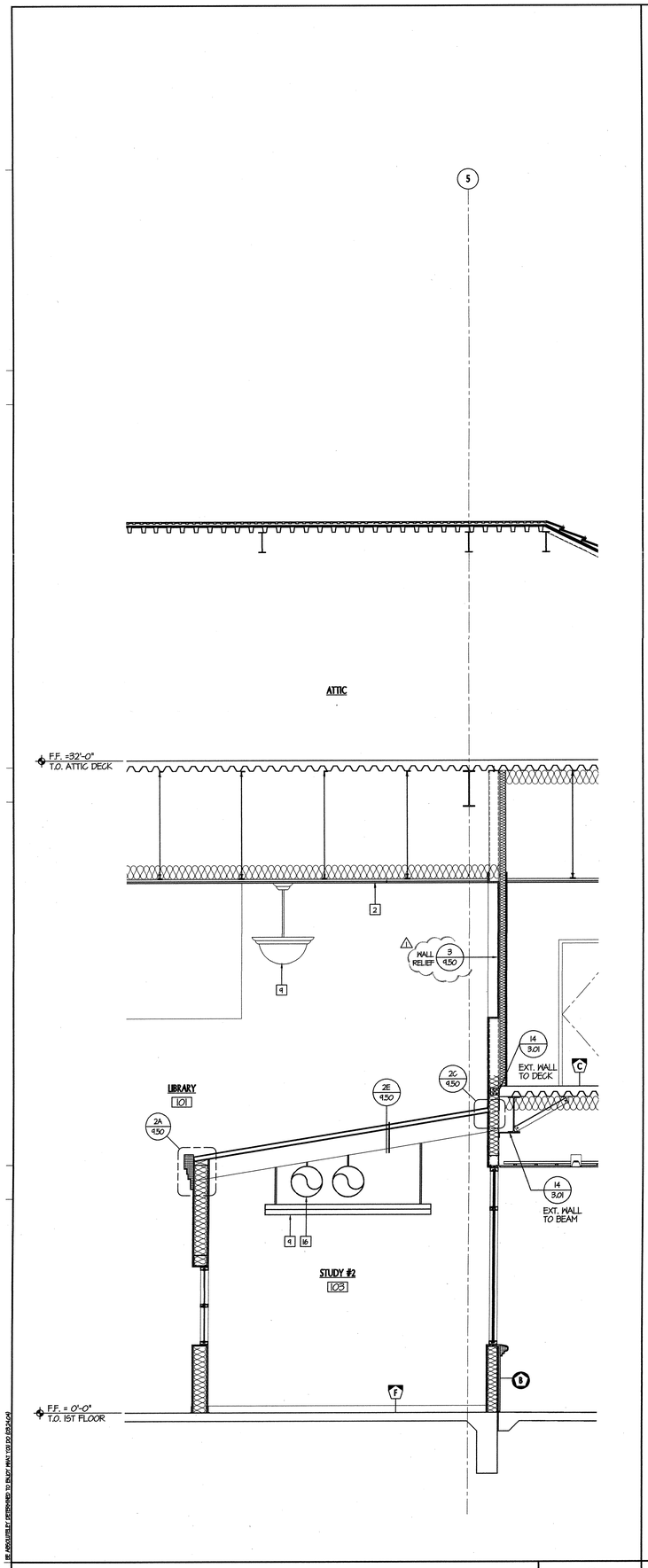

WALL SECTION
SCALE: 3/8"= 1'-0"
G

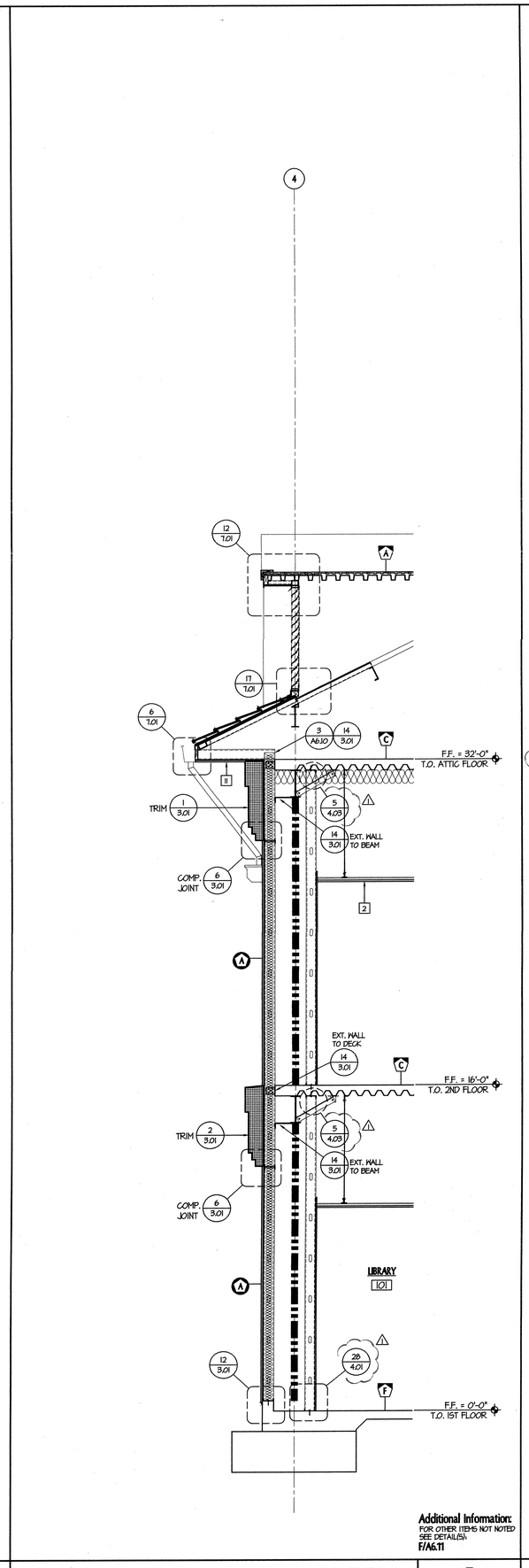

Additional Information:
FOR OTHER ITEMS NOT NOTED SEE DETAIL(S):
F/A6.11

WALL SECTION
SCALE: 3/8"= 1'-0"
E

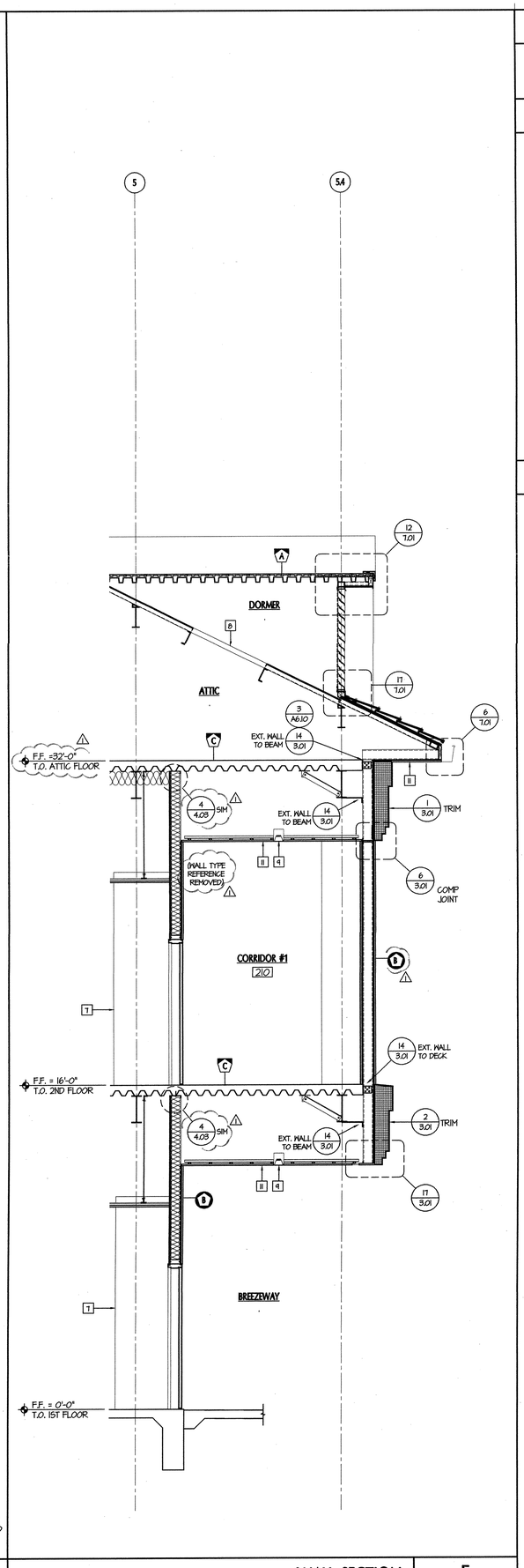

WALL SECTION
SCALE: 3/8"= 1'-0"
F

GENERAL NOTES

1. FOR TYPICAL STEEL STUD FRAMING DETAILS, SEE SHEET **4.01**
2. FOR TYPICAL EAVE DIMENSIONS, SEE **D/A6.10** △1

KEYNOTES

1. EXPOSED STEEL FRAMING, PAINT FINISH, SEE STRUCTURAL
2. SUSPENDED CEILING SYSTEM, SEE REFLECTED CEILING PLANS AND ROOM FINISH SCHEDULE
3. GUARDRAIL IN UNOCCUPIED ATTIC, SEE ATTIC PLANS
4. GLAZED CURTAIN WALL SYSTEM, SEE PLANS & SCHEDULES
5. STEEL FRAMING SYSTEM, SEE STRUCTURAL FRAMING PLANS
6. BOOKSTACKS, SEE FLOOR PLANS
7. LINE OF FURRED COLUMN/WALL ENCLOSURE BEYOND
8. DECK OPENING FOR MECHANICAL SYSTEM, SEE ATTIC PLAN AND MECHANICAL DWG'S FOR SIZE AND LOCATION. △1
9. LIGHT FIXTURE, SEE REFLECTED CEILING AND ELECTRICAL PLANS
10. THEFT SENSOR, SEE FLOOR PLANS
11. CEMENT PLASTER SOFFIT OR CEILING, SEE REFLECTED CEILING PLANS
12. PAINTED METAL LOCKER, SEE FLOOR PLANS AND DETAIL **17/9.50** △1
13. HANDRAIL/GUARDRAIL AT STAIRWAYS (SHOWN "DASHED"; FOR CLARITY AGAINST ADJACENT STRINGER CAP SYSTEM), SEE DETAILS **18 & 19B/10.01**
14. GUARDRAIL AT BREEZEWAYS , SEE DETAILS **17 & 19A/10.01**
15. SOFFIT VENT, SEE REFLECTED CEILING PLANS
16. EXPOSED DUCTWORK, SEE **MECH. DWG'S**

LEGEND

= STRUCTURAL STEEL BRACE FRAME, SEE STRUCTURAL DWG'S.

= RATED ASSEMBLY, SEE FLOOR PLAN FOR TYPE AND EXTENT

(A) = EXTERIOR WALL ASSEMBLY, SEE DETAIL **9/3.01**

(A) = HORIZONTAL ASSEMBLY, SEE DETAIL **18/3.01**

tBP
architecture
planning
interiors
management

LICENSED ARCHITECT
RICHARD A. MANNUM, AIA
NO. C-8885
STATE OF CALIFORNIA

tBP/Architecture
1000 Burnett Ave, Suite 140
Concord, CA 94520
ph: 925.246.6419 fx: 925.246.6495

architect

consultant

APPROVED
DEPARTMENT OF STATE ARCHITECT
OFFICE OF REGULATION SERVICES
APPL. NO. 105719
ACTION FILE
DATE 6-9-04

agency

SAN RAMON VALLEY CENTER

CONTRA COSTA COMMUNITY COLLEGE DISTRICT

SAN RAMON, CALIFORNIA

owner

tBP project number : 20212.00

file name: A-0611_rsec.dwg

drawn by: MM checked by:

date: 03-09-04 plot scale: 1:1

Rev:	date:	description:
△1	03-29-04	DESIGN CLARIFICATIONS

drawing title: building no.:

WALL SECTIONS

drawing no.:

A6.11

drawing of

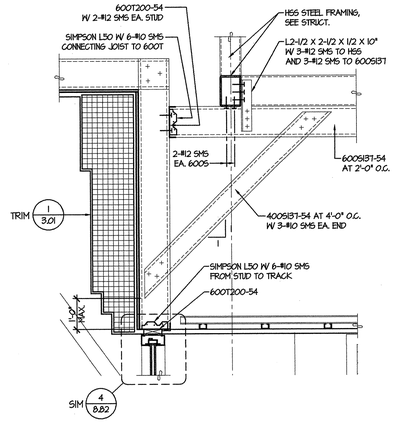

DETAIL 2
SCALE: 1"= 1'-0"

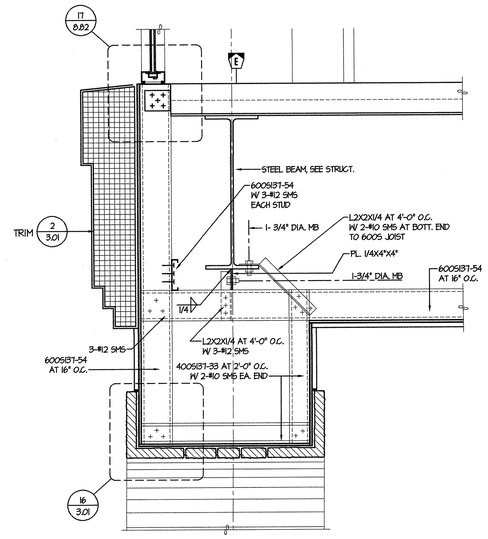

DETAIL 3
SCALE: 1"= 1'-0"

GENERAL NOTES

1. FOR TYPICAL STEEL STUD FRAMING DETAILS, SEE SHEET **4.01**
2. FOR TYPICAL EAVE DIMENSIONS, SEE **D/A6.10** ⚠

KEYNOTES

1. EXPOSED STEEL FRAMING, PAINT FINISH, SEE STRUCTURAL
2. SUSPENDED CEILING SYSTEM, SEE REFLECTED CEILING PLANS AND ROOM FINISH SCHEDULE
3. GUARDRAIL IN UNOCCUPIED ATTIC, SEE ATTIC PLANS
4. GLAZED CURTAIN WALL SYSTEM, SEE PLANS & SCHEDULES
5. STEEL FRAMING SYSTEM, SEE STRUCTURAL FRAMING PLANS
6. BOOKSTACKS, SEE FLOOR PLANS
7. LINE OF FURRED COLUMN/WALL ENCLOSURE BEYOND
8. DECK OPENING FOR MECHANICAL SYSTEM, SEE ATTIC PLAN AND MECHANICAL DWG'S FOR SIZE AND LOCATION ⚠
9. LIGHT FIXTURE, SEE REFLECTED CEILING AND ELECTRICAL PLANS
10. THEFT SENSOR, SEE FLOOR PLANS
11. CEMENT PLASTER SOFFIT OR CEILING, SEE REFLECTED CEILING PLANS
12. PAINTED METAL LOCKER, SEE FLOOR PLANS AND DETAIL **17/9.50** ⚠
13. HANDRAIL/GUARDRAIL AT STAIRWAYS (SHOWN "DASHED" FOR CLARITY AGAINST ADJACENT STRINGER CAP SYSTEM), SEE DETAILS **18 & 19B/10.01**
14. GUARDRAIL AT BREEZEWAYS , SEE DETAILS **17 & 19A/10.01**
15. SOFFIT VENT, SEE REFLECTED CEILING PLANS
16. EXPOSED DUCTWORK, SEE **MECH. DWG'S**

LEGEND

= STRUCTURAL STEEL BRACE FRAME, SEE STRUCTURAL DWG'S.

= RATED ASSEMBLY, SEE FLOOR PLAN FOR TYPE AND EXTENT

(A) = EXTERIOR WALL ASSEMBLY, SEE DETAIL **9/3.01**

A = HORIZONTAL ASSEMBLY, SEE DETAIL **18/3.01**

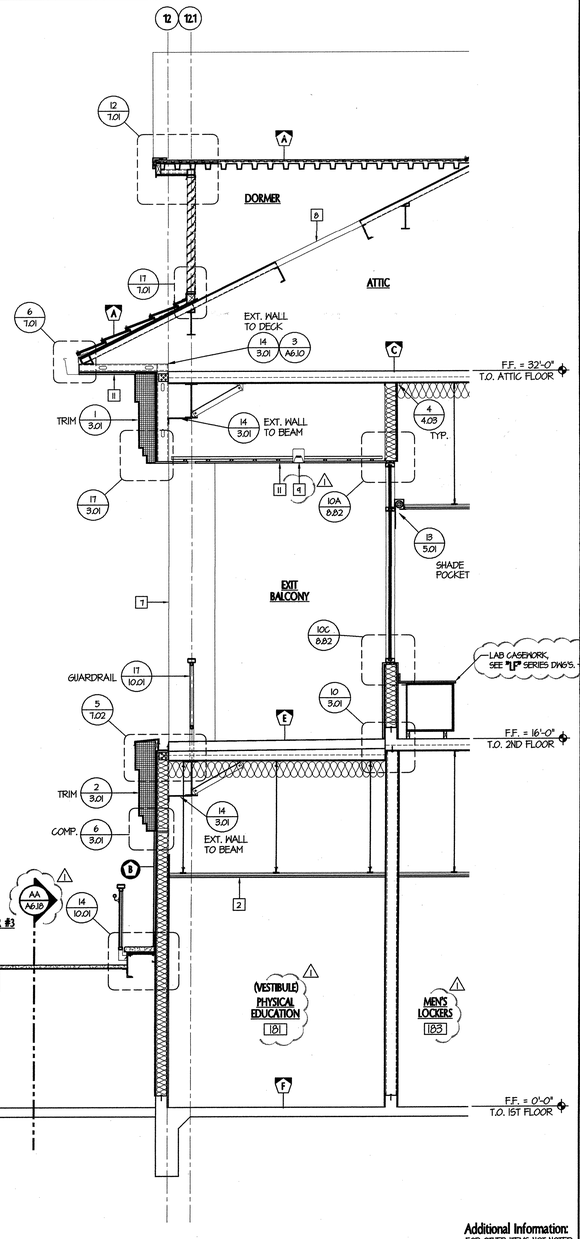

Additional Information:
FOR OTHER ITEMS NOT NOTED SEE DETAIL(S).
1/A6.12

WALL SECTION
SCALE: 3/8"= 1'-0"
H

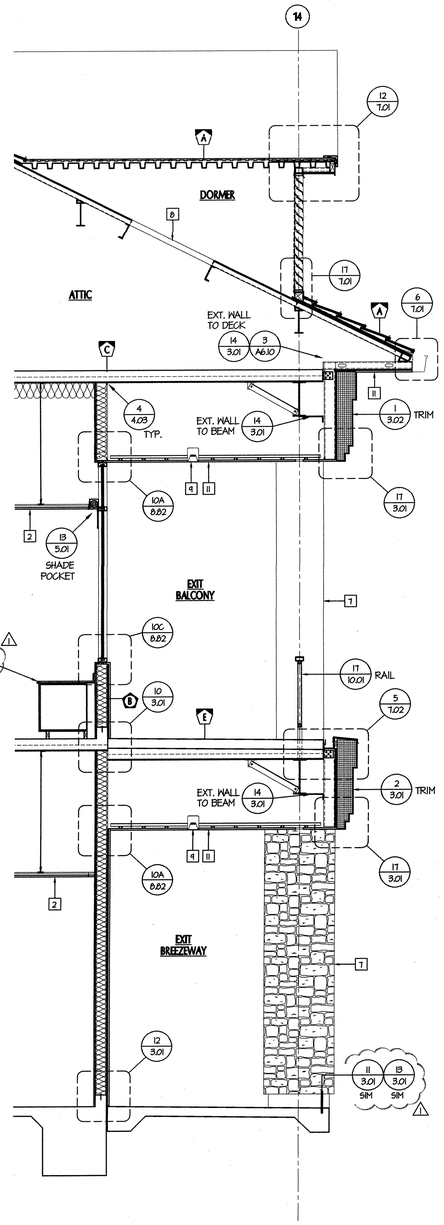

WALL SECTION
SCALE: 3/8"= 1'-0"
J

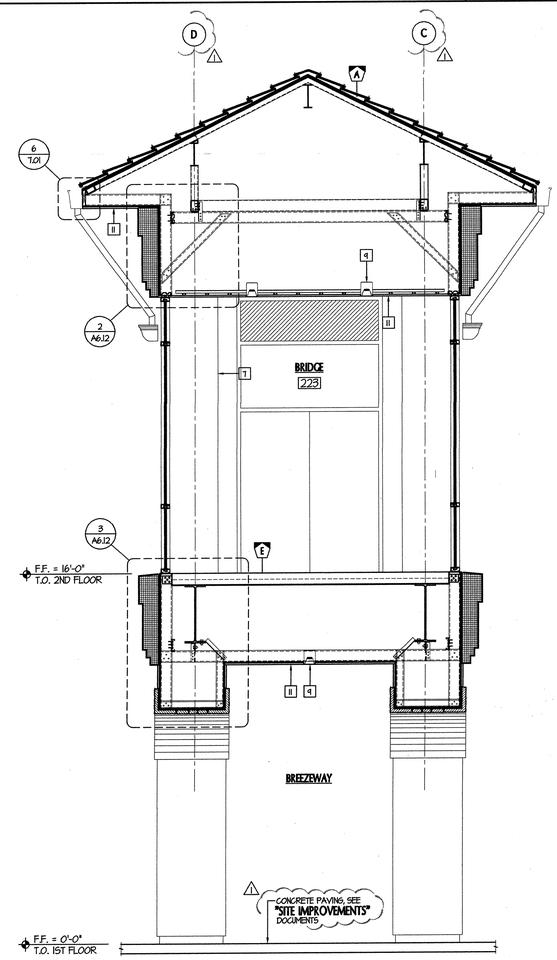

WALL SECTION
SCALE: 3/8"= 1'-0"
K

tBP
architecture
planning
interiors
management

tBP/Architecture
1000 Burnett Ave, Suite 140
Concord, CA 94520
ph: 925.246.6419 fx: 925.246.6495

architect

consultant

agency

APPROVED
APPROVING STAMP
DIV. OF THE STATE ARCHITECT
OFFICE OF REGIONAL SERVICES
APPL NO. 107178
BY
DATE 6-9-04

SAN RAMON VALLEY CENTER

CONTRA COSTA COMMUNITY COLLEGE DISTRICT

SAN RAMON, CALIFORNIA

owner

tBP project number : 20212.00
file name: A-0612_xsec.dwg
drawn by: MM checked by:
date: 03-09-04 plot scale: 1:1

Rev:	date:	description:
⚠	03-29-04	DESIGN CLARIFICATIONS

drawing title: WALL SECTIONS
building no.:

drawing no.: A6.12
drawing of

BE ABSOLUTELY DETERMINED TO ENJOY PRINT TO 20 X 24 (24)

Filename: A-0612CTN
Filename: A-0612CTN
Filename: A-0612CTC

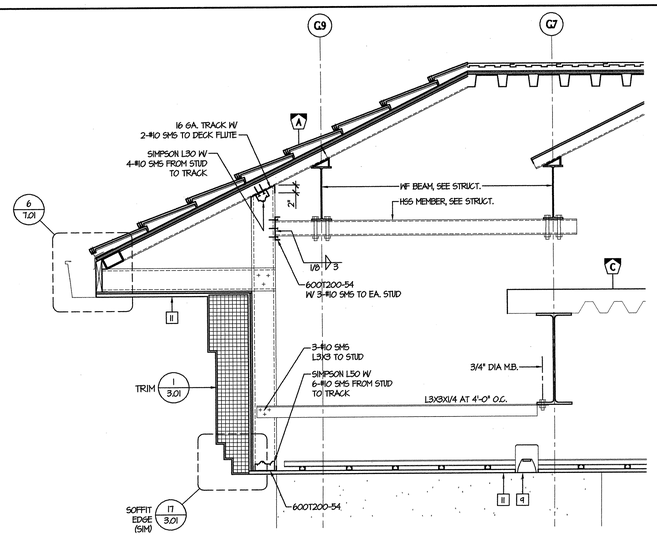

DETAIL 1
SCALE: 3/4"= 1'-0"

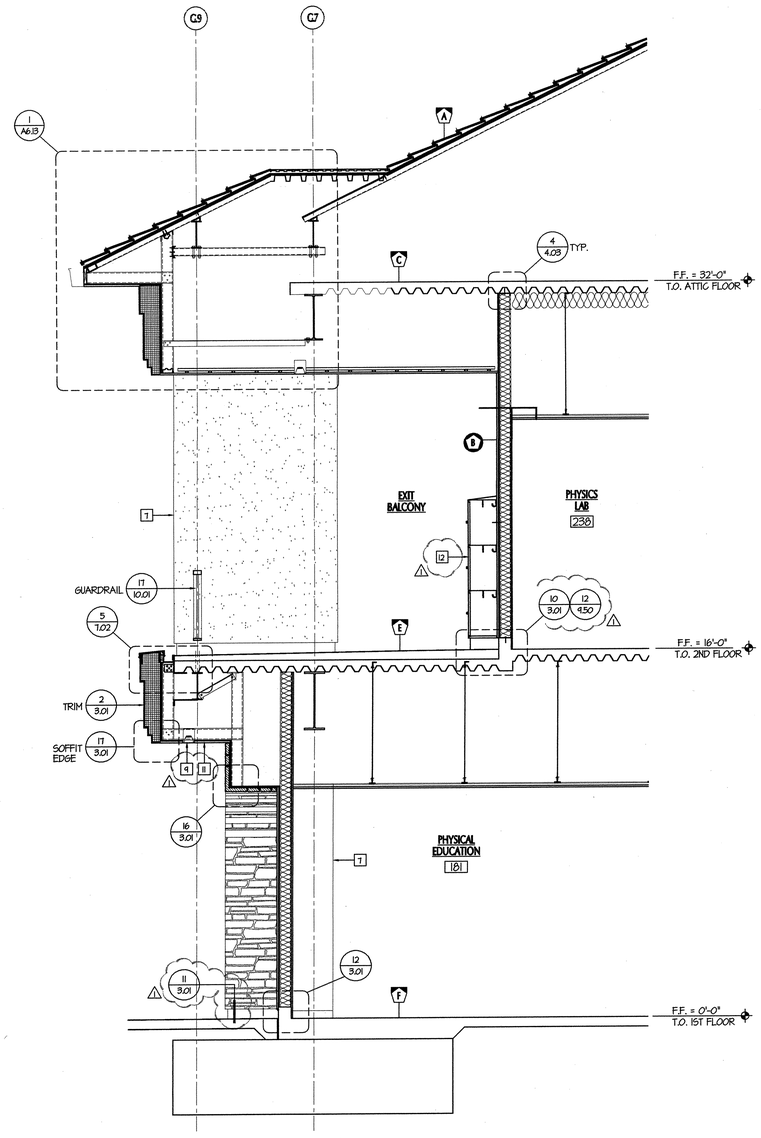

WALL SECTION L
SCALE: 3/8"= 1'-0"

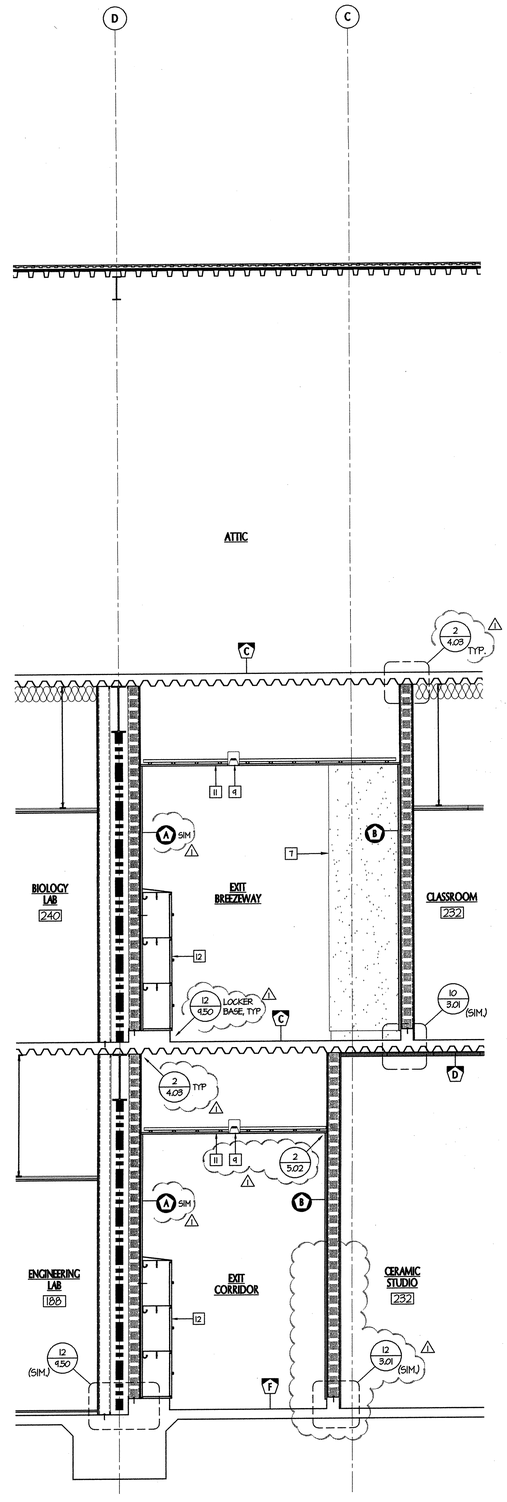

WALL SECTION M
SCALE: 3/8"= 1'-0"

GENERAL NOTES

1. FOR TYPICAL STEEL STUD FRAMING DETAILS, SEE SHEET **4.01**
2. FOR TYPICAL EAVE DIMENSIONS, SEE **D/A6.10** ⚠

KEYNOTES

1. EXPOSED STEEL FRAMING, PAINT FINISH, SEE STRUCTURAL
2. SUSPENDED CEILING SYSTEM, SEE REFLECTED CEILING PLANS AND ROOM FINISH SCHEDULE
3. GUARDRAIL IN UNOCCUPIED ATTIC, SEE ATTIC PLANS
4. GLAZED CURTAIN WALL SYSTEM, SEE PLANS & SCHEDULES
5. STEEL FRAMING SYSTEM, SEE STRUCTURAL FRAMING PLANS
6. BOOKSTACKS, SEE FLOOR PLANS
7. LINE OF FURRED COLUMN/WALL ENCLOSURE BEYOND
8. DECK OPENING FOR MECHANICAL SYSTEM, SEE ATTIC PLAN AND MECHANICAL DWG'S FOR SIZE AND LOCATION. ⚠
9. LIGHT FIXTURE, SEE REFLECTED CEILING AND ELECTRICAL PLANS
10. THEFT SENSOR, SEE FLOOR PLANS
11. CEMENT PLASTER SOFFIT OR CEILING, SEE REFLECTED CEILING PLANS
12. PAINTED METAL LOCKER, SEE FLOOR PLANS AND DETAIL **17/9.50** ⚠
13. HANDRAIL/GUARDRAIL AT STAIRWAYS (SHOWN "DASHED", FOR CLARITY AGAINST ADJACENT STRINGER CAP SYSTEM), SEE DETAILS **18 & 19B/10.01**
14. GUARDRAIL AT BREEZEWAYS , SEE DETAILS **17 & 19A/10.01**
15. SOFFIT VENT, SEE REFLECTED CEILING PLANS
16. EXPOSED DUCTWORK, SEE **MECH. DWG'S**

LEGEND

= STRUCTURAL STEEL BRACE FRAME, SEE STRUCTURAL DWGS.

= RATED ASSEMBLY, SEE FLOOR PLAN FOR TYPE AND EXTENT

= EXTERIOR WALL ASSEMBLY, SEE DETAIL **9/3.01**

= HORIZONTAL ASSEMBLY, SEE DETAIL **18/3.01**

tBP
architecture
planning
interiors
management

LICENSED ARCHITECT ROBERT W. KINNOLTY JR. No. C-14195 STATE OF CALIFORNIA

tBP/Architecture
1000 Bunett Ave, Suite 140
Concord, CA 94520
ph: 925.246.6419 fx: 925.246.6495

architect

consultant

APPROVED
CONTRACTOR'S STAMP
DEPT. OF THE STATE ARCHITECT
APPL. NO. 103719
BY: [signature]
DATE: 03-29-04

agency

SAN RAMON VALLEY CENTER
CONTRA COSTA COMMUNITY COLLEGE DISTRICT
SAN RAMON, CALIFORNIA

owner

tBP project number : 20212.00
file name: A-0613_wsec.dwg
drawn by: MM checked by:
date: 03-04-04 plot scale: 1:1

Rev:	date:	description:
⚠	03-29-04	DESIGN CLARIFICATIONS

drawing title: WALL SECTIONS
building no:

drawing no: A6.13
drawing of

BE ABSOLUTELY DETERMINED TO ENJOY WHAT YOU DO (03-24-04)

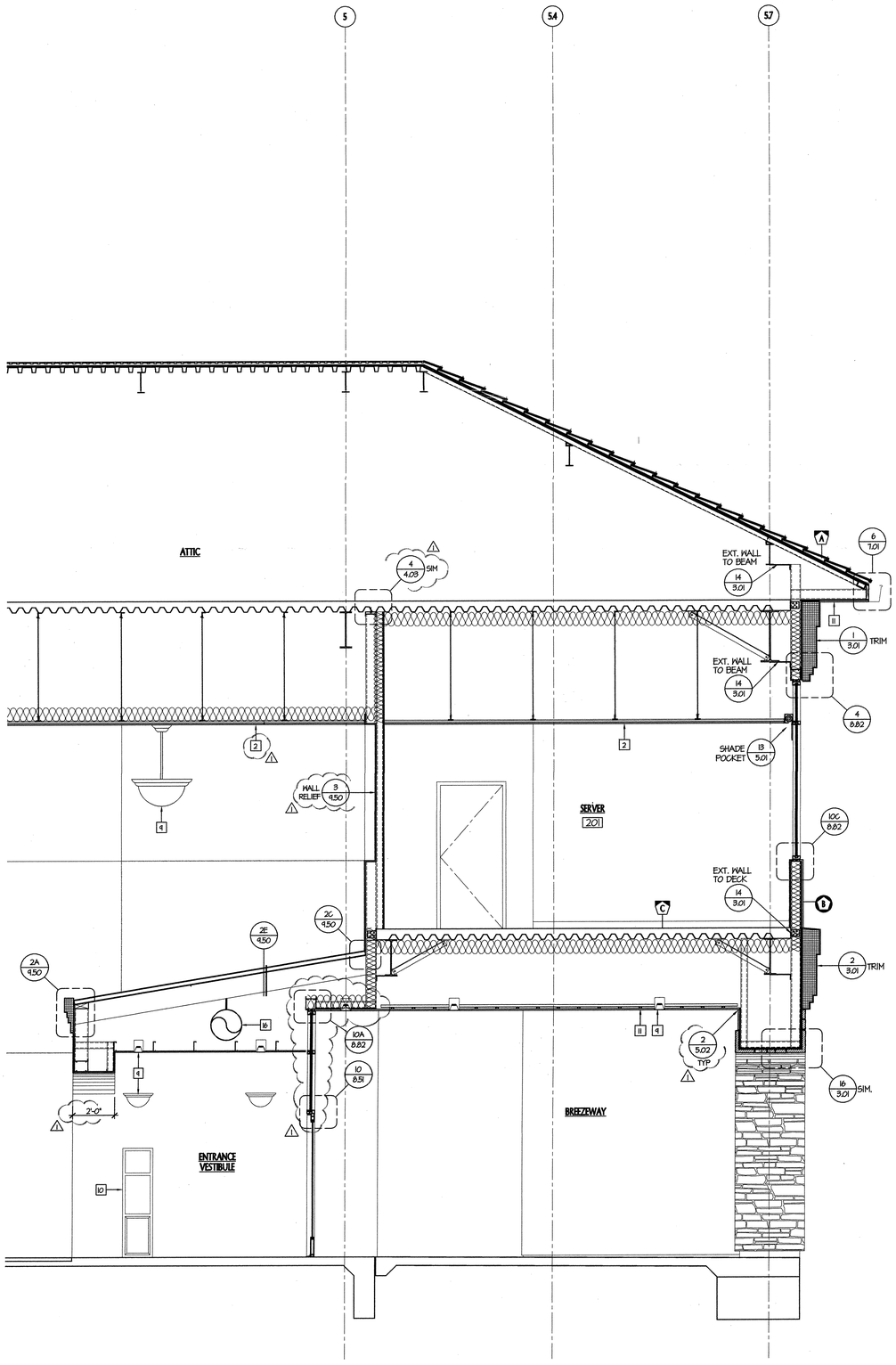

WALL SECTION
SCALE: 3/8"= 1'-0"

N

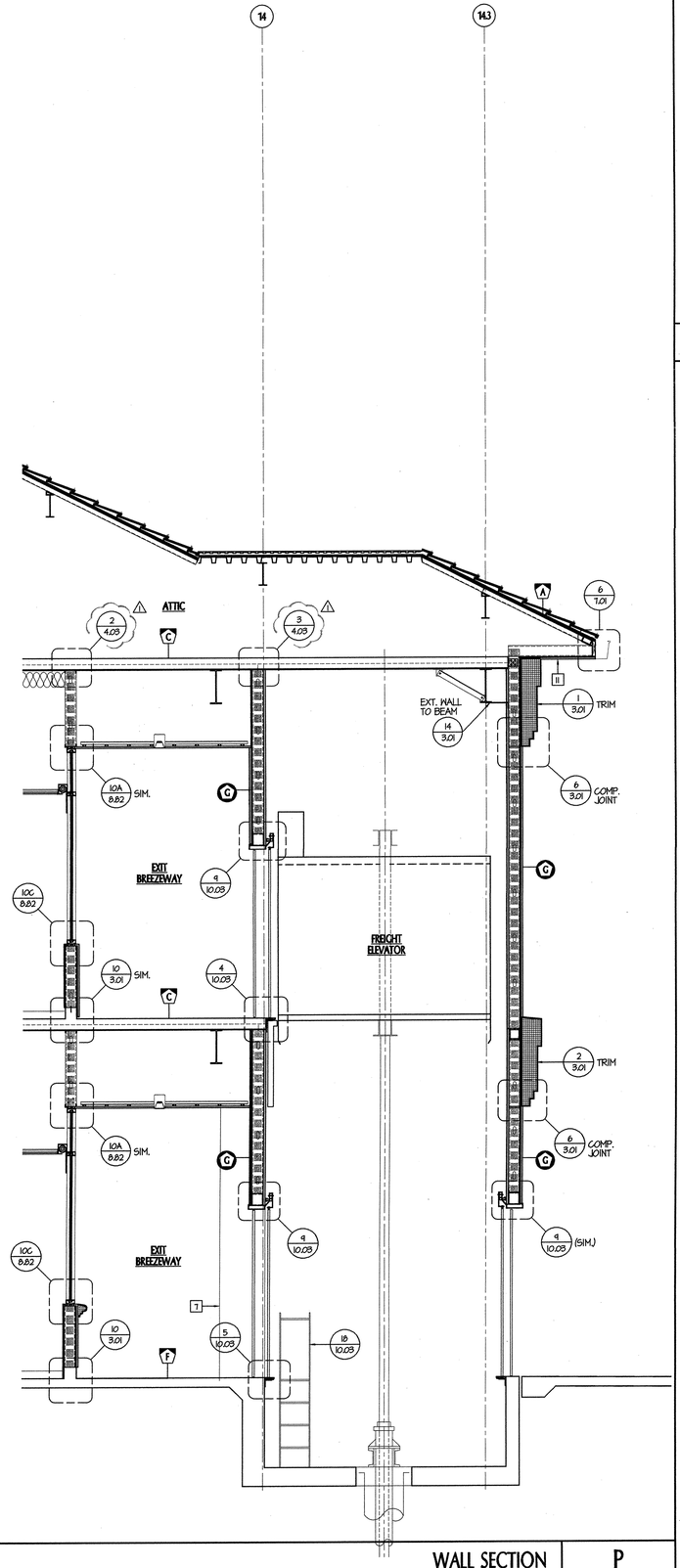

WALL SECTION
SCALE: 3/8"= 1'-0"

P

GENERAL NOTES

1. FOR TYPICAL STEEL STUD FRAMING DETAILS, SEE SHEET **4.01**
2. FOR TYPICAL EAVE DIMENSIONS, SEE **D/A6.10** ⚠

KEYNOTES

1. EXPOSED STEEL FRAMING, PAINT FINISH, SEE STRUCTURAL
2. SUSPENDED CEILING SYSTEM, SEE REFLECTED CEILING PLANS AND ROOM FINISH SCHEDULE
3. GUARDRAIL IN UNOCCUPIED ATTIC, SEE ATTIC PLANS
4. GLAZED CURTAIN WALL SYSTEM, SEE PLANS & SCHEDULES
5. STEEL FRAMING SYSTEM, SEE STRUCTURAL FRAMING PLANS
6. BOOKSTACKS, SEE FLOOR PLANS
7. LINE OF FURRED COLUMN/WALL ENCLOSURE BEYOND
8. DECK OPENING FOR MECHANICAL SYSTEM, SEE ATTIC PLAN AND MECHANICAL DWGS FOR SIZE AND LOCATION ⚠
9. LIGHT FIXTURE, SEE REFLECTED CEILING AND ELECTRICAL PLANS
10. THEFT SENSOR, SEE FLOOR PLANS
11. CEMENT PLASTER SOFFIT OR CEILING, SEE REFLECTED CEILING PLANS
12. PAINTED METAL LOCKER, SEE FLOOR PLANS AND DETAIL **17/9.50** ⚠
13. HANDRAIL/GUARDRAIL AT STAIRWAYS (SHOWN "DASHED". FOR CLARITY AGAINST ADJACENT STRINGER CAP SYSTEM), SEE DETAILS **18 & 19B/10.01**
14. GUARDRAIL AT BREEZEWAYS , SEE DETAILS **17 & 19A/10.01**
15. SOFFIT VENT, SEE REFLECTED CEILING PLANS
16. EXPOSED DUCTWORK, SEE **MECH. DWG'S**

LEGEND

= STRUCTURAL STEEL BRACE FRAME, SEE STRUCTURAL DWG'S.

= RATED ASSEMBLY, SEE FLOOR PLAN FOR TYPE AND EXTENT

= EXTERIOR WALL ASSEMBLY, SEE DETAIL **9/3.01**

= HORIZONTAL ASSEMBLY, SEE DETAIL **18/3.01**

tBP
architecture
planning
interiors
management

LICENSED ARCHITECT RICHARD L. WEINMANN No. C-9885 EXP. 08-31-05 STATE OF CALIFORNIA

tBP/Architecture
1000 Burnett Ave, Suite 140
Concord, CA 94520
ph: 925.246.6419 fx: 925.246.6495

architect
consultant
agency
owner

APPROVED
DEPARTMENT OF THE STATE ARCHITECT
OFFICE OF REGIONAL SERVICES
APPL NO. 1-107119
BY: [signature]
DATE: 6-9-04

SAN RAMON VALLEY CENTER

CONTRA COSTA COMMUNITY COLLEGE DISTRICT

SAN RAMON, CALIFORNIA

tBP project number : 20212.00
file name: A-0614_wsec.dwg
drawn by: MM checked by:
date: 03-01-04 plot scale: 1:1

Rev:	date:	description:
⚠	03-29-04	DESIGN CLARIFICATIONS

drawing title: WALL SECTIONS
building no:

drawing no: A6.14
drawing of

Filename: A-B6EGTB

Filename: A-B6EGTM

BY ARCHITECTS OF CERTIFIED TO ENJOY WHAT YOU DO! 03.24.04

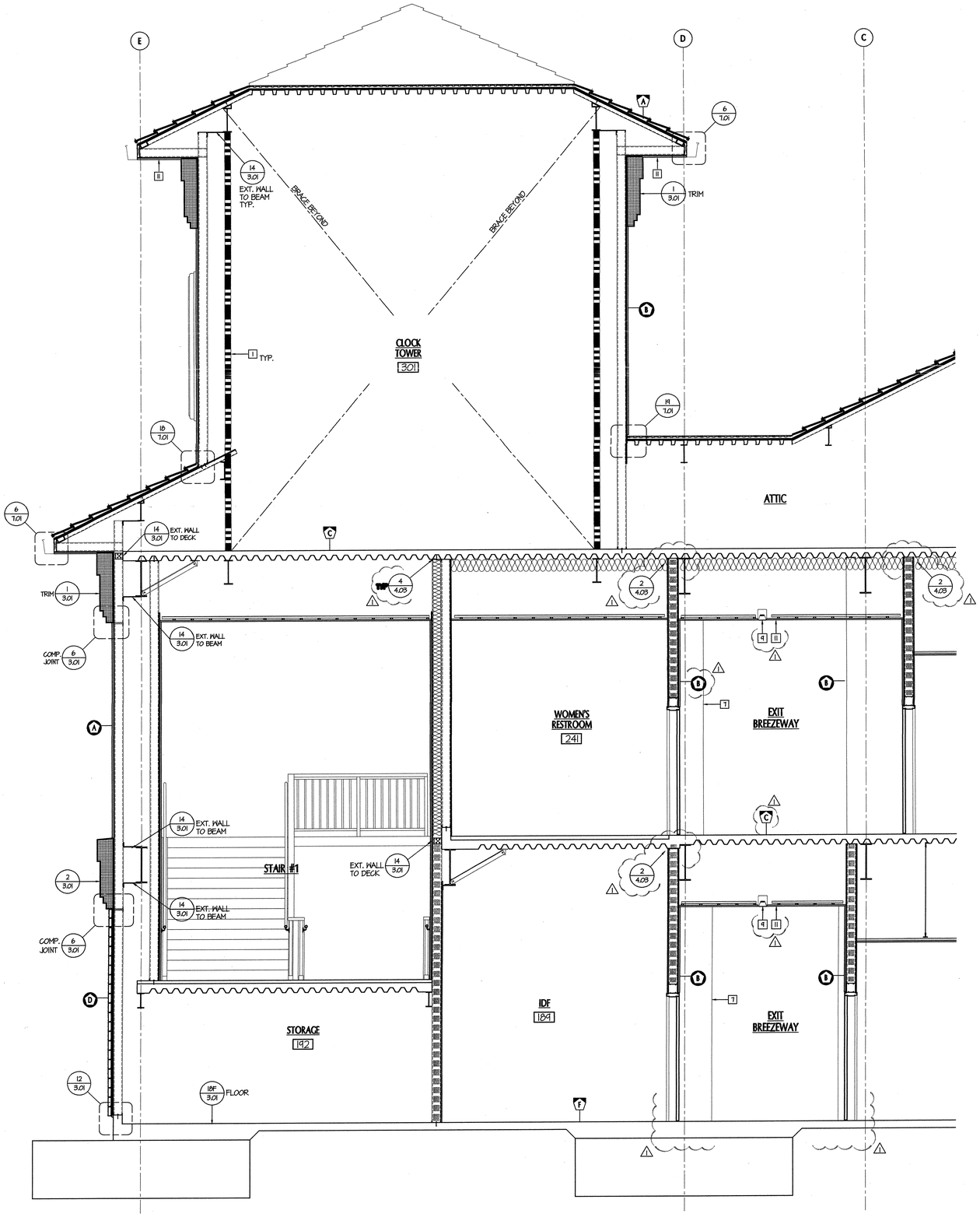

WALL SECTION
SCALE: 3/8" = 1'-0"

Q

Filename: A-BSECT.TIF

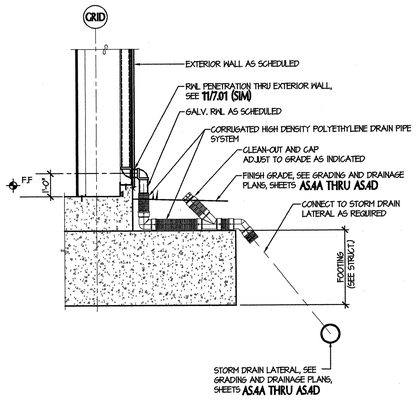

RWL CONNECTION TO STORM DRAIN
SCALE: 1/2" = 1'-0"

1

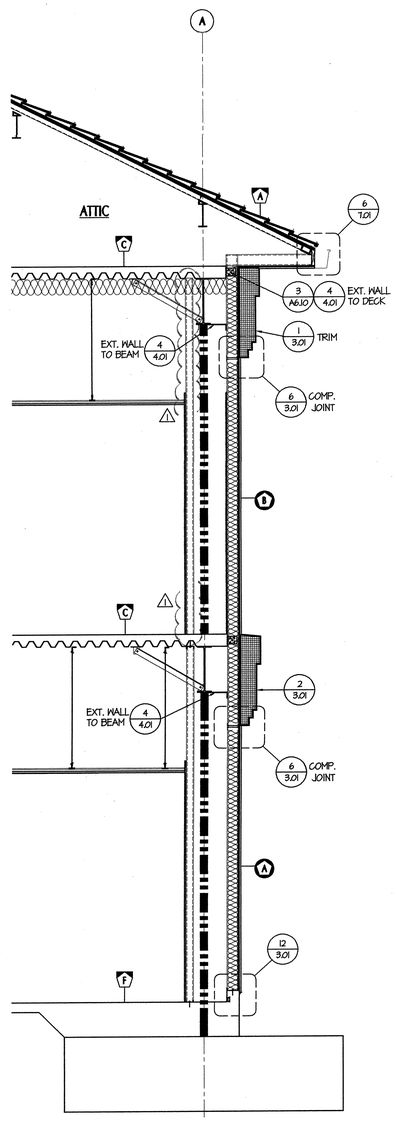

WALL SECTION
SCALE: 3/8" = 1'-0"

R

Filename: A-BSECT.TIF

GENERAL NOTES

1. FOR TYPICAL STEEL STUD FRAMING DETAILS, SEE SHEET **4.01**
2. FOR TYPICAL EAVE DIMENSIONS, SEE **D/A6.10** △1

KEYNOTES

1. EXPOSED STEEL FRAMING, PAINT FINISH, SEE STRUCTURAL
2. SUSPENDED CEILING SYSTEM, SEE REFLECTED CEILING PLANS AND ROOM FINISH SCHEDULE
3. GUARDRAIL IN UNOCCUPIED ATTIC, SEE ATTIC PLANS
4. GLAZED CURTAIN WALL SYSTEM, SEE PLANS & SCHEDULES
5. STEEL FRAMING SYSTEM, SEE STRUCTURAL FRAMING PLANS
6. BOOKSTACKS, SEE FLOOR PLANS
7. LINE OF FURRED COLUMN/WALL ENCLOSURE BEYOND
8. DECK OPENING FOR MECHANICAL SYSTEM, SEE ATTIC PLAN AND MECHANICAL DWG'S FOR SIZE AND LOCATION △1
9. LIGHT FIXTURE, SEE REFLECTED CEILING AND ELECTRICAL PLANS
10. THEFT SENSOR, SEE FLOOR PLANS
11. CEMENT PLASTER SOFFIT OR CEILING, SEE REFLECTED CEILING PLANS
12. PAINTED METAL LOCKER, SEE FLOOR PLANS AND DETAIL **17/9.50** △1
13. HANDRAIL/GUARDRAIL AT STAIRWAYS (SHOWN "DASHED". FOR CLARITY AGAINST ADJACENT STRINGER CAP SYSTEM), SEE DETAILS **18 & 19B/10.01**
14. GUARDRAIL AT BREEZEWAYS , SEE DETAILS **17 & 19A/10.01**
15. SOFFIT VENT, SEE REFLECTED CEILING PLANS
16. EXPOSED DUCTWORK, SEE **MECH. DWG'S**

LEGEND

= STRUCTURAL STEEL BRACE FRAME, SEE STRUCTURAL DWGS.

= RATED ASSEMBLY, SEE FLOOR PLAN FOR TYPE AND EXTENT

(A) = EXTERIOR WALL ASSEMBLY, SEE DETAIL **9/3.01**

(A) = HORIZONTAL ASSEMBLY, SEE DETAIL **18/3.01**

tBP
architecture
planning
interiors
management

LICENSED ARCHITECT REGISTERED PROFESSIONAL ENGINEER STATE OF CALIFORNIA RENEWAL 08-31-05 NO. C-6885

tBP/Architecture
1000 Burnett Ave, Suite 140
Concord, CA 94520
ph: 925.246.6419 fx: 925.246.6495

architect

consultant

APPROVED
DEPARTMENT OF STATE ARCHITECT
DIVISION OF REGULATION SERVICES
APPL NO. 01-105719
ACCT. 113.20.55
DATE 6-24-04

agency

SAN RAMON VALLEY CENTER

CONTRA COSTA COMMUNITY COLLEGE DISTRICT

SAN RAMON, CALIFORNIA

owner

tBP project number : 20212.00
file name: A-0615_xsec.dwg
drawn by: MM checked by:
date: 03-09-04 plot scale: 1:1

Rev:	date:	description:
△1	03-24-04	DESIGN CLARIFICATIONS

drawing title: WALL SECTIONS
building no.:

drawing no.: A6.15
drawing of

BE ABSOLUTELY DETERMINED TO ENJOY ANNA'S 1ST BIRTHDAY

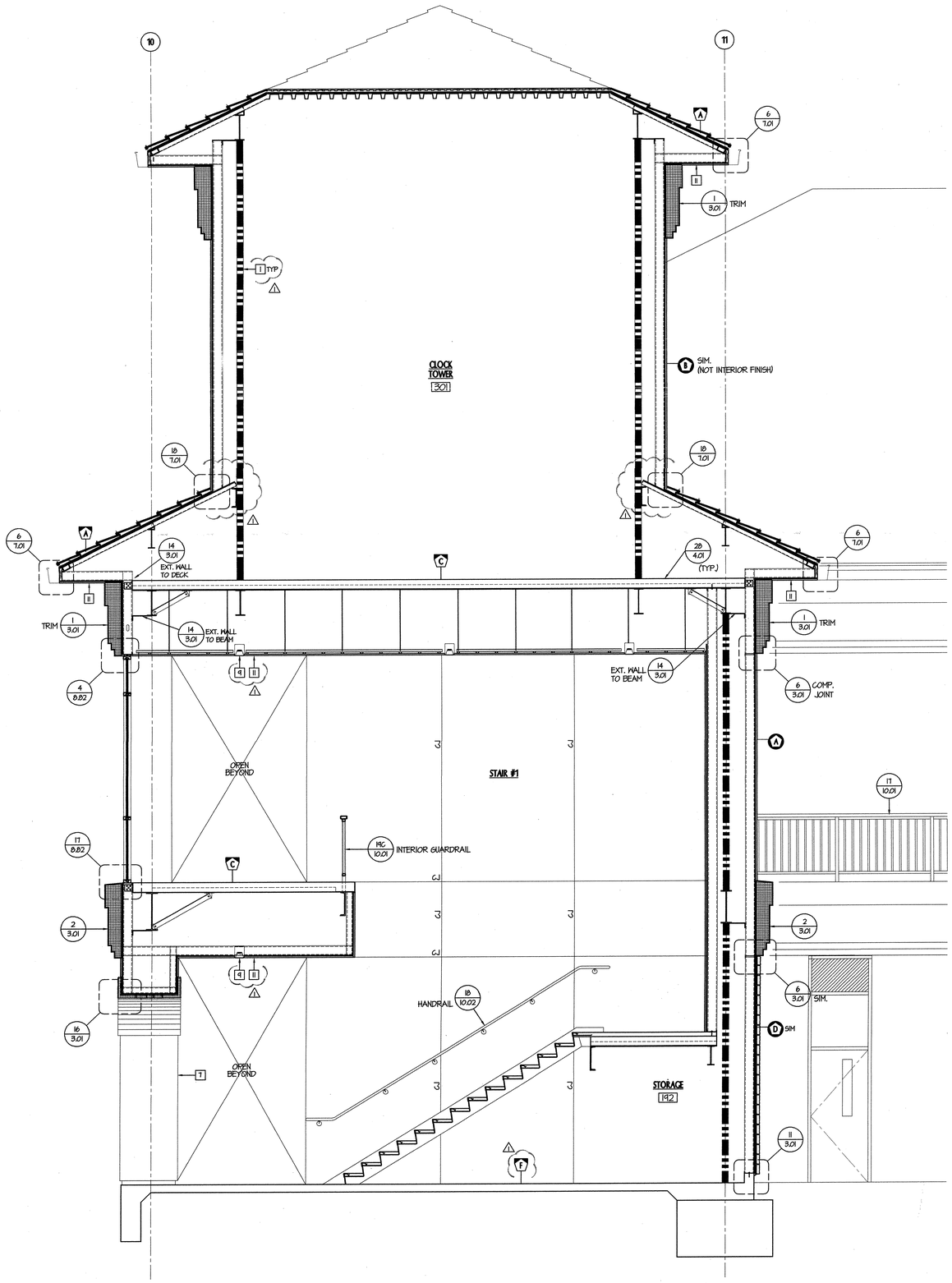

WALL SECTION
SCALE: 3/8" = 1'-0"
S

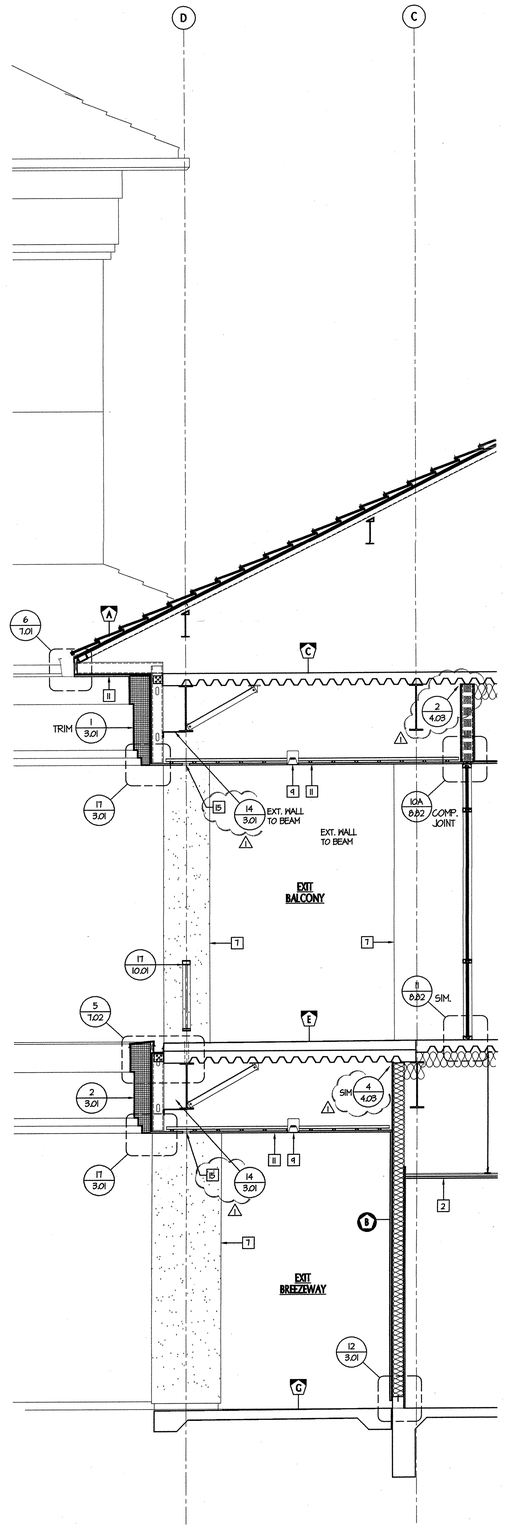

WALL SECTION
SCALE: 3/8" = 1'-0"
T

GENERAL NOTES

1. FOR TYPICAL STEEL STUD FRAMING DETAILS, SEE SHEET **4.01**
2. FOR TYPICAL EAVE DIMENSIONS, SEE **D/A6.10**

KEYNOTES

1. EXPOSED STEEL FRAMING, PAINT FINISH, SEE STRUCTURAL
2. SUSPENDED CEILING SYSTEM, SEE REFLECTED CEILING PLANS AND ROOM FINISH SCHEDULE
3. GUARDRAIL IN UNOCCUPIED ATTIC, SEE ATTIC PLANS
4. GLAZED CURTAIN WALL SYSTEM, SEE PLANS & SCHEDULES
5. STEEL FRAMING SYSTEM, SEE STRUCTURAL FRAMING PLANS
6. BOOKSTACKS, SEE FLOOR PLANS
7. LINE OF FURRED COLUMNWALL ENCLOSURE BEYOND
8. DECK OPENING FOR MECHANICAL SYSTEM, SEE ATTIC PLAN AND MECHANICAL DWG'S FOR SIZE AND LOCATION.
9. LIGHT FIXTURE, SEE REFLECTED CEILING AND ELECTRICAL PLANS
10. THEFT SENSOR, SEE FLOOR PLANS
11. CEMENT PLASTER SOFFIT OR CEILING, SEE REFLECTED CEILING PLANS
12. PAINTED METAL LOCKER, SEE FLOOR PLANS AND DETAIL **17/9.50**
13. HANDRAIL/GUARDRAIL AT STAIRWAYS (SHOWN "DASHED"; FOR CLARITY AGAINST ADJACENT STRINGER CAP SYSTEM), SEE DETAILS **18 & 19B/10.01**
14. GUARDRAIL AT BREEZEWAYS, SEE DETAILS **17 & 19A/10.01**
15. SOFFIT VENT, SEE REFLECTED CEILING PLANS
16. EXPOSED DUCTWORK, SEE **MECH. DWG'S**

LEGEND

= STRUCTURAL STEEL BRACE FRAME, SEE STRUCTURAL DWG'S.

= RATED ASSEMBLY, SEE FLOOR PLAN FOR TYPE AND EXTENT

= EXTERIOR WALL ASSEMBLY, SEE DETAIL **9/3.01**

= HORIZONTAL ASSEMBLY, SEE DETAIL **18/3.01**

tBP
architecture
planning
interiors
management

tBP/Architecture
1000 Burnett Ave, Suite 140
Concord, CA 94520
ph: 925.246.6419 fx: 925.246.6495

architect

consultant

agency

SAN RAMON VALLEY CENTER

CONTRA COSTA COMMUNITY COLLEGE DISTRICT

SAN RAMON, CALIFORNIA

owner

tBP project number: 20212.00

file name: A-0616_wsec.dwg

drawn by: MM checked by:

date: 03-09-04 plot scale: 1:1

Rev:	date:	description:
1	03-29-04	DESIGN CLARIFICATIONS

drawing title: building no.:

WALL SECTIONS

drawing no.:

A6.16

drawing of

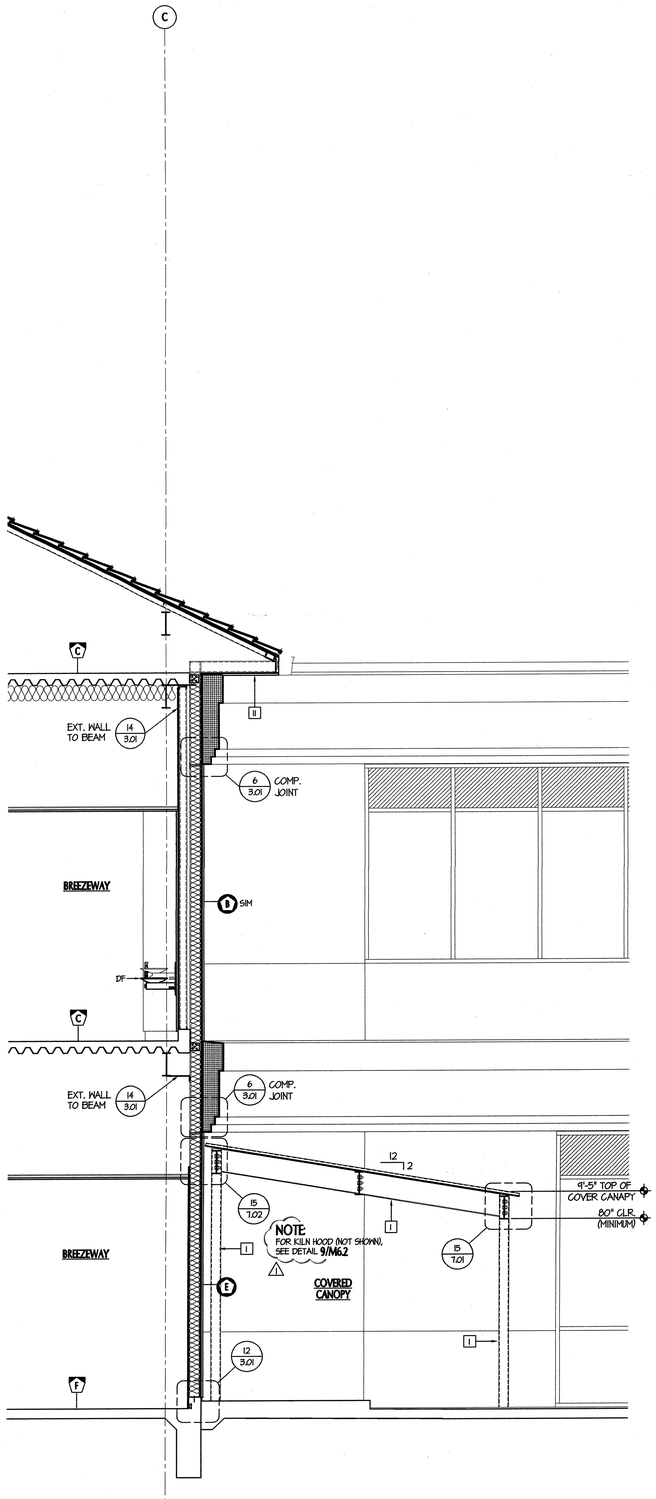

WALL SECTION
SCALE: 3/8"= 1'-0"

U

Filename: A-BSECTP

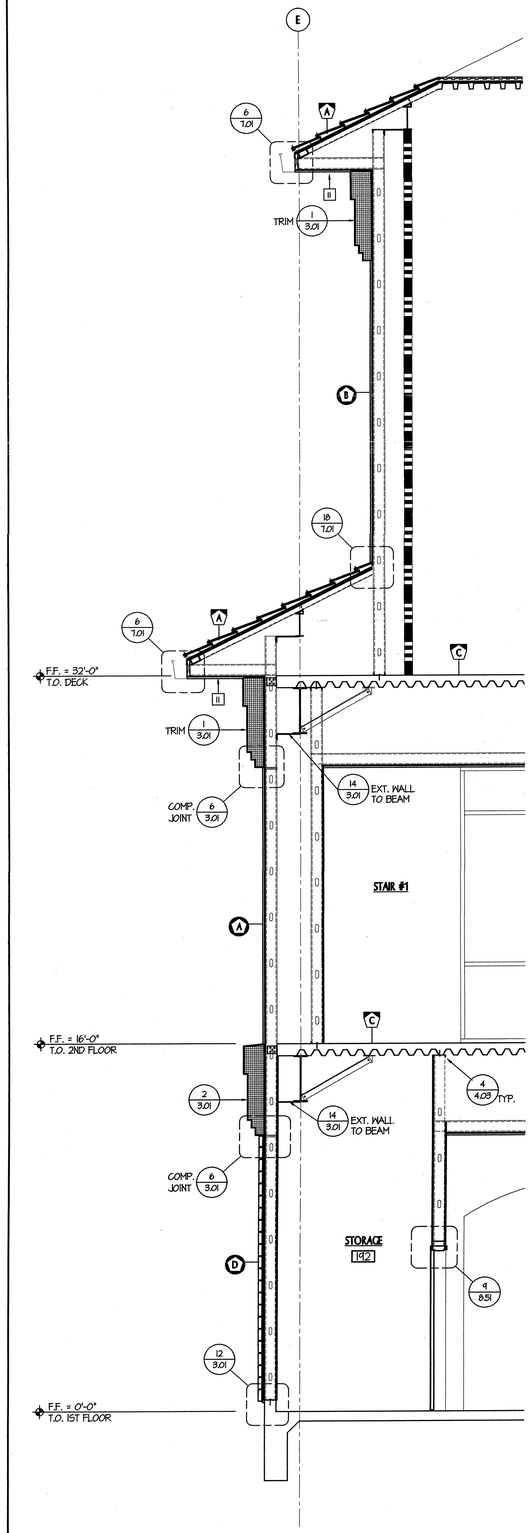

WALL SECTION
SCALE: 3/8"= 1'-0"

V

Filename: A-BSECTL

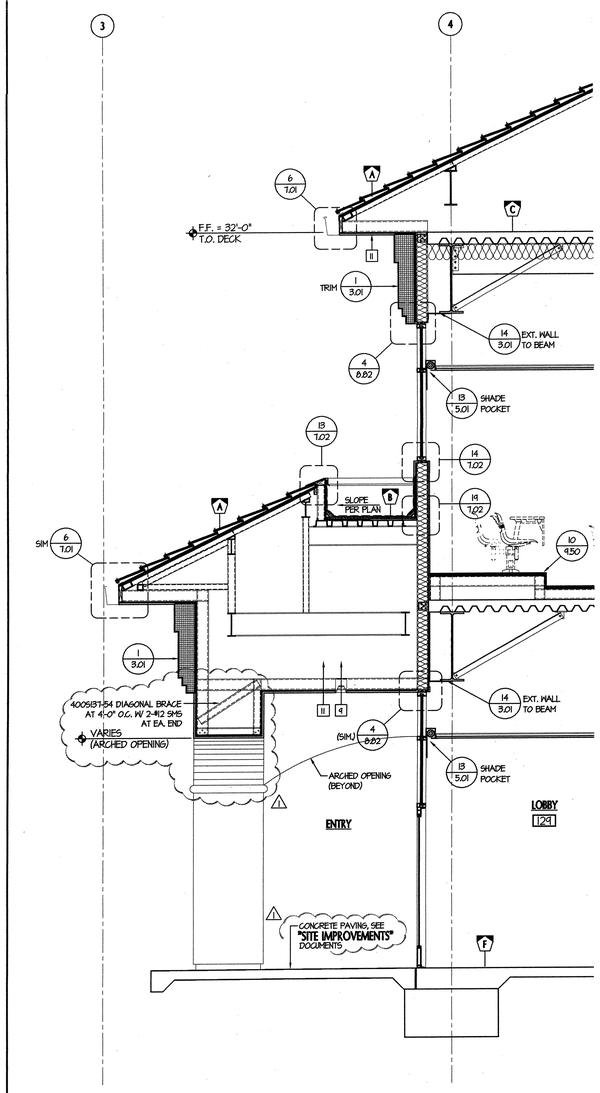

WALL SECTION
SCALE: 3/8"= 1'-0"

W

Filename: A-BSECTO

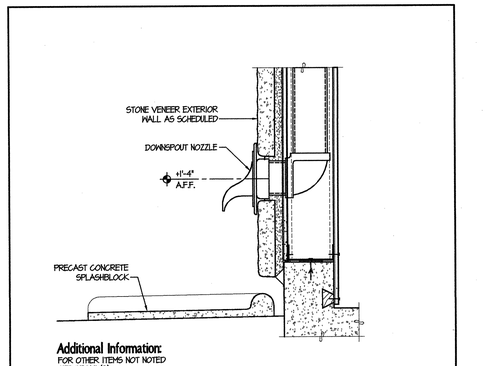

Additional Information:
FOR OTHER ITEMS NOT NOTED SEE DETAIL(S).
11/3.01

RWL SPOUT THRU STONE VENEER WALL
SCALE: 1 1/2" = 1'-0"
1

GENERAL NOTES

1. FOR TYPICAL STEEL STUD FRAMING DETAILS, SEE SHEET **4.01**
2. FOR TYPICAL EAVE DIMENSIONS, SEE **D/A6.10** △

KEYNOTES

1. EXPOSED STEEL FRAMING, PAINT FINISH, SEE STRUCTURAL
2. SUSPENDED CEILING SYSTEM, SEE REFLECTED CEILING PLANS AND ROOM FINISH SCHEDULE
3. GUARDRAIL IN UNOCCUPIED ATTIC, SEE ATTIC PLANS
4. GLAZED CURTAIN WALL SYSTEM, SEE PLANS & SCHEDULES
5. STEEL FRAMING SYSTEM, SEE STRUCTURAL FRAMING PLANS
6. BOOKSTACKS, SEE FLOOR PLANS
7. LINE OF FURRED COLUMN/WALL ENCLOSURE BEYOND
8. DECK OPENING FOR MECHANICAL SYSTEM, SEE ATTIC PLAN AND MECHANICAL DWGS FOR SIZE AND LOCATION. △
9. LIGHT FIXTURE, SEE REFLECTED CEILING AND ELECTRICAL PLANS
10. THEFT SENSOR, SEE FLOOR PLANS
11. CEMENT PLASTER SOFFIT OR CEILING, SEE REFLECTED CEILING PLANS
12. PAINTED METAL LOCKER, SEE FLOOR PLANS AND DETAIL **17/9.50** △
13. HANDRAIL/GUARDRAIL AT STAIRWAYS (SHOWN "DASHED". FOR CLARITY AGAINST ADJACENT STRINSER GAP SYSTEM), SEE DETAILS **18 & 19B/10.01**
14. GUARDRAIL AT BREEZEWAYS , SEE DETAILS **17 & 19A/10.01**
15. SOFFIT VENT, SEE REFLECTED CEILING PLANS
16. EXPOSED DUCTWORK, SEE **MECH. DWG'S**

LEGEND

= STRUCTURAL STEEL BRACE FRAME, SEE STRUCTURAL DWG'S.

= RATED ASSEMBLY, SEE FLOOR PLAN FOR TYPE AND EXTENT

= EXTERIOR WALL ASSEMBLY, SEE DETAIL **9/3.01**

= HORIZONTAL ASSEMBLY, SEE DETAIL **18/3.01**

tBP
architecture
planning
interiors
management

LICENSED ARCHITECT RICHARD A. THOMAS RENEWAL 08/31/2005 No. C-14886 STATE OF CALIFORNIA

tBP/Architecture
1000 Burnett Ave, Suite 140
Concord, CA 94520
ph: 925.246.6419 fx: 925.246.6495

architect

consultant

APPROVED
REPRODUCTION STAMP
DIV. OF THE STATE ARCHITECT
OFFICE OF REGULATION SERVICES
APP. NO. 109719
DATE 12-15-04

agency

SAN RAMON VALLEY CENTER
CONTRA COSTA COMMUNITY COLLEGE DISTRICT
SAN RAMON, CALIFORNIA

owner

tBP project number : 20212.00
file name: A-0617_wsec.dwg
drawn by: MM checked by:
date: 03-09-04 plot scale: 1:1

Rev:	date:	description:
△	03-24-04	DESIGN CLARIFICATIONS

drawing title: WALL SECTIONS
building no.:

drawing no.: A6.17
drawing of

BE ABSOLUTELY DETERMINED TO ENJOY WHAT YOU DO (DEEPAK)

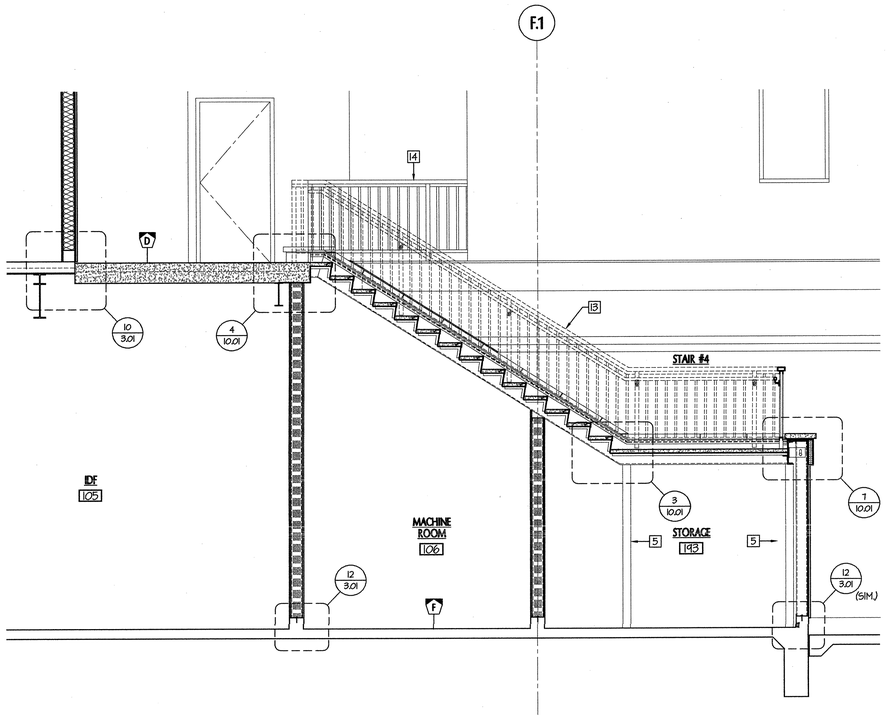

WALL SECTION X
SCALE: 3/8"= 1'-0"

Filename: A-ESECTE

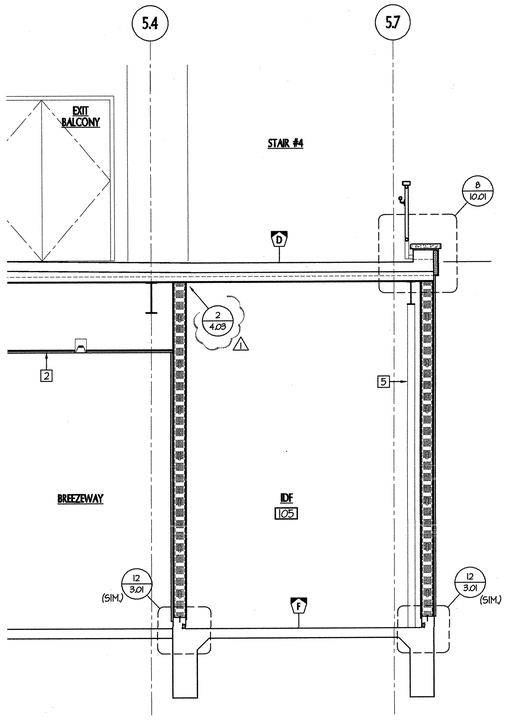

WALL SECTION Y
SCALE: 3/8"= 1'-0"

Filename: A-ESECTG

GENERAL NOTES

1. FOR TYPICAL STEEL STUD FRAMING DETAILS, SEE SHEET **4.01**
2. FOR TYPICAL EAVE DIMENSIONS, SEE **D/A6.10** ⚠

KEYNOTES

1. EXPOSED STEEL FRAMING, PAINT FINISH, SEE STRUCTURAL
2. SUSPENDED CEILING SYSTEM, SEE REFLECTED CEILING PLANS AND ROOM FINISH SCHEDULE
3. GUARDRAIL IN UNOCCUPIED ATTIC, SEE ATTIC PLANS
4. GLAZED CURTAIN WALL SYSTEM, SEE PLANS & SCHEDULES
5. STEEL FRAMING SYSTEM, SEE STRUCTURAL FRAMING PLANS
6. BOOKSTACKS, SEE FLOOR PLANS
7. LINE OF FURRED COLUMN/WALL ENCLOSURE BEYOND
8. DECK OPENING FOR MECHANICAL SYSTEM, SEE ATTIC PLAN AND MECHANICAL DWGS FOR SIZE AND LOCATION ⚠
9. LIGHT FIXTURE, SEE REFLECTED CEILING AND ELECTRICAL PLANS
10. THEFT SENSOR, SEE FLOOR PLANS
11. CEMENT PLASTER SOFFIT OR CEILING, SEE REFLECTED CEILING PLANS
12. PAINTED METAL LOCKER, SEE FLOOR PLANS AND DETAIL **17/9.50** ⚠
13. HANDRAIL/GUARDRAIL AT STAIRWAYS (SHOWN "DASHED". FOR CLARITY AGAINST ADJACENT STRINGER CAP SYSTEM), SEE DETAILS **18 & 19B/10.01**
14. GUARDRAIL AT BREEZEWAYS , SEE DETAILS **17 & 19A/10.01**
15. SOFFIT VENT, SEE REFLECTED CEILING PLANS
16. EXPOSED DUCTWORK, SEE **MECH. DWG'S**

LEGEND

= STRUCTURAL STEEL BRACE FRAME, SEE STRUCTURAL DWGS.

= RATED ASSEMBLY, SEE FLOOR PLAN FOR TYPE AND EXTENT

= EXTERIOR WALL ASSEMBLY, SEE DETAIL **9/3.01**

= HORIZONTAL ASSEMBLY, SEE DETAIL **18/3.01**

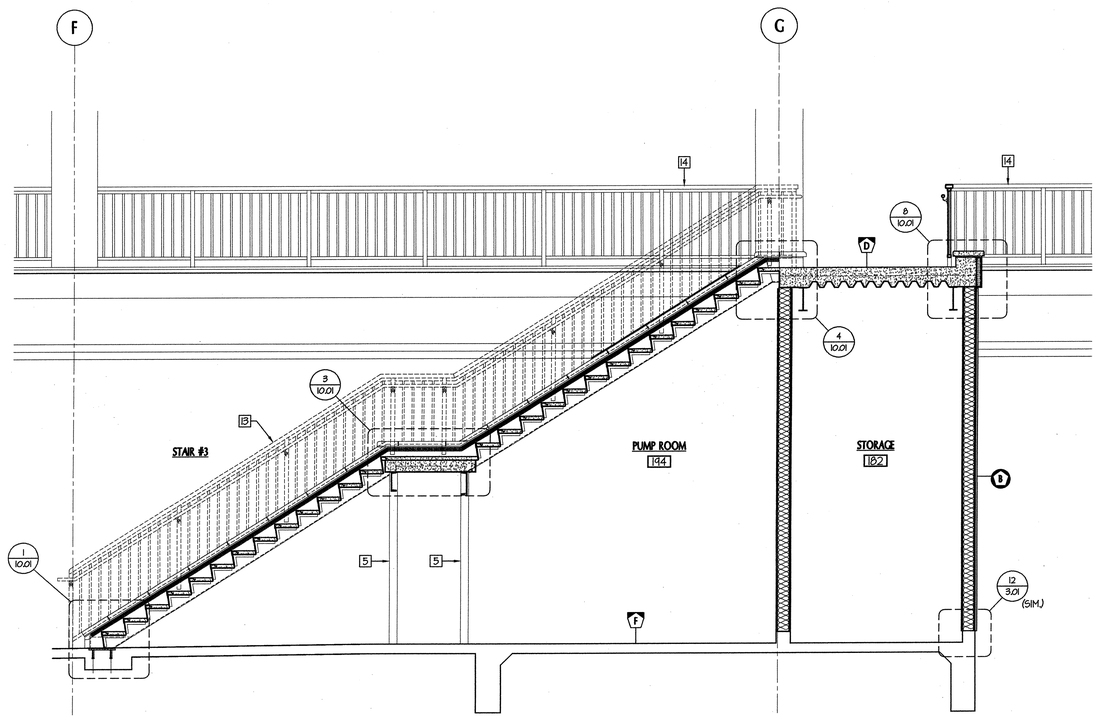

WALL SECTION AA
SCALE: 3/8"= 1'-0"

Filename: A-WEECT

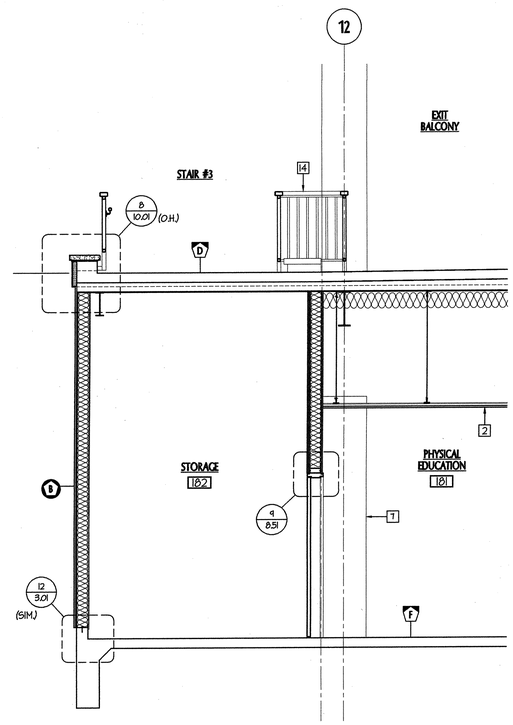

WALL SECTION BB
SCALE: 3/8"= 1'-0"

Filename: A-ESECTH2

tBP
architecture
planning
interiors
management

LICENSED ARCHITECTS RENEWAL 31 DEC. 2005 STATE OF CALIFORNIA

tBP/Architecture
1000 Burnett Ave, Suite 140
Concord, CA 94520
ph: 925.246.6419 fx: 925.246.6495

architect

consultant

APPROVED
DIVISION OF THE STATE ARCHITECT
OFFICE OF REGIONAL SERVICES
APPL. NO. 102719
BY: [signature]
DATE: 8-4-04

agency

SAN RAMON VALLEY CENTER

CONTRA COSTA COMMUNITY COLLEGE DISTRICT

SAN RAMON, CALIFORNIA

owner

tBP project number : 20212.00
file name: A-0618_wsec.dwg
drawn by: MM checked by:
date: 03-09-04 plot scale: 1:1

Rev:	date:	description:
⚠	03-29-04	DESIGN CLARIFICATIONS

drawing title: WALL SECTIONS
building no.:

drawing no.: A6.18
drawing of

PLOTTED: 8/3/2004 10:07:10 AM BY: MARK MOLINARI FILE: C:\PROJECTS\20212.00\DWG\A-0618_WSEC.DWG

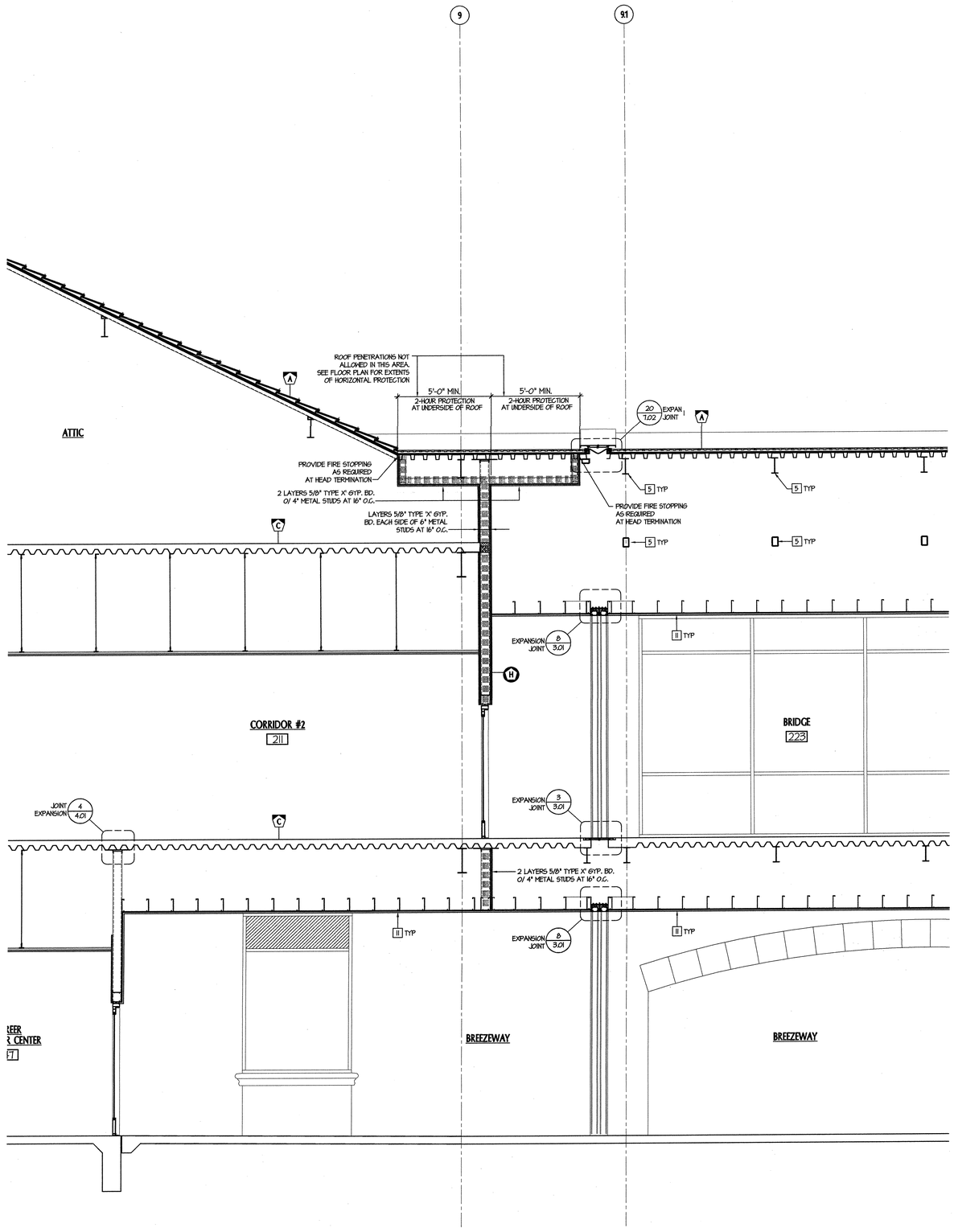

WALL SECTION
SCALE: 3/8"= 1'-0"

R

GENERAL NOTES

1. FOR TYPICAL STEEL STUD FRAMING DETAILS, SEE SHEET **4.01**

KEYNOTES

1. EXPOSED STEEL FRAMING, PAINT FINISH, SEE STRUCTURAL
2. SUSPENDED CEILING SYSTEM, SEE REFLECTED CEILING PLANS AND ROOM FINISH SCHEDULE
3. GUARDRAIL IN UNOCCUPIED ATTIC, SEE ATTIC PLANS
4. GLAZED CURTAIN WALL SYSTEM, SEE PLANS & SCHEDULES
5. STEEL FRAMING SYSTEM, SEE STRUCTURAL FRAMING PLANS
6. BOOKSTACKS, SEE FLOOR PLANS
7. LINE OF FURRED COLUMN/WALL ENCLOSURE BEYOND
8. DECK OPENING FOR MECHANICAL SYSTEM, SEE ATTIC PLAN AND MECHANICAL DWG'S
9. LIGHT FIXTURE, SEE REFLECTED CEILING AND ELECTRICAL PLANS
10. THEFT SENSOR, SEE FLOOR PLANS
11. CEMENT PLASTER SOFFIT OR CEILING, SEE REFLECTED CEILING PLANS
12. PAINTED METAL LOCKER, SEE FLOOR PLANS
13. HANDRAIL/GUARDRAIL AT STAIRWAYS (SHOWN "DASHED", FOR CLARITY AGAINST ADJACENT STRINGER CAP SYSTEM), SEE DETAILS **18 & 19B/10.01**
14. GUARDRAIL AT BREEZEWAYS , SEE DETAILS **17 & 19A/10.01**
15. SOFFIT VENT, SEE REFLECTED CEILING PLANS
16. EXPOSED DUCTWORK, SEE **MECH. DWG'S**

LEGEND

= STRUCTURAL STEEL BRACE FRAME, SEE STRUCTURAL DWG'S.

= RATED ASSEMBLY, SEE FLOOR PLAN FOR TYPE AND EXTENT

= EXTERIOR WALL ASSEMBLY, SEE DETAIL **9/3.01**

= HORIZONTAL ASSEMBLY, SEE DETAIL **18/3.01**

tBP
architecture
planning
interiors
management

tBP/Architecture
1000 Burnett Ave. Suite 140
Concord, CA 94520
ph. 925.246.6419 fx. 925.246.6495

architect

consultant

agency

owner

SAN RAMON VALLEY CENTER
CONTRA COSTA COMMUNITY COLLEGE DISTRICT
SAN RAMON, CALIFORNIA

tBP project number : 2021.00
file name: A-0619_wsec.dwg
drawn by: MM checked by:
date: 03-04-04 plot scale: 1:1

Rev: date: description:

drawing title: building no:
WALL SECTIONS

drawing no:
A6.19
drawing of

BE ABSOLUTELY CERTAIN TO PLOT AT 100.00

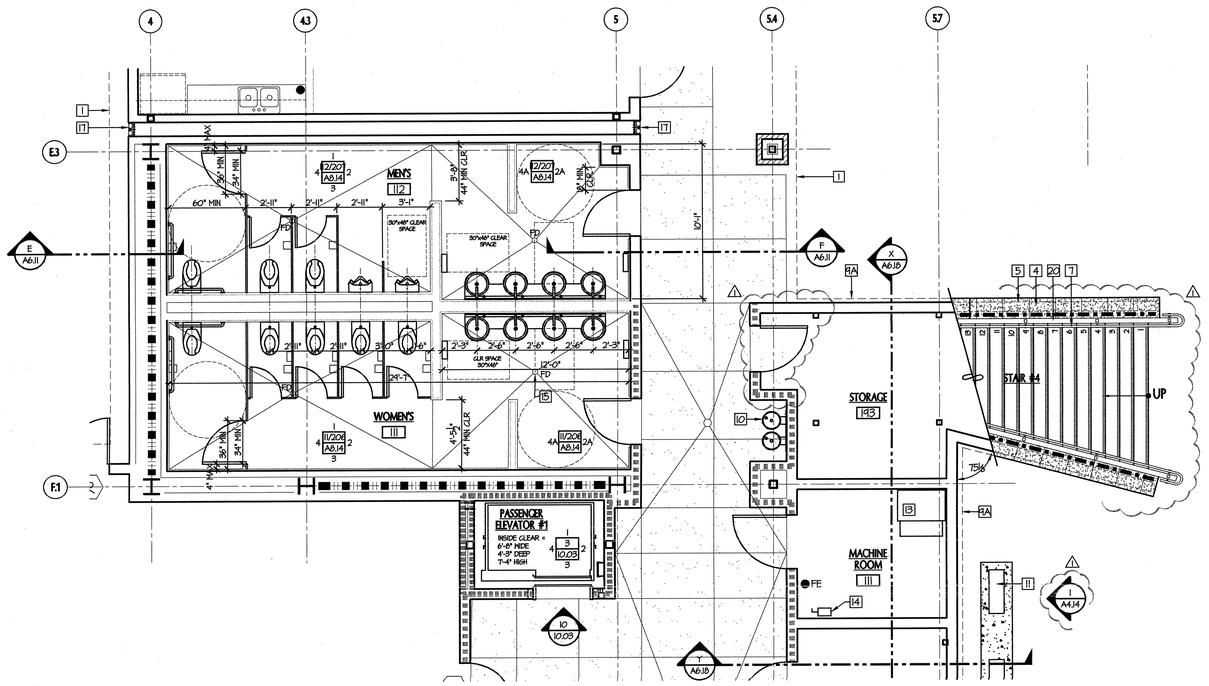

ENLARGED PLAN - FIRST FLOOR
SCALE: 1/4"= 1'-0"

1

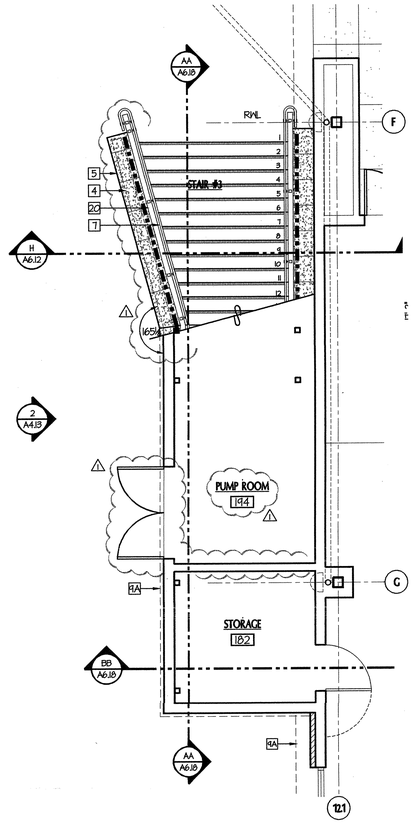

ENLARGED PLAN - FIRST FLOOR
SCALE: 1/4"= 1'-0"

2

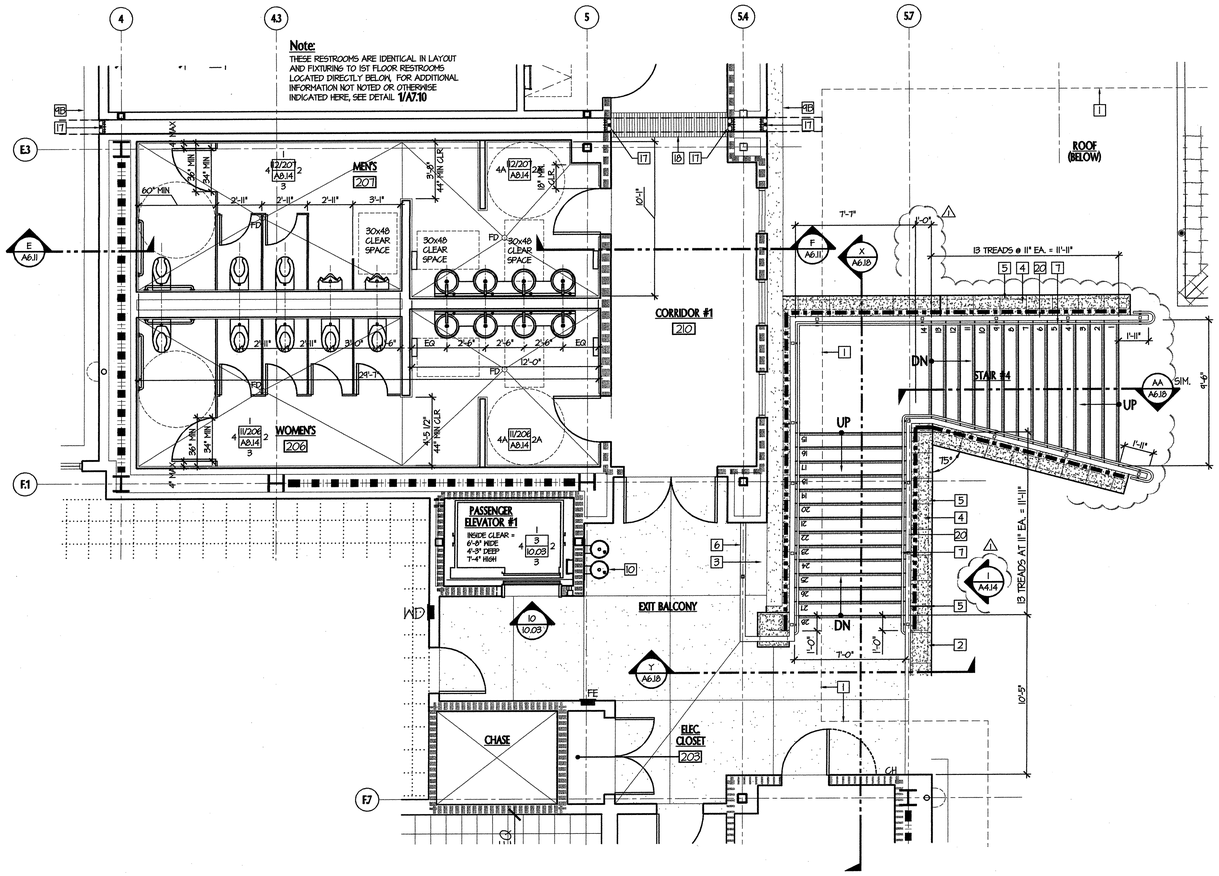

ENLARGED PLAN - SECOND FLOOR
SCALE: 1/4"= 1'-0"

3

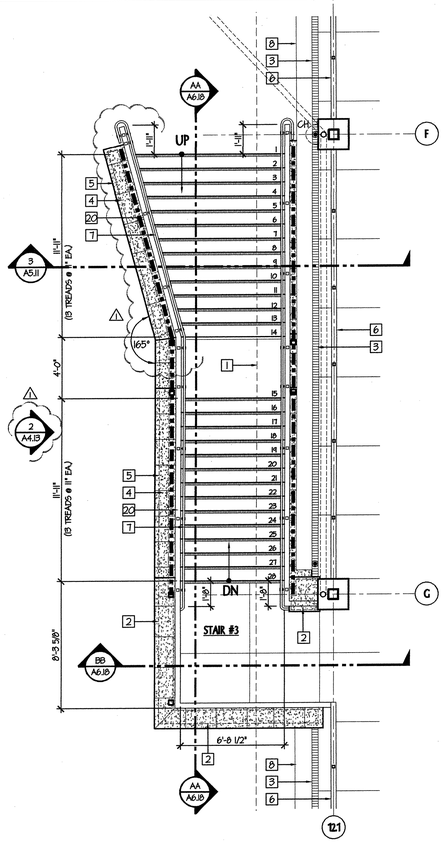

ENLARGED PLAN - SECOND FLOOR
SCALE: 1/4"= 1'-0"

4

GENERAL NOTES

1. FOR TYPICAL REQUIRED CLEARANCES OF FIXTURES & ACCESSORIES TO FINISHED SPACES, SEE SHEET **A8.14**
2. FOR WALL TYPES, SEE COMPLETE FLOOR PLANS
3. ALL LAVATORIES ARE ACCESSIBLE

STAIR NOTES

1. ALL STAIRS, STAIRWAYS, AND STEPS ARE TO BE ACCESSIBLE UNLESS NOTED OTHERWISE.
2. UPPER APPROACH AND ALL TREADS OF EXTERIOR STAIRS MUST HAVE A 2" MIN. WIDE STRIP OF CONTRASTING COLOR.
3. UPPER APPROACH AND LOWER TREAD OF INTERIOR STAIRS MUST HAVE A 2" MIN. WIDE STRIP OF CONTRASTING COLOR.
4. COLOR STRIP MUST BE SOLID 2" WIDE WITH 70% MIN. CONTRAST
5. PROVIDE HANDRAILS ON BOTH SIDES OF STAIRS. TOP OF GRIPPING SURFACE OF ALL HANDRAILS TO BE AT 36" A.F.F. U.N.O.
6. EXTEND ALL STAIR HANDRAILS 12" MIN. BEYOND THE TOP OF THE STAIR RUN AND PARALLEL TO THE LANDING SURFACE.
7. EXTEND ALL STAIR HANDRAILS 12" MIN. PLUS THE WIDTH OF ONE TREAD BEYOND THE BOTTOM RISER. THE HANDRAIL MUST CONTINUE TO SLOPE FOR A DISTANCE OF THE WIDTH OF ONE TREAD AND THE REMAINDER OF THE EXTENSION MUST BE PARALLEL TO THE LANDING SURFACE.
8. RETURN ENDS OF HANDRAIL EXTENSION TO WALL, FLOOR OR POST
9. PROVIDE 42" HIGH GUARDRAIL AT ALL OPEN EDGES OF STAIRS, PLATFORMS, AND LANDINGS PER DETAIL **18/10.01**

KEYNOTES

1. LINE OF ROOF OVERHANG ABOVE.
2. LINE OF CONCRETE CURB ON STAIR LANDING BELOW (SHOWN "DASHED")
3. FLOOR GUTTER SYSTEM, SEE DETAILS **3 & 5/ 7.02**
4. PRECAST CONCRETE WALL CAP.
5. LINE OF WALL BELOW (SHOWN "DASHED")
6. GUARDRAIL AT BREEZEWAY, SEE DETAIL **17 & 19A/10.01**
7. HANDRAIL, SEE DETAIL **19B/10.01**
8. SHEET METAL COPING OVER PRE-COATED ARCHITECTURAL FOAM SHAPE.
9A. LINE OF PRE-COATED ARCH. FOAM SHAPE ABOVE (SHOWN "DASHED")
9B. LINE OF PRE-COATED ARCH. FOAM SHAPE BELOW (SOLID LINE)
10. ACCESSIBLE DRINKING FOUNTAIN(S), SEE DETAIL **6/A7.11**
11. PAD MOUNTED CONDENSING UNIT, SEE MECH DWGS.
12. LADDER TO ATTIC HATCH, SEE DETAIL **11/9.50**
13. POWER UNIT, SEE MECHANICAL DRAWING
14. SHUT-OFF PANEL, SEE MECHANICAL DRAWING
15. SLOPE TO DRAIN AS INDICATED.
16. MECHANICAL CHASE, SEE MECHANICAL DRAWING
17. VERTICAL EXPANSION JOINT, SEE DETAIL **8/3.01**
18. HORIZONTAL EXPANSION JOINT, SEE DETAIL **3/3.01**
19. SUPPORT PANEL BELOW, SEE DETAIL **5/6.50**
20. GUARDRAIL / HANDRAIL AT STAIRWAY, SEE DETAIL **17 & 19/10.01**
21. LINE OF ARCHED OPENING ABOVE (SHOWN "DASHED").
22. SERVICE SINK, SEE **PLUMBING DWG'S.**

WALL LEGEND

- = 1-HOUR FIRE RATED SHAFT WALL
- = 1-HOUR FIRE RATED EXIT COURT WALL (PROTECTED TO UNDERSIDE OF STRUCTURE)
- = 1-HOUR FIRE RATED CORRIDOR
- = 2-HOUR FIRE RATED HORIZONTAL EXIT
- = 1-HOUR FIRE RATED WALL
- = STEEL BRACE FRAME, SEE
- = STAIR STRINGER ("BELOW")
- = MASONRY VENEER
- = MASONRY WALL CONSTRUCTION

LEGEND

- = FLOOR STEP (IN INCHES)
- FE = SURFACE MOUNTED FIRE EXTINGUISHER
- FE = RECESSED FIRE EXTINGUISHER, SEE DETAILS **11 & 17/4.03**
- MD = RECESSED DATA DISTRIBUTION PANEL, SEE **ELEC. DWG'S.**
- RWL = 4" CAST IRON RAIN WATER LEADER IN WALL CONNECT TO STORM DRAINAGE SYSTEM, SEE **CIVIL DWG'S.**
- CH = 4" CAST IRON RAIN WATER LEADER IN WALL WITH CONDUCTOR HEAD ABOVE (SHOWN DASHED)
- EP = SURFACE MOUNTED ELECTRICAL PANEL, SEE **ELEC. DWG'S.**
- EP = RECESSED ELECTRICAL PANEL, SEE **SEE 12 & 17/4.03 & ELEC. DWG'S.**
- A = METAL LOCKERS, FOR TYPE, SEE **17/9.50**
- CG = CORNER GUARD, SEE DETAIL **14/9.50**

tBP
architecture
planning
interiors
management

LICENSED ARCHITECT
JOHN M. PLA
No. C-4615
EXP. 12-31-05
STATE OF CALIFORNIA

tBP/architecture
1000 Burnett Ave, Suite 140
Concord, CA 94520
ph. 925.246.6419 fx. 925.246.6495

architect

consultant

APPROVED
ELECTRICAL STAMP
DIV. OF REGULATION SERVICES
OFFICE OF
APP. NO. 130179
BY
DATE 6-9-04

agency

SAN RAMON VALLEY CENTER

CONTRA COSTA COMMUNITY COLLEGE DISTRICT

SAN RAMON, CALIFORNIA

owner

tBP project number : 20212.00
file name: A-0710_etp.dwg
drawn by: DM checked by:
date: 03-09-04 plot scale: 1:1

Rev.	date:	description:
1	03-24-04	DESIGN CLARIFICATIONS

drawing title: ENLARGED RESTROOMS & STAIRS PLAN

building no.:

drawing no.: A7.10

drawing of

IF ABSOLUTELY DETERMINED TO ENLOY HAVE 130.00 (09.24.04)

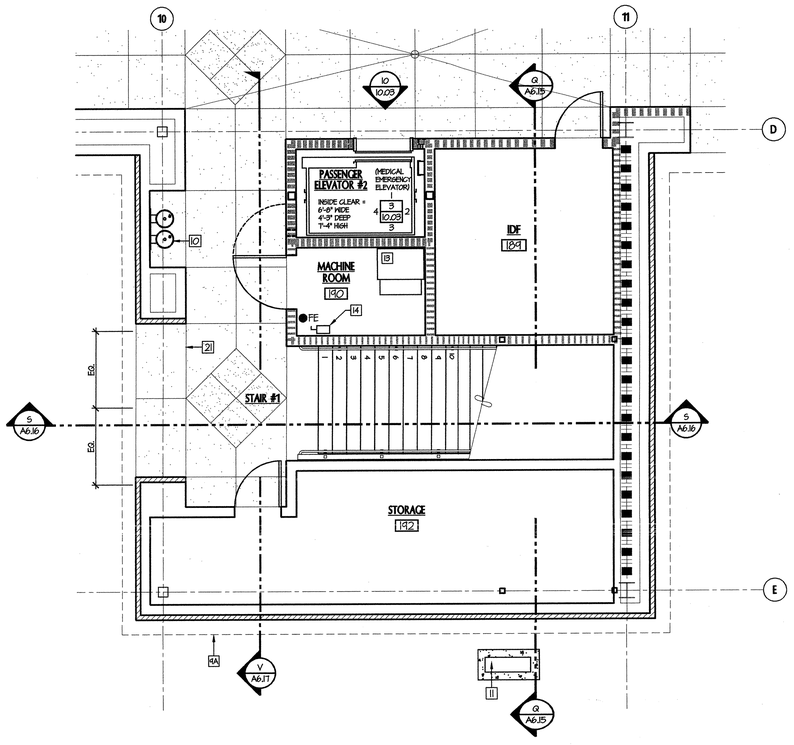

ENLARGED PLAN - FIRST FLOOR
SCALE: 1/4"= 1'-0" | 1

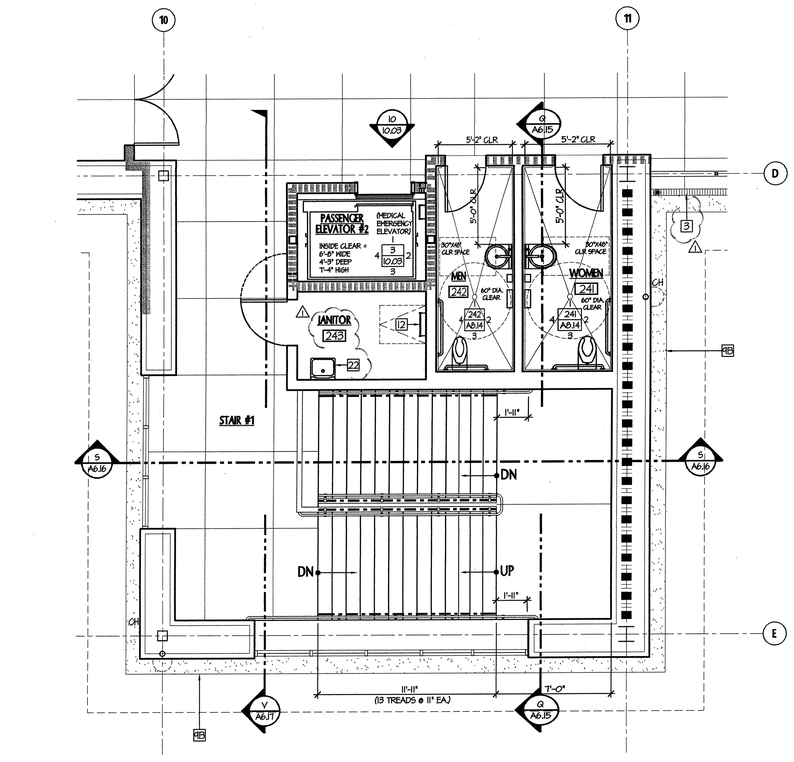

ENLARGED PLAN - SECOND FLOOR
SCALE: 1/4"= 1'-0" | 4

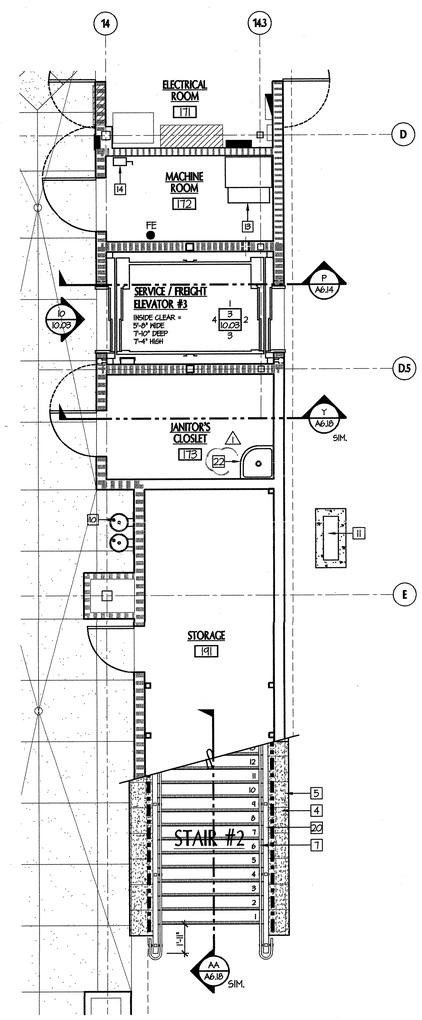

ENLARGED PLAN - FIRST FLOOR
SCALE: 1/4"= 1'-0" | 2

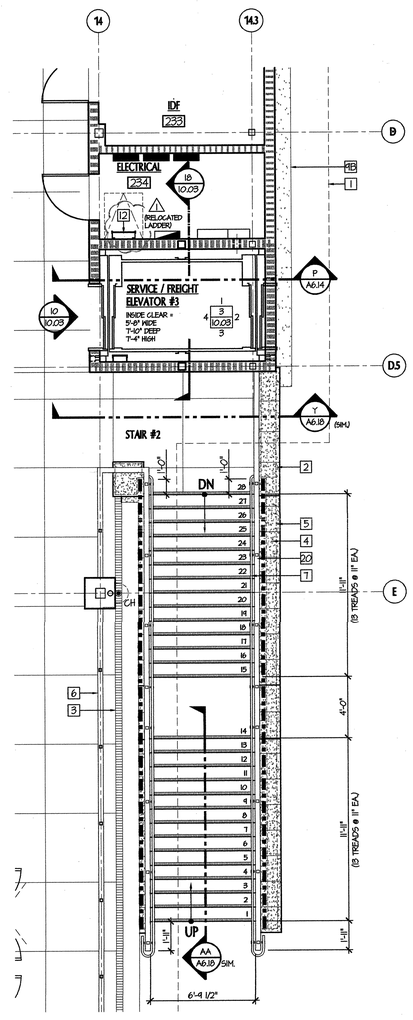

ENLARGED PLAN - SECOND FLOOR
SCALE: 1/4"= 1'-0" | 3

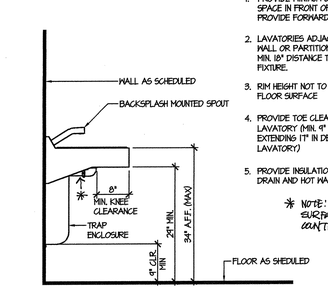

Notes:

1. PROVIDE MINIMUM 30" X 48" CLEAR SPACE IN FRONT OF LAVATORY TO PROVIDE FORWARD APPROACH.
2. LAVATORIES ADJACENT TO A SIDE WALL OR PARTITION SHALL HAVE A MIN. 18" DISTANCE TO THE CENTER OF FIXTURE.
3. RIM HEIGHT NOT TO EXCEED 34" ABOVE FLOOR SURFACE
4. PROVIDE TOE CLEARANCE UNDER LAVATORY (MIN. 9" HIGH, 30" WIDE, AND EXTENDING 11" IN DEPTH IN FRONT OF LAVATORY)
5. PROVIDE INSULATION AT ALL EXPOSED DRAIN AND HOT WATER PIPING

* NOTE: NO ROUGH OR ABRASIVE SURFACES ALLOWED BELOW COUNTERTOP.

ACCESSIBLE SINK
SCALE: 1"= 1'-0" | 5

NOTE:
ATTACH DRINKING FOUNTAIN INTO BACKING PLATE TYPE "B" PER DETAIL 17/4.02) W/ FASTENERS PER MFGR'S. RECOMMENDATIONS

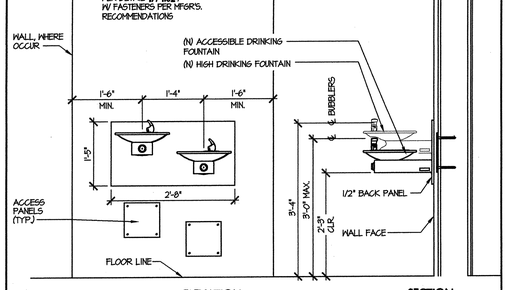

ACCESSIBLE DRINKING FOUNTAIN
SCALE: 3/4"= 1'-0" | 6

GENERAL NOTES

1. FOR TYPICAL REQUIRED CLEARANCES OF FIXTURES & ACCESSORIES TO FINISHED SPACES, SEE SHEET **A8.14**
2. FOR WALL TYPES, SEE COMPLETE FLOOR PLANS
3. ALL LAVATORIES ARE ACCESSIBLE

STAIR NOTES

1. ALL STAIRS, STAIRWAYS, AND STEPS ARE TO BE ACCESSIBLE UNLESS NOTED OTHERWISE.
2. UPPER APPROACH AND ALL TREADS OF EXTERIOR STAIRS MUST HAVE A 2" MIN. WIDE STRIP OF CONTRASTING COLOR.
3. UPPER APPROACH AND LOWER TREAD OF INTERIOR STAIRS MUST HAVE A 2" MIN. WIDE STRIP OF CONTRASTING COLOR.
4. COLOR STRIP MUST BE SOLID 2" WIDE WITH 70% MIN. CONTRAST
5. PROVIDE HANDRAILS ON BOTH SIDES OF STAIRS. TOP OF GRIPPING SURFACE OF ALL HANDRAILS TO BE AT 36" A.F.F. U.N.O.
6. EXTEND ALL STAIR HANDRAILS 12" MIN. BEYOND THE TOP OF THE STAIR RUN AND PARALLEL TO THE LANDING SURFACE.
7. EXTEND ALL STAIR HANDRAILS 12" MIN. PLUS THE WIDTH OF ONE TREAD BEYOND THE BOTTOM RISER. THE HANDRAIL MUST CONTINUE TO SLOPE FOR A DISTANCE OF THE WIDTH OF ONE TREAD AND THE REMAINDER OF THE EXTENSION MUST BE PARALLEL TO THE LANDING SURFACE.
8. RETURN ENDS OF HANDRAIL EXTENSION TO WALL, FLOOR OR POST
9. PROVIDE 42" HIGH GUARDRAIL AT ALL OPEN EDGES OF STAIRS, PLATFORMS, AND LANDINGS PER DETAIL **18/10.01**

KEYNOTES

1. LINE OF ROOF OVERHANG ABOVE.
2. LINE OF CONCRETE CURB ON STAIR LANDING BELOW (SHOWN "DASHED")
3. FLOOR GUTTER SYSTEM, SEE DETAILS **3 & 5/ 7.02**
4. PRECAST CONCRETE WALL CAP.
5. LINE OF WALL BELOW (SHOWN "DASHED")
6. GUARDRAIL AT BREEZEWAY, SEE DETAIL **17 & 19A/10.01**
7. HANDRAIL, SEE DETAIL **19B/10.01**
8. SHEET METAL COPING OVER PRE-COATED ARCHITECTURAL FOAM SHAPE.
9A. LINE OF PRE-COATED ARCH. FOAM SHAPE ABOVE (SHOWN "DASHED")
9B. LINE OF PRE-COATED ARCH. FOAM SHAPE BELOW (SOLID LINE)
10. ACCESSIBLE DRINKING FOUNTAIN(S), SEE DETAIL **6/A7.11**
11. PAD MOUNTED CONDENSING UNIT, SEE MECH DWGS.
12. LADDER TO ATTIC HATCH, SEE DETAIL **11/9.50**
13. POWER UNIT, SEE MECHANICAL DRAWING
14. SHUT-OFF PANEL, SEE MECHANICAL DRAWING
15. SLOPE TO DRAIN AS INDICATED.
16. MECHANICAL CHASE, SEE MECHANICAL DRAWING
17. VERTICAL EXPANSION JOINT, SEE DETAIL **8/3.01**
18. HORIZONTAL EXPANSION JOINT, SEE DETAIL **3/3.01**
19. SUPPORT PANEL BELOW, SEE DETAIL **5/6.50**
20. GUARDRAIL / HANDRAIL AT STAIRWAY, SEE DETAIL **17 & 19/10.01**
21. LINE OF ARCHED OPENING ABOVE (SHOWN "DASHED").
22. SERVICE SINK, SEE **PLUMBING DWG'S.**

WALL LEGEND

- = 1-HOUR FIRE RATED SHAFT WALL
- = 1-HOUR FIRE RATED EXIT COURT WALL (PROTECTED TO UNDERSIDE OF STRUCTURE)
- = 1-HOUR FIRE RATED CORRIDOR
- = 2-HOUR FIRE RATED HORIZONTAL EXIT
- = 1-HOUR FIRE RATED WALL
- = STEEL BRACE FRAME, SEE
- = STAIR STRINGER ("BELOW")
- = MASONRY VENEER
- = MASONRY WALL CONSTRUCTION

LEGEND

- = FLOOR STEP (IN INCHES)
- FE = SURFACE MOUNTED FIRE EXTINGUISHER
- FE = RECESSED FIRE EXTINGUISHER, SEE DETAILS **11 & 17/4.03**
- MD = RECESSED DATA DISTRIBUTION PANEL, SEE **ELEC. DWG'S.**
- RWL = 4" CAST IRON RAIN WATER LEADER IN WALL. CONNECT TO STORM DRAINAGE SYSTEM, SEE **CIVIL DWG'S.**
- CH = 4" CAST IRON RAIN WATER LEADER IN WALL WITH CONDUCTOR HEAD ABOVE (SHOWN DASHED)
- EP = SURFACE MOUNTED ELECTRICAL PANEL, SEE **ELEC. DWG'S.**
- EP = RECESSED ELECTRICAL PANEL, SEE **12 & 17/4.03 & ELEC. DWG'S.**
- A A = METAL LOCKERS, FOR TYPE, SEE **17/9.50**
- CG = CORNER GUARD, SEE DETAIL **14/9.50**

tBP
architecture
planning
interiors
management

LICENSED ARCHITECT RAMIN KAMALI No. C-6180 REGISTERED PROFESSIONAL ENGINEER STATE OF CALIFORNIA 12-31-05

tBP/Architecture
1000 Burnett Ave, Suite 140
Concord, CA 94520
ph: 925.246.6419 fx: 925.246.6495

architect

consultant

APPROVED
FOR THE STATE ARCHITECT
OFFICE OF REGULATION SERVICES
APPL NO. 105719
BY: [illegible]
DATE: 6-9-04

agency

SAN RAMON VALLEY CENTER
CONTRA COSTA COMMUNITY COLLEGE DISTRICT
SAN RAMON, CALIFORNIA

owner

tBP project number : 2021.00
file name: A-0711_etp.dwg
drawn by: DM checked by:
date: 03-04-04 plot scale: 1:1

Rev:	date:	description:
1	03-24-04	DESIGN CLARIFICATIONS

drawing title: ENLARGED RESTROOMS & STAIRS PLANS
building no:
drawing no: A7.11
drawing of

© ARCHITECTURAL DESIGNED BY tBP/ARCHITECTURE (925) 246-6419

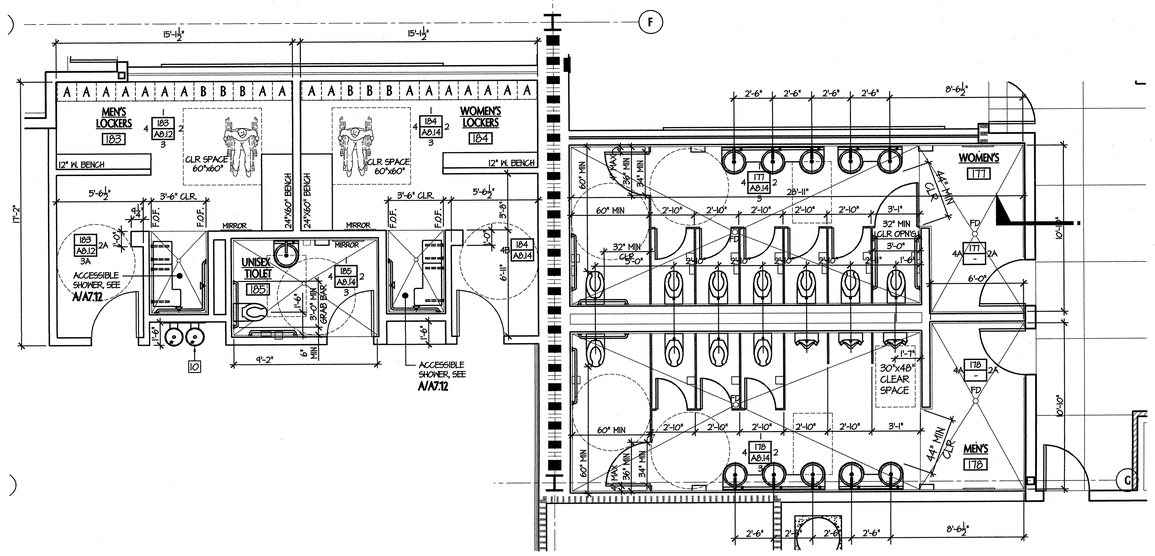

ENLARGED PLAN - FIRST FLOOR

SCALE: 1/4"= 1'-0"

3

ENLARGED PLAN - FIRST FLOOR

SCALE: 1/4"= 1'-0"

2

ACCESSIBLE SHOWER STALL

SCALE: 1/2"= 1'-0"

A

OPEN AREA

SCALE: 1/4"= 1'-0"

1

GENERAL NOTES

1. FOR TYPICAL REQUIRED CLEARANCES OF FIXTURES & ACCESSORIES TO FINISHED SPACES, SEE SHEET **A8.14**
2. FOR WALL TYPES, SEE COMPLETE FLOOR PLANS
3. ALL LAVATORIES ARE ACCESSIBLE

STAIR NOTES

1. ALL STAIRS, STAIRWAYS, AND STEPS ARE TO BE ACCESSIBLE UNLESS NOTED OTHERWISE.
2. UPPER APPROACH AND ALL TREADS OF EXTERIOR STAIRS MUST HAVE A 2" MIN. WIDE STRIP OF CONTRASTING COLOR.
3. UPPER APPROACH AND LOWER TREAD OF INTERIOR STAIRS MUST HAVE A 2" MIN. WIDE STRIP OF CONTRASTING COLOR.
4. COLOR STRIP MUST BE SOLID 2" WIDE WITH 70% MIN. CONTRAST
5. PROVIDE HANDRAILS ON BOTH SIDES OF STAIRS. TOP OF GRIPPING SURFACE OF ALL HANDRAILS TO BE AT 36" A.F.F. U.N.O.
6. EXTEND ALL STAIR HANDRAILS 12" MIN. BEYOND THE TOP OF THE STAIR RUN AND PARALLEL TO THE LANDING SURFACE.
7. EXTEND ALL STAIR HANDRAILS 12" MIN. PLUS THE WIDTH OF ONE TREAD BEYOND THE BOTTOM RISER. THE HANDRAIL MUST CONTINUE TO SLOPE FOR A DISTANCE OF THE WIDTH OF ONE TREAD AND THE REMAINDER OF THE EXTENSION MUST BE PARALLEL TO THE LANDING SURFACE.
8. RETURN ENDS OF HANDRAIL EXTENSION TO WALL, FLOOR OR POST
9. PROVIDE 42" HIGH GUARDRAIL AT ALL OPEN EDGES OF STAIRS, PLATFORMS, AND LANDINGS PER DETAIL **18/10.01**

KEYNOTES

1. LINE OF ROOF OVERHANG ABOVE.
2. LINE OF CONCRETE CURB ON STAIR LANDING BELOW (SHOWN "DASHED")
3. FLOOR GUTTER SYSTEM, SEE DETAILS **3 & 5/ 7.02**
4. PRECAST CONCRETE WALL CAP.
5. LINE OF WALL BELOW (SHOWN "DASHED")
6. GUARDRAIL AT BREEZEWAY, SEE DETAIL **17 & 19A/10.01**
7. HANDRAIL, SEE DETAIL **19B/10.01**
8. SHEET METAL COPING OVER PRE-COATED ARCHITECTURAL FOAM SHAPE.
9A. LINE OF PRE-COATED ARCH. FOAM SHAPE ABOVE (SHOWN "DASHED")
9B. LINE OF PRE-COATED ARCH. FOAM SHAPE BELOW (SOLID LINE)
10. ACCESSIBLE DRINKING FOUNTAIN(S), SEE DETAIL **6/A7.11**
11. PAD MOUNTED CONDENSING UNIT, SEE MECH DWGS.
12. LADDER TO ATTIC HATCH, SEE DETAIL **11/9.50**
13. POWER UNIT, SEE MECHANICAL DRAWING
14. SHUT-OFF PANEL, SEE MECHANICAL DRAWING
15. SLOPE TO DRAIN AS INDICATED.
16. MECHANICAL CHASE, SEE MECHANICAL DRAWING
17. VERTICAL EXPANSION JOINT, SEE DETAIL **8/3.01**
18. HORIZONTAL EXPANSION JOINT, SEE DETAIL **3/3.01**
19. SUPPORT PANEL BELOW, SEE DETAIL **5/6.50**
20. GUARDRAIL / HANDRAIL AT STAIRWAY, SEE DETAIL **17 & 19/10.01**
21. LINE OF ARCHED OPENING ABOVE (SHOWN "DASHED").

WALL LEGEND

- = 1-HOUR FIRE RATED SHAFT WALL
- = 1-HOUR FIRE RATED EXIT COURT WALL (PROTECTED TO UNDERSIDE OF STRUCTURE)
- = 1-HOUR FIRE RATED CORRIDOR
- = 2-HOUR FIRE RATED HORIZONTAL EXIT
- = 1-HOUR FIRE RATED WALL
- = STEEL BRACE FRAME, SEE
- = STAIR STRINGER ("BELOW")
- = MASONRY VENEER
- = MASONRY WALL CONSTRUCTION

LEGEND

- = FLOOR STEP (IN INCHES)
- FE = SURFACE MOUNTED FIRE EXTINGUISHER
- FE = RECESSED FIRE EXTINGUISHER, SEE DETAILS **11 & 17/4.03**
- MD = RECESSED DATA DISTRIBUTION PANEL, SEE **ELEC. DWG'S.**
- RWL = 4" CAST IRON RAIN WATER LEADER IN WALL CONNECT TO STORM DRAINAGE SYSTEM, SEE **CIVIL DWG'S.**
- GH = 4" CAST IRON RAIN WATER LEADER IN WALL WITH CONDUCTOR HEAD ABOVE (SHOWN DASHED)
- EP = SURFACE MOUNTED ELECTRICAL PANEL, SEE **ELEC. DWG'S.**
- EP = RECESSED ELECTRICAL PANEL, SEE SEE **12 & 17/4.03 & ELEC. DWG'S.**
- A / A = METAL LOCKERS, FOR TYPE, SEE **17/9.50**
- CG = CORNER GUARD, SEE DETAIL **14/9.50**

tBP
architecture
planning
interiors
management

tBP/Architecture
1000 Burnett Ave, Suite 140
Concord, CA 94520
ph. 9252466419 fx. 9252466495

architect

consultant

IDENTIFICATION STAMP DIV. OF THE STATE ARCHITECT OFFICE OF REGULATION SERVICES
APPL. NO. 109779
DATE

agency

SAN RAMON VALLEY CENTER

CONTRA COSTA COMMUNITY COLLEGE DISTRICT

SAN RAMON, CALIFORNIA

owner

tBP project number : 20212.00
file name: A-0712_etp.dwg
drawn by: DM checked by:
date: 03-09-04 plot scale: 1:1

Rev:	date:	description:

drawing title: ENLARGED RESTROOMS AND DETAILS

building no:

drawing no: A7.12

drawing of

DO NOT SCALE DRAWINGS. DRAWINGS TO BE USED ONLY FOR THE PROJECT AND SITE SPECIFIED HEREIN.

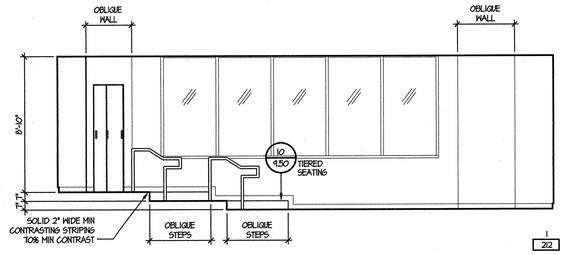

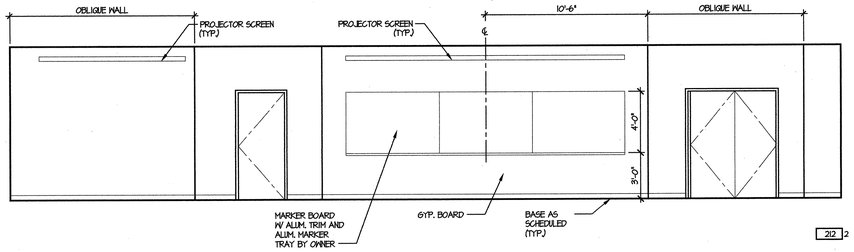

KEY NOTES

1. CEMENT PLASTER FINISH
2. METAL LOCKERS, SEE FLOOR PLAN FOR SIZE AND TYPE.
3. CONTROL JOINT (C.J.), SEE DETAIL
4. PROVIDE DISABLED ACCESSIBLE LOCKERS (DA) WHERE INDICATED. ACCESSIBLE LOCKERS SHALL BE THE LOWER OPENING OF A DOUBLE TIER UNIT WITH MANUF. ACCESSIBLE HANDLE AND EXTRA SHELF #4 FROM THE FLOOR.

CLASSROOM 212
SCALE: 1/4" = 1'-0"

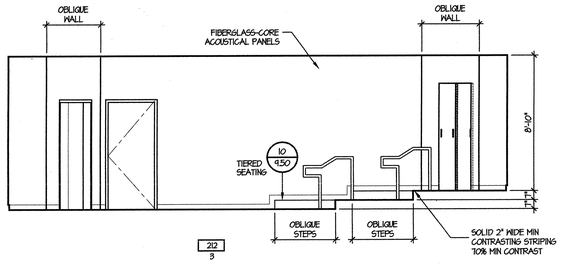

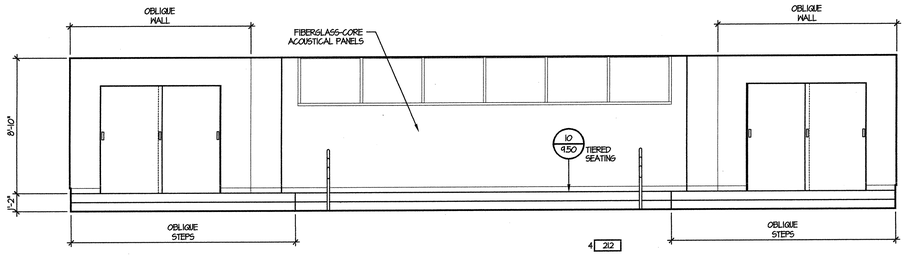

CLASSROOM 212
SCALE: 1/4" = 1'-0"

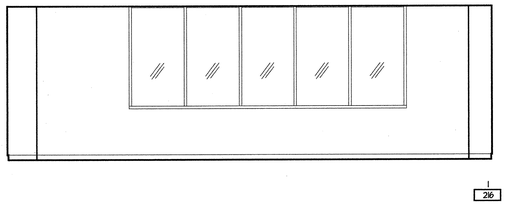

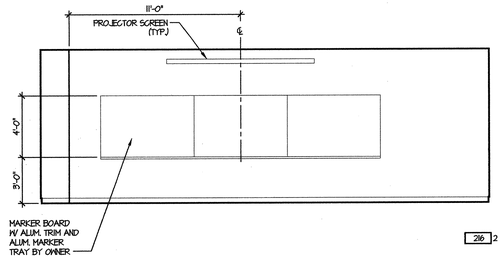

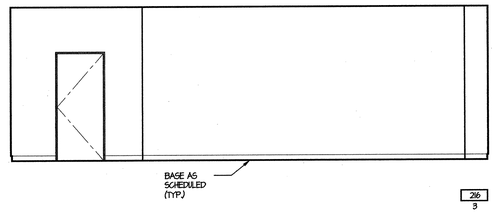

CLASSROOM 216
SCALE: 1/4" = 1'-0"

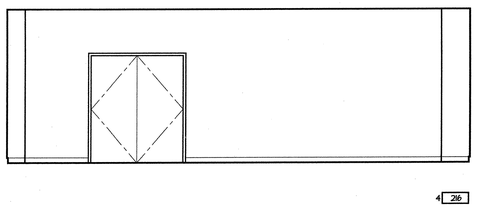

CLASSROOM 216
SCALE: 1/4" = 1'-0"

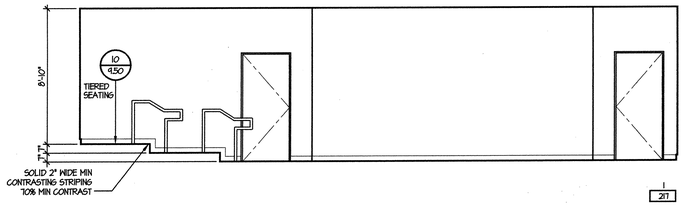

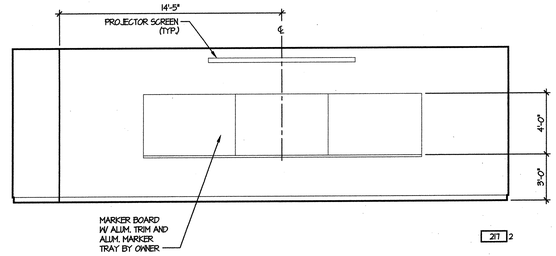

CLASSROOM 217
SCALE: 1/4" = 1'-0"

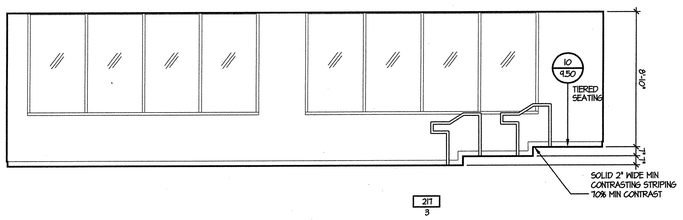

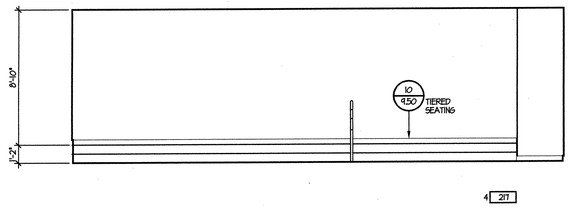

CLASSROOM 217
SCALE: 1/4" = 1'-0"

tBP
architecture
planning
interiors
management

tBP/Architecture
1000 Burnett Ave, Suite 140
Concord, CA 94520
ph: 925.246.6419 fx: 925.246.6495

architect

consultant

agency

SAN RAMON VALLEY CENTER

CONTRA COSTA COMMUNITY COLLEGE DISTRICT

SAN RAMON, CALIFORNIA

owner

tBP project number : 20212.00

file name: A-0810_Intel.dwg

drawn by: KH checked by:

date: 03-09-04 plot scale: 1:1

Rev:	date:	description:

drawing title: building no.:

INTERIOR ELEVATIONS

drawing no.:

A8.10

drawing of

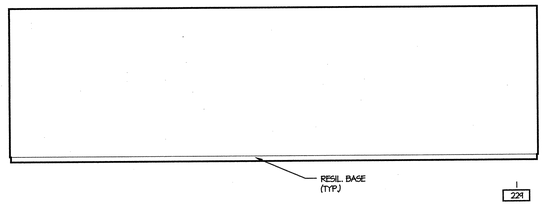

1 / 229

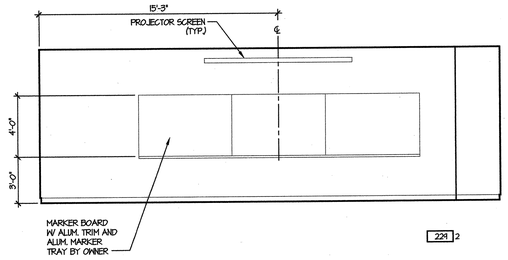

2 / 229

MULTIMEDIA
SCALE: 1/4" = 1'-0"

229

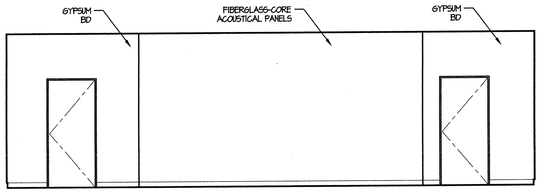

3 / 229

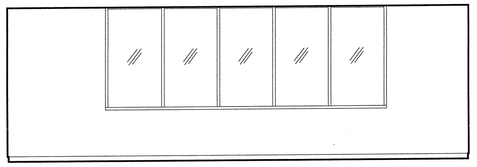

4 / 229

MULTIMEDIA
SCALE: 1/4" = 1'-0"

229

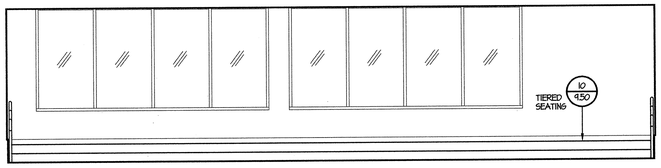

1 / 230

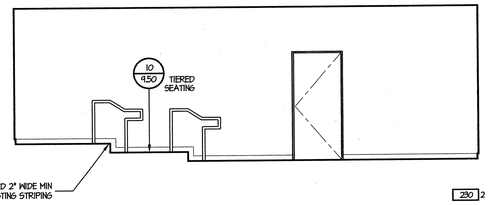

2 / 230

DISTANCE LEARNING
SCALE: 1/4" = 1'-0"

230

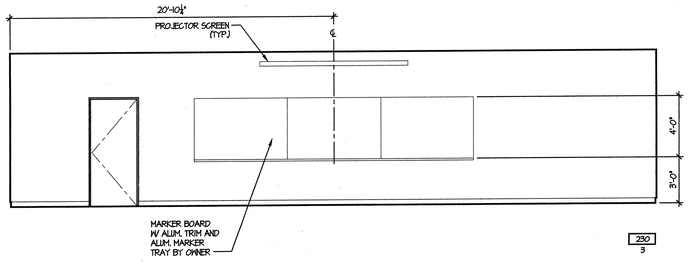

3 / 230

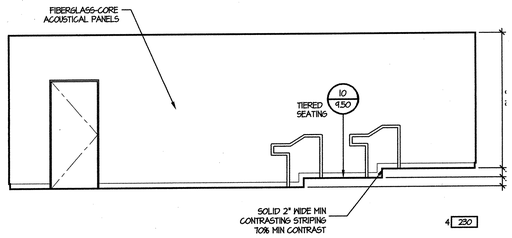

4 / 230

DISTANCE LEARNING
SCALE: 1/4" = 1'-0"

230

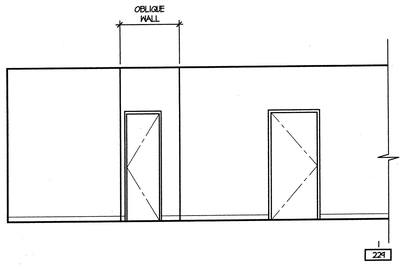

1 / 229

LOBBY
SCALE: 1/4" = 1'-0"

129

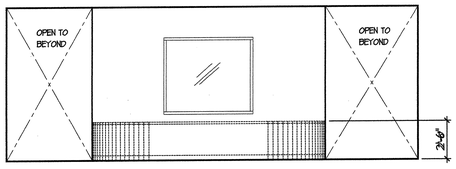

2 / 124

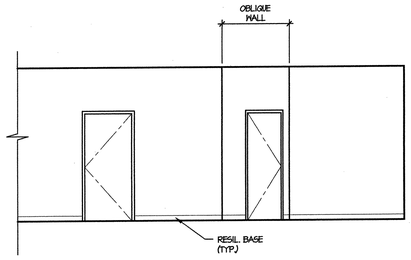

3 / 124

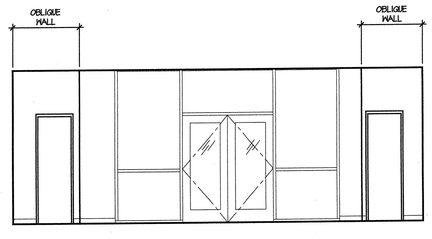

4 / 124

LOBBY
SCALE: 1/4" = 1'-0"

129

IF ABOVE ENTIRELY DETERMINED TO ENJOY ANY TOP

tBP
architecture
planning
interiors
management

tBP/Architecture
1000 Burnett Ave, Suite 140
Concord, CA 94520
ph: 925.246.6419 fx: 925.246.6495

architect

consultant

IDENTIFICATION STAMP
STATE OF CALIFORNIA
OFFICE OF REGULATION SERVICES
APPL NO. 4-087119
DATE

agency

SAN RAMON VALLEY CENTER

CONTRA COSTA COMMUNITY COLLEGE DISTRICT

SAN RAMON, CALIFORNIA

owner

tBP project number : 20212.00

file name: A-0811_Intel.dwg

drawn by: KH checked by:

date: 03-09-04 plot scale: 1:1

Rev:	date:	description:

drawing title: INTERIOR ELEVATIONS

building no.:

drawing no.: A8.11

drawing of

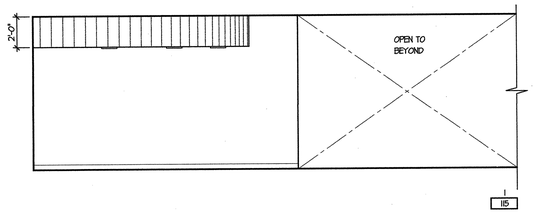

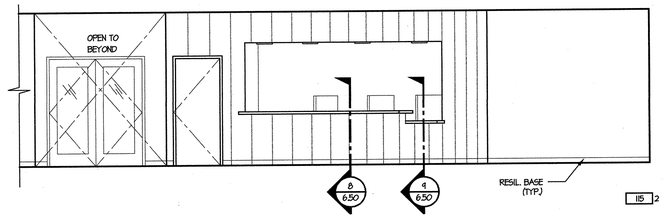

ADMISSIONS/REGISTRATION
SCALE: 1/4" = 1'-0"
115

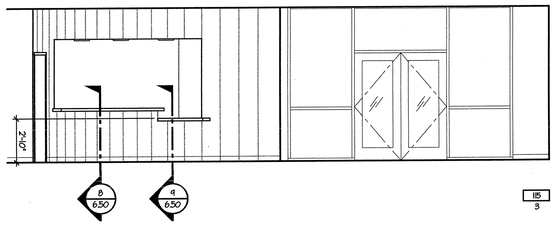

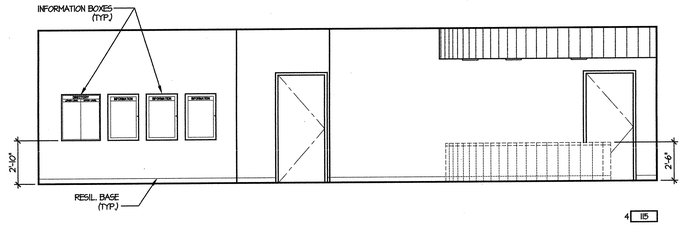

ADMISSIONS/REGISTRATION
SCALE: 1/4" = 1'-0"
115

LOCKER COUNT - ROOM 183:

TOTAL LOCKERS PROVIDED:	24
ACCESSIBLE LOCKERS PROVIDED:	3
PERCENTAGE OF ACCESSIBLE LOCKERS:	12.5%

LOCKER COUNT - ROOM 184:

TOTAL LOCKERS PROVIDED:	24
ACCESSIBLE LOCKERS PROVIDED:	3
PERCENTAGE OF ACCESSIBLE LOCKERS:	12.5%

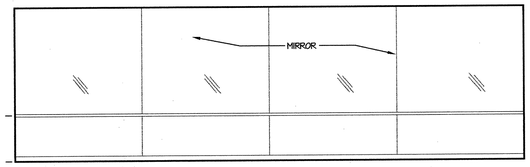

PHYSICAL EDUCATION
SCALE: 1/4" = 1'-0"
181

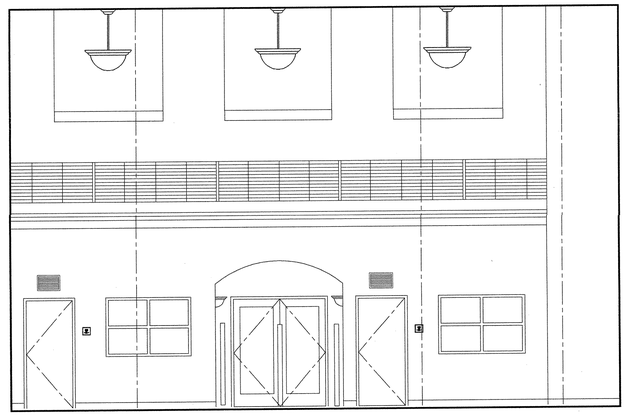

LIBRARY
SCALE: 1/4" = 1'-0"
101

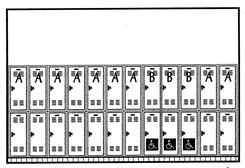

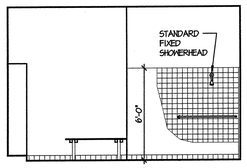

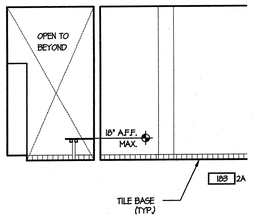

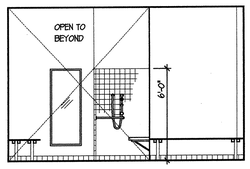

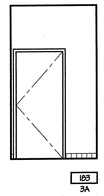

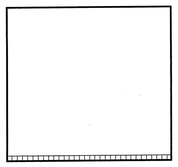

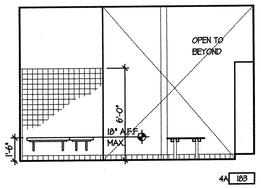

MEN'S LOCKER-ROOM
SCALE: 1/4" = 1'-0"
183

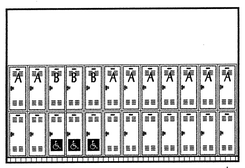

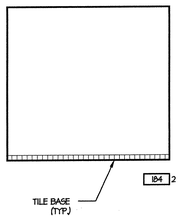

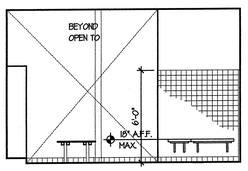

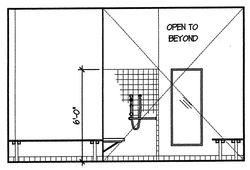

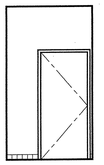

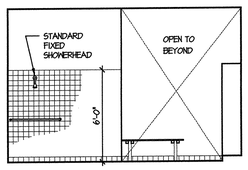

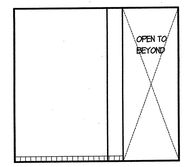

WOMEN'S LOCKER-ROOM
SCALE: 1/4" = 1'-0"
184

USE ABSOLUTELY DETERMINED TO ENJOY NEXT YOU DO (23.2.404)

tBP
architecture
planning
interiors
management

LICENSED ARCHITECTS RENEWAL 08/31/2005 LIC. C-28810 STATE OF CALIFORNIA

tBP/Architecture
1000 Burnett Ave, Suite 140
Concord, CA 94520
ph: 925.246.6419 fx: 925.246.6495

architect

consultant

CERTIFICATION STAMP
DIV. OF THE STATE ARCHITECT
OFFICE OF REGULATION SERVICES
APPL. NO. 108719
FILE NO.
DATE

agency

SAN RAMON VALLEY CENTER

CONTRA COSTA COMMUNITY COLLEGE DISTRICT

SAN RAMON, CALIFORNIA

owner

tBP project number : 20212.00
file name: A-0812_Intel.dwg
drawn by: KH checked by:
date: 08-04-04 plot scale: 1:1

Rev:	date:	description:

drawing title: INTERIOR ELEVATIONS
building no:

drawing no: A8.12
drawing of

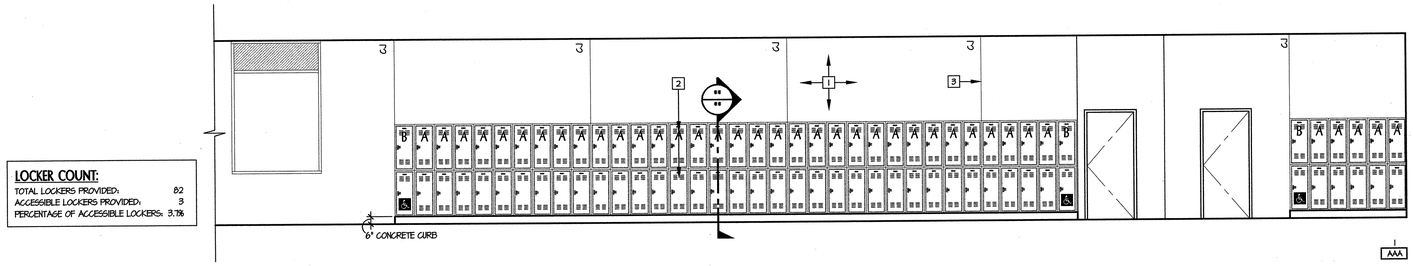

LOCKER COUNT:
TOTAL LOCKERS PROVIDED: 82
ACCESSIBLE LOCKERS PROVIDED: 3
PERCENTAGE OF ACCESSIBLE LOCKERS: 3.7%

FIRST FLOOR BREEZEWAY
SCALE: 1/4" = 1'-0"
AAA

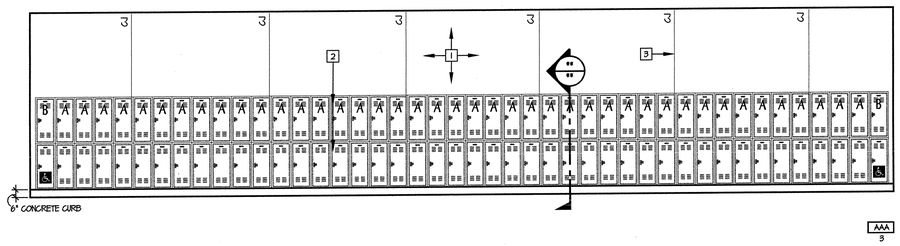

LOCKER COUNT:
TOTAL LOCKERS PROVIDED: 88
ACCESSIBLE LOCKERS PROVIDED: 2
PERCENTAGE OF ACCESSIBLE LOCKERS: 2.3%

FIRST FLOOR BREEZEWAY
SCALE: 1/4" = 1'-0"
AAA

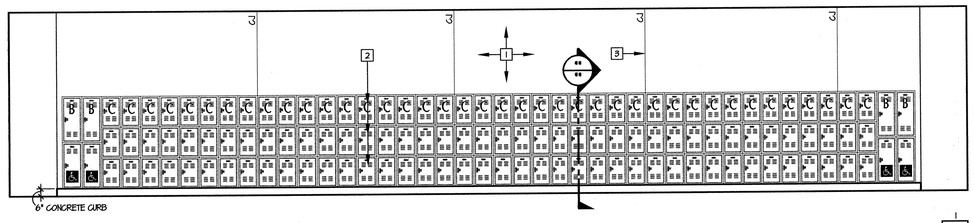

LOCKER COUNT:
TOTAL LOCKERS PROVIDED: 128
ACCESSIBLE LOCKERS PROVIDED: 4
PERCENTAGE OF ACCESSIBLE LOCKERS: 3.1%

SECOND FLOOR BREEZEWAY
SCALE: 1/4" = 1'-0"
BBB

KEY NOTES

1. CEMENT PLASTER FINISH
2. METAL LOCKERS, SEE FLOOR PLAN FOR SIZE AND TYPE.
3. CONTROL JOINT (CJ), SEE DETAIL
4. PROVIDE DISABLED ACCESSIBLE LOCKERS (DA) WHERE INDICATED. ACCESSIBLE LOCKERS SHALL BE THE LOWER OPENING OF A DOUBLE TIER UNIT WITH MANUF. ACCESSIBLE HANDLE AND EXTRA SHELF #4 FROM THE FLOOR.

tBP
architecture
planning
interiors
management

tBP/Architecture
1000 Burnett Ave, Suite 140
Concord, CA 94520
ph: 925.246.6419 fx: 925.246.6495

architect

consultant

agency

SAN RAMON VALLEY CENTER

CONTRA COSTA COMMUNITY COLLEGE DISTRICT

SAN RAMON, CALIFORNIA

owner

tBP project number : 20212.00
file name: A-0813_Intel.dwg
drawn by: DM checked by:
date: 03-09-04 plot scale: 1:1

Rev:	date:	description:

drawing title: building no.:
INTERIOR ELEVATIONS

drawing no.:
A8.13
drawing of

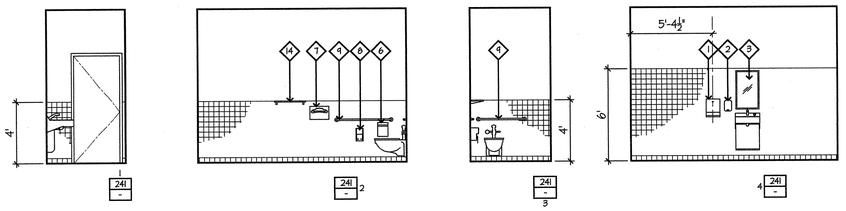

WOMEN'S TOILET
SCALE: 1/4" = 1'-0"
241

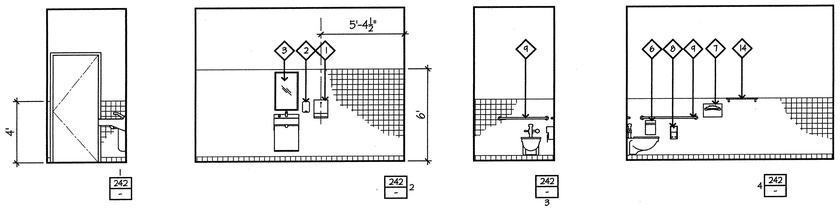

MEN'S TOILET
SCALE: 1/4" = 1'-0"
242

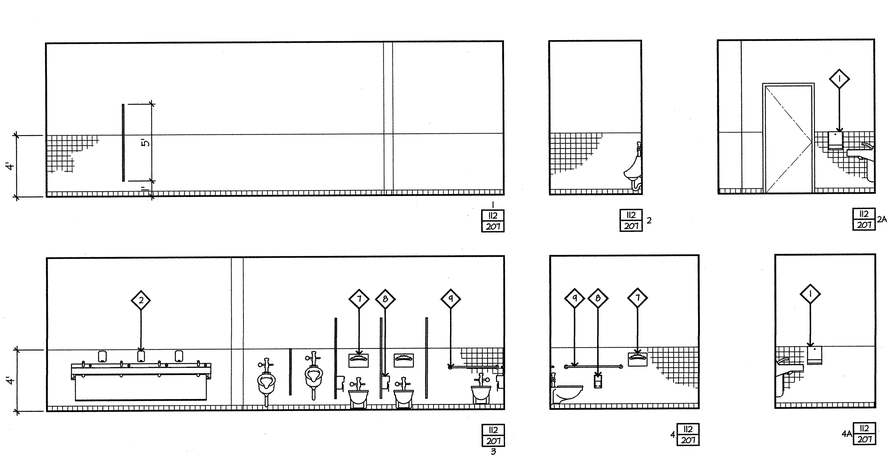

MEN'S TOILET
SCALE: 1/4" = 1'-0"
112/ 207

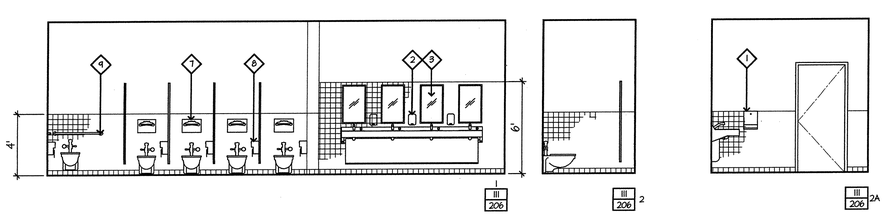

WOMEN'S TOILET
SCALE: 1/4" = 1'-0"
111/ 206

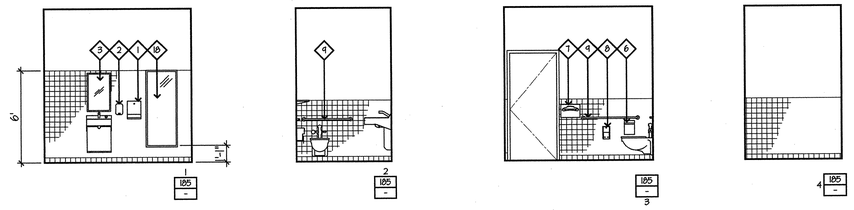

UNISEX TOILET
SCALE: 1/4" = 1'-0"
185

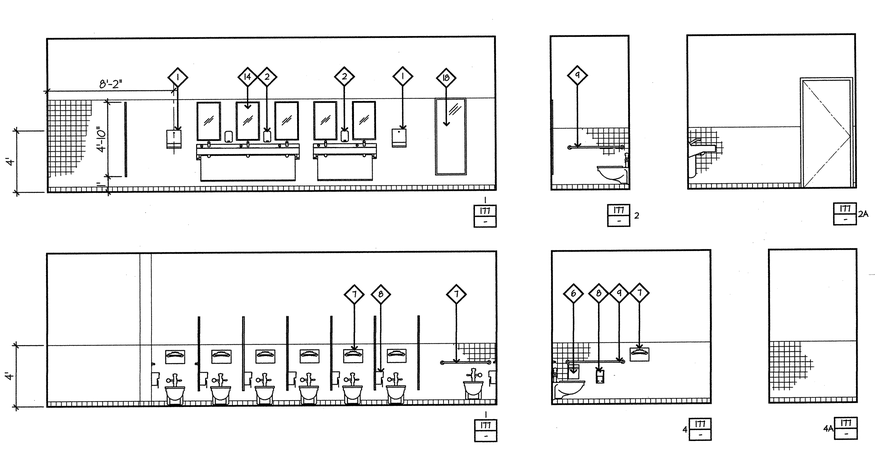

WOMEN'S TOILET
SCALE: 1/4" = 1'-0"
177

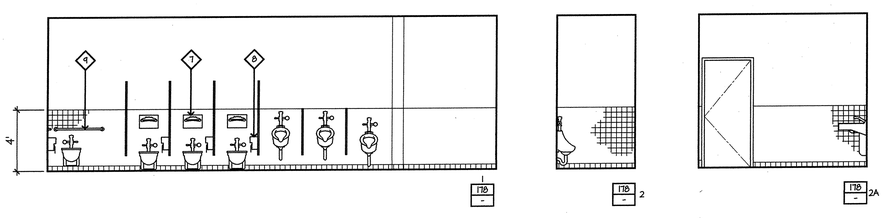

MEN'S TOILET
SCALE: 1/4" = 1'-0"
178

TOILET ACCESSORY KEYNOTES

1. PAPER TOWEL DISPENSER, SURFACE MOUNTED
2. SOAP DISPENSER, VERTICAL TANK
3. STAINLESS STEEL FRAMED MIRROR
4. -
5. -
6. SANITARY NAPKIN DISPOSAL, SURFACE MOUNTED (39" MAX. PROJECTION AT ACCESSIBLE STALLS)
7. SEAT COVER DISPENSER, SURFACE MOUNTED
8. TOILET TISSUE DISPENSER, SURFACE MOUNTED, MULTI ROLL (9" MAX. PROJECTION AT ACCESSIBLE STALLS)
9. GRAB BAR
10. -
11. SHOWER CURTAIN ROD, HEAVY DUTY
12. SHOWER CURTAIN AND HOOKS
13. SHOWER SEAT, FOLDING, SLATTED PHENOLIC SEAT, REVERSIBLE
14. -
15. UTILITY SHELF WITH MOP AND BROOM HOLDER
16. -
17. -
18. FULL HEIGHT STAINLESS STEEL FRAMED MIRROR

TOILET ACCESSORY MOUNTING HEIGHTS

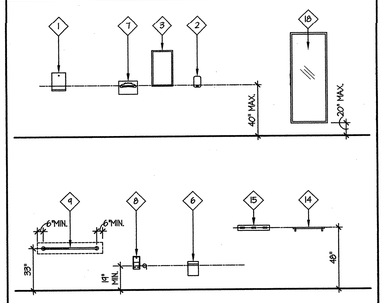

NOTES:

1. MOUNTING HEIGHTS SHOWN ARE TYPICAL, UNLESS OTHERWISE NOTED.
2. ALL ACCESSORIES SHALL BE DISABLED ACCESSIBLE WITH A MAXIMUM REACH HEIGHT OF 40" ABOVE FINISH FLOOR.
3. SEE ENLARGED TOILET PLAN AND INTERIOR ELEVATION DRAWINGS FOR TOILET ACCESSORY LOCATIONS
4. PROVIDE BACKING PLATES FOR ALL WALL MOUNTED ACCESSORIES AND FIXTURES PER DETAILS 16, 17, AND 18/A4.02
5. FOR ADDITIONAL LAVATORY INFORMATION SEE DETAIL 5/A7.11

TOILET FIXTURE MOUNTING HEIGHTS

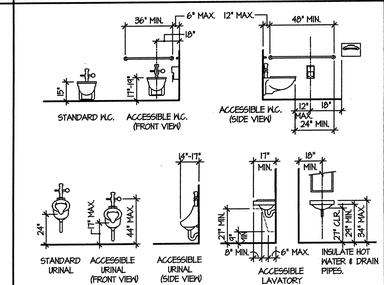

CLEARANCES OF FIXTURES & ACCESSORIES TO FINISHED SURFACE

TOILET CENTERLINE FROM WALL	18"
TOILET SEAT HEIGHT (AT SEAT LID)	17"-19"
GRAB BAR HEIGHT (SIDE)	33"
TOILET PAPER IN FRONT OF TOILET	12" MAX.
NAPKIN DISPOSAL IN FRONT OF TOILET	12" MAX.
DISPENSER OR MIRROR HEIGHT	40" MAX.
LAVATORY/SINK TOP HEIGHT	34" MAX.
LAVATORY/SINK KNEE CLEARANCE	27" MIN.
URINAL LIP HEIGHT	17" MAX.
URINAL FLUSH HANDLE HEIGHT	44" MAX.
DRINKING FOUNTAIN BUBBLER HEIGHT	36" MAX.
DRINKING FOUNTAIN KNEE CLEARANCE	27" MIN.
RAMP/STAIR HANDRAIL HEIGHT	34"-38"

BE ABSOLUTELY CERTAIN TO ENJOY MAY 1ST!!

tBP
architecture
planning
interiors
management

LICENSED ARCHITECT
Gregory Thomas Binning
No. C-31485
STATE OF CALIFORNIA

tBP/Architecture
1000 Burnett Ave, Suite 140
Concord, CA 94520
ph: 925.246.6419 fx: 925.246.6495

architect

consultant

DIV. OF STATE ARCHITECT
ACCESS COMPLIANCE
OFFICE OF REGULATION SERVICES
APPL. NO. 03-3719
BY: [illegible]
DATE: 5/5/04

agency

SAN RAMON VALLEY CENTER

CONTRA COSTA COMMUNITY COLLEGE DISTRICT

SAN RAMON, CALIFORNIA

owner

tBP project number : 20212.00

file name: A-0814_etp.dwg

drawn by: DM checked by:

date: 08-01-04 plot scale: 1:1

Rev.	date:	description:

drawing title: ENLARGED RESTROOM INTERIOR ELEVATIONS

building no.:

drawing no.: A8.14

drawing of

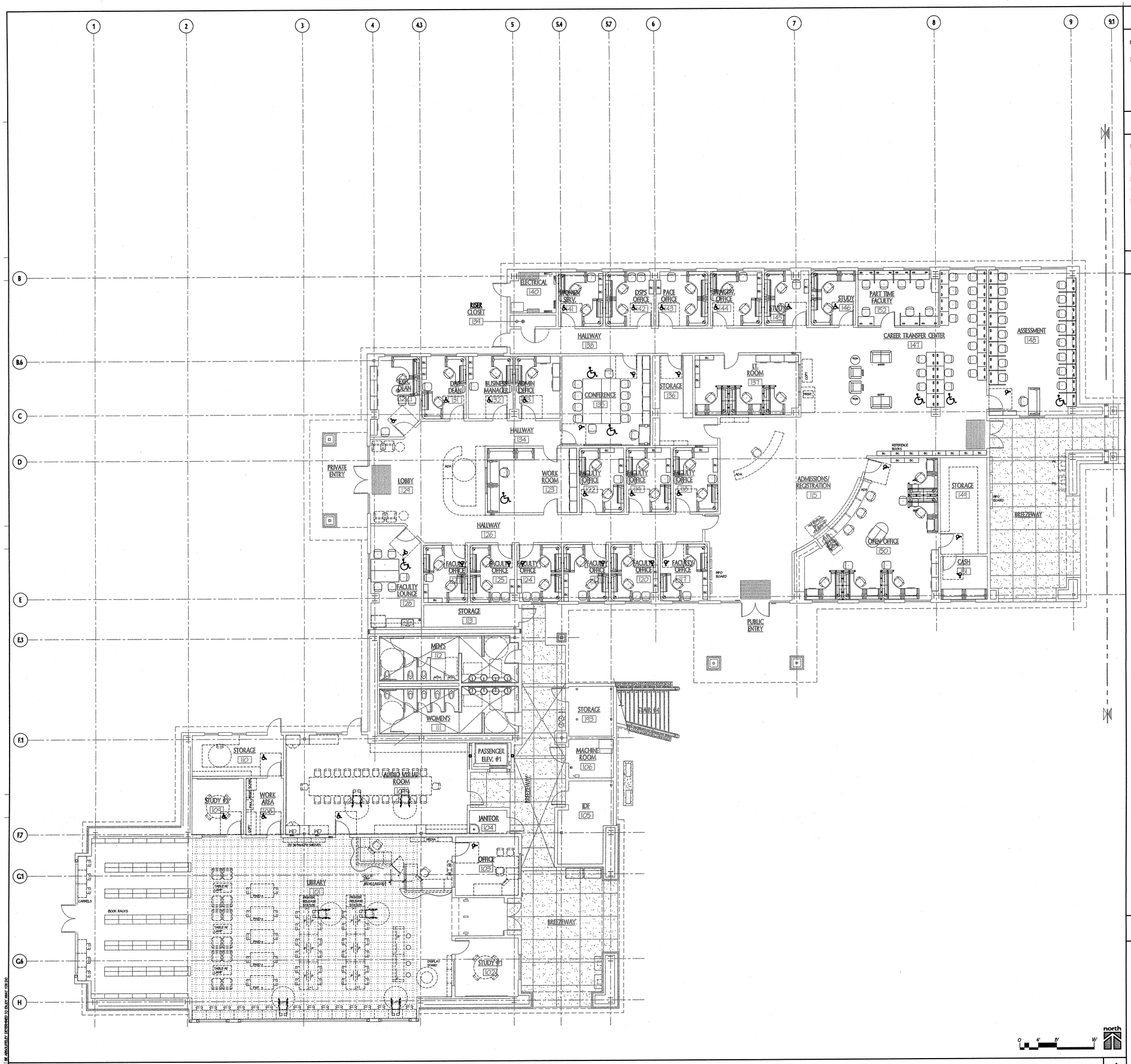

FIRST FLOOR PLAN - WEST
SCALE: 1/8" = 1'-0"

1

GENERAL NOTES

1. UNLESS NOTED OTHERWISE, ALL FURNITURE AND EQUIPMENT SHOWN ON THIS PLAN IS TO BE PROVIDED AND INSTALLED BY THE OWNER.
2. FURNITURE AND EQUIPMENT LOCATIONS INDICATED ARE SUBJECT TO CHANGE AND ARE PROVIDED FOR COORDINATION CONVENIENCE BETWEEN THE CONTRACTOR AND OWNER.

LIBRARY SPACE DESIGN NOTES

1. FINAL LIBRARY FURISHINGS DESIGN TO BE REVIEWED AND APPROVED BY ARCHITECT AND DSA PRIOR TO CONSTRUCTION.
2. PROVIDE 5% MINIMUM ACCESSIBLE WORKSTATIONS OF EACH TYPE IN EACH AREA INCLUDING CUBICLES, READING AND STUDY CARRELS, AND COMPUTER STATIONS.
3. COUNTER/TABLE TOP HEIGHTS TO BE 34" MAX. AFF.
4. BOOK DROP TO BE 48" MAX. AFF (36" AFF PREFERRED)
5. CARD CATALOGS AND MAGAZINE DISPLAYS MUST BE 48" MAX AFF FOR FRONT REACH AND 54" MAX AFF FOR SIDE REACH (48" AFF PREFERRED)

LEGEND

DESIGNATES REQUIRED DOOR CLEARANCE AREA, SEE DETAILS 2&7/8.50

KEY PLAN

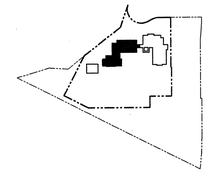

tBP
architecture
planning
interiors
management

LICENSED ARCHITECT
STATE OF CALIFORNIA
RICHARD A. MANGINI, A.I.A.
NO. C-8885
EXP. 12-31-04

tBP/Architecture
1000 Burnett Ave, Suite 140
Concord, CA 94520
ph: 925.246.6419 fx: 925.246.6495

architect

consultant

REGISTRATION STAMP
DIV. OF THE STATE ARCHITECT
OFFICE OF REGULATION SERVICES
APPL NO. 105719
AC 15 FLS 1/1
DATE

agency

SAN RAMON VALLEY CENTER

CONTRA COSTA COMMUNITY COLLEGE DISTRICT

SAN RAMON, CALIFORNIA

owner

tBP project number : 20212.00

file name: A-0911_lffe.dwg

drawn by: DM checked by:

date: 03-04-04 plot scale: 1:1

Rev:	date:	description:

drawing title: building no.:

FIRST FLOOR- WEST
FF & E

drawing no.:

A9.11

drawing of

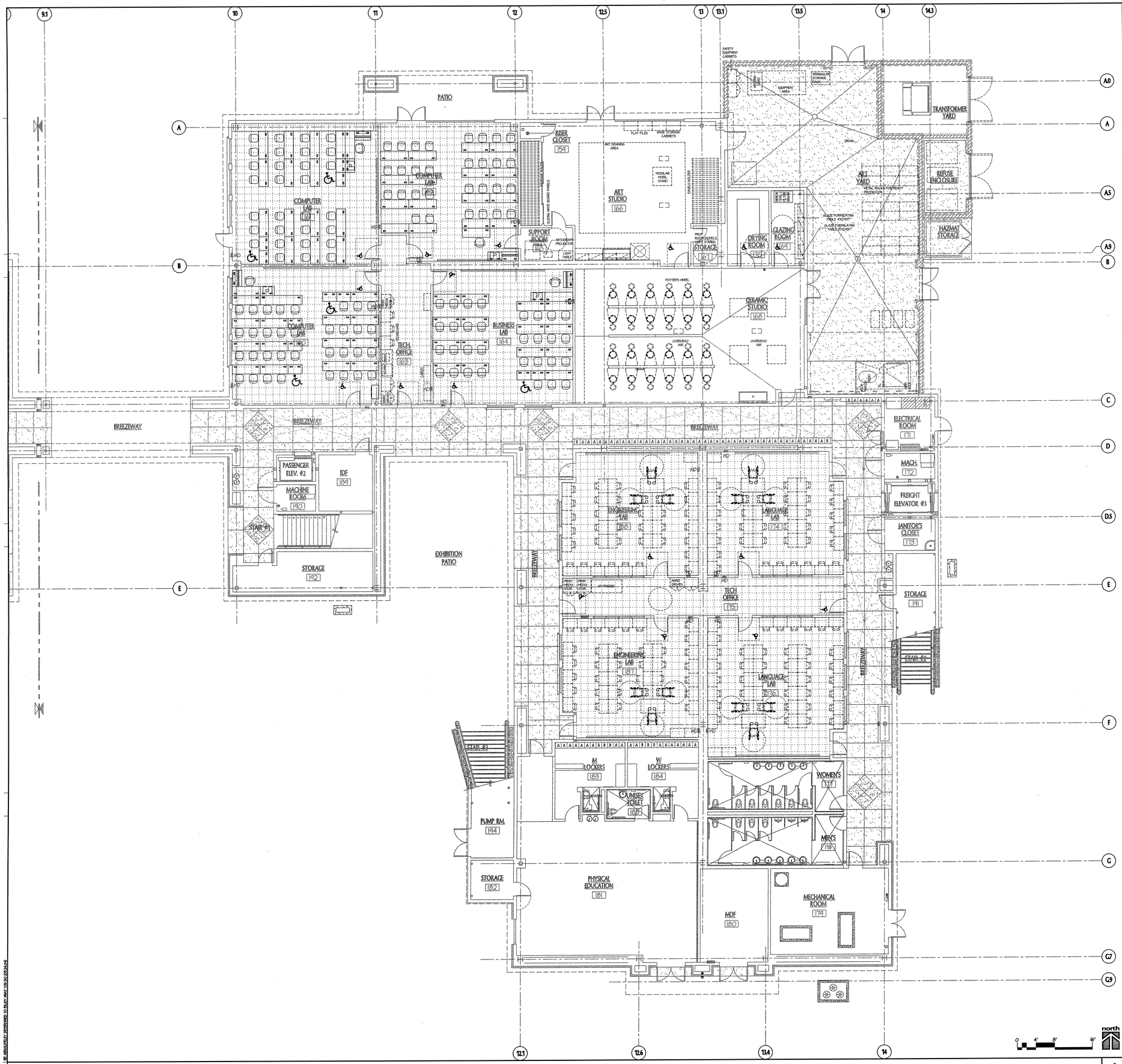

FIRST FLOOR PLAN - EAST
SCALE: 1/8" = 1'-0"

1

GENERAL NOTES

1. UNLESS NOTED OTHERWISE, ALL FURNITURE AND EQUIPMENT SHOWN ON THIS PLAN IS TO BE PROVIDED AND INSTALLED BY THE OWNER.
2. FURNITURE AND EQUIPMENT LOCATIONS INDICATED ARE SUBJECT TO CHANGE AND ARE PROVIDED FOR COORDINATION CONVENIENCE BETWEEN THE CONTRACTOR AND OWNER.

LIBRARY SPACE DESIGN NOTES

1. FINAL LIBRARY FURNISHINGS DESIGN TO BE REVIEWED AND APPROVED BY ARCHITECT AND DSA PRIOR TO CONSTRUCTION.
2. PROVIDE 5% MINIMUM ACCESSIBLE WORKSTATIONS OF EACH TYPE IN EACH AREA INCLUDING CUBICLES, READING AND STUDY CARRELS, AND COMPUTER STATIONS.
3. COUNTER/TABLE TOP HEIGHTS TO BE 34" MAX. AFF.
4. BOOK DROP TO BE 48" MAX. AFF (36" AFF PREFERRED)
5. CARD CATALOGS AND MAGAZINE DISPLAYS MUST BE 48" MAX AFF FOR FRONT REACH AND 54" MAX AFF FOR SIDE REACH (48" AFF PREFERRED)

LEGEND

DESIGNATES REQUIRED DOOR CLEARANCE AREA, SEE DETAILS 2&7/8.50

KEY PLAN

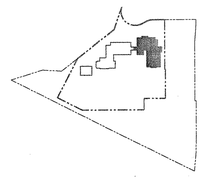

tBP
architecture
planning
interiors
management

LICENSED ARCHITECT VINCENTELLI M. C-48815 STATE OF CALIFORNIA

tBP/Architecture
1000 Burnett Ave, Suite 140
Concord, CA 94520
ph: 925.246.6419 fx: 925.246.6495

architect

consultant

APPROVED DEPARTMENT OF THE STATE ARCHITECT OFFICE OF REGULATION SERVICES
APPL NO. 10-118
BY [signature]
DATE 8-14-08

agency

SAN RAMON VALLEY CENTER

CONTRA COSTA COMMUNITY COLLEGE DISTRICT

SAN RAMON, CALIFORNIA

owner

tBP project number : 20212.00
file name: A-0912_1ffe.dwg
drawn by: DM checked by:
date: 08-04-04 plot scale: 1:1

Rev:	date:	description:
1	08-24-04	DESIGN CLARIFICATIONS

drawing title: FIRST FLOOR - EAST FF & E

building no.:

drawing no.: A9.12

drawing of

DO NOT SCALE DRAWINGS. DIMENSIONS ARE ABSOLUTELY DETERMINED TO ENJOY WHAT YOU DO. 925.246.6419

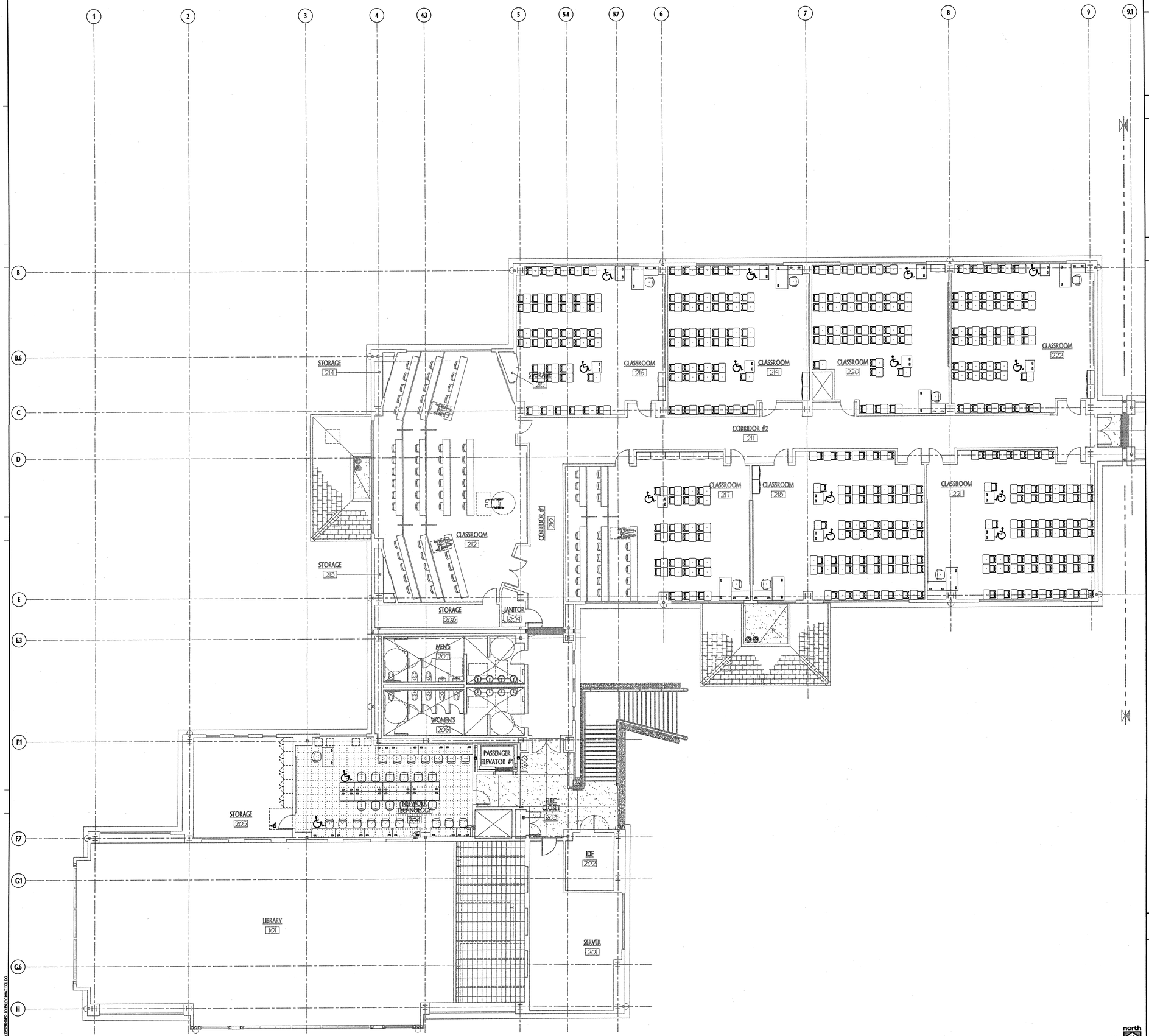

GENERAL NOTES

1. UNLESS NOTED OTHERWISE, ALL FURNITURE AND EQUIPMENT SHOWN ON THIS PLAN IS TO BE PROVIDED AND INSTALLED BY THE OWNER.
2. FURNITURE AND EQUIPMENT LOCATIONS INDICATED ARE SUBJECT TO CHANGE AND ARE PROVIDED FOR COORDINATION CONVENIENCE BETWEEN THE CONTRACTOR AND OWNER.

LIBRARY SPACE DESIGN NOTES

1. FINAL LIBRARY FURNISHINGS DESIGN TO BE REVIEWED AND APPROVED BY ARCHITECT AND DSA PRIOR TO CONSTRUCTION.
2. PROVIDE 5% MINIMUM ACCESSIBLE WORKSTATIONS OF EACH TYPE IN EACH AREA INCLUDING CUBICLES, READING AND STUDY CARRELS, AND COMPUTER STATIONS.
3. COUNTER/TABLE TOP HEIGHTS TO BE 34" MAX. AFF.
4. BOOK DROP TO BE 48" MAX. AFF (36" AFF PREFERRED)
5. CARD CATALOGS AND MAGAZINE DISPLAYS MUST BE 48" MAX AFF FOR FRONT REACH AND 54" MAX AFF FOR SIDE REACH (48" AFF PREFERRED)

LEGEND

DESIGNATES REQUIRED DOOR CLEARANCE AREA, SEE DETAILS 2&7/A.50

KEY PLAN

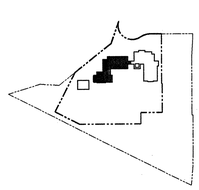

SECOND FLOOR PLAN - WEST
SCALE: 1/8" = 1'-0"

1

tBP
architecture
planning
interiors
management

LICENSED ARCHITECT MARION ALPS RENEWAL 08/31/2005 RENEWAL 08/31/2007 No. C-26885 STATE OF CALIFORNIA

tBP/architecture
1000 Burnett Ave, Suite 140
Concord, CA 94520
ph: 925.246.6419 fx: 925.246.6495

architect

consultant

IDENTIFICATION STAMP
DIV. OF THE STATE ARCHITECT
OFFICE OF REGIONAL ADMINISTRATION
APPL NO. 1107119
DATE 10-15-08

agency

SAN RAMON VALLEY CENTER

CONTRA COSTA COMMUNITY COLLEGE DISTRICT

SAN RAMON, CALIFORNIA

owner

tBP project number : 20212.00
file name: A-0421_2FFe.dwg
drawn by: DM checked by:
date: 03-09-04 plot scale: 1:1

Rev:	date:	description:

drawing title: SECOND FLOOR - WEST FF & E
building no:
drawing no: A9.21
drawing of

© ARCHITECTURE DESIGNED BY ALPHA MARK, 1999-2005

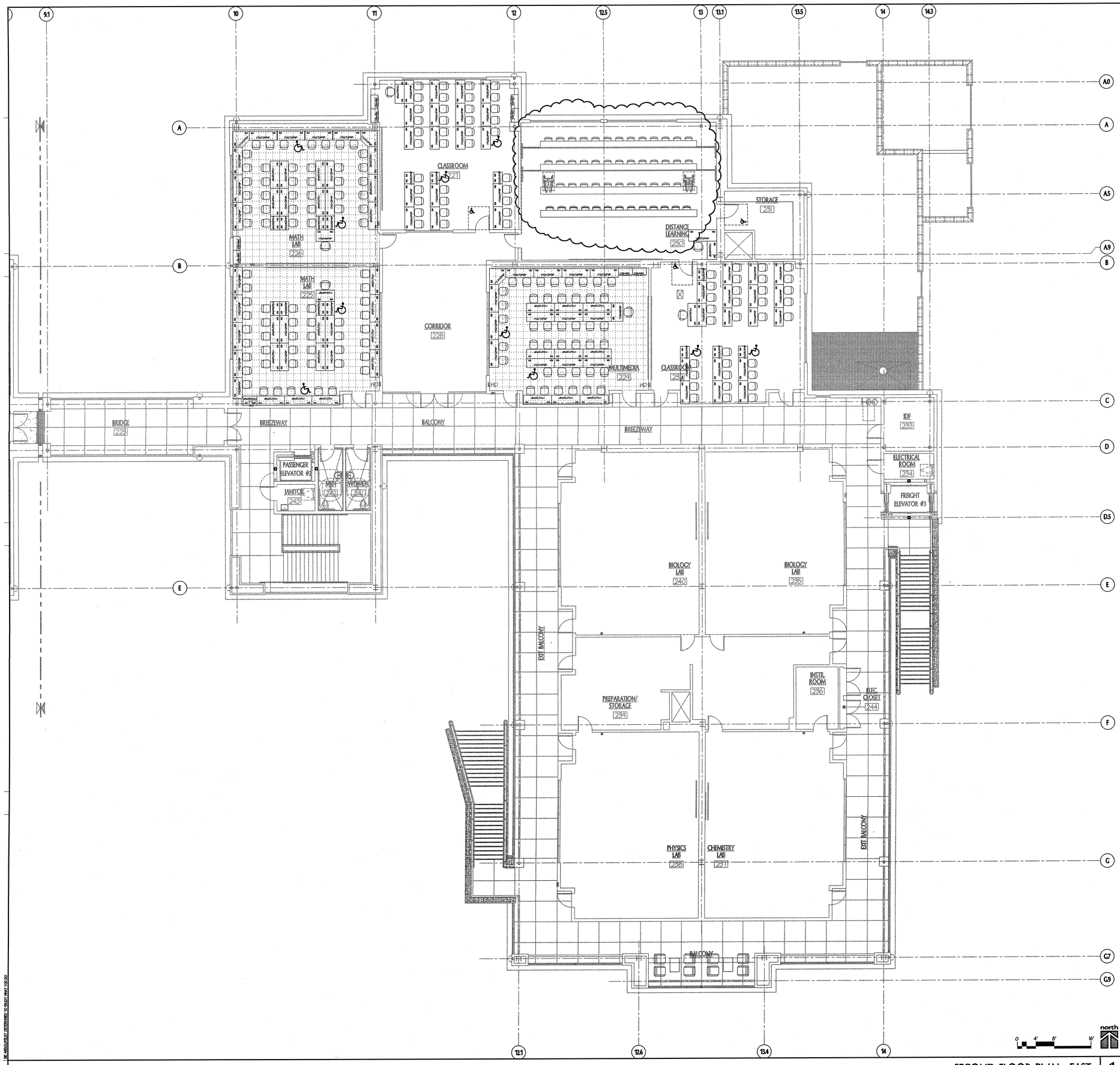

SECOND FLOOR PLAN - EAST
SCALE: 1/8" = 1'-0"
1

GENERAL NOTES

1. UNLESS NOTED OTHERWISE, ALL FURNITURE AND EQUIPMENT SHOWN ON THIS PLAN IS TO BE PROVIDED AND INSTALLED BY THE OWNER.
2. FURNITURE AND EQUIPMENT LOCATIONS INDICATED ARE SUBJECT TO CHANGE AND ARE PROVIDED FOR COORDINATION CONVENIENCE BETWEEN THE CONTRACTOR AND OWNER

LIBRARY SPACE DESIGN NOTES

1. FINAL LIBRARY FURISHINGS DESIGN TO BE REVIEWED AND APPROVED BY ARCHITECT AND DSA PRIOR TO CONSTRUCTION.
2. PROVIDE 5% MINIMUM ACCESSIBLE WORKSTATIONS OF EACH TYPE IN EACH AREA INCLUDING CUBICLES, READING AND STUDY CARRELS, AND COMPUTER STATIONS.
3. COUNTER/TABLE TOP HEIGHTS TO BE 34" MAX. AFF.
4. BOOK DROP TO BE 48" MAX. AFF (36" AFF PREFERRED)
5. CARD CATALOGS AND MAGAZINE DISPLAYS MUST BE 48" MAX AFF FOR FRONT REACH AND 54" MAX AFF FOR SIDE REACH (48" AFF PREFERRED)

LEGEND

DESIGNATES REQUIRED DOOR CLEARANCE AREA, SEE DETAILS 2&7/8.50

KEY PLAN

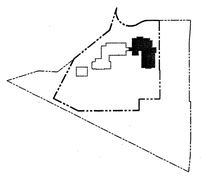

tBP
architecture
planning
interiors
management

LICENSED ARCHITECT
RICHARD WARNOCK, AIA
NO. C-8885
DATE 12-31-05
STATE OF CALIFORNIA

tBP/Architecture
1000 Burnett Ave, Suite 140
Concord, CA 94520
ph: 925.246.6419 fx: 925.246.6495

architect

consultant

DIVISION OF THE STATE ARCHITECT
OFFICE OF REGULATION SERVICES
APPL. NO. 110719
AC
DATE

agency

SAN RAMON VALLEY CENTER

CONTRA COSTA COMMUNITY COLLEGE DISTRICT

SAN RAMON, CALIFORNIA

owner

tBP project number : 20212.00
file name: A-0922_2ffe.dwg
drawn by: DM checked by:
date: 03-09-04 plot scale: 1:1

Rev:	date:	description:

drawing title: building no.:
SECOND FLOOR - EAST
FF & E

drawing no.:
A9.22
drawing of

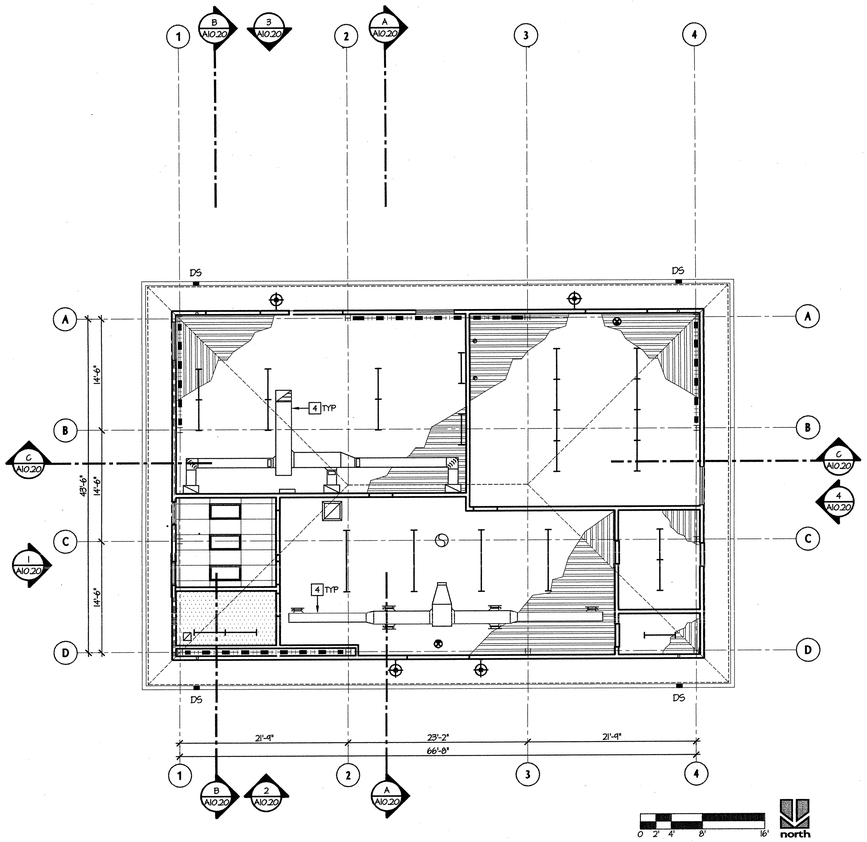

REFLECTED CEILING PLAN
SCALE: 1/8"= 1'-0" | 2

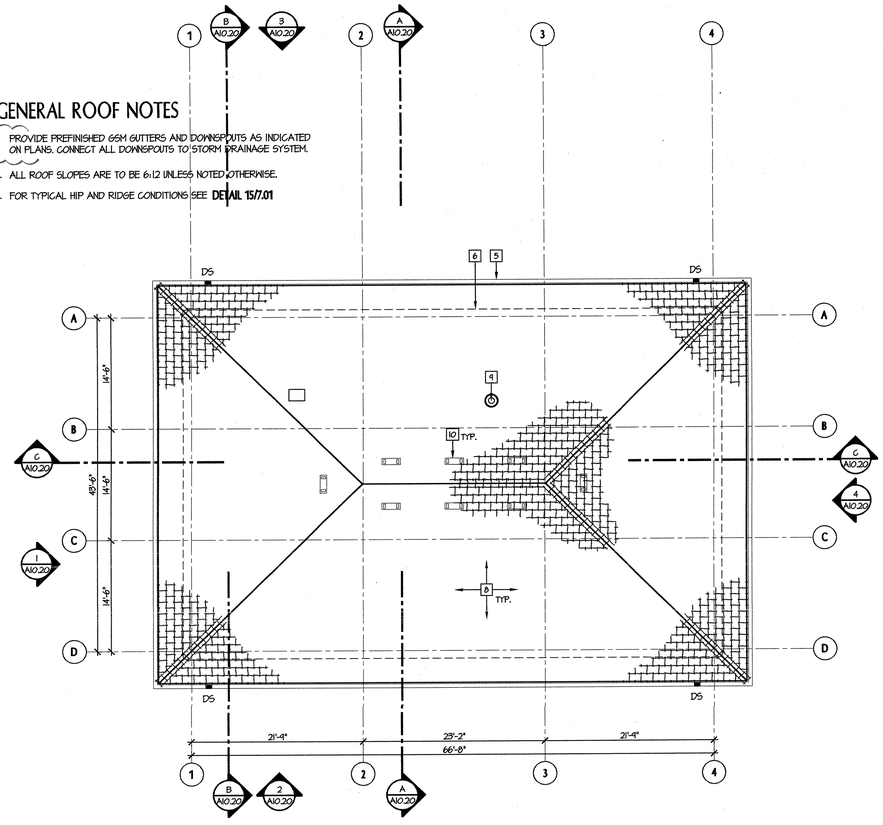

ROOF PLAN
SCALE: 1/8"= 1'-0" | 3

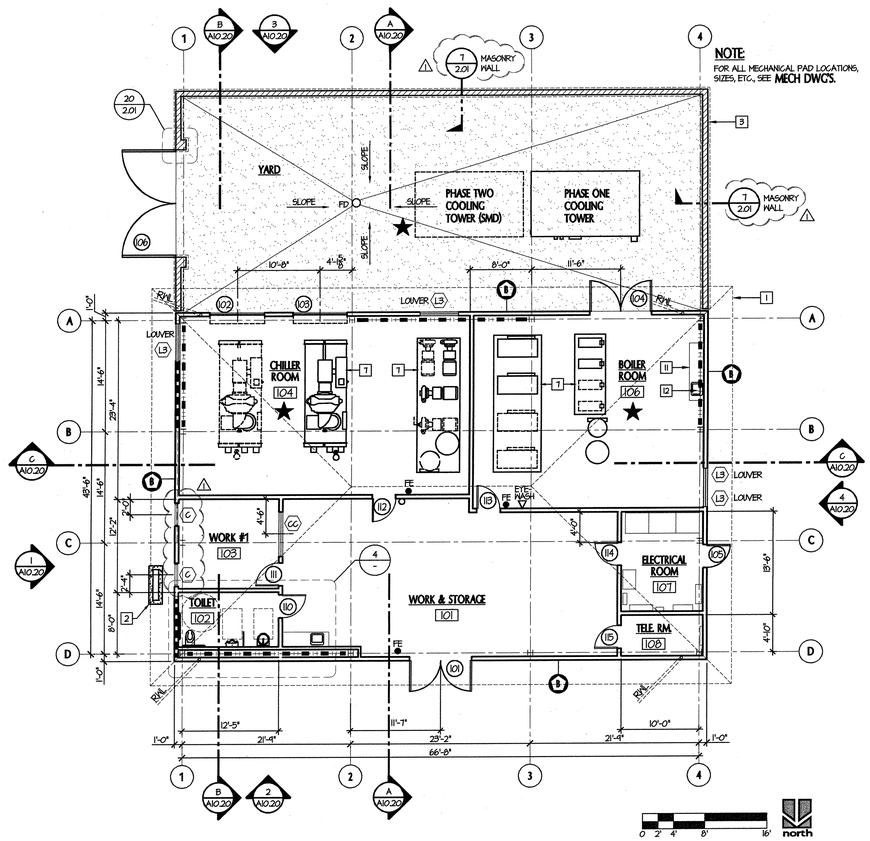

FIRST FLOOR PLAN
SCALE: 1/8"= 1'-0" | 1

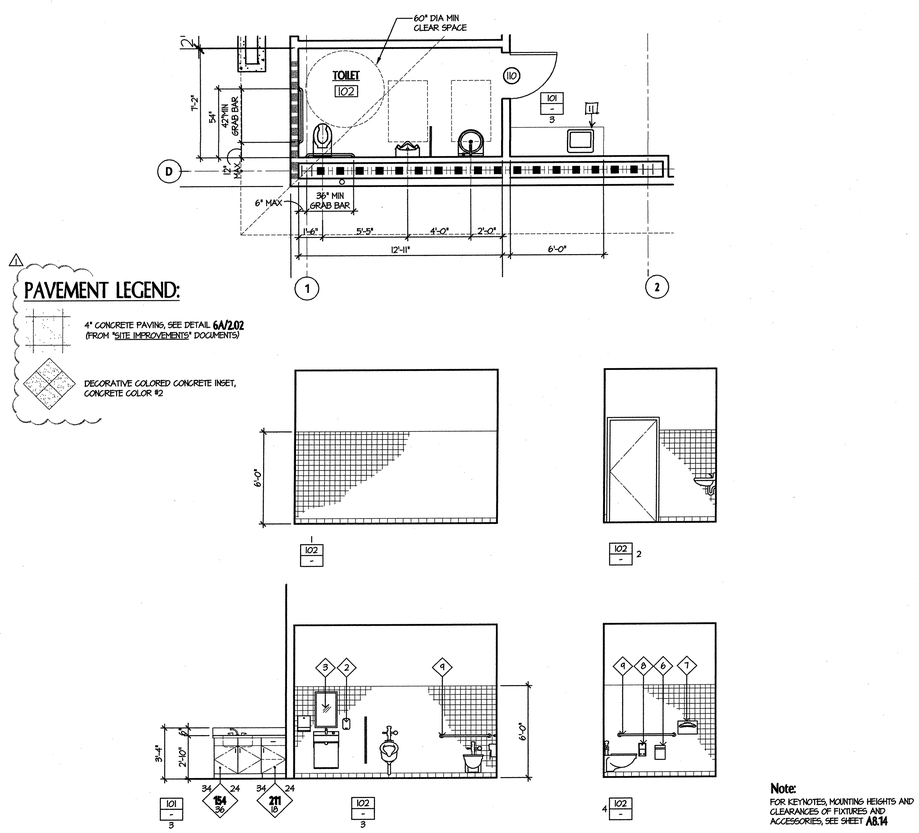

ENLARGED RESTROOM PLAN
SCALE: 1/4"= 1'-0" | 4

GENERAL NOTES

1. ALL DIMENSIONS SHALL BE TAKEN TO FACE OF WALL FINISH, AS DEFINED IN THE INTERIOR PARTITION SCHEDULE, UNLESS NOTED OTHERWISE.
2. ALL DOOR OPENINGS SHALL BE LOCATED 6" FROM HINGED EDGE OF DOOR TO FACE OF FINISH AT ADJACENT WALL CORNER, UNLESS DIMENSIONED OTHERWISE. SEE DETAIL **2/8.50**
3. A POSTED SIGN STATING THE ROOM CAPACITY SHALL BE PROVIDED AS PER **SEC. 10007.2.6 CBC**. AT ALL SPACES WHERE THE OCCUPANCY LOAD IS INDICATED ON THE FLOOR PLAN.
4. UNLESS NOTED OTHERWISE, ALL INTERIOR PARTITIONS ARE TYPE (A)
5. ALL PARTITIONS TO RECEIVE WALL MOUNTED EQUIPMENT, ACCESSORIES, FIXTURES, ℄ ETC., SHALL BE PROVIDED WITH BACKING PLATES PER DETAILS **16, 17, & 18/4.02**

KEYNOTES

1 LINE OF ROOF OVERHANG ABOVE (SHOWN "DASHED")
2 PAD MOUNTED CONDENSING UNIT, SEE **MECH. DWG'S.**
3 8" SPLIT FACE CMU WALL
4 EXPOSED DUCTWORK, PAINT FINISH, SEE **MECH. DWG'S.**
5 CONTINUOUS GUTTER, SEE DETAIL **6/7.01**
6 LINE OF WALL BELOW (SHOWN "DASHED")
7 PAD MOUNTED MECH. EQUIPMENT, SEE **MECH. DWG'S.**
8 CONCRETE ROOF TILE SYSTEM, SEE DETAIL **18A/3.01**
9 FUME HOOD EXHAUST SYSTEM, SEE **MECH. DWG'S.**
10 118 SQ. IN. LOUVERED VENT, PAINT TO MATCH ADJACENT ROOF TILES
11 COUNTERTOP, SEE DETAIL **6/6.50**
12 STAINLESS STEEL SINK, SEE **PLUMB. DWG'S.**

FLOOR PLAN LEGEND

= 1-HOUR RATED WALL
= MASONRY WALL CONSTRUCTION
★ = FOR ALL EQUIPMENT IN THESE AREAS, SEE **MECHANICAL DWG'S.**
(A) = INTERIOR PARTITION, SEE SHEET **4.02**
(A) = EXTERIOR WALL ASSEMBLY, SEE DETAIL **9/3.01**
252 = DOOR REFERENCE, SEE DOOR SCHEDULES, SHEETS **8.01 CP**
(A) = WINDOW REFERENCE, SEE WINDOW SCHEDULES, SHEETS **8.80**
FE = SURFACE MOUNTED FIRE EXTINGUISHER
FE = RECESSED FIRE EXTINGUISHER, SEE DETAILS **11 & 17/4.03**
MD = RECESSED DATA DISTRIBUTION PANEL, SEE **ELEC. DWG'S.**
RWL = 4" CAST IRON RAIN WATER LEADER IN WALL CONNECT TO STORM DRAINAGE SYSTEM, SEE **PLUMB. DWG'S.**
= 4" CAST IRON RAIN WATER LEADER IN WALL WITH CONDUCTOR HEAD ABOVE (SHOWN DASHED)
EP = SURFACE MOUNTED ELECTRICAL PANEL, SEE **ELEC. DWG'S.**
EP = RECESSED ELECTRICAL PANEL, SEE **12 & 17/4.03 & ELEC. DWG'S.**

SYMBOLS - REFLECTED CEILING PLAN

LIGHTING:
WALL MOUNTED
2X4 FLUORESCENT
4' STRIP FLUORESCENT
8' STRIP FLUORESCENT
EXIT SIGN

MECHANICAL:
RETURN REGISTER
SUPPLY REGISTER
EXHAUST REGISTER
EXHAUST FAN

MATERIALS:
2X4 ACOUSTICAL TILE CEILING, SEE SHEET **5.01**
CEMENT PLASTER FINISH. (12'-0" A.F.F. U.N.O.) "CJ" = CONTROL JOINT, SEE SHEET **5.02**
GYPSUM BD FINISH. SEE SHEET **5.02**
EXPOSED METAL DECK

1. MECHANICAL GRILLES, REGISTERS, EXTERIOR LOUVERS AND ELECTRICAL FIXTURES ARE SHOWN FOR LOCATION PURPOSES ONLY. VERIFY QUANTITY AND SIZES WITH MECHANICAL OR ELECTRICAL DRAWINGS.
2. ALL MECHANICAL, ELECTRICAL, STORAGE AND JANITOR ROOMS TO HAVE GYPSUM BOARD TO UNDERSIDE OF STRUCTURE UNLESS NOTED OTHERWISE.
3. FOR CEILING FINISHES AND HEIGHTS SEE SHEETS **8.01CP**

KEY PLAN

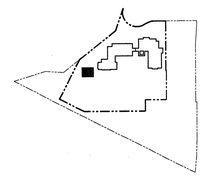

tBP
architecture
planning
interiors
management
tBP/Architecture
1000 Burnett Ave, Suite 140
Concord, CA 94520
ph: 925.246.6419 fx: 925.246.6495

architect

consultant

APPROVED
DIV. OF THE STATE ARCHITECT
OFFICE OF REGIONAL SERVICES
BY: [signature]
APPL. NO. 02019
DATE: 6.4.04

agency

SAN RAMON VALLEY CENTER

CONTRA COSTA COMMUNITY COLLEGE DISTRICT
SAN RAMON, CALIFORNIA

owner

tBP project number : 20212.00
file name: A-1010_CP.dwg
drawn by: R.A. checked by:
date: 03-09-04 plot scale: 1:1

Rev:	date:	description:
1	03-29-04	DESIGN CLARIFICATIONS

drawing title: FLOOR / ROOF & REFLECTED CEILING PLAN
building no.:
drawing no.: A10.10 CP
drawing of

BE ABSOLUTELY CERTAIN TO VERIFY ALL DIMENSIONS AND CONDITIONS IN THE FIELD

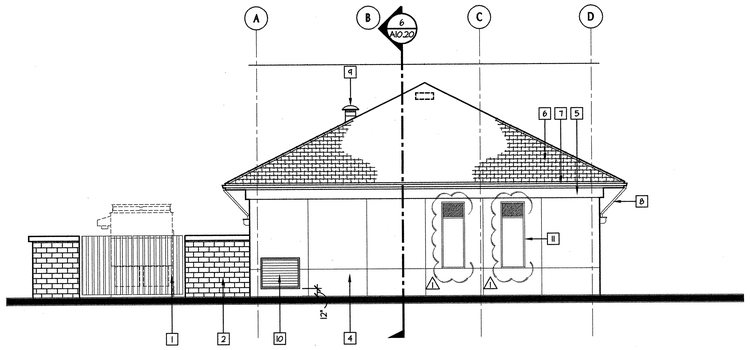

EAST ELEVATION
SCALE: 1/8"=1'-0"

1

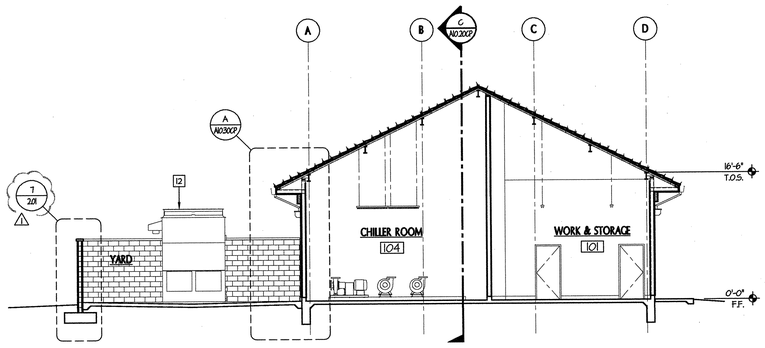

BUILDING SECTION
SCALE: 1/8"=1'-0"

A

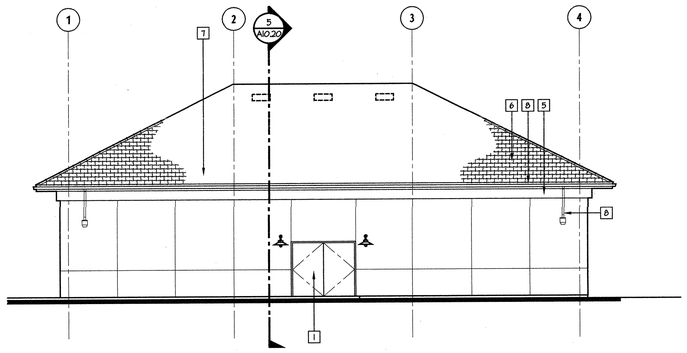

NORTH ELEVATION
SCALE: 1/8"=1'-0"

2

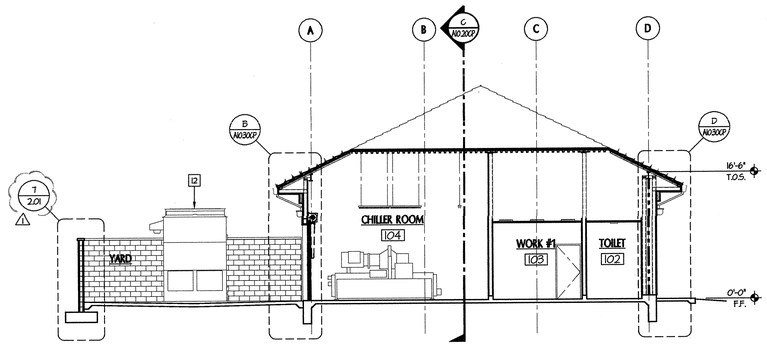

BUILDING SECTION
SCALE: 1/8"=1'-0"

B

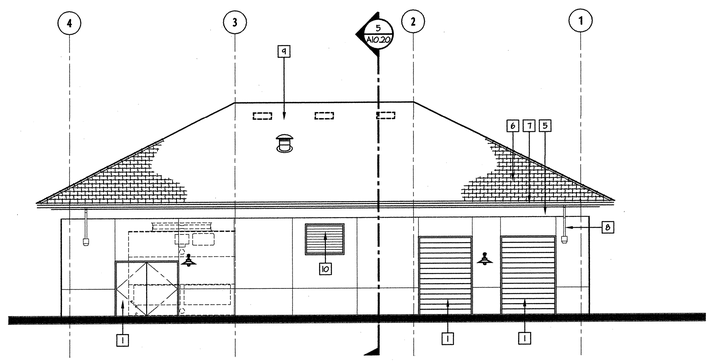

SOUTH ELEVATION
SCALE: 1/8"=1'-0"

3

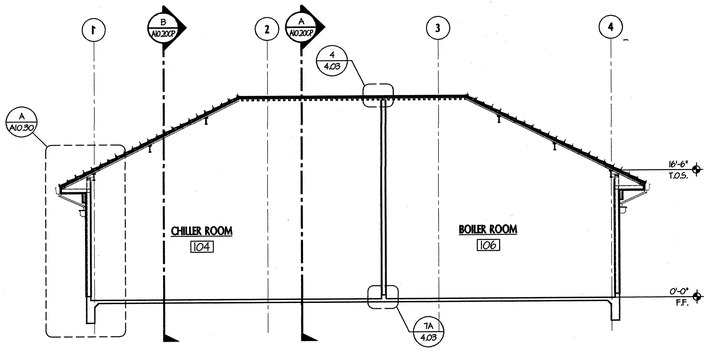

BUILDING SECTION
SCALE: 1/8"=1'-0"

C

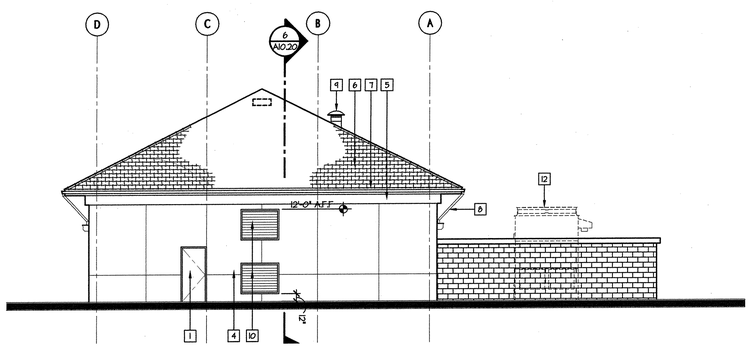

WEST ELEVATION
SCALE: 1/8"=1'-0"

4

NOTES

1. DOOR(S), SEE DOOR SCHEDULE
2. SPLIT FACED CMU WALL
3. WALL CAP
4. CEMENT PLASTER
5. PRE-COATED FOAM CORNICE, PLASTER FINISH
6. CONCRETE ROOF TILES, SEE ROOF PLAN
7. METAL GUTTER
8. RAIN GUTTER LEADER
9. FUME HOOD EXHAUST FLUE SYSTEM, SEE MECHANICAL DRAWINGS
10. LOUVERS AS SCHEDULED
11. WINDOW SYSTEM, SEE FLOOR PLAN AND WINDOW SCHEDULES
12. COOLING TOWER, SEE MECH. DWGS. ⚠

tBP
architecture
planning
interiors
management

LICENSED ARCHITECT MARK A. BUCHANAN No. C-28857 STATE OF CALIFORNIA

tBP/Architecture
1000 Burnett Ave, Suite 140
Concord, CA 94520
ph: 925.246.6419 fx: 925.246.6495

architect

consultant

APPROVED
DEPARTMENT OF THE STATE ARCHITECT
OFFICE OF REGIONAL SERVICES
APPL. NO. 102119
BY: [signature]
DATE: 4-7-04

agency

SAN RAMON VALLEY CENTER

CONTRA COSTA COMMUNITY COLLEGE DISTRICT

SAN RAMON, CALIFORNIA

owner

tBP project number : 20212.00
file name: A-1020_CP.dwg
drawn by: R.A. checked by:
date: 03-01-04 plot scale: 1:1

Rev:	date:	description:
⚠1	03-24-04	DESIGN CLARIFICATIONS

drawing title: EXTERIOR ELEVATIONS & SECTIONS

building no.:

drawing no.: A10.20 CP

drawing of

THE ARCHITECT IS DETERMINED TO DELIVER PROJECTS ON TIME AND ON BUDGET

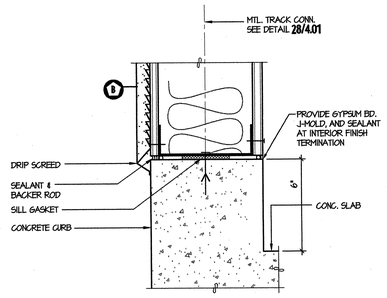

EXTERIOR CURB AT CENTRAL PLANT SCALE: 3" = 1'-0" 3

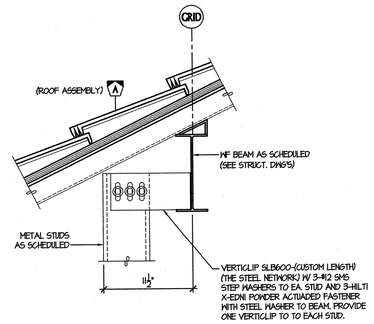

METAL STUD WALL TO BEAM SCALE: 1-1/2" = 1'-0" 4

GENERAL NOTES

1. FOR TYPICAL STEEL STUD FRAMING DETAILS, SEE SHEET **4.01**

KEYNOTES

1. CMU YARD WALL BEYOND
2. PAINTED GSM DOWNSPOUT AND COLLECTOR HEAD SYSTEM, SEE ROOF PLANS AND DETAIL **11/7.01**
3. CEILING SYSTEM AS SHECULED, SEE ROOM FINISH SCHEDULE, SHEET **8.01CP**
4. 4"W X 14" H PRE-COATED DECORATIVE FOAM SHAPE APPLIED TO BROWN COAT OF CEMENT PLASTER WALL SYSTEM.
5. STEEL FRAMING SYSTEM, SEE STRUCTURAL FRAMING PLANS

LEGEND

= STRUCTURAL STEEL BRACE FRAME, SEE STRUCTURAL DWG'S.

= RATED ASSEMBLY, SEE FLOOR PLAN FOR TYPE AND EXTENT

A = EXTERIOR WALL ASSEMBLY, SEE DETAIL **9/3.01**

A = HORIZONTAL ASSEMBLY, SEE DETAIL **18/3.01**

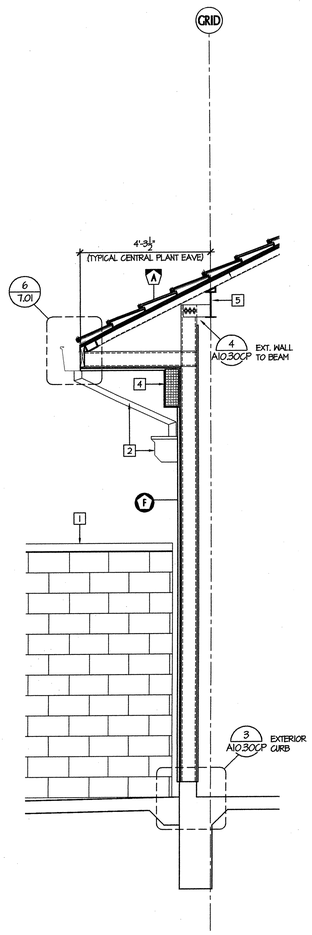

WALL SECTION SCALE: 1/2" = 1'-0" A

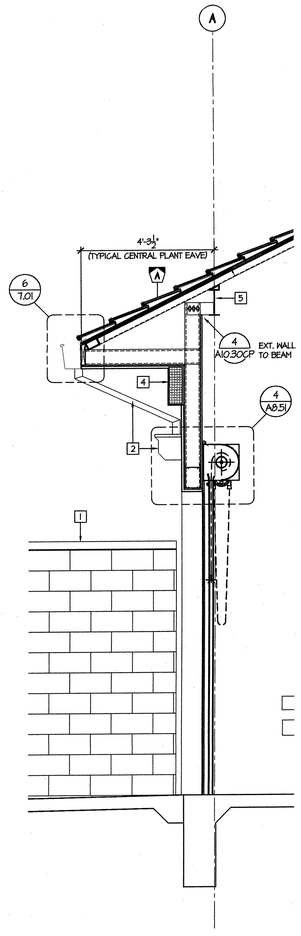

WALL SECTION SCALE: 1/2" = 1'-0" B

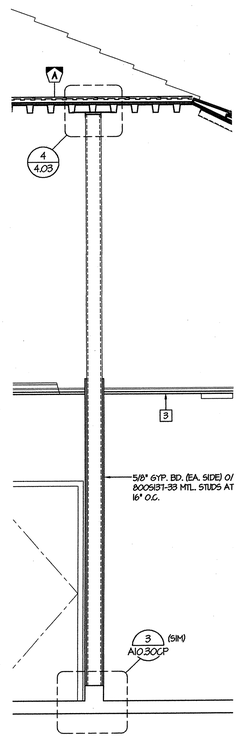

WALL SECTION SCALE: 1/2" = 1'-0" C

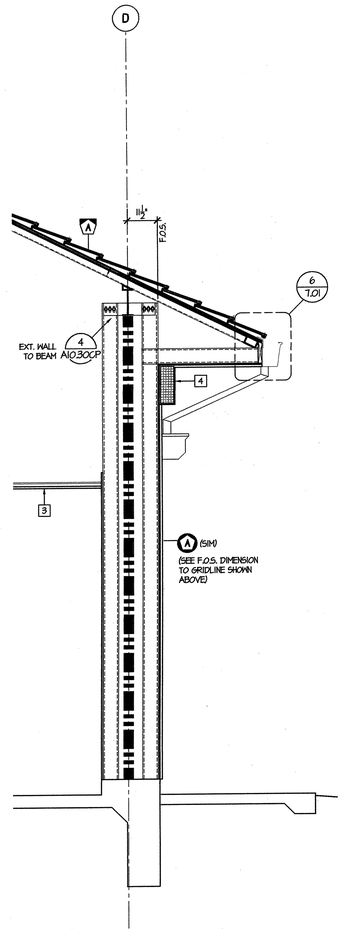

WALL SECTION SCALE: 1/2" = 1'-0" D

BE ABSOLUTELY DETERMINED TO ENJOY WHAT YOU DO

tBP architecture planning interiors management

tBP/Architecture
1000 Burnett Ave, Suite 140
Concord, CA 94520
ph: 925.246.6419 fx: 925.246.6495

architect

consultant

DIV. OF THE STATE ARCHITECT OFFICE OF REGULATION SERVICES
APPL. NO. 10519
AC FLS SS
DATE

agency

SAN RAMON VALLEY CENTER

CONTRA COSTA COMMUNITY COLLEGE DISTRICT

SAN RAMON, CALIFORNIA

owner

tBP project number : 20212.00

file name: A-1030_wsec.dwg

drawn by: MM checked by:

date: 03-04-04 plot scale: 1:1

Rev:	date:	description:

drawing title: building no.:

WALL SECTION

drawing no.:

A10.30 CP

drawing of

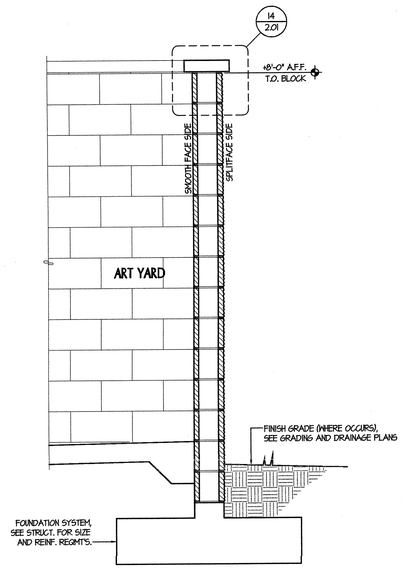

CMU WALL — SCALE: 3/4" = 1'-0" — 7

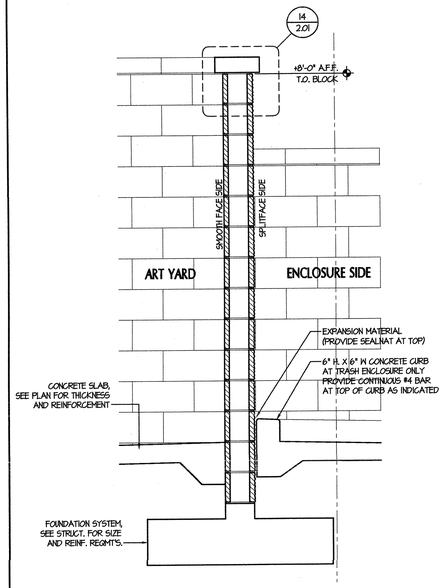

CMU WALL — SCALE: 3/4" = 1'-0" — 8

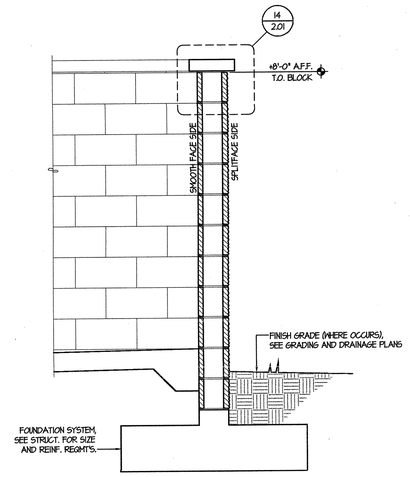

CMU WALL — SCALE: 3/4" = 1'-0" — 9

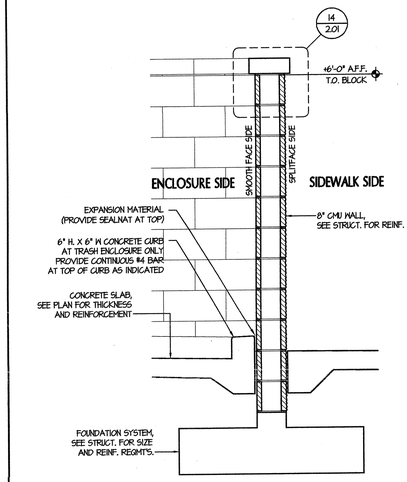

CMU WALL — SCALE: 3/4" = 1'-0" — 10

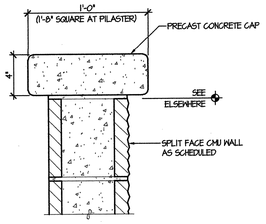

CONCRETE CAP AT CMU WALL — SCALE: NONE — 14

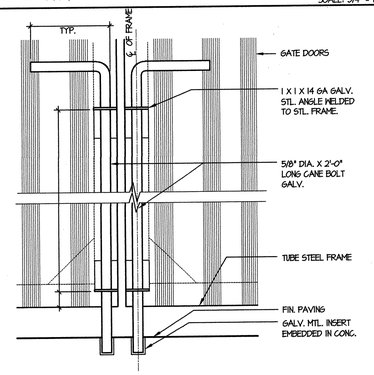

10 — SCALE: 3" = 1'-0" — 15

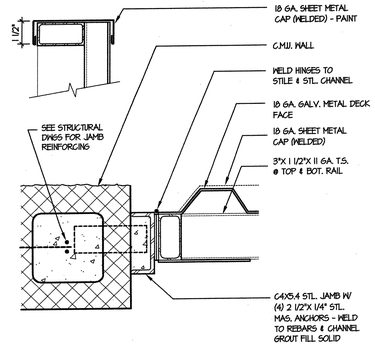

HINGE DETAIL — SCALE: 3" = 1'-0" — 20

THE DRAWINGS ARE DESIGNED TO FULLY MEET 2001 CBC REQUIREMENTS

tBP
architecture
planning
interiors
management

LICENSED ARCHITECT ROBERT W. WINSLOW No. C-19895 STATE OF CALIFORNIA

tBP/Architecture
1000 Burnett Ave, Suite 140
Concord, CA 94520
ph: 925.246.6419 fx: 925.246.6495

architect

consultant

APPROVED
CONTRACTOR'S STAMP
DEPT. OF STATE ARCHITECT
DIVISION OF THE STATE ARCHITECT
APPL. NO. 105119
FILE NO.
ACCESS
DATE 6-4-04

agency

SAN RAMON VALLEY CENTER
CONTRA COSTA COMMUNITY COLLEGE DISTRICT
SAN RAMON, CALIFORNIA

owner

tBP project number : 20212.00
file name: D11-0201.dwg
drawn by: checked by:
date: 03-09-04 plot scale: 1:1

Rev:	date:	description:
1	03-24-04	DESIGN CLARIFICATIONS

drawing title: building no.:
SITE DETAILS

drawing no.:
2.01
drawing of

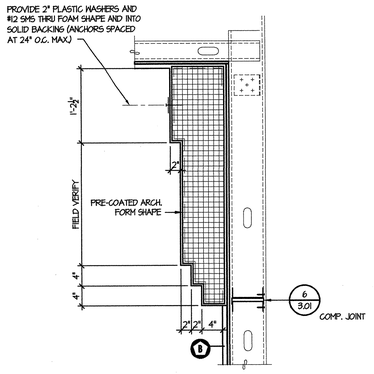

EXTERIOR ARCH. FOAM DETAIL

SCALE: 1" = 1'-0" | 1

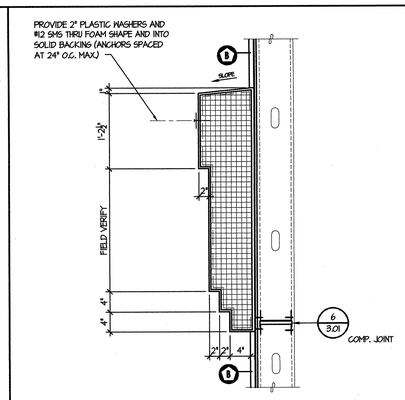

EXTERIOR ARCH. FOAM DETAIL

SCALE: 1" = 1'-0" | 2

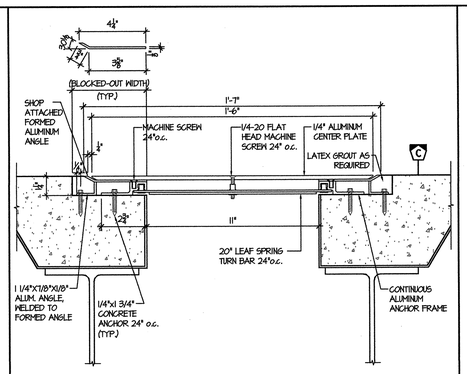

2ND FLOOR EXPANSION JOINT

SCALE: 3" = 1'-0" | 3

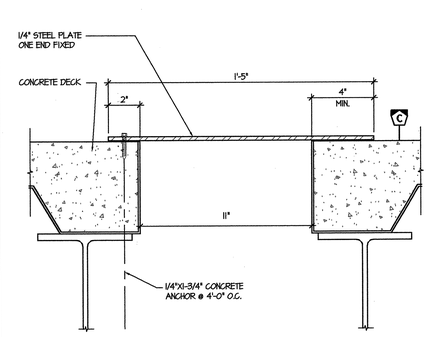

ATTIC FLOOR EXPANSION JOINT

SCALE: 3" = 1'-0" | 4

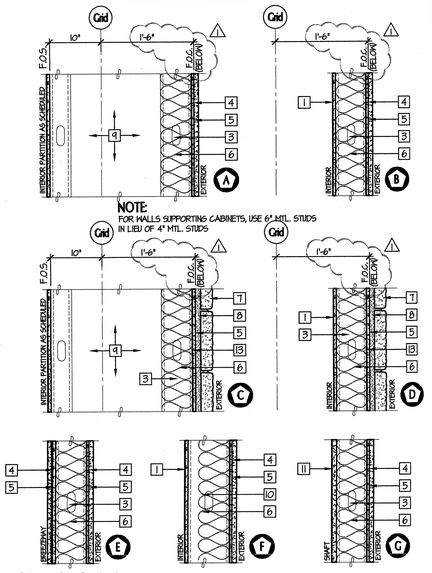

(UL DESIGN NO. U425)

ASSEMBLY KEYNOTES:

1. 5/8" GYP. BD. (5/8" TYPE "X" AT 1-HR. FIRE RATED WALLS FINISH AS SCHEDULED)
2. 4" METAL STUDS AT 16" O.C. TO UNDERSIDE OF DECK ABOVE U.N.O.
3. 6" METAL STUDS AT 16" O.C.
4. 7/8" CEMENT PLASTER OVER PAPER BACKED METAL LATH
5. WATERPROOF MEMBRANE OVER 1/2" GYP. SHEATHING
6. R-19 BATT INSULATION
7. STONE VENEER, SEE "STONE VENEER NOTE" BELOW
8. MORTAR SETTING BED, OVER SCRATCH COAT, OVER METAL LATH ATTACHED THRU GYP. SHTG. TO MTL. PANELS W/ SELF-TAPPING SMS AT 12" O.C. HORIZ. AND 6" O.C. VERTICALLY
9. UNCONDITIONED VOID
10. 8" METAL STUDS AT 16" O.C.
11. 1" GYPSUM SHAFT LINER
12. 2 LAYERS 5/8" TYPE "X" GYP. BD.
13. 18 GA. GLAV. STL PANELS ATTACHED TO MTL. STUDS W/ #10 SMS AT 12" O.C.

STONE VENEER NOTE:

FOR ALL STONE VENEER INSTALLED MORE THAN 20' IN HEIGHT ABOVE ADJACENT GRADE, OR WHERE APPLIED OVER EXIT WAYS, PROVIDE MECHANICAL FASTENING SYSTEM AS FOLLOWS: PROVIDE (2) #12 S.S. SMS SCREWS ATTACHED THRU EA. VENEER UNIT INTO SOLID BACKING. PROVIDE 3/4" DIA. X 5/8" COUNTERSINK HOLE AT VENEER FACE ATTACHMENT POINTS FOR CONCEALED FINISH ACHIEVED BY FILLING EA. COUNTERSINK W/ COLORED GROUT TO MATCH ADJACENT VENEER FINISH.

EXTERIOR WALL ASSEMBLIES

SCALE: 1" = 1'-0" | 9

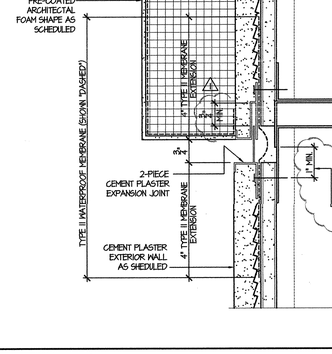

COMPENSATION JOINT AT PRE-COATED FOAM SHAPE

SCALE: HALF | 6

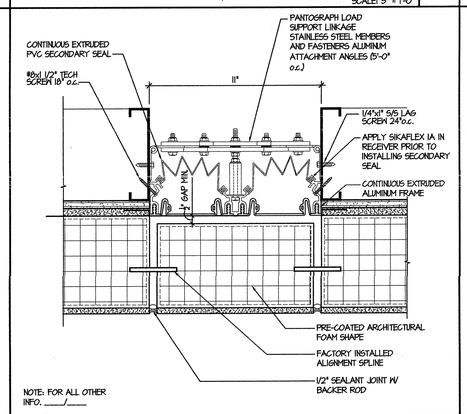

EXTERIOR EXPANSION JOINT @ FOAM TRIM

SCALE: 3" = 1'-0" | 7

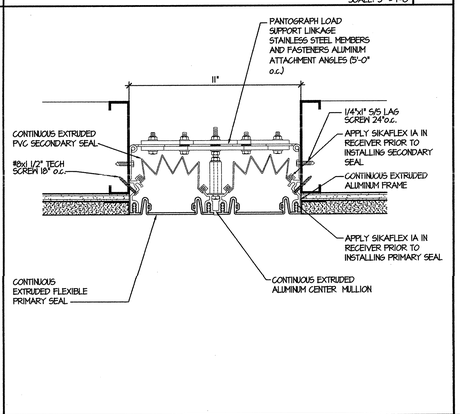

EXTERIOR WALL/CEILING EXPANSION JOINT

SCALE: 3" = 1'-0" | 8

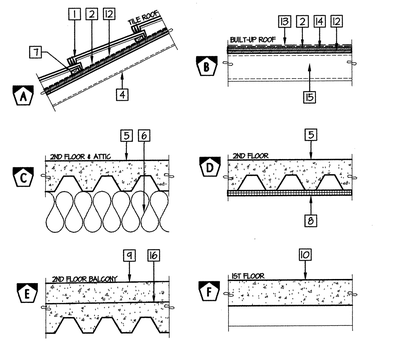

ASSEMBLY KEYNOTES:

1. CONCRETE ROOF TILES W/ PROJECTING LUGS FASTENED DIRECTLY TO 1 1/4" SOUND GRAIN WOOD BATTENS W/ 1 FASTENER PER TILE.
2. WATERPROOF MEMBRANE (SHOWN "DASHED")
3. 1/4" NON-STRUCTURAL GLASS MAT FIBERGLASS ROOF BOARD
4. STRUCTURAL METAL ROOF DECK, SEE STRUCTURAL
5. COMPOSITE FLOOR DECK, SEE STRUCTURAL
6. R-30 BATT INSULATION. (PROVIDE BELOW ATTIC DECK ONLY)
7. 1X2 WOOD BATTENS NAILED TO ROOF SHEATHING OVER UNDERLAYMENT W/ FASTENERS AT 12" O.C., MAX. MAXIMUM BATTEN LENGTH = 4'-0". PROVIDE MINIMUM 1/2" SPACE BETWEEN BATTENS FOR PROPER SUB-DRAINAGE. BATTEN SPACING DETERMINED FOR 5" MINIMUM HEADLAP BASED ON TILE LENGTH.
8. SOUND ABSORBING CEILING PANELS ADHERED TO UNDERSIDE OF COMPOSITE DECK.
9. LIGHTWEIGHT CONCRETE TOPPING SLAB OVER STRUCTURAL COMPOSITE FLOOR DECK. SLOPE TOPPING SLAB AND COMPOSITE DECK SUBSTRATE MIN. ⅛" TO DRAIN AS INDICATED ON PLANS.
10. CONCRETE SLAB ON GRADE, SEE STRUCTURAL FOR VAPOR BARRIER, SAND, AND OTHER REQUIREMENTS
11. MINIMUM 1 LAYER 30# FELT
12. 5/8" PLYWOOD SHEATHING ATTACHED DIRECTLY TO TOP OF EACH METAL DECK FLUTE W/ #10 SELF-FRILLING WAFER HEAD SCREWS AT 12" O.C.
13. BUILT-UP ROOF SYSTEM
14. 1/2" INSULATING DECK BOARD
15. METAL FRAMING SYSTEM, SEE STRUCTURAL DWGS.
16. WATERPROOF MEMBRANE

HORIZONTAL ASSEMBLIES

SCALE: 1" = 1'-0" | 18

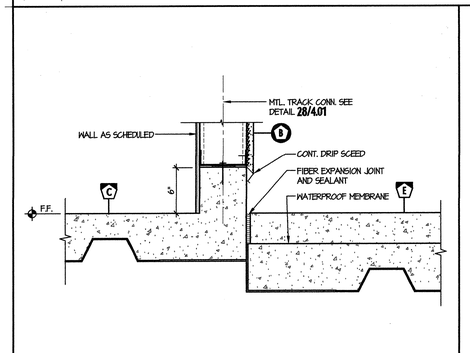

EXTERIOR WALL @ BALCONY DECK

SCALE: 1-1/2" = 1'-0" | 10

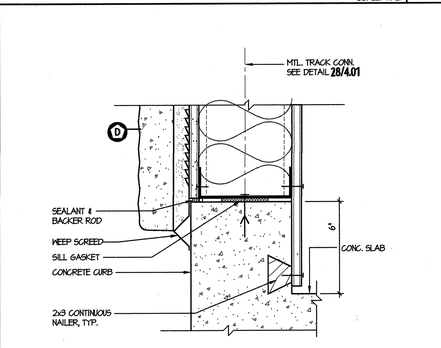

EXTERIOR CURB DETAIL

SCALE: 3" = 1'-0" | 11

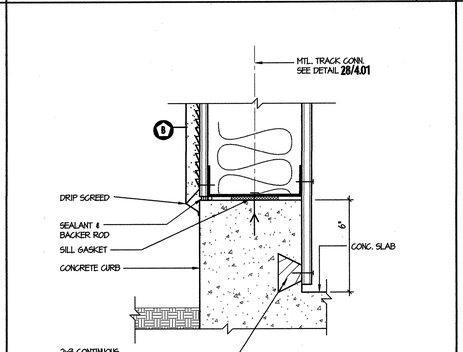

EXTERIOR CURB DETAIL

SCALE: 3" = 1'-0" | 12

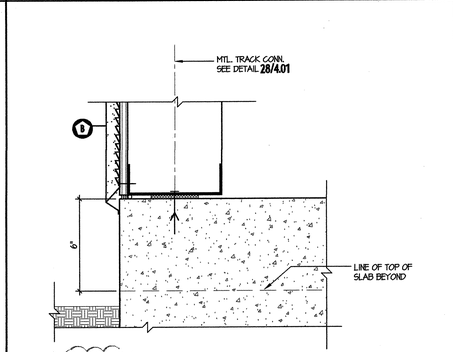

CURB @ ISOLATED COLUMN

SCALE: 3" = 1'-0" | 13

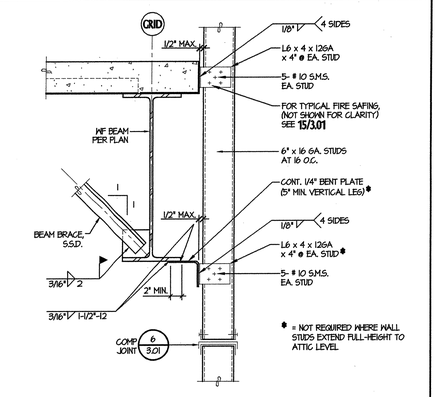

EXTERIOR WALL FRAMING CONNECTION

SCALE: 1" = 1'-0" | 14

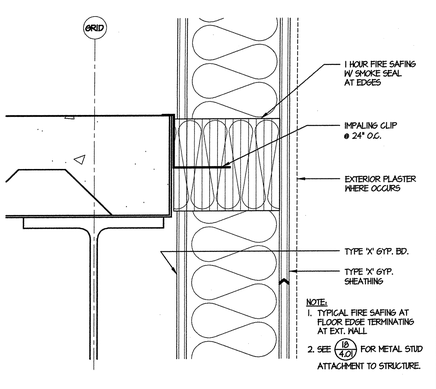

TYPICAL FIRE SAFING DETAIL

SCALE: 3" = 1'-0" | 15

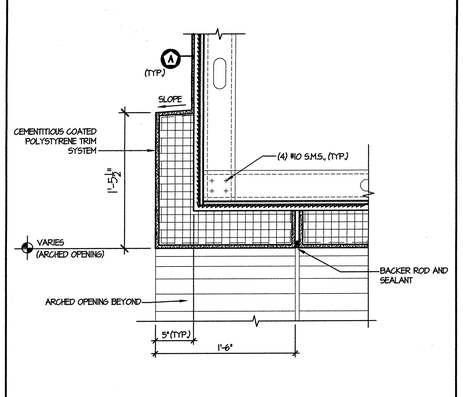

ARCHED OPENING

SCALE: 1-1/2" = 1'-0" | 16

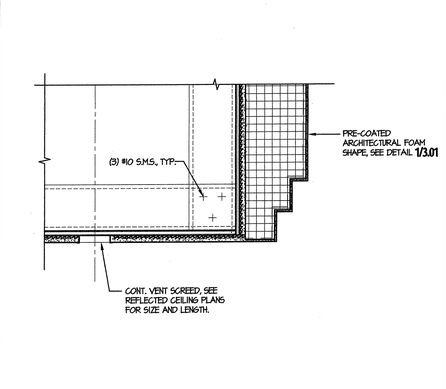

SOFFIT EDGE

SCALE: 1-1/2" = 1'-0" | 17

IF ACCURATELY DETERMINED TO BE LESS THAN 100.00 (25.4m)

tBP
architecture
planning
interiors
management

tBP/Architecture
1000 Burnett Ave, Suite 140
Concord, CA 94520
ph: 925.246.6419 fx: 925.246.6495

architect

consultant

APPROVED
DEPARTMENT OF THE STATE ARCHITECT
OFFICE OF REGULATION SERVICES
APPL. NO. 10219
BY
DATE 4-26-05

agency

SAN RAMON VALLEY CENTER

CONTRA COSTA COMMUNITY COLLEGE DISTRICT

SAN RAMON, CALIFORNIA

owner

tBP project number : 20212.00

file name: D11-0301.dwg

drawn by: checked by:

date: 03-01-04 plot scale: 1:1

Rev:	date:	description:
1	03-29-04	DESIGN CLARIFICATIONS

drawing title: EXTERIOR DETAILS

building no.:

drawing no.: 3.01

drawing of

METAL STUD NOTES 1

SCALE: NONE

1. ONE HOUR FIRE RESISTIVE CONSTRUCTION FOR INTERIOR PARTITIONS, AS NOTED ON PLANS, SEE WALL TYPE LEGEND, SHEET T-1 AND FLOOR PLANS.
2. ALL GYPSUM WALL BOARD TO BE ⅝" THICK, AND TYPE "X" WHERE REQUIRED FOR FIRE RESISTANT RATED ASSEMBLIES.
3. ALL INTERIOR PARTITIONS TO RECEIVE SOUND BATT INSULATION.
4. ALL STUDS SHALL CONFORM TO A.S.T.M. A446, A568, A570 AND A611 WITH MINIMUM YIELD POINT OF 33,000 P.S.I.
5. PROVIDE 14 GA. (MIN) METAL STUDS WHERE LIGHT WEIGHT EQUIPMENT OR FIXTURES INCLUDING CABINETS ARE ATTACHED TO STUD WALL. SEE DETAIL 23/4.01
6. ALL STUDS TO BE PLACED AT 16" O.C. (U.N.O.)
7. ALL METAL STUDS SHALL BE BY METAL STUD MANUFACTURERES ASSOCIATION, ICBO NO. 4943-P OR EQUAL.
8. ALL EXTERIOR STUDS SHALL BE 6" x 16 GA. @16" O.C. (U.N.O.) AND ALL INTERIOR STUDS SHALL BE 4"x16 GA. @ 16" O.C. (U.N.O.)
9. USE WELDED METAL STUDS FOR ALL EXTERIOR CONDITIONS.
10. SEE SHEET 4.01 AND 4.02 FOR ADDITIONAL METAL STUD DETAILS.
11. X-DNI PINS SHALL BE BY HILTI, ICBO NO. 2388.
12. ALL STUDS AT BRACE FRAMES TO BE 10" U.O.N.

METAL STUD SCHEDULE 2

SCALE: NONE

NOMINAL SIZE	CATALOG SIZE	MINIMUM PROPERTIES	
		I x In⁴	s x In³
4" x 18 GA.	400S137-43	0.716	0.362
4" x 16 GA.	400S137-54	0.953	0.477
4" x 14 GA.	400S137-68	1.165	0.582
6" x 18 GA.	600S137-43	2.042	0.670
6" x 16 GA.	600S137-54	2.518	0.839
6" x 14 GA.	600S137-68	3.044	1.031

FASTENER SCHEDULE 3

SCALE: NONE

STRUCTURAL DECK FASTENERS

DECK TYPE	FASTENERS	
	TRACK TO DECK OR TRACK TO STRAP	STRAP TO DECK
DECK WITH STRUCT. CONC. FILL	2- X-DNI PINS *	X-DNI PIN EACH FLUTE *
DECK WITH OR INSULATING CONC. / DECK WITHOUT ANY FILL	2- #10 SCREWS	#10 SCREWS EACH FLUTE

* 1½" MIN. EMBEDMENT FOR OVERHEAD APPLICATION INTO CONCRETE, OTHERWISE 1" MINIMUM EMBEDMENT.

STRUCTURAL LIGHT WEIGHT CONCRETE FASTENERS

DESCRIPTION	FASTENER TYPE	SHANK DIA. (IN)	MIN. EMBED. (IN)	FASTENERS INSTALLED IN CONC.			FASTENER INSTALLED IN METAL DECK		
				TENSION	SHEAR	LOWER FLUTE	TENSION UPPER FLUTE		SHEAR
DOME-HEAD NAIL	X-DNI	0.145	1	93	106	51	93		110
			1-1/2	157	140	110	157		230

1. THE ALLOWABLE SHEAR AND TENSION VALUES ARE FOR FASTENERS ONLY. WOOD AND STEEL MEMBER CONNECTED MUST BE INVESTIGATED IN ACCORDANCE WITH ACCEPTED DESIGN CRITERIA.
2. DECK MUST BE A MINIMUM NO. 16 GAGE (0.0359-INCH BARE STEEL)
3. LOWER FLUTE WIDTH MUST BE AT LEAST 4½".

ALLOWABLE WORKING VALUES FOR CEILING CLIP ASSEMBLIES

FASTENER TYPE	SHANK DIA. (IN)	MIN. EMBED. (IN)	NORMAL WEIGHT CONCRETE						3000 PSI LIGHTWEIGHT CONC. OVER METAL DECK					
			4000 PSI			6000 PSI			LOWER FLUTE			UPPER FLUTE		SHEAR
			TENSION	45°	SHEAR	TENSION	45°	SHEAR	TENSION	45°	TENSION	45°		
CCZTDNIZTP8T	0.145	15/16"	85	105	140	-	-	-	34	46	63	76		140

1. FASTENERS SHALL NOT BE DRIVEN UNTIL THE CONCRETE HAS REACHED THE DESIGNED ULTIMATE COMPRESSIVE STRENGTH.
2. DECK MUST BE A MINIMUM NO. 16 GAGE (0.0359-INCH BARE STEEL)
3. CONCRETE MATERIAL THICKNESS AT THE POINT OF PENETRATION MUST BE THREE TIMES THE FASTENER PENETRATION.
4. LOWER FLUTE WIDTH MUST BE AT LEAST 4½".

METAL STUD BRACING 4

SCALE: NONE

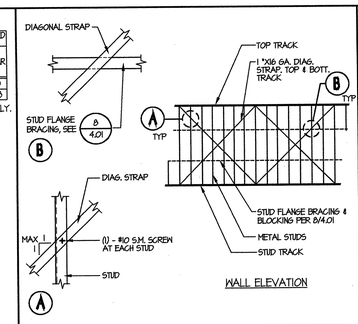

WALL ELEVATION

TYPICAL METAL STUD PARTITION ELEVATIONS 6

SCALE: NONE

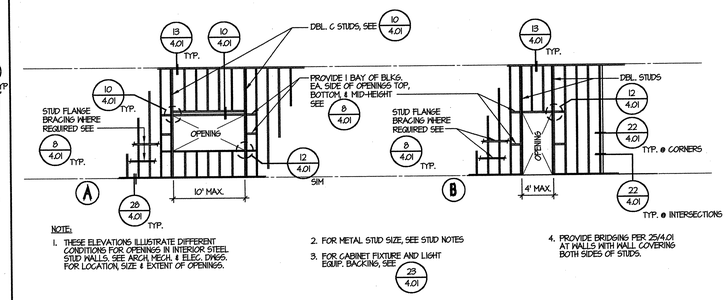

NOTE:
1. THESE ELEVATIONS ILLUSTRATE DIFFERENT CONDITIONS FOR OPENINGS IN INTERIOR STEEL STUD WALLS. SEE ARCH'L MECH. & ELEC. DWGS. FOR LOCATION, SIZE & EXTENT OF OPENINGS.
2. FOR METAL STUD SIZE, SEE STUD NOTES
3. FOR CABINET FIXTURE AND LIGHT EQUIP. BACKING, SEE 23/4.01
4. PROVIDE BRIDGING PER 25/4.01 AT WALLS WITH WALL COVERING BOTH SIDES OF STUDS.

TYPICAL METAL STUD FLANGE BRACING 8

SCALE: NONE

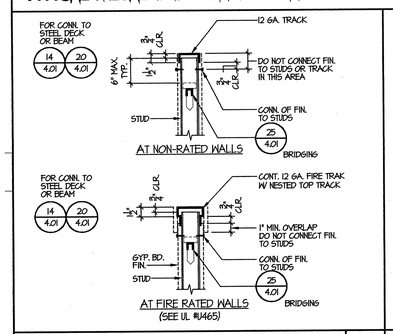

HEADER DETAIL (FOR SPANS > 4') 10

SCALE: NONE

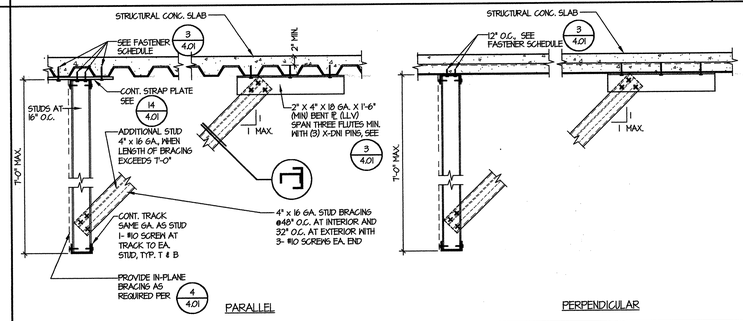

METAL TRACK HEAD DETAIL (SILL SIMILAR) (FOR SPANS < 4') 12

SCALE: NONE

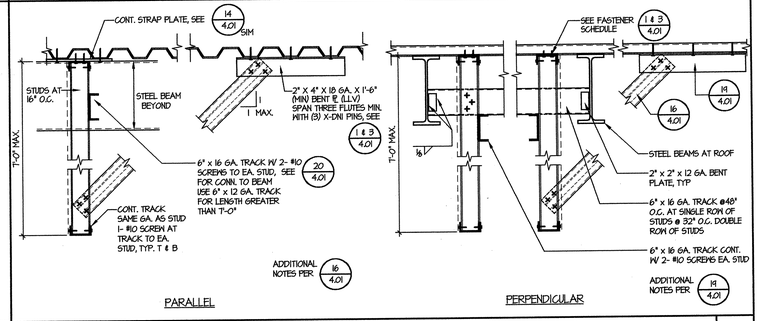

TOP CONNECTION 13

SCALE: NONE

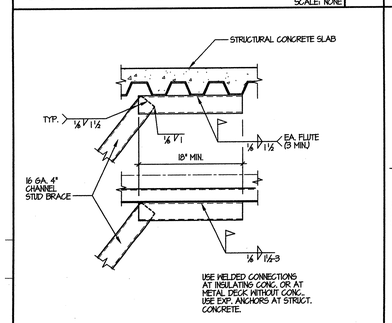

METAL STUDS TO METAL DECK 14

SCALE: NONE

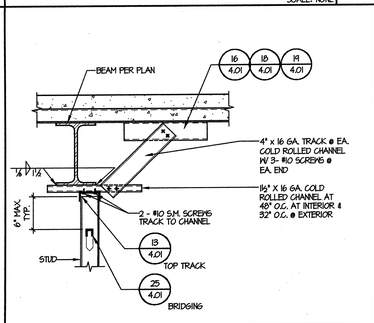

SUSPENDED STUDS AT STRUCTURAL CONCRETE FILLED METAL DECK 16

SCALE: NONE

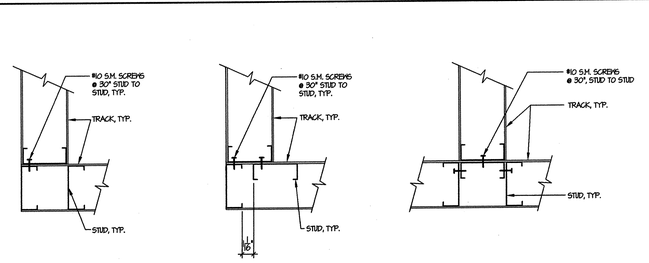

SUSPENDED STUDS AT METAL ROOF DECK 18

SCALE: NONE

ALTERNATE BRACE DETAIL 19

SCALE: NONE

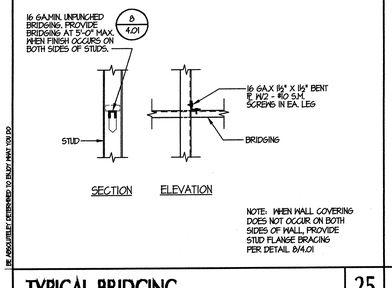

STUDS TO BOTTOM FLANGE OF BEAM 20

SCALE: NONE

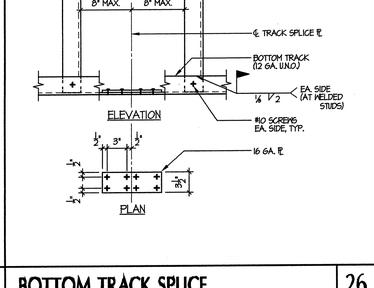

TYPICAL CORNER AND INTERSECTION CONNECTIONS 22

SCALE: NONE

23

SCALE: NONE

TYPICAL WALL HUNG COUNTER 24

SCALE: NONE

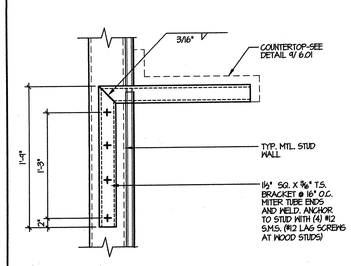

TYPICAL BRIDGING 25

SCALE: NONE

BOTTOM TRACK SPLICE 26

SCALE: NONE

LOW-WALL SUPPORT DETAIL 27

SCALE: NONE

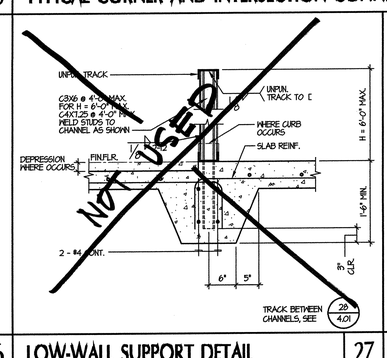

NON-BEARING METAL STUD PARTITION 28

SCALE: NONE

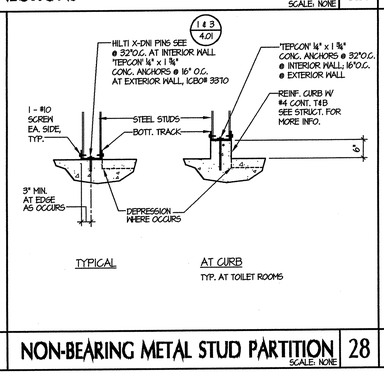

HUNG METAL STUD DETAIL 29

SCALE: NONE

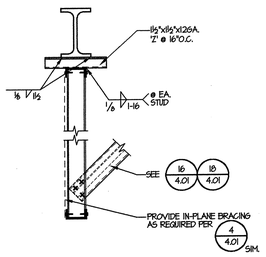

tBP architecture planning interiors management

tBP/Architecture
1000 Burnett Ave, Suite 140
Concord, CA 94520
ph. 925.246.6419 fx. 925.246.6495

architect

consultant

agency

owner

SAN RAMON VALLEY CENTER

CONTRA COSTA COMMUNITY COLLEGE DISTRICT

SAN RAMON, CALIFORNIA

tBP project number : 2012.00

file name: DTL-04.01.DWG

drawn by: checked by:

date: 03-01-04 plot scale: 1:1

Rev.	date:	description:

drawing title: building no:

TYPICAL METAL STUD DETAILS

drawing no: 4.01

drawing of

IF ABSOLUTELY DETERMINED TO BE LESS THAN 11X17

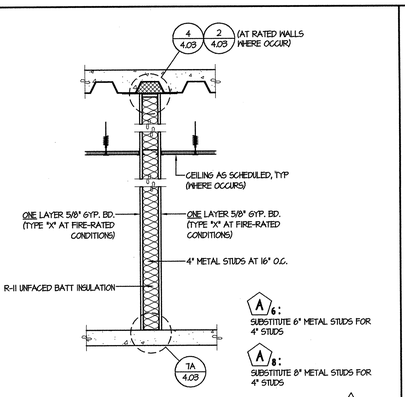

PARTITION — SCALE: 3/4" = 1'-0" — A

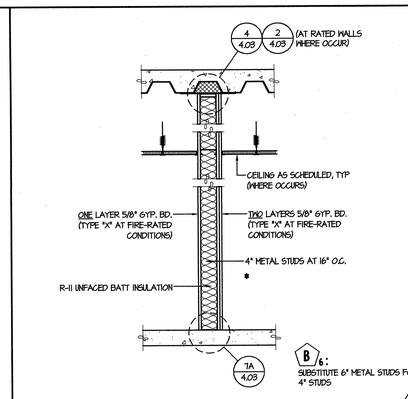

PARTITION — SCALE: 3/4" = 1'-0" — B

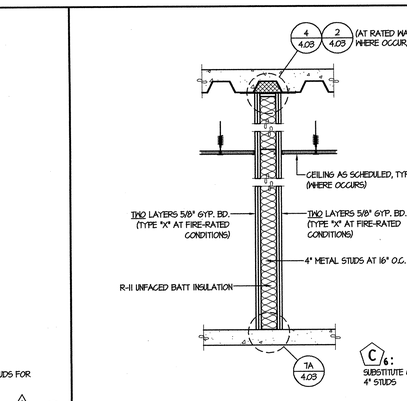

PARTITION — * 8" METAL STUDS AT 16" O.C. AT A/6 — SCALE: 3/4" = 1'-0" — C

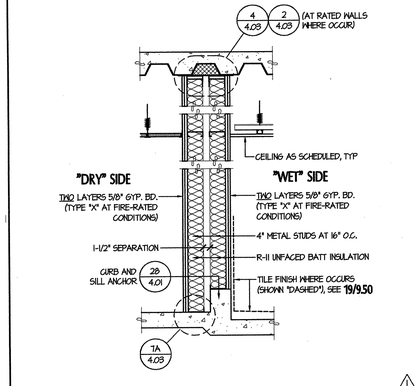

PARTITION AT TOILET ROOM — SCALE: 3/4" = 1'-0" — D1

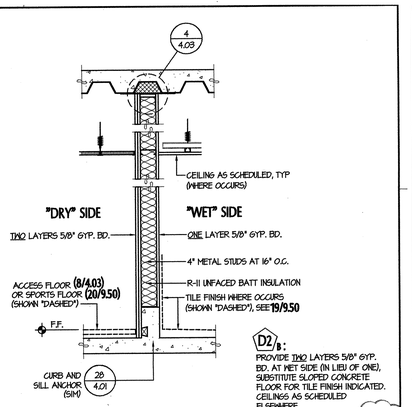

PARTITION — SCALE: 3/4" = 1'-0" — D2

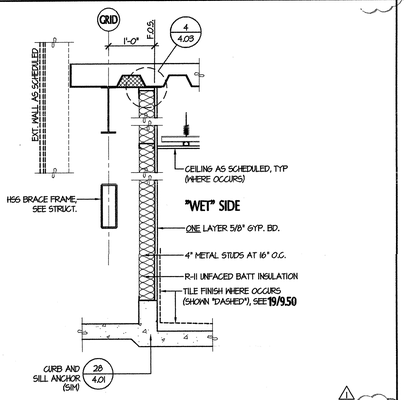

TOILET RM. PARTITION ADJACENT TO EXTERIOR — SCALE: 3/4" = 1'-0" — E1

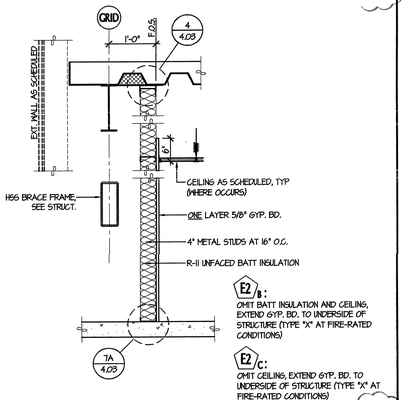

PARTITION ADJACENT TO EXTERIOR — SCALE: 3/4" = 1'-0" — E2

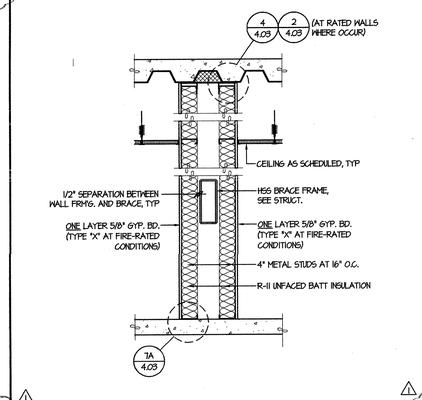

PARTITION AT BRACE FRAME — SCALE: 3/4" = 1'-0" — F1

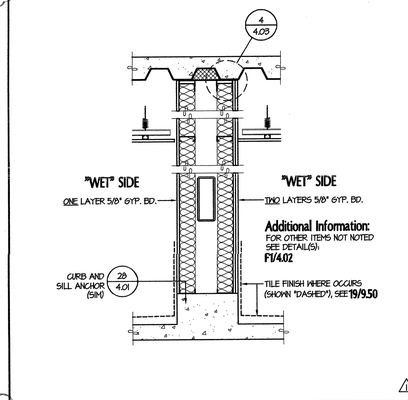

PARTITION AT BRACE FRAME — SCALE: 3/4" = 1'-0" — F2

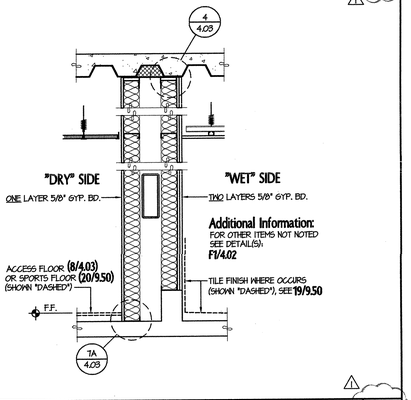

PARTITION AT BRACE FRAME — SCALE: 3/4" = 1'-0" — F3

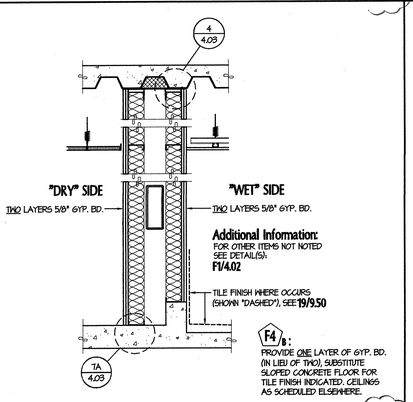

PARTITION AT BRACE FRAME — SCALE: 3/4" = 1'-0" — F4

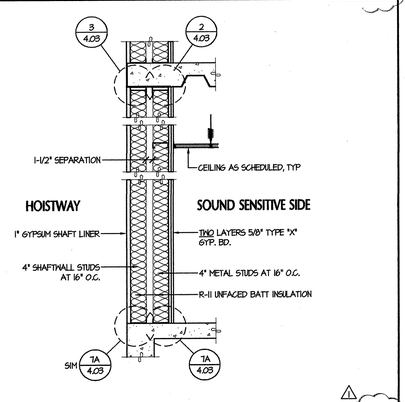

1-HR. RATED SHAFTWALL / SOUND WALL — SCALE: 3/4" = 1'-0" — G

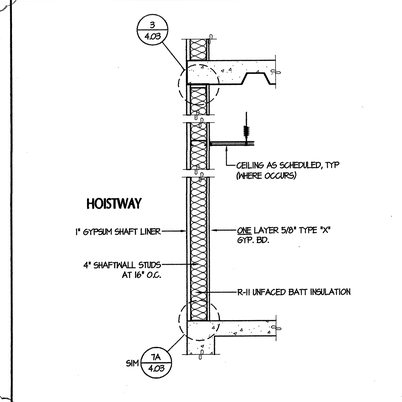

1-HR RATED SHAFTWALL — SCALE: 3/4" = 1'-0" — S

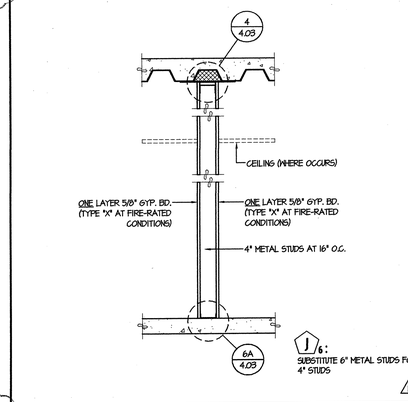

PARTITION — SCALE: 3/4" = 1'-0" — J

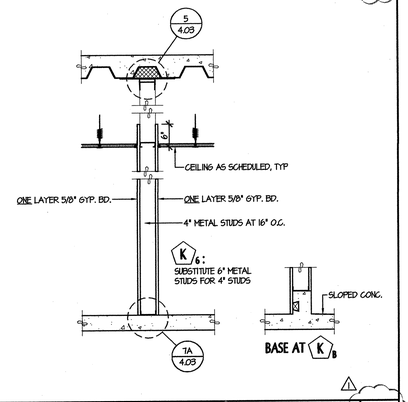

PARTITION — SCALE: 3/4" = 1'-0" — K

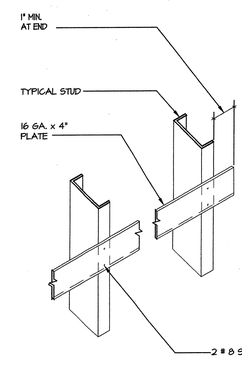

NOTES:

1. USE FOR MISC. ITEMS (E.G. SURFACE MOUNTED MIRROR, WASTE RECEPTACLE, TOWEL DISPENSERS, WALL MOUNTED DOOR STOP, ETC. MAX. WT. 50LB. POINT LOAD.
2. VERIFY LENGTH, HEIGHT, LOCATION OF BACKING PLATE & NUMBER REQUIRED WITH ACCESSORY MANUFACTURERS.
3. USE # 12 SELF TAPPING SCREWS MIN. WHEN ATTACHING ITEM TO BACKING.

BACKING PLATE - TYPE"A" (50 LBS.) — SCALE: 3/4" = 1'-0" — 16

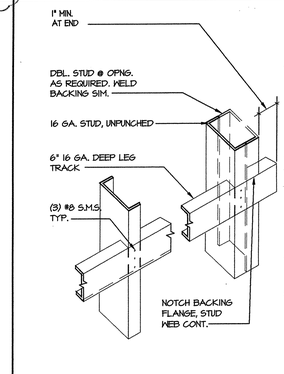

NOTES:

1. USE FOR UPPER WALL HUNG CABINETS, FULL HEIGHT CABINETS, HANDRAILS, WALL HUNG EQUIPMENT ETC. MAX. HT. 200 LBS./ LIN.FT.
2. LENGTH, HEIGHT AND LOCATION TO SUIT ITEMS BEING FASTENED SEE ANCHORAGE DETAIL OF SPECIFIC ITEMS FOR ADDITIONAL INFORMATION.
3. ATTACH TO THREE STUDS MIN. (DBL. STUD COUNTS AS ONE STUD)
4. USE # 12 SELF TAPPING SCREWS MIN. WHEN ATTACHING ITEMS.
5. USE DBL. STUDS WHEN STUD IS SUPPORTING MORE THAN (2) BACKING PLATES.

BACKING PLATE - TYPE"B" (200 LBS.) — SCALE: 3/4" = 1'-0" — 17

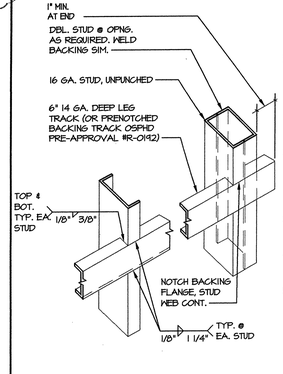

NOTES:

1. USE FOR UPPER WALL HUNG CABINETS, FULL HEIGHT CABINETS, HANDRAILS, WALL HUNG EQUIPMENT ETC. MAX. HT. 300 LBS./ LIN. FT.
2. LENGTH, HEIGHT AND LOCATION TO SUIT ITEMS BEING FASTENED SEE ANCHORAGE DETAIL OF SPECIFIC ITEMS FOR ADDITIONAL INFORMATION.
3. ATTACH TO THREE STUDS MIN. (DBL. SUTD COUNTS AS ONE STUD)
4. USE # 12 SELF TAPPING SCREWS MIN. WHEN ATTACHING ITEMS.
5. USE DBL. STUDS WHEN STUD IS SUPPORTING MORE THAN (2) BACKING PLATES.

BACKING PLATE - TYPE "C" (300 LBS.) — SCALE: 3/4" = 1'-0" — 18

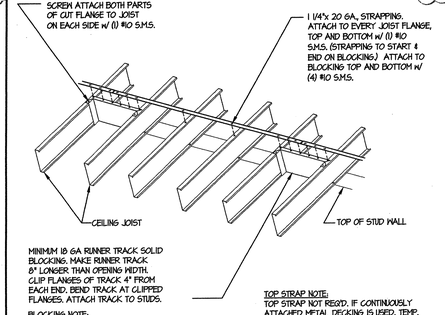

MINIMUM 18 GA RUNNER TRACK SOLID BLOCKING. MAKE RUNNER TRACK 8" LONGER THAN OPENING WIDTH. CLIP FLANGES OF TRACK 4" FROM EACH END. BEND TRACK AT CLIPPED FLANGES. ATTACH TRACK TO STUDS.

BLOCKING NOTE: PLACE SOLID BLOCKING AT EACH END OF CEILING SYSTEM, AND AT 4'-0"o.c. MAX.

TOP STRAP NOTE: TOP STRAP NOT REQ'D. IF CONTINUOUSLY ATTACHED METAL DECKING IS USED. TEMP. BRACING OF TOP FLANGE DURING CONSTRUCTION MAY BE REQ'D.

JOIST BLOCKING — SCALE: 3/4" = 1'-0" — 19

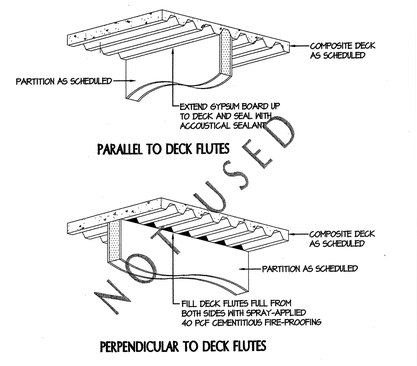

FULL HEIGHT ACCOUSTICAL PARTITION HEADS — SCALE: NONE — 20

RE: ABSOLUTELY CERTIFIED TO PLOT MAY 1/03 DO (03-04-04)

tBP architecture planning interiors management
1000 Burnett Ave, Suite 140
Concord, CA 94520
ph: 925.246.6419 fx: 925.246.6495
architect

consultant

APPROVED BY: DEPARTMENTAL STAMP DIVISION OF STATE ARCHITECT OFFICE OF REGULATION SERVICES
ACCESSIBILITY REVIEW
APPROVED
DATE: 6-7-04
agency

SAN RAMON VALLEY CENTER
CONTRA COSTA COMMUNITY COLLEGE DISTRICT
SAN RAMON, CALIFORNIA

owner

tBP project number : 20212.00
file name: D1\-0402_wall types.dwg
drawn by: MM checked by:
date: 03-04-04 plot scale: 1:1

Rev:	date:	description:
1	03-24-04	DESIGN CLARIFICATIONS

drawing title: INTERIOR PARTITIONS & MISC. DETAILS
building no:
drawing no: 4.02
drawing of

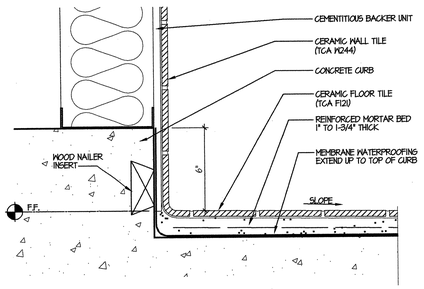

TILE @ TOILET

SCALE: 3" = 1'-0" | 1

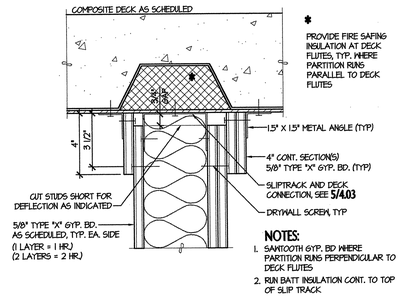

EQUIVALENT U.L. DES No. 2079

HEAD DETAIL: FIRE RATED PARTITION

SCALE: 3" = 1'-0" | 2

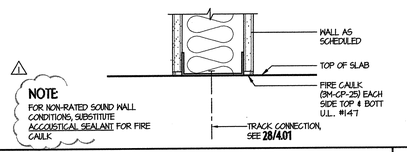

BASE DETAIL: 1HR RATED PARTITION

SCALE: 3" = 1'-0" | 7A

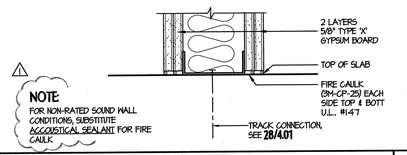

BASE DETAIL: 2HR RATED PARTITION

SCALE: 3" = 1'-0" | 7B

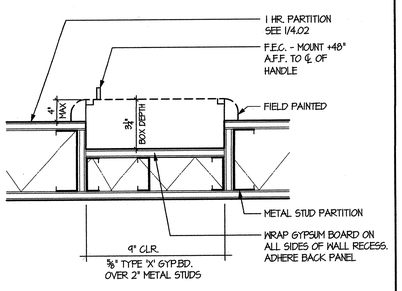

FIRE EXTINGUISHER CABINET

SCALE: 3" = 1'-0" | 11

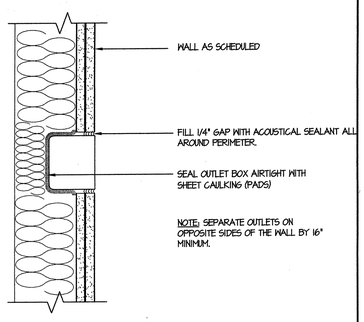

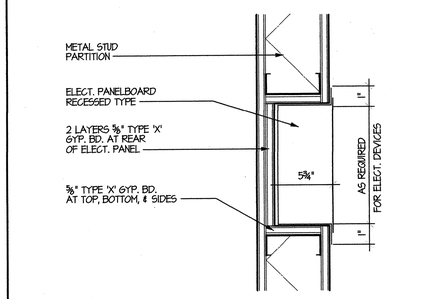

ELECTRICAL PANEL DETAIL

SCALE: 3" = 1'-0" | 12

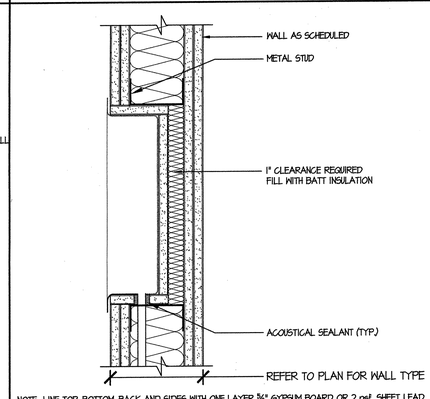

RECESSED PANELS & FIXT. @ SOUND-RATED WALL

SCALE: 3" = 1'-0" | 17

EQUIVALENT U.L. DES No. 2079

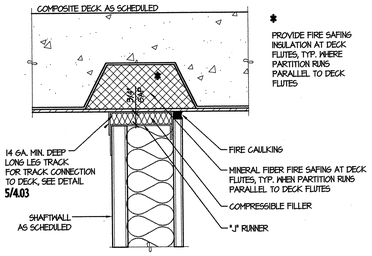

HEAD DETAIL: SHAFTWALL

SCALE: 3" = 1'-0" | 3

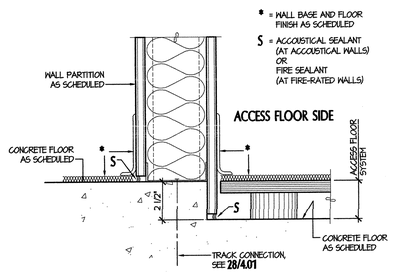

ACCESS FLOOR TO WALL

SCALE: 3" = 1'-0" | 8

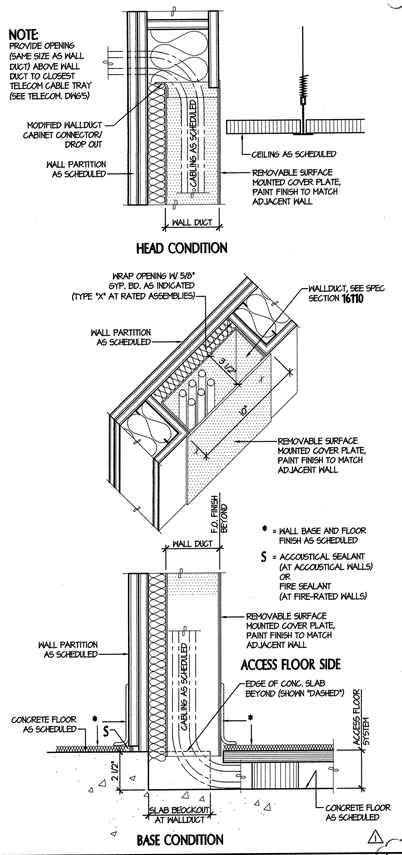

WALL ACCESS DUCT

SCALE: 3" = 1'-0" | 18

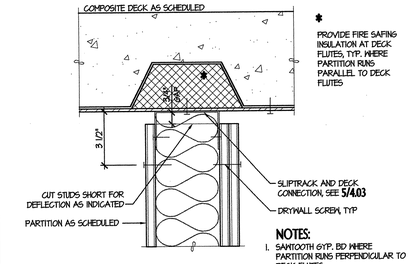

HEAD DETAIL: NON-RATED PARTITION

SCALE: 3" = 1'-0" | 4

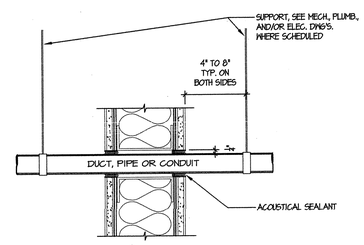

TYP. THRU SOUND RATED CONST.

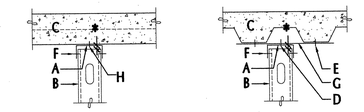

SLIP TRACK DETAIL

SCALE: 1" = 1'-0" | 5

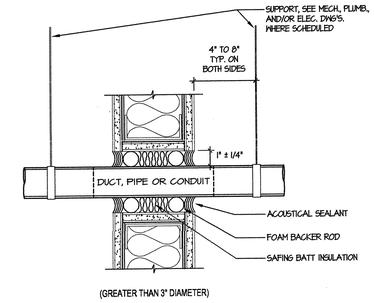

TYP. THRU SOUND RATED CONST.

PIPE, DUCT & PIPE PENETRATION

SCALE: 3" = 1'-0" | 9

PIPE, DUCT & PIPE PENETRATION

SCALE: 3" = 1'-0" | 10

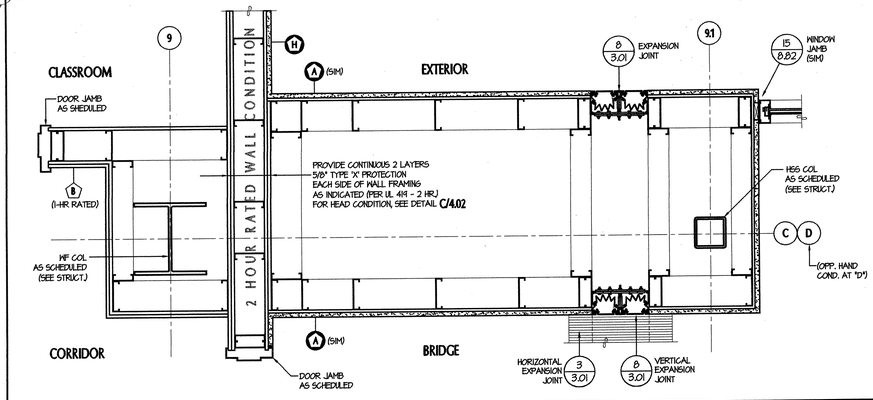

RATED WALL ASSEMBLY DETAIL

SCALE: 1" = 1'-0" | 15

OUTLET TREATMENT @ ACOUSTICAL WALL

SCALE: 3" = 1'-0" | 16

BE ACCURATELY CENTERED TO BACK WALL STUD OR BLOCK

tBP
architecture
planning
interiors
management
LICENSED ARCHITECT TIMOTHEUS BRUCE PAGE RENEWAL 08/31/2005 No. 24886 STATE OF CALIFORNIA
tBP/architecture
1000 Burnett Ave, Suite 140
Concord, CA 94520
ph: 925.246.6495 fx: 925.246.6419

architect

consultant

agency

APPROVED
APPROVING STAMP
DIV. OF THE STATE ARCHITECT
OFFICE OF REGULATION SERVICES
APPL. NO. 02-119
BY: T.B. PAGE
DATE: 2-9-04

SAN RAMON VALLEY CENTER
CONTRA COSTA COMMUNITY COLLEGE DISTRICT
SAN RAMON, CALIFORNIA

owner

tBP project number : 20212.00
file name: D11-0403.dwg
drawn by: checked by:
date: 03-04-04 plot scale: 1:1

Rev.	date:	description:
1	03-24-04	DESIGN CLARIFICATIONS

drawing title: building no.:
TYPICAL PARTITION DETAILS
drawing no.:
4.03
drawing of

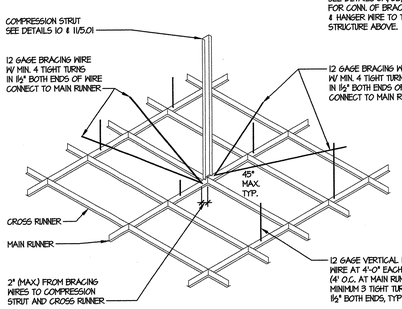

SUSPENDED CEILING BRACING SYSTEM

SCALE: N.T.S. 1

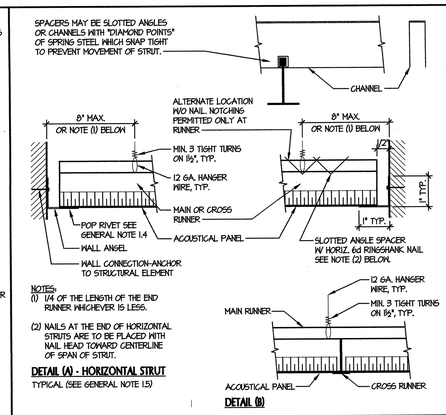

DETAIL (A) - HORIZONTAL STRUT
TYPICAL (SEE GENERAL NOTE 1.5)

DETAIL (B)

HANGER WIRE CONNECTION TO GRID

SCALE: N.T.S. 2

NOT USED

SCALE: N.T.S. 3A

NOT USED

SCALE: N.T.S. 3B

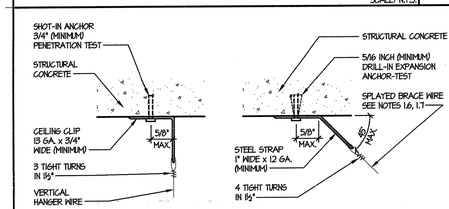

(A) - VERTICAL HANGER WIRE CLIP ATTACHMENT **(B) - SPLAYED BRACING WIRE CLIP ATTACHMENT**

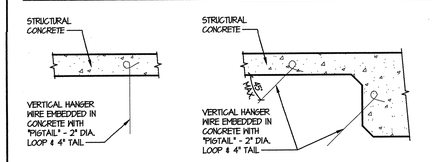

(C) - HANGER WIRE AT CIP. CONCRETE **(D) - BRACE WIRE AT CIP. CONCRETE**

WIRE CONNECTIONS TO CONCRETE

SCALE: N.T.S. 4

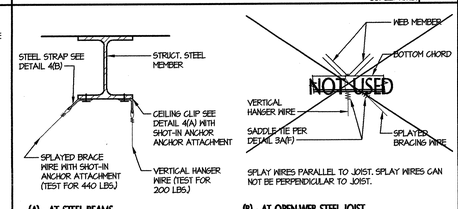

(A) - AT STEEL BEAMS

SPLAY WIRES PARALLEL TO JOIST. SPLAY WIRES CAN NOT BE PERPENDICULAR TO JOIST.

(B) - AT OPEN-WEB STEEL JOIST

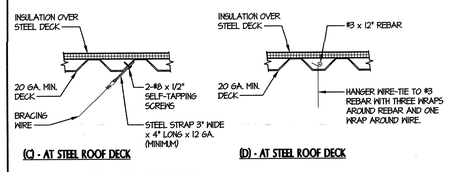

(C) - AT STEEL ROOF DECK **(D) - AT STEEL ROOF DECK**

NOTE: IF SELF-TAPPING SCREWS ARE USED WITH CONCRETE FILL, SET SCREWS BEFORE PLACING CONCRETE.

WIRE CONNECTIONS TO STEEL FRAMING

SCALE: N.T.S. 5

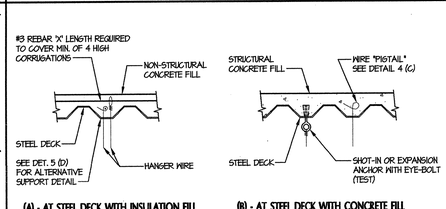

(A) - AT STEEL DECK WITH INSULATION FILL **(B) - AT STEEL DECK WITH CONCRETE FILL**

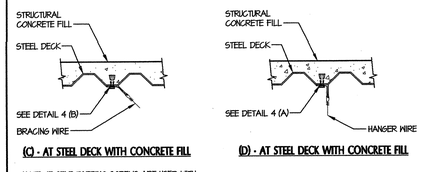

(C) - AT STEEL DECK WITH CONCRETE FILL **(D) - AT STEEL DECK WITH CONCRETE FILL**

NOTE: IF SELF-TAPPING SCREWS ARE USED WITH CONCRETE FILL, SET SCREWS BEFORE PLACING CONCRETE.

WIRE CONNECTIONS TO STEEL FRAMING

SCALE: N.T.S. 6

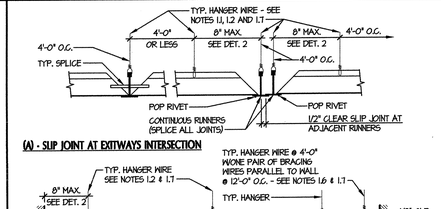

(A) - SLIP JOINT AT EXITWAYS INTERSECTION

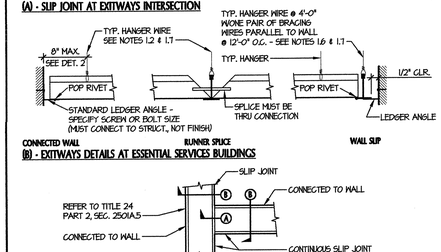

(B) - EXITWAYS DETAILS AT ESSENTIAL SERVICES BUILDINGS

PLAN VIEW

LOCATION OF SLIP JOINTS IN ESB EXITWAYS

SCALE: N.T.S. 7

GENERAL NOTES

1. CEILING NOTES. THE FOLLOWING NOTES WILL BE USED IN PLANS AND SPECIFICATIONS FOR CEILING SYSTEMS WHOSE TOTAL WEIGHT, INCLUDING AIR CONDITIONING GRILLES AND LIGHT FIXTURES, DOES NOT EXCEED FOUR (4) PSF. HEAVIER SYSTEMS AND THOSE SUPPORTING LATERAL LOADS FROM PARTITIONS, WILL REQUIRE SPECIAL DESIGN DETAILS.

1.1 12 GA. (MIN.) HANGER WIRES MAY BE USED FOR UP TO AND INCLUDING 4'-0"x4'-0" GRID SPACING AND SHALL BE ATTACHED TO MAIN RUNNERS.

1.2 PROVIDE 12 GA. HANGER WIRES AT THE ENDS OF ALL MAIN AND CROSS RUNNERS WITHIN EIGHT INCHES (8") OF THE SUPPORT OR WITHIN ONE-FOURTH (1/4) OF THE LENGTH OF THE END TEE, WHICHEVER IS LEAST, FOR THE PERIMETER OF THE CEILING AREA. END CONNECTIONS FOR RUNNERS WHICH ARE DESIGNED AND DETAILED TO RESIST THE APPLIED VERTICAL AND HORIZONTAL FORCES MAY BE USED IN LIEU OF THE 12 GA. HANGER WIRES, SUBJECT TO DIVISION ON THE STATE ARCHITECT (DSA) REVIEW AND APPROVAL.

1.3 PROVIDE TRAPEZE OR OTHER SUPPLEMENTARY SUPPORT MEMBERS AT OBSTRUCTIONS TO TYPICAL HANGER SPACING. PROVIDE ADDITIONAL HANGERS, STRUTS OR BRACES AS REQUIRED AT ALL CEILING BREAKS, SOFFITS OR DISCONTINUOUS AREAS. HANGER WIRES THAT ARE MORE THAN 1 IN 6 OUT OF PLUMB ARE TO HAVE COUNTER SLOPING WIRES.

1.4 CEILING GRID MEMBERS MAY BE ATTACHED TO NOT MORE THAN TWO (2) ADJACENT WALLS. CEILING GRID MEMBERS SHALL BE AT LEAST 1/2" FREE OF OTHER WALLS. IF WALLS RUN DIAGONALLY TO CEILING GRID SYSTEM RUNNERS, ONE END OF MAIN AND CROSS RUNNERS SHOULD BE FREE, AND A MINIMUM OF 1/2" CLEAR OF WALL.

1.5 AT THE PERIMETER OF THE CEILING AREA WHERE MAIN OR CROSS RUNNERS ARE NOT CONNECTED TO THE ADJACENT WALL, PROVIDE INTERCONNECTION BETWEEN THE RUNNERS AT THE FREE END TO PREVENT LATERAL SPREADING. A METAL STRIP OR A 16 GA. WIRE WITH A POSITIVE MECHANICAL CONNECTION TO THE RUNNERS MAY BE USED. WHERE THE PERPENDICULAR DISTANCE FROM THE WALL TO THE FIRST PARALLEL RUNNER IS 12" OR LESS, TO INTERLOCK IS NOT REQUIRED.

1.6 PROVIDE BRACING ASSEMBLIES CONSISTING OF A COMPRESSION STRUT AND FOUR (4) 12 GA. SPLAYED BRACING WIRES ORIENTED 90 DEGREES FROM EACH OTHER (SEE DETAIL 1) AT THE FOLLOWING SPACING:

1. FOR SCHOOL BUILDINGS, PLACE BRACING ASSEMBLIES AT A SPACING NOT MORE THAN 12' BY 12' ON CENTER.
2. FOR ESSENTIAL SERVICES BUILDING, PLACE BRACING ASSEMBLIES NOT MORE THAN 8' BY 12' ON CENTER.
3. PROVIDE BRACING ASSEMBLIES AT LOCATIONS NOT MORE THAN ONE HALF (1/2) THE SPACINGS GIVEN ABOVE, FROM EACH PERIMETER WALL AND AT EDGE OF VERTICAL CEILING OFFSETS. THE SLOPE OF THESE WIRES SHALL NOT EXCEED 45 DEGREES FROM THE PLANE OF THE CEILING AND SHALL BE TAUT. SPLICES IN BRACING WIRES ARE NOT PERMITTED WITHOUT SPECIAL DSA APPROVAL.
4. SUSPENDED ACOUSTICAL CEILING SYSTEMS WITH A CEILING AREA OF 144 SQUARE FEET OR LESS, AND FIRE RATED SUSPENDED ACOUSTICAL CEILING SYSTEMS WITH A CEILING AREA OF 96 SQUARE FEET OR LESS, SURROUNDED BY WALLS WHICH CONNECT DIRECTLY TO THE STRUCTURE ABOVE, DO NOT REQUIRE BRACING ASSEMBLIES WHEN ATTACHED TO TWO ADJACENT WALLS.

1.7 FASTEN HANGER WIRES WITH NOT LESS THAN THREE (3) TIGHT TURNS. FASTEN BRACING WIRES WITH FOUR (4) TIGHT TURNS. MAKE ALL TIGHT TURNS WITHIN A DISTANCE OF 1½" INCHES. HANGER OR BRACING WIRE ANCHORS TO THE STRUCTURE SHOULD BE INSTALLED IN SUCH A MANNER THAT DIRECTION OF THE WIRE ALIGNS AS CLOSELY AS POSSIBLE WITH THE DIRECTION OF THE FORCES ACTING ON THE WIRE.

NOTE: WIRE TURNS MADE BY MACHINE WHERE BOTH STRANDS HAVE BEEN DEFORMED OR BENT IN WRAPPING CAN WAIVE THE 1½" REQUIREMENT, BUT THE NUMBER OF TURNS SHOULD BE MAINTAINED, AND BE AS TIGHT AS POSSIBLE.

1.8 SEPARATE ALL CEILING HANGING AND BRACING WIRES AT LEAST SIX INCHES (6") FROM ALL UNBRACED DUCTS, PIPES, CONDUIT, ETC.. ATTACH LIGHTWEIGHT ITEMS, SUCH AS SINGLE ELECTRICAL CONDUIT NOT EXCEEDING 3/4" NOMINAL DIAMETER, TO HANGER WIRES USING CONNECTORS ACCEPTABLE TO DSA.

1.9 WHEN DRILLED-IN CONCRETE ANCHORS OR SHOT-IN ANCHORS ARE USED IN REINFORCED CONCRETE FOR HANGER WIRES, 1 OUT OF 10 MUST BE FIELD TESTED FOR 200 LBS. IN TENSION. WHEN DRILLED-IN CONCRETE ANCHORS ARE USED FOR BRACING WIRES, 1 OUT OF 2 MUST BE FIELD TESTED FOR 440 LBS. IN TENSION. SHOT-IN ANCHORS IN CONCRETE ARE NOT PERMITTED FOR BRACING WIRES. IF ANY SHOT-IN OR DRILLED-IN ANCHOR FAILS, SEE CBC, SECTION 1923A.3.5.

NOTE: DRILLED-IN OR SHOT-IN ANCHORS REQUIRE SPECIAL DSA APPROVAL WHEN USED IN PRESTRESSED CONCRETE.

1.10 ATTACH ALL LIGHT FIXTURES AND CEILING MOUNTED AIR TERMINALS OR SERVICES, TO THE CEILING GRID RUNNERS TO RESIST A HORIZONTAL FORCE EQUAL TO THE WEIGHT OF THE FIXTURES. SCREWS OR APPROVED FASTENERS ARE REQUIRED.

1.11 FLUSH OR RECESSED LIGHT FIXTURES AND AIR TERMINALS OR SERVICES, WEIGHING LESS THAN 56 LBS., MAY BE SUPPORTED DIRECTLY ON THE RUNNERS OF A HEAVY DUTY GRID SYSTEM BUT, IN ADDITION, THEY MUST HAVE A MINIMUM OF TWO 12 GA. SLACK SAFETY WIRES ATTACHED TO THE FIXTURE AT DIAGONAL CORNERS AND ANCHORED TO THE STRUCTURE ABOVE. ALL 4'x4' LIGHT FIXTURES MUST HAVE SLACK SAFETY WIRES AT EACH CORNER.

ALL FLUSH OR RECESSED LIGHT FIXTURES AND AIR TERMINALS OR SERVICES WEIGHING 56 LBS. OR MORE MUST BE INDEPENDENTLY SUPPORTED BY NOT LESS THAN FOUR (4) TAUT 12 GA. WIRES EACH ATTACHED TO THE FIXTURE AND TO THE STRUCTURE ABOVE REGARDLESS OF THE TYPE OF CEILING GRID SYSTEM USED.

THE FOUR (4) TAUT 12 GA. WIRES INCLUDING THEIR ATTACHMENT TO THE STRUCTURE ABOVE MUST BE CAPABLE OF SUPPORTING FOUR (4) TIME THE WEIGHT OF THE UNIT.

1.12 ALL FIXTURES AND AIR TERMINALS OR SERVICES SUPPORTED ON INTERMEDIATE DUTY GRID SYSTEMS MUST BE INDEPENDENTLY SUPPORTED BY NOT LESS THAN FOUR (4) TAUT 12 GA. WIRES EACH ATTACHED TO THE FIXTURE OR TERMINAL, AND TO THE STRUCTURE ABOVE.

1.13 SUPPORT SURFACE MOUNTED LIGHT FIXTURES BY AT LEAST TWO POSITIVE DEVICES WHICH SURROUND THE CEILING RUNNER AND WHICH ARE EACH SUPPORTED FROM THE STRUCTURE ABOVE BY A 12 GA. WIRE. SPRING CLIPS OR CLAMPS THAT CONNECT ONLY TO THE RUNNER ARE NOT ACCEPTABLE.

PROVIDE ADDITIONAL SUPPORTS WHEN LIGHT FIXTURES ARE 8'-0" OR LONGER.

1.14 SUPPORT PENDANT MOUNTED LIGHT FIXTURES DIRECTLY FROM THE STRUCTURE ABOVE WITH HANGER WIRES OR CABLES PASSING THROUGH EACH PENDANT HANGER AND CAPABLE OF SUPPORTING FOUR (4) TIMES THE WEIGHT OF THE FIXTURE. A BRACING ASSEMBLY PER DETAIL 1, IS REQUIRED WHERE THE PENDANT HANGER TO THE BRACING ASSEMBLY TO TRANSMIT HORIZONTAL FORCES.

1.15 CLASSIFICATION OF CEILING GRID IS HEAVY DUTY (AS SPECIFIED).

2. ADDITIONAL REQUIREMENTS FOR FIRE RATED CEILINGS.

2.1 PROVIDE UNDERWRITER LABORATORY (U.L.) DESIGN NUMBER OR STATE FIRE MARSHAL (SFM) LISTING NUMBER. THE COMPONENTS AND INSTALLATION DETAILS MUST CONFORM IN EVERY RESPECT WITH THE U.L. OR SFM APPROVAL FOR THE DESIGN NUMBER SPECIFIED. CUSTOM DESIGNS WHICH COMBINE COMPONENTS FROM DIFFERENT APPROVED DESIGNS BUT HAVE NOT BEEN TESTED AS A COMPLETE ASSEMBLY ARE NOT ACCEPTABLE.

2.2 FOR SCHOOLS AND ESSENTIAL SERVICES BUILDINGS, BRACING ASSEMBLIES ARE REQUIRED FOR EACH 144 SQUARE FEET. THE FIRST BRACING ASSEMBLY IS REQUIRED NOT MORE THAN FOUR FEET (4'-0") FROM EACH WALL. A MINIMUM OF ONE BRACING ASSEMBLY IS REQUIRED BETWEEN ANY TWO ADJACENT EXPANSION CUT-OUTS ON RUNNERS BEING BRACED.

2.3 POP RIVETS, SCREWS, OR OTHER ATTACHMENTS ARE NOT ACCEPTABLE UNLESS SPECIFICALLY DETAILED ON THE DRAWINGS AND APPROVED BY U.L. AND SFM.

3. ADDITIONAL REQUIREMENTS FOR METAL PANELS.
METAL PANELS AND PANELS WEIGHING MORE THAN 1/2 PSF, OTHER THAN ACOUSTICAL TILE, ARE TO BE POSITIVELY ATTACHED TO THE CEILING SUSPENSION RUNNERS.

4. (NOT USED)

5. REUSE OF EXISTING CEILING HANGER WIRES AND SPLAY WIRES.

5.1 THE GAGE AND SPACING OF THE WIRES MUST COMPLY WITH THE CURRENT APPLICABLE CODES.

5.2 ALL EXISTING CEILING HANGER WIRES MUST BE TESTED TO 200 LBS. IN TENSION.

5.3 ALL EXISTING SPLAYED BRACING WIRES MUST BE FIELD TESTED TO 440 LBS. IN TENSION.

5.4 IF A NEW WIRE IS TO BE SPLICED TO AN EXISTING WIRE, THE FOLLOWING IS REQUIRED:

1. THE ARCHITECT OR STRUCTURAL ENGINEER IN GENERAL RESPONSIBLE CHARGE MUST SUBMIT TO DSA A DETAIL AND SPECIFICATION DESCRIBING HOW THE SPLICE IS TO BE MADE.
2. ALL NEW WIRES, AFTER BEING SPLICED TO THE EXISTING WIRES, MUST BE FIELD TESTED PER ITEMS 5.2 AND 5.3 ABOVE.
3. ALL FIELD TESTS MUST BE PERFORMED IN THE PRESENCE OF THE PROJECT INSPECTOR.

6. LIST OF DSA PRODUCT APPROVALS FOR SUSPENDED ACOUSTICAL CEILING SYSTEM.

DSA PRODUCT APPROVAL NO.

PA-008 TECTUM I AND TECTUM II - FOAM BOARD, ACOUSTICAL BOARD AND SUSPENDED CEILING TILE.
PA-022 ARMSTRONG CASSETTES 800 SERIES METAL CEILING SYSTEM
PA-026 CHICAGO METALLIC SUSPENDED CEILING SYSTEM
PA-030 USG INTERIOR DONN SUSPENDED CEILING GRID SYSTEM
PA-041 ARMSTRONG WORLD INDUSTRIES SUSPENDED CEILING SYSTEM
PA-078 METALINE, PLANTOSILE AND MAGNA T-CELL SUSPENDED CEILING SYSTEMS

NOTE: ALTERNATE MANUFACTURERS AND SYSTEMS MAY BE SUBMITTED FOR REVIEW AND APPROVED BY THE DIVISION OF THE STATE ARCHITECT.

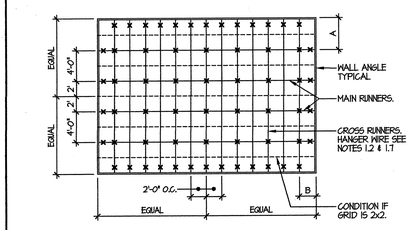

A = AT 1'/2" OR LESS TO ACCOMMODATE STANDARD GRID & CEILING BOARD.

B = 24" OR LESS TO ACCOMMODATE STANDARD CEILING BOARD.

NOTE: ALL COMPONENTS OF CEILING GRID TO BE CLASSIFIED "HEAVY DUTY"

SEE DETAILS 1, 2, 9.

TYPICAL SUPPORT PLAN

SCALE: N.T.S. 8

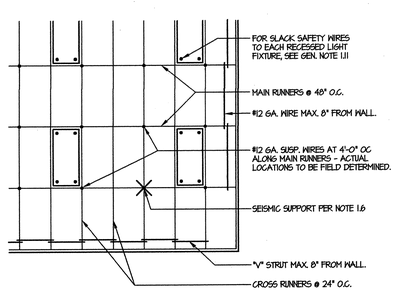

LATERAL BRACING PLAN

SCALE: N.T.S. 9

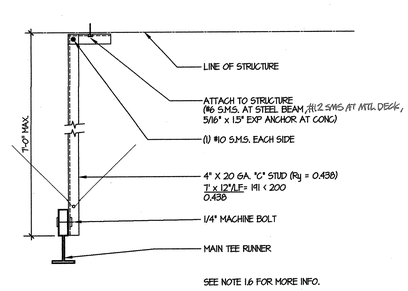

SEE NOTE 1.6 FOR MORE INFO.

COMPRESSION STRUT (7' MAX.)

SCALE: N.T.S. 10

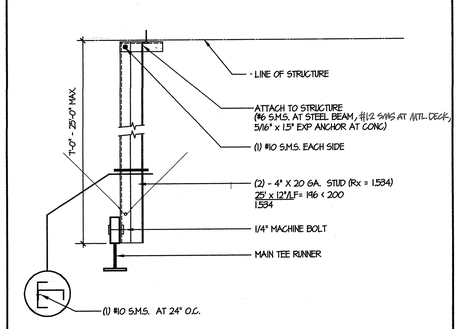

COMPRESSION POST, TYP. (7'-25' MAX.)

SCALE: NONE 11

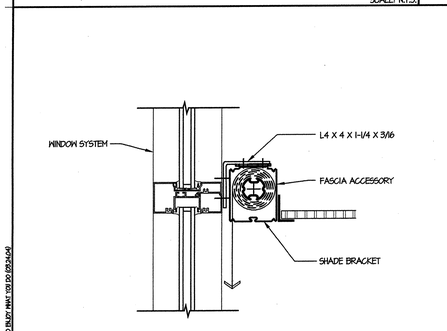

WINDOW SHADE

SCALE: 3" = 1'-0" 13

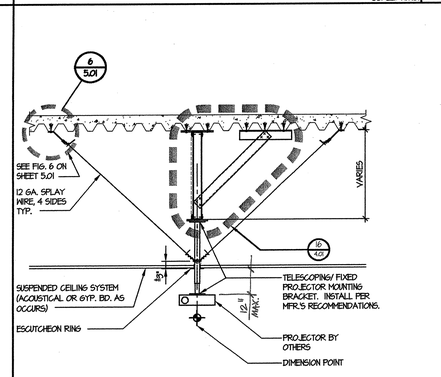

TYPICAL PROJECTOR MOUNTING DETAIL

SCALE: 1/2" = 1'-0" 14

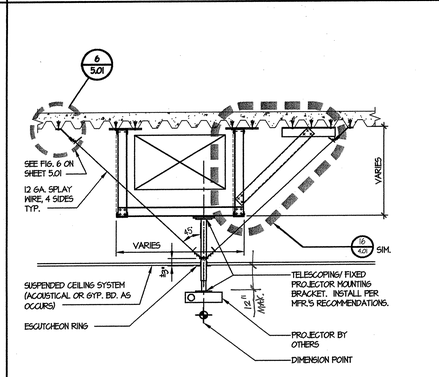

ALT. PROJECTOR MOUNTING AT OBSTRUCTION

SCALE: 1/2" = 1'-0" 15

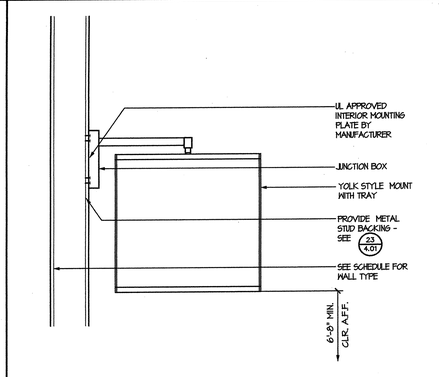

MONITOR WALL MOUNT

SCALE: 1" = 1'-0" 16

tBP
architecture
planning
interiors
management
LICENSED ARCHITECT RICHARD G. WIMMER C-14885 REGISTERED PROFESSIONAL ENGINEER STATE OF CALIFORNIA
tBP/Architecture
1000 Burnett Ave, Suite 140
Concord, CA 94520
ph. 9252466419 fx. 9252466495
architect

consultant

IDENTIFICATION STAMP DIV. OF THE STATE ARCHITECT OFFICE OF REGULATION SERVICES
APPL NO. 04-119
APP. 03 15 3
DATE

agency

SAN RAMON VALLEY CENTER

CONTRA COSTA COMMUNITY COLLEGE DISTRICT

SAN RAMON, CALIFORNIA

owner

tBP project number : 20212.00
file name: D11-0501.dwg
drawn by: checked by:
date: 03-09-04 plot scale: 1:1

Rev.	date:	description:

drawing title: building no:

TYPICAL ACOUSTICAL PANEL CEILING DETAILS

drawing no:

5.01

drawing of

DR. ABSOLUTELY DETERMINED TO PLOT AT 1:1 ON 610.0X914.4MM

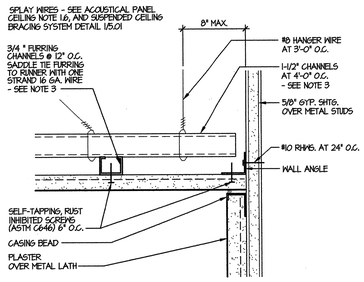

SUSPENDED PLASTER CEILING

SCALE: 3" = 1'-0" 2

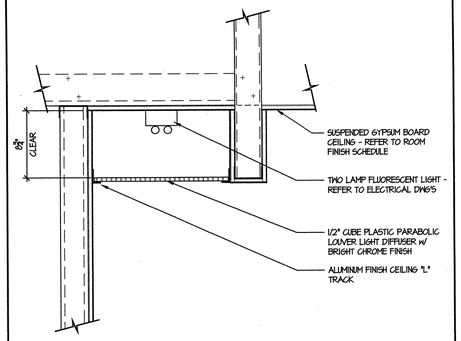

LAVATORY LIGHT SOFFIT

SCALE: 1-1/2" = 1'-0" 3

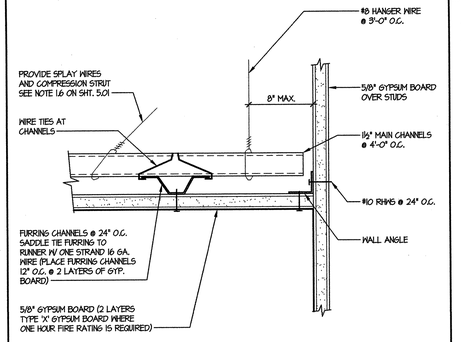

SEE GENERAL NOTES FOR ADDITIONAL INFORMATION

SUSPENDED GYPSUM BOARD CEILING

SCALE: N.T.S. 4

GENERAL NOTES

SUSPENDED PLASTER CEILING NOTES:

1. HANGER WIRES SHALL BE GALVANIZED SOFT ANNEALED MILD STEEL
2. HANGER WIRE SIZE AND SPACING PER TABLE 25A-A.
3. MAIN RUNNER AND CROSS RUNNER SIZES AND SPACING PER TABLE 25A-A. USE 1 1/2"X1.12 LB/FT HOT ROLLED CHANNEL FOR MAIN RUNNER AND 3/4X 0.3 LB/FT CHANNELS FOR CROSS RUNNERS.
4. CROSS RUNNERS SHALL BE ATTACHED TO THE MAIN RUNNERS BY SADDLE TYING WITH ONE 16 GA. OR TWO STRANDS OF 18 GA. WIRES PER SEC. 2504A.4.
5. METAL LATH SHALL BE ATTACHED TO METAL SUPPORTS WITH NOT LESS THAN 18 GA. TIE WIRES SPACED NOT MORE THAN 6" O.C. PER SEC. 2505A.3.
6. METAL LATH SHALL BE APPLIED WITH THE LONG DIMENSION OF THE SHEET PERPENDICULAR TO THE SUPPORT.
7. METAL LATH SHALL BE LAPPED NOT LESS THAN 1/2" AT SIDES AND 1" AT ENDS.
8. WHERE END LAPS DO NOT OCCUR OVER SUPPORTS THEY SHALL BE SECURELY TIED WITH NOT LESS THAN 18 GA. WIRES.

SUSPENDED GYPSUM BOARD CEILING NOTES:

1. MATERIALS.
MATERIALS ARE TO COMPLY WITH APPLICABLE UBC STANDARDS. GYPSUM BOARD IS EITHER 1/2" OR 5/8" IN THICKNESS
2. DESIGN.
FOR LATERAL LOAD REFER TO CBC SECTION 1632A. THE WEIGHT OF THE SUSPENDED CEILING SHALL NOT BE LESS THAN FOUR (4) POUNDS PER SQUARE FOOT FOR DESIGN PURPOSES.
3. DETAILS OF CONSTRUCTION.

3.1 GENERAL.
GYP BOARD CEILINGS SHOULD NOT SUPPORT MATERIALS OR BUILDING COMPONENTS OTHER THAN GRILLS, LIGHT FIXTURES, SMALL ELECTRICAL CONDUITS, SMALL DUCTS AND THE LIKE. ALL SUCH COMPONENTS SHALL BE SUPPORTED EITHER DIRECTLY FROM MAIN RUNNERS, OR BY SUPPLEMENTAL FRAMING WHICH IS SUPPORTED BY MAIN RUNNERS. NO VERTICAL LOADS OTHER THAN GYP BOARD DEAD LOAD SHALL BE APPLIED TO CROSS FURRING.

3.2 VERTICAL SUPPORT SYSTEM.

3.2.1 MAIN RUNNER AND CROSS RUNNER REQUIREMENTS

1. VERTICAL HANGER WIRES ARE #8 GAGE AND GALVANIZED; HOWEVER, IF CEILING IS NON-ACCESSIBLE, A #12 GAGE WIRE MAY BE USED.
2. CROSS-FURRING SHALL BE 1" x 0.41 LB/FT. 25 GA. GALVANIZED HAT SECTIONS
3. MAIN RUNNER AND CROSS RUNNER SPACING @ 4'-0" O.C. USE 1½" HOT ROLLED CHANNELS WEIGHING 1.12 LBS/FT.

3.2.2 THE FOLLOWING REQUIREMENTS APPLY TO ALL HANGER/RUNNER COMBINATIONS.

1. HANGERS SHOULD BE SADDLE-TIED AROUND MAIN RUNNERS TO DEVELOP THE FULL STRENGTH OF THE HANGERS.
2. CROSS-FURRING SHOULD BE SADDLE-TIED TO THE MAIN RUNNERS WITH ONE STRAND OF #16 GAGE, OR TWO STRANDS OF #18 GAGE TIE WIRE.
3. MAIN RUNNERS SHOULD BE SPLICED BY LAPPING AND INTERLOCKING FLANGES 12" MINIMUM AND TYING NEAR EACH END WITH DOUBLE LOOPS OF #16 GAGE WIRE.
4. CROSS-FURRING SHOULD BE SPLICED BY LAPPING AND INTERLOCKING THE PIECES EIGHT INCH (8") MINIMUM AND TYING NEAR EACH AND WITH DOUBLE LOOPS OF #16 GAGE WIRE.

3.2.3 FASTEN HANGER WIRES WITH NOT LESS THAN THREE (3) TIGHT TURNS. FASTEN BRACING WIRES WITH FOUR (4) TIGHT TURNS. MAKE ALL TIGHT TURNS WITHIN A DISTANCE OF 1-1/2 INCHES. HANGER OR BRACING WIRE ANCHORS TO THE STRUCTURE SHOULD BE INSTALLED IN SUCH A MANNER THAT THE DIRECTION OF THE WIRE ALIGNS AS CLOSELY AS POSSIBLE WITH THE DIRECTION OF THE FORCES ACTING ON THE WIRE.

NOTE: WIRE TURNS MADE BY MACHINE WHERE BOTH STRANDS HAVE BEEN DEFORMED OR BENT IN WRAPPING CAN WAIVE THE ½" REQUIREMENT, BUT THE NUMBER OF TURNS SHOULD BE MAINTAINED, AND BE AS TIGHT AS POSSIBLE.

SEPARATE ALL CEILING HANGING AND BRACING WIRES AT LEAST SIX INCHES (6") FROM ALL UNBRACED DUCTS, PIPES, CONDUIT, ETC.. IT IS ACCEPTABLE TO ATTACH LIGHTWEIGHT ITEMS, SUCH AS SINGLE ELECTRICAL CONDUIT NOT EXCEEDING 3/4" NOMINAL DIAMETER, TO HANGER WIRES USING CONNECTORS ACCEPTABLE TO THE DIVISION OF THE STATE ARCHITECT (DSA).

WHEN DRILLED-IN CONCRETE ANCHORS OR SHOT-IN ANCHORS ARE USED IN REINFORCED CONCRETE FOR HANGER WIRES, 1 OUT OF 10 MUST BE FIELD TESTED FOR 200 LBS. IN TENSION. WHEN DRILLED-IN CONCRETE ANCHORS ARE USED FOR BRACING WIRES, 1 OUT OF 2 MUST BE FIELD TESTED FOR 440 LBS. IN TENSION. SHOT-IN ANCHORS IN CONCRETE ARE NOT PERMITTED FOR BRACING WIRES. IF ANY SHOT-IN OR DRILLED-IN ANCHOR FAILS, SEE SECTION 1629A.3.5, TITLE 24.

NOTE: DRILLED-IN OR SHOT-IN ANCHORS REQUIRE SPECIAL DSA APPROVAL WHEN USED IN PRESTRESSED CONCRETE.

PROVIDE TRAPEZE OR OTHER SUPPLEMENTARY SUPPORT MEMBERS AT OBSTRUCTIONS TO TYPICAL HANGER SPACING. PROVIDE ADDITIONAL HANGERS, STRUTS OR BRACES AS REQUIRED AT ALL CEILING BREAKS, SOFFITS OR DISCONTINUOUS AREAS. HANGER WIRES THAT ARE MORE THAN 1 IN 6 OUT OF PLUMB ARE TO HAVE COUNTER SLOPING WIRES.

4. SUPPORT AND ANCHORAGE OF LIGHT FIXTURES AND MECHANICAL SERVICES.

4.1 ALL RECESSED OR DROP-IN LIGHT FIXTURES, AS WELL AS CEILING MOUNTED MECHANICAL AIR TERMINALS AND SERVICES, SHALL BE SUPPORTED DIRECTLY BY MAIN RUNNERS OR BY SUPPLEMENTAL FRAMING WHICH IS SUPPORTED BY MAIN RUNNERS AND POSITIVELY ATTACHED WITH SCREWS OR OTHER APPROVED CONNECTORS..

4.2 SURFACE MOUNTED FIXTURES SHALL BE ATTACHED TO A MAIN RUNNER WITH A POSITIVE CLAMPING DEVICE MADE OF MATERIAL WITH A MINIMUM OF 14 GAGE. ROTATIONAL SPRING CLAMPS DO NOT COMPLY.

5. LATERAL SYSTEM.

5.1 WIRE BRACE SYSTEM.
PROVIDE BRACING ASSEMBLIES PER DETAIL 1 AT THE FOLLOWING SPACING:

1. FOR SCHOOL BUILDINGS, PLACE BRACING ASSEMBLIES AT A SPACING NOT MORE THAN 12' BY 12' ON CENTER.
2. FOR ESSENTIAL SERVICES BUILDINGS, PLACE BRACING ASSEMBLIES NOT MORE THAN 8' BY 12' ON CENTER.
3. PROVIDE BRACING ASSEMBLIES AT LOCATIONS NOT MORE THAN 1/2 THE SPACINGS GIVEN ABOVE, FROM EACH PERIMETER WALL AND AT THE EDGE OF VERTICAL CEILING OFFSETS. THE SLOPE OF THESE WIRES SHALL NOT EXCEED 45 DEGREES FROM THE PLANE OF THE CEILING AND SHALL BE TAUT. SPLICES IN BRACING WIRES ARE NOT PERMITTED WITHOUT SPECIAL DSA APPROVAL.
4. CEILING GRID MEMBERS MAY BE ATTACHED TO NOT MORE THAN TWO (2) ADJACENT WALLS. CEILING GRID MEMBERS SHALL BE AT LEAST 1/2" FREE OF ALL OTHER WALLS. IF WALLS RUN DIAGONALLY TO CEILING GRID SYSTEM RUNNERS, ONE END OF MAIN AND CROSS RUNNERS SHOULD BE FREE, AND A MINIMUM OF 1/2" CLEAR OF WALL.
5. SUSPENDED CEILING SYSTEMS WITH AN AREA OF 144 SQUARE FEET OR LESS, AND FIRE RATED CEILING SYSTEMS WITH AN AREA OF 96 SQUARE FEET OR LESS, SURROUNDED BY WALLS WHICH CONNECT DIRECTLY TO THE STRUCTURE ABOVE, DO NOT REQUIRE BRACING ASSEMBLIES WHEN ATTACHED TO AT LEAST TWO ADJACENT WALLS.

5.2 ALTERNATE SYSTEM.
DESIGN AS A DIAPHRAGM, SIMILAR TO PLYWOOD DIAPHRAGM CONCEPT, SUBJECT TO ACCEPTANCE BY THE DSA REGIONAL OFFICE.

5.2.1 DIAPHRAGM RATIOS.
HORIZONTAL 2:1 MAXIMUM
VERTICAL 1:1 MAXIMUM

5.2.2 A MAXIMUM DIAPHRAGM SHEAR EQUAL TO 50 LBS/FT. IS ALLOWED WITH 1" OR 1/4" HI-LO TYPE S OR S-12 BUGLE HEAD SCREWS AT 12" O.C. AND 3/8" SCREW EDGE DISTANCE AT ALL GYPSUM BOARD EDGES AND INTERMEDIATE SUPPORTS. A WALL CONSTRUCTED SIMILARLY CAN RESIST THE SAME SHEAR FORCE PROVIDED THE GYPSUM BOARD IS ON THE SAME SIDE OF THE STUDS AS THE CEILING IS, AND A POSITIVE CONNECTION BETWEEN THE CEILING AND THE WALL IS DETAILED. THE GYPSUM BOARD DIAPHRAGMS ARE TO RESIST LATERAL LOADS DUE TO THEIR OWN WEIGHT AND/OR THE CEILING DIAPHRAGM(S) ONLY.

5.2.3 DETAILS ARE REQUIRED PROVIDING FOR LATERAL LOAD TRANSFER FROM THE GYPSUM BOARD TO SHEAR WALLS, OR OTHER LATERAL LOAD RESISTING GYPSUM BOARD TO SHEAR WALLS, OR OTHER LATERAL LOAD RESISTING ELEMENTS, ON ALL FOUR SIDES OD DIAPHRAGM.

tBP
architecture
planning
interiors
management

LICENSED ARCHITECT CHRISTOPHER A. JOSEPH No. C-14885 STATE OF CALIFORNIA

tBP/Architecture
1000 Burnett Ave, Suite 140
Concord, CA 94520
ph: 925.246.6419 fx: 925.246.6495

architect

consultant

IDENTIFICATION STAMP DIV. OF THE ARCHITECT OFFICE OF REGULATION SERVICES
APPL. NO. 1997/19
BY: [illegible]
DATE: [illegible]

agency

SAN RAMON VALLEY CENTER
CONTRA COSTA COMMUNITY COLLEGE DISTRICT
SAN RAMON, CALIFORNIA

owner

tBP project number : 2021.00
file name: D11-0502.dwg
drawn by: checked by:
date: 08-04-04 plot scale: 1:1

Rev:	date:	description:

drawing title: TYPICAL SUSPENDED PLASTER/ GYP. BD. DETAILS

building no.:

drawing no.: 5.02

drawing of

BE ABSOLUTELY DESIGNED TO ENJOY HAVE YOU DO

400 SERIES - TALL STORAGE CABINET DESIGNS

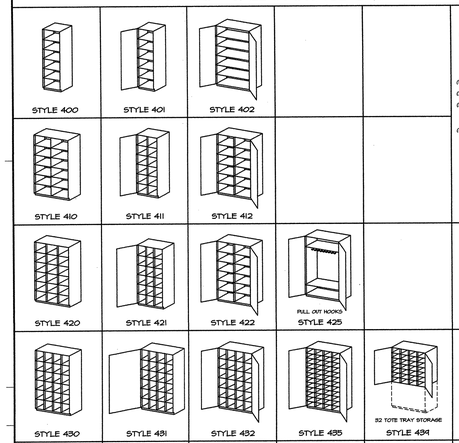

TALL STORAGE CABINETS

LENGTHS: 16 , 18 , 24 , 32 , 36 [48]

HEIGHTS: 72 , 80 [84] , 96

DEPTHS: 12 , 15 , 18 , 21 [24] , 27 , 30 , 33 , 36 , 39 , 42 , 45 , 48

(1) (5) ADJUSTABLE SHELVES EACH SECTION

(2) DOORS EQUAL IN SIZE FOR EACH CABINET

(3) TOTE TRAYS ON ¾" FIXED HARDBOARD SHELVES UNLESS SPECIFIED ON METAL GUIDES. TOTE TRAYS AND SIZES MUST BE SPECIFIED.

(4) FRAMELESS SLIDING GLASS DOORS OF ¼" SAFETY PLATE GLASS ON BALL ROLLER GUIDES.

300 SERIES - WALL HUNG CABINET DESIGNS

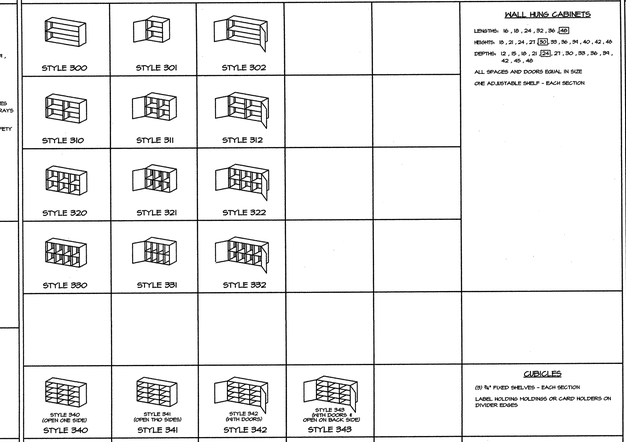

WALL HUNG CABINETS

LENGTHS: 16 , 18 , 24 , 32 , 36 [48]

HEIGHTS: 15 , 21 , 24 , 27 [30] , 33 , 36 , 39 , 40 , 42 , 45

DEPTHS: 12 , 15 , 18 , 21 [24] , 27 , 30 , 33 , 36 , 39 , 42 , 45 , 48

ALL SPACES AND DOORS EQUAL IN SIZE

ONE ADJUSTABLE SHELF - EACH SECTION

CUBICLES

(3) ¾" FIXED SHELVES - EACH SECTION

LABEL HOLDING HOLDINGS OR CARD HOLDERS ON DIVIDER EDGES

MAIL BOXES

(5) ¼" FIXED SHELVES - EACH SECTION

LABEL HOLDING HOLDINGS OR CARD HOLDERS ON DIVIDER EDGES

700 SERIES - MOVABLE CABINET DESIGNS

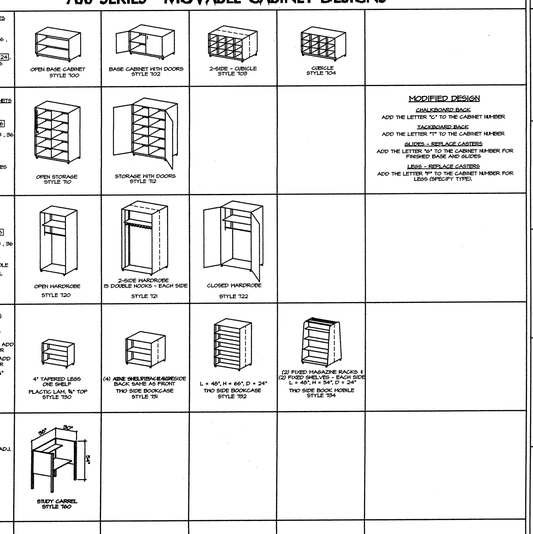

MOVABLE BASE CABINETS

LENGTHS: 32 , 36 [48]

HEIGHTS: 24 , 27 [30] , 36 , 39 , 42

DEPTHS: 12 , 15 , 18 , 21 [24] , 27 , 30 , 33 , 36 , 39 , 42

ONE ADJUSTABLE SHELF

MOVABLE STORAGE CABINETS

LENGTHS: 32 , 36 [48]

HEIGHTS: 48 , 54 , 60 [66]

DEPTHS: [24] , 27 , 30 , 33 , 36

FOUR ADJUSTABLE SHELVES

MODIFIED DESIGN

CHALKBOARD BACK

ADD THE LETTER "C" TO THE CABINET NUMBER

TACKBOARD BACK

ADD THE LETTER "T" TO THE CABINET NUMBER

GLIDES - REPLACE CASTERS

ADD THE LETTER "A" TO THE CABINET NUMBER FOR FINISHED BASE AND GLIDES

LEGS - REPLACE CASTERS

ADD THE LETTER "F" TO THE CABINET NUMBER FOR LEGS (SPECIFY TYPE)

MOVABLE WARDROBE CABINETS

LENGTHS: 32 , 36 [48]

HEIGHTS: 48 , 54 , 60 [66]

DEPTHS: [24] , 27 , 30 , 33 , 36

(1) ONE ADJ. 18" SHELF

(2) ONE ADJ. CLOTHES POLE

(3) DOUBLE-WHEEL SWIVEL CASTERS

MOVABLE BOOKCASES

(1) DOUBLE-WHEEL SWIVEL CASTERS

(2) CHALKBOARD BACK - ADD "C" TO CABINET NUMBER

(3) TACKBOARD BACK - ADD "T" TO CABINET NUMBER

(4) PLASTIC LAMINATED ¾" TOPS ON "30 X 15"

STUDY CARRELS

(1) SUPREME GRADE

(2) 1" ALUMINUM LEG WITH ADJ.

200 SERIES - DRAWER BASE CABINET DESIGNS

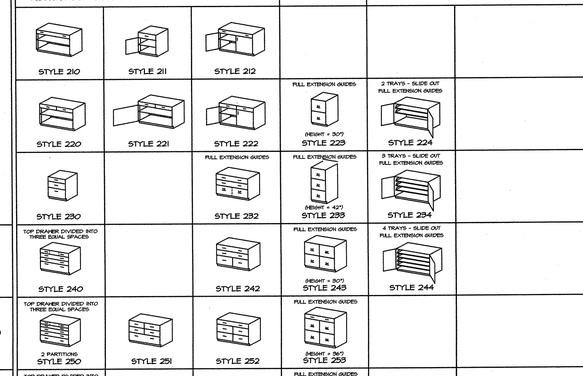

DRAWER BASE CABINETS

LENGTHS: 16 , 18 , 24 , 32 , 36 [48]

HEIGHTS: 24 , 27 , 30 [36] , 39 , 42 , 45 , 48 , 54 , 60 , 66 (INCLUDING ¾" TOP)

DEPTHS: 12 , 15 , 18 , 21 [24] , 27 , 30 , 33 , 36 , 39 , 42 , 45 , 48

ONE ADJUSTABLE SHELF

ALL DOORS AND DRAWERS EQUAL IN WIDTH

FILES

LEGAL SIZE: H = 24"

LETTER SIZE: H = 18"

FOLLOWER AND CARD HOLDER

FULL EXTENSION GUIDES

FOLLOWER & CARD HOLDER

APPROXIMATE OUTSIDE DRAWER HEIGHTS:

3" , 6¾" , 6" , 4" , 10¾" , 12"

100 SERIES - BASE CABINET DESIGNS

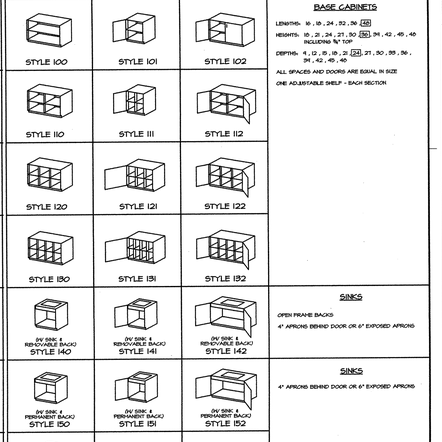

BASE CABINETS

LENGTHS: 16 , 18 , 24 , 32 , 36 [48]

HEIGHTS: 16 , 21 , 24 , 27 , 30 [36] , 39 , 42 , 45 , 48 INCLUDING ¾" TOP

DEPTHS: 9 , 12 , 15 , 18 , 21 [24] , 27 , 30 , 33 , 36 , 39 , 42 , 45 , 48

ALL SPACES AND DOORS ARE EQUAL IN SIZE

ONE ADJUSTABLE SHELF - EACH SECTION

SINKS

OPEN FRAME BACKS

4" APRONS BEHIND DOOR OR 6" EXPOSED APRONS

SINKS

4" APRONS BEHIND DOOR OR 6" EXPOSED APRONS

CART STORAGE

OPEN TO FLOOR

HARDWOOD SIDE GUIDES

SEE SERIES 300 FOR CARTS

CUBICLE STORAGE

(5) ADJUSTABLE SHELVES - EACH SECTION (AS ILLUSTRATED)

TOTE TRAY STORAGE

NOT ILLUSTRATED

USE CUBICLE NUMBERS WITH NOTE ON DRAWINGS

ON ¾" FIXED SHELVES UNLESS TOTE TRAY GUIDES ARE SPECIFIED

SPECIFY QUANTITY MATERIAL AND SIZE OF TOTE TRAYS

KNEE HOLE SPANS

6" HIGH EQUAL SPACED CUBICLE

SOLID WEB TOP AND BOTTOM

TYPICAL CASEWORK SYMBOLS AND NOTATIONS

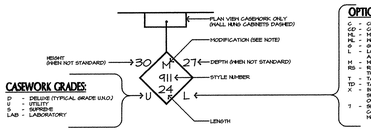

CASEWORK GRADES:

D - DELUXE (TYPICAL GRADE U.N.O.)
U - UTILITY
L - LABORATORY
LAB - LABORATORY

OPTIONS:

C - CHALKBOARD ON BACK
CD - CHALKBOARD ON DOOR
ML - METAL LEGS TO REPLACE CASTERS
PL - PLASTIC LEGS TO REPLACE CASTERS
A - GLIDES TO REPLACE CASTERS
L - LOCKS REQUIRED AT ALL DOORS AND/OR DRAWERS IN CABINETS
H - MODIFICATION TO STYLE (NO.)
RS - REVERSE SWING OF DOOR(S) RIGHT THAT SHOWN ON DETAIL SHEETS
T - TACKBOARD ON BACK
TD - TACKBOARD ON DOOR
X - IN LIEU OF STYLE NO. INDICATES THAT CABINET IS NOT ILLUSTRATED ON DETAIL SHEETS
T - SUPPLY ON 100 AND 200 SERIES CONVERTS BASE UNITS TO MOVEABLE UNITS

STANDARD DIMENSIONS:

SERIES NO.	TYPE	STD. DIMENSION #	"
100 200	BASE CABINETS	34	24
100 200	DRAWER BASE CABINETS	34	24
300	WALL HUNG CABINETS	30	12
400	TALL STORAGE CABINETS	84	24
400	TALL WARDROBE CABINETS	84	24
400	LIBRARY CABINETS - SHELVING	84	9
400	LIBRARY CABINETS - COUNTERS	42	24
700	MOVABLE CABINETS	-	-
800	SPECIAL DESIGN CABINETS	-	-
900	SCIENCE CABINETS	-	-
0	ADJUSTABLE SHELVES	30	12

TYPICAL NOTES:

A. CASEWORK:
1. ON ELEVATIONS CABINETS CALLED OUT ON BUILDING INTERIOR ELEVATIONS AND FLOOR PLANS SHALL BE PROVIDED.

2. DOOR SWINGS SHALL BE AS SHOWN ON INTERIOR ELEVATIONS. IF NOT ELEVATED, SWINGS SHALL BE AS SHOWN ON DETAIL SHEET ILLUSTRATIONS. SYMBOL 'RS' INDICATES REVERSE SWING.

3. ALL CABINET DIMENSIONS INDICATED ARE NOMINAL OUTSIDE DIMENSIONS, AND SHALL NOT BE EXCEEDED. CABINETS MAY BE REDUCED IN DEPTH TO WALLS MAY BE INCREASED IN LENGTH TO ELIMINATE THE NEED FOR FILLER STRIPS). A ¼" TOLERANCE IS PERMITTED ON DIMENSIONS OVER 96". ON OVERALL LENGTH DIMENSIONS, TOLERANCE IS LIMITED TO 96th. HEIGHT DIMENSION OF BASE CABINETS INCLUDES FINISHED TOP.

4. PROVIDE BACKING IN WALL AS REQUIRED AND PER DETAILS 21, 14, OR 15 ON SHT. 4.02.

5. ALIGN SIDE OF CABINET WITH EDGE OF DOOR FRAME WHERE OCCURS.

6. PAPER AND CHART STORAGE UNITS: 12" DEEP, 24" DEEP UNLESS OTHERWISE NOTED.

B. COUNTERTOPS AND BACKSPLASHES:
1. WHERE BACKSPLASH IS INDICATED:
IT SHALL BE 4" HIGH at NON-SINK AREAS & 6" HIGH OR TO UNDERSIDE OF UPPER CABINETS at WET AREAS (SEE INTERIOR ELEVATIONS). TOP MOUNTED TYPE, HAVING SQUARE TOP WITH SHELF EDGE.

BE ADJUSTABLE, DETERMINED TO SUIT PART 1001.DGN

tBP
architecture
planning
interiors
management

tBP/Architecture
1000 Burnett Ave, Suite 140
Concord, CA 94520
ph: 925.246.6419 fx: 925.246.6495

architect

consultant

IDENTIFICATION STAMP
DIVISION OF THE ARCHITECT
DIV. OF REGULATION SERVICES
APPL NO.: 107219
DATE: 4-6-05

agency

SAN RAMON VALLEY CENTER

CONTRA COSTA COMMUNITY COLLEGE DISTRICT

SAN RAMON, CALIFORNIA

owner

tBP project number : 2021.00

file name: DTL601.DWG

drawn by: KH checked by:

date: 03-04-04 plot scale: 1:1

Rev.	date:	description:

drawing title: W.I.C. CABINET DESIGNS

building no.:

drawing no.: 6.01

drawing of

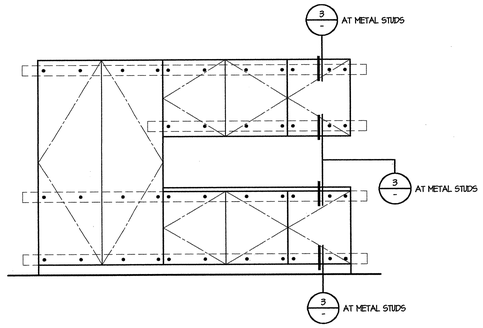

NOTES

1. #12 LAG SCREWS (AT WOOD STUDS) OR #12 TEK SCREWS (AT METAL STUDS) SPACE ANCHORS AT 16" O.C., MINIMUM OF ONE SCREW AT EACH TOP AND BOTTOM CORNER OF EACH CABINET UNIT.
2. SEE INTERIOR ELEVATIONS AND FLOOR PLANS FOR CABINET CONFIGURATION AND DIMENSIONS.
3. STUDS OF WALLS BACKING CABINETS SHALL RUN FROM SLAB TO STRUCTURE ABOVE.
4. AT C.M.U. PROVIDE 3/8"ø X 3" LONG ITW RAMSET/REDHEAD DYNABOLT SLEEVE ANCHOR (ICBO # 1372)
5. SEE DETAIL 18/4.02 FOR WALL HUNG BACKING (@ METAL STUDS)

BACKING AND ANCHORAGE DETAIL

SCALE: 1/2" = 1'-0" | 2

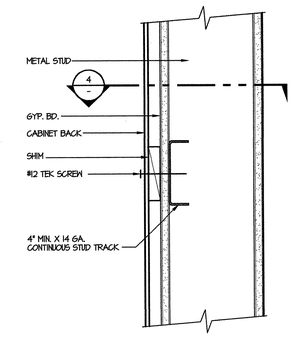

BACKING SECTION - METAL STUDS

SCALE: 3" = 1'-0" | 3

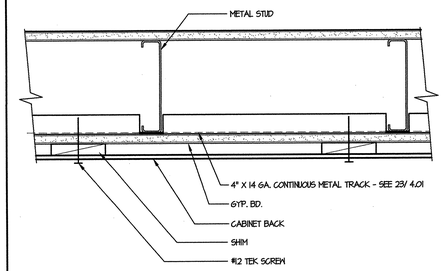

BACKING SECTION - METAL STUDS

SCALE: 3" = 1'-0" | 4

GENERAL NOTES

CASEWORK

1. ONLY THOSE CABINETS CALLED OUT ON BUILDING INTERIOR ELEVATIONS AND FLOOR PLANS SHALL BE PROVIDED.
2. DOOR SWINGS SHALL BE AS SHOWN ON INTERIOR ELEVATIONS. IF NOT ELEVATED, SWINGS SHALL BE AS SHOWN ON DETAIL SHEET ILLUSTRATIONS. SYMBOL 'RS' INDICATES REVERSE SWING.
3. ALL CABINET DIMENSIONS INDICATED ARE NOMINAL OUTSIDE DIMENSIONS, AND SHALL NOT BE EXCEEDED; (EXCEPTION - CABINETS ADJACENT TO WALLS MAY BE INCREASED IN LENGTH TO ELIMINATE THE NEED FOR FILLER STRIPS). A 1/8" TOLERANCE IS PERMITTED ON DIMENSIONS OVER 48". FOR 48" AND SMALLER DIMENSIONS, TOLERANCE IS LIMITED TO 1/16. HEIGHT DIMENSION OF BASE CABINETS INCLUDES FINISHED TOP.
4. ALIGN SIDE OF CABINET WITH EDGE OF DOOR FRAME WHERE OCCURS.
5. PAPER AND CHART STORAGE UNITS SHALL BE 27" DEEP UNLESS OTHER WISE NOTED.

COUNTERTOPS AND BACKSPLASHES

1. WHERE BACKSPLASH IS INDICATED, IT SHALL BE 4" HIGH @ NON-SINK AREAS & 6" HIGH OR TO UNDERSIDE OF UPPER CABINETS @ WET AREAS (SEE INTERIOR ELEVATIONS), TOP MOUNTED TYPE, HAVING SQUARE TOP WITH SHELF EDGE.

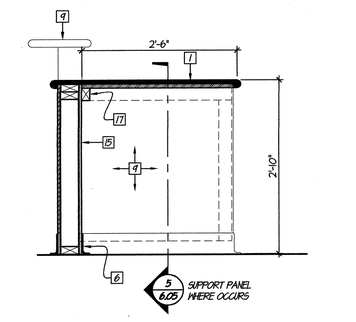

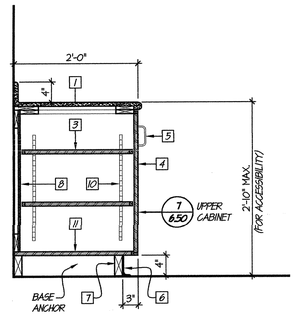

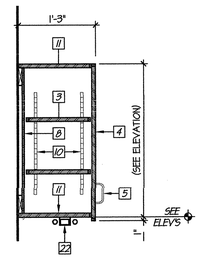

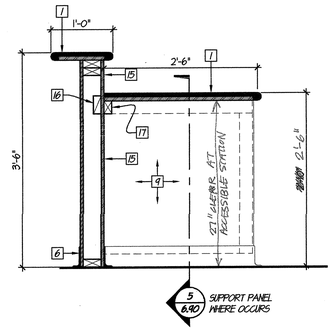

SUPPORT PANEL

SCALE: 1" = 1'-0" | 5

BASE CABINET

SCALE: 1" = 1'-0" | 6

WALL CABINET

SCALE: 1" = 1'-0" | 7

COUNTER

SCALE: 1" = 1'-0" | 8

CASEWORK DETAIL KEYNOTES

1. COUNTERTOP - POST FORMED PLASTIC LAMINATE OVER 3/4" PARTICLE BD. OR PLYWOOD SUBSTRATE. FOR EDGE CONDITION, SEE DETAIL 12A/6.50
2. DRAWERS - 3/4" PLYWOOD FRONTS, 1/4" PLYWOOD BOTTOMS, 1/2" PLYWOOD SIDES (SEE ELEVS FOR QUANTITY AND ARRANGEMENT).
3. SHELVES - 3/4" PLYWOOD (SEE ELEVS FOR QUANTITY AND ARRANGEMENT)
4. DOORS - 3/4" PLYWOOD, TYP.
5. PULLS - 4" ALUMINUM WIRE
6. BASE AS SCHEDULED (4" RUBBER U.N.O.)
7. 2X RUNNERS, TYP.
8. BACKING - 1/4" PLYWOOD O/ 1X BLOCKING
9. CASEWORK BEYOND
10. RECESSED METAL SHELF STANDARDS
11. CARCASS - 3/4" PLYWOOD
12. 2x4 FRAMING AT 16 O.C.
13. HARDWOOD PLYWOOD FACING W/ HARDWOOD EDGE BAND AT ALL EXPOSED EDGES
14. (NOT USED)
15. FACE PANEL - 1/2" PLYWOOD
16. 2X BLOCKING
17. CONTINUOUS 2X3 LEDGER
18. 2X3 FRAME
19. LINE OF COUNTERTOP ABOVE (SHOWN 'DASHED')
20. TACKBOARD PANEL (SHOWN 'DASHED')
21. WALL AS SCHEDULED
22. UNDERCOUNTER LIGHTING, SEE LIGHTING PLANS
24. SOFFIT LIGHTING, SEE LIGHTING PLANS
25. 5/8" GYP. BOARD O/ METAL FRAMING

GENERAL CASEWORK DETAIL NOTES:

1. ALL EXTERIOR SURFACES TO BE PLASTIC LAMINATE FINISH U.N.O.
2. ALL INTERIOR SURFACES, (I.E. CARCASS INTERIORS, SHELVING, DOOR INTERIORS, ETC.) TO BE THERMOSET DECORATIVE OVERLAY U.N.O.

BASE CABINET

SCALE: 1" = 1'-0" | 9

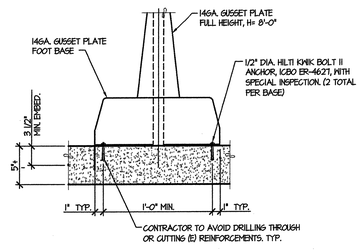

DBL STACK ANCHORAGE

SCALE: 1-1/2" = 1'-0" | 15

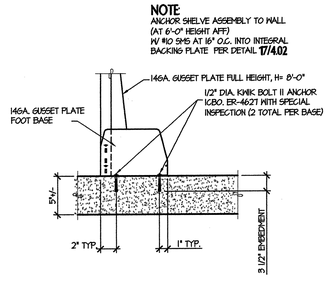

SGL STACK ANCHORAGE

SCALE: 1-1/2" = 1'-0" | 16

BE ABSOLUTELY CERTAINED TO PLOT ONLY TO SCALE

tBP
architecture
planning
interiors
management

LICENSED ARCHITECT RENEWAL 08/31/2014 C-26855 STATE OF CALIFORNIA

tBP/Architecture
1000 Bunett Ave, Suite 140
Concord, CA 94520
ph: 9252466419 fx: 9252466495

architect

consultant

VERIFICATION STAMP
DSA, OF THE STATE ARCHITECT
OFFICE OF REVIEWING SYSTEMS
APPL NO. 1-107719
BY: [illegible]
DATE: 5/14/08

agency

SAN RAMON VALLEY CENTER

CONTRA COSTA COMMUNITY COLLEGE DISTRICT

SAN RAMON, CALIFORNIA

owner

tBP project number : 20212.00

file name: D11-0601.dwg

drawn by: DLF checked by:

date: 03-04-04 plot scale: 1:1

Rev:	date:	description:

drawing title: TYPICAL CASEWORK DETAILS

building no:

drawing no: 6.50

drawing of

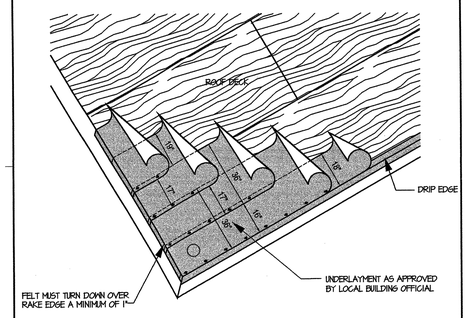

DOUBLE LAYER UNDERLAYMENT

SCALE: 3/8" = 1'-0" | 1

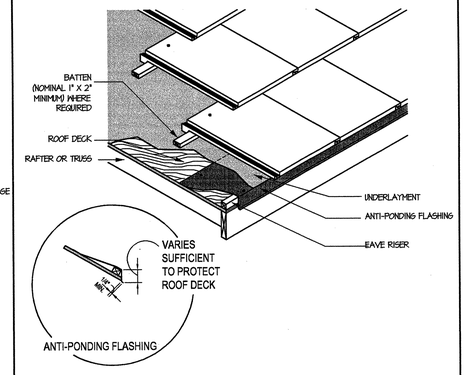

DOWN SLOPE W/ ANTI-PONDING FLASH'G

SCALE: 3/4" = 1'-0" | 2

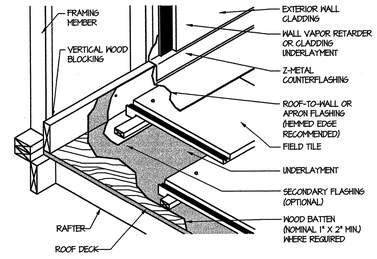

HEAD WALL METAL FLASHING

SCALE: 1" = 1'-0" | 3

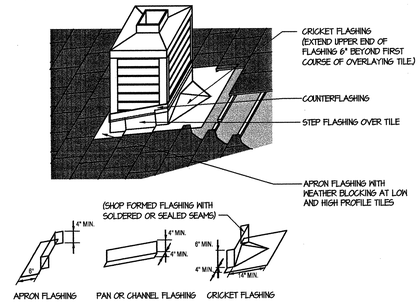

CHIMNEY CRICKET FLASHING- STEP TYPE

SCALE: 3/8" = 1'-0" | 4

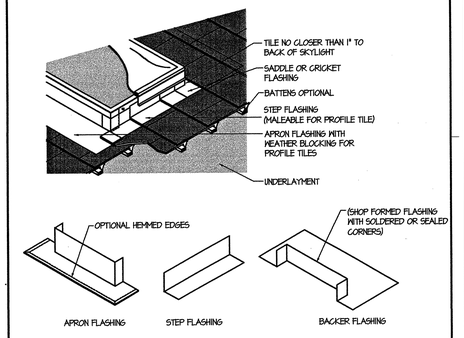

CURB STEP FLASHING

SCALE: 1/2" = 1'-0" | 5

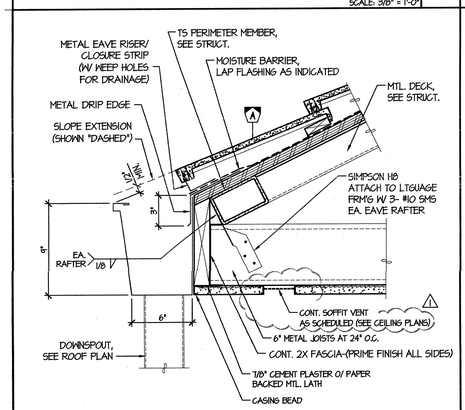

TYPICAL GUTTER

FILENAME: SCALE: NONE | 3

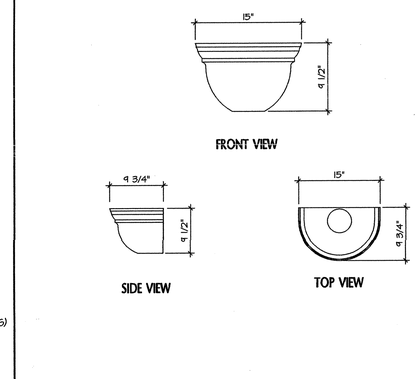

COLLECTOR HEAD

N.T.S. | 7

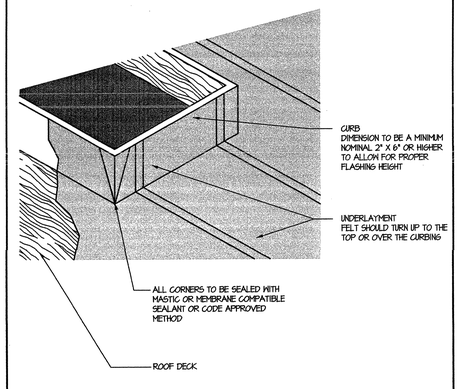

CURB UNDERLAYMENT DETAIL

SCALE: 3/4" = 1'-0" | 8

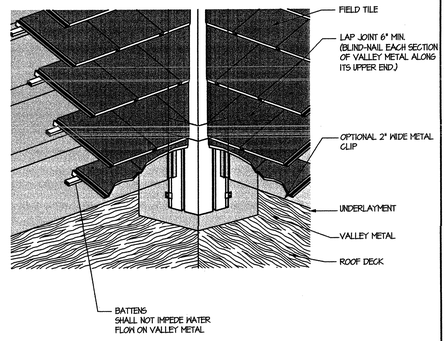

OPEN VALLEY

SCALE: 1/2" = 1'-0" | 9

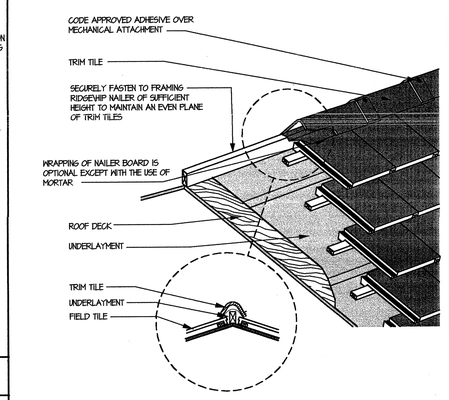

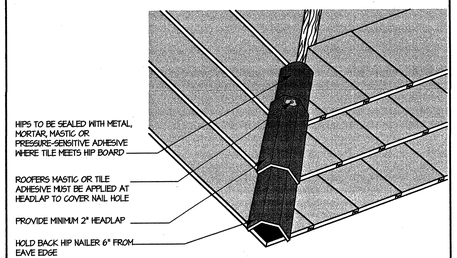

HIP AND RIDGE

SCALE: 3/4" = 1'-0" | 15

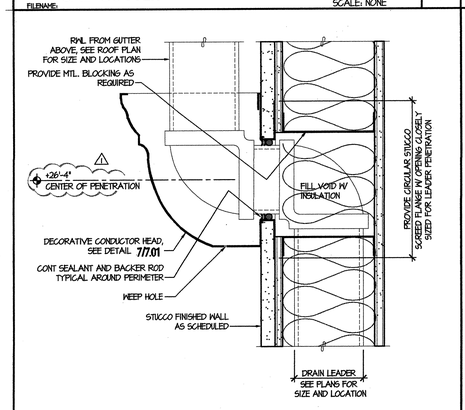

RAIN WATER LEADEDR THRU WALL

SCALE: 3" = 1'-0" | 11

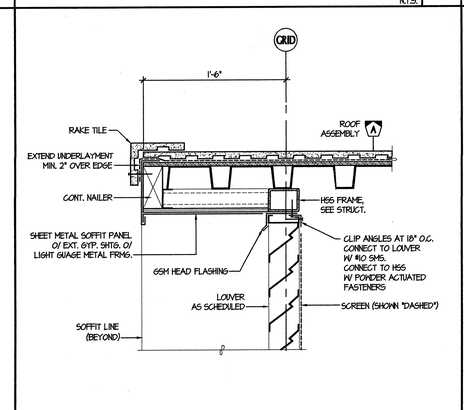

DORMER HEAD

SCALE: 1-1/2" = 1'-0" | 12

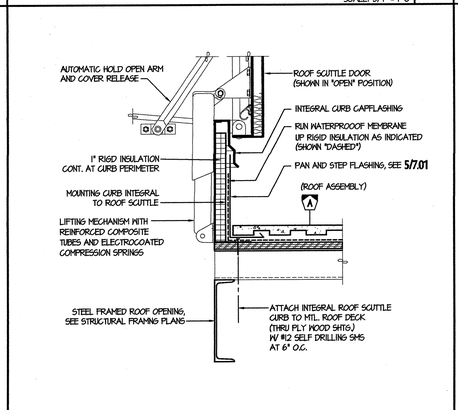

ROOF SCUTTLE

SCALE: NONE | 13

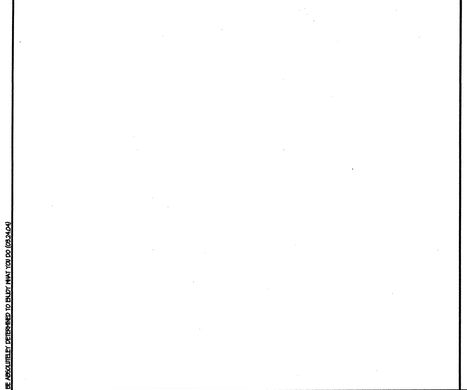

DORMER SILL

SCALE: 1-1/2" = 1'-0" | 17

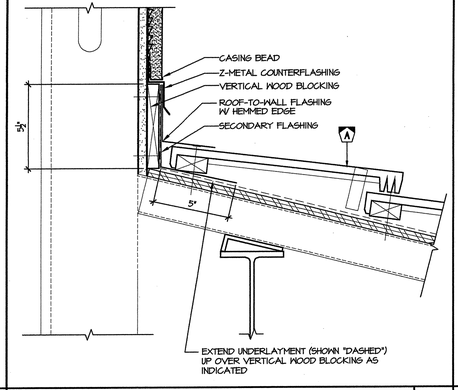

CONC. TILE SHED TO WALL

SCALE: 3"=1'-0" | 18

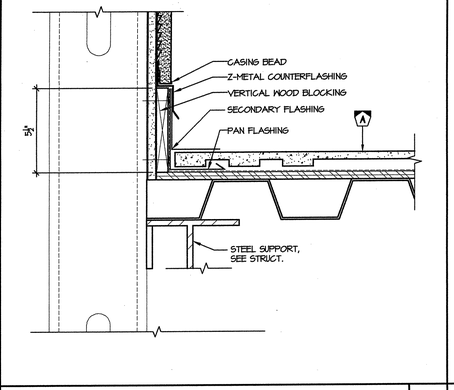

ROOF RAKE

SCALE: 3"=1'-0" | 19

IF ABSOLUTELY DETERMINED TO ENLIST ANY TOOLS ABOVE

tBP
architecture
planning
interiors
management

tBP/Architecture
1000 Burnett Ave, Suite 140
Concord, CA 94520
ph: 925.246.6419 fx: 925.246.6495

architect

consultant

APPROVED
DEPARTMENT OF THE STATE ARCHITECT
DATE OF ISSUANCE 8/1/2005
APPL NO. 1525719
ACCESS FEE $ 150.00
DATE 5-9-06

agency

SAN RAMON VALLEY CENTER
CONTRA COSTA COMMUNITY COLLEGE DISTRICT
SAN RAMON, CALIFORNIA

owner

tBP project number : 20212.00
file name: DTL_T01.dwg
drawn by: DM checked by:
date: 03-09-04 plot scale: 1:1

Rev.	date:	description:
1	05-26-04	DESIGN CLARIFICATIONS

drawing title: ROOF DETAILS
building no:

drawing no: 7.01
drawing of

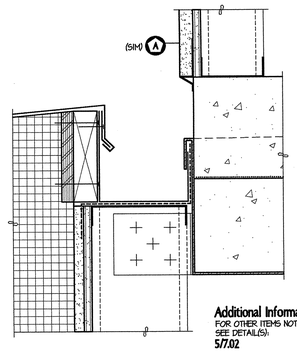

Additional Information:
FOR OTHER ITEMS NOT NOTED SEE DETAIL(S):
5/7.02

GUTTER @ COLUMN 3" = 1'-0" 3

KEYNOTES

1. 3/4" PLYWOOD NAILER EMBEDDED INTO FOAM SHAPE
2. GSM COPING
3. CONTINUOUS CLEAT
4. CEMENT PLASTER FINISH COAT
5. PRE-COATED FOAM SHAPE
6. BROWAN COAT CEMENT PLASTER O/ EXTERIOR WALL AS SCHEDULED
7. GSM GUTTER (NO SLOPE)
8. CONTINUOUS TYPE 2 WATERPROOF MEMBRANE APPLIES UNDER GUTTER
9. LIGHTGUAGE TRACK HEAD
10. CURTAIN WALL FRAMING TO DECK EDGE, SEE DETAIL 0/A0.0
11. STEEL FRAMING SYSTEM, SEE STRUCT.
12. 1/2" DEEP (MIN) WATERPROOF GROUT
13. NON-SHRINK GROUT
14. GUARDRAIL SUPPORT POST

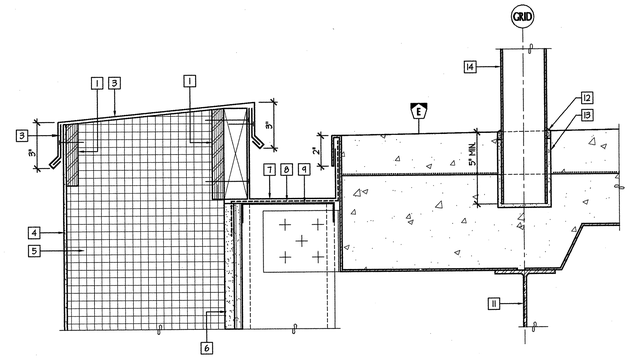

BUILT- IN GUTTER 3" = 1'-0" 5

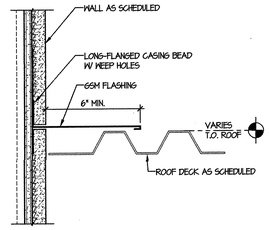

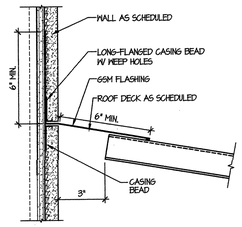

CANOPY RAKE 3" = 1'-0" 9

CANOPY SHED @ WALL 3" = 1'-0" 10

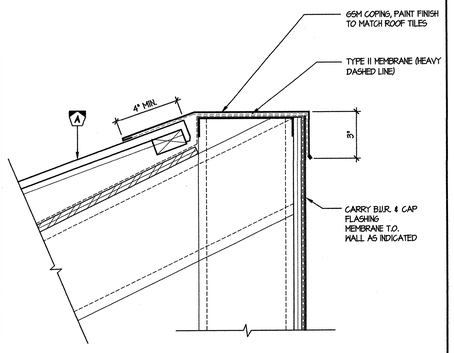

MANSARD HEAD 3" = 1'-0" 13

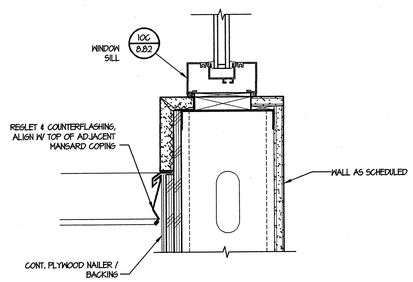

ROOF TERMINATION 3" = 1'-0" 14

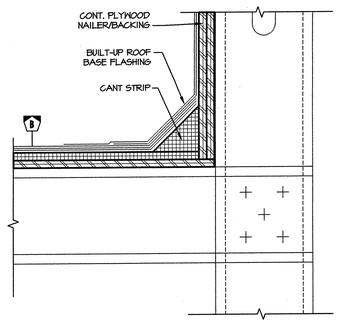

CANT STRIP 3" = 1'-0" 19

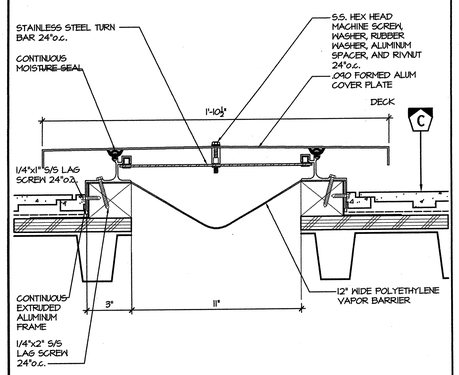

ROOF EXPANSION JOINT SCALE: 3" = 1'-0" 20

IF ADJUSTED AS PRINTED TO FULL SHEET 100.00

tBP architecture planning interiors management

tBP/Architecture
1000 Burnett Ave, Suite 140
Concord, CA 94520
ph: 925.246.6419 fx: 925.246.6495

LICENSED ARCHITECT CHRISTIE A. PAL No. C-34865 REG. 12-31-13 STATE OF CALIFORNIA

architect

consultant

IDENTIFICATION STAMP DIV. OF THE STATE ARCHITECT OFFICE OF REGULATION SERVICES
APPL NO. 102719
BY: [illegible] DATE: 12/15/05

agency

SAN RAMON VALLEY CENTER
CONTRA COSTA COMMUNITY COLLEGE DISTRICT
SAN RAMON, CALIFORNIA

owner

tBP project number : 20212.00
file name: DTL_702.dwg
drawn by: DM checked by:
date: 03-04-04 plot scale: 1:1

Rev:	date:	description:

drawing title: ROOF DETAILS
building no.:

drawing no.: 7.02
drawing of

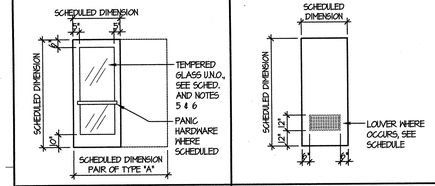

DOOR TYPE A
EXTERIOR STOREFRONT

DOOR TYPE B
EXTERIOR DOOR

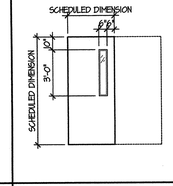

DOOR TYPE C
EXTERIOR CLASSROOM DOOR

(NOT USED)

DOOR TYPE D

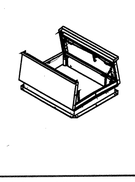

DOOR TYPE E
INTERIOR DOOR W/ SIDE LIGHT

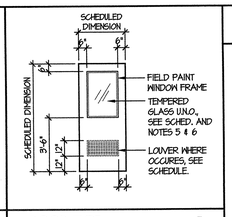

DOOR TYPE F
INTERIOR DOOR W/ WINDOW

(NOT USED)

DOOR TYPE G

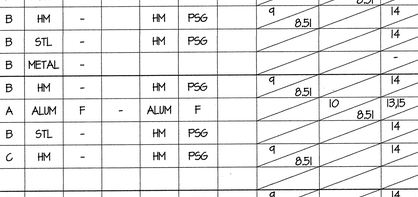

DOOR TYPE H
CLOSET SLIDING DOORS

(NOT USED)

DOOR TYPE I

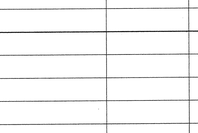

DOOR TYPE J
EXTERIOR GATES

(NOT USED)

DOOR TYPE K

ABBREVIATIONS

AFP	ACCORDION TYPE PARTITION
ALUM	ALUMINUM
AS	ACID STAIN
ATFD	ACCORDION TYPE FIRE DOOR
DP	DEMOUNTABLE PARTITION
(E)	EXISTING
EEH	EMERGENCY EGRESS HARDWARE
EP	EPOXY PAINT
F	FACTORY FINISH
FFD	FOLDING FABRIC DOOR
FPP	FOLDING PANEL PARTITION
FPWD	FOLDING PANEL WOOD DOOR
GL	GLASS
HCN.	HOLLOW CORE NATURAL FINISH
HCP	HOLLOW CORE PAINT FINISH
HM.	HOLLOW METAL
LAQ	LACQUER FINISH
MCN.	MINERAL CORE NATURAL FINISH
MCP	MINERAL CORE PAINT FINISH
PE	PAINT EGGSHELL
PF	PAINT FLAT
PG	PAINT GLOSS
PS	PREFINISHED STEEL
PSG.	PAINT SEMI-GLOSS
S.	SEAL
SCN.	SOLID CORE NATURAL FINISH
SCP	SOLID CORE PAINT FINISH
SCPL	SOLID CORE PLASTIC LAMINATE
SG	SOUND GASKETED, SEE DETAIL 5/8.50
SF	STAIN FINISH
SST	STAINLESS STEEL
STL	STEEL
UG.	UNGLAZED
VF.	VARNISH
W	WAX

NOTES

1. DOORS SHALL BE 1-3/4" THICK, UNLESS NOTED OTHERWISE.
2. THE LETTER 'PR' PRECEDING THE 'DOOR WIDTH' DESIGNATION IN THE DOOR SCHEDULE INDICATES PAIR OF DOORS. BOTH DOOR LEAVES ARE THE SAME SIZE, UNLESS NOTED OTHERWISE.
3. THE LETTER 'X' FOLLOWING THE 'DOOR TYPE' LETTER IN THE DOOR SCHEDULE INDICATES A FIXED PANEL ABOVE DOOR LEAF. SCHEDULE DIMENSION INCLUDES PANEL, UNLESS NOTED OTHERWISE.
4. FIXED PANELS SHALL BE OF THE SAME MATERIAL, CONSTRUCTION, AND THICKNESS AS DOOR LEAF, AND SHALL BE PROVIDED BY THE SAME MANUFACTURER, UNLESS NOTED OTHERWISE.
5. THE LETTER 'L' FOLLOWING 'DOOR TYPE' DESIGNATION IN THE DOOR SCHEDULE INDICATES DOORS WITH LOUVERS. SEE DOOR TYPE FOR SIZE OF LOUVER.
6. LOUVERS IN EXTERIOR DOORS SHALL BE VANDAL-PROOF, SECURITY TYPE.
7. GLASS IN ALL FIRE RATED DOORS SHALL BE U.L. LISTED, 1/4" THICK, 45 MINUTE, WIRE GLASS, INSTALLED IN STEEL FRAMES.
8. GLASS IN NON-RATED EXTERIOR DOORS SHALL BE TINTED TEMPERED GLASS.
9. DOOR REQUIREMENTS

   ALL DOORS IN BUILDINGS, INCLUDING, BUT NOT LIMITED TO DOORS OF TOILETS AND STORAGE ROOMS, SHALL CONFORM WITH THE REQUIREMENTS OF THE LATEST EDITION OF THE CALIFORNIA BUILDING CODE.

   - EXIT DOOR SHALL BE OPERABLE FROM THE INSIDE WITHOUT THE USE OF A KEY OR ANY SPECIAL KNOWLEDGE OR EFFORT.
   - HAND ACTIVATED DOOR OPENING HARDWARE SHALL BE CENTERED BETWEEN 30" AND 44" ABOVE FINISH FLOOR.
   - DEAD BOLTS ARE NOT PERMITTED UNLESS OPERABLE WITH A SINGLE EFFORT LEVER TYPE HARDWARE.
   - ALL ROOMS SERVING AN OCCUPANCY LOAD OF 50 OR GREATER AND DOORS LOCATED ON THE DISCHARGE OF EXIT CORRIDORS ARE REQUIRED TO BE PROVIDED WITH PANIC HARDWARE (CBC 1007.3.10).
   - ALL FIRE DOOR LABELS SHALL COMPLY WITH C.B.C. 7.13.3

10. FOR SIGNAGE TEXT USE ROOM NAMES AS INDICATED ON **FLOOR PLANS**

DOOR SCHEDULE

DOOR NO.	HARD-WARE GROUP	DIMENSION WIDTH	DIMENSION HEIGHT	DOOR TYPE	DOOR MAT.	DOOR FINISH	DOOR COLOR	FRAME MAT.	FRAME FINISH	FRAME COLOR	DETAILS HEAD	DETAILS TRANSOM	DETAILS JAMB	DETAILS THRESHOLD	DOOR ASSEMBLY RATING	REMARKS	SIGNAGE TEXT	SIGNAGE DETAIL
FIRST FLOOR EXTERIOR DOORS																		
001	18	PR 3'-0"	7'-0"	A	ALUM	F	-	ALUM	F	-		10 8.51	10 8.51	18A 8.51		PANIC HARDWARE, AUTOMATIC DOOR		
002	9	3'-0"	7'-0"	B	HM	-		HM	PSG		9 8.51		14 8.51	18A 8.51				
003	10	3'-0"	7'-0"	B	HM	-		HM	PSG		14 8.51		14 8.51	20 8.51			2,7	11.01
004	10	3'-0"	7'-0"	B	HM	-		HM	PSG		14 8.51		14 8.51	20 8.51	45 MIN		1,6	11.01
005	8A	3'-0"	7'-0"	B	SCN	-		HM	PSG		3B 8.50		3A 8.50	3C 8.50	60 MIN	SG		
005A	8A	3'-0"	7'-0"	B	SCN	-		HM	PSG		3B 8.50		3A 8.50	3C 8.50	60 MIN	SG		
006	44	3'-0"	7'-0"	C	SCN	-		HM	PSG		3B 8.50		3A 8.50	3C 8.50	45 MIN	SG		
007	8	3'-0"	7'-0"	B	HM	-		HM	PSG		9 8.51		14 8.51	18A 8.51	60 MIN			
007A	8	3'-0"	7'-0"	B	HM	-		HM	PSG		9 8.51		14 8.51	18A 8.51	20 MIN			
008	9	3'-0"	7'-0"	B	HM	-		HM	PSG		9 8.51		14 8.51	18A 8.51	45 MIN			
009	18	PR 3'-0"	7'-0"	A	ALUM	F	-	ALUM	F		15 8.51		15 8.51	18A 8.51		PANIC HARDWARE, AUTOMATIC DOOR		
010	2	PR 3'-0"	7'-0"	A	ALUM	F	-	ALUM	F		15 8.51		15 8.51	18A 8.51		PANIC HARDWARE	EXIT ONLY	
011	3	3'-0"	7'-0"	B	HM	-		HM	PSG		9 8.51		14 8.51	18A 8.51		PANIC HARDWARE	EXIT ONLY	
012	3	3'-0"	7'-0"	B	HM	-		HM	PSG		9 8.51		14 8.51	18A 8.51		PANIC HARDWARE	EXIT ONLY	
013	1	PR 3'-0"	7'-0"	A	ALUM	F	-	ALUM	F			10 8.51	13 8.51	18A 8.51		PANIC HARDWARE		
014	4	3'-0"	7'-0"	B	HM	-		HM	PSG		9 8.51		14 8.51	18A 8.51	20 MIN	PANIC HARDWARE		
015	8	3'-0"	7'-0"	B	HM	-		HM	PSG		9 8.51		14 8.51	18A 8.51	20 MIN			
016	1	PR 3'-0"	7'-0"	A	ALUM	F	-	ALUM	F			10 8.51	5 8.51	18A 8.51		PANIC HARDWARE		
025	11	3'-0"	7'-0"	C	HM	-		HM	PSG		9 8.51		14 8.51	18A 8.51				
026	1A	PR 3'-0"	7'-0"	A	ALUM	F	-	ALUM	F			10 8.51	13,15 8.51	18A 8.51				
027	1A	PR 3'-0"	7'-0"	A	ALUM	F	-	ALUM	F			10 8.51	13,15 8.51	18A 8.51		PANIC HARDWARE		
028	11	4'-0"	7'-0"	B	HM	-		HM	PSG		9 8.51		14 8.51	18A 8.51		PANIC HARDWARE		
029	14	PR 3'-6"	7'-2"	B	STL	-		HM	PSG				14 8.51	20		PANIC HARDWARE		
030	41	PR 4'-10"	5'-6"	B	METAL	-							-	-				
031	8	3'-0"	7'-0"	B	HM	-		HM	PSG		9 8.51		14 8.51	18A 8.51	45 MIN			
032	1A	PR 3'-0"	7'-0"	A	ALUM	F	-	ALUM	F			10 8.51	13,15 8.51	18A 8.51		PANIC HARDWARE		
033	14	PR 3'-6"	7'-2"	B	STL	-		HM	PSG				14 8.51					
034	4	3'-0"	7'-0"	C	HM	-		HM	PSG		9 8.51		14 8.51	18A 8.51	45 MIN	PANIC HARDWARE		
036	8	3'-0"	7'-0"	B	HM	-		HM	PSG		9 8.51		14 8.51	18A 8.51	45 MIN			
037	8	3'-0"	7'-0"	B	HM	-		HM	PSG		9 8.51		14 8.51	18A 8.51	20 MIN			
038	11A	3'-0"	7'-0"	C	HM	-		HM	PSG		9 8.51		14 8.51	18A 8.51	45 MIN			
039	8	3'-6"	7'-0"	B	HM	-		HM	PSG		9 8.51		14 8.51	18A 8.51	45 MIN			
040	8	3'-0"	7'-0"	B	HM	-		HM	PSG		9 8.51		14 8.51	18A 8.51	45 MIN			
041	41	PR 4'-10"	5'-6"	J	METAL	-							20 2.03					
042	7A	3'-0"	7'-0"	C	HM	-		HM	PSG		9 8.51		14 8.51	18A 8.51	45 MIN			
043	11	3'-0"	7'-0"	C	HM	-		HM	PSG		9 8.51		14 8.51	18A 8.51				
044	10A	3'-0"	7'-0"	B	HM	-		HM	PSG		14 8.51		14 8.51	20 8.51			1,6	11.01
045	10A	3'-0"	7'-0"	B	HM	-		HM	PSG		14 8.51		14 8.51	20 8.51			2,7	11.01
046	44	3'-0"	7'-0"	B	SCN	-		HM	PSG		3B 8.50		3A 8.50	3C 8.50		SG		
047	13	PR 3'-0"	7'-0"	B	HM	-		HM	PSG		9 8.51		14 8.51	18A 8.51		LOUVERS ABOVE & BELOW AT BOTH DOORS		
048	12	PR 3'-0"	7'-0"	B	HM	-		HM	PSG		9 8.51		14 8.51	18A 8.51	20 MIN			
049	6	PR 3'-0"	7'-0"	C	HM	-		HM	PSG		9 8.51		14 8.51	18A 8.51		PANIC HARDWARE		
050	5	3'-0"	7'-0"	C	HM	-		HM	PSG		9 8.51		14 8.51	18A 8.51		PANIC HARDWARE		
051	11	3'-0"	7'-0"	C	HM	-		HM	PSG		9 8.51		14 8.51	18A 8.51				
052	7	3'-0"	7'-0"	C	HM	-		HM	PSG		9 8.51		14 8.51	18A 8.51				
053	11	3'-0"	7'-0"	C	HM	-		HM	PSG		9 8.51		14 8.51	18A 8.51				
054	7	3'-0"	7'-0"	C	HM	-		HM	PSG		9 8.51		14 8.51	18A 8.51				
055	7	3'-0"	7'-0"	C	HM	-		HM	PSG		9 8.51		14 8.51	18A 8.51				

DOOR SCHEDULE

DOOR NO.	HARD-WARE GROUP	DIMENSION WIDTH	DIMENSION HEIGHT	DOOR TYPE	DOOR MAT.	DOOR FINISH	DOOR COLOR	FRAME MAT.	FRAME FINISH	FRAME COLOR	DETAILS HEAD	DETAILS TRANSOM	DETAILS JAMB	DETAILS THRESHOLD	DOOR ASSEMBLY RATING	REMARKS	SIGNAGE TEXT	SIGNAGE DETAIL
FIRST FLOOR INTERIOR DOORS																		
056	7	3'-0"	7'-0"	C	HM	-		HM	PSG		9 8.51		14 8.51	18A 8.51	45 MIN			
057	8	3'-0"	7'-0"	B	HM	-		HM	PSG		9 8.51		14 8.51	18A 8.51	45 MIN			
058	8	3'-6"	7'-0"	B	HM	-		HM	PSG		9 8.51		14 8.51	18A 8.51	20 MIN			
059	8	3'-0"	7'-0"	B	HM	-		HM	PSG		9 8.51		14 8.51	18A 8.51	20 MIN			
060	13	PR 3'-0"	7'-0"	B	HM	-		HM	PSG		9 8.51		14 8.51	18A 8.51				
⚠																		
101	20	3'-0"	7'-0"	B	SCN	-		HM	PSG		9 8.50		9 8.50	19 8.51			14	11.01
102	20	3'-0"	7'-0"	B	SCN	-		HM	PSG		9 8.50		9 8.50	19 8.51				
103	21	3'-0"	7'-0"	B	SCN	-		HM	PSG		3B 8.50		3A 8.50	3C 8.50		SG		
104	20	3'-0"	7'-0"	B	SCN	-		HM	PSG		9 8.50		9 8.50	19 8.51				
104A	20	3'-0"	7'-0"	B	SCN	-		HM	PSG		9 8.50		9 8.50	19 8.51				
105	22	3'-0"	7'-0"	B	SCN	-		HM	PSG		9 8.50		9, 10 8.50	19 8.51				
106	43	3'-0"	7'-0"	B	SCN	-		HM	PSG		9 8.50		9 8.50	19 8.51		PANIC HARDWARE		
107	22	3'-0"	7'-0"	B	SCN	-		HM	PSG		9 8.50		9, 10 8.50	19 8.51			15	11.01
108	22	3'-0"	7'-0"	B	SCN	-		HM	PSG									
109	22	3'-0"	7'-0"	B	SCN	-		HM	PSG									
110	22	3'-0"	7'-0"	B	SCN	-		HM	PSG									
111	22	3'-0"	7'-0"	B	SCN	-		HM	PSG									
112	22	3'-0"	7'-0"	B	SCN	-		HM	PSG								14	11.01
113	20	3'-0"	7'-0"	B	SCN	-		HM	PSG								15	11.01
114	22	3'-0"	7'-0"	B	SCN	-		HM	PSG									
115	22	3'-0"	7'-0"	B	SCN	-		HM	PSG									
116	22	3'-0"	7'-0"	B	SCN	-		HM	PSG								14	11.01
117	20	3'-0"	7'-0"	B	SCN	-		HM	PSG		9 8.50		9 8.50	19 8.51			15	11.01
118	22	3'-0"	7'-0"	B	SCN	-		HM	PSG		9 8.50		9 8.50	19 8.51				
119	22	3'-0"	7'-0"	B	SCN	-		HM	PSG		9 8.50		9, 10 8.50	19 8.51				
120	22	3'-0"	7'-0"	B	SCN	-		HM	PSG									
121	22	3'-0"	7'-0"	B	SCN	-		HM	PSG									
122	20	3'-0"	7'-0"	B	SCN	-		HM	PSG									
123	45	3'-0"	7'-0"	B	SCN	-		HM	PSG		3B 8.50		3A 8.50	3C 8.50		SG		
124	24	3'-0"	7'-0"	B	SCN	-		HM	PSG		9 8.50		9, 10 8.50				14	11.01
125	20	3'-0"	7'-0"	B	SCN	-		HM	PSG								15	11.01
126	25	3'-0"	7'-0"	B	SCN	-		HM	PSG								15	11.01
127	45	3'-0"	7'-0"	B	SCN	-		HM	PSG		3B 8.50		3A 8.50	3C 8.50		SG	14	11.01
128	34	3'-0"	7'-0"	B	SCN	-		HM	PSG		9 8.50		9 8.50	19 8.51				
129	22	3'-0"	7'-0"	B	SCN	-		HM	PSG		9 8.50		9, 10 8.50	19 8.51			15	11.01
130	22	3'-0"	7'-0"	B	SCN	-		HM	PSG									
131	22	3'-0"	7'-0"	B	SCN	-		HM	PSG									
132	22	3'-0"	7'-0"	B	SCN	-		HM	PSG								14	11.01
133	20	3'-0"	7'-0"	B	SCN	-		HM	PSG									
134	20	3'-0"	7'-0"	B	SCN	-		HM	PSG									
135	26	3'-0"	7'-0"	B	SCN	-		HM	PSG		3B 8.50		3A 8.50	3C 8.50		SG		
136	24	3'-0"	7'-0"	B	SCN	-		HM	PSG		9 8.50		9 8.50	19 8.51			15	11.01
137	24	3'-0"	7'-0"	B	SCN	-		HM	PSG		9 8.50		9 8.50				14	11.01
138	27	3'-0"	7'-0"	B	SCN	-		HM	PSG		9 8.50		9 8.50				14	11.01

BY ASSUMING RESPONSIBILITY FOR ENTRY AND USE OF DOCUMENT

tBP
architecture
planning
interiors
management

LICENSED ARCHITECT VINCENTELLI RENDON, R.A. RICHARD No. C-18861 STATE OF CALIFORNIA

tBP/architecture
1000 Burnett Ave, Suite 140
Concord, CA 94520
ph: 925.246.6419 fx: 925.246.6495

architect

consultant

agency

APPROVED
DIVISION OF THE STATE ARCHITECT
OFFICE OF REGULATION SERVICES
APPL. NO. 02-3173
FILE 2-4-04
DATE 2-4-04

SAN RAMON VALLEY CENTER
CONTRA COSTA COMMUNITY COLLEGE DISTRICT
SAN RAMON, CALIFORNIA

owner

tBP project number : 20212.00
file name: D8-0801.dwg
drawn by: DM checked by:
date: 08-04-04 plot scale: 1:1

Rev:	date:	description:
⚠	08-24-04	DESIGN CLARIFICATIONS

drawing title: DOOR SCHEDULE
building no.:
drawing no.: 8.01
drawing of

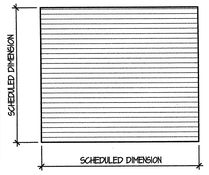

DOOR TYPE A

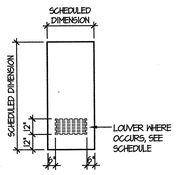

DOOR TYPE B

NOT USED

DOOR TYPE C

NOT USED

DOOR TYPE D

NOT USED

DOOR TYPE E

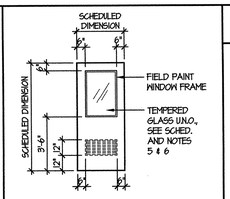

DOOR TYPE F

NOT USED

NOT USED

DOOR TYPE G

NOT USED

DOOR TYPE

NOT USED

DOOR TYPE H

NOT USED

DOOR TYPE I

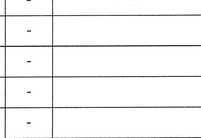

DOOR TYPE J

NOT USED

DOOR TYPE K

ABBREVIATIONS

APP	ACCORDION TYPE PARTITION
ALUM	ALUMINUM
AS	ACID STAIN
ATFD	ACCORDION TYPE FIRE DOOR
DP	DEMOUNTABLE PARTITION
(E)	EXISTING
EEH	EMERGENCY EGRESS HARDWARE
EP	EPOXY PAINT
F	FACTORY FINISH
FFD	FOLDING FABRIC DOOR
FPP	FOLDING PANEL PARTITION
FPWD	FOLDING PANEL WOOD DOOR
GL	GLASS
HCN	HOLLOW CORE NATURAL FINISH
HCP	HOLLOW CORE PAINT FINISH
HM	HOLLOW METAL
LAQ	LACQUER FINISH
MCN	MINERAL CORE NATURAL FINISH
MCP	MINERAL CORE PAINT FINISH
PE	PAINT EGGSHELL
PF	PAINT FLAT
PG	PAINT GLOSS
PSG	PAINT SEMI-GLOSS
S	SEAL
SCN	SOLID CORE NATURAL FINISH
SCP	SOLID CORE PAINT FINISH
SCPL	SOLID CORE PLASTIC LAMINATE
SG	SOUND GASKETED, SEE DETAIL 5/8.50
SF	STAIN FINISH
SST	STAINLESS STEEL
STL	STEEL
UG	UNGLAZED
VF	VARNISH
W	WAX

NOTES

1. DOORS SHALL BE 1-3/4" THICK, UNLESS NOTED OTHERWISE.
2. THE LETTER 'PR' PRECEDING THE 'DOOR WIDTH' DESIGNATION IN THE DOOR SCHEDULE INDICATES PAIR OF DOORS. BOTH DOOR LEAVES ARE THE SAME SIZE, UNLESS NOTED OTHERWISE.
3. THE LETTER 'X' FOLLOWING THE 'DOOR TYPE' LETTER IN THE DOOR SCHEDULE INDICATES A FIXED PANEL ABOVE DOOR LEAF. SCHEDULE DIMENSION INCLUDES PANEL, UNLESS NOTED OTHERWISE.
4. FIXED PANELS SHALL BE OF THE SAME MATERIAL, CONSTRUCTION, AND THICKNESS AS DOOR LEAF, AND SHALL BE PROVIDED BY THE SAME MANUFACTURER, UNLESS NOTED OTHERWISE.
5. THE LETTER 'L' FOLLOWING 'DOOR TYPE' DESIGNATION IN THE DOOR SCHEDULE INDICATES DOORS WITH LOUVERS. SEE DOOR TYPE FOR SIZE OF LOUVER.
6. LOUVERS IN EXTERIOR DOORS SHALL BE VANDAL-PROOF, SECURITY TYPE.
7. GLASS IN ALL FIRE RATED DOORS SHALL BE U.L. LISTED, 1/4" THICK, 45 MINUTE, WIRE GLASS, INSTALLED IN STEEL FRAMES.
8. GLASS IN NON-RATED EXTERIOR DOORS SHALL BE TINTED TEMPERED GLASS.
9. DOOR REQUIREMENTS

   ALL DOORS IN BUILDINGS, INCLUDING, BUT NOT LIMITED TO DOORS OF TOILETS AND STORAGE ROOMS, SHALL CONFORM WITH THE REQUIREMENTS OF THE LATEST EDITION OF THE CALIFORNIA BUILDING CODE:

   - EXIT DOOR SHALL BE OPERABLE FROM THE INSIDE WITHOUT THE USE OF A KEY OR ANY SPECIAL KNOWLEDGE OR EFFORT.
   - HAND ACTIVATED DOOR OPENING HARDWARE SHALL BE CENTERED BETWEEN 30" AND 44" ABOVE FINISH FLOOR.
   - DEAD BOLTS ARE NOT PERMITTED UNLESS OPERABLE WITH A SINGLE EFFORT LEVER TYPE HARDWARE.
   - ALL ROOMS SERVING AN OCCUPANCY LOAD OF 50 OR GREATER AND DOORS LOCATED ON THE DISCHARGE OF EXIT CORRIDORS ARE REQUIRED TO BE PROVIDED WITH PANIC HARDWARE (CBC 1007.3.10).
   - ALL FIRE DOOR LABELS SHALL COMPLY WITH C.B.C. 703.3

10. FOR SIGNAGE TEXT USE ROOM NAMES AS INDICATED ON **FLOOR PLANS**

DOOR SCHEDULE

DOOR NO.	HARD-WARE GROUP	DIMENSION WIDTH	DIMENSION HEIGHT	DOOR TYPE	DOOR MAT.	DOOR FINISH	DOOR COLOR	FRAME MAT.	FRAME FINISH	FRAME COLOR	DETAILS HEAD	DETAILS TRANSOM	DETAILS JAMB	DETAILS THRESHOLD	DOOR ASSEMBLY RATING	REMARKS	SIGNAGE TEXT	SIGNAGE DETAIL
FIRST FLOOR EXTERIOR DOORS																		
CP-101	47	PR 3'-0"	7'-0"	B	STL	F	-	STL	F		14 / 8.51		14 / 8.51	18B / 8.51	20 MIN	LOUVER		
CP-102	48	7'-0"	10'-0"	A	MTL	MTL		MTL	F		4 / 8.51		3 / 8.51	- / -	-	OVERHEAD ROLLING DOOR		
CP-103	48	7'-0"	10'-0"	A	MTL	MTL		MTL	F		4 / 8.51		3 / 8.51	- / -	-	OVERHEAD ROLLING DOOR		
CP-104	12	PR 3'-0"	7'-0"	B	HM	F	-	ALUM	F		14 / 8.51		14 / 8.51	18B / 8.51	20 MIN	LOUVER		
CP-105	08	3'-0"	7'-0"	B	HM	F	-	STL	F		14 / 8.51		14 / 8.51	18B / 8.51	20 MIN	LOUVER		
CP-106	41	PR 3'-0"	7'-0"	J	STL	F	-	STL	F									
CP-110	49	3'-0"	7'-0"	B	HM	-		HM	PSG		9 / 8.50		14 / 8.51	18A / 8.51	20 MIN	LOUVER	UNISEX RESTROOM	6,7 / 11.01
CP-111	39	3'-0"	7'-0"	F	HM	-		HM	PSG		14 / 8.50		14 / 8.50	20 / 8.51	20 MIN	LOUVER		
CP-112	50	3'-0"	7'-0"	B	HM	-		HM	PSG		14 / 8.50		14 / 8.50	20 / 8.51	20 MIN	LOUVER		
CO-113	51	3'-0"	7'-0"	B	HM	-		HM	PSG		14 / 8.50		14 / 8.50	20 / 8.51	20 MIN	LOUVER		
CP-114	34	3'-0"	7'-0"	B	HM	-		HM	PSG		14 / 8.50		14 / 8.50	20 / 8.51	20 MIN	LOUVER		
CP-115	34	3'-0"	7'-0"	B	HM	-		HM	PSG		14 / 8.50		14 / 8.50	20 / 8.51	20 MIN	LOUVER		

CENTRAL PLANT INTERIOR FINISH SCHEDULE

NO.	NAME	FLOOR MATERIALS	BASE MATERIALS	BASE FINISH	EAST WALL MATERIALS	EAST WALL FINISH	SOUTH WALL MATERIALS	SOUTH WALL FINISH	WEST WALL MATERIALS	WEST WALL FINISH	NORTH WALL MATERIALS	NORTH WALL FINISH	CEILING MATERIALS	CEILING FINISH	CEILING HEIGHT	WIN SHADES	REMARKS
FIRST FLOOR																	
101	WORK & STORAGE	F-5	-	-	W-2	PES	W-2	PES	W-2	PES	W-2	PES	C-4	-	VARIES	-	
102	TOILET	F-7	B-1	F	W-3	PES	W-3	PES	W-3	PES	W-3	PES	C-3	PES	10'-0"	-	
103	WORK #1	F-2	B-1	F	W-1	PES	W-1	PES	W-1	PES	W-1	PES	C-1	F	10'-0"	WS-4	
104	CHILLER ROOM	F-5	-	-	W-2	PES	W-2	PES	W-2	PES	W-2	PES	C-4	-	VARIES	-	
105	-	-	-	-	-	-	-	-	-	-	-	-	-	-	-	-	
106	BOILER ROOM	F-5	-	-	W-2	PES	W-2	PES	W-2	PES	W-2	PES	C-4	-	VARIES	-	
107	ELECTRICAL ROOM	F-5	-	-	W-2	PES	W-2	PES	W-2	PES	W-2	PES	C-4	-	VARIES	-	
108	TELEPHONE ROOM	F-5	-	-	W-2	PES	W-2	PES	W-2	PES	W-2	PES	C-4	-	VARIES	-	

FINISH MATERIAL LEGEND

MARK:	MATERIALS:
FLOOR	
F-1	
F-2	VINYL COMPOSITION TILE
F-3	CERAMIC TILE
F-4	VINYL COMPOSITION TILE W/ RESILIENT UNDERLAYMENT
F-5	SEALED CONCRETE SLAB
F-6	
F-7	SHEET VINYL

MARK:	MATERIALS:
BASE	
B-1	4" HIGH RESILIENT BASE
B-2	5" HIGH CERAMIC TILE, ADHESIVE SET O/ CEMENT BACKER BOARD

MARK:	MATERIALS:
WALL	
W-1	5/8" GYPSUM BOARD OVER MTL STUDS
W-2	5/8" TYPE 'X' GYPSUM BOARD OVER MTL STUDS
W-3	5/8" WATER RESISTANCE GYPSUM BOARD OVER MTL STUDS
W-4	48" HIGH CERAMIC TILE WAINSCOT ADHESIVE SET OVER CEMENT BACKER BOARD OR 'WR' GYP. BD., OVER MTL STUDS
W-5	GYP BD- TAPE ONLY
W-6	5/8" TYPE 'X' GYPSUM BOARD- TAPE ONLY

MARK:	MATERIALS:
CEILING	
C-1	24" X 48" SUSPENDED ACOUSTIC PANEL CEILING
C-2	SUSPENDED GYPSUM BOARD
C-3	WATER RESISTANT GYPSUM BOARD
C-4	OPEN TO STRUCTURE ABOVE

MARK:	MATERIALS:
WINDOW SHADES	
WS-1	MANUAL WINDOW SHADE, SEE DETAIL
WS-2	MANUAL WINDOW SHADE (BLACK-OUT BLIND), SEE DETAIL
WS-3	MOTORIZED WINDOW SHADE, SEE DETAIL
WS-4	HORIZONTAL "MINI" BLIND, SEE DETAIL

GENERAL NOTES

ABBREVIATIONS

AC	ACOUSTICAL CEILING
AFF	ABOVE FINISH FLOOR
BD	BOARD
CMT	CERAMIC MOSAIC TILE
CMU	CONCRETE MASONRY UNIT
CONC	CONCRETE
CT	CERAMIC TILE
EPXY	EPOXY
EXPSD	EXPOSED
F	FACTORY FINISH
FRP	FIBER REINFORCED PLASTIC PANEL
GL	GLASS
GYP	GYPSUM
MTL	METAL
EP	EPOXY PAINT
PES	PAINT EGG SHELL
PF	PAINT FLAT
PCB	PAINT CEILING BLACK
PG	PAINT GLOSS
PNL	PANEL
PSG	PAINT SEMI GLOSS
QT	QUARRY TILE
RESIL	RESILIENT
SF	SATIN FINISH
SLR	SEALER
SV	SHEET VINYL
TO	TAPE ONLY
VCT	VINYL COMPOSITION TILE
VFWC	VINYL FABRIC WALL COVERING

DO NOT SCALE DRAWINGS - REFER TO FIGURED DIMENSIONS

tBP
architecture
planning
interiors
management

LICENSED ARCHITECT RENEWAL 10/31/2021 No. C-31886 STATE OF CALIFORNIA

tBP/architecture
1000 Burnett Ave, Suite 140
Concord, CA 94520
ph: 925.246.6419 fx: 925.246.6495

architect

consultant

IDENTIFICATION STAMP
DIV. OF THE STATE ARCHITECT
OFFICE OF REGULATION SERVICES
APPL. NO. 420719
DATE 12/5/13

agency

SAN RAMON VALLEY CENTER
CONTRA COSTA COMMUNITY COLLEGE DISTRICT
SAN RAMON, CALIFORNIA

owner

tBP project number : 20212.00
file name: D11-0801.dwg
drawn by: DM checked by:
date: 03-01-04 plot scale: 1:1

Rev:	date:	description:

drawing title: DOOR AND FINISH SCHEDULE
building no.:
drawing no.: 8.01 CP
drawing of

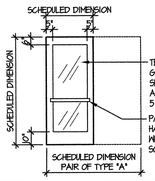

DOOR TYPE A EXTERIOR STOREFRONT

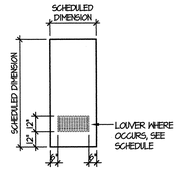

DOOR TYPE B EXTERIOR DOOR

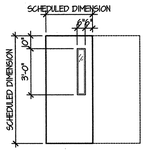

DOOR TYPE C EXTERIOR CLASSROOM DOOR

(NOT USED)

DOOR TYPE D

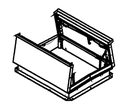

DOOR TYPE E INTERIOR DOOR W/ SIDE LIGHT

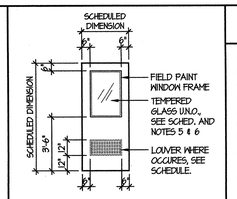

DOOR TYPE F INTERIOR DOOR W/ WINDOW

(NOT USED)

DOOR TYPE G

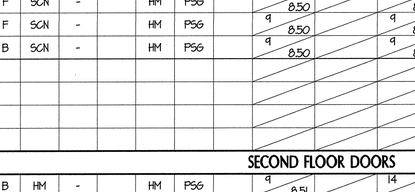

DOOR TYPE H CLOSET SLIDING DOORS

(NOT USED)

DOOR TYPE I

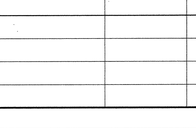

DOOR TYPE J EXTERIOR GATES

(NOT USED)

DOOR TYPE K

ABBREVIATIONS

AFP	ACCORDION TYPE PARTITION
ALUM	ALUMINUM
AS	ACID STAIN
ATFD	ACCORDION TYPE FIRE DOOR
DP	DEMOUNTABLE PARTITION
(E)	EXISTING
EEH	EMERGENCY EGRESS HARDWARE
EP	EPOXY PAINT
F	FACTORY FINISH
FFD	FOLDING FABRIC DOOR
FPP	FOLDING PANEL PARTITION
FPWD	FOLDING PANEL WOOD DOOR
GL	GLASS
HCN.	HOLLOW CORE NATURAL FINISH
HCP	HOLLOW CORE PAINT FINISH
HM.	HOLLOW METAL
LAQ	LACQUER FINISH
MCN.	MINERAL CORE NATURAL FINISH
MCP	MINERAL CORE PAINT FINISH
PE	PAINT EGGSHELL
PF	PAINT FLAT
PG	PAINT GLOSS
PS	PREFINISHED STEEL
PSG.	PAINT SEMI-GLOSS
S.	SEAL
SCN.	SOLID CORE NATURAL FINISH
SCP	SOLID CORE PAINT FINISH
SCPL.	SOLID CORE PLASTIC LAMINATE
SG	SOUND GASKETED, SEE DETAIL 5/8.50
SF	STAIN FINISH
SST	STAINLESS STEEL
STL	STEEL
UG.	UNGLAZED
VF.	VARNISH
W	WAX

NOTES

1. DOORS SHALL BE 1-3/4" THICK, UNLESS NOTED OTHERWISE.
2. THE LETTER 'PR' PRECEDING THE 'DOOR WIDTH' DESIGNATION IN THE DOOR SCHEDULE INDICATES PAIR OF DOORS. BOTH DOOR LEAVES ARE THE SAME SIZE, UNLESS NOTED OTHERWISE.
3. THE LETTER 'X' FOLLOWING THE 'DOOR TYPE' LETTER IN THE DOOR SCHEDULE INDICATES A FIXED PANEL ABOVE DOOR LEAF. SCHEDULE DIMENSION INCLUDES PANEL, UNLESS NOTED OTHERWISE.
4. FIXED PANELS SHALL BE OF THE SAME MATERIAL, CONSTRUCTION, AND THICKNESS AS DOOR LEAF, AND SHALL BE PROVIDED BY THE SAME MANUFACTURER, UNLESS NOTED OTHERWISE.
5. THE LETTER 'L' FOLLOWING 'DOOR TYPE' DESIGNATION IN THE DOOR SCHEDULE INDICATES DOORS WITH LOUVERS. SEE DOOR TYPE FOR SIZE OF LOUVER.
6. LOUVERS IN EXTERIOR DOORS SHALL BE VANDAL-PROOF, SECURITY TYPE.
7. GLASS IN ALL FIRE RATED DOORS SHALL BE U.L. LISTED, 1/4" THICK, 45 MINUTE, WIRE GLASS, INSTALLED IN STEEL FRAMES.
8. GLASS IN NON-RATED EXTERIOR DOORS SHALL BE TINTED TEMPERED GLASS.
9. DOOR REQUIREMENTS

   ALL DOORS IN BUILDINGS, INCLUDING, BUT NOT LIMITED TO DOORS OF TOILETS AND STORAGE ROOMS, SHALL CONFORM WITH THE REQUIREMENTS OF THE LATEST EDITION OF THE CALIFORNIA BUILDING CODE:

   - EXIT DOOR SHALL BE OPERABLE FROM THE INSIDE WITHOUT THE USE OF A KEY OR ANY SPECIAL KNOWLEDGE OR EFFORT.
   - HAND ACTIVATED DOOR OPENING HARDWARE SHALL BE CENTERED BETWEEN 30" AND 44" ABOVE FINISH FLOOR.
   - DEAD BOLTS ARE NOT PERMITTED UNLESS OPERABLE WITH A SINGLE EFFORT LEVER TYPE HARDWARE.
   - ALL ROOMS SERVING AN OCCUPANCY LOAD OF 50 OR GREATER AND DOORS LOCATED ON THE DISCHARGE OF EXIT CORRIDORS ARE REQUIRED TO BE PROVIDED WITH PANIC HARDWARE (CBC 1007.3.10).
   - ALL FIRE DOOR LABELS SHALL COMPLY WITH C.B.C. 7.3.3

10. FOR SIGNAGE TEXT USE ROOM NAMES AS INDICATED ON **FLOOR PLANS**

DOOR SCHEDULE

DOOR NO.	HARDWARE GROUP	DIMENSION WIDTH	DIMENSION HEIGHT	DOOR TYPE	DOOR MAT.	DOOR FINISH	DOOR COLOR	FRAME MAT.	FRAME FINISH	FRAME COLOR	DETAILS HEAD	DETAILS TRANSOM	DETAILS JAMB	DETAILS THRESHOLD	DOOR ASSEMBLY RATING	REMARKS	SIGNAGE TEXT	SIGNAGE DETAIL
FIRST FLOOR INTERIOR DOORS CONT..																		
150	25	3'-0"	7'-0"	F	SCN	-		HM	PSG		9 / 8.5D		9 / 8.5D	19 / 8.5I				14 / 11.01
151	25	3'-0"	7'-0"	F	SCN	-		HM	PSG		〃		〃	〃				〃
152	25	3'-0"	7'-0"	F	SCN	-		HM	PSG		〃		〃	〃				〃
153	25	3'-0"	7'-0"	F	SCN	-		HM	PSG		〃		〃	〃				〃
154	20	3'-0"	7'-0"	F	SCN	-		HM	PSG		〃		〃	〃				〃
155	20	3'-0"	7'-0"	F	SCN	-		HM	PSG		〃		〃	〃				〃
156	40	4'-10"	7'-0"	H	SCN	-		METAL	PSG		13 / 8.5D		13 / 8.5D					
157	20	3'-0"	7'-0"	B	SCN	-		HM	PSG		9 / 8.5D		9 / 8.5D					14 / 11.01
158	43	3'-0"	7'-0"	B	SCN	-		HM	PSG		9 / 8.5D		9 / 8.5D			PANIC HARDWARE	EMERGENCY EXIT ONLY	〃
159	20	3'-0"	7'-0"	F	SCN	-		HM	PSG		9 / 8.5D		9 / 8.5D					〃
160	20	3'-0"	7'-0"	F	SCN	-		HM	PSG		9 / 8.5D		9 / 8.5D					〃
161	30	3'-0"	7'-0"	F	SCN	-		HM	PSG		9 / 8.5D		9 / 8.5D	19 / 8.5I				〃
162	30	3'-0"	7'-0"	F	SCN	-		HM	PSG		9 / 8.5D		9 / 8.5D	19 / 8.5I				〃
163	20	3'-0"	7'-0"	B	SCN	-		HM	PSG		9 / 8.5D		9 / 8.5D		20 MIN			〃
164	31	3'-0"	7'-0"	B	SCN	-		HM	PSG		9 / 8.5D		9 / 8.5D					〃
165	31	3'-0"	7'-0"	B	SCN	-		HM	PSG		9 / 8.5D		9 / 8.5D					〃
166	32	3'-0"	7'-0"	B	SCN	-		HM	PSG		9 / 8.5D		9 / 8.5D					8.10 / 11.01
167																		
168	30	3'-0"	7'-0"	F	SCN	-		HM	PSG		9 / 8.5D		9 / 8.5D	19 / 8.5I				14 / 11.01
169	30	3'-0"	7'-0"	F	SCN	-		HM	PSG		9 / 8.5D		9 / 8.5D	19 / 8.5I				〃
170	34	2'-8"	7'-0"	B	SCN	-		HM	PSG		9 / 8.5D		9 / 8.5D	19 / 8.5I				〃
SECOND FLOOR DOORS																		
201	9	3'-0"	7'-0"	B	HM	-		HM	PSG		9 / 8.5D		14 / 8.5D	18A / 8.5I				
202	7	3'-0"	7'-0"	B	HM	-		HM	PSG		9 / 8.5D		14 / 8.5D	18A / 8.5I				
203	15	PR 3'-0"	7'-0"	B	HM	-		HM	PSG		9 / 8.5D		14 / 8.5D	18A / 8.5I	20 MIN			
204	11	3'-0"	7'-0"	B	HM	-		HM	PSG		9 / 8.5D		14 / 8.5D	18A / 8.5I				
205	16	PR 3'-0"	7'-0"	F	HM	-		HM	PSG		9 / 8.5D		14 / 8.5D	18A / 8.5I	20 MIN	PANIC HARDWARE		
206	16	PR 3'-0"	7'-0"	C	HM	-		HM	PSG		9 / 8.5D		14 / 8.5D	18A / 8.5I		PANIC HARDWARE		
207	11A	3'-0"	7'-0"	C	HM	-		HM	PSG		9 / 8.5D		14 / 8.5D	18A / 8.5I	45 MIN			
208	16A	PR 3'-0"	7'-0"	A	HM	PE5		HM	PE5		10 / 8.5I		13 / 8.5I	18A / 8.5I	45 MIN	PANIC HARDWARE		
209	11A	3'-0"	7'-0"	C	HM	-		HM	PSG		9 / 8.5D		14 / 8.5D	18A / 8.5I	45 MIN			
210	11A	3'-0"	7'-0"	C	HM	-		HM	PSG						45 MIN			
211	11A	3'-0"	7'-0"	C	HM	-		HM	PSG						45 MIN			
212	11A	3'-0"	7'-0"	C	HM	-		HM	PSG						45 MIN			
213	8	3'-0"	7'-0"	B	HM	-		HM	PSG						45 MIN			
214	4	3'-0"	7'-0"	C	HM	-		HM	PSG						45 MIN	PANIC HARDWARE		
215	8	3'-0"	7'-0"	B	HM	-		HM	PSG						45 MIN			
216	4	3'-0"	7'-0"	C	HM	-		HM	PSG						20 MIN	PANIC HARDWARE		
217	11A	3'-0"	7'-0"	C	HM	-		HM	PSG						20 MIN			
217A	15	PR 3'-0"	7'-0"	B	HM	-		HM	PSG						20 MIN			
217B	15	PR 3'-0"	7'-0"	B	HM	-		HM	PSG						20 MIN			
218	4	3'-0"	7'-0"	C	HM	-		HM	PSG						20 MIN	PANIC HARDWARE		
219	4	3'-0"	7'-0"	C	HM	-		HM	PSG						20 MIN	PANIC HARDWARE		
220	4	3'-0"	7'-0"	C	HM	-		HM	PSG						20 MIN	PANIC HARDWARE		

DOOR SCHEDULE

DOOR NO.	HARDWARE GROUP	DIMENSION WIDTH	DIMENSION HEIGHT	DOOR TYPE	DOOR MAT.	DOOR FINISH	DOOR COLOR	FRAME MAT.	FRAME FINISH	FRAME COLOR	DETAILS HEAD	DETAILS TRANSOM	DETAILS JAMB	DETAILS THRESHOLD	DOOR ASSEMBLY RATING	REMARKS	SIGNAGE TEXT	SIGNAGE DETAIL
SECOND FLOOR DOORS CONT..																		
221	4	3'-0"	7'-0"	C	HM	-		HM	PSG		9 / 8.5I		14 / 8.5I	18A / 8.5I	20 MIN	PANIC HARDWARE		
222	11A	3'-0"	7'-0"	C	HM	-		HM	PSG		9 / 8.5I		14 / 8.5I	18A / 8.5I	20 MIN			
223	4	3'-0"	7'-0"	C	HM	-		HM	PSG		9 / 8.5I		14 / 8.5I	18A / 8.5I	20 MIN	PANIC HARDWARE		
224	4	3'-0"	7'-0"	C	HM	-		HM	PSG		9 / 8.5I		14 / 8.5I	18A / 8.5I	20 MIN	PANIC HARDWARE		
225	17	3'-0"	7'-0"	B	HM	-		HM	PSG		14 / 8.5D		14 / 8.10	19 / 8.10	45 MIN		1.6	11.01
226	17	3'-0"	7'-0"	B	HM	-		HM	PSG		14 / 8.5D		14 / 8.10	19 / 8.10	45 MIN		2.7	11.01
227	9	3'-0"	7'-0"	B	HM	-		HM	PSG		9 / 8.5I		14 / 8.5I	18A / 8.5I				
240	27	3'-0"	7'-0"	B	SCN	-		HM	PSG		9 / 8.5D		9 / 8.5D					14 / 11.01
241	33	3'-0"	7'-0"	B	SCN	-		HM	PSG		14 / 8.5D		14 / 8.5D	20B / 8.5I	20 MIN			1.6 / 11.01
242	33	3'-0"	7'-0"	B	SCN	-		HM	PSG		14 / 8.5D		14 / 8.5D	20B / 8.5I	20 MIN			2.7 / 11.01
243	34	3'-0"	7'-0"	B	SCN	-		HM	PSG		9 / 8.5D		9 / 8.5D		20 MIN			14 / 11.01
244	20	3'-0"	7'-0"	B	SCN	-		HM	PSG		9 / 8.5D		9 / 8.5D					
245	35	PR 3'-0"	7'-0"	B	SCN	-		HM	PSG		3B / 8.5D		3A / 8.5D	3C / 8.5D	20 MIN	PANIC HARDWARE, SG		
246	42	PR 3'-10"	7'-0"	H	SCN	-		HM	PSG		13 / 8.5D		18 / 8.5D					NONE
247	42	PR 3'-10"	7'-0"	H	SCN	-		HM	PSG		13 / 8.5D		18 / 8.5D					NONE
248	46	3'-0"	7'-0"	B	SCN	-		HM	PSG		3B / 8.5D		3A / 8.5D	3C / 8.5D	20 MIN	PANIC HARDWARE, SG		14 / 11.01
249	28	PR 3'-0"	7'-0"	B	SCN	-		HM	PSG		9 / 8.5D		9 / 8.5D					NONE
250	37	3'-0"	7'-0"	B	SCN	-		HM	PSG						20 MIN			14 / 11.01
251	36	3'-0"	7'-0"	B	SCN	-		HM	PSG						20 MIN	PANIC HARDWARE		
252	36	3'-0"	7'-0"	B	SCN	-		HM	PSG						20 MIN	PANIC HARDWARE		
253	37	3'-0"	7'-0"	B	SCN	-		HM	PSG						20 MIN			
254	36	3'-0"	7'-0"	B	SCN	-		HM	PSG						20 MIN	PANIC HARDWARE		
255	37	3'-0"	7'-0"	B	SCN	-		HM	PSG						20 MIN			
256	36	3'-0"	7'-0"	B	SCN	-		HM	PSG						20 MIN	PANIC HARDWARE		
257	36	3'-0"	7'-0"	B	SCN	-		HM	PSG						20 MIN	PANIC HARDWARE		
258	37	3'-0"	7'-0"	B	SCN	-		HM	PSG						20 MIN			
259	36	3'-0"	7'-0"	B	SCN	-		HM	PSG						20 MIN	PANIC HARDWARE		
260	16	PR 3'-0"	7'-0"	F	HM	-		HM	PSG		9 / 8.5D		9 / 8.5D		1 1/2 HR	PANIC HARDWARE		NONE
261	37	3'-0"	7'-0"	B	SCN	-		HM	PSG		9 / 8.5D		9 / 8.5D		20 MIN			14 / 11.01
262	37	3'-0"	7'-0"	B	SCN	-		HM	PSG		9 / 8.5D		9 / 8.5D		20 MIN			
263	36	3'-0"	7'-0"	B	SCN	-		HM	PSG		9 / 8.5D		9 / 8.5D		20 MIN	PANIC HARDWARE		
264	20	3'-0"	7'-0"	B	SCN	-		HM	PSG		9 / 8.5D		9 / 8.5D					
265	38	3'-0"	7'-0"	B	SCN	-		HM	PSG		3B / 8.5D		3A / 8.5D	3C / 8.5D		PANIC HARDWARE, SG	EMERGENCY EXIT ONLY	
266	39	3'-0"	7'-0"	F	SCN	-		HM	PSG		9 / 8.5D		9 / 8.5D		60 MIN			
267	39	3'-0"	7'-0"	F	SCN	-		HM	PSG		9 / 8.5D		9 / 8.5D		60 MIN			
268	39	3'-0"	7'-0"	F	SCN	-		HM	PSG		9 / 8.5D		9 / 8.5D		60 MIN			
269	39	3'-0"	7'-0"	F	SCN	-		HM	PSG		9 / 8.5D		9 / 8.5D		60 MIN			
270	39	3'-0"	7'-0"	F	SCN	-		HM	PSG		9 / 8.5D		9 / 8.5D		60 MIN			

BE ABSOLUTELY DETERMINED TO BUILT PRINT TO DO SCHEDULE

tBP/Architecture
1000 Burnett Ave, Suite 140
Concord, CA 94520
ph: 925.246.6419 fx: 925.246.6495

architect

consultant

APPROVED
-BERKELEY STAMP
DIV. OF STATE ARCHITECT
OFFICE OF REGULATION SERVICES
APPLICATION NO. 01-106319
APPROVED
ACCESS COMPLIANCE
DATE: 6-15-04

agency

SAN RAMON VALLEY CENTER
CONTRA COSTA COMMUNITY COLLEGE DISTRICT
SAN RAMON, CALIFORNIA

owner

tBP project number: 20212.00
file name: DH-0802.dwg
drawn by: DM **checked by:**
date: 03-09-04 **plot scale:** 1:1

Rev:	date:	description:
1	03-24-04	DESIGN CLARIFICATIONS

drawing title: DOOR SCHEDULE
building no.:
drawing no.: 8.02
drawing of

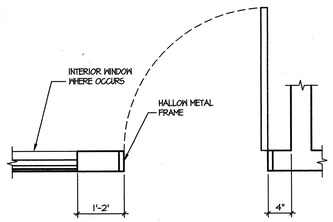

TYPICAL DIMENSIONS N.T.S. 2

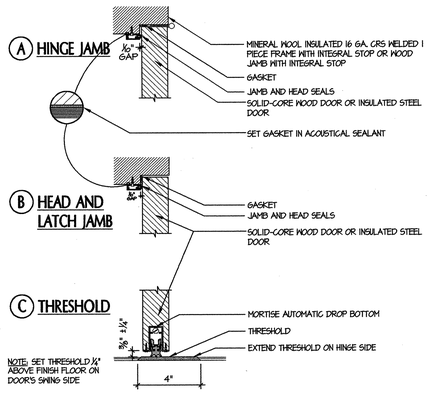

SOUND GASKETED DOOR SCALE: HALF 3

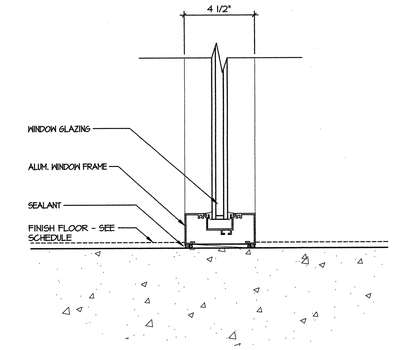

INTERIOR WINDOW SILL SCALE: 3" = 1'-0" 4

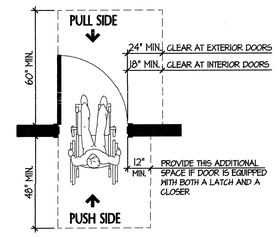

TYPICAL DOOR LANDING CLEARANCES SCALE: NONE 7

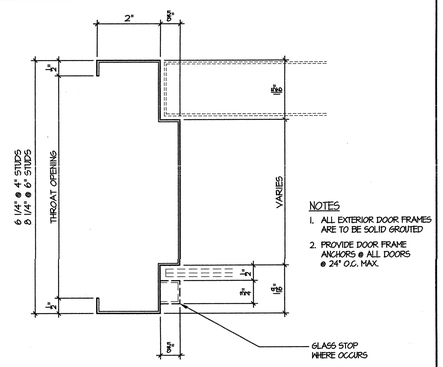

H.M. DOOR/ WINDOW FRAME SCALE: HALF 8

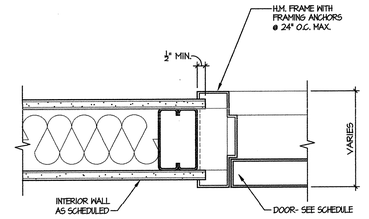

INTERIOR DOOR JAMB (HEAD SIM.) SCALE: 3" = 1'-0" 9

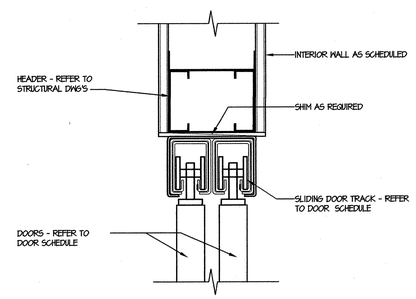

DOOR HEAD - SLIDING SCALE: HALF 13

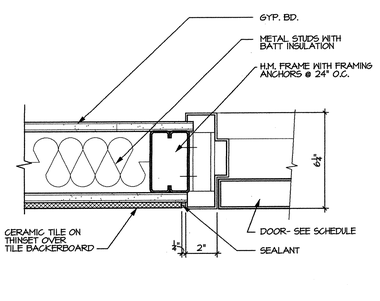

INTERIOR DOOR JAMB @ RESTROOM (HEAD SIM) SCALE: 3" = 1'-0" 14

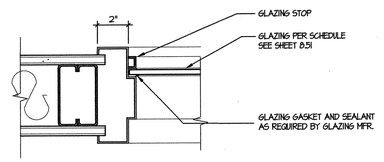

INTERIOR WINDOW JAMB, HEAD SIM. SCALE: 3" = 1'-0" 15a

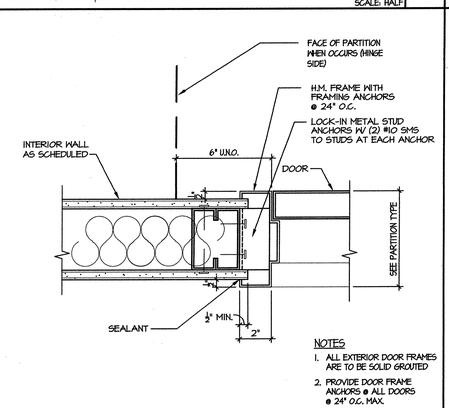

INTERIOR DOOR JAMB (HEAD SIM.) SCALE: 3" = 1'-0" 18

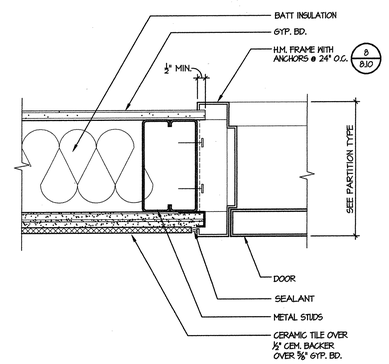

TOILET ROOM JAMB (HEAD SIM) SCALE: 3" = 1'-0" 19

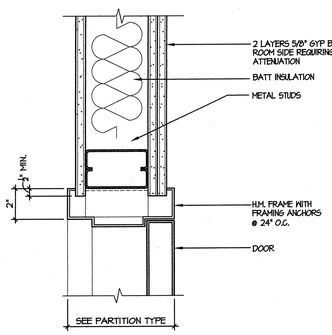

ACOUSTICAL DOOR HEAD (JAMB SIM) SCALE: 3" = 1'-0" 20

THE ARCHITECT IS DETERMINED TO ENJOY HAVING YOU DO BUSINESS

tBP
architecture
planning
interiors
management

LICENSED ARCHITECT VINCENT LEE STATE OF CALIFORNIA No. C-34616

tBP/Architecture
1000 Burnett Ave, Suite 140
Concord, CA 94520
ph: 925.246.6419 fx: 925.246.6495

architect

consultant

APPROVED
DEPARTMENTAL STAMP
DIV. OF FACILITIES DEVELOPMENT
APPL. NO. 10519
BY: [signature]
DATE: 6-7-04

agency

SAN RAMON VALLEY CENTER
CONTRA COSTA COMMUNITY COLLEGE DISTRICT
SAN RAMON, CALIFORNIA

owner

tBP project number : 20212.00
file name: DH-0850.dwg
drawn by: checked by:
date: 03-09-04 plot scale: 1:1

Rev:	date:	description:

drawing title: DOOR DETAILS
building no:

drawing no: 8.50
drawing of

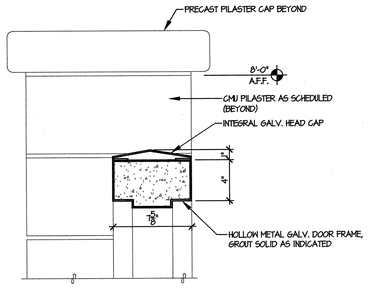

DOOR HEAD AT CMU WALL

SCALE: NONE | 2

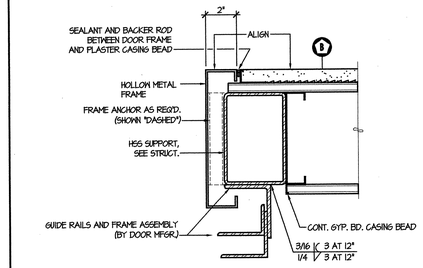

ROLL-UP DOOR JAMB

SCALE: 3" = 1'-0" | 3

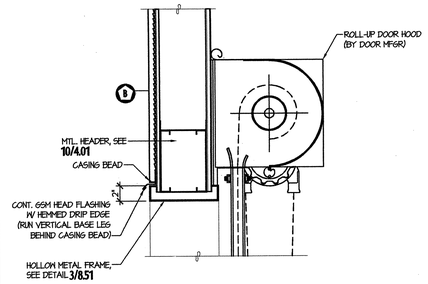

NOTE:
ROLL-UP DOOR SUPPORTED BY JAMB FASTENERS ONLY (NO CONNECTION TO DOOR HEAD REQUIRED) FOR JAMB CONNECTION, SEE DETAIL 3/8.51

ROLL-UP DOOR HEAD

SCALE: 1-1/2" = 1'-0" | 4

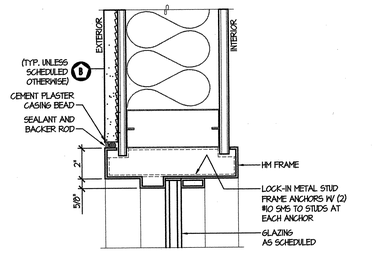

NOTES
1. ALL EXTERIOR DOOR FRAMES ARE TO BE SOLID GROUTED
2. PROVIDE DOOR FRAME ANCHORS AT ALL DOORS AT 24" O.C. MAX.

EXTERIOR HOLLOW METAL WINDOW JAMB

SCALE: 3" = 1'-0" | 5

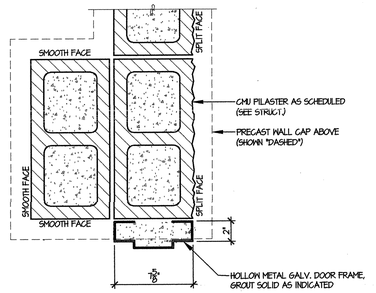

DOOR JAMB AT CMU WALL

SCALE: NONE | 7

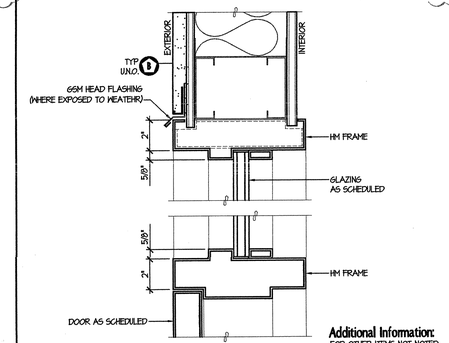

Additional Information:
FOR OTHER ITEMS NOT NOTED SEE DETAIL(S):
9/8.51

(JAMB CONDITION SIMILAR)

EXTERIOR HOLLOW METAL TRANSOM HEAD

SCALE: 3" = 1'-0" | 8

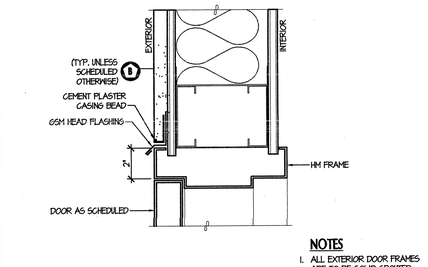

NOTES
1. ALL EXTERIOR DOOR FRAMES ARE TO BE SOLID GROUTED
2. PROVIDE DOOR FRAME ANCHORS AT ALL DOORS AT 24" O.C. MAX.

EXTERIOR HOLLOW METAL DOOR HEAD

SCALE: 3" = 1'-0" | 9

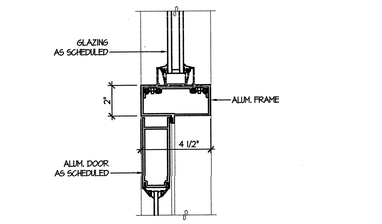

EXTERIOR ALUMINUM DOOR HEAD

SCALE: 3" = 1'-0" | 10

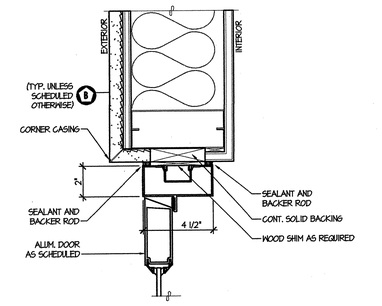

EXTERIOR ALUMINUM DOOR JAMB

SCALE: 3" = 1'-0" | 13

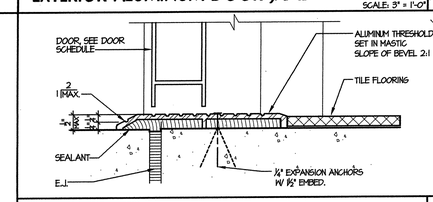

EXTERIOR THERSHOLD

SCALE: HALF | 18a

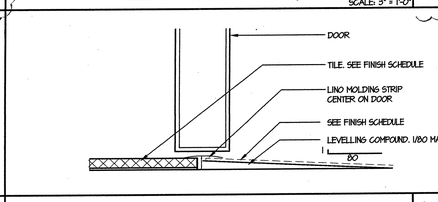

LINO / TILE TRANSITION

SCALE: HALF | 19a

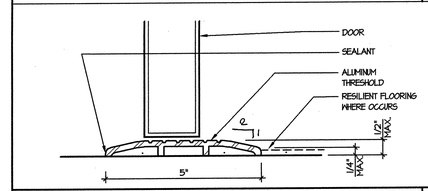

EXTERIOR THERSHOLD

SCALE: HALF | 18b

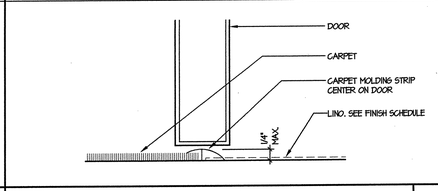

CARPET / LINO TRANSITION

SCALE: HALF | 19b

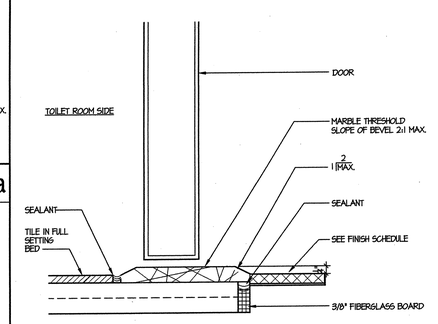

TOILET ROOM THRESHOLD@ TILE

SCALE: HALF | 20b

tBP
architecture
planning
interiors
management

tBP/Architecture
1000 Burnett Ave, Suite 140
Concord, CA 94520
ph: 925.246.6419 fx: 925.246.6495

architect

consultant

APPROVED
DEPARTMENT OF STATE ARCHITECT
DIVISION OF REGULATION SERVICES
APPL. NO. 10-117719
BY: [signature]
DATE: 6-4-04

agency

SAN RAMON VALLEY CENTER
CONTRA COSTA COMMUNITY COLLEGE DISTRICT
SAN RAMON, CALIFORNIA

owner

tBP project number : 2012.00
file name: DTL-0851.DWG
drawn by: SW checked by:
date: 03-04-04 plot scale: 1:1

Rev:	date:	description:
1	03-24-04	DESIGN CLARIFICATIONS

drawing title: DOOR DETAILS
building no:

drawing no: 8.51
drawing of

PLOTTED ON 03/24/2004 AT 9:47:06 AM BY SUSAN WOOD
M:\PROJECTS\2012.00 SRVC\DETAILS\DTL-0851.DWG

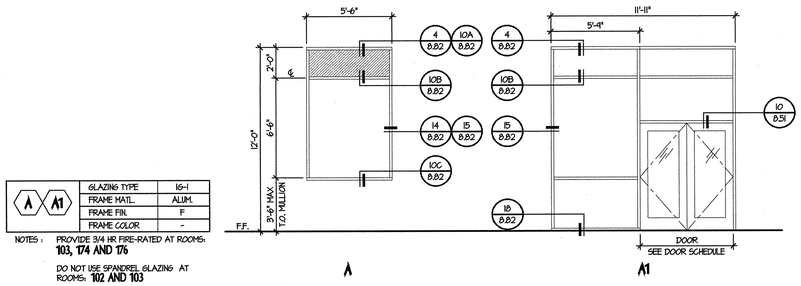

A / A1	
GLAZING TYPE	16-1
FRAME MATL.	ALUM.
FRAME FIN.	F
FRAME COLOR	-

NOTES : PROVIDE 3/4 HR. FIRE-RATED AT ROOMS: **103, 174 AND 176**

DO NOT USE SPANDREL GLAZING AT ROOMS: **102 AND 103**

A

A1

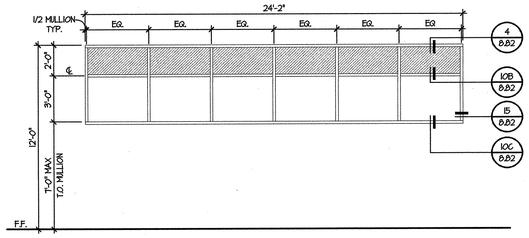

B
GLAZING TYPE	16-1
FRAME MATL.	ALUM.
FRAME FIN.	F
FRAME COLOR	-

NOTES : -

B

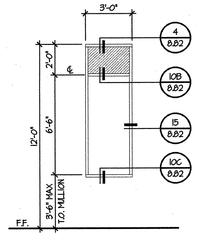

C
GLAZING TYPE	16-1
FRAME MATL.	ALUM.
FRAME FIN.	F
FRAME COLOR	-

NOTES : 3/4 HR FIRE-RATED AT ROOM 210

C

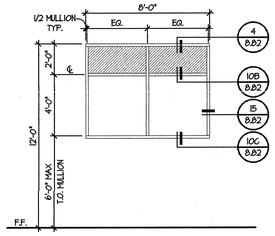

D
GLAZING TYPE	16-1
FRAME MATL.	ALUM.
FRAME FIN.	F
FRAME COLOR	-

NOTES : -

D

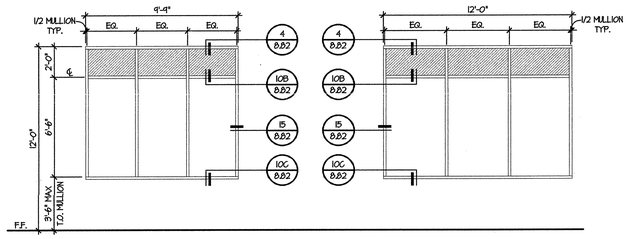

E1 / E2
GLAZING TYPE	16-1
FRAME MATL.	ALUM.
FRAME FIN.	F
FRAME COLOR	-

NOTES : -

E1

E2

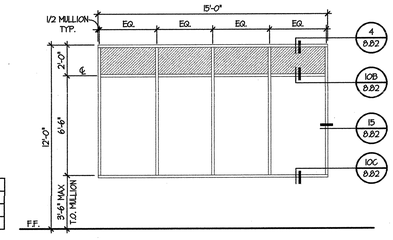

F
GLAZING TYPE	16-1
FRAME MATL.	ALUM.
FRAME FIN.	F
FRAME COLOR	-

NOTES : -

F

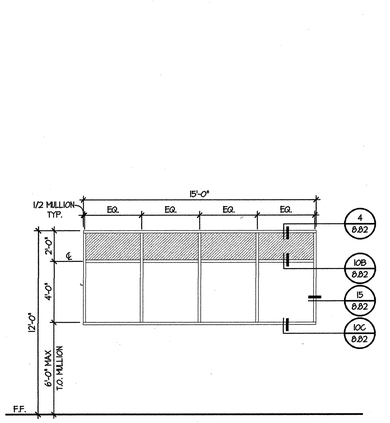

F2
GLAZING TYPE	16-1
FRAME MATL.	ALUM.
FRAME FIN.	F
FRAME COLOR	-

NOTES : -

F2

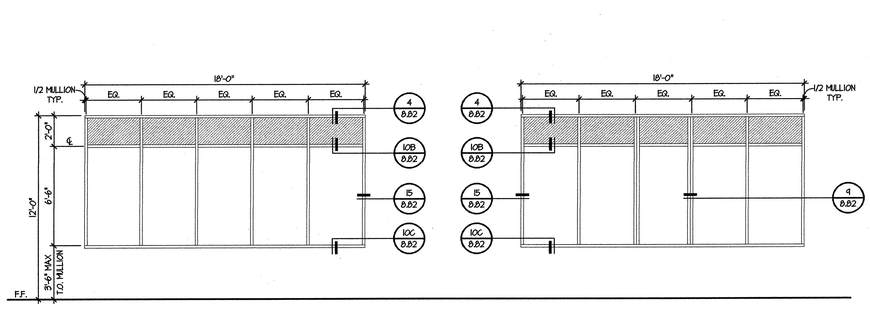

G
GLAZING TYPE	16-1
FRAME MATL.	ALUM.
FRAME FIN.	F
FRAME COLOR	-

G

G1
GLAZING TYPE	16-1
FRAME MATL.	ALUM.
FRAME FIN.	F
FRAME COLOR	-

NOTES : PROVIDE 3/4 HR FIRE-RATED GLAZING AT ROOMS: **235, 237, 238, AND 240**

G1

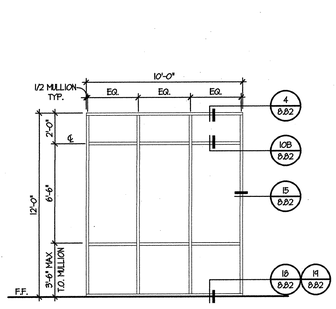

H
GLAZING TYPE	16-1
FRAME MATL.	ALUM.
FRAME FIN.	F
FRAME COLOR	-

NOTES : -

H

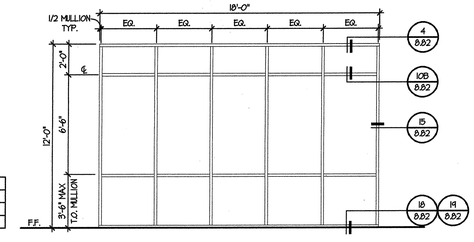

J
GLAZING TYPE	16-1
FRAME MATL.	ALUM.
FRAME FIN.	F
FRAME COLOR	-

NOTES : -

J

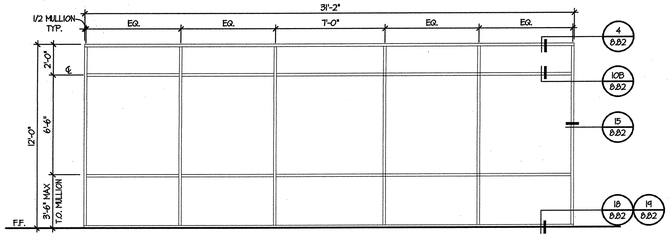

K
GLAZING TYPE	16-1
FRAME MATL.	ALUM.
FRAME FIN.	F
FRAME COLOR	-

NOTES : -

K

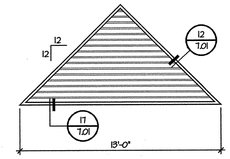

L1
GLAZING TYPE	-
FRAME MATL.	ALUM.
FRAME FIN.	F
FRAME COLOR	-

NOTES : -

L1

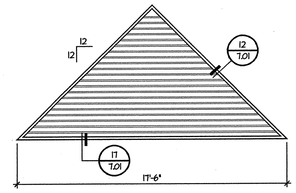

L2
GLAZING TYPE	-
FRAME MATL.	ALUM.
FRAME FIN.	F
FRAME COLOR	-

NOTES : -

L2

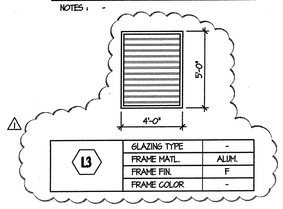

L3
GLAZING TYPE	-
FRAME MATL.	ALUM.
FRAME FIN.	F
FRAME COLOR	-

L3

GENERAL WINDOW AND LOUVER NOTES

1. REFER TO SPECIFICATION SECTION **08800** FOR GLAZING TYPE DESCRIPTIONS
2. PROVIDE TEMPERED "SAFETY" GLASS WHERE REQUIRED BY CODE.
3. VERIFY ALL WINDOW OPENING DIMENSIONS IN FIELD PRIOR TO FABRICATION
4. ACOUSTICAL GLAZING REQUIREMENTS:
   SUBSTITUTE TYPE **"IG-3"** GLAZING FOR TYPE **"IG-1"** IN THE FOLLOWING ROOM LOCATIONS:
   #107, 147, 148, 212, 217, 218, 221 AND 230.
4. SPANDREL GLAZING:
   UNLESS NOTED OTHERWISE, ALL SPANDREL GLAZING (INDICATED BY THIS DELINEATION) IS TO BE TYPE **"IG-2"**



WINDOW AND LOUVER SCHEDULE

SCALE: 1/4" = 1'-0"

BE ABSOLUTELY DETERMINED TO ENJOY WHAT YOU DO (08.04)

tBP/Architecture
1000 Burnett Ave, Suite 140
Concord, CA 94520
ph: 925.246.6419 fx: 925.246.6495

architecture
planning
interiors
management

architect

consultant

agency

SAN RAMON VALLEY CENTER
CONTRA COSTA COMMUNITY COLLEGE DISTRICT
SAN RAMON, CALIFORNIA

owner

tBP project number : 2021.00
file name: DR_0880.dwg
drawn by: DM **checked by:**
date: 03-01-04 **plot scale:** 1:1

Rev:	date:	description:
1	03-29-04	DESIGN CLARIFICATIONS

drawing title: WINDOW & LOUVER SCHEDULE
building no.:
drawing no.: 8.80
drawing of

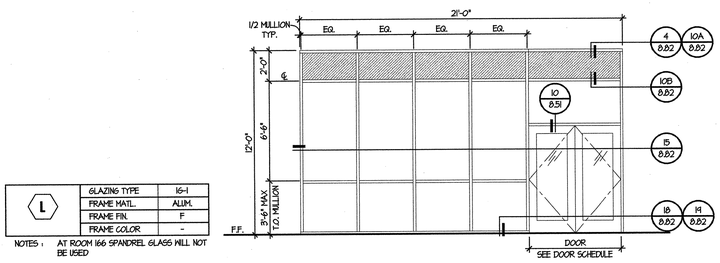

L	GLAZING TYPE	16-1
	FRAME MATL.	ALUM.
	FRAME FIN.	F
	FRAME COLOR	-

NOTES : AT ROOM 166 SPANDREL GLASS WILL NOT BE USED

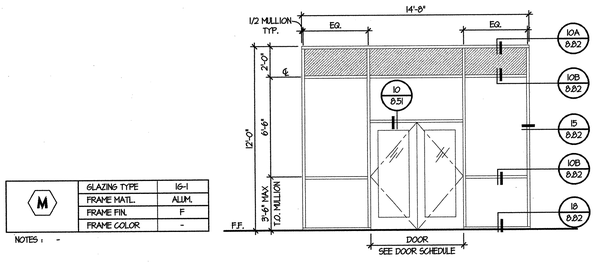

M	GLAZING TYPE	16-1
	FRAME MATL.	ALUM.
	FRAME FIN.	F
	FRAME COLOR	-

NOTES : -

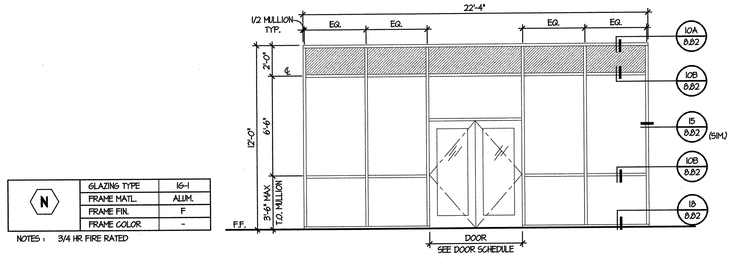

N	GLAZING TYPE	16-1
	FRAME MATL.	ALUM.
	FRAME FIN.	F
	FRAME COLOR	-

NOTES : 3/4 HR FIRE RATED

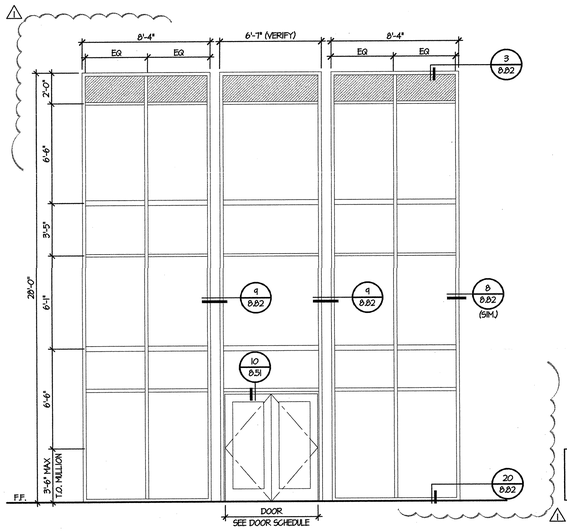

P	GLAZING TYPE	16-1
	FRAME MATL.	ALUM.
	FRAME FIN.	F
	FRAME COLOR	-

NOTES : -

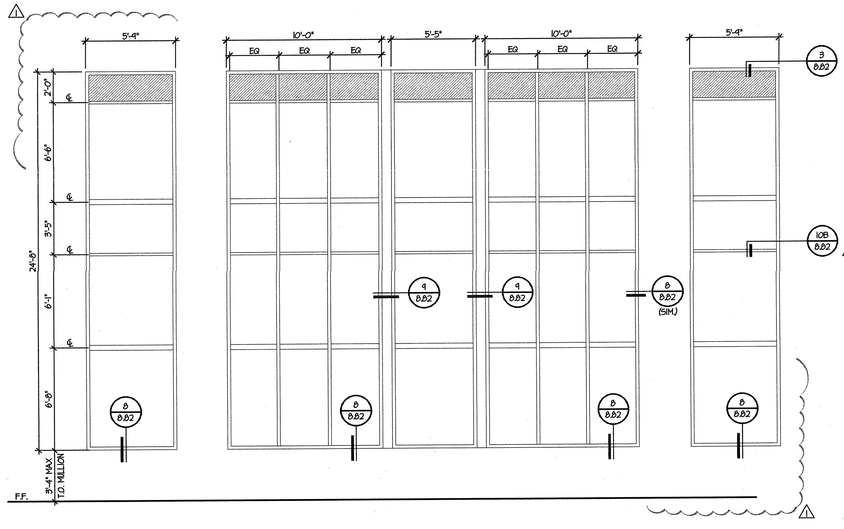

Q	GLAZING TYPE	16-1
	FRAME MATL.	ALUM.
	FRAME FIN.	F
	FRAME COLOR	-

NOTES : -

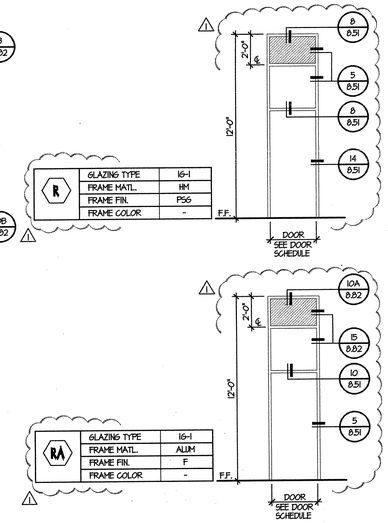

R	GLAZING TYPE	16-1
	FRAME MATL.	HM
	FRAME FIN.	PS6
	FRAME COLOR	-

RA	GLAZING TYPE	16-1
	FRAME MATL.	ALUM
	FRAME FIN.	F
	FRAME COLOR	-

EXTERIOR WINDOWS

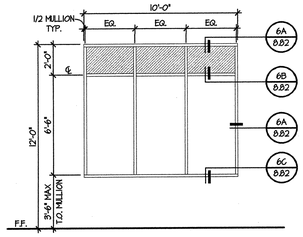

M	GLAZING TYPE	16-1
	FRAME MATL.	ALUM.
	FRAME FIN.	F
	FRAME COLOR	-

NOTES : 3/4 HR FIRE RATED

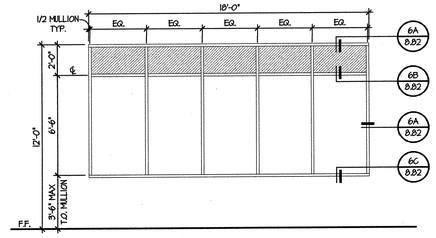

BB	GLAZING TYPE	16-1
	FRAME MATL.	ALUM.
	FRAME FIN.	F
	FRAME COLOR	-

NOTES : 3/4 HR FIRE RATED

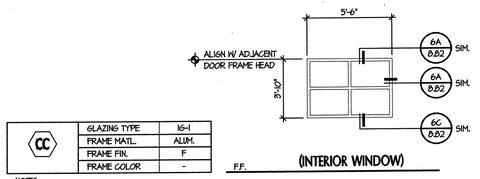

CC	GLAZING TYPE	16-1
	FRAME MATL.	ALUM.
	FRAME FIN.	F
	FRAME COLOR	-

NOTES : -

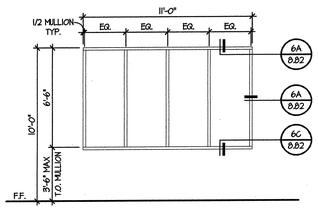

DD	GLAZING TYPE	F6-1
	FRAME MATL.	ALUM.
	FRAME FIN.	F
	FRAME COLOR	-

NOTES : -

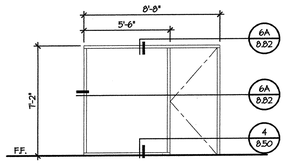

EE	GLAZING TYPE	F6-1
	FRAME MATL.	ALUM.
	FRAME FIN.	F
	FRAME COLOR	-

NOTES : -

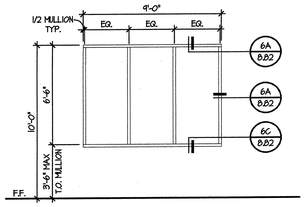

FF	GLAZING TYPE	F6-2
	FRAME MATL.	ALUM.
	FRAME FIN.	F
	FRAME COLOR	-

NOTES : PROVIDE 3/8" THICK LAMINATED GLASS AT ROOM 197

INTERIOR WINDOWS

GENERAL WINDOW AND LOUVER NOTES

1. REFER TO SPECIFICATION SECTION **08800** FOR GLAZING TYPE DESCRIPTIONS
2. PROVIDE TEMPERED "SAFETY" GLASS WHERE REQUIRED BY CODE.
3. VERIFY ALL WINDOW OPENING DIMENSIONS IN FIELD PRIOR TO FABRICATION
4. ACOUSTICAL GLAZING REQUIREMENTS:
   SUBSTITUTE TYPE **"IG-3"** GLAZING FOR TYPE **"IG-1"** IN THE FOLLOWING ROOM LOCATIONS:
   #107, 147, 148, 212, 217, 218, 221 AND 230.
4. SPANDREL GLAZING:
   UNLESS NOTED OTHERWISE, ALL SPANDREL GLAZING (INDICATED BY THIS DELINEATION) IS TO BE TYPE **"IG-2"**



WINDOW AND LOUVER SCHEDULE

SCALE: 1/4" = 1'-0"

BE ABSOLUTELY CERTAIN TO ENJOY MAY 1'08 00:03:40:04

tBP
architecture
planning
interiors
management

tBP/Architecture
1000 Burnett Ave, Suite 140
Concord, CA 94520
ph: 925.246.6419 fx: 925.246.6495

LICENSED ARCHITECT STATE OF CALIFORNIA MARK DAVIS No. C-1985

architect

consultant

APPROVED
BY THE STATE ARCHITECT
OFFICE OF REGULATION SERVICES
APPL NO. 105719
FILE
DATE 6-9-04

agency

SAN RAMON VALLEY CENTER

CONTRA COSTA COMMUNITY COLLEGE DISTRICT

SAN RAMON, CALIFORNIA

owner

tBP project number : 2021.00

file name: D1_0881.dwg

drawn by: DM **checked by:**

date: 03-01-04 **plot scale:** 1:1

Rev.	date:	description:
1	03-24-04	DESIGN CLARIFICATIONS

drawing title: WINDOW SCHEDULE

building no.:

drawing no.: 8.81

drawing of

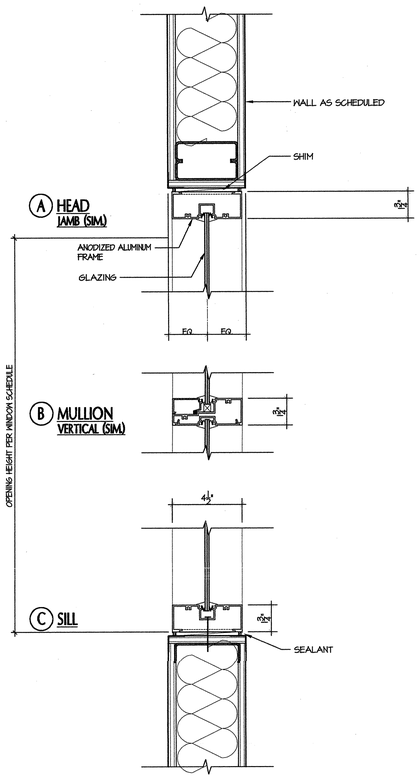

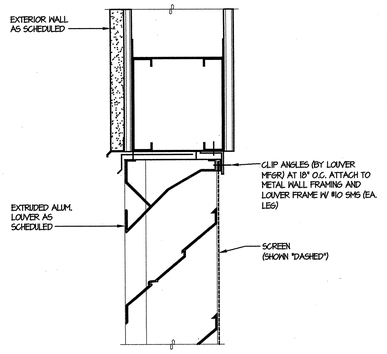

LOUVER - HEAD DETAIL (CENTRAL PLANT) SCALE: 3" = 1'-0" 2

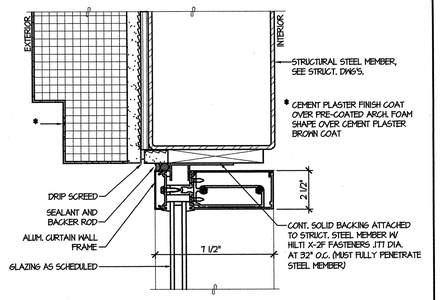

CURTAIN WALL HEAD SCALE: 3" = 1'-0" 3

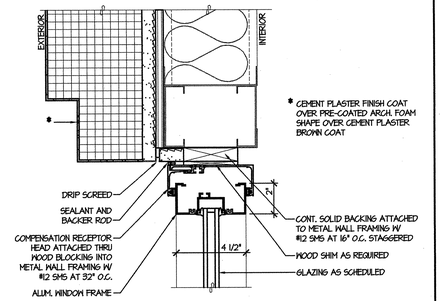

EXTERIOR ALUMINUM WINDOW HEAD SCALE: 3" = 1'-0" 4

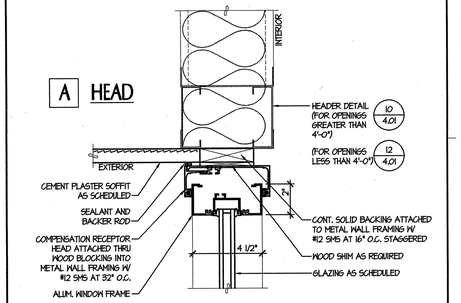

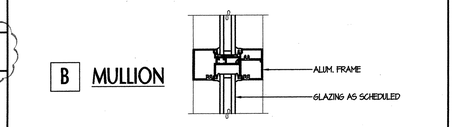

GENERAL NOTE:
WRAP ENTIRE OPENING W/ WATERPROOF MEMBRANE PRIOR TO WINDOW INSTALLATION

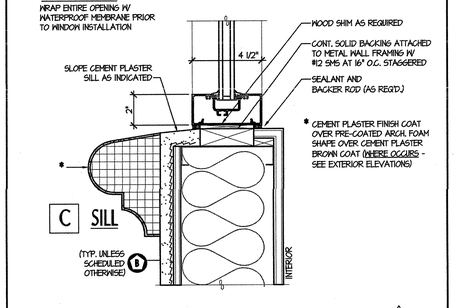

TYPICAL INTERIOR WINDOW DETAIL SCALE: 3" = 1'-0" 6

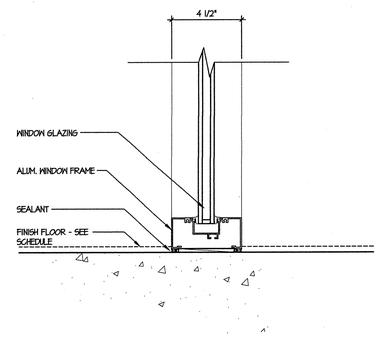

INTERIOR WINDOW SILL SCALE: 3" = 1'-0" 11

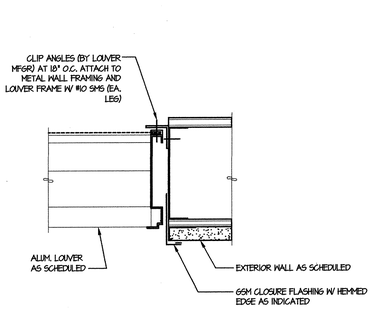

LOUVER - JAMB DETAIL (CENTRAL PLANT) SCALE: 3" = 1'-0" 12

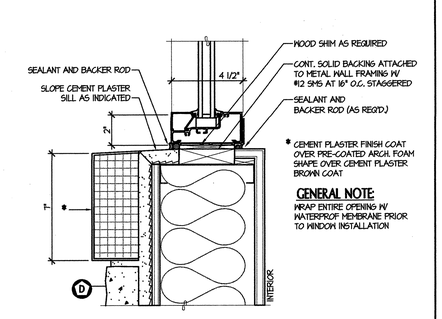

EXTERIOR ALUMINUM WINDOW SILL SCALE: 3" = 1'-0" 13

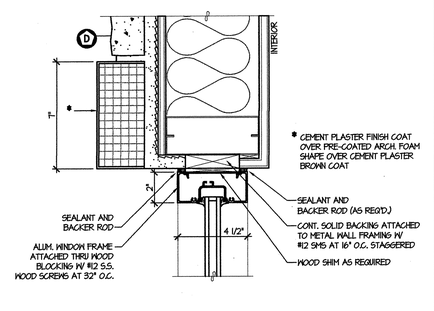

(HEAD CONDITION SIMILAR)

EXTERIOR ALUMINUM WINDOW JAMB SCALE: 3" = 1'-0" 14

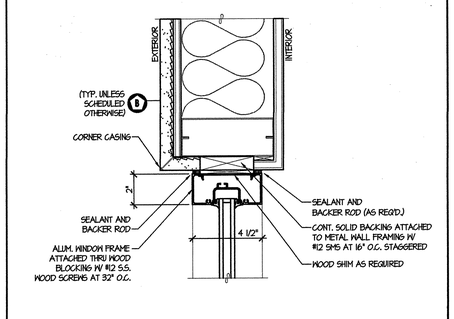

EXTERIOR ALUMINUM WINDOW JAMB SCALE: 3" = 1'-0" 15

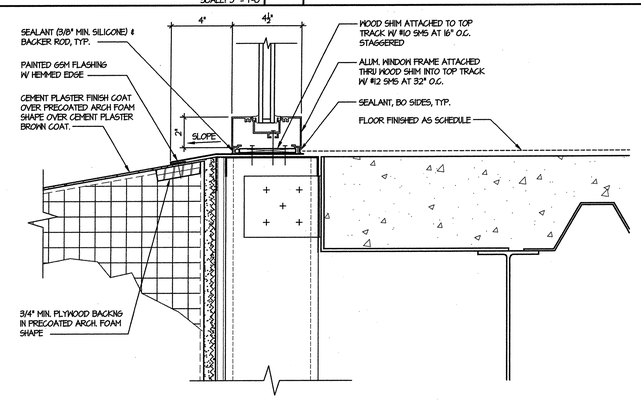

WINDOW SILL @ CORNICE BASE SCALE: 3"=1'-0" 17

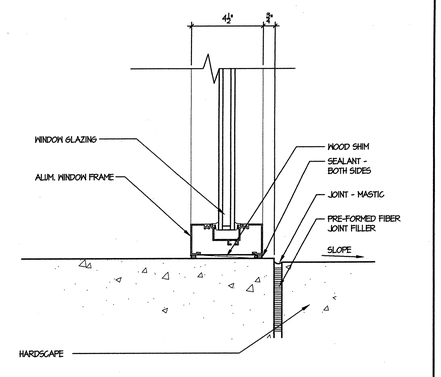

WINDOW SILL @ CONCRETE SCALE: 3" = 1'-0" 18

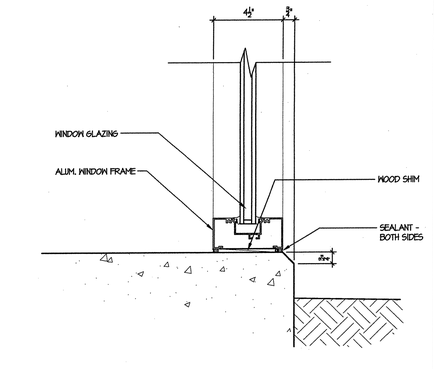

WINDOW SILL @ CONCRETE SCALE: 3" = 1'-0" 19

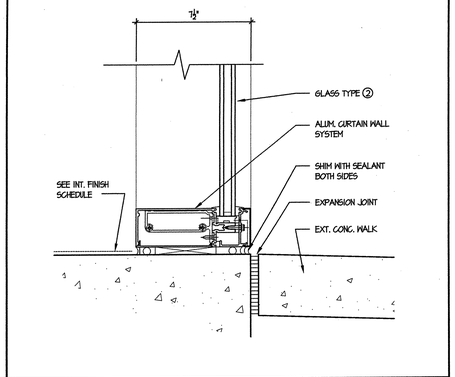

CURTAIN WALL SILL SCALE: 3" = 1'-0" 20

IF ABSOLUTELY DETERMINED TO BE ANY HAVY 03.00 09:24:04

tBP
architecture
planning
interiors
management
LICENSED ARCHITECT VINCENT M. BRUNO RENEWAL 10/31/2005 STATE OF CALIFORNIA
tBP/architecture
1000 Burnett Ave, Suite 140
Concord, CA 94520
ph: 925.246.6419 fx: 925.246.6495

architect

consultant

agency

APPROVED
DEPARTMENT STAMP
DIV. OF THE STATE ARCHITECT
OFFICE OF REGIONS
APP. NO. 10019
BY [signature]
DATE 6-9-04

SAN RAMON VALLEY CENTER
CONTRA COSTA COMMUNITY COLLEGE DISTRICT
SAN RAMON, CALIFORNIA

owner

tBP project number : 20212.00
file name: DTL_882.dwg
drawn by: DM checked by:
date: 03-09-04 plot scale: 1:1

Rev:	date:	description:
1	03-29-04	DESIGN CLARIFICATIONS

drawing title: WINDOW DETAILS
building no:

drawing no: 8.82
drawing of

INTERIOR FINISH SCHEDULE

AREA		FLOOR	BASE		EAST WALL		SOUTH WALL		WEST WALL		NORTH WALL		CEILING			WIN	REMARKS
NO.	NAME	MATERIALS	MATERIALS	FINISH	MATERIALS	FINISH	MATERIALS	FINISH	MATERIALS	FINISH	MATERIALS	FINISH	MATERIALS	FINISH	HEIGHT	SHADES	
FIRST FLOOR																	
101	LIBRARY	F-8 / F-2	B-1	F	W-1	PES	W-1	PES	W-1	PES	W-1	PES	C-1	F	26'-0"	WS-3	-
102	STUDY #1	F-1	B-1	F	W-1	PES	W-1	PES	W-1	PES	W-1	PES	C-4	-	-	WS-4	
103	OFFICE	F-1	B-1	F	W-1	PES	W-1	PES	W-1	PES	W-1	PES	C-4	-	-	WS-4	
104	JANITOR	F-2	-	-	W-5	-	W-5	-	W-5	-	W-5	-	C-4	-	-	-	
105	IDF	F-5	-	-	W-2	PES	W-2	PES	W-2	PES	W-2	PES	C-4	PES	VARIES		
106	MACHINE ROOM	F-5	-	-	W-6	-	W-6	-	W-6	-	W-6	-	C-2	PES	VARIES		
107	AUDIO VISUAL ROOM	F-8	B-1	F	W-1 / W-2	PES	W-1	PES	W-1	PES	W-1	PES	C-1	F	10'-0"	WS-1	
108	WORK AREA	F-1	B-1	F	W-1	PES	W-1	PES	W-1	PES	W-1	PES	C-1	F	10'-0"		
109	STUDY	F-1	B-1	F	W-1	PES	W-1	PES	W-1	PES	W-1	PES	C-1	F	10'-0"	WS-4	
110	STORAGE	F-1	B-1	F	-	-	W-1	PES	W-1	PES	W-1	PES	C-1	F	10'-0"	WS-4	
111	WOMEN'S RESTROOM	F-3	B-2	F	W-4	PSG	W-4	PSG	W-4	PSG	W-4	PSG	C-3	PSG	10'-0"		
112	MEN'S RESTROOM	F-3	B-2	F	W-4	PSG	W-4	PSG	W-4	PSG	W-4	PSG	C-3	PSG	10'-0"		
113	STORAGE	F-5	-	-	W-1	PES	W-1	PES	W-1	PES	W-1	PES	C-4	PES	-		
115	ADMISSIONS/ REGISTRATION	F-7	B-1	F	W-1	PES	W-1	PES	W-1	PES	W-1	PES	C-1	F	10'-0"	WS-4	
117	FACULTY OFFICE	F-1	B-1	F	W-1	PES	W-1	PES	W-1	PES	W-1	PES	C-1	F	10'-0"	WS-4	
118	FACULTY OFFICE	F-1	B-1	F	W-1	PES	W-1	PES	W-1	PES	W-1	PES	C-1	F	10'-0"		
119	FACULTY OFFICE	F-1	B-1	F	W-1	PES	W-1	PES	W-1	PES	W-1	PES	C-1	F	10'-0"		
120	FACULTY OFFICE	F-1	B-1	F	W-1	PES	W-1	PES	W-1	PES	W-1	PES	C-1	F	10'-0"	WS-4	
121	FACULTY OFFICE	F-1	B-1	F	W-1	PES	W-1	PES	W-1	PES	W-1	PES	C-1	F	10'-0"	WS-4	
122	FACULTY OFFICE	F-1	B-1	F	W-1	PES	W-1	PES	W-1	PES	W-1	PES	C-1	F	10'-0"		
123	WORK ROOM	F-1	B-1	F	W-1	PES	W-1	PES	W-1	PES	W-1	PES	C-1	F	10'-0"	WS-4	
124	FACULTY OFFICE	F-1	B-1	F	W-1	PES	W-1	PES	W-1	PES	W-1	PES	C-1	F	10'-0"	WS-4	
125	FACULTY OFFICE	F-1	B-1	F	W-1	PES	W-1	PES	W-1	PES	W-1	PES	C-1	F	10'-0"		
126	HALLWAY	F-1	B-1	F	W-1	PES	W-1	PES	W-1	PES	W-1	PES	C-1	F	10'-0"		
127	FACULTY OFFICE	F-1	B-1	F	W-1	PES	W-1	PES	W-1	PES	W-1	PES	C-1	F	10'-0"		
128	FACULTY LOUNGE	F-2	B-1	F	W-1	PES	W-1 / W-3	PES	W-1	PES	W-1	PES	C-1	F	10'-0"	WS-4	
129	LOBBY	F-1	B-1	F	W-1	PES	W-1	PES	W-1	PES	W-1	PES	C-1	F	10'-0"	WS-4	
130	EXECUTIVE DEAN	F-1	B-1	F	W-1	PES	W-1	PES	W-1	PES	W-1	PES	C-1	F	10'-0"	WS-4	
131	DIVISION DEAN	F-1	B-1	F	W-1	PES	W-1	PES	W-1	PES	W-1	PES	C-1	F	10'-0"	WS-4	
132	BUSINESS MANAGER	F-1	B-1	F	W-1	PES	W-1	PES	W-1	PES	W-1	PES	C-1	F	10'-0"	WS-4	
133	ADMIN OFFICE	F-1	B-1	F	W-1	PES	W-1	PES	W-1	PES	W-1	PES	C-1	F	10'-0"		
134	HALLWAY	F-1	B-1	F	W-1	PES	W-1	PES	W-1	PES	W-1	PES	C-1	F	10'-0"		
135	CONFERENCE	F-1	B-1	F	W-1	PES	W-1	PES	W-1	PES	W-1	PES	C-1	F	10'-0"		
136	STORAGE	F-1	B-1	F	W-1	PES	W-1	PES	W-1	PES	W-1	PES	C-1	F	10'-0"		
137	I.T. ROOM	F-1	B-1	F	W-1	PES	W-1	PES	W-1	PES	W-1	PES	C-1	F	10'-0"	WS-4	
138	HALLWAY	F-1	B-1	F	-	-	W-1	PES	W-2	PES	W-1 / W-2	PES	C-1	F	10'-0"		
139	RISER CLOSET	F-5	-	-	W-6	-	W-6	-	W-6	-	W-6	-	C-4	-	-		
140	ELECTRICAL	F-5	-	-	W-6	PES	W-6	PES	W-6	PES	W-6	PES	C-4	-	-		
141	WOMEN SERVICE	F-1	B-1	F	W-1	PES	W-1	PES	W-1	PES	W-2	PES	C-1	F	10'-0"	WS-4	
142	DSPS OFFICE	F-1	B-1	F	W-1	PES	W-1	PES	W-1	PES	W-2	PES	C-1	F	10'-0"	WS-4	
143	PACE OFFICE	F-1	B-1	F	W-1	PES	W-1	PES	W-1	PES	W-2	PES	C-1	F	10'-0"	WS-4	
144	STUDENT ACTIVITIES OFFICE	F-1	B-1	F	W-1	PES	W-1	PES	W-1	PES	W-2	PES	C-1	F	10'-0"	WS-4	
145	STUDY	F-1	B-1	F	W-1	PES	W-1	PES	W-1	PES	W-2	PES	C-1	F	10'-0"	WS-4	
146	STUDY	F-1	B-1	F	W-1	PES	W-1	PES	W-1	PES	W-2	PES	C-1	F	10'-0"	WS-4	
147	CAREER TRANSFER CENTER	F-1	B-1	F	W-1	PES	W-1	PES	W-1	PES	W-2	PES	C-1	F	10'-0"	WS-4	
148	ASSESSMENT	F-2	B-1	F	W-1	PES	W-1	PES	W-1	PES	W-2	PES	C-1	F	10'-0"	WS-4	
149	STORAGE	F-1	B-1	F	W-1	PES	W-1	PES	W-1	PES	W-1	PES	C-1	F	10'-0"		
150	OPEN OFFICE	F-1	B-1	F	W-1	PES	W-1	PES	W-1	PES	W-1	PES	C-1	F	10'-0"	WS-4	
151	CASH	F-1	B-1	F	W-1	PES	W-1	PES	W-1	PES	W-1	PES	C-1	F	10'-0"	WS-4	
152	PART-TIME FACULTY	F-1	B-1	F	-	-	-	-	W-1	PES	W-2	PES	C-1	F	10'-0"	WS-4	
159	RISER CLOSET	F-5	-	-	W-6	-	W-6	-	W-6	-	W-6	-	C-4	-	-		
160	COMPUTER LAB	F-8	B-1	F	W-1	PES	W-1	PES	W-2	PES	W-1	PES	C-1	F	10'-0"	WS-1	
161	COMPUTER LAB	F-8	B-1	F	W-1	PES	W-1	PES	W-2	PES	W-2	PES	C-1	F	10'-0"	WS-1	
162	COMPUTER LAB	F-8	B-1	F	W-1	PES	W-1	PES	W-1	PES	W-2	PES	C-1	F	10'-0"	WS-1	
163	TECHNOLOGY OFFICE	F-8	B-1	F	W-1	PES	W-1	PES	W-1	PES	W-1	PES	C-1	F	10'-0"	WS-4	
164	BUSINESS LAB	F-1	B-1	F	W-1	PES	W-1 / W-2	PES	W-1	PES	W-1	PES	C-1	F	10'-0"	WS-1	
165	SUPPORT ROOM	F-8	B-1	F	W-1	PES	W-1	PES	W-1	PES	W-1	PES	C-2	PES	10'-0"		
166	ART STUDIO	F-5	B-1	F	W-1 / W-2	PES	W-1 / W-3	PES	W-1	PES	W-2	PES	C-5	PCB	10'-0"	WS-1	
167	STORAGE	F-5	-	-	W-1	PES	W-1	PES	W-1	PES	W-1	PES	C-2	PES	10'-0"		
168	CERAMIC STUDIO	F-5	B-1	F	W-2	PES	W-2	PES	W-1	PES	W-1	PES	C-5	PCB	10'-0"	WS-1	
169	GLAZING ROOM	F-5	-	-	W-2	PES	W-1	PES	W-1	PES	W-2	PES	C-4	-	-		
170	DRYING ROOM	F-5	-	-	W-1	PES	W-1	PES	W-1	PES	W-2	PES	C-4	-	-		
171	ELECTRICAL ROOM	F-5	-	-	W-6	-	W-6	-	W-6	-	W-6	-	C-4	-	-		
172	MACHINE ROOM	F-5	-	-	W-6	-	W-6	-	W-6	-	W-6	-	C-4	-	-		
173	JANITOR	F-5	-	-	W-6	-	W-6	-	W-6	-	W-6	-	C-2	PES	VARIES		
174	LANGUAGE LAB	F-1	B-1	F	W-2	PES	W-2	PES	W-2	PES	W-2	PES	C-1	F	10'-0"	WS-1	
175	TECHNOLOGY OFFICE	F-8	B-1	F	W-2	PES	W-1	PES	W-1	PES	W-1	PES	C-1	F	10'-0"	WS-4	
176	LANGUAGE LAB	F-1	B-1	F	W-1	PES	W-1	PES	W-1	PES	W-1	PES	C-1	F	10'-0"	WS-1	
177	WOMEN'S RESTROOM	F-3	B-2	F	W-4	PES	W-4	PES	W-4	PES	W-4	PES	C-3	PSG	10'-0"		
178	MEN'S RESTROOM	F-3	B-2	F	W-4	PES	W-4	PES	W-4	PES	W-4	PES	C-3	PSG	10'-0"		
179	MECHANICAL ROOM	F-5	-	-	W-5	-	W-5	-	W-6	-	W-5	-	C-4	-	-		
180	MDF	F-5	-	-	W-6	PES	W-6	PES	W-6	PES	W-6	PES	C-4	-	-		
181	PHYSICAL EDUCATION	F-6	B-3	F	W-1 / W-2	PES	W-1	PES	W-1 / W-2	PES	W-1	PES	C-6	PCB	10'-0"	WS-1	
182	STORAGE	F-5	-	-	W-2	PES	W-2	PES	W-2	PES	W-2	PES	C-2	PES	VARIES		
183	MEN'S LOCKERS/SHOWER	F-3	B-2	F	W-1	PES	W-1	PES	W-1	PES	W-1	PES	C-3	PSG	10'-0"		
184	WOMEN'S LOCKERS/SHOWER	F-3	B-2	F	W-1	PES	W-1	PES	W-1	PES	W-1	PES	C-3	PSG	10'-0"		
185	UNISEX TOILET	F-3	B-2	F	W-4	PSG	W-4	PSG	W-4	PSG	W-4	PSG	C-3	PSG	10'-0"		
186	NOT USED	-	-	-	-	-	-	-	-	-	-	-	-	-	-		
187	ENGINEERING LAB	F-1	B-1	F	W-1	PES	W-1	PES	W-1	PES	W-1	PES	C-1	F	10'-0"	WS-1	
188	ENGINEERING LAB	F-1	B-1	F	W-1	PES	W-1	PES	W-1	PES	W-2	PES	C-1	F	10'-0"	WS-1	
189	IDF	F-5	-	-	W-2	PES	W-2	PES	W-2	PES	W-2	PES	C-4	-	-		
190	MACHINE ROOM	F-5	-	-	W-6	-	W-6	-	W-6	-	W-6	-	C-4	-	-		
191	STORAGE	F-5	-	-	W-6	-	W-6	-	W-6	-	W-6	-	C-2	PES	-		
192	STORAGE	F-5	-	-	W-6	-	W-6	-	W-6	-	W-6	-	C-2	PES	VARIES		
193	STORAGE	F-5	-	-	W-6	-	W-6	-	W-6	-	W-6	-	C-2	PES	VARIES		
194	PUMP ROOM	F-5	-	-	W-6	-	W-6	-	W-6	-	W-6	-	C-4	PSG	VARIES		

FINISH MATERIAL LEGEND

MARK: MATERIALS:

FLOOR
- F-1 CARPET TILE
- F-2 VINYL COMPOSITION TILE
- F-3 CERAMIC TILE
- F-4 VINYL COMPOSITION TILE W/ RESILIENT UNDERLAYMENT
- F-5 SEALED CONCRETE SLAB
- F-6 ATHLETIC FLOOR, SEE DETAIL
- F-7 SHEET VINYL
- F-8 CARPET TILE W/ ANTI-STATIC/ ANTI-MICROBIAL

BASE
- B-1 4" HIGH RESILIENT BASE
- B-2 5" HIGH CERAMIC TILE, ADHESIVE SET O/ CEMENT BACKER BOARD
- B-3 WOOD BASE
- B-4 INTEGRAL COVE BASE

WALL
- W-1 5/8" GYPSUM BOARD OVER MTL STUDS
- W-2 5/8" TYPE 'X' GYPSUM BOARD OVER MTL STUDS
- W-3 5/8" WATER RESISTANCE GYPSUM BOARD OVER MTL STUDS
- W-4 48" HIGH CERAMIC TILE MAINSCOT ADHESIVE SET OVER CEMENT BACKER BOARD OR 'WR' GYP. BD., OVER MTL STUDS
- W-5 GYP BD- TAPE ONLY
- W-6 5/8" TYPE 'X' GYPSUM BOARD- TAPE ONLY
- W-7 CEMENT PLASTER ⚠
- W-8 PLASTIC PANELING

CEILING
- C-1 24" X 48" SUSPENDED ACOUSTIC PANEL CEILING
- C-2 SUSPENDED GYPSUM BOARD
- C-3 WATER RESISTANT GYPSUM BOARD
- C-4 OPEN TO STRUCTURE ABOVE
- C-5 48" X 48" SUSPENDED CEILING GRID FRAME ONLY
- C-6 24" X 48" SUSPENDED CEILING GRID FRAME ONLY
- C-7 CEMENT PLASTER
- C-8 CEMENT PLASTER ⚠

WINDOW SHADES
- WS-1 MANUAL WINDOW SHADE, SEE DETAIL 13/5.01
- WS-2 MANUAL WINDOW SHADE (BLACK-OUT BLIND), SEE DETAIL 13/5.01
- WS-3 MOTORIZED WINDOW SHADE, SEE DETAIL
- WS-4 HORIZONTAL "MINI" BLIND, SEE DETAIL

GENERAL NOTES

ABBREVIATIONS

AC	ACOUSTICAL CEILING	PCB	PAINT CEILING BLACK
AFF	ABOVE FINISH FLOOR	PG	PAINT GLOSS
BD	BOARD	PNL	PANEL
CMT	CERAMIC MOSAIC TILE	PSG	PAINT SEMI GLOSS
CMU	CONCRETE MASONRY UNIT	QT	QUARRY TILE
CONC	CONCRETE	RESIL	RESILIENT
CT	CERAMIC TILE	SF	SATIN FINISH
EPXY	EPOXY	SLR	SEALER
EXPSD	EXPOSED	SV	SHEET VINYL
F	FACTORY FINISH	TO	TAPE ONLY
FRP	FIBER REINFORCED PLASTIC PANEL	VCT	VINYL COMPOSITION TILE
GL	GLASS	VFWC	VINYL FABRIC WALL COVERING
GYP	GYPSUM		
MTL	METAL		
EP	EPOXY PAINT		
PES	PAINT EGG SHELL		
PF	PAINT FLAT		

ALL ASSEMBLIES DETERMINED TO MEET MIN. STC 50 PER 2004 CBC

tBP/Architecture
1000 Burnett Ave, Suite 140
Concord, CA 94520
ph: 925.246.6419 fx: 925.246.6495

architect

consultant

APPROVED
DIVISION OF THE STATE ARCHITECT
OFFICE OF REGIONAL SERVICES
APPL NO. 140719
BY
DATE 6-9-04

agency

SAN RAMON VALLEY CENTER
CONTRA COSTA COMMUNITY COLLEGE DISTRICT
SAN RAMON, CALIFORNIA

owner

tBP project number : 20212.00
file name: DII-0901.dwg
drawn by: checked by:
date: 03-09-04 plot scale: 1:1

Rev:	date:	description:
⚠	03-24-04	DESIGN CLARIFICATIONS

drawing title: building no.:
FINISH SCHEDULE

drawing no.:
9.01
drawing of

NOT USED

INTERIOR FINISH SCHEDULE

NO.	NAME	FLOOR MATERIALS	BASE MATERIALS	BASE FINISH	EAST WALL MATERIALS	EAST WALL FINISH	SOUTH WALL MATERIALS	SOUTH WALL FINISH	WEST WALL MATERIALS	WEST WALL FINISH	NORTH WALL MATERIALS	NORTH WALL FINISH	CEILING MATERIALS	CEILING FINISH	CEILING HEIGHT	WIN SHADES	REMARKS
	SECOND FLOOR																
201	SERVER	F-8	B-1	F	W-1 / W-2	PES	W-1	PES	W-1	PES	W-1 / W-2	PES	C-1	F	10'-0"	WS-1	
202	IDF	F-2	B-1	F	W-2	PES	W-2	PES	W-2	PES	W-2	PES	C-4	-			
203	ELECTRICAL CLOSET	F-2	B-1	F	W-6	-	W-6	-	W-6	-	W-6	-	C-4	-			
204	NETWORK TECHNOLOGY	F-8	B-1	F	W-1 / W-2	PES	W-1	PES	W-1	PES	W-1	PES	C-1	F	10'-0"	WS-1	
205	STORAGE	F-2	B-1	F	W-1	PES	W-1	PES	W-1	PES	W-1	PES	C-1	F	10'-0"	WS-4	
206	WOMEN'S RESTROOM	F-3	B-2	F	W-4	PSG	W-4	PSG	W-4	PSG	W-4	PSG	C-3	PSG	10'-0"		
207	MEN'S RESTROOM	F-3	B-2	F	W-4	PSG	W-4	PSG	W-4	PSG	W-4	PSG	C-3	PSG	10'-0"		
208	STORAGE	F-5	-	-	W-5	-	W-5	-	W-5	-	W-5	-	C-4	-	-		
209	JANITOR	F-2	B-1	F	W-6	-	W-5	-	W-5	-	W-6	-	C-4	-	-		
210	CORRIDOR #1	F-7	B-1	F	W-2	PES	W-2	PES	W-2	PES	W-2	PES	C-2	PES	10'-0"		
211	CORRIDOR #2	F-7	B-1	F	W-2	PES	W-2	PES	W-2	PES	W-2	PES	C-2	PES	10'-0"		
212	CLASSROOM	F-1	B-1	F	W-1 / W-2	PES	W-1	PES	W-1	PES	W-1	PES	C-1	F	10'-0"	WS-1	
213	STORAGE	F-2	B-1	F	W-1	PES	W-1	PES	W-1	PES	W-1	PES	C-2	PES	8'-0"		
214	STORAGE	F-2	B-1	F	W-1	PES	W-1	PES	W-1	PES	W-1	PES	C-2	PES	8'-0"		
215	STORAGE	F-2	B-1	F	W-1	PES	W-1	PES	W-1	PES	W-1	PES	C-2	PES	8'-0"		
216	CLASSROOM	F-1	B-1	F	W-1	PES	W-2	PES	W-1 / W-2	PES	W-2	PES	C-1	F	10'-0"	WS-1	
217	CLASSROOM	F-1	B-1	F	W-1	PES	W-1	PES	W-2	PES	W-2	PES	C-1	F	10'-0"	WS-1	
218	CLASSROOM	F-1	B-1	F	W-1	PES	W-1	PES	W-1	PES	W-2	PES	C-1	F	10'-0"	WS-1	
219	CLASSROOM	F-1	B-1	F	W-1 / W-2	PES	W-2	PES	W-1	PES	W-2	PES	C-1	F	10'-0"	WS-1	
220	CLASSROOM	F-1	B-1	F	W-1	PES	W-2	PES	W-1 / W-2	PES	W-2	PES	C-1	F	10'-0"	WS-1	
221	CLASSROOM	F-1	B-1	F	W-1	PES	W-1	PES	W-1	PES	W-2	PES	C-1	F	10'-0"	WS-1	
222	CLASSROOM	F-1	B-1	F	W-1	PES	W-2	PES	W-1	PES	W-2	PES	C-1	F	10'-0"	WS-1	
223	BRIDGE	F-5	B-1	F	W-2	PES	W-1	PES	W-2	PES	W-1	PES	C-2	PES	12'-0"		
224	NOT USED																
225	MATH LAB	F-1	B-1	F	W-2	PES	W-2	PES	W-2	PES	W-1	PES	C-1	F	10'-0"	WS-1	
226	MATH LAB	F-1	B-1	F	W-1 / W-2	PES	W-1	PES	W-2	PES	W-2	PES	C-1	F	10'-0"	WS-1	
227	CLASSROOM	F-1	B-1	F	W-1 / W-2	PES	W-2	PES	W-1 / W-2	PES	W-2	PES	C-1	F	10'-0"	WS-1	
228	CORRIDOR	F-4	B-1	F	W-7		-	-	W-7		W-7		C-7		10'-0"		
229	MULTIMEDIA	F-8	B-1	F	W-1	PES	W-2	PES	W-2	PES	W-1 / W-2	PES	C-1	F	10'-0"	WS-1	
230	DISTANCE LEARNING	F-1	B-1	F	W-1 / W-2	PES	W-1	PES	W-1 / W-2	PES	W-2	PES	C-1	F	10'-0"	WS-1	
231	STORAGE	F-2	B-1	F	W-2	PES	W-1 / W-2	PES	W-1 / W-2	PES	W-2	PES	C-2	PES	10'-0"		
232	CLASSROOM	F-1	B-1	F	W-2	PES	W-2	PES	W-1	PES	W-1 / W-2	PES	C-1	F	10'-0"	WS-1	
233	IDF	F-2	B-1	F	W-2	PES	W-1	PES	W-2	PES	W-2	PES	C-4	-	-		
234	ELECTRICAL	F-2	B-1	F	W-2	PES	W-2	PES	W-2	PES	W-1	PES	C-4	-	-		
235	BIOLOGY LAB	F-7	B-4	F	W-1	PSG	W-1	PSG	W-1	PSG	W-1	PSG	C-1	F	10'-0"	WS-1	
236	BALANCE ROOM	F-7	B-4	F	W-1	PSG	W-1	PSG	W-1	PSG	W-1	PSG	C-1	F	10'-0"		
237	CHEMISTRY LAB	F-7	B-4	F	W-1	PSG	W-1	PSG	W-1	PSG	W-1	PSG	C-1	F	10'-0"	WS-1	
238	PHYSICS LAB	F-7	B-4	F	W-1	PSG	W-1	PSG	W-1	PSG	W-1	PSG	C-1	F	10'-0"	WS-1	
239	PREPARATION/ STORAGE	F-7	B-4	F	W-1	PSG	W-1	PSG	W-1	PSG	W-1	PSG	C-1	F	10'-0"		
240	BIOLOGY LAB	F-7	B-4	F	W-1	PSG	W-1	PSG	W-1	PSG	W-1	PSG	C-1	F	10'-0"	WS-1	
241	WOMEN'S RESTROOM	F-3	B-2	F	W-4	PSG	W-4	PSG	W-4	PSG	W-2 / W-4	PSG	C-3	PSG	10'-0"		
242	MEN'S RESTROOM	F-3	B-2	F	W-4	PSG	W-4	PSG	W-2 / W-4	PSG	W-2 / W-4	PSG	C-3	PSG	10'-0"		
243	JANITOR	F-2	B-1	-	W-5	PSG	W-5	PSG	W-5	PSG	W-5	PSG	C-4	-	-		
244	ELECTRICAL CLOSET	F-5	B-1	F	W-6	-	W-6	-	W-6	-	W-6	-	C-4	-			
245	NOT USED																

FINISH MATERIAL LEGEND

MARK:	MATERIALS:
FLOOR	
F-1	CARPET TILE
F-2	VINYL COMPOSITION TILE
F-3	CERAMIC TILE
F-4	VINYL COMPOSITION TILE W/ RESILIENT UNDERLAYMENT
F-5	SEALED CONCRETE SLAB
F-6	ATHLETIC FLOOR, SEE DETAIL
F-7	SHEET VINYL
F-8	CARPET TILE W/ ANTI-STATIC/ ANTI-MICROBIAL

MARK:	MATERIALS:
BASE	
B-1	4" HIGH RESILIENT BASE
B-2	5" HIGH CERAMIC TILE, ADHESIVE SET O/ CEMENT BACKER BOARD
B-3	WOOD BASE
B-4	INTEGRAL COVE BASE

MARK:	MATERIALS:
WALL	
W-1	5/8" GYPSUM BOARD OVER MTL STUDS
W-2	5/8" TYPE 'X' GYPSUM BOARD OVER MTL STUDS
W-3	5/8" WATER RESISTANCE GYPSUM BOARD OVER MTL STUDS
W-4	48" HIGH CERAMIC TILE WAINSCOT ADHESIVE SET OVER CEMENT BACKER BOARD OR 1/4R GYP. BD., OVER MTL STUDS
W-5	GYP BD- TAPE ONLY
W-6	5/8" TYPE 'X' GYPSUM BOARD- TAPE ONLY
W-7	CEMENT PLASTER ⚠1
W-8	PLASTIC PANELING

MARK:	MATERIALS:
CEILING	
C-1	24" X 48" SUSPENDED ACOUSTIC PANEL CEILING
C-2	SUSPENDED GYPSUM BOARD
C-3	WATER RESISTANT GYPSUM BOARD
C-4	OPEN TO STRUCTURE ABOVE
C-5	48" X 48" SUSPENDED CEILING GRID FRAME ONLY
C-6	24" X 48" SUSPENDED CEILING GRID FRAME ONLY
C-7	CEMENT PLASTER
C-8	CEMENT PLASTER ⚠1

MARK:	MATERIALS:
WINDOW SHADES	
WS-1	MANUAL WINDOW SHADE, SEE DETAIL 13/5.01
WS-2	MANUAL WINDOW SHADE (BLACK-OUT BLIND), SEE DETAIL 13/5.01
WS-3	MOTORIZED WINDOW SHADE, SEE DETAIL
WS-4	HORIZONTAL "MINI" BLIND, SEE DETAIL

GENERAL NOTES

ABBREVIATIONS

AC	ACOUSTICAL CEILING	PCB	PAINT CEILING BLACK
AFF	ABOVE FINISH FLOOR	PG	PAINT GLOSS
BD	BOARD	PNL	PANEL
CMT	CERAMIC MOSAIC TILE	PSG	PAINT SEMI GLOSS
CMU	CONCRETE MASONRY UNIT	QT	QUARRY TILE
CONC	CONCRETE	RESIL	RESILIENT
CT	CERAMIC TILE	SF	SATIN FINISH
EPXY	EPOXY	SLR	SEALER
EXPSD	EXPOSED	SV	SHEET VINYL
F	FACTORY FINISH	TO	TAPE ONLY
FRP	FIBER REINFORCED PLASTIC PANEL	VCT	VINYL COMPOSITION TILE
GL	GLASS	VFAC	VINYL FABRIC WALL COVERING
GYP	GYPSUM		
MTL	METAL		
EP	EPOXY PAINT		
PES	PAINT EGG SHELL		
PF	PAINT FLAT		

tBP
architecture
planning
interiors
management

tBP/Architecture
1000 Burnett Ave, Suite 140
Concord, CA 94520
ph: 9252466419 fx: 9252466495

architect

consultant

DSA IDENTIFICATION STAMP
DIVISION OF THE STATE ARCHITECT
OFFICE OF REGULATION SERVICES
APPL NO. 105719
FILE SS
DATE

agency

SAN RAMON VALLEY CENTER
CONTRA COSTA COMMUNITY COLLEGE DISTRICT
SAN RAMON, CALIFORNIA

owner

tBP project number : 20212.00
file name: D11-0902.dwg
drawn by: checked by:
date: 03-04-04 plot scale: 1:1

Rev.	date:	description:
⚠1	05-26-04	DESIGN CLARIFICATIONS

drawing title: building no:
FINISH SCHEDULE

drawing no:
9.02
drawing of

BE ABSOLUTELY DETERMINED TO BLACK PRINT 100 PERCENT

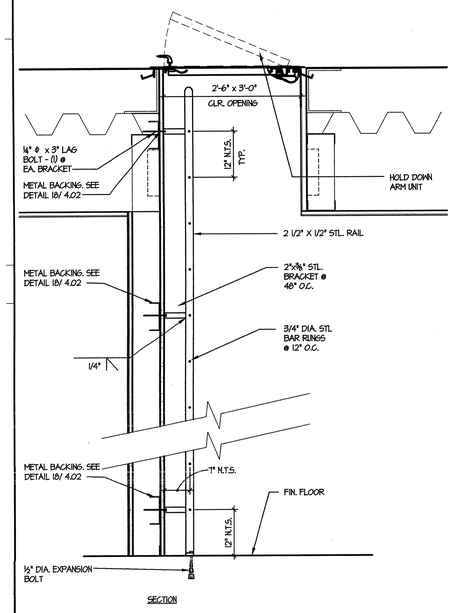

SECTION

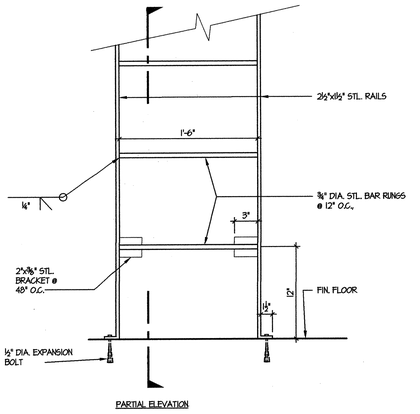

PARTIAL ELEVATION

ATTIC ACCESS LADDER

SCALE: 1-1/2" = 1'-0" 11

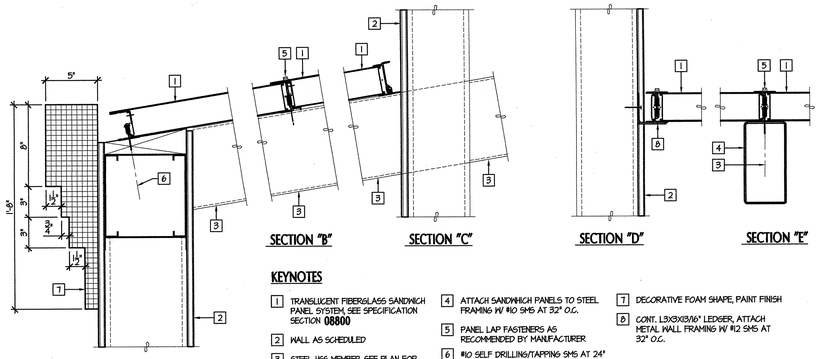

KEYNOTES

1. TRANSLUCENT FIBERGLASS SANDWICH PANEL SYSTEM, SEE SPECIFICATION SECTION **08800**
2. WALL AS SCHEDULED
3. STEEL HSS MEMBER, SEE PLAN FOR SPACING, SEE STRUCT. FOR SIZE AND SUPPORT. PAINT FINISH
4. ATTACH SANDWHICH PANELS TO STEEL FRAMING W/ #10 SMS AT 32" O.C.
5. PANEL LAP FASTENERS AS RECOMMENDED BY MANUFACTURER
6. #10 SELF DRILLING/TAPPING SMS AT 24" O.C. THRU WOOD NAILER INTO METAL FRAMING
7. DECORATIVE FOAM SHAPE, PAINT FINISH
8. CONT. L3X3X3/16" LEDGER, ATTACH METAL WALL FRAMING W/ #12 SMS AT 32" O.C.

TRANSLUCENT FIBERGLASS SANDWHICH PANEL SYSTEM

SCALE: NONE 2

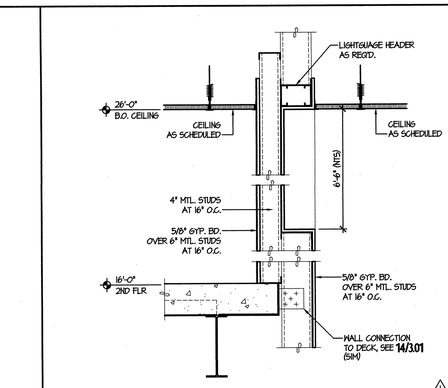

INTERIOR WALL RELIEF DETAIL

SCALE: 1" = 1'-0" 3

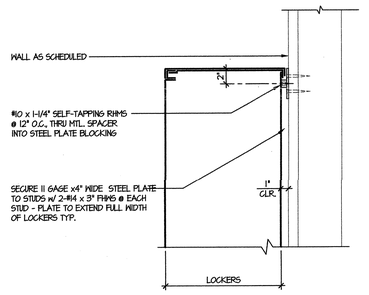

LOCKER HEAD

SCALE: 1-1/2" =N'T'ø" 7

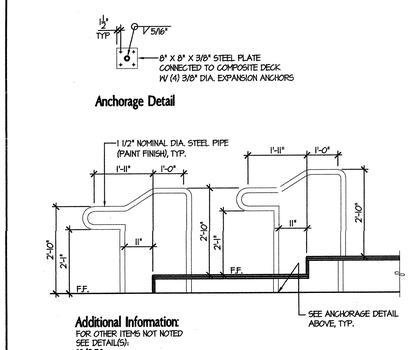

Additional Information:
FOR OTHER ITEMS NOT NOTED SEE DETAIL(S):
10/9.50

TIERED PLATFORM HANDRAIL

FILENAME: SCALE: 1/2" = 1'-0" 8

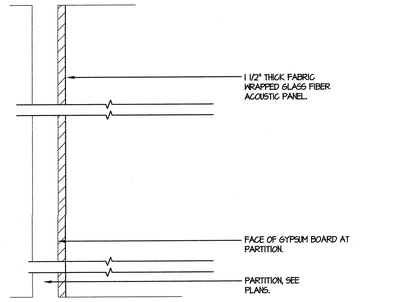

ACOUSTIC PANEL DETAIL

SCALE: 1" = 1'-0" 9

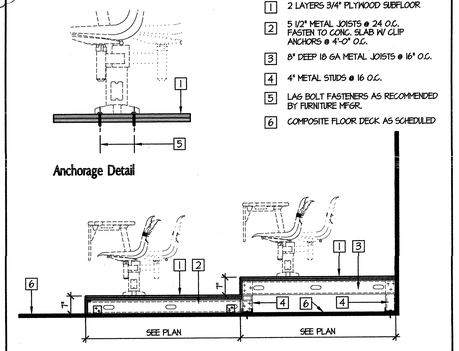

TIERED SEATING PLATFORM

FILENAME: SCALE: 1/2" = 1'-0" 10

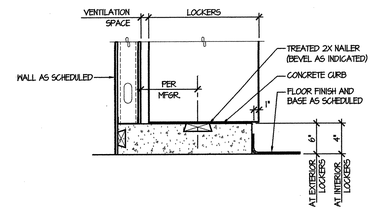

LOCKER BASE

SCALE: 1" = 1'-0" 12

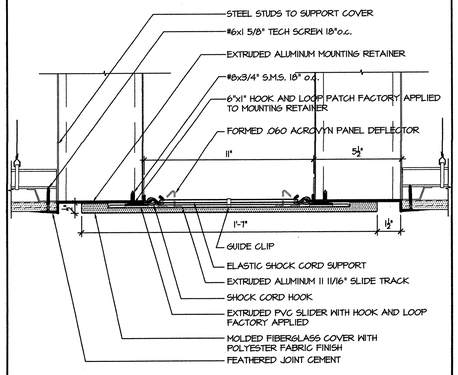

INTERIOR CEILING EXPANSION JOINT

SCALE: 3" = 1'-0" 13

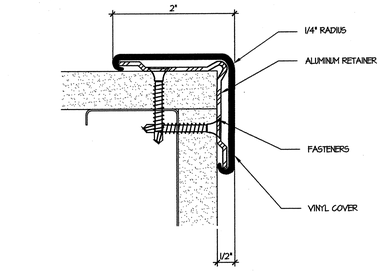

CORNER GUARD

SCALE: N.T.S. 14

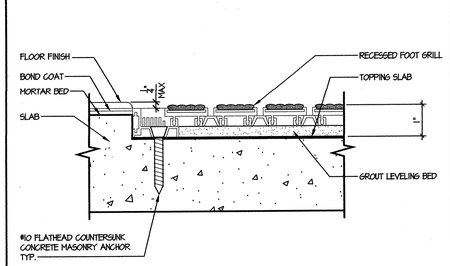

RECESSED FLOOR MAT

SCALE: HALF 15

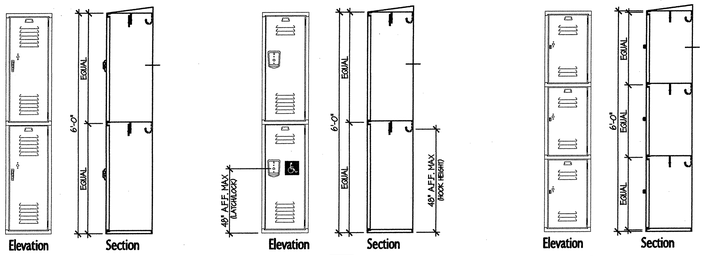

GENERAL NOTES

1. FOR LOCKER BASE SEE DETAIL **12/9.50**
2. FOR LOCKER HEAD, SEE DETAIL **7/9.50**
3. PROVIDE SLOPED TOPS ON ALL LOCKERS

LOCKER SCHEDULE

SCALE: 3/4" = 1'-0" 17

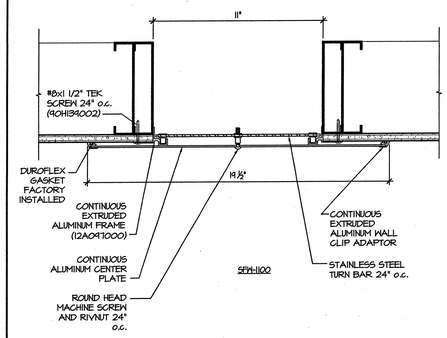

INTERIOR WALL EXPANSION JOINT

SCALE: 3" = 1'-0" 18

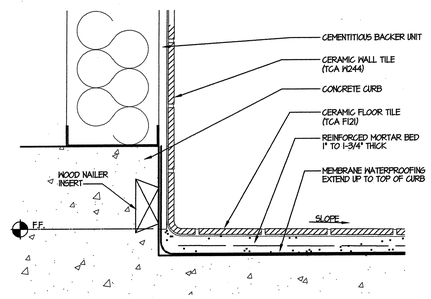

TILE @ TOILETS

SCALE: 3" = 1'-0" 19

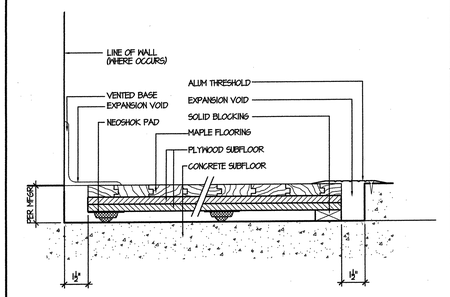

SPORT FLOORING

SCALE: N.T.S. 20

tBP
architecture
planning
interiors
management

tBP/Architecture
1000 Burnett Ave, Suite 140
Concord, CA 94520
ph. 925.246.6419 fx. 925.246.6495

LICENSED ARCHITECT — CHRISTOPHER M. SIMMS — LIC. C-4188 — REGISTERED — STATE OF CALIFORNIA

architect

consultant

APPROVED
DEPARTMENTAL STAMP
DIV. OF REGULATION SERVICES
OFFICE OF REGULATION SERVICES
APP. NO. 120719
BY: [signature]
DATE: 6-9-05

agency

SAN RAMON VALLEY CENTER

CONTRA COSTA COMMUNITY COLLEGE DISTRICT

SAN RAMON, CALIFORNIA

owner

tBP project number : 20212.00

file name: DTL_950.dwg

drawn by: DM checked by:

date: 08-04-04 plot scale: 1:1

Rev.	date:	description:
1	05-26-04	DESIGN CLARIFICATIONS

drawing title: INTERIOR DETAILS

building no:

drawing no: 9.50

drawing of

THE ARCHITECT DETERMINED ED BUILDING MAX USE DO 2/25/04

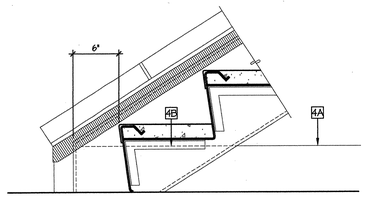

Additional Information:
FOR OTHER ITEMS NOT NOTED SEE DETAIL: **6/10.01**

BOTTOM LANDING
SCALE: 1-1/2" = 1'-0" **1**

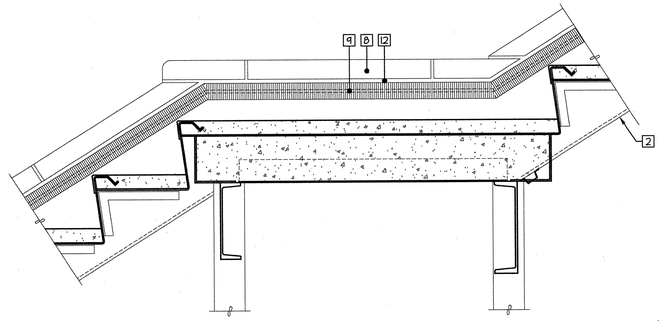

Additional Information:
FOR OTHER ITEMS NOT NOTED SEE DETAIL: **6/10.01**

INTERMEDIATE LANDING
SCALE: 1-1/2" = 1'-0" **3**

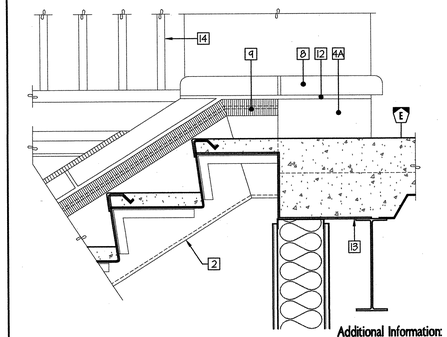

Additional Information:
FOR OTHER ITEMS NOT NOTED SEE DETAIL: **6/10.01**

TOP LANDING
SCALE: 1-1/2" = 1'-0" **4**

KEYNOTES

1. CAST IN PLACE CONCRETE TREADS (MEDIUM BROOM FINISH W/CONC. SEALER) O/ STEEL PAN CONTINUOUSLY WELDED TO STRINGER.
2. STEEL STRINGER, SEE STRUCTURAL.
3. STEEL SUPPORT MEMBER, SEE STRUCTURAL.
4A. CONCRETE CURB
4B. LINE OF CONCRETE CURB BEYOND (SHOWN "DASHED")
5. 1-1/4" x 1-1/4" x 3/16" STEEL SUPPORT ANGLE WELDED TO STRINGER.
6. (NOT USED)
7. (2) 3/4" DIA. x 4" LONG ANCHORS
8. PREGAST CONCRETE CAP SYSTEM, PROVIDE DRIP KERF @ UNDERSIDE AS INDICATED.
9. GSM FLASHING
10. METAL GUARDRAIL/HANDRAIL SYSTEM AT STAIRS, SEE DETAILS **18 & 19B/10.01**
11. 2" WIDE (MIN.) WARNING STRIPE/ABRASIVE NOSING OF 70% MIN. CONTRASTING COLOR (TYPICAL AT EACH NOSING AT ALL STAIRS.)
12. MORTAR SETTING BED O/EXPANDED METAL LATH
13. METAL DECK END CLOSURE
14. GUARDRAIL AT BREEZEWAYS, SEE DETAIL **17 & 19A/10.01**
15. 5/8" TYPE "X" GYP. BD. O/ 7/8" HAT CHANNAL FURRING AT 2'-0" O.C.
16. CEMENT PLASTER WALL FINISH AS SCHEDULED
17. LONG-FLANGED CASING BEAD
18. 1/2" CEMENTITIOUS BACKER BOARD
19. (NOT USED)
20. #10 STAINLESS STEEL SMS AT 8" O.C.
21. CONTINUOUS LAYER OF 5/8" TYPE "X" GYP. BD.
22. CONTINUOUS METAL LEDGER
23. EIFS SHAPE O/CEMENT PLASTER
24. CASING BEAD AND SEALANT
25. 4" X 2" X 1/4" STEEL TOP RAIL
26. 2" X 1-1/2" X 3/16" STEEL RUNNER RAIL
27. 1-1/2" DIA. STEEL HANDRAIL
28. 2" X 2 X 1/4" STEEL SUPPORT POST
29. 1" X 1" X 3/16" VERTICAL STEEL BALLUSTRADES AT 5'-0" O.C. (SPACED SUCH THAT A SPHERE >4" DIA. CANNOT PASS THRU)
30. HANDRAIL SUPPORT BRACKET MPONTED TO VERTICAL SUPPORT POST AS INDICATED

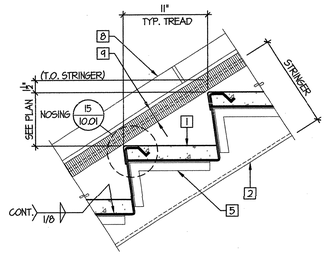

Note:
HANDRAIL / GUARDRAIL NOT SHOWN FOR CLARITY. FOR HANDRAIL GUARDRAIL CONNECTION TO STRINGER, SEE DETAIL **7/10.01**

Note:
FOR STAIR PAN CONNECTION TO INTERMEDIATE HSS STRINGER, SEE **STRUCT. DWG'S.**

TYPICAL TREAD AND RISER
FILENAME: VERT-001
SCALE: 1 1/2" = 1'-0" **6**

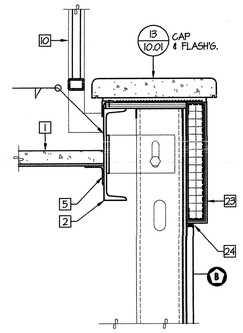

EDGE OF LANDING
SCALE: 1-1/2" = 1'-0" **7**

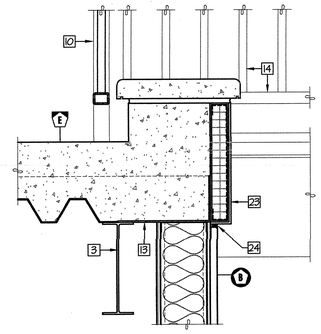

EDGE OF LANDING
SCALE: 1-1/2" = 1'-0" **8**

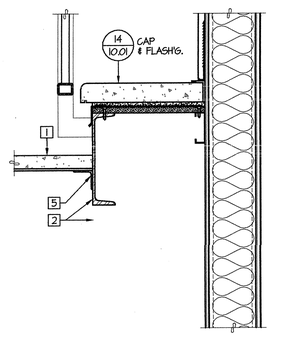

TREAD/CAP @ WALL
SCALE: 1-1/2" = 1'-0" **9**

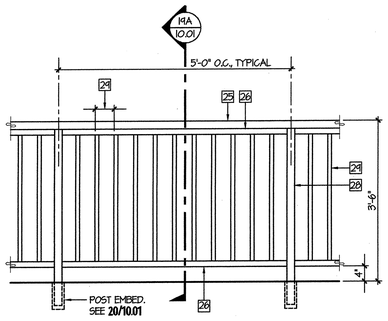

GUARDRAIL AT BREEZEWAY
FILENAME: GUARDRAIL-01
SCALE: 3/4" = 1'-0" **17**

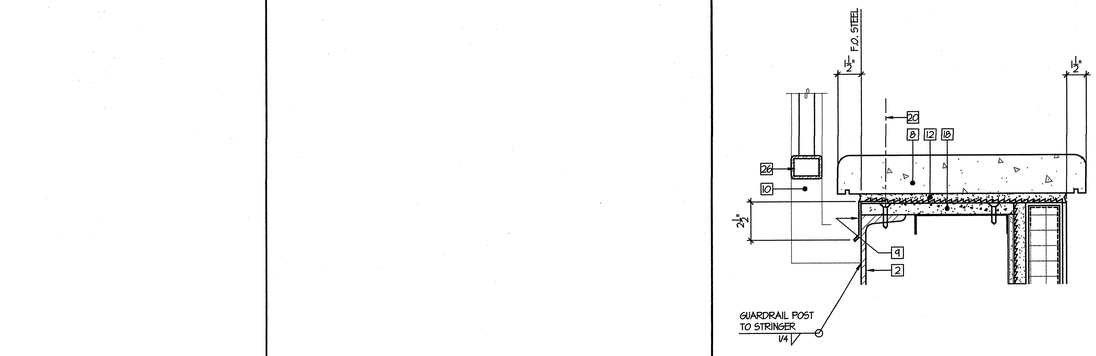

CAP FLASHING
SCALE: 3" = 1'-0" **13**

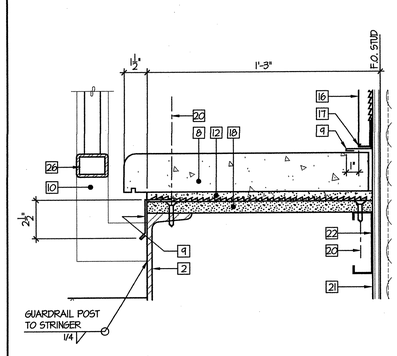

STRINGER CAP @ WALL
SCALE: 3" = 1'-0" **14**

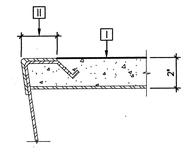

NOSING DETAIL
SCALE: 3" = 1'-0" **15**

GUARDRAIL/HANDRAIL AT STAIRWAY
FILENAME: GUARDRAIL-01
SCALE: 3/4" = 1'-0" **18**

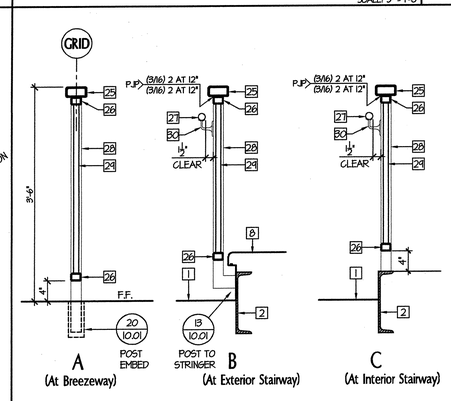

GUARDRAIL SECTIONS
FILENAME:
SCALE: 1" = 1'-0" **19**

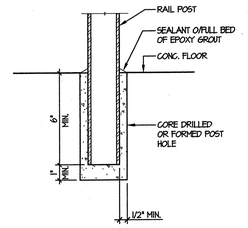

POST EMBEDMENT
SCALE: 3" = 1'-0" **20**

IF ABSOLUTELY DETERMINED TO ENJOY HAVE YOU DO 2024.dwg

tBP
architecture
planning
interiors
management

LICENSED ARCHITECT RENEWAL 08/31/2025 No. C-5880 STATE OF CALIFORNIA

tBP/Architecture
1000 Burnett Ave, Suite 140
Concord, CA 94520
ph: 925.246.6419 fx: 925.246.6495

architect

consultant

APPROVED
DIVISION OF THE STATE ARCHITECT
OFFICE OF REGULATION SERVICES
APPL NO. 110719
BY: [illegible]
DATE: 6-4-04

agency

SAN RAMON VALLEY CENTER

CONTRA COSTA COMMUNITY COLLEGE DISTRICT

SAN RAMON, CALIFORNIA

owner

tBP project number: 20212.00
file name: D11-1001.dwg
drawn by: **checked by:**
date: 03-09-04 **plot scale:** 1:1

Rev.	date:	description:
1	05-26-04	DESIGN CLARIFICATIONS

drawing title: EXTERIOR STAIR DETAILS
building no.:
drawing no.: 10.01
drawing of

NOTES:
FOR METAL PAN TO STRINGER WELDING, SEE D/10.03

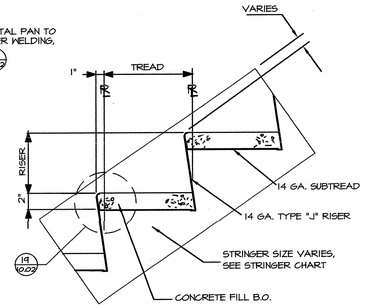

POURED-IN-PLACE TREAD 7
SCALE: 3/4" = 1'-0"

UNIT WIDTH	WELD
UP TO 4'-6"	1 - 12
4'-6" TO 6'-0"	1 - 8
ABOVE 6'-0"	1 - 6

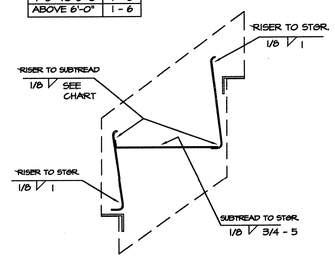

TYPICAL WELDS / POURED-IN-PLACE TREAD 8
SCALE: 3/4" = 1'-0"

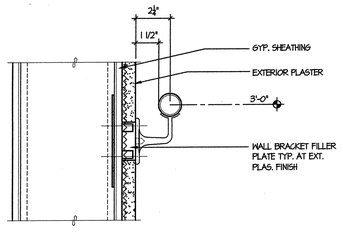

WALL MOUNTED HANDRAIL (EXT.) 18
SCALE: 3" = 1'-0"

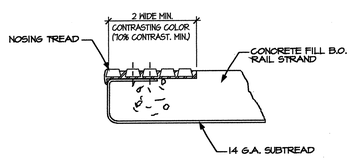

NOTE:
PROVIDE AT ALL INTERIOR STAIR TREADS

NOSING POURED-IN-PLACE TREAD DETAIL 19
SCALE: 1" = 1'-0"

THE ARCHITECT DESIGNED TO BUILD WITH YOU (510) 893-6429

tBP
architecture
planning
interiors
management

tBP/Architecture
1000 Burnett Ave, Suite 140
Concord, CA 94520
ph: 9252466419 fx: 9252466495

architect

consultant

agency

DEPARTMENT OF THE STATE ARCHITECT
OFFICE OF REGULATION SERVICES
APPL NO. 10G719
DATE 03-13-09

SAN RAMON VALLEY CENTER
CONTRA COSTA COMMUNITY COLLEGE DISTRICT
SAN RAMON, CALIFORNIA

owner

tBP project number : 20212.00
file name: DII-1002.dwg
drawn by: checked by:
date: 03-09-04 plot scale: 1:1

Rev:	date:	description:

drawing title: INTERIOR STAIR DETAILS
building no:
drawing no: 10.02
drawing of

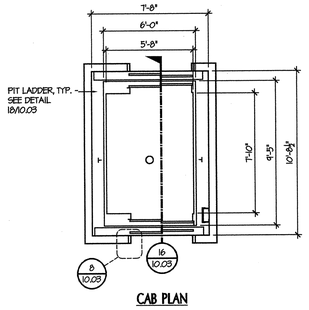

CAB PLAN

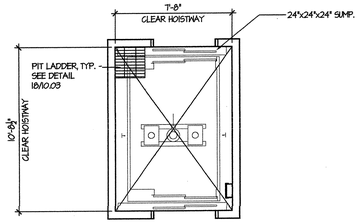

PIT PLAN

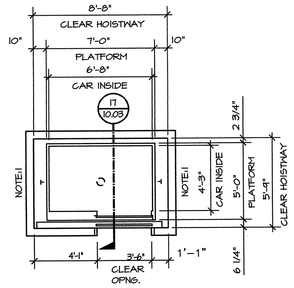

CAB PLAN
(ELEV. #2 DOOR OPP. HAND)

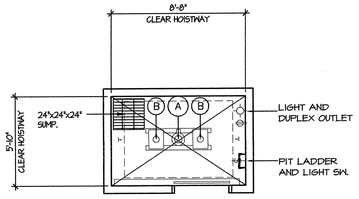

PIT PLAN

PIT VERTICAL LOADS (IMPACT):

A — 18.0K CYLINDER LOAD

B — 9.0K BUFFER LOAD

CYLINDER AND BUFFER LOADS DO NOT OCCUR AT THE SAME TIME.

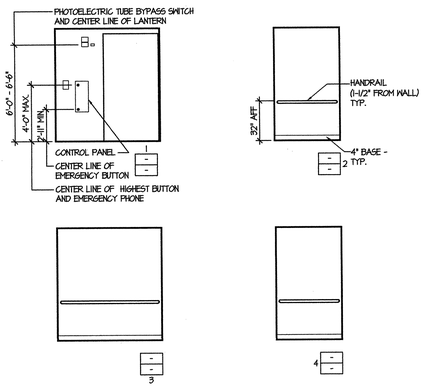

ELEVATOR CAB ELEVATIONS

SCALE: 1/4" = 1'-0" — 3

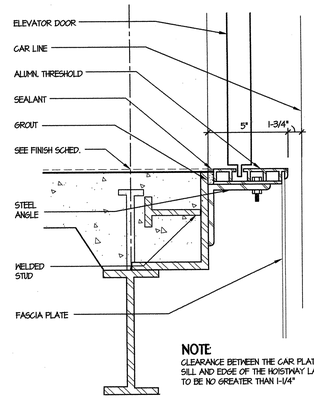

NOTE:
CLEARANCE BETWEEN THE CAR PLATFORM SILL AND EDGE OF THE HOISTWAY LANDING TO BE NO GREATER THAN 1-1/4"

ELEVATOR THRES. @ 2ND FLOOR

SCALE: 3" = 1'-0" — 4

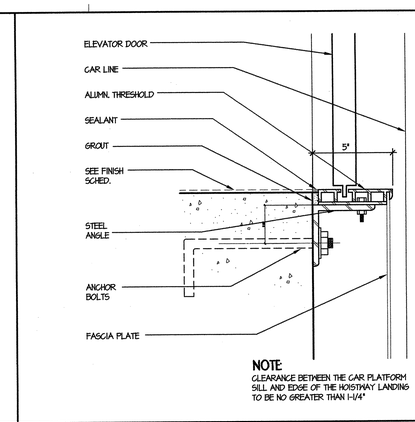

NOTE:
CLEARANCE BETWEEN THE CAR PLATFORM SILL AND EDGE OF THE HOISTWAY LANDING TO BE NO GREATER THAN 1-1/4"

ELEVATOR THRES.@ 1ST FLOOR

SCALE: 3" = 1'-0" — 5

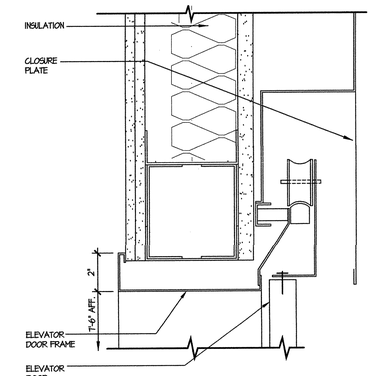

ELEVATOR DOOR HEAD

SCALE: 3" = 1'-0" — 8

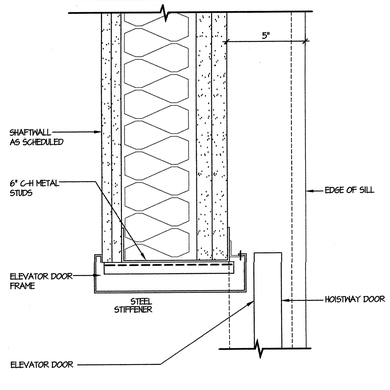

ELEVATOR DOOR JAMB

SCALE: 3" = 1'-0" — 9

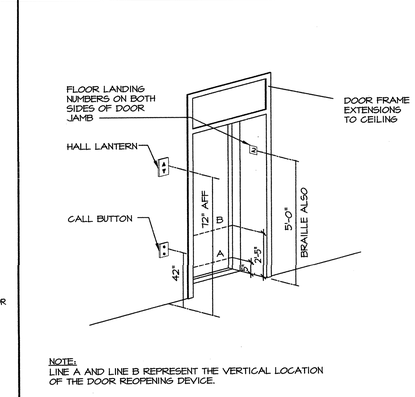

NOTE:
LINE A AND LINE B REPRESENT THE VERTICAL LOCATION OF THE DOOR REOPENING DEVICE.

ELEVATOR CONTROLS & SIGNAGE

N.T.S. — 10

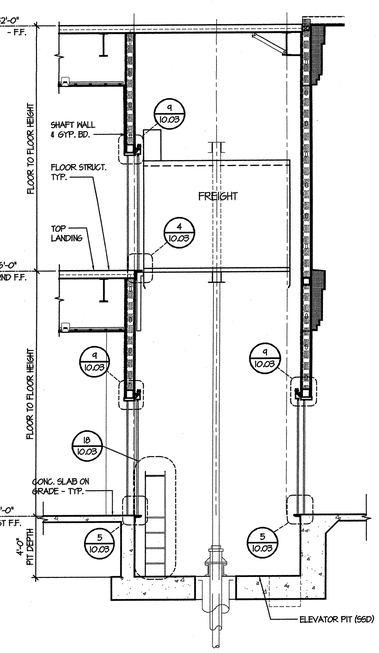

ELEVATOR #3 PLANS

SCALE: 1/4" = 1'-0" — 6

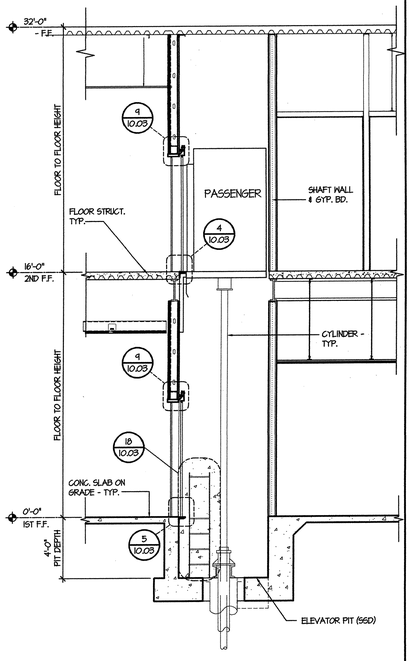

ELEVATOR #1 & #2 PLANS

SCALE: 1/4" = 1'-0" — 7

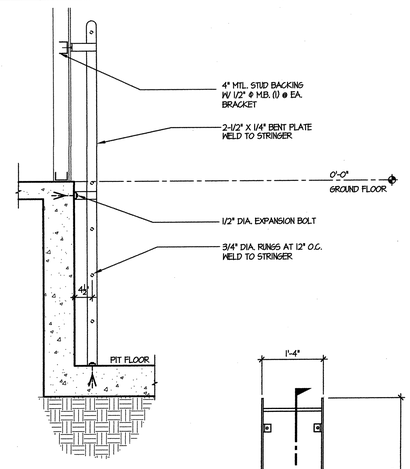

SECTION "A"

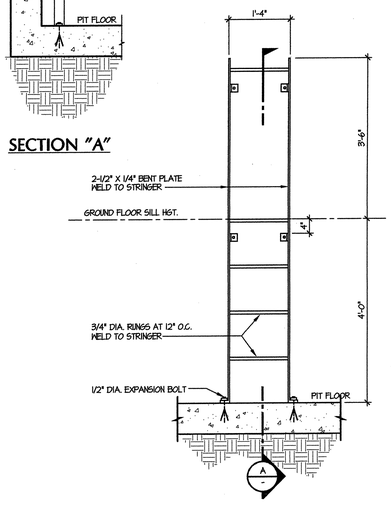

ELEVATOR PIT LADDER DETAIL

SCALE: 3/4" = 1'-0" — 18

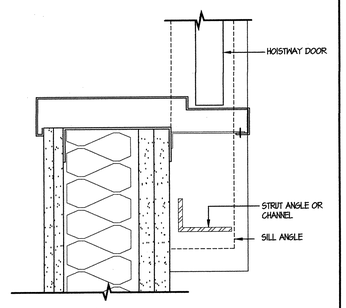

ELEVATOR SIDE JAMB

SCALE: 3" = 1'-0" — 14

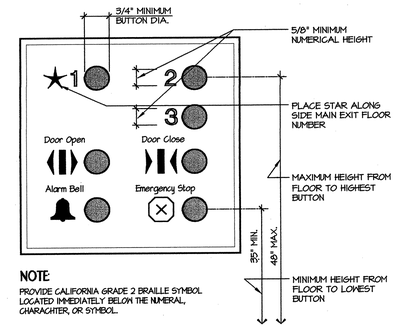

NOTE
PROVIDE CALIFORNIA GRADE 2 BRAILLE SYMBOL LOCATED IMMEDIATELY BELOW THE NUMERAL, CHARACTER, OR SYMBOL.

ELEVATOR CONTROL PANEL

N.T.S. — 15

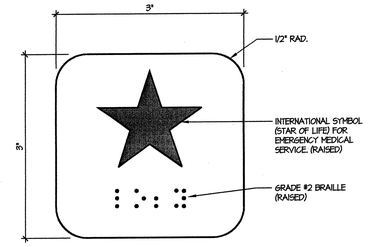

NOTE:
SYMBOL SHALL BE PERMENTLY ATTACHED TO EACH SIDE OF HOISTWAY DOOR FRAME ON THE PORTION OF THE FRAME AT RIGHT ANGLES TO THE LANDING AREA. EACH SYMBOL SHALL BE NOT LESS THAN 78" AND NOT MORE THAN 84" ABOVE THE FINISH FLOOR.

"STAR OF LIFE" EMERGENCY MEDICAL SERVICES

SCALE: FULL — 20

IBC ABOUTELEY DESIGNED TO ENJOY WHAT YOU DO (925)406

tBP
architecture
planning
interiors
management

LICENSED ARCHITECT — ROBERT M. BUTLER — RENEWAL 08/31/2005 — RE. NO. C-14886 — STATE OF CALIFORNIA

tBP/Architecture
1000 Burnett Ave, Suite 140
Concord, CA 94520
ph. 925.246.6419 fx. 925.246.6495

architect

consultant

REGISTRATION STAMP — DIV. OF THE STATE ARCHITECT, OFFICE OF REGULATION SERVICES — APPL NO. 10579 — FILE NO. 07-33 — DATE

agency

SAN RAMON VALLEY CENTER
CONTRA COSTA COMMUNITY COLLEGE DISTRICT
SAN RAMON, CALIFORNIA

owner

tBP project number : 20212.00
file name: DLT-1003.dwg
drawn by: DM — checked by:
date: 08-04-04 — plot scale: 1:1

Rev.	date:	description:

drawing title: ELEVATOR DETAILS & LADDER DETAILS
building no: -
drawing no: 10.03
drawing of

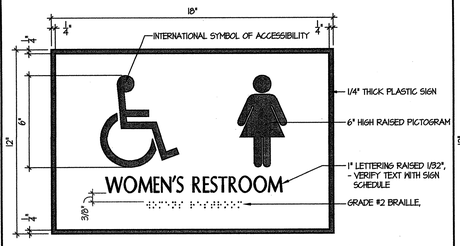

NOTES:

MOUNT SIGN ON THE WALL ADJACENT TO LATCH SIDE OF DOOR, AT 60" ABOVE FINISH FLOOR TO CENTER OF SIGN. WHERE THERE IS NO WALL SPACE ON LATCH SIDE OF DOOR, PLACE SIGNS ON NEAREST ADJACENT WALL, PREFERABLY ON THE RIGHT.
- SEE SIGNAGE LOCATION LEGEND, DETAIL 4/ 11.01.

- SEE DOOR SCHEDULE FOR QUANTITY OF THIS SIGN REQUIRED.

WALL-MOUNTED TOILET RM. SIGNAGE

SCALE: 3" = 1'-0" | 1

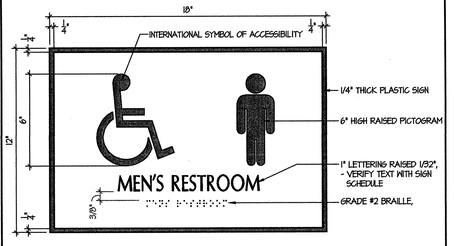

NOTES:

MOUNT SIGN ON THE WALL ADJACENT TO LATCH SIDE OF DOOR, AT 60" ABOVE FINISH FLOOR TO CENTER OF SIGN. WHERE THERE IS NO WALL SPACE ON LATCH SIDE OF DOOR, PLACE SIGNS ON NEAREST ADJACENT WALL, PREFERABLY ON THE RIGHT.
- SEE SIGNAGE LOCATION LEGEND, DETAIL 4/ 11.01.

- SEE DOOR SCHEDULE FOR QUANTITY OF THIS SIGN REQUIRED.

WALL-MOUNTED TOILET RM. SIGNAGE

SCALE: 3" = 1'-0" | 2

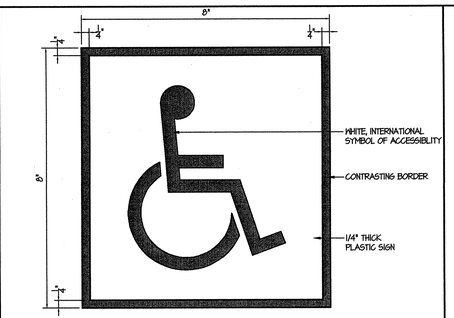

NOTES:

MOUNT SIGN ON THE WALL ADJACENT TO LATCH SIDE OF DOOR, AT 60" ABOVE FINISH FLOOR TO CENTER OF SIGN. WHERE THERE IS NO WALL SPACE ON LATCH SIDE OF DOOR, PLACE SIGNS ON NEAREST ADJACENT WALL, PREFERABLY ON THE RIGHT.
- SEE SIGNAGE LOCATION LEGEND, DETAIL 4/ 11.01.

- SEE FLOOR PLAN AND EXTERIOR ELEVATIONS FOR QUANTITY OF THIS SIGN REQUIRED.

- CHARACTERS AND BACKGROUND OF THE SIGN SHALL BE EGGSHELL, MATTE, OR OTHER NON-GLARE FINISH AND CHARACTERS SHALL CONTRAST WITH THEIR BACKGROUND.

ACCESSIBLE ENTRANCE SIGNAGE

SCALE: HALF | 3

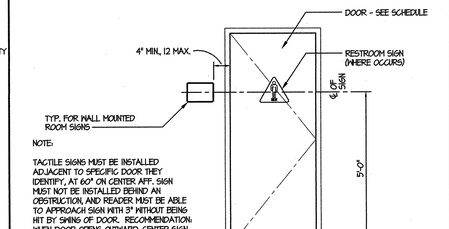

NOTE:

TACTILE SIGNS MUST BE INSTALLED ADJACENT TO SPECIFIC DOOR THEY IDENTIFY, AT 60" ON CENTER AFF. SIGN MUST NOT BE INSTALLED BEHIND AN OBSTRUCTION AND READER MUST BE ABLE TO APPROACH SIGN WITH 3" WITHOUT BEING HIT BY SWING OF DOOR. RECOMMENDATION: WHEN DOOR OPENS OUTWARD, CENTER SIGN HORIZONTALLY WITHIN 18 INCH SPACE ADJACENT TO LATCH SIDE OF DOOR.

NOTE: REFER TO GENERAL NOTES FOR MORE INFORMATION

SIGNAGE LOCATION LEGEND

SCALE: 1/2" = 1'-0" | 4

GENERAL SIGNAGE NOTES:

1.) WHERE PERMANENT IDENTIFICATION IS PROVIDED FOR ROOMS AND SPACES, SIGNS SHALL BE INSTALLED ON THE WALL ADJACENT TO THE LATCH SIDE OF THE DOOR. WHERE THERE IS NO WALL SPACE TO THE LATCH SIDE OF THE DOOR, INCLUDING AT DOUBLE LEAF DOORS, SIGNS SHALL BE PLACED ON THE NEAREST ADJACENT WALL. MOUNTING HEIGHT SHALL BE 60" ABOVE FINISH FLOOR TO THE CENTERLINE OF THE SIGN. MOUNTING LOCATION FOR SUCH SIGNAGE SHALL BE SUCH THAT A PERSON MAY APPROACH WITHIN 3" OF SIGNAGE WITHOUT ENCOUNTERING PROTRUDING OBJECTS OR STANDING WITHIN THE SWING OF THE DOOR.

2.) ALL INTERIOR PLASTIC SIGNS SHALL BE 1/8" THICK MINIMUM U.N.O.

3.) ALL EXTERIOR PLASTIC SIGNS SHALL BE 1/4" THICK MINIMUM.

4.) CHARACTERS, PICTOGRAMS AND BACKGROUND OF THE SIGN SHALL BE EGGSHELL, MATTE, OR OTHER NON-GLARE FINISH AND CHARACTERS AND PICTOGRAMS SHALL CONTRAST WITH THEIR BACKGROUND.

5.) CONTRACTED CALIFORNIA GRADE 2 BRAILLE SHALL BE USED WHENEVER BRAILLE SYMBOLS ARE SPECIFICALLY REQUIRED IN OTHER PORTIONS OF THESE STANDARDS. DOTS SHALL BE 1/10 INCH (2.54 mm) ON CENTERS IN EACH CELL WITH 2/10 INCH (5.08 mm) SPACE BETWEEN CELLS. DOTS SHALL BE RAISED A MINIMUM OF 1/40 (0.635 mm) ABOVE THE BACKGROUND.

6.) ALL PLASTIC SIGN LETTERING TO BE RAISED 1/32" AND SHALL BE 5/8" MIN. TO 2" MAX. IN HEIGHT USE LARGEST LETTER HEIGHT PRACTICAL. LETTER CHARACTERS TO BE UPPER CASE SANS-SERIF OR SIMPLE-SERIF.

7.) VERIFY EXACT SIGN TEXT WITH DOOR SCHEDULE AS APPLICABLE.

8.) VERIFY ALL ROOM NUMBERS WITH OWNER.

9.) VERIFY TEXT ON ENGRAVED INSERTS WITH OWNER.

10.) VERIFY ORIENTATION OF DIRECTIONAL ARROWS.

11.) VERIFY MAXIMUM OCCUPANCY QUANTITY WITH FLOOR PLAN.

12.) ALL EXTERIOR WALL MOUNTED SIGNS AND ALL INTERIOR WALL MOUNTED SIGNS ATTACHED TO MASONRY, PLASTER, OR CERAMIC TILE SHALL BE MECHANICALLY FASTENED WITH VANDAL-PROOF FASTENERS THROUGH THE WALL FINISH AND INTO SOLID WOOD OR METAL BACKING.

13.) ALL INTERIOR WALL MOUNTED SIGNS SECURED TO DRYWALL SHALL BE ADHESIVELY APPLIED.

14.) ALL PLASTIC SIGNS ADHESIVELY APPLIED TO GLASS SHALL HAVE AN ADDITIONAL PLASTIC BACKING THE SAME SIZE AS THE SIGN ADHESIVELY APPLIED TO THE OTHER SIDE OF THE GLASS.

15.) ROOM SIGNS TO BE NUMBERED FROM 100 TO 199 FOR THE 1ST FLOOR, 200 TO 299 FOR THE 2ND FLOOR.

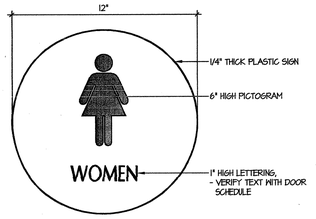

NOTES:

MOUNT SIGNS CENTERED ON DOOR AT 60" ABOVE FINISH FLOOR.
- SEE SIGNAGE LOCATION LEGEND, DETAIL 4/ 11.01.

- SEE DOOR SCHEDULE FOR QUANTITY OF THIS SIGN REQUIRED.

DOOR-MOUNTED TOILET RM. SIGNAGE

SCALE: 3" = 1'-0" | 6

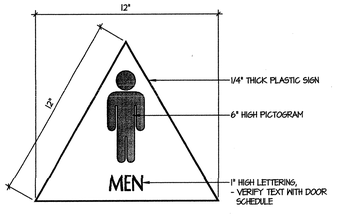

NOTES:

MOUNT SIGNS CENTERED ON DOOR AT 60" ABOVE FINISH FLOOR TO CENTER OF SIGN.
- SEE SIGNAGE LOCATION LEGEND, DETAIL 4/ 11.01.

- SEE DOOR SCHEDULE FOR QUANTITY OF THIS SIGN REQUIRED.

DOOR-MOUNTED TOILET RM. SIGNAGE

SCALE: 3" = 1'-0" | 7

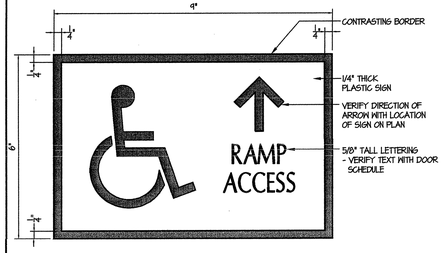

NOTES:

MOUNT SIGN ON THE WALL ADJACENT TO LATCH SIDE OF DOOR, AT 60" ABOVE FINISH FLOOR TO CENTER OF SIGN. WHERE THERE IS NO WALL SPACE ON LATCH SIDE OF DOOR, PLACE SIGNS ON NEAREST ADJACENT WALL, PREFERABLY ON THE RIGHT.
- SEE SIGNAGE LOCATION LEGEND, DETAIL 4/ 11.01.

- SEE FLOOR PLAN AND INTERIOR ELEVATIONS FOR QUANTITY OF THIS SIGN REQUIRED.

- CHARACTERS AND BACKGROUND OF THE SIGN SHALL BE EGGSHELL, MATTE, OR OTHER NON-GLARE FINISH AND CHARACTERS SHALL CONTRAST WITH THEIR BACKGROUND.

RAMP ACCESS SIGNAGE

SCALE: HALF | 8

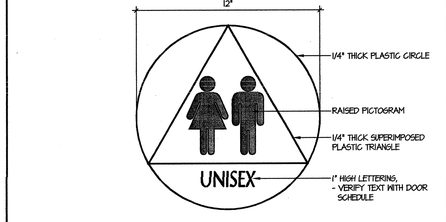

NOTES:

MOUNT SIGNS CENTERED ON DOOR AT 60" ABOVE FINISH FLOOR TO CENTER OF SIGN.
- SEE SIGNAGE LOCATION LEGEND, DETAIL 4/ 11.01.

- SEE DOOR SCHEDULE FOR QUANTITY OF THIS SIGN REQUIRED.

DOOR-MOUNTED TOILET RM. SIGNAGE

SCALE: 3" = 1'-0" | 9



NOTES:

MOUNT SIGN ON THE WALL ADJACENT TO LATCH SIDE OF DOOR, AT 60" ABOVE FINISH FLOOR TO CENTER OF SIGN. WHERE THERE IS NO WALL SPACE ON LATCH SIDE OF DOOR, PLACE SIGNS ON NEAREST ADJACENT WALL, PREFERABLY ON THE RIGHT.
- SEE SIGNAGE LOCATION LEGEND, DETAIL 4/ 11.01.

- SEE DOOR SCHEDULE FOR QUANTITY OF THIS SIGN REQUIRED.

WALL-MOUNTED TOILET RM. SIGNAGE

SCALE: 3" = 1'-0" | 10

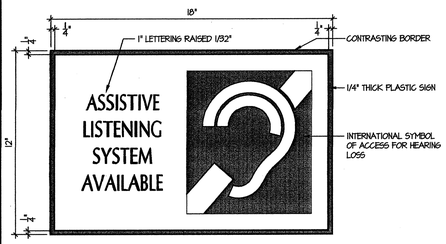

NOTES:

MOUNT SIGN PROMINENTLY ON THE WALL AT 60" ABOVE FINISH FLOOR TO CENTER OF SIGN.
- SEE SIGNAGE LOCATION LEGEND, DETAIL 4/ 11.01.

- SEE FLOOR PLAN AND INTERIOR ELEVATIONS FOR QUANTITY OF THIS SIGN REQUIRED.

ASSISTIVE-LISTENING DEVICE SIGNAGE

SCALE: 3" = 1'-0" | 11

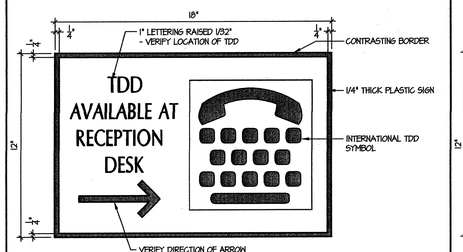

NOTES:

MOUNT SIGN ON THE WALL ADJACENT TO TELEPHONES, AT 60" ABOVE FINISH FLOOR TO CENTER OF SIGN. WHERE THERE IS NO WALL SPACE ON NEXT TO TELEPHONE, PLACE SIGNS ON NEAREST ADJACENT WALL, PREFERABLY ON THE RIGHT.
- SEE SIGNAGE LOCATION LEGEND, DETAIL 4/ 11.01.

- SEE FLOOR PLAN AND INTERIOR ELEVATIONS FOR QUANTITY OF THIS SIGN REQUIRED.

TDD DIRECTIONAL SIGNAGE

SCALE: 3" = 1'-0" | 12

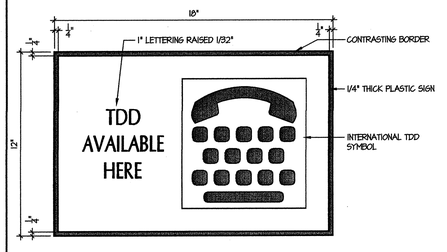

NOTES:

MOUNT SIGN ON THE WALL ADJACENT TO TDD TELEPHONE, AT 60" ABOVE FINISH FLOOR TO CENTER OF SIGN. WHERE THERE IS NO WALL SPACE ON NEXT TO TELEPHONE, PLACE SIGNS ON NEAREST ADJACENT WALL, PREFERABLY ON THE RIGHT.
- SEE SIGNAGE LOCATION LEGEND, DETAIL 4/ 11.01.

- SEE FLOOR PLAN AND INTERIOR ELEVATIONS FOR QUANTITY OF THIS SIGN REQUIRED.

TEXT TELEPHONE (TDD) SIGNAGE

SCALE: 3" = 1'-0" | 13

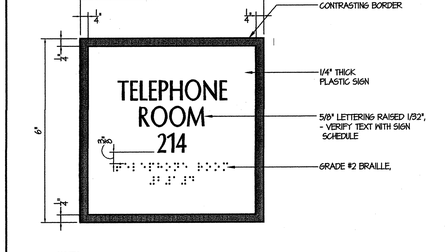

NOTES:

MOUNT SIGN ON THE WALL ADJACENT TO LATCH SIDE OF DOOR, AT 60" ABOVE FINISH FLOOR TO CENTER OF SIGN. WHERE THERE IS NO WALL SPACE ON LATCH SIDE OF DOOR, PLACE SIGNS ON NEAREST ADJACENT WALL, PREFERABLY ON THE RIGHT.
- SEE SIGNAGE LOCATION LEGEND, DETAIL 4/ 11.01.

- SEE DOOR SCHEDULE FOR QUANTITY OF THIS SIGN REQUIRED.

- THE CHARACTERS AND BACKGROUND OF THE SIGN SHALL BE EGGSHELL, MATTE, OR OTHER NON-GLARE FINISH AND CHARACTERS SHALL CONTRAST WITH THEIR BACKGROUND.

ROOM NAME/ NUMBER SIGNAGE

SCALE: HALF | 14

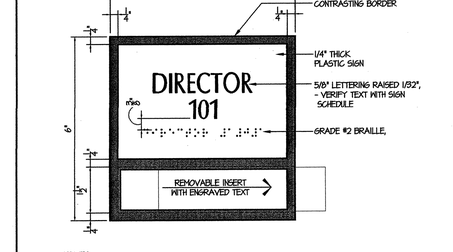

NOTES:

MOUNT SIGN ON THE WALL ADJACENT TO LATCH SIDE OF DOOR, AT 60" ABOVE FINISH FLOOR TO CENTER OF SIGN. WHERE THERE IS NO WALL SPACE ON LATCH SIDE OF DOOR, PLACE SIGNS ON NEAREST ADJACENT WALL, PREFERABLY ON THE RIGHT.
- SEE SIGNAGE LOCATION LEGEND, DETAIL 4/ 11.01.

- SEE DOOR SCHEDULE FOR QUANTITY OF THIS SIGN REQUIRED.

- CHARACTERS AND BACKGROUND OF THE SIGN SHALL BE EGGSHELL, MATTE, OR OTHER NON-GLARE FINISH AND CHARACTERS SHALL CONTRAST WITH THEIR BACKGROUND.

ROOM NAME/ NUMBER SIGN. WITH INSERT

SCALE: HALF | 15

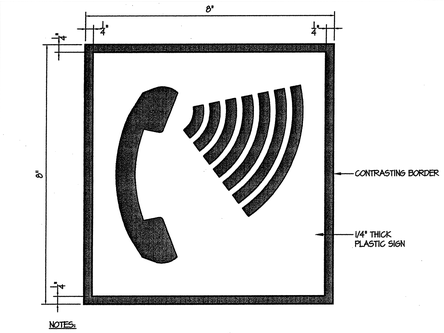

NOTES:

MOUNT SIGN ON THE WALL ABOVE TELEPHONE EQUIPPED WITH VOLUME CONTROLS

- SEE FLOOR PLAN AND INTERIOR ELEVATIONS FOR QUANTITY OF THIS SIGN REQUIRED.

- CHARACTERS AND BACKGROUND OF THE SIGN SHALL BE EGGSHELL, MATTE, OR OTHER NON-GLARE FINISH AND CHARACTERS SHALL CONTRAST WITH THEIR BACKGROUND.

VOLUME CONTROL TELEPHONE SIGNAGE

SCALE: HALF | 16

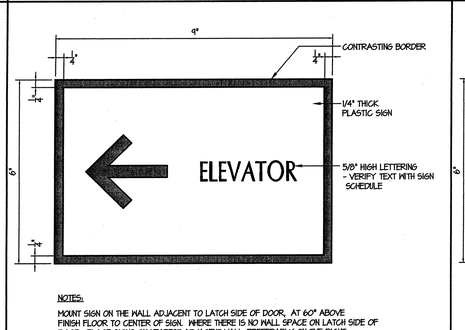

NOTES:

MOUNT SIGN ON THE WALL ADJACENT TO LATCH SIDE OF DOOR, AT 60" ABOVE FINISH FLOOR TO CENTER OF SIGN. WHERE THERE IS NO WALL SPACE ON LATCH SIDE OF DOOR, PLACE SIGNS ON NEAREST ADJACENT WALL, PREFERABLY ON THE RIGHT.
- SEE SIGNAGE LOCATION LEGEND, DETAIL 4/ 11.01.

- SEE FLOOR PLAN AND INTERIOR ELEVATIONS FOR QUANTITY OF THIS SIGN REQUIRED.

- CHARACTERS AND BACKGROUND OF THE SIGN SHALL BE EGGSHELL, MATTE, OR OTHER NON-GLARE FINISH AND CHARACTERS SHALL CONTRAST WITH THEIR BACKGROUND.

DIRECTIONAL SIGNAGE

SCALE: HALF | 17

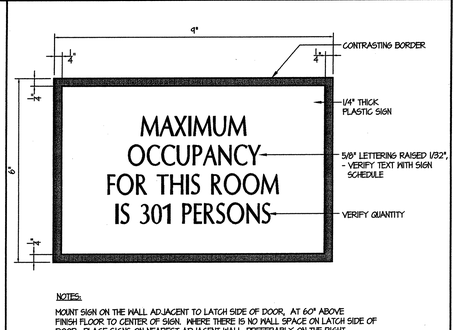

NOTES:

MOUNT SIGN ON THE WALL ADJACENT TO LATCH SIDE OF DOOR, AT 60" ABOVE FINISH FLOOR TO CENTER OF SIGN. WHERE THERE IS NO WALL SPACE ON LATCH SIDE OF DOOR, PLACE SIGNS ON NEAREST ADJACENT WALL, PREFERABLY ON THE RIGHT.
- SEE SIGNAGE LOCATION LEGEND, DETAIL 4/ 11.01.

- SEE FLOOR PLAN AND INTERIOR ELEVATIONS FOR QUANTITY OF THIS SIGN REQUIRED.

- CHARACTERS AND BACKGROUND OF THE SIGN SHALL BE EGGSHELL, MATTE, OR OTHER NON-GLARE FINISH AND CHARACTERS SHALL CONTRAST WITH THEIR BACKGROUND.

OCCUPANCY SIGNAGE

SCALE: HALF | 18

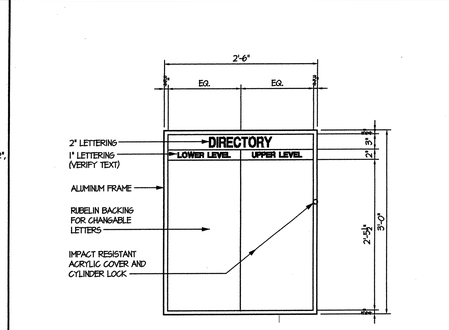

DIRECTORY SIGN

SCALE: 1" = 1'-0" | 19

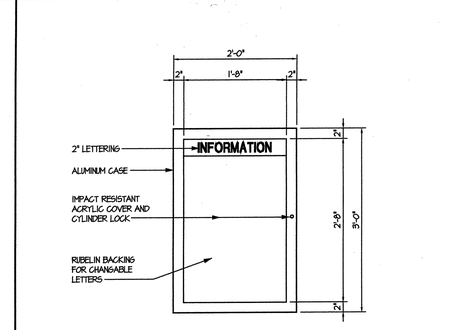

EXTERIOR INFORMATION SIGN

SCALE: 1" = 1'-0" | 20

DO NOT SCALE DRAWINGS

tBP
architecture
planning
interiors
management

tBP/Architecture
1000 Burnett Ave, Suite 140
Concord, CA 94520
ph 925.246.6419 fx 925.246.6495

architect

consultant

agency

IDENTIFICATION STAMP
DIVISION OF THE STATE ARCHITECT
OFFICE OF REGULATION SERVICES
APPL. NO. 107519
DATE 12-15-03

owner

SAN RAMON VALLEY CENTER
CONTRA COSTA COMMUNITY COLLEGE DISTRICT
SAN RAMON, CALIFORNIA

tBP project number : 20212.00
file name: D11-1101.dwg
drawn by: checked by:
date: 03-09-04 plot scale: 1:1

Rev:	date:	description:

drawing title: building no:
TYPICAL SIGNAGE

drawing no:
11.01
drawing of

GENERAL STRUCTURAL NOTES

I. GENERAL

A. DRAWINGS AND SPECIFICATIONS REPRESENT FINISHED STRUCTURE. CONTRACTOR SHALL BE RESPONSIBLE FOR MEANS AND METHODS OF CONSTRUCTION INCLUDING BUT NOT LIMITED TO SHORING AND TEMPORARY BRACING. THE CONTRACTOR SHALL TAKE ALL NECESSARY MEASURES TO INSURE SAFETY OF ALL PERSONS AND STRUCTURES AT THE SITE AND ADJACENT TO THE SITE. OBSERVATION VISITS TO THE SITE BY THE ARCHITECT, ENGINEER OR CONSTRUCTION MANAGER SHALL NOT RELIEVE THE CONTRACTOR OF SUCH RESPONSIBILITY.

B. HOLES AND OPENINGS THROUGH WALLS AND FLOORS FOR DUCTS, PIPING AND VENTILATIONS SHALL BE COORDINATED BY THE CONTRACTOR WHO SHALL VERIFY SIZES AND LOCATION OF SUCH HOLES OR OPENINGS WITH THE MECHANICAL, PLUMBING, AND ELECTRICAL DRAWINGS AND THESE SUB-CONTRACTORS.

C. NO PIPES OR DUCTS SHALL BE EMBEDDED IN SLABS OR WALLS UNLESS SPECIFICALLY DETAILED OR APPROVED BY THE ARCHITECT.

D. SEE DRAWINGS OTHER THAN STRUCTURAL FOR: KINDS OF FLOOR FINISH AND THEIR LOCATION, FOR DEPRESSIONS IN FLOOR SLABS, FOR OPENINGS IN WALLS AND FLOORS REQUIRED BY ARCHITECTURAL AND MECHANICAL FEATURES, FOR ROADWAY PAVING, WALKS, RAMPS, STAIRS, CURBS, ETC.

E. CONTRACTOR SHALL VERIFY ALL DIMENSIONS AT JOB SITE BEFORE COMMENCING WORK AND SHALL REPORT ANY DISCREPANCIES TO THE ARCHITECT.

F. OMISSIONS OR CONFLICTS BETWEEN VARIOUS ELEMENTS OF THE DRAWINGS, NOTES, AND DETAILS SHALL BE BROUGHT TO THE ATTENTION OF THE ARCHITECT AND RESOLVED BEFORE PROCEEDING WITH THE WORK.

G. DO NOT USE SCALED DIMENSIONS; USE WRITTEN DIMENSIONS. WHERE NO DIMENSION IS PROVIDED, CONSULT THE ARCHITECT FOR CLARIFICATION BEFORE PROCEEDING WITH THE WORK.

H. WHERE MEMBER LOCATIONS ARE NOT SPECIFICALLY DIMENSIONED, MEMBERS ARE EITHER LOCATED ON COLUMN LINES OR EQUALLY SPACED BETWEEN MEMBERS ON COLUMN LINES OR BETWEEN MEMBERS OTHERWISE LOCATED.

I. TYPICAL DETAILS ARE INTENDED TO APPLY TO APPLICABLE SITUATIONS UON. IN GENERAL, TYPICAL DETAILS ARE NOT SPECIFICALLY REFERENCED.

J. IF CERTAIN FEATURES ARE NOT FULLY SHOWN OR CALLED FOR ON THE DRAWINGS OR SPECIFICATIONS, THEIR CONSTRUCTION SHALL BE OF THE SAME CHARACTER AS FOR SIMILAR CONDITIONS THAT ARE CALLED FOR OR SHOWN.

K. THE INTENT OF THE DRAWINGS AND SPECIFICATIONS IS TO CONSTRUCT THE COMMUNITY COLLEGE BUILDING IN ACCORDANCE WITH THE 2001 EDITION OF TITLE 24, CALIFORNIA CODE OF REGULATIONS. SHOULD ANY CONDITIONS DEVELOP NOT COVERED BY THE CONTRACT DOCUMENTS WHEREIN THE FINISHED WORK WILL NOT COMPLY WITH TITLE 24, CALIFORNIA CODE OF REGULATIONS, A CHANGE ORDER DETAILING AND SPECIFYING THE REQUIRED WORK SHALL BE SUBMITTED TO AND APPROVED BY DSA BEFORE PROCEEDING WITH THE WORK.

II. DESIGN BASIS

A. APPLICABLE CODE: CALIFORNIA BUILDING CODE (CBC), 2001 EDITION, WITH DSA/SSS AMENDMENTS.

B. VERTICAL LIVE LOADS:

1. OFFICES & CLASSROOMS:
   50 PSF PLUS 30 PSF INCIDENTAL LIVE LOAD.
   (20 PSF DEAD LOAD FOR PARTITIONS).
2. EXITS AND CORRIDORS:
   100 PSF. (NON-REDUCIBLE).
3. STORAGE: LIGHT STORAGE 125 PSF
4. ROOF: 20 PSF PLUS MECHANICAL.

C. LATERAL LOADS:

1. DESIGN WIND SPEED = 70; EXPOSURE = C;
   IMPORTANCE = 1.0
2. SEISMIC:
   ZONE = 4, SOIL TYPE = Sd, R =6.4 (SCBF) & 8.5 (SMRF),
   Na =1.00, Nv = 1.20, I = 1.15x1.25 (FOR IRREGULARITIES)
   DESIGN BASE SHEAR, V = 0.247 W (LABORATORY AND LIBRARY)
   DESIGN BASE SHEAR, V = 0.186 W (ADMINISTATION BUILDING)
   DESIGN BASE SHEAR, V = 0.172 W (CENTRAL PLANT)
   SITE SPECIFIC RESPONSE SPECTRA AS DEFINED IN GEOTECHNICAL REPORT

D. FOUNDATION DESIGN CRITERIA

1. SIZES OF FOOTINGS AND ELEVATIONS AT BOTTOMS OF FOOTINGS HAVE BEEN ESTABLISHED BASED ON THE SOILS REPORT "GEOTECHNICAL EXPLORATION AND GEOLOGIC HAZARD ASSESSMENT, SAN RAMON VALLEY CENTER" PREPARED BY ENGEO INCORPORATED AND DATED JANUARY 24, 2003. AS EXCAVATION PROGRESSES, CONDITIONS MAY DEVELOP REQUIRING CHANGES IN THESE ELEVATIONS AND/OR FOOTINGS. SUCH CHANGES SHALL BE MADE ONLY AS DIRECTED BY THE SOILS ENGINEER.
2. SPREAD FOOTINGS: ALLOWABLE SOIL BEARING PRESSURES ARE:

DEAD LOADS	4,500 PSF
DEAD + LIVE LOADS	4,500 PSF
DEAD + LIVE + SEISMIC LOADS	6,000 PSF

III. MATERIALS

A. CONCRETE

1. REINFORCING STEEL:
   a. BARS: ASTM A615, GRADE 60.
   b. WELDED BARS: ASTM A706, GRADE 60.
   c. WELDED WIRE FABRIC: ASTM 185.
   d. ALL CONCRETE SHALL BE REINFORCED UNLESS SPECIFICALLY MARKED 'NOT REINFORCED'.
2. CONCRETE CLASSES: SEE SPECIFICATIONS FOR REQUIREMENTS.

CLASS	USE	WT	STRENGTH
A	FOUNDATIONS	145 PCF	3000 PSI
B.	SLAB-ON-GRADE	145 PCF	3500 PSI
C.	LIGHTWEIGHT FILL ON STEEL DECK	110 PCF	3000 PSI
D.	NORMAL WEIGHT FILL ON METAL DECK	145 PCF	3000 PSI

3. MINIMUM CONCRETE COVER FOR REINFORCING STEEL:
   a. SURFACES PLACED AGAINST EARTH 3"
   b. FORMED SURFACES BELOW GRADE 2"
   c. SURFACES EXPOSED TO WEATHER 2"
   d. BEAM AND COLUMN BARS (INCLUDING STIRRUPS OR TIES) 1-1/2"
   e. SLABS NOT EXPOSED TO WEATHER 1"
   f. CONCRETE AT METAL DECK ¾"

B. CONCRETE MASONRY

1. UNITS: LIGHTWEIGHT BLOCKS CONFORMING TO ASTM C90, GRADE N, TYPE I, F'm = 1500 PSI.
2. REINFORCING STEEL: ASTM A615, GRADE 60. ALL MASONRY TO BE REINFORCED UNLESS SPECIFICALLY MARKED 'NOT REINFORCED'.
3. MORTAR: ASTM C270, TYPE M.
4. GROUT: COMPRESSIVE STRENGTH OF 2500 PSI AT 28 DAYS. ALL CELLS SHALL BE FULLY GROUTED.

D. STEEL

1.

SHAPE	MATERIAL
WIDE FLANGES:	ASTM A992, GRADE 50
PLATES:	ASTM A572, GRADE 50
ANGLES & CHANNELS:	ASTM A36
TUBES:	ASTM A500, GRADE B
PIPES:	ASTM A53, GRADE B

2. BOLTS: ASTM A325-SC UON.
3. STEEL DECK: ASTM A653, GRADE A.
4. WELDING ELECTRODES: E-70. WELDS NOTED "CVN" SHALL USE ELECTRODES WITH CHARPY V-NOTCH VALUES OF 20FT-LBS AT -20 DEGREES F OR BETTER.
5. ANCHOR RODS: ASTM F1554: Fy = 36, OR 55 ksi AS NOTED ON DRAWINGS.
6. WELDED STUDS: HEADED STUDS AS PER AWS D1.1
7. STRUCTURAL STEEL MEMBERS AND THEIR CONNECTIONS DENOTED "A.E.S.S." SHALL COMPLY WITH SECTION 10, ARCHITECTURALLY EXPOSED STRUCTURAL STEEL OF THE AISC CODE OF STANDARD PRACTICE, FOR FABRICATION, ERECTION TOLERANCES AND SURFACE FINISHES.
8. SEE SPECIAL PROVISIONS IN SPECIFICATIONS RELATED TO MOMENT AND BRACED FRAMES.

IV. QUALITY CONTROL

A. THE FOLLOWING WORK REQUIRES TESTS AND/OR INSPECTIONS. FOR SPECIFIC REQUIREMENTS SEE SPECIFICATIONS. INSPECTIONS SHALL BE MADE IN ACCORDANCE WITH CBC 1701A BY A CERTIFIED SPECIAL INSPECTOR RETAINED BY THE OWNER.

1. FOOTING & PIER EXCAVATION
2. SOIL COMPACTION
3. REINFORCING STEEL,
4. CONCRETE
5. STRUCTURAL MASONRY
6. EXPANSION BOLTS
7. GROUTED DOWELS
8. WELDING: REBAR, STRUCTURAL STEEL, METAL DECK, WELDED STUDS
9. HIGH STRENGTH BOLTS

B. A PARTIAL LISTING OF REQUIRED STRUCTURAL SUBMITTALS FOLLOWS. CONSULT THE SPECIFICATIONS FOR A COMPLETE LISTING OF SUBMITTAL REQUIREMENTS.

1. CONCRETE MIX DESIGNS
2. GROUT MIX DESIGNS
3. CONSTRUCTION JOINT LAYOUT & CONTROL JOINT LAYOUT
4. REINFORCING STEEL SHOP DRAWINGS
5. STRUCTURAL STEEL AND STEEL DECK SHOP DRAWINGS
6. MANUFACTURER'S DATA FOR INSERTS, GROUTS & EPOXIES
7. WELDING ELECTRODE DATA AND WELDING PROCEDURE SPECIFICATIONS

C. CONSTRUCTION OBSERVATIONS WILL BE PROVIDED PER CBC 1702A BY THE ENGINEER OF RECORD.

V. DEFERRED SUBMITTALS

DEFERRED SUBMITTALS SHALL FIRST BE SUBMITTED TO THE PROJECT ARCHITECT AND/OR THE ENGINEER OF RECORD FOR REVIEW AND COORDINATION. FOLLOWING THE COMPLETION OF THE ARCHITECT'S OR ENGINEER'S REVIEW, A SUBMITTAL TO THE PLAN CHECK AUTHORITY SHALL BE MADE FOR REVIEW AND APPROVAL. THIS SUBMITTAL SHALL INCLUDE A STATEMENT THAT THE PROJECT ARCHITECT/ENGINEER REVIEW HAS BEEN COMPLETED AND THAT PLANS AND CALCULATIONS FOR THE DEFERRED HAVE BEEN FOUND TO BE IN GENERAL CONFORMANCE WITH THE DESIGN OF THE BUILDING.

VI. SPECIFIED CONSTRUCTION SEQUENCE FOR MOMENT FRAMES:

A. SPECIFIED CONSTRUCTION SEQUENCE

1. GRADE BEAMS DEFINED BY DETAIL 1/S5.3 AT MOMENT FRAME COLUMNS SHALL BE CAST PRIOR TO POURING CONCRETE ON METAL DECK SUPPORTED BY MOMENT FRAME.
2. CONCRETE STRENGTH FOR GRADE BEAMS SHALL BE MINIMUM 30% SPECIFIED PRIOR TO POURING EITHER 2ND FLOOR OR ATTIC LEVEL.
3. CONCRETE STRENGTH FOR GRADE BEAM SHALL BE MINIMUM 75% SPECIFIED PRIOR TO POURING BOTH 2ND FLOOR AND ATTIC LEVEL.
4. UNTIL CONCRETE STRENGTH OF GRADE BEAMS IS AT SPECIFIED STRENGTH LIMIT TOTAL FLOOR AND ROOF LIVE LOAD TO 40 PSF.

B. [ALTERNATE CONSTRUCTION SEQUENCES MAY BE CONSIDERED AND MAY REQUIRE SHORING AND/OR TEMPORARY LATERAL BRACING DESIGNED BY A LICENSED STRUCTURAL ENGINEER RETAINED BY CONTRACTOR.]

EXPANSION ANCHOR GENERAL NOTES

1. TYPICAL EXPANSION BOLTS ARE CARBON STEEL HILTI KWIK-BOLTS II AND SHALL COMPLY TO ICBO REPORT #4627 (2/2001).

ALLOWABLE LOAD WITH NORMAL WEIGHT CONCRETE (F'c=3000 PSI)					
DIA.	MINIMUM EFFECTIVE EMBED.	SHEAR	TENSION	TENSION TEST VALUE	TORQUE TEST VALUE
1/4"	2"	320#	440#	880#	7 FT-LBS.
3/8"	2-1/2"	880#	968#	1936#	25 FT-LBS.
1/2"	3-1/2"	1472#	1600#	3200#	45 FT-LBS.
5/8"	4"	2500#	2136#	4272#	95 FT.-LBS.
3/4	4 3/4"	3380#	2900#	5800#	225 FT.-LBS.
1"	6"	6900#	4248#	8496#	325 FT.-LBS.

ALLOWABLE LOAD WITH LIGHT WEIGHT CONCRETE (F'c=3000 PSI) OVER METAL DECK					
DIA.	MINIMUM EFFECTIVE EMBED.	SHEAR	TENSION	TENSION TEST VALUE	TORQUE TEST VALUE
1/4"	2"	320#	300#	600#	5 FT-LBS.
3/8"	2¼"	800#	573#	1147#	15 FT-LBS.
1/2"	2¼"	1096#	714#	1428#	25 FT-LBS.
5/8"	4"	2500#	1580#	3160#	75 FT.-LBS.

THESE LOADS CORRESPOND TO 80% OF THE ICBO ALLOWABLES. INCREASE OF 33% FOR COMBINATION WITH WIND OR SEISMIC FORCES IS ALLOWED. SPECIAL INSPECTION OF EXPANSION BOLTS IS REQUIRED.

2. INSTALLATION: INSTALL EXPANSION BOLTS IN ACCORDANCE WITH THE REQUIREMENTS GIVEN IN ICBO RESEARCH COMMITTEE RECOMMENDATIONS FOR THE SPECIFIC EXPANSION BOLT.
3. FIELD TESTING: TENSION TEST DRILLED IN ANCHORAGE TO 160 PERCENT TIMES THE ICBO ALLOWABLE LOAD WITH SPECIAL INSPECTION, OR TORQUE TEST TO VALUES AS TABULATED IN NOTE 1 ABOVE. TESTS SHALL BE MADE IN THE PRESENCE OF THE OWNER'S PROJECT REPRESENTATIVE. TEST 50% OF EACH DIAMETER GROUP OF EXPANSION BOLT, IF ANY ANCHOR FAILS TESTING, TEST ALL ANCHORS OF THE SAME CATEGORY NOT PREVIOUSLY TESTED UNTIL 20 CONSECUTIVE PASS. TESTING SHOULD OCCUR 24 HOURS MINIMUM AFTER INSTALLATION OF THE SUBJECT ANCHORS. ALL ANCHORS INSTALLED ON THE SAME DAY AS AN ANCHOR THAT FAILED SHALL BE TESTED, AND ALL COSTS OF SUCH TESTS AND INSPECTIONS SHALL BE DEDUCTED FROM THE CONTRACT SUM.
4. TENSION TESTS: APPLY TEST LOADS TO EXPANSION BOLTS WITHOUT REMOVING THE NUT, IF POSSIBLE. IF NOT, REMOVE NUT AND INSTALL A THREADED COUPLER TO THE SAME TIGHTNESS OF THE ORIGINAL NUT USING A TORQUE WRENCH AND APPLY LOAD. REACTION LOADS FROM TEST FIXTURES MAY BE APPLIED CLOSE TO THE ANCHOR BEING TESTED, PROVIDED THE BOLT IS NOT RESTRAINED FROM WITHDRAWING BY THE FIXTURE. TEST EQUIPMENT IS TO BE CALIBRATED BY AN APPROVED TESTING LABORATORY IN ACCORDANCE WITH STANDARD RECOGNIZED PROCEDURES. BOLTS SHOULD HAVE NO OBSERVABLE MOVEMENT AT THE TEST LOAD TO BE ACCEPTABLE. (OBSERVABLE MOVEMENT IS DEFINED AS THE WASHER UNDER THE NUT BECOMING LOOSE).
5. TORQUE WRENCH TEST: THE APPLICABLE TEST TORQUE MUST BE REACHED WITHIN ONE-HALF (1/2) TURN OF THE NUT.
6. WHEN INSTALLING DRILLED-IN ANCHORS AND /OR POWDER DRIVEN PINS IN EXISTING NON-PRESTRESSED REINFORCED CONCRETE, USE CARE AND CAUTION TO AVOID CUTTING OR DAMAGING THE EXISTING REINFORCING BARS. WHEN INSTALLING THEM INTO EXISTING PRESTRESSED CONCRETE (PRE OR POST TENSIONED), LOCATE THE PRESTRESSED TENDONS BY USING A NON DESTRUCTIVE METHOD PRIOR TO INSTALLATION. EXERCISE EXTREME CARE AND CAUTION TO AVOID CUTTING OR DAMAGING THE TENDONS DURING INSTALLATION. MAINTAIN A MINIMUM CLEARANCE OF ONE INCH BETWEEN THE REINFORCEMENT AND THE DRILLED-IN ANCHOR AND/OR PIN.
7. EXPANSION ANCHORS INSTALLED FROM THE UNDERSIDE OF METAL DECK SHALL BE LOCATED IN THE CENTER OF THE LOW FLUTE. THE MINIMUM EMBEDMENT SHALL BE 1 1/2" ABOVE THE TOP FLUTE OF THE DECK (EXCEPT 1/4" ANCHORS FOR CEILINGS). THE EFFECTIVE EMBEDMENT DEPTH SHALL BE 1/3 OF THE METAL DECK HEIGHT PLUS THE 1 1/2" MINIMUM NOTED ABOVE. MAINTAIN MINIMUM OF 1" CLEAR TO THE TOP OF CONCRETE.

LEGEND

- TYPE 1 — STEEL DECK TYPE AND DIRECTION REF 3/S7.1
- TYPE 1 — STEEL DECK TYPE AND DIRECTION WITH CONCRETE FILL REF 3/S7.1
- INDICATES CHANGE IN TOC ELEVATION
- F1 [-2'-6"] — SPREAD FOOTING TYPE AND TOP OF FOOTING ELEV REF 1/S5.2
- C2 — STEEL COLUMN TYPE REF 13/S7.2
- CMU WALL
- CONCRETE WALL
- S — — — S — DENOTES STEP IN FTG REF 12/S5.1
- [-3"] — STEEL BEAM ELEVATION RELATIVE TO NOMINAL FLOOR ELEVATION
- <+1"> — CAMBER (INCHES) IN STEEL BEAM UP AT MIDSPAN OF BEAM
- MOMENT CONNECTION REF 4, 10, 11, 12, 13 AND 16/S7.3
- BRACES ABOVE
- BRACES BELOW
- (10,5,10) — SHEAR STUDS ON TOP FLANGE OF STEEL BEAMS OR GIRDERS REF 7/S7.1
- GB-# [-1'-6"] — GRADE BEAM REF 3/S5.2, [-1'-6"] INDICATES TOP OF FOOTING ELEVATION WHERE NOT OTHERWISE DEFINED BY SPREAD FOOTING
- BRACE AT LOWER FLANGE OF BEAM REF 9/S7.3
- [F] — FULL DEPTH SHEAR PLATE REF 3/S7.2
- CVN — NOTCH-TOUGH ELECTRODES REF GENERAL NOTES
- 1 — 1"# BOLTS IN CONNECTION REF 3/S7.2
- BEND IN BEAM REF 14/S7.2
- (-0'-2½") — RELATIVE SLAB ELEVATION WITH RESPECT TO NOMINAL ELEVATION AT LEVEL

VI. ABBREVIATIONS

ø	DIAMETER
AB	ANCHOR BOLT
ARCH	ARCHITECTURAL
BLDG	BUILDING
BLK' G	BLOCKING
BM	BEAM
BOT	BOTTOM
CB	COLUMN BASE
CL	CENTER LINE
CJ	CONSTRUCTION JOINT
CLR	CLEAR
CMU	CONCRETE MASONRY UNIT
COL	COLUMN
CONN	CONNECTION
CONT	CONTINUOUS
CJP	COMPLETE PENETRATION
CTR	CENTER
CTRSK	COUNTERSINK
DET	DETAIL
DF	DOUGLAS FIR
DWG	DRAWING
(E)	EXISTING
EA	EACH
EE	EACH END
EF	EACH FACE
EL OR ELEV	ELEVATION
ELECT	ELECTRICAL
EN	END (OR EDGE) NAILING
EW	EACH WAY
EXT	EXTERIOR
FDN	FOUNDATION
FIN	FINISH
FL OR FLR	FLOOR
FOC	FACE OF CONCRETE
FOS	FACE OF STUD
FRM' G	FRAMING
FTG	FOOTING
GA	GAUGE
GALV	GALVANIZED
GLB	GLU-LAMINATED BEAM
HD	HOLD DOWN
HORIZ	HORIZONTAL
HSB	HIGH STRENGTH BOLT
HT	HEIGHT
INT	INTERIOR
JH	JOIST HANGER
JT	JOINT
LLH (LLV)	LONG LEG HORIZONTAL (VERTICAL)
LT	LIGHT
LT WT	LIGHT WEIGHT
MB	UNFINISHED MACHINE BOLTS
MAX	MAXIMUM
MECH	MECHANICAL
MFR	MANUFACTURER
MTL	METAL
MIN	MINIMUM
MISC	MISCELLANEOUS
NIC	NOT IN CONTRACT
NOM	NOMINAL
NTS	NOT TO SCALE
OC	ON CENTER
OD (ID)	OUTSIDE (INSIDE) DIAMETER
OPG	OPENING
OPP	OPPOSITE
PA	PURLIN ANCHOR
PAF	POWER ACTUATED FASTENER
PL	PLATE
PJP	PARTIAL PENETRATION
PLY	PLYWOOD
PT	POINT
PTN	PARTITION
REF	REFERENCE
REINF	REINFORCEMENT
REQ	REQUIRED
RWD	REDWOOD
SAD	SEE ARCHITECTURAL DRAWINGS
SCHED	SCHEDULE
SECT	SECTION
SHT	SHEET
SIM	SIMILAR
SPA	SPACE
SPEC	SPECIFICATION
SQ	SQUARE
ST	STRAP TIE
STAGG' D	STAGGERED
STD	STANDARD
STL	STEEL
STRUCT	STRUCTURAL
SYMM	SYMMETRICAL
T&B	TOP AND BOTTOM
T&G	TONGUE AND GROOVE
THRD' D	THREADED
TD	TIE DOWN
TOC	TOP OF CONCRETE
TO FTG	TOP OF FOOTING
TOS	TOP OF STEEL
TW	TOP OF WALL
TP	TOP OF PLATE
TYP	TYPICAL
UON	UNLESS OTHERWISE NOTED
VERT	VERTICAL
WP	WORK POINT
WT	WEIGHT

tBP
architecture
planning
interiors
management
tBP/Architecture
1000 Burnett Ave, Suite 140
Concord, CA 94520
ph: 925.246.6419 fx: 925.246.6495
architect

DASSE DESIGN INC.
STRUCTURAL ENGINEERS
55 Santa Rosa Avenue, Suite 330
Santa Rosa, CA 95404-4965
415.243.2991 fax 415.243.2994
consultant

FILE NO. 7-C1
DIV. OF THE STATE ARCHITECT
OFFICE OF REGULATION SERVICES
APPL NO. 01-109719
AC.
DATE

agency

SAN RAMON VALLEY CENTER
CONTRA COSTA COMMUNITY COLLEGE DISTRICT
SAN RAMON, CALIFORNIA

owner

tBP project number : 2021.00
file name:
drawn by: BH checked by:
date: 03-04-04 plot scale: 1:1

Rev:	date:	description:

drawing title: GENERAL NOTES
building no:
drawing no: S1.0
drawing of

FILE: E:\02B163\Struct\02b163S10.dwg03/05/04 at 16:21
XREF: E:\02B163\Struct\02b163-TB.dwg

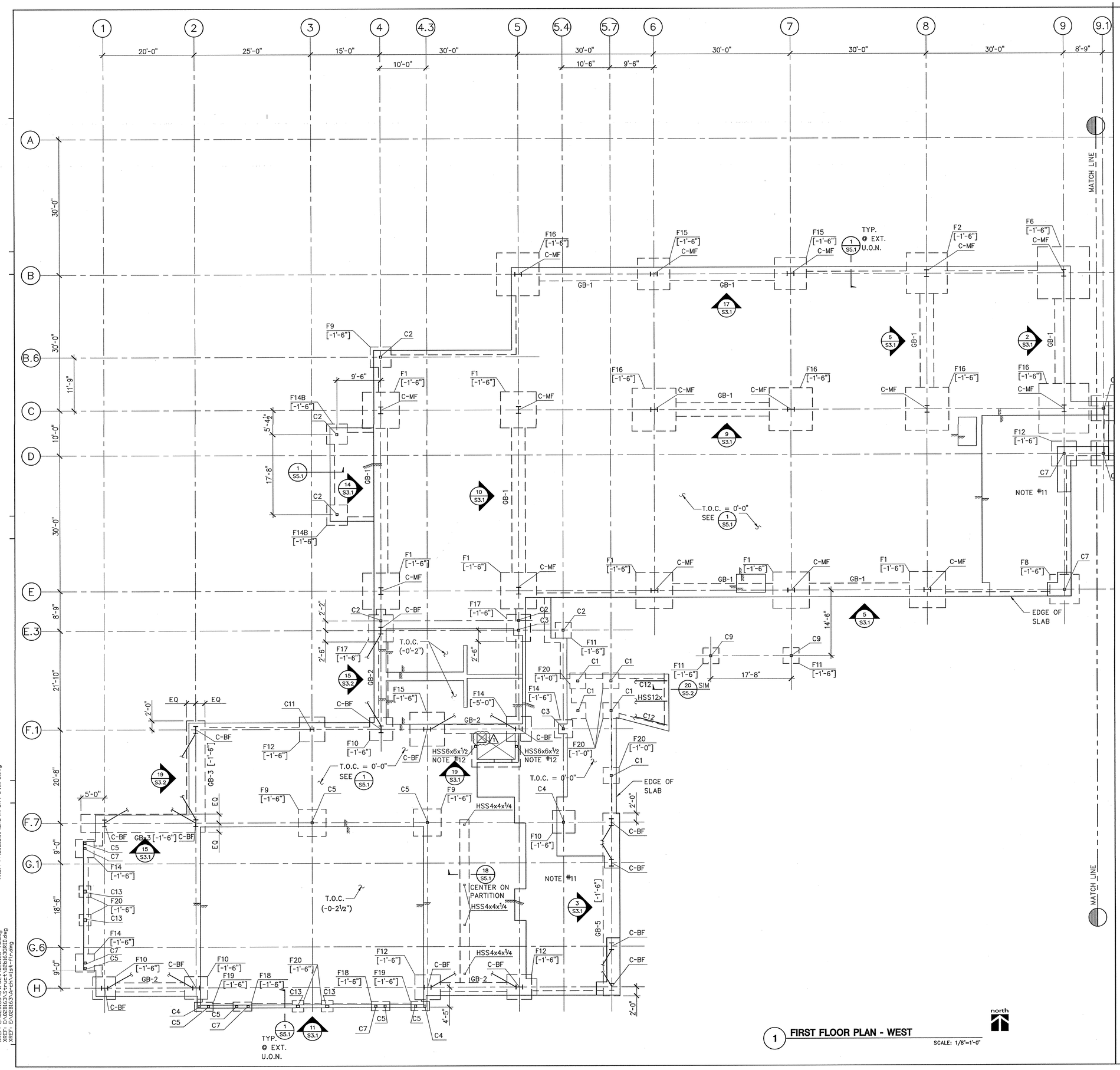

1 FIRST FLOOR PLAN - WEST

SCALE: 1/8"=1'-0"

FOUNDATION NOTES:

1. SEE GENERAL NOTES ON SHEET S1.0.
2. SEE TYPICAL CONCRETE DETAILS ON SHEET S5.1.
3. THE REFERENCE DATUM IS THE NOMINAL TOP OF CONCRETE ELEVATION AT THIS LEVEL.
4. FOUNDATION PLAN IS TAKEN ABOVE SLAB-ON-GRADE. NOMINAL TOP OF SLAB ELEVATION IS CALLED OUT IN PLAN.
5. ELEVATIONS OF TOP OF FOOTINGS WITH RESPECT TO REFERENCE ELEVATION ARE SHOWN THUS: [-1'-6"].
6. EXCAVATIONS SHALL BE MADE AS NEAR AS POSSIBLE TO THE NEAT LINES REQUIRED BY THE SIZE AND SHAPE OF THE STRUCTURE. NO MATERIAL IS TO BE EXCAVATED UNNECESSARILY.
7. ALL FOUNDATION EXCAVATIONS MUST BE REVIEWED AND APPROVED BY THE SOILS ENGINEER PRIOR TO PLACEMENT OF CONCRETE.
8. VERIFY LOCATION OF UNDERGROUND UTILITIES BEFORE EXCAVATION. NOTIFY ARCHITECT PRIOR TO EXCAVATION IN THE EVENT SUCH UTILITIES ARE ENCOUNTERED.
9. FOR DRAINAGE DETAILS, SUMPS, PITS, DAMP PROOFING, TRENCHES, CURBS, EXTERIOR WALKS, UTILITIES, EQUIPMENT DETAILS, STEPS, ETC., SEE DRAWINGS OTHER THAN STRUCTURAL. NOTE ALL CURBS ARE NOT SHOWN ON STRUCTURAL DRAWINGS. 1
10. SLAB CONSTRUCTION AND CONTROL JOINT LOCATIONS SHALL BE APPROVED BY THE ARCHITECT PRIOR TO PLACING ANY CONCRETE. SEE DETAIL 1/S5.1.
11. TOP OF CONCRETE ELEVATIONS FOR EXTERIOR SLAB TO BE DEFINED ON ARCHITECTURAL DRAWINGS.
12. SEE 19 & 20/S7.8 FOR ELEVATOR DETAILS.
13. PADS & CURBS ARE LOCATED ON ARCH, MECHANICAL, PLUMBING & ELECTRICAL DRAWINGS. SEE TYPICAL DETAILS FOR CURBS & PADS.
14. EDGE OF SLAB AND EXTENT OF DEPRESSIONS ARE DEFINED BY ARCHITECTURAL DRAWINGS.
15. TOP OF STEEL ELEVATIONS AT STAIRS AND LANDINGS ARE DEFINED BY ARCHITECTURAL DRAWINGS.

tBP architecture planning interiors management

tBP/Architecture
1000 Burnett Ave, Suite 140
Concord, CA 94520
ph: 925.246.6419 fx: 925.246.6495

architect

DASSE DESIGN INC. STRUCTURAL ENGINEERS
33 New Montgomery St., Suite 850
San Francisco, CA 94105
415/243-9400 — Fax 415/243-9195

consultant

FILE NO. 7-C1
APPROVED FOR STAMP
DIV. OF THE STATE ARCHITECT
OFFICE OF REGULATION SERVICES
APPL NO. 01-105719
FLS SS
DATE 6-9-04

agency

SAN RAMON VALLEY CENTER

CONTRA COSTA COMMUNITY COLLEGE DISTRICT

SAN RAMON, CALIFORNIA

owner

tBP project number : 20212.00

file name:

drawn by: checked by:

date: 03-04-04 plot scale: 1:1

Rev:	date:	description:
1	05-26-04	

drawing title: building no.:

FIRST FLOOR PLAN WEST

drawing no.:

S2.11

drawing of

FILE: E:\02B163\Struct\02b163S211.dwg05/27/04 at 16:47 XREF: P:\20212.00\CAD\Arch\=stairs.dwg
XREF: E:\02B163\Struct\02b163-TB.dwg
XREF: E:\02B163\Struct\02b163GRID.dwg
XREF: E:\02B163\Arch\=1st-flr.dwg

FIRST FLOOR PLAN NOTES:

REFER TO NOTES ON SHEET S2.11

MATCH LINE

MATCH LINE

NOTE #11

NOTE #12

PROVIDE #4 TIES @ 4" O.C. WITHIN THIS REGION OF GRADE BM.

8" CMU WALL, TYP U.O.N.

4'-0" TYP. @ CMU WALL FTG. U.O.N.

TYP. EA EA. SIDE OF CANOPY

TYP. @ CMU U.O.N.

T.O.C. = 0'-0" SEE 1/S5.1

T.O.C. (-0'-2½")

TOC (-0'-2")

TOC (-0'-2½")

TYP. @ EXT.

TYP. @ EXT. U.O.N.

SIM.

HSS6x6x½ NOTE #12

TYPE 1

C12x20.7

HSS10x6x¼

W10x44

W10x14

C15x33.9

W14x176

HSS10x

HSS12x

GB-2

GB-2A

GB-9 [-1'-6"]

GB-8 [-1'-6"]

GB-10 [-1'-6"]

C-BF

F1 [-1'-6"]

F2 [-1'-6"]

F3 [-1'-6"]

F4 [-1'-6"]

F5 [-1'-6"]

F8 [-1'-6"]

F9 [-1'-6"]

F10 [-1'-6"]

F11 [-1'-6"]

F12 [-1'-6"]

F14 [-1'-6"]

F15 [-1'-6"]

F16 [-1'-6"]

F20 [-1'-0"]

F10 [-1'-6"] C2

F20 [-1'-0"] C1

F14 [-5'-6"]

F20 [-1'-0"] C1

F14 [-5'-6"]

F20 [-1'-0"] C1

F20 [-1'-0"] C1

F20 [-1'-0"] C1

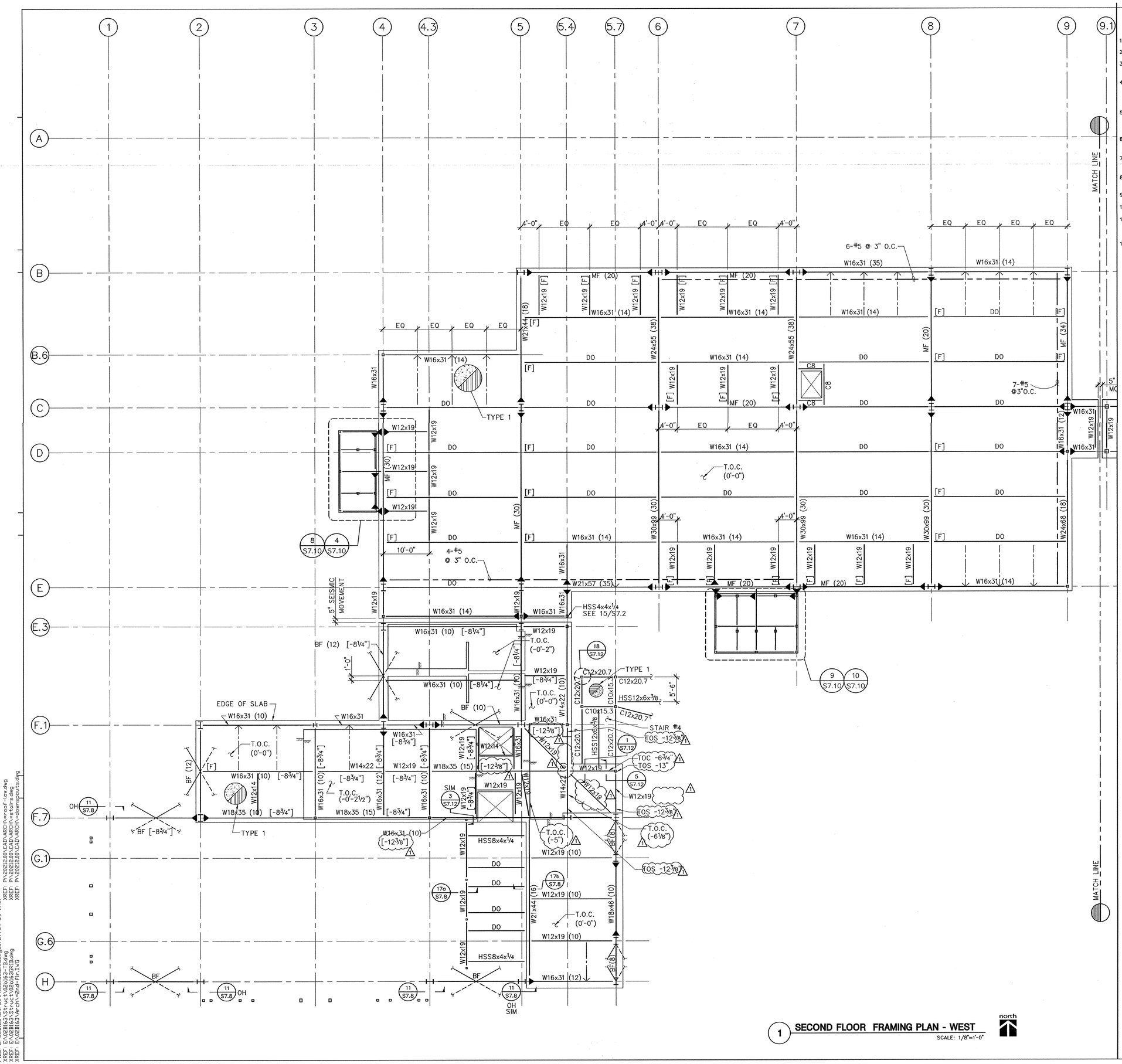

1 SECOND FLOOR FRAMING PLAN - WEST

SCALE: 1/8"=1'-0"

north

FLOOR FRAMING NOTES:

1. SEE GENERAL NOTES ON SHEET S1.0.
2. SEE SHEET S7.1 & S7.2 FOR TYPICAL STEEL NOTES AND DETAILS.
3. NOMINAL 2ND FLOOR LEVEL (TOC) IS +16-0" RELATIVE TO REFERENCE DATUM. ELEVATIONS ARE SPECIFIED RELATIVE TO THE NOMINAL FLOOR LEVEL.
4. TOPS OF STEEL BEAMS AND GIRDERS ARE FLUSH AND OCCUR IMMEDIATELY BELOW METAL DECK, UNLESS OTHERWISE NOTED. ELEVATIONS TO TOP OF STEEL (T.O.S.), WHERE GIVEN, ARE WITH RESPECT TO NOMINAL FLOOR ELEVATION +[0'-0"] AND SHOWN THUS: T.O.S. [+12'-0"].
5. TOP OF STEEL COLUMN WHERE DIFFERENT FROM TOP OF BEAMS IS SHOWN AS T.O. COL [+5'-0"] AND IS DEFINED WITH RESPECT TO NOMINAL FLOOR ELEVATION.
6. WHERE SLABS ARE DEPRESSED, DEPRESS STEEL FRAMING TO ACCOMODATE DEPRESSIONS.
7. MARKS "DO" APPLY TO BEAM SIZES, ELEVATIONS AND CONNECTIONS. UNLESS SUPPLEMENTAL INFORMATION PROVIDED.
8. FOR EDGE OF DECK DIMENSIONS, FOR BOTH INTERIOR OPENINGS AND EXTERIOR DECK EDGES SEE ARCHITECTURAL DRAWINGS.
9. MARK C8 DENOTES C8x11.5 STRUCTURAL STEEL SECTION.
10. MARK W8 DENOTES W8x10 STRUCTURAL STEEL SECTION.
11. MARKS BF AND MF DENOTE BRACE FRAME BEAMS AND MOMENT FRAME BEAMS, RESPECTIVELY. SEE ELEVATIONS ON SHEETS S3.1 AND S3.2 FOR BEAM SIZES.
12. TOP OF STEEL AT STAIRS AND LANDINGS IS DEFINED BY ARCHITECTURAL STAIR DRAWINGS.

tBP architecture planning interiors management

tBP/Architecture
1000 Burnett Ave, Suite 140
Concord, CA 94520
ph: 925.246.6419 fx: 925.246.6495

architect

DASSE DESIGN INC.
STRUCTURAL ENGINEERS
33 New Montgomery St., Suite 800
San Francisco, CA 94105
415/243-9400 - Fax 415/243-9105

consultant

agency

SAN RAMON VALLEY CENTER

CONTRA COSTA COMMUNITY COLLEGE DISTRICT

SAN RAMON, CALIFORNIA

owner

tBP project number: 20212.00

file name:

drawn by: checked by:

date: 03-04-04 plot scale: 1:1

Rev:	date:	description:
1	05-26-04	

drawing title: building no.:

SECOND FLOOR FRAMING PLAN - WEST

drawing no.:

S2.21

drawing of

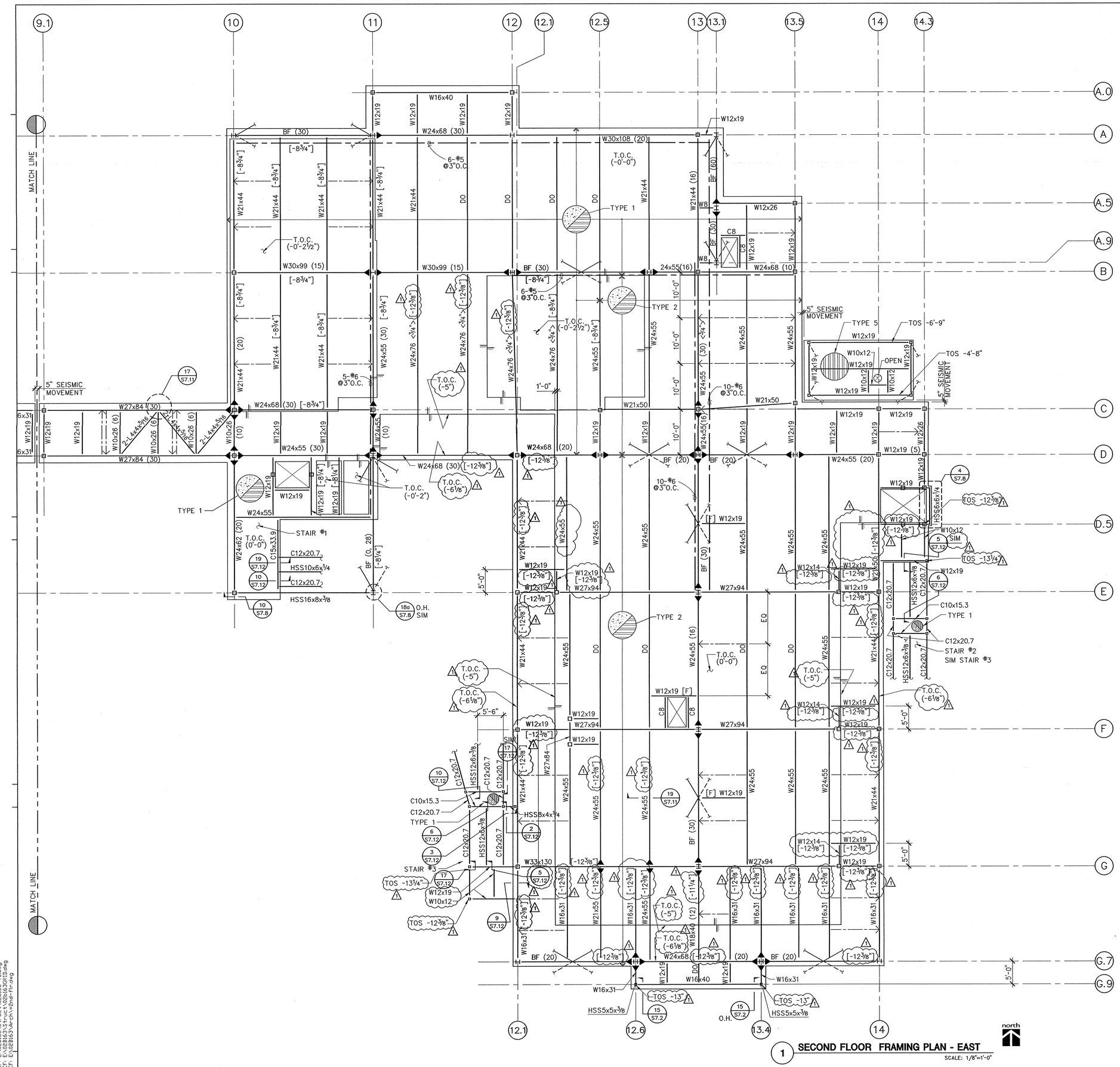

1 SECOND FLOOR FRAMING PLAN - EAST

SCALE: 1/8"=1'-0"

SHEET NOTES

1. REFER TO NOTES ON SHEET S2.21.

tBP
architecture
planning
interiors
management

tBP/Architecture
1000 Burnett Ave, Suite 140
Concord, CA 94520
ph: 925.246.6419 fx: 925.246.6495

architect

DASSE DESIGN INC.
STRUCTURAL ENGINEERS
33 New Montgomery St., Suite 850
San Francisco, CA 94105
415.243-9400 - Fax 415.243-9455

consultant

agency

SAN RAMON VALLEY CENTER

CONTRA COSTA COMMUNITY COLLEGE DISTRICT

SAN RAMON, CALIFORNIA

owner

tBP project number : 20212.00

file name:

drawn by: checked by:

date: 03-09-04 plot scale: 1:1

Rev:	date:	description:
1	05-26-04	

drawing title: building no.:

SECOND FLOOR PLAN EAST

drawing no.:

S2.22

drawing of

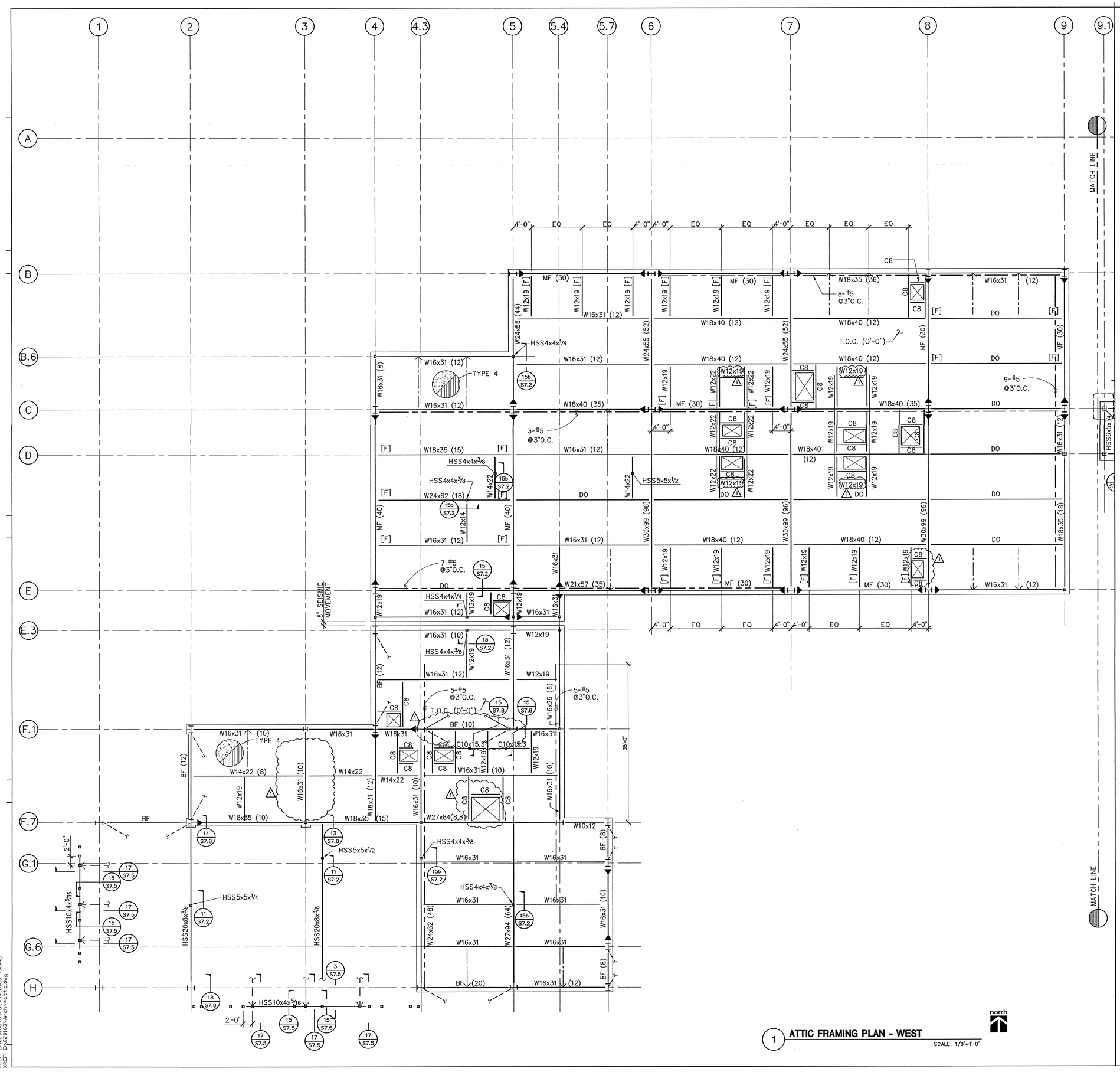

1 ATTIC FRAMING PLAN - WEST

SCALE: 1/8"=1'-0"

SHEET NOTES

1. REFER TO NOTES ON SHEET S2.21.
2. NOMINAL ATTIC FLOOR LEVEL (TOC) IS +32'-0" RELATIVE TO REFERENCE REFERENCE DATUM. ELEVATIONS ARE SPECIFIED RELATIVE TO THE NOMINAL FLOOR LEVEL.
3. MARK C8 DENOTES C8x11.5 STRUCTURAL STEEL SECTION.
4. MARK W8 DENOTES W8x10 STRUCTURAL STEEL SECTION.
5. PADS & CURBS ARE LOCATED ON ARCH, MECHANICAL, PLUMBING & ELECTRICAL DRAWINGS. SEE TYPICAL DETAILS FOR CURBS & PADS.

tBP architecture planning interiors management

tBP/Architecture
1000 Burnett Ave, Suite 140
Concord, CA 94520
ph: 925.246.6419 fx: 925.246.6495

architect

DASSE DESIGN INC. STRUCTURAL ENGINEERS
33 New Montgomery St., Suite 800
San Francisco, CA 94105
415/243-8400 – Fax 415/243-8495

consultant

agency

SAN RAMON VALLEY CENTER

CONTRA COSTA COMMUNITY COLLEGE DISTRICT

SAN RAMON, CALIFORNIA

owner

tBP project number : 2021200

file name:

drawn by: checked by:

date: 03-04-04 plot scale: 1:1

Rev:	date:	description:
1	05-26-04	

drawing title: building no.:

ATTIC FRAMING PLAN WEST

drawing no.:

S2.31

drawing of

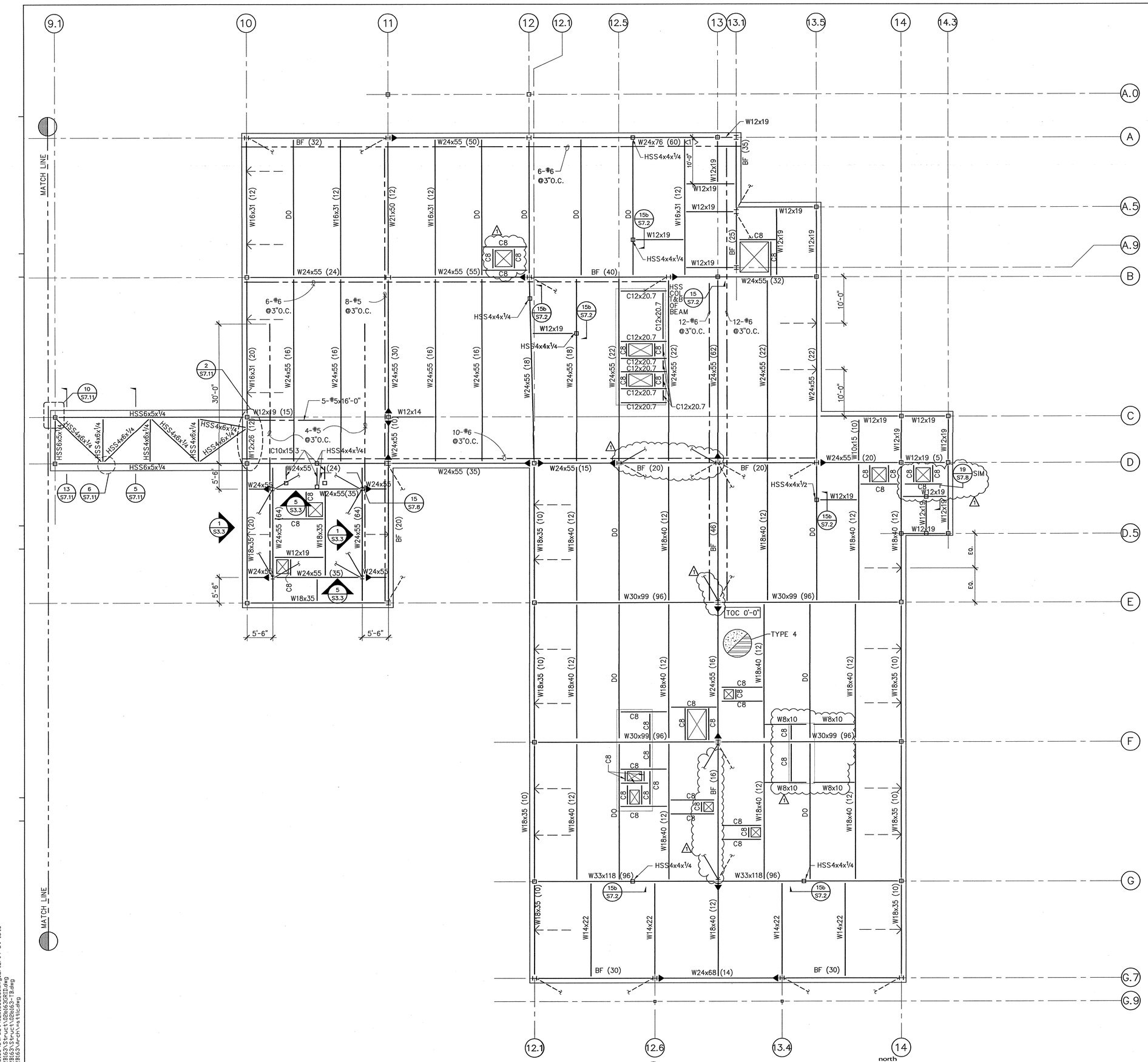

1 ATTIC PLAN - EAST

SCALE: 1/8"=1'-0"

north

SHEET NOTES

1. REFER TO NOTES ON SHEET S2.31.

tBP architecture planning interiors management

tBP/Architecture
1000 Burnett Ave, Suite 140
Concord, CA 94520
ph: 925.246.6419 fx: 925.246.6495

architect

DASSE DESIGN INC. STRUCTURAL ENGINEERS

consultant

agency

SAN RAMON VALLEY CENTER

CONTRA COSTA COMMUNITY COLLEGE DISTRICT

SAN RAMON, CALIFORNIA

owner

tBP project number : 20212.00

file name:

drawn by: BH checked by:

date: 03-04-04 plot scale: 1:1

Rev:	date:	description:
1	05-26-04	

drawing title: building no.:

ATTIC PLAN EAST

drawing no.:

S2.32

drawing of

ROOF FRAMING NOTES:

1. SEE GENERAL NOTES ON SHEET S1.0.
2. SEE FRAMING NOTES ON SHEET S2.21 FOR INFORMATION NOT NOTED.
3. ROOF ELEVATIONS ARE SPECIFIED RELATIVE TO THE ATTIC LEVEL NOMINAL FLOOR ELEVATION.
4. TOP OF STRUCTURAL STEEL VARIES. ELEVATIONS ON SLOPING SURFACES ARE PROVIDED AT REPRESENTATIVE POINTS. OMITTED ELEVATIONS TO BE INTERPOLATED IN CONJUNCTION WITH ARCHITECTURAL AND OTHER CONTRACT DOCUMENTS.
5. FOR ROOF FEATURES, DRAINS, EQUIPMENT, ETC., SEE DRAWINGS OTHER THAN STRUCTURAL.
6. ROOF OPENINGS SHOWN ON PLAN ARE NOT COMPLETE AS TO SIZE, NUMBER AND LOCATION. SEE DRAWINGS OTHER THAN STRUCTURAL FOR COMPLETE INFORMATION ON ROOF PENETRATIONS. SEE ARCHITECTURAL DRAWINGS FOR EDGE OF ROOF DECK.
7. CONTRACTOR SHALL COORDINATE THE LOCATION OF EQUIPMENT SUPPORT BEAMS WITH EQUIPMENT REQUIREMENTS.
8. MARK C8 DENOTES C8x11.5 STRUCTURAL STEEL SECTION.
9. MARK W8 DENOTES W8x10 STRUCTURAL STEEL SECTION.
10. ALL METAL DECK AT ROOF IS TYPE 3 U.O.N.

1 **ROOF FRAMING PLAN - WEST**
SCALE: 1/8"=1'-0"

FILE: E:\02B163\Struct\02b163S241.dwg05/27/04 at 1651
XREF: P:\2021200\CAD\CD Phase 75%\ARCH\roof-low.dwg
XREF: E:\02B163\Struct\02b163-TB.dwg
XREF: E:\02B163\Struct\02b163GRID.dwg
XREF: E:\02B163\Arch\roof.dwg

tBP Architecture
1000 Burnett Ave, Suite 140
Concord, CA 94520
ph: 925.246.6419 fx: 925.246.6495

architecture
planning
interiors
management

architect

DASSE DESIGN INC.
STRUCTURAL ENGINEERS
33 New Montgomery St., Suite 850
San Francisco, CA 94105
415.243.2600 fax 415.243.2646

consultant

P.E. NO. C-51
APPROVED
FOR CONSTRUCTION
OF THE STATE ARCHITECT
OFFICE OF REGULATION SERVICES
APPL NO. 01-105718
BY
DATE 6-04

agency

SAN RAMON VALLEY CENTER

CONTRA COSTA COMMUNITY COLLEGE DISTRICT
SAN RAMON, CALIFORNIA

owner

tBP project number : 2021.00
file name:
drawn by: checked by:
date: 05-04-04 plot scale: 1:1

Rev:	date:	description:
1	05-26-04	

drawing title: ROOF FRAMING PLAN WEST
building no.:
drawing no.: S2.41
drawing of

ROOF FRAMING NOTES:

1. REFER TO NOTES ON SHEET S2.41.

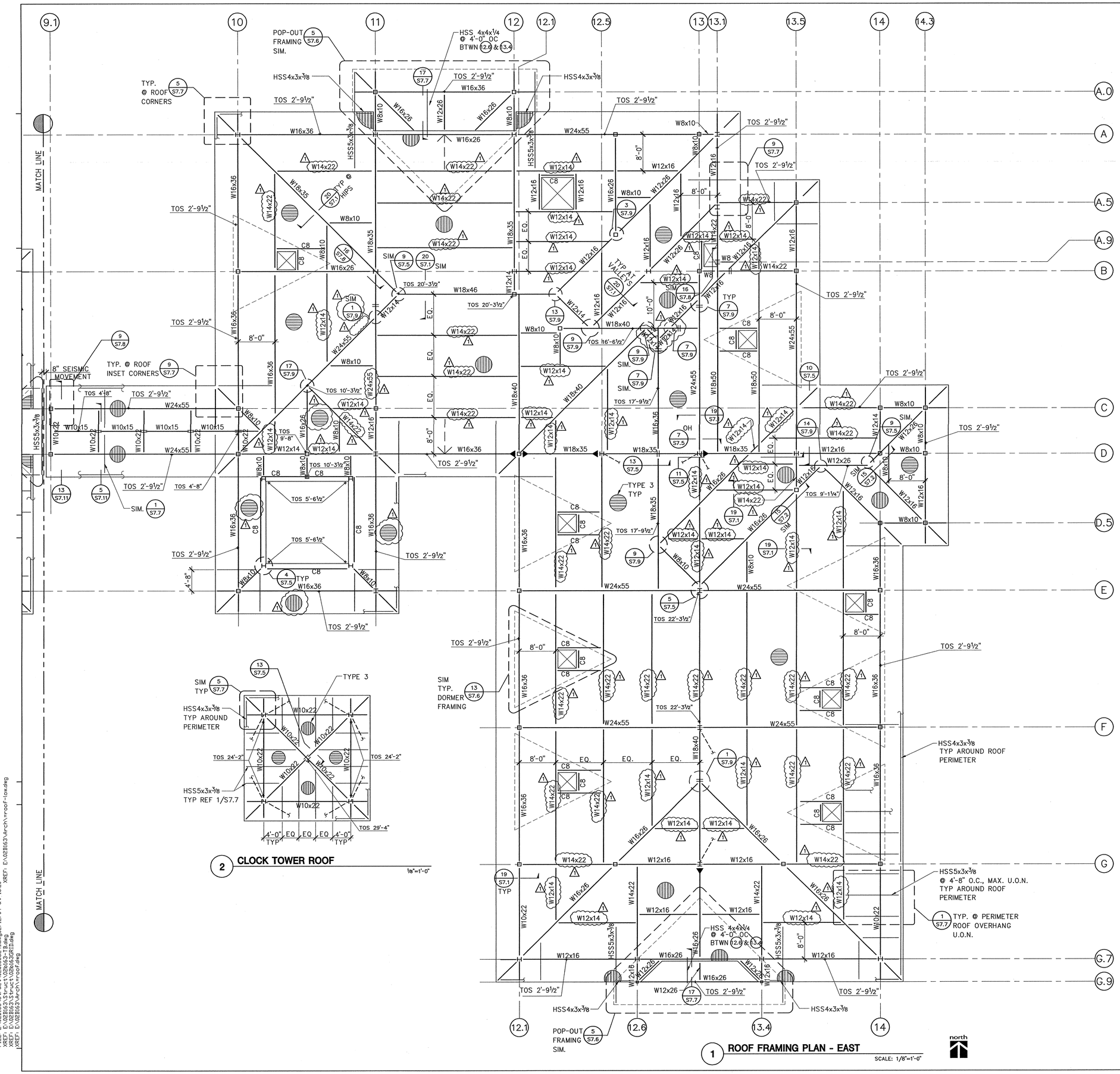

2 **CLOCK TOWER ROOF**

⅛"=1'-0"

1 **ROOF FRAMING PLAN - EAST**

SCALE: 1/8"=1'-0"

north

tBP
architecture
planning
interiors
management

tBP/Architecture
1000 Burnett Ave, Suite 140
Concord, CA 94520
ph: 925.246.6419 fx: 925.246.6495

architect

DASSE DESIGN INC.
STRUCTURAL ENGINEERS
317 Diablo Road, Ste. 200
Danville, CA 94526
415/Zac-5400 ~ Fax 415/726-1985

consultant

FILE NO. 2-241
APPROVED
DIVISION OF THE STATE ARCHITECT
OFFICE OF REGULATION SERVICES
APPL NO. 01-110718
FLS — SS
DATE 6-9-04

agency

SAN RAMON VALLEY CENTER

CONTRA COSTA COMMUNITY COLLEGE DISTRICT

SAN RAMON, CALIFORNIA

owner

tBP project number : 2021.00

file name:

drawn by: checked by:

date: 03-09-04 plot scale: 1:1

Rev:	date:	description:
1	05-26-04	

drawing title: ROOF FRAMING PLAN EAST

building no:

drawing no: S2.42

drawing of

XREF: E:\02B163\Struct\02b163s241.dwg02/12/04 at 15:20
XREF: E:\02B163\Struct\02b163s231.dwg
XREF: E:\02B163\Struct\02b163s221.dwg
XREF: E:\02B163\Arch\roof-low.dwg
XREF: E:\02B163\Arch\roof.dwg

FILE: E:\02B163\Struct\02b163s241.dwg02/12/04 at 15:20

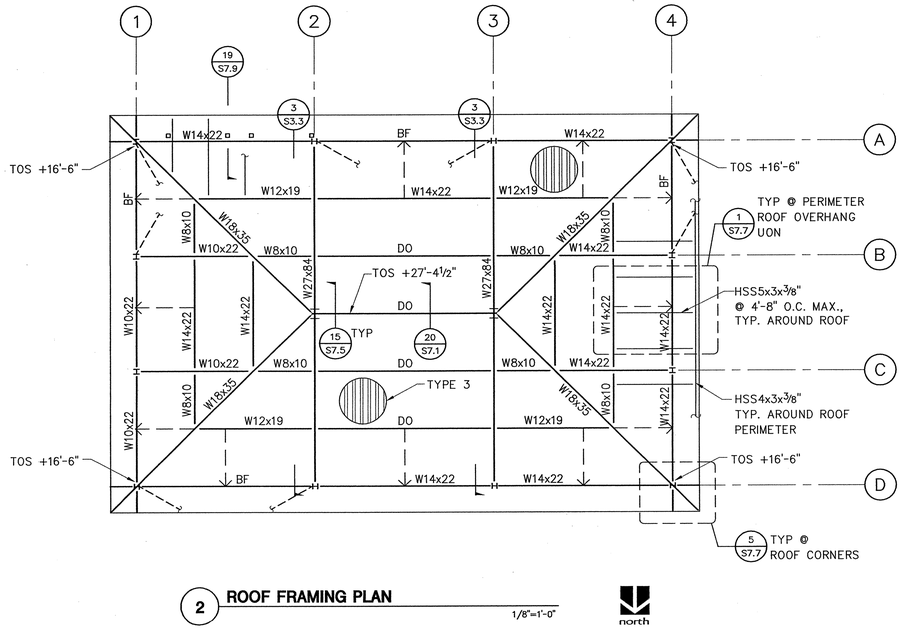

2 ROOF FRAMING PLAN

1/8"=1'-0"

north

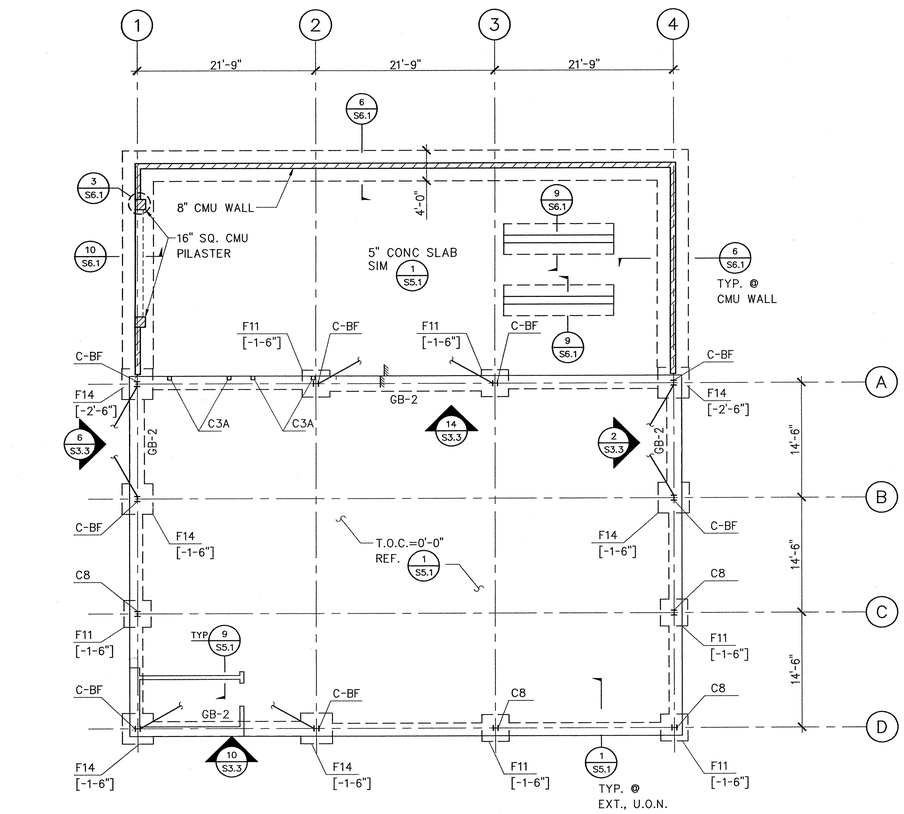

1 FOUNDATION PLAN

1/8"=1'-0"

north

FIRST FLOOR PLAN NOTES:

1. REFER TO NOTES ON SHEET S2.11.
2. FOR DATUM OF CENTRAL PLANT REFER TO ARCHITECTURAL DRAWINGS.
3. PAD & CURBS ARE LOCATED ON ARCH, MECHANICAL, PLUMBING, AND ELECTRICAL DRAWINGS. SEE TYPICAL DETAILS FOR CURBS & PADS.

ROOF FRAMING NOTES:

1. REFER TO NOTES ON SHEET S2.41.
2. TOP OF STEEL ELEVATIONS OF CENTRAL PLANT ROOF ARE GIVEN WITH RESPECT TO TYPICAL TOC ELEVATION

tBP
architecture
planning
interiors
management

LICENSED ARCHITECT ◆ VINCENT MENKOW, AIA ◆ No. C-9892 ◆ STATE OF CALIFORNIA

tBP/Architecture
1000 Burnett Ave, Suite 140
Concord, CA 94520
ph: 925.246.6419 fx: 925.246.6495

architect

DASSE DESIGN INC.
STRUCTURAL ENGINEERS
33 New Montgomery St., Suite 800
San Francisco, CA 94105
415/243-8400 ~ Fax 415/243-8995

PROFESSIONAL ENGINEER ◆ ROBERT R. SUTTON ◆ No. S-5813 ◆ STATE OF CALIFORNIA

consultant

FILE NO. 7-01

IDENTIFICATION STAMP
DEPT. OF THE STATE ARCHITECT
OFFICE OF REGIONAL SERVICES
APPL. NO. 01-105378
AC ___ FLS ___ SS ___
DATE ___

agency

SAN RAMON VALLEY CENTER

CONTRA COSTA COMMUNITY COLLEGE DISTRICT

SAN RAMON, CALIFORNIA

owner

tBP project number : 20212.00

file name:

drawn by: JDS checked by:

date: 03-09-04 plot scale: 1:1

Rev:	date:	description:

drawing title: CENTRAL PLANT

building no:

drawing no.: S2.51CP

drawing of

FILE: E:\02B163\Struct\02b163S251CP.dwg@3/15/04 at 14:51
XREF: E:\02B163\Struct\02b163-TB.dwg
XREF: E:\02B163\Mech\Vcurrent\02b163-TB.dwg
XREF: E:\02B163\Arch\08-4-03\10ALL_CP.dwg

96

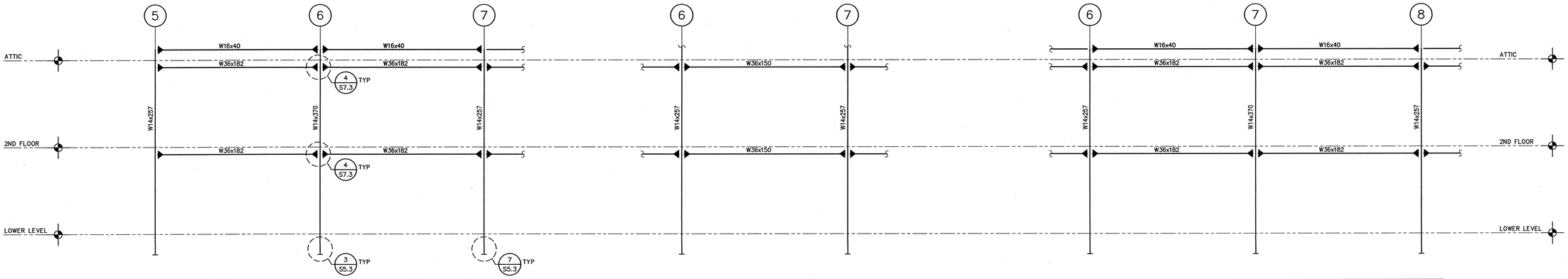

ANCHOR RODS		4–¾"ø		4–¾"ø		4–¾"ø		4–¾"ø		4–¾"ø		4–¾"ø		4–¾"ø		4–¾"ø		4–¾"ø	
ANCHOR EMBED		12"		12"		12"		12"		12"		12"		12"		12"		12"	
BASE PLATE	t_p	¾"		¾"		¾"		¾"		¾"		¾"		¾"		¾"		¾"	
	DETAIL	15/S7.3		15/S7.3		15/S7.3		15/S7.3		15/S7.3		15/S7.3		15/S7.3		15/S7.3		15/S7.3	

17 MOMENT FRAME LINE B
ADMINISTRATION BUILDING
1/8"=1'-0"

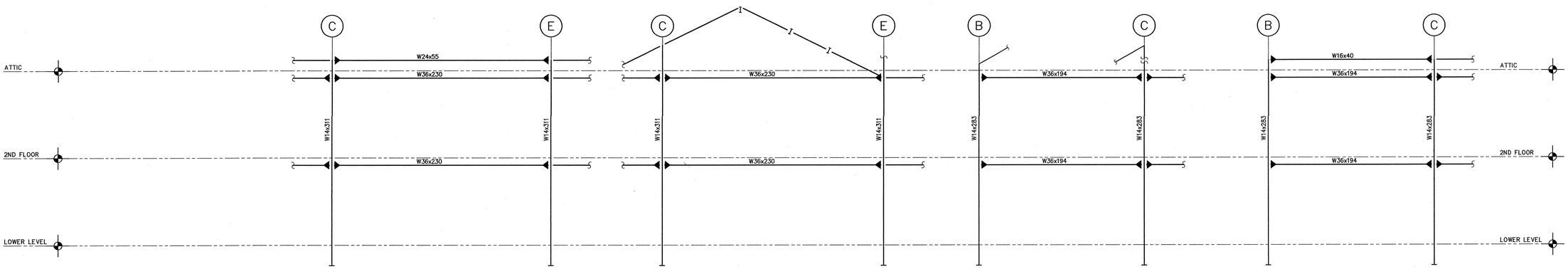

9 MOMENT FRAME LINE C
ADMINISTRATION BUILDING
1/8"=1'-0"

5 MOMENT FRAME LINE E
ADMINISTRATION BUILDING
1/8"=1'-0"

NOTE:
FOR ALL BEAMS WHERE SIZES ARE SHOWN IN DET. 2, 5, 6, 9, 10, 14 AND 17 REFER TO 1/S7.3.

ANCHOR RODS		4–¾"ø		4–¾"ø		4–¾"ø		4–¾"ø		4–¾"ø		4–¾"ø		4–¾"ø		4–¾"ø		4–¾"ø	
ANCHOR EMBED		12"		12"		12"		12"		12"		12"		12"		12"		12"	
BASE PLATE	t_p	¾"		¾"		¾"		¾"		¾"		¾"		¾"		¾"		¾"	
	DETAIL	15/S7.3		15/S7.3		15/S7.3		15/S7.3		15/S7.3		15/S7.3		15/S7.3		15/S7.3		15/S7.3	

14 MOMENT FRAME LINE 4
ADMINISTRATION BUILDING
1/8"=1'-0"

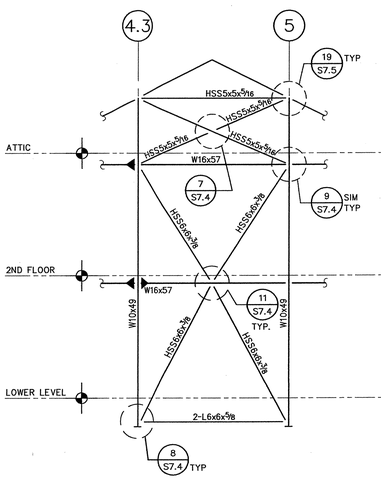

10 MOMENT FRAME LINE 5
ADMINISTRATION BUILDING
1/8"=1'-0"

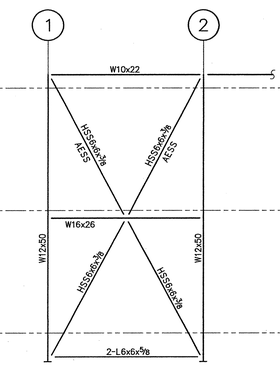

6 MOMENT FRAME LINE 8
ADMINISTRATION BUILDING
1/8"=1'-0"

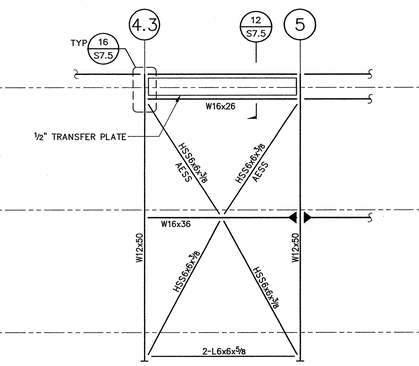

2 MOMENT FRAME LINE 9
ADMINISTRATION BUILDING
1/8"=1'-0"

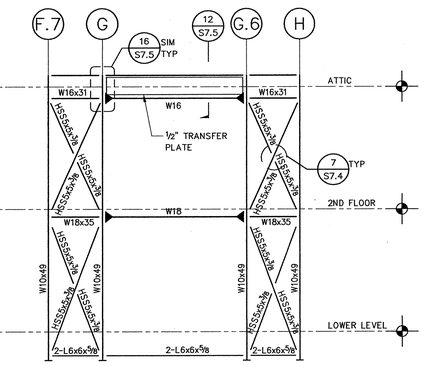

ANCHOR RODS		4–1⅛"ø		4–1⅛"ø		4–1⅛"ø		4–1¼"ø		4–1⅛"ø		4–1⅛"ø		4–1⅛"ø	4–1⅛"ø		4–1⅛"ø	4–1⅛"ø	
ANCHOR EMBED		18"		18"		18"		18"		18"		18"		18"	18"		18"	18"	
BASE PLATE	t_p x B x C	1½"x18"x1'-6"		1½"x18"x1'-6"		1"x18"x1'-6"		1¼"x18"x1'-6"		¾"x20"x1'-6"		¾"x20"x1'-8"		1"x20"x1'-8"	1"x18"x1'-6"	1"x18"x1'-6"	1"x20"x1'-8"	1"x18"x1'-6"	1"x18"x1'-6"
	DETAIL	4/S7.4		4/S7.4		4/S7.4		4/S7.4		4/S7.4		4/S7.4		4/S7.4	4/S7.4	4/S7.4	4/S7.4	4/S7.4	4/S7.4

19 BRACE FRAME LINE F.1
LIBRARY BUILDING
1/8"=1'-0"

15 BRACE FRAME LINE F.7
LIBRARY BUILDING
1/8"=1'-0"

11 BRACE FRAME LINE H
LIBRARY BUILDING
1/8"=1'-0"

NOTE:
1- ALL STEEL MEMBERS WHOSE SIZE IS CALLED OUT ON SHEETS S3.1, S3.2, AND S3.3 ARE PART OF THE SEISMIC-FORCE-RESISTING SYSTEM.

2- ALL STEEL MEMBERS THAT ARE A PART OF THE SEISMIC-FORCE-RESISTING SYSTEM WILL BE ASSUMED TO BE IN "SEISMIC WELD DEMAND CATAGORY B" AND SEISMIC WELD CONSEQUENCE CATAGORY M" UNLESS NOTED OTHERWISE.

3- ALL MOMENT FRAME MEMBERS CALLED OUT ON THIS SHEET SHALL BE CONSIDERED TO BE IN "SEISMIC WELD CONSEQUENCE CATAGORY H"

3 BRACE FRAME LINE 5.7
LIBRARY BUILDING
1/8"=1'-0"

FILE: E:\02B163\St-uct\02B163S3I.dwg03/22/04 at 16:07
XREF: E:\02B163\St-uct\02b163-TB.dwg

tBP
architecture
planning
interiors
management

tBP/Architecture
1000 Burnett Ave, Suite 140
Concord, CA 94520
ph: 925.246.6419 fx: 925.246.6495

LICENSED ARCHITECT · VINCENT MASONE, AIA · No. C-9880 · REGISTERED 12-31-05 · STATE OF CALIFORNIA

architect

DASSE DESIGN INC.
STRUCTURAL ENGINEERS
33 New Montgomery St., Suite 850
San Francisco, CA 94105-4585
415.243-0555 fax 415.765-1185

REGISTERED PROFESSIONAL ENGINEER · ROBERT R. SUTTON · No. 4466 · Exp. 12-31-05 · STRUCTURAL · STATE OF CALIFORNIA

consultant

FILE NO. 7-C1

DIVISION OF THE STATE ARCHITECT
OFFICE OF REGULATION SERVICES

APPL NO. 01-105719

AC. FS SS

DATE 3/31/04

agency

SAN RAMON VALLEY CENTER
CONTRA COSTA COMMUNITY COLLEGE DISTRICT
SAN RAMON, CALIFORNIA

owner

tBP project number : 20212.00

file name:

drawn by: BH checked by:

date: 03-04-04 plot scale: 1:1

Rev:	date:	description:

drawing title: BUILDING FRAME ELEVATIONS

building no:

drawing no: S3.1

drawing of

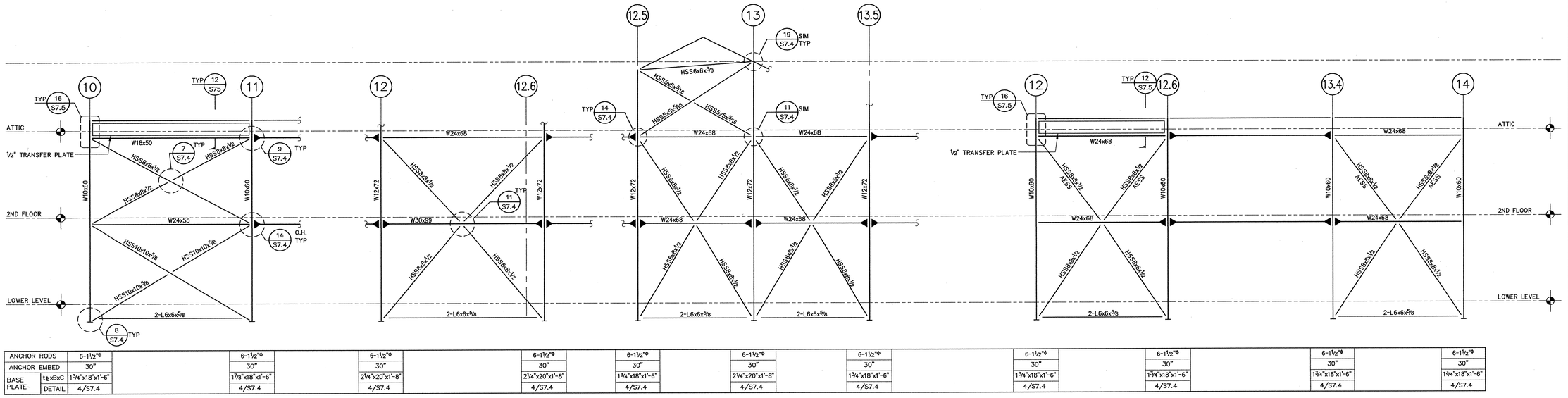

ANCHOR RODS		6-1½"Φ		6-1½"Φ		6-1½"Φ		6-1½"Φ	6-1½"Φ	6-1½"Φ		6-1½"Φ		6-1½"Φ		6-1½"Φ		6-1½"Φ		6-1½"Φ		6-1½"Φ	
ANCHOR EMBED		30"		30"		30"		30"	30"	30"		30"		30"		30"		30"		30"		30"	
BASE PLATE	t₂xBxC	1¾"x18"x1'-6"		1⅞"x18"x1'-6"		2¼"x20"x1'-8"		2¼"x20"x1'-8"	1¾"x18"x1'-6"	2¼"x20"x1'-8"		1¾"x18"x1'-6"		1¾"x18"x1'-6"		1¾"x18"x1'-6"		1¾"x18"x1'-6"		1¾"x18"x1'-6"		1¾"x18"x1'-6"	
	DETAIL	4/S7.4		4/S7.4		4/S7.4		4/S7.4	4/S7.4	4/S7.4		4/S7.4		4/S7.4		4/S7.4		4/S7.4		4/S7.4		4/S7.4	

17 BRACE FRAME LINE A
LABORATORY BUILDING
1/8"=1'-0"

ANCHOR RODS		8-1½"Φ		8-1½"Φ		6-1½"Φ		6-1½"Φ	6-1½"Φ	6-1½"Φ		6-1½"Φ		6-1½"Φ		4-1"Φ		6-1½"Φ		6-1½"Φ		6-1½"Φ	
ANCHOR EMBED		34"		34"		30"		30"	30"	30"		30"		30"		18"		30"		30"		30"	
BASE PLATE	t₂xBxC	2¼"x20"x1'-8"		2¼"x20"x1'-8"		2½"x21"x1'-9"		2½"x21"x1'-9"	2½"x21"x1'-9"	2¼"x20"x1'-8"		1½"x18"x1'-6"		1"x18"x1'-6"		1"x18"x1'-6"		1½"x18"x1'-6"		1½"x18"x1'-6"		1½"x18"x1'-6"	
	DETAIL	4/S7.4		4/S7.4		4/S7.4		4/S7.4	4/S7.4	4/S7.4		4/S7.4		4/S7.4		4/S7.4		4/S7.4		4/S7.4		4/S7.4	

13 BRACE FRAME LINE B
LABORATORY BUILDING
1/8"=1'-0"

ANCHOR RODS		6-1½"Φ		6-1½"Φ		6-1½"Φ		6-1½"Φ	6-1½"Φ	6-1½"Φ		6-1½"Φ		6-1½"Φ		6-1½"Φ		6-1½"Φ		6-1½"Φ		6-1½"Φ	
ANCHOR EMBED		30"		30"		30"		30"	30"	30"		30"		30"		30"		30"		30"		30"	
BASE PLATE	t₂xBxC	1¾"x18"x1'-6"		1⅞"x18"x1'-6"		2¼"x20"x1'-8"		2¼"x20"x1'-8"	1¾"x18"x1'-6"	2¼"x20"x1'-8"		1¾"x18"x1'-6"		1¾"x18"x1'-6"		1¾"x18"x1'-6"		1¾"x18"x1'-6"		1¾"x18"x1'-6"		1¾"x18"x1'-6"	
	DETAIL	4/S7.4		4/S7.4		4/S7.4		4/S7.4	4/S7.4	4/S7.4		4/S7.4		4/S7.4		4/S7.4		4/S7.4		4/S7.4		4/S7.4	

9 BRACE FRAME LINE D
LABORATORY BUILDING
1/8"=1'-0"

ANCHOR RODS		6-1½"Φ		6-1½"Φ		6-1½"Φ		6-1½"Φ	6-1½"Φ	6-1½"Φ		6-1½"Φ		6-1½"Φ		6-1½"Φ		6-1½"Φ		6-1½"Φ		6-1½"Φ	
ANCHOR EMBED		30"		30"		30"		30"	30"	30"		30"		30"		30"		30"		30"		30"	
BASE PLATE	t₂xBxC	1¾"x18"x1'-6"		1⅞"x18"x1'-6"		2¼"x20"x1'-8"		2¼"x20"x1'-8"	1¾"x18"x1'-6"	2¼"x20"x1'-8"		1¾"x18"x1'-6"		1¾"x18"x1'-6"		1¾"x18"x1'-6"		1¾"x18"x1'-6"		1¾"x18"x1'-6"		1¾"x18"x1'-6"	
	DETAIL	4/S7.4		4/S7.4		4/S7.4		4/S7.4	4/S7.4	4/S7.4		4/S7.4		4/S7.4		4/S7.4		4/S7.4		4/S7.4		4/S7.4	

5 BRACE FRAME LINE G.7
LABORATORY BUILDING
1/8"=1'-0"

18 BRACE FRAME LINE 11
LABORATORY BUILDING
1/8"=1'-0"

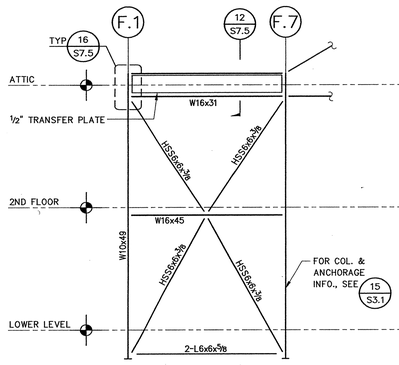

ANCHOR RODS		4-1⅛"Φ		4-1⅛"Φ		4-1⅛"Φ		4-1⅛"Φ	4-1⅛"Φ	4-1⅛"Φ		4-1⅛"Φ		4-1⅛"Φ		4-1⅛"Φ		4-1⅛"Φ		4-1⅛"Φ		4-1⅛"Φ	
ANCHOR EMBED		18"		18"		18"		18"	18"	18"		18"		18"		18"		18"		18"		18"	
BASE PLATE	t₂xBxC	1⅛"x18"x1'-6"		1⅛"x18"x1'-6"		1"x18"x1'-6"		1"x18"x1'-6"	1"x18"x1'-6"	1"x18"x1'-6"		1"x18"x1'-6"		1"x18"x1'-6"		1"x18"x1'-6"		1"x18"x1'-6"		1"x18"x1'-6"		1"x18"x1'-6"	
	DETAIL	4/S7.4		4/S7.4		4/S7.4		4/S7.4	4/S7.4	4/S7.4		4/S7.4		4/S7.4		4/S7.4		4/S7.4		4/S7.4		4/S7.4	

14 BRACE FRAME LINE 13
LABORATORY BUILDING
1/8"=1'-0"

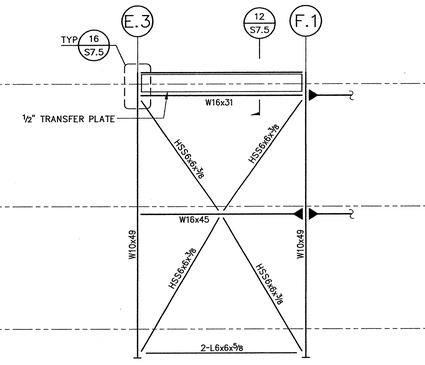

6 BRACE FRAME LINE 13.1
LABORATORY BUILDING
1/8"=1'-0"

19 BRACE FRAME LINE 2
LIBRARY BUILDING
1/8"=1'-0"

15 BRACE FRAME LINE 4
LIBRARY BUILDING
1/8"=1'-0"

tBP
architecture
planning
interiors
management

tBP/Architecture
1000 Burnett Ave, Suite 140
Concord, CA 94520
ph: 925.246.6419 fx: 925.246.6495

architect

DASSE DESIGN INC.
STRUCTURAL ENGINEERS
350 Frank H. Ogawa Plaza, Suite 600
Oakland, CA 94612-2033
415/788-4000 Fax: 415/788-4655

consultant

FILE NO. 7-01

IDENTIFICATION STAMP
DIV. OF THE STATE ARCHITECT
OFFICE OF REGULATION SERVICES
APPL NO. 01-115719
AC. ___ E.S. ___ S.S. ___
DATE

agency

SAN RAMON VALLEY CENTER

CONTRA COSTA COMMUNITY COLLEGE DISTRICT

SAN RAMON, CALIFORNIA

owner

tBP project number : 20212.00

file name:

drawn by: JOS checked by:

date: 03-04-04 plot scale: 1:1

Rev:	date:	description:

drawing title: BUILDING FRAME ELEVATIONS

building no.:

drawing no.: S3.2

drawing of

FILE: E:\02B163\Struct\02B163S32.dwg03/22/04 at 16:10
XREF: E:\02B163\Struct\02B163-T1.dwg

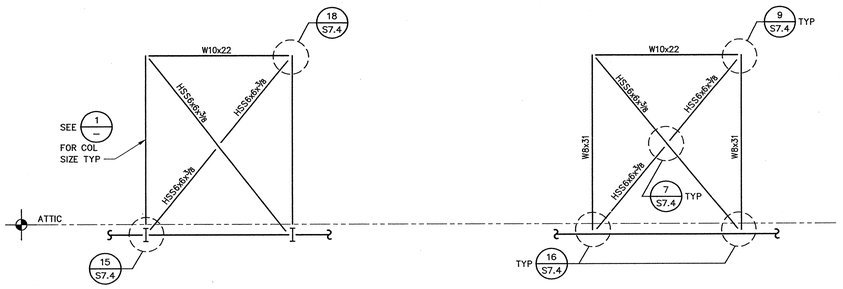

5 BRACE FRAME LINE D.1 & D.9 LAB BUILDING CLOCK TOWER 1/8"=1'-0"

1 BRACE FRAME LINE 10.1 & 10.9 LAB BUILDING CLOCK TOWER 1/8"=1'-0"

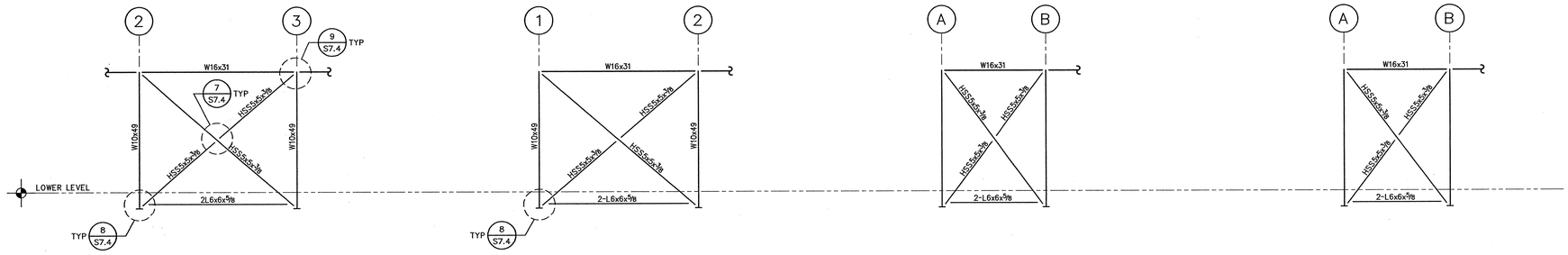

ANCHOR RODS		4-1"ø		4-1"ø		4-1"ø		4-1"ø		4-1"ø		4-1"ø		4-1"ø		4-1"ø		4-1"ø	
ANCHOR EMBED		18"		18"		18"		18"		18"		18"		18"		18"		18"	
BASE PLATE	t_BxBxC	3/4x16x1'-4"		3/4x16x1'-4"		3/4x16x1'-4"		3/4x16x1'-4"		3/4x16x1'-4"		3/4x16x1'-4"		3/4x16x1'-4"		3/4x16x1'-4"		3/4x16x1'-4"	
	DETAIL	4/S7.4		4/S7.4		4/S7.4		4/S7.4		4/S7.4		4/S7.4		4/S7.4		4/S7.4		4/S7.4	

14 BRACE FRAME LINE A CENTRAL PLANT 1/8"=1'-0"

10 BRACE FRAME LINE D CENTRAL PLANT 1/8"=1'-0"

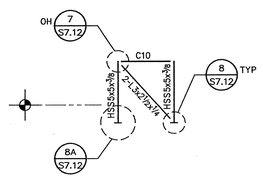

NOTE: SEE 8 S7.12 FOR BASE PLATE INFO

6 BRACE FRAME LINE 1 CENTRAL PLANT 1/8"=1'-0"

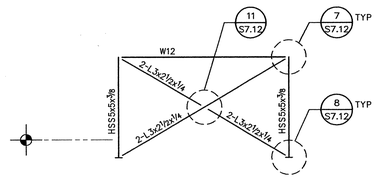

NOTE: SEE 8 S7.12 FOR BASE PLATE INFO

2 BRACE FRAME LINE 4 CENTRAL PLANT 1/8"=1'-0"

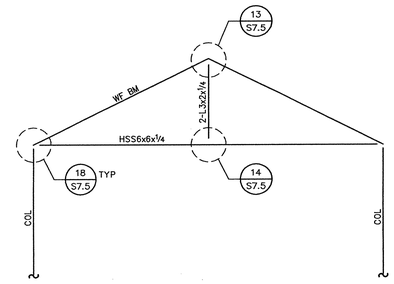

11 STAIR LANDING BRACE 1/8"=1'-0"

7 LABORATORY CANOPY 1/8"=1'-0"

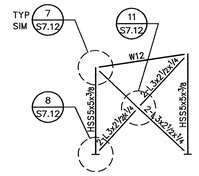

NOTE: SEE 8 S7.12 FOR BASE PLATE INFO

3 ROOF FRAME AT LINES 2 & 3 CENTRAL PLANT 1/8"=1'-0"

8 LABORATORY CANOPY 1/8"=1'-0"

tBP
architecture
planning
interiors
management
tBP/Architecture
1000 Burnett Ave, Suite 140
Concord, CA 94520
ph: 925.246.6419 fx: 925.246.6495
architect
DASSE DESIGN INC. STRUCTURAL ENGINEERS
consultant

FILE NO. 7-43
DIV. OF THE STATE ARCHITECT
OFFICE OF REGULATION SERVICES
APPL NO. 01-105719
AC. FLS SS
DATE

agency

SAN RAMON VALLEY CENTER
CONTRA COSTA COMMUNITY COLLEGE DISTRICT
SAN RAMON, CALIFORNIA

owner

tBP project number : 20212.00
file name:
drawn by: JDS checked by:
date: 03-09-04 plot scale: 1:1

Rev:	date:	description:

drawing title: BUILDING FRAME ELEVATIONS
building no.:
drawing no.: S3.3
drawing of

FILE: E:\02B163\S+ruct\02B163S3.dwg03/19/04 at 14:58
XREF: E:\02B163\S+ruct\02b163-TB.dwg

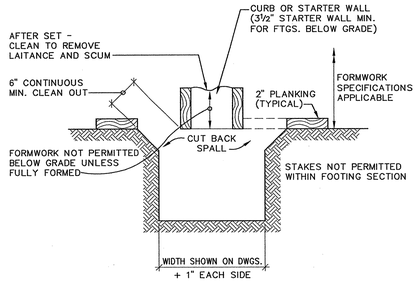

17 MANDATORY MINIMUM FORMWORK

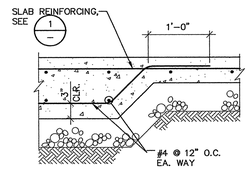

13 THICKENED SLAB-ON-GRADE

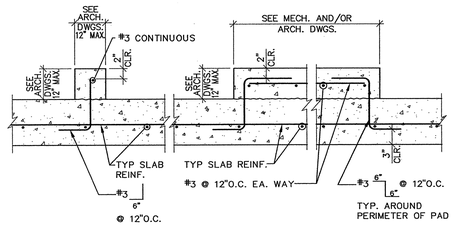

9 TYPICAL CURB AND RAISED PAD DETAILS

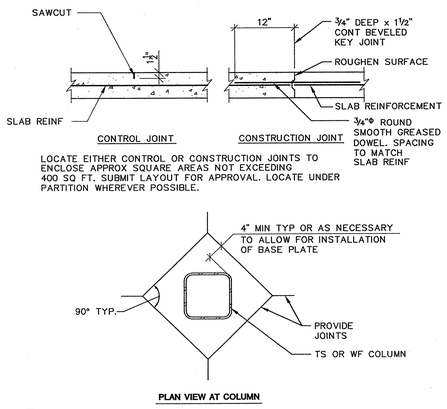

5 SLAB-ON-GRADE CONSTRUCTION AND CONTROL JOINTS

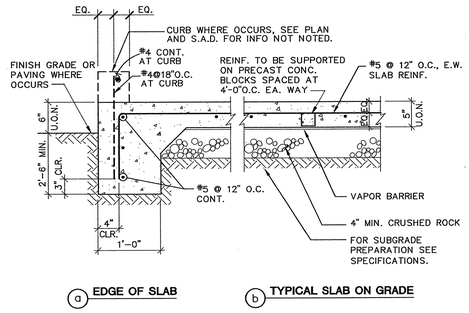

1 SLAB-ON-GRADE DETAILS

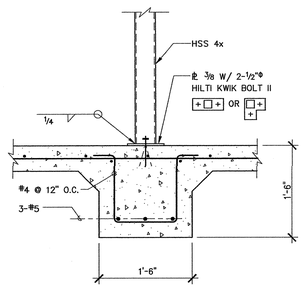

18 DETAIL

1"=1'-0"

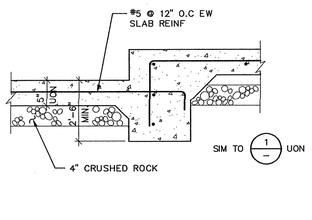

14

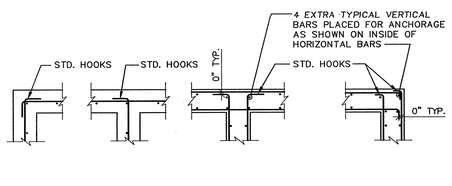

10 CONCRETE WALL AND FOOTING INTERSECTIONS

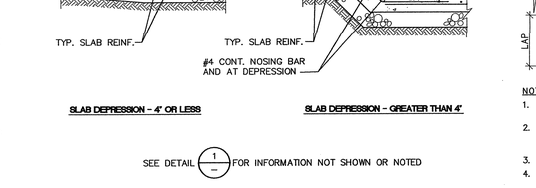

6 SLAB-ON-GRADE DEPRESSION

CONCRETE STRENGTH	F'c = 3000 PSI				F'c = 4000 PSI			
CLASS OF LAP SPLICE	CLASS "A"		CLASS "B"		CLASS "A"		CLASS "B"	
BAR SIZE \ CASE	TOP BARS	OTHER BARS	TOP BARS	OTHER BARS	TOP BARS	OTHER BARS	TOP BARS	OTHER BARS
#3	1'-10"	1'-5"	2'-4"	1'-10"	1'-7"	1'-3"	2'-0"	1'-7"
#4	2'-5"	1'-10"	3'-1"	2'-5"	2'-1"	1'-7"	2'-8"	2'-1"
#5	3'-0"	2'-4"	3'-11"	3'-0"	2'-7"	2'-0"	3'-4"	2'-7"
#6	3'-7"	2'-9"	4'-8"	3'-7"	3'-1"	2'-5"	4'-0"	3'-1"
#7	5'-3"	4'-0"	6'-9"	5'-2"	4'-8"	3'-6"	5'-11"	4'-6"
#8	6'-0"	4'-7"	7'-9"	5'-11"	5'-2"	4'-0"	6'-9"	5'-2"
#9	6'-9"	5'-2"	8'-9"	6'-9"	5'-10"	4'-6"	7'-7"	5'-10"

NOTES:
1. UNLESS INDICATED OTHERWISE, USE THE CLASS "B" LAP SPLICE LENGTHS, MULTIPLIED BY THE APPLICABLE FACTOR(S) LISTED BELOW.
2. WHERE CLEAR SPACE BETWEEN BARS LAP SPLICED AT ANY SECTION IS LESS THAN 2 BAR DIAMETERS, OR WHERE THE BAR COVER IS LESS THAN OR EQUAL TO THE BAR DIAMETER, INCREASE THE LAP LENGTH BY 50%
3. A CLASS "A" SPLICE MAY BE USED ONLY WHERE NOTED ON THE DRAWINGS.
4. WHERE LIGHTWEIGHT AGGREGATE CONCRETE IS USED, INCREASE LAP SPLICE LENGTH BY 30%
5. TOP BARS ARE HORIZONTAL BARS WITH MORE THAN 12 INCHES OF CONCRETE CAST BELOW THE BARS.
6. SPLICES OF HORIZONTAL REINFORCEMENT IN WALLS SHALL BE STAGGERED.
7. SPLICES IN WALLS CONTAINING TWO CURTAINS OF REINFORCEMENT SHALL NOT OCCUR IN BOTH CURTAINS AT SAME LOCATION.

2 REBAR OFFSET AND LAP SPLICE

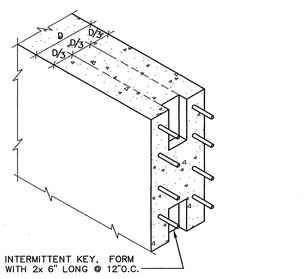

NOTE:
EXTEND WALL TO COVER WALL REINF

19

1/2"=1'-0"

NOTES:
1. SEE REBAR LAP SPLICES AND INDIVIDUAL DETAILS FOR INFORMATION NOT NOTED.
2. SEE SPECIFICATIONS FOR JOINT ROUGHENING REQUIREMENTS.

15 VERTICAL CONSTRUCTION JOINT

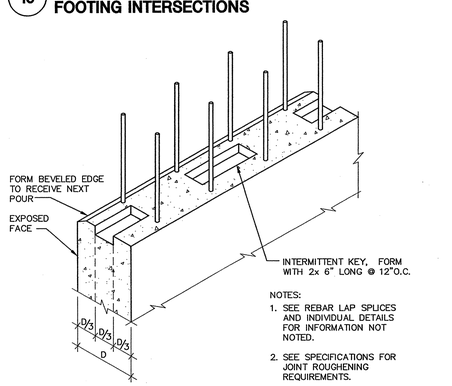

NOTES:
1. SEE REBAR LAP SPLICES AND INDIVIDUAL DETAILS FOR INFORMATION NOT NOTED.
2. SEE SPECIFICATIONS FOR JOINT ROUGHENING REQUIREMENTS.

11 HORIZONTAL CONSTRUCTION JOINT

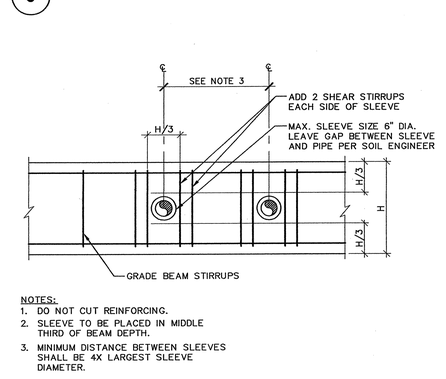

NOTES:
1. DO NOT CUT REINFORCING.
2. SLEEVE TO BE PLACED IN MIDDLE THIRD OF BEAM DEPTH.
3. MINIMUM DISTANCE BETWEEN SLEEVES SHALL BE 4X LARGEST SLEEVE DIAMETER.

7 SLEEVE THRU GRADE BEAM

DIAMETER OF BENDS	
D1	1 1/2" FOR #3 BARS 2" FOR #4 BARS 2 1/2" FOR #5 BARS
D2	6d FOR #3 THRU #8 BARS 8d FOR #9, #10 & #11 BARS

"D1" - FOR STIRRUPS, TIES AND WALL REINF. AT OPENINGS
"D2" - FOR ALL OTHERS
d - NOMINAL BAR DIAMETER

"D1" or "D2"
HK. LENGTH 12d
90° BEND-MAIN
"D1" or "D2"
HK. LENGTH 4d OR 2½" MIN.
180° BEND-MAIN
"D1"
HK. LENGTH 6d OR 3" MIN.
135° BEND-TIES
"D1" or "D2"
#3 THRU #5-6d OR 3" MIN.
#6 THRU #8-12d
90° BEND-TIES

STANDARD HOOK LENGTHS				
BAR SIZE	MAIN REINF.		STIRRUP & TIE HOOKS	
	90°	180°	90°	135°
#3	4½"	2½"	3"	3"
#4	6"	2½"	3"	3"
#5	7½"	2½"	3¾"	3¾"
#6	9"	3"	9"	4½"
#7	10½"	3½"	10½"	5¼"
#8	12"	4"	12"	6"
#9	13½"	4½"	—	—
#10	15"	5"	—	—
#11	16½"	5½"	—	—

3 STANDARD HOOKS

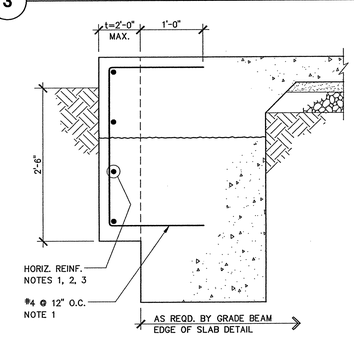

NOTES
1. IF t < 4" NO REINFORCEMENT NEEDED.
2. IF 8" ≥ t ≥ 4", #4 @ 12" O.C.
3. IF t > 8", #5 @ 12" O.C.

4 EDGE OF SLAB

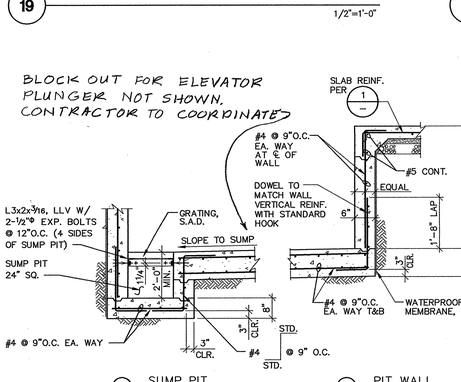

20 TYPICAL ELEVATOR PIT DETAILS

1/2"=1'-0"

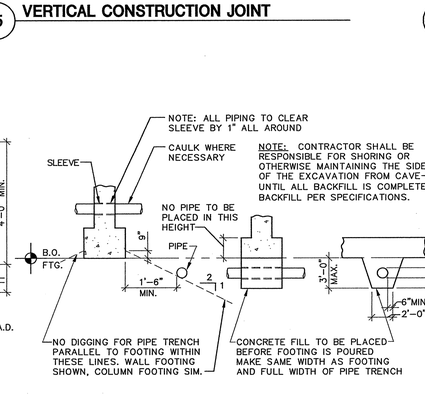

16 PIPE CLEARANCES AT FOOTINGS

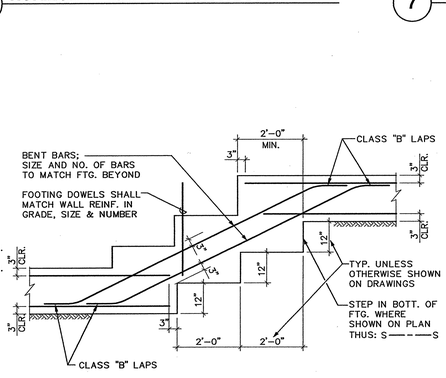

12 STEPS IN CONTINUOUS FOOTING

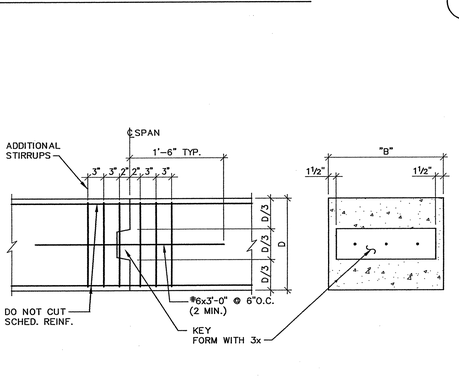

8 BEAMS AND GRADE BEAMS CONSTRUCTION JOINTS

tBP Architecture
1000 Burnett Ave, Suite 140
Concord, CA 94520
ph: 925.246.6419 fx: 925.246.6495

architect

DASSE DESIGN INC.
STRUCTURAL ENGINEERS
33 New Montgomery St., Suite 850
San Francisco, CA 94105
415/243-0400 • Fax 415/243-9995

consultant

FILE NO. 7-C1
IDENTIFICATION STAMP
OFFICE OF THE STATE ARCHITECT
APPL. NO. 01-110178
AC — ITG — SS
DATE

agency

SAN RAMON VALLEY CENTER
CONTRA COSTA COMMUNITY COLLEGE DISTRICT
SAN RAMON, CALIFORNIA

owner

tBP project number : 20212.00
file name:
drawn by: BH checked by:
date: 03-09-04 plot scale: 1:1

Rev:	date:	description:

drawing title: CONCRETE TYPICAL DETAILS
building no:

drawing no: S5.1
drawing of

FILE: E:\02B163\Struct\02b163S51.dwg 03/19/04 at 15:17
XREF: E:\02B163\Struct\02b163-T1.dwg

100

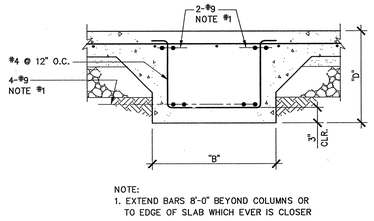

NOTE:
1. EXTEND BARS 8'-0" BEYOND COLUMNS OR TO EDGE OF SLAB WHICH EVER IS CLOSER

17 DETAIL

3/4"=1'-0"

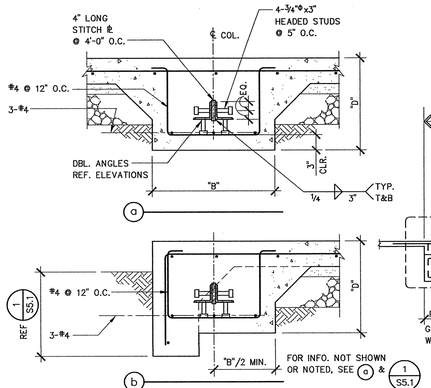

FOR INFO. NOT SHOWN OR NOTED, SEE (a) & (1/S5.1)

13 DETAIL

3/4"=1'-0"

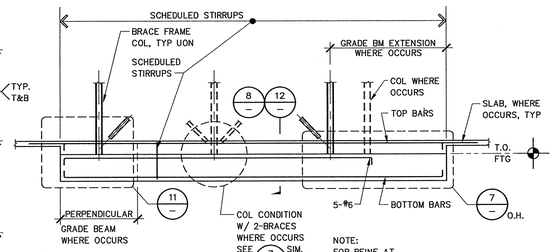

NOTE:
FOR REINF AT INTERSECTING GRADE BEAM CONDITION, SEE (15)

9 GRADE BEAM ELEVATION

1/8"=1'-0"

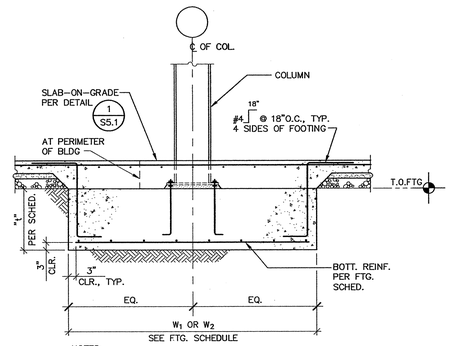

NOTES:
1. PROVIDE 6" MIN. CONCRETE COVER OVER COLUMN, BASE ℄ AND A.B.'S BELOW GRADE, TYP.
2. SEE 2&6 / S5.3 AT MOMENT FRAME FOOTING.

5 COLUMN FOOTING DETAIL

1/2"=1'-0"

FOOTING SCHEDULE			
MARK	SIZE W_1 OR W_2 x t (1)	REINFORCING (2)	REF. DETAIL
F1	8'-0"x8'-0"x2'-6"	6-#8 E.W.	5/–
F2	9'-0"x9'-0"x2'-6"	10-#7 E.W.	5/–
F3	10'-0"x10'-0"x3'-0"	9-#8 E.W.	5/–
F4	10'-6"x10'-6"x3'-0"	10-#8 E.W.	5/–
F5	11'-0"x11'-0"x3'-0"	11-#8 E.W.	5/–
F6	11'-6"x11'-6"x3'-0"	12-#8 E.W.	5/–
F7	12'-0"x12'-0"x3'-3"	10-#9 E.W.	5/–
F8	6'-6"x6'-6"x2'-6"	5-#7 E.W.	5/–
F9	6'-0"x6'-0"x2'-0"	6-#6 E.W.	5/–
F10	5'-0"x5'-0"x2'-0"	6-#5 E.W.	5/–
F11	3'-6"x3'-6"x2'-0"	4-#5 E.W.	5/–
F12	5'-6"x5'-6"x2'-0"	7-#5 E.W.	5/–
F13	13'-0"x13'-0"x3'-6"	12-#9 E.W.	5/–
F14	4'-0"x4'-0"x2'-0"	7-#4 E.W.	5/–
F14B	4'-6"x4'-6"x2'-0"	8-#4 E.W.	5/–
F15	7'-0"x7'-0"x2'-6"	6-#7 E.W	5/–
F16	9'-6"x9'-6"x3'-0"	11-#7 E.W.	5/–
F17	6'-3"x5'-0"x2'-0"	6-#5 SHORT 8-#5 LONG	5/–
F18	4'-6"x2'-0"x2'-0"	7-#4 LONG 3-#4 SHORT	5/–
F19	3'-6"x2'-0"x2'-0"	5-#4 LONG 3-#4 SHORT	5/–
F20	2'-6"x2'-6"x2'-0"	5-#6 E.W.	5/–

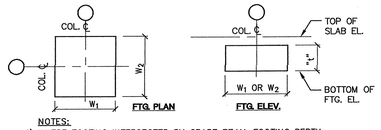

NOTES:
1) WHERE FOOTING INTERSECTED BY GRADE BEAM, FOOTING DEPTH SHALL BE GREATER OF "t" AND SPECIFIED DEPTH OF GRADE BEAM.
2) AT BRACE FRAME COLUMN FOOTINGS, TOP BARS TO MATCH SCHEDULED BOTTOM BAR SIZE AND SPACING. SEE (16)

1 FOOTING SCHEDULE

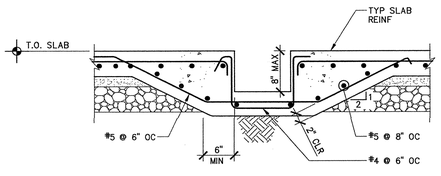

18 DETAIL

3/4"=1'-0"

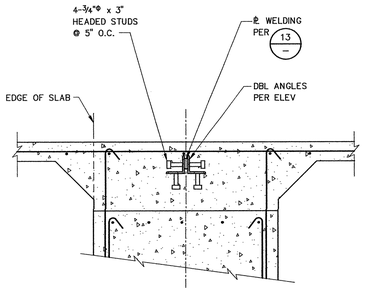

14 DETAIL

3/4"=1'-0"

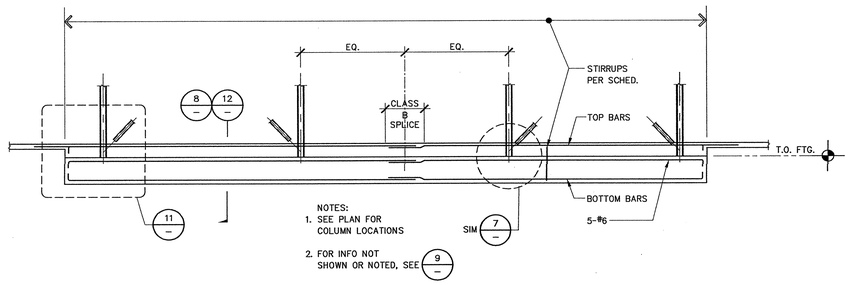

NOTES:
1. SEE PLAN FOR COLUMN LOCATIONS
2. FOR INFO NOT SHOWN OR NOTED, SEE (9)

10 GRADE BEAM ELEVATION

1/8"=1'-0"

1 FOOTING SCHEDULE

GRADE BEAM SCHEDULE						
GRADE BEAM	WIDTH "B"	DEPTH "D"	TOP BARS	BOT. BARS	STIRRUPS	REF. DETAIL
GB-1	3'-0"	4'-0"	8-#9	8-#9	#4 @ 9"O.C.	1/S5.3
GB-2	2'-0"	1'-6"	–	–	–	16/–
GB-2A	3'-0"	1'-6"	–	–	–	17/–
GB-3	4'-0"	3'-6"	9-#9	9-#9	#4 @ 16"O.C.	9/–
GB-5	3'-8"	3'-0"	6-#7	6-#7	#4 @ 16"O.C.	10/–
GB-7	5'-0"	4'-6"	6-#10	13-#11	#4 @ 16"O.C.	9/–
GB-8	4'-0"	3'-6"	5-#7	5-#7	#4 @ 16"O.C.	10/–
GB-9	5'-0"	4'-6"	10-#7	10-#7	#4 @ 16"O.C.	9/–
GB-10	6'-0"	3'-6"	11-#8	11-#8	#4 @ 16"O.C.	9/–

NOTES:
1. FORM KEY AT TOP OF GRADE BEAM. SEE (11/S5.1)
2. WHERE GRADE BEAMS INTERSECT COMBINED FOOTINGS, EXTEND LONGITUDINAL REINF. THRU COMBINED FOOTING. SEE (15)
3. WHERE GRADE BEAMS TERMINATE AT INTERIOR SPREAD EXTEND LONGITUDINAL GRADE BEAM REINF. 6'-0" MIN. INTO PERPENDICULAR GRADE BEAMS.
4. PIPE SLEEVES SHALL BE PROVIDED PER (7/S5.1) SLEEVES SHALL NOT BE LOCATED AT SAME SPAN AS LONGITUDINAL SPLICE.

3 GRADE BEAM SCHEDULE

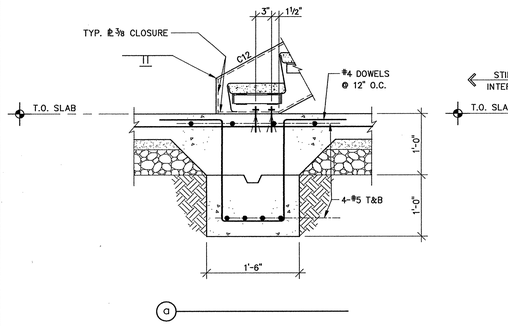

20 FOOTING AT STAIR

1"=1'-0"

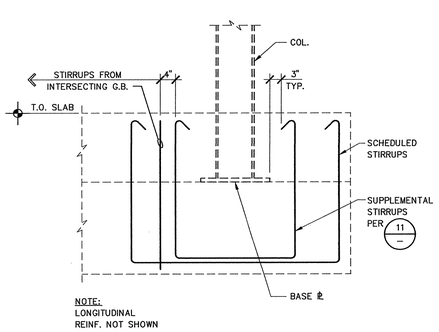

NOTE:
LONGITUDINAL REINF. NOT SHOWN FOR CLARITY.

15 STIRRUPS AT GRADE BEAM INTERSECTION

3/4"=1'-0"

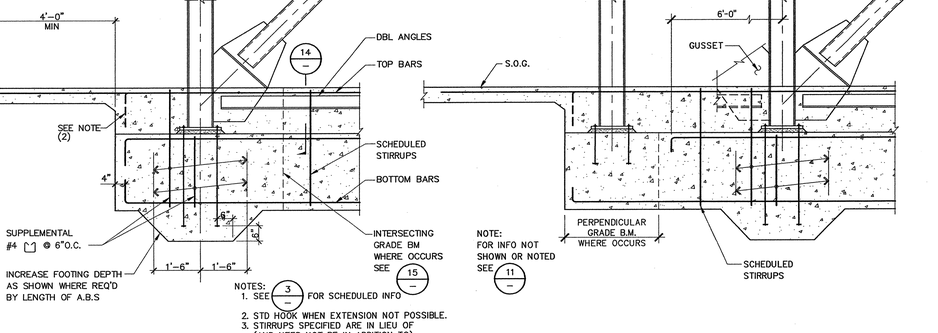

NOTES:
1. SEE (3) FOR SCHEDULED INFO
2. STD HOOK WHEN EXTENSION NOT POSSIBLE.
3. STIRRUPS SPECIFIED ARE IN LIEU OF (AND NEED NOT BE IN ADDITION TO) SCHEDULED TIES.

11 GRADE BEAM ELEVATION

1/2"=1'-0"

NOTE:
FOR INFO NOT SHOWN OR NOTED SEE (11)

7 GRADE BEAM

1/2"=1'-0"

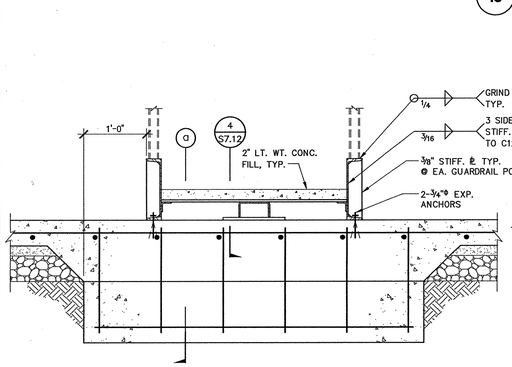

20 FOOTING AT STAIR

1"=1'-0"

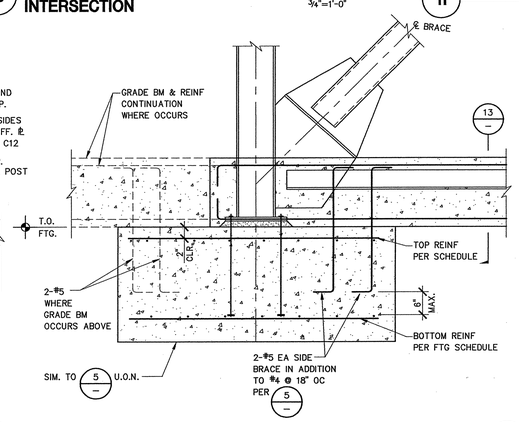

16 BRACE FRAME COLUMN FOOTING DETAIL

3/4"=1'-0"

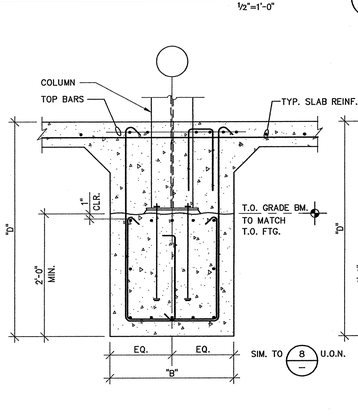

12 GRADE BEAM SECTION

1"=1'-0"

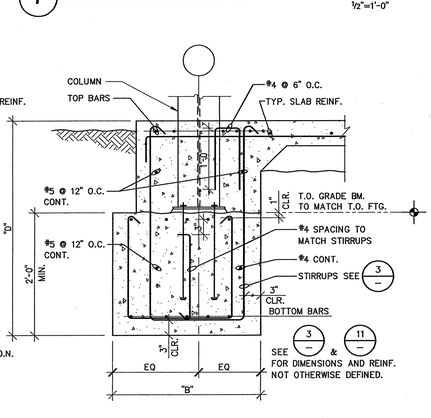

8 PERIMETER GRADE BEAM SECTION

1"=1'-0"

tBP
architecture
planning
interiors
management

tBP/Architecture
1000 Burnett Ave, Suite 140
Concord, CA 94520
ph: 925.246.6419 fx: 925.246.6495

architect

DASSE DESIGN INC.
STRUCTURAL ENGINEERS
2320 Marinship Way, Suite 300
Sausalito, CA 94965
415.289.0700 FAX 415.289.0705

consultant

FILE NO. 7-01
DIV. OF THE STATE ARCHITECT
OFFICE OF REGULATION SERVICES
APPL. NO. 01-103719
AC CLS DSA
DATE

agency

SAN RAMON VALLEY CENTER
CONTRA COSTA COMMUNITY COLLEGE DISTRICT
SAN RAMON, CALIFORNIA

owner

tBP project number : 2021.00
file name:
drawn by: BH checked by:
date: 03-09-04 plot scale: 1:1

Rev.	date:	description:

drawing title: CONCRETE DETAILS
building no:

drawing no: S5.2
drawing of

FILE: E:\02BK63\Structural\02bk63S52.dwg 03/15/04 at 15:56
XREF: E:\02BK63\Structural\02bk63-TB.dwg

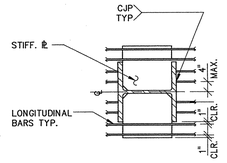

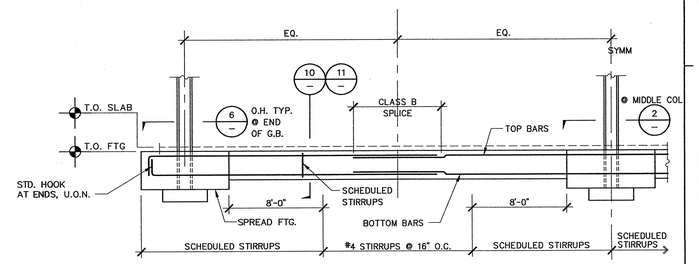

1 GRADE BEAM ELEVATION

N.T.S.

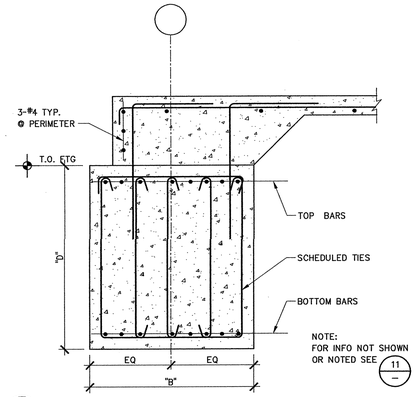

10 SECTION

3/4"=1'-0"

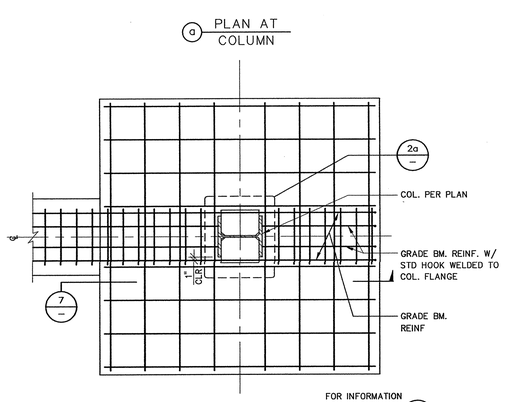

6 PLAN AT SMRF FOOTING

1/2"=1'-0"

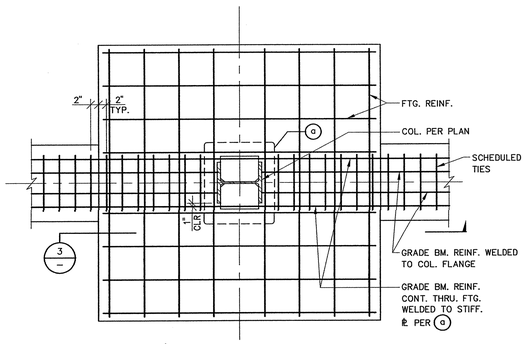

2 PLAN AT SMRF FOOTING

1/2"=1'-0"

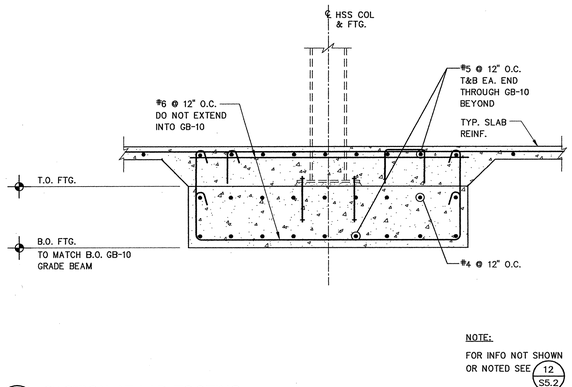

14 SECTION AT LAB FOOTING

1/2"=1'-0"

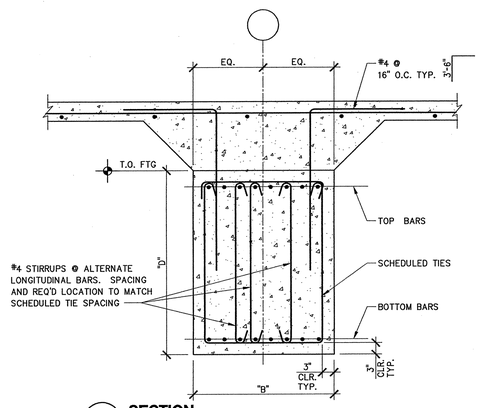

11 SECTION

3/4"=1'-0"

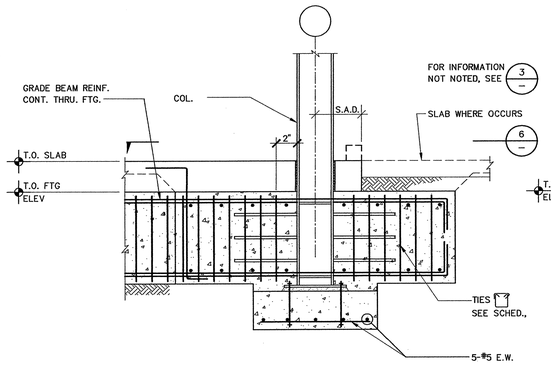

7 GRADE BEAM AT END SMRF FOOTING

1/2"=1'-0"

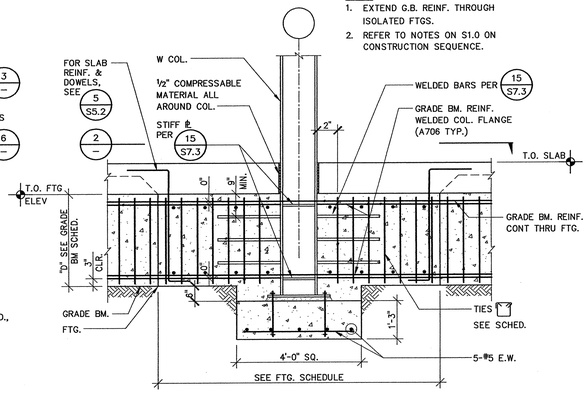

3 GRADE BEAM AT SMRF FOOTING

1/2"=1'-0"

tBP/Architecture
1000 Burnett Ave, Suite 140
Concord, CA 94520
ph: 925.246.6419 fx: 925.246.6495

architecture
planning
interiors
management

architect

DASSE DESIGN INC.
STRUCTURAL ENGINEERS
33 Mt. Diablo Boulevard, Suite A
San Ramon, CA 94583
415.258.8000 925.866.0322 fax

consultant

FILE NO. 7-01
DIV. OF STATE ARCHITECT
OFFICE OF REGULATION SERVICES
APPL NO. 01-105719
AC. ES
DATE

agency

SAN RAMON VALLEY CENTER

CONTRA COSTA COMMUNITY COLLEGE DISTRICT

SAN RAMON, CALIFORNIA

owner

tBP project number: 2021.00
file name:
drawn by: checked by:
date: 03-04-04 plot scale: 1:1

Rev:	date:	description:

drawing title: CONCRETE DETAILS
building no:

drawing no: S5.3
drawing of

FILE: E:\02Bld63\Struct\02Bld6353dwg03/19/04 at 11:52
XREF: E:\02Bld63\Struct\02Bld65-18.dwg

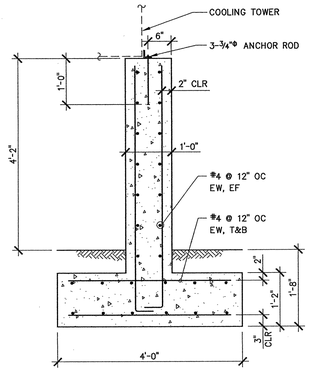

9 DETAIL

3/4"=1'-0"

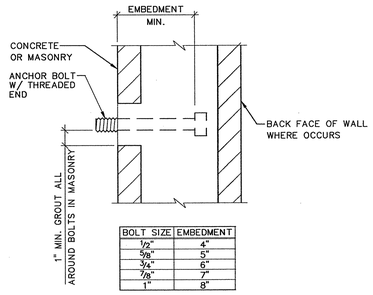

BOLT SIZE	EMBEDMENT
½"	4"
⅝"	5"
¾"	6"
⅞"	7"
1"	8"

NOTES:

1. MINIMUM BOLT SPACING SHALL BE 12 BOLT DIAMETERS WITH A MINIMUM EDGE DISTANCE OF 6 DIAMETERS AND WITH A MINIMUM OF 6" TO END OF WALL.
2. USE ONLY HEADED BOLTS.

5 BOLT EMBEDMENT SCHEDULE

N.T.S.

1. ALL BARS TO HAVE MINIMUM LAP OR DEVELOPMENT LENGTH OF 52 BAR DIAMETERS.
2. FOR STANDARD HOOKS SEE DETAIL 3/S5.1.
3. PROVIDE DOWELS WITH STANDARD HOOKS INTO FOUNDATION TO MATCH ALL VERTICAL REINFORCEMENT.
4. ALL BOLTS TO BE PLACED PER DETAIL 5.
5. STAGGER REINF SPLICE LOCATIONS.
6. REFERENCE 7/— WHEN LAYING OUT CMU UNITS.

1 CONCRETE MASONRY NOTES

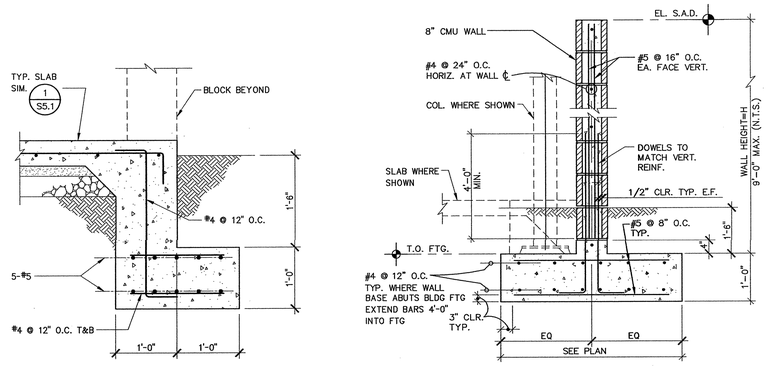

10

1"=1'-0"

6 FREE STANDING 8" CMU SCREEN WALL

3/4"=1'-0"

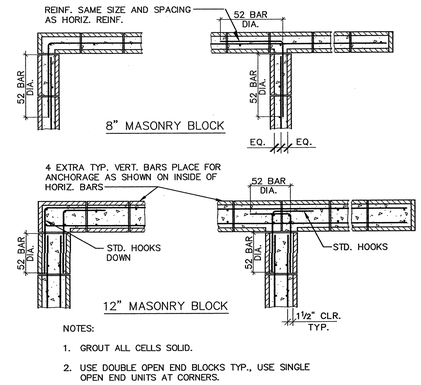

NOTES:

1. GROUT ALL CELLS SOLID.
2. USE DOUBLE OPEN END BLOCKS TYP., USE SINGLE OPEN END UNITS AT CORNERS.

2 CMU WALL INTERSECTIONS

1/2"=1'-0"

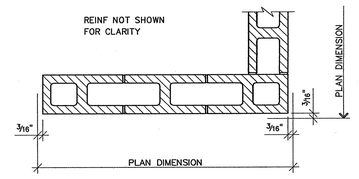

7 SECTION

1"=1'-0"

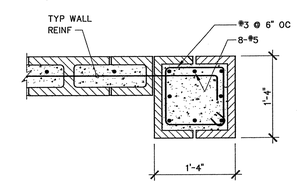

3 SECTION

1"=1'-0"

tBP
architecture
planning
interiors
management
LICENSED ARCHITECT RENEE MARIANI, AIA NO. C-4869 STATE OF CALIFORNIA
tBP/Architecture
1000 Burnett Ave, Suite 140
Concord, CA 94520
ph: 925.246.6419 fx: 925.246.6495
architect
DASSE DESIGN INC. STRUCTURAL ENGINEERS
33 New Montgomery St., Ste. 850
San Francisco, CA 94105
415/243-8400 • Fax: 415/243-8985
PROFESSIONAL ENGINEER ROBERT R. SUTTON C 045145 STRUCTURAL CALIFORNIA
consultant

FILE NO. 7-01
IDENTIFICATION STAMP
OFFICE OF THE STATE ARCHITECT
APPROVED BY DSA
APPL. NO. 01-105178
AC. TCS
DATE
agency

SAN RAMON VALLEY CENTER
CONTRA COSTA COMMUNITY COLLEGE DISTRICT
SAN RAMON, CALIFORNIA
owner

tBP project number : 20212.00
file name:
drawn by: BH checked by:
date: 03-09-04 plot scale: 1:1

Rev:	date:	description:

drawing title: MASONRY TYPICAL DETAILS
building no.:
drawing no.: S6.1
drawing of

FILE: E:\02BK63\Structural\02bk63s61.dwg 03/15/04 at 16:00
XREF: E:\02BK63\Structural\02bk63-TB.dwg

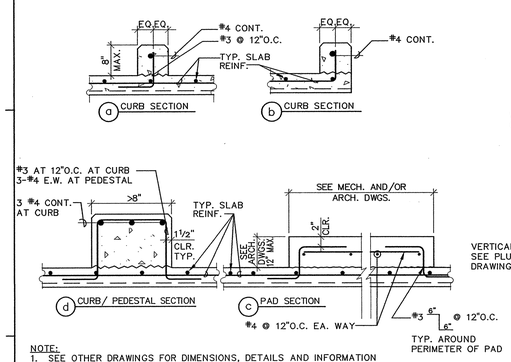

NOTE:
1. SEE OTHER DRAWINGS FOR DIMENSIONS, DETAILS AND INFORMATION NOT SHOWN OR NOTED.
2. PEDESTAL AND CURB CONC TO MATCH DECK CONC TYPE.

17 CONCRETE CURBS AT STEEL DECK

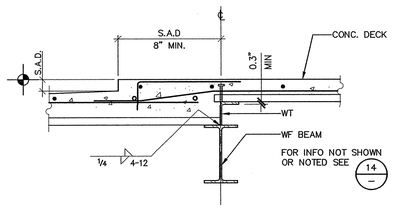

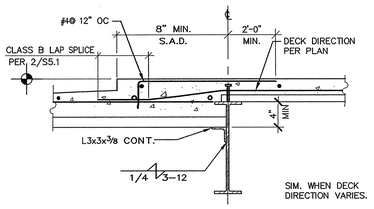

13 STEEL DECK SUPPORT AT COLUMN

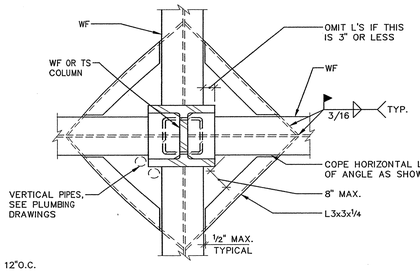

9 STEEL DECK SUPPORT AT EXTERIOR WALL COLUMN

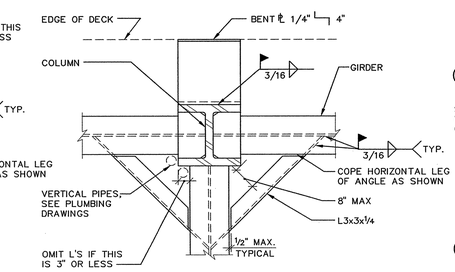

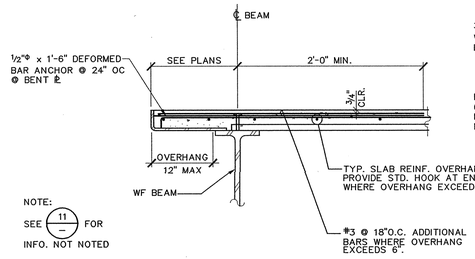

NOTE:
SEE 11 FOR INFO. NOT NOTED

5 TYPICAL DECK WELDING DETAILS

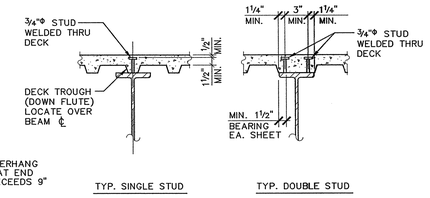

NOTES:
1. SPLIT DECK LONGITUDINALLY WHERE REQ'D. TO ENLARGE TROUGH.
2. PROVIDE DOUBLE STUDS WHERE SINGLE STUD SPACING WOULD BE LESS THAN 4½" O.C.

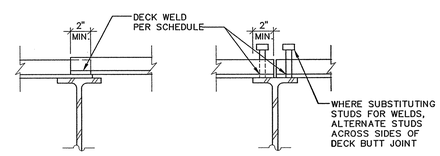

NOTES:
1. SEE STEEL DECK NOTES AND DECK SCHEDULE FOR COMPLETE INFORMATION.

1. SEE GENERAL NOTES ON S1.0 FOR MATERIAL SPECIFICATIONS. SEE S7.11 FOR ADDITIONAL TYPICAL DETAILS.
2. STRUCTURAL PROPERTIES OF STEEL DECK SYSTEM SHALL EQUAL OR EXCEED THE PROPERTIES LISTED IN DETAIL 3 ON THIS SHEET.
3. DECKING SHALL BE CONTINUOUS OVER 3 OR MORE SUPPORTS WHEREVER POSSIBLE. PROVIDE SHORING AS REQUIRED PER MANUFACTURER'S RECOMMENDATIONS. SPLICES SHALL BE LOCATED OVER SUPPORTS.
4. PROVIDE BENT ℄ CLOSURE PIECES AT ALL INTERIOR AND EXTERIOR EDGES OF DECK U.O.N.. SEE DETAILS 10 AND 11 ON THIS SHEET.
5. OPENINGS THROUGH DECKING SHOWN ON FRAMING PLANS ARE NOT COMPLETE AS TO NUMBER, SIZE AND LOCATION. FOR COMPLETE INFORMATION REFER TO DRAWINGS OTHER THAN STRUCTURAL.
6. USE STRENGTHENING AT OPENINGS AS SHOWN IN DETAILS 4, 8, OR 12 ON THIS SHEET UNLESS OTHERWISE NOTED. PROVIDE STRENGTHENING BEFORE CUTTING OPENING.
7. DETAILS SHOWN ARE FOR TYPICAL REINFORCING OF DECKS AT OPENINGS. FOR SPECIAL CONDITIONS, SUBMIT LAYOUT OF OPENINGS AND PROPOSED REINFORCING OF DECK FOR REVIEW.
8. MULTIPLE OPENINGS WITH A CLEAR DISTANCE LESS THAN THREE TIMES THE SIZE OF THE LARGER OPENING TO BE TREATED AS A SINGLE GROUP OPENING.
9. IF OPENING IS CUT PRIOR TO FILL PLACEMENT, PROVIDE CLOSURE PIECES AND SHORING AS REQUIRED.
10. FOR OPENINGS THROUGH DECK THAT CUT ONLY ONE WEB AND ARE 5" SQUARE OR 5" DIAMETER MAXIMUM, NO STRENGTHENING IS REQUIRED.
11. SEE MECHANICAL / PLUMBING DRAWINGS FOR DETAILS OF UTILITIES SUSPENDED FROM THE CONCRETE AND STEEL DECK SYSTEM. POINT LOADS TO THE DECK FROM THESE DETAILS SHALL NOT EXCEED 100 POUNDS.
12. DO NOT PLACE CONDUITS OR OTHER PIPES IN CONCRETE FILL OVER DECK.
13. SHEAR STUDS WELDED THROUGH THE DECK, WITH A MINIMUM CLEARANCE OF 1" FROM THE EDGE OF THE DECK TO THE STUD CENTER LINE, MAY BE SUBSTITUTED ONE FOR ONE FOR A DECK WELD.
14. ALL WELDED STUDS SHALL BE 3/4" DIAMETER. STUD LENGTHS SHALL BE PER DETAIL 6 ON THIS SHEET.
15. TYPICAL SHEAR STUD SPACING IS SHOWN IN DETAIL 7 ON THIS SHEET. WHERE ONE NUMBER OF STUDS DESIGNATION IS GIVEN, SPACE SHEAR STUDS EQUALLY ALONG BEAM AS SHOWN. WHERE MULTIPLE NUMBER OF STUDS DESIGNATIONS ARE GIVEN, ONE DESIGNATION IS PROVIDED FOR EACH SEGMENT. SPACE SHEAR STUDS EQUALLY THROUGH SEGMENT.
16. ALL BEAMS AND GIRDERS WHICH ARE COVERED BY STEEL DECK AND CONCRETE FILL, SHALL HAVE SHEAR STUDS WITH A MAXIMUM SPACING OF 24" ON CENTER UNLESS OTHERWISE NOTED.
17. SEE DETAILS 9 & 13 ON THIS SHEET FOR TYPICAL DECK SUPPORT AT COLUMNS.
18. SEE DETAIL 7/S7.2 FOR TYPICAL CONSTRUCTION JOINT IN CONCRETE.
19. THE FIRST SHEET OF STEEL DECKING ADJACENT & PARALLEL TO PERIMETER WF BMS & WF BMS WITH MOMENT CONNECTIONS AT EACH END, SHALL BE A FULL WIDTH SHEET. (IR22-1)

2 STEEL DECKING & SHEAR STUD NOTES

TYPE	DECK TYPE & GAUGE	tDECK	tCONC.	STEEL DECK ONLY			WELD ATTACHMENT(3)			TYP. SLAB REINF.
				I(in⁴)	+S(in³)	-S(in³)	AT SUPPORT MEMBERS	AT PARALLEL MEMBERS	AT SIDE LAPS	
1	VERCO W3x-36 16GA.	3"	3¼" LT WT	1.509	.960	.960	4-½"Φ PUDDLE WELDS/SHEET	½" PUDDLE WELD @ 12" O.C.	½" TOP SEAM WELD @ 12" O.C.	#4@12" O.C. E.W.
2	VERCO W3-36 16GA.	3"	3¼" NORMAL WT.	1.509	.960	.960	4-½"Φ PUDDLE WELDS/SHEET	½" PUDDLE WELD @ 12" O.C.	½" TOP SEAM WELD @ 12" O.C.	#4@12" O.C. E.W.
3	VERCO N-24, 16GA.	3"	-	.377	.411	.417	4-½"Φ PUDDLE WELDS/SHEET	½" PUDDLE WELD @ 12" O.C.	½" TOP SEAM WELD @ 12" O.C.	-
4	VERCO W3-36 16GA.	3"	3" NORMAL WT.	1.509	.960	.960	4-½"Φ PUDDLE WELDS/SHEET	½" PUDDLE WELD @ 12" O.C.	½" TOP SEAM WELD @ 12" O.C.	#4@12" O.C. E.W.
5	IMSA REVERSE BOX-RIB 18 GA	1½"	-	0.21	0.259	0.2507	#12 SCREWS @ EA FLUTE	#12 SCREWS @ 12" OC	#12 SCREWS @ 12" OC	-

NOTE:
1. TYPICAL DECK DESIGNATIONS ARE AS PER VERCO MANUFACTURING CO. ICBO REPORT 2078P.
2. PROVIDE VENTED DECK WHERE CONC FILL.
3. PUDDLE WELD SIZES SPECIFIED AS PER AWS D1.3. VISUAL SIZE OF WELD WILL BE LARGER.

18 DEPRESSED SLAB

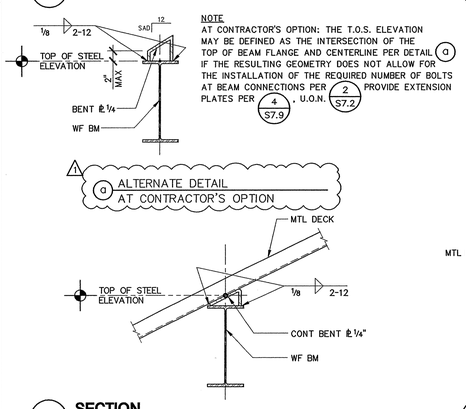

NOTE
AT CONTRACTOR'S OPTION: THE T.O.S. ELEVATION MAY BE DEFINED AS THE INTERSECTION OF THE TOP OF BEAM FLANGE AND CENTERLINE PER DETAIL a IF THE RESULTING GEOMETRY DOES NOT ALLOW FOR THE INSTALLATION OF THE REQUIRED NUMBER OF BOLTS AT BEAM CONNECTIONS PER 4/S7.9 U.O.N. PROVIDE EXTENSION PLATES PER 2/S7.2

19 SECTION

1"=1'-0"

14 DEPRESSED SLAB

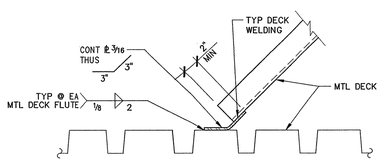

15 SECTION

1½"=1'-0"

10 EDGE OF DECK FLUTES PERPENDICULAR TO BEAM

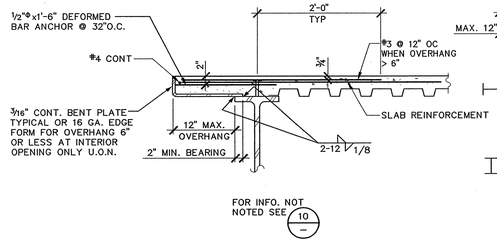

11 EDGE OF DECK FLUTES PARALLEL TO BEAM

6 SHEAR STUD DETAIL

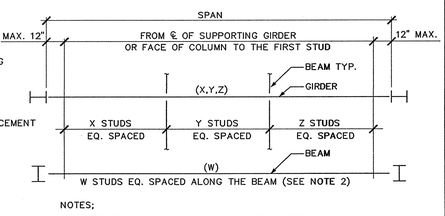

NOTES;
1. SEE FRAMING PLANS AND SHEAR STUD DETAILS THIS SHEET FOR STUD QUANTITIES. MAX. STUD SPACING IS AT 24"O.C.
2. SEE NOTE 15 OF STEEL DECKING AND SHEAR STUD NOTES THIS SHEET FOR ADDITIONAL SPACING INFO.

7 HEADED STUD SPACING DIAGRAM

3 STEEL DECK SCHEDULE

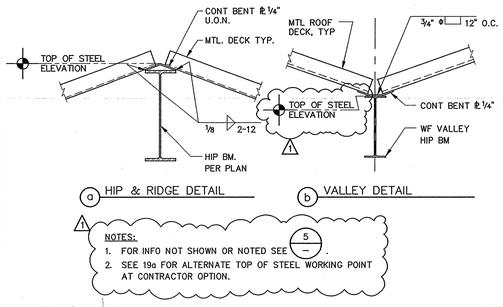

20 ROOF FRAMING HIP, RIDGE, AND VALLEY DETAIL

1"=1'-0"

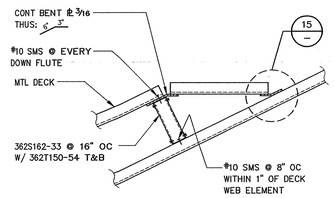

16 SECTION

3/4"=1'-0"

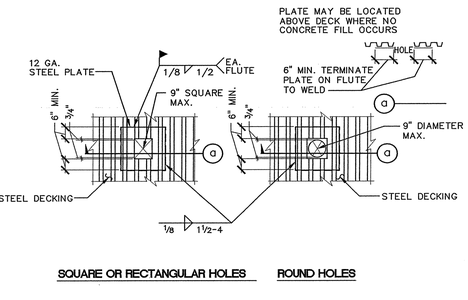

12 SMALL OPENING IN STEEL DECK

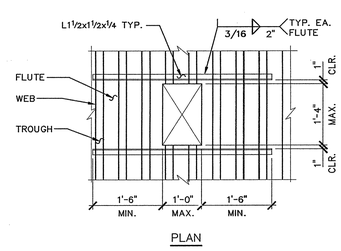

8 MEDIUM OPENING IN STEEL DECK

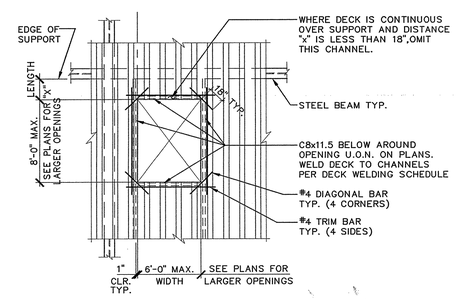

4 LARGE OPENING IN STEEL DECK

tBP architecture planning interiors management
LICENSED ARCHITECT ROBERT W. SUTTON No. 24885 RENEWAL 08/31/05 STATE OF CALIFORNIA
tBP/architecture
1000 Burnett Ave, Suite 140
Concord, CA 94520
ph: 925.246.6419 fx: 925.246.6495
architect

DASSE DESIGN INC. STRUCTURAL ENGINEERS
33 Tehama Street, Suite 300
San Francisco, CA 94105
415/243-9400 Fax 415/243-9555
REGISTERED PROFESSIONAL ENGINEER ROBERT R. SUTTON No. 23931 EXP. 12/31/05 STRUCTURAL CALIFORNIA
consultant

FILE NO. 7-01
APPROVED
DIV. OF THE STATE ARCHITECT
OFFICE OF REGULATION SERVICES
APPL. NO. 01-105719
BY TLS — S1
DATE 8-9-04

agency

SAN RAMON VALLEY CENTER

CONTRA COSTA COMMUNITY COLLEGE DISTRICT
SAN RAMON, CALIFORNIA

owner

tBP project number : 20212.00
file name:
drawn by: BH checked by:
date: 03-01-04 plot scale: 1:1

Rev:	date:	description:
1	05-26-04	

drawing title: building no:

METAL DECK TYPICAL DETAILS

drawing no:

S7.1

drawing of

FILE: E:\02B163\Struct\02b163S7.dwg05/27/04 at 1700
XREF: E:\02B163\Struct\02b163-TB.dwg

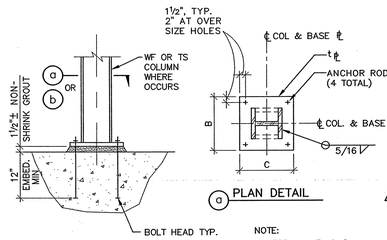

a PLAN DETAIL

NOTE:
1. FOR $t_{℄}$, B, & C SEE COLUMN SCHEDULE
2. OPTIONAL TO USE OVERSIZE HOLES AS PER (18)

MARK	COLUMN SIZE	BASE ℄ t x B x C	ANCHOR RODS	ANCHOR ROD EMBEDMENT	BASE PLATE DETAIL
C1	HSS4x4x¼	℄ ⅜x11x0'-11"	4-¾"Φ	18"	17/–
C2	HSS5x5x¼	℄ ⅜x12x0'-11"	4-¾"Φ	18"	17/–
C2A	HSS5x5x⅜	℄ ⅜x12x0'-11"	4-¾"Φ	18"	17/–
C3	HSS6x6x¼	℄ ⅜x13x1'-1"	4-¾"Φ	18"	17/–
C3A	HSS6x4x¼	–	–	–	16/S7.8
C4	HSS7x7x¼	℄ ⅜x14x1'-2"	4-¾"Φ	18"	17/–
C5	HSS8x8x¼	℄ ⅜x15x1'-3"	4-¾"Φ	18"	17/–
C6	HSS10x10x⅜	℄ ½x17x1'-5"	4-¾"Φ	18"	17/–
C7	HSS8x8x⅜	℄ ½x15x1'-3"	4-¾"Φ	18"	17/–
C8	W8x31	℄ ½x15x1'-3"	4-¾"Φ	18"	17/–
C9	HSS4½x4½x⅜	℄ ⅜x12x1'-0"	4-¾"Φ	18"	17/–
C10	W12x58	℄ ½x18x1'-6"	4-¾"Φ	18"	17/–
C11	W10x49	℄ ½x16x1'-4"	4-¾"Φ	18"	17/–
C12	W12x65	℄ ½x18x1'-6"	4-¾"Φ	18"	17/–
C–13	HSS6x8x½	℄ ½x9x0'-11"	4-¾"Φ	18"	17/–
C–BF	–	–	–	–	SEE NOTE (1)
C–MF	–	–	–	–	SEE NOTE (1)

NOTE:
1. FOR BRACE FRAME COLUMNS DENOTED "C-BF" AND MOMENT FRAME COLUMNS DENOTED "C-MF", REFER TO ELEVATIONS ON SHEETS S3.1, S3.2, AND S3.3.

17 COLUMN BASE PLATE

13 COLUMN SCHEDULE

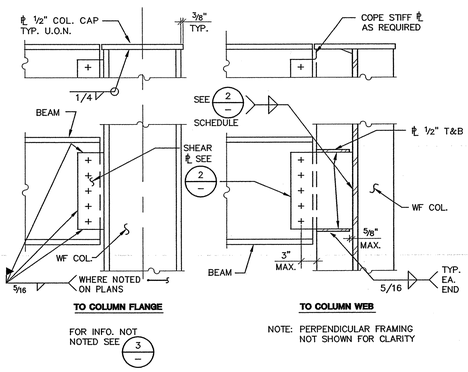

FOR INFO. NOT NOTED SEE (3)

NOTE: PERPENDICULAR FRAMING NOT SHOWN FOR CLARITY

9 BEAM TO COLUMN CONNECTION

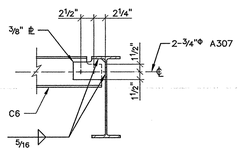

5 CHANNEL CONNECTION AT WF BEAM

1. SEE GENERAL NOTES ON SHEET S1.0.
2. UNLESS OTHERWISE NOTED:
   A. ALL BOLTS ARE 7/8"Φ A325SC U.O.N.
   B. ALL BUTT OR GROOVE WELDS ARE COMPLETE PENETRATION WELDS.
3. EACH COMPLETE PENETRATION WELD SHALL BE INSPECTED BY TESTING LABORATORY SEE SPECIFICATIONS.
4. WELDING DETAILS SHALL COMPLY WITH THE "STRUCTURAL WELDING CODE/STEEL" OF THE AMERICAN WELDING SOCIETY, LATEST ISSUE. FOR FURTHER WELDING REQUIREMENTS, SEE SPECIFICATIONS.
5. SCHEDULE WELDING AND BOLT TIGHTENING SEQUENCE TO MINIMIZE LOCKED UP STRESSES.
6. ERECTION CLIPS, BRACING, ETC. AS REQUIRED BY CONTRACTOR ARE NOT SHOWN.
7. UTILIZE TYPICAL CONNECTIONS IN SKEWED CONFIGURATIONS AS REQUIRED U.O.N.
8. THE DETAILS IN THIS SECTION SHOW STRUCTURAL FEATURES ONLY. FOR DETAILS AND DIMENSIONS NOT SHOWN, REFER TO DRAWINGS OTHER THAN STRUCTURAL.

1 STRUCTURAL STEEL NOTES

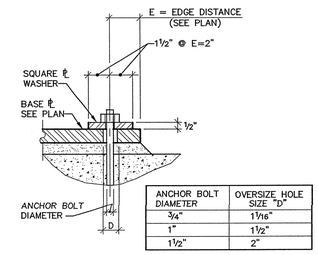

ANCHOR BOLT DIAMETER	OVERSIZE HOLE SIZE "D"
¾"	1 1/16"
1"	1 1/2"
1 1/2"	2"

18 OVERSIZED HOLE WITH WELD WASHER

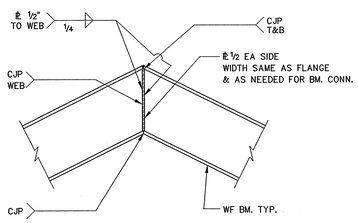

14 WF BEAM SPLICE

3/4"=1'-0"

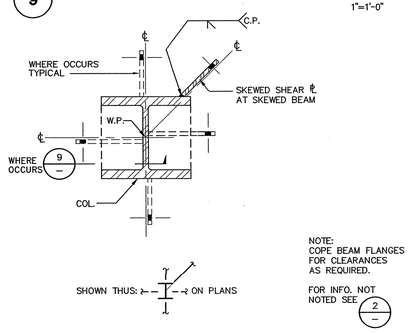

NOTE: COPE BEAM FLANGES FOR CLEARANCES AS REQUIRED.

FOR INFO. NOT NOTED SEE (2)

10 SKEWED BEAM TO WF COLUMN CONNECTION

1"=1'-0"

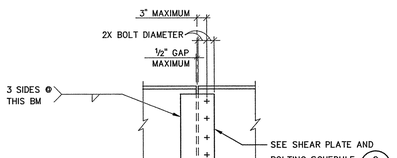

6 NON-MOMENT BEAM SPLICE

DEPTH OR SIZE OF BEAM	NO. OF BOLTS (2) ⅞"Φ A325SC U.O.N.	SHEAR PLATE	WELD (1) SIZE
8",10",C8	2	⅜"	5/16"
12",14", C12, MC12	3	⅜"	5/16"
16"	4	⅜"	5/16"
18"	5	⅜"	5/16"
21"	6	⅜"	5/16"
24"	7	½"	⅜"
27"	8	½"	⅜"
30"	8	½"	⅜"
33"	9	½"	⅜"

NOTES:
(1) USE COMPLETE PENETRATION WELDS AT ALL SKEWED CONNECTIONS WHERE AISC PRE-QUALIFIED FILLET WELDS ARE NOT POSSIBLE
(2) WHERE ROOF FRAMING GEOMETRY DOES NOT ALLOW FOR NUMBER OF BOLTS SPECIFIED, PROVIDE EXTENSION ℄ PER (4/S7.9) TO ACCOMODATE INSTALLATION OF ADDITIONAL BOLT(S), U.O.N. 1

2 BEAM CONNECTION SCHEDULE

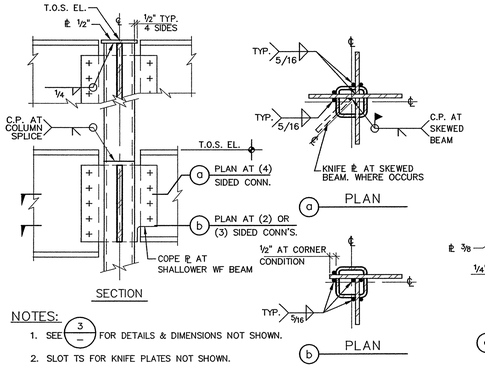

NOTES:
1. SEE (3) FOR DETAILS & DIMENSIONS NOT SHOWN.
2. SLOT TS FOR KNIFE PLATES NOT SHOWN.

19 BEAM TO TS COLUMN CONNECTION

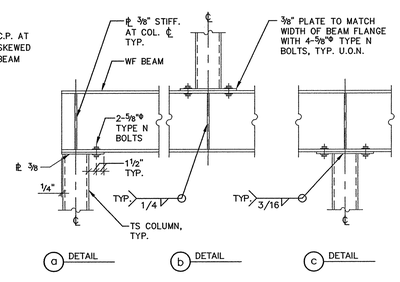

15 BEAM TO TS COLUMN CONNECTION

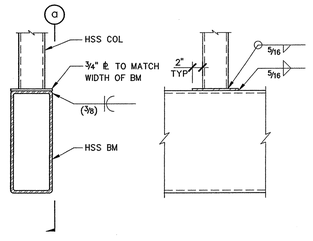

11 HSS BEAM TO HSS COLUMN CONNECTION

1"=1'-0"

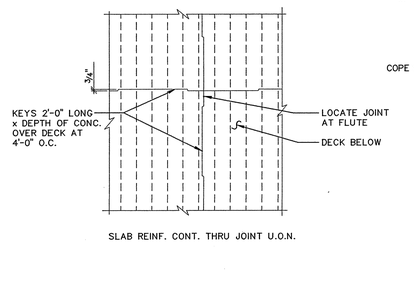

7 CONSTRUCTION JOINT AT CONCRETE FILL OVER STEEL DECK

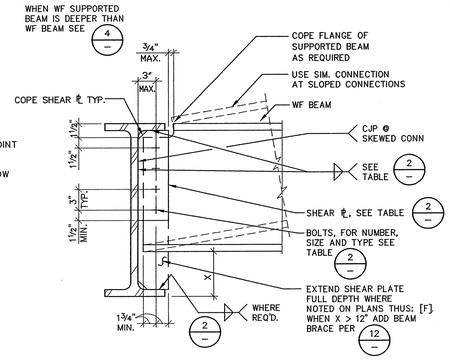

3 BEAM TO BEAM CONNECTION

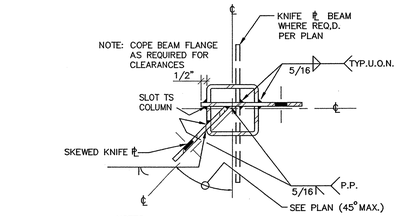

NOTES:
1. SEE (2) FOR DETAILS & DIMENSIONS NOT SHOWN.
2. SLOT TS FOR KNIFE PLATES NOT SHOWN.

20 SKEWED BEAM TO TS COLUMN CONNECTION

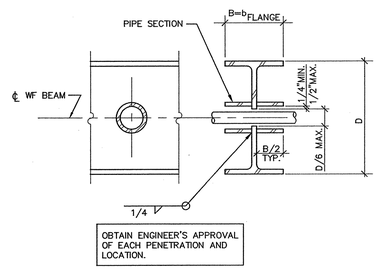

16 PIPE PENETRATION THRU BEAM WEB

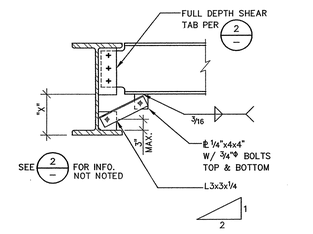

12 BEAM BRACING

1"=1'-0"

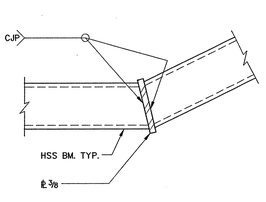

8 HSS BEAM SPLICE

3"=1'-0"

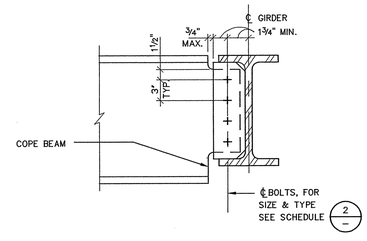

NOTES:
1. FOR INFO. NOT NOTED SEE (3)
2. PROVIDE MAX NUMBER OF BOLTS FOR DEPTH OF GIRDER

4 BEAM TO SHALLOWER BEAM CONNECTION

tBP architecture planning interiors management
tBP/Architecture
1000 Burnett Ave, Suite 140
Concord, CA 94520
ph: 925.246.6419 fx: 925.246.6495
architect

DASSE DESIGN INC.
STRUCTURAL ENGINEERS
33 New Montgomery St., Suite 800
San Francisco, CA 94105
415/243-4460 – Fax 415/243-4465
consultant

agency

SAN RAMON VALLEY CENTER
CONTRA COSTA COMMUNITY COLLEGE DISTRICT
SAN RAMON, CALIFORNIA

owner

tBP project number : 20212.00
file name:
drawn by: BH checked by:
date: 05-04-04 plot scale: 1:1

Rev:	date:	description:
1	05-26-04	

drawing title: STEEL TYPICAL DETAILS
building no.:
drawing no.: S7.2
drawing of

FILE: E:\02B163\Structural\02b163732.dwg 05/27/04 at 11:33
XREFs: E:\02B163\Structural\02b163-TB.dwg

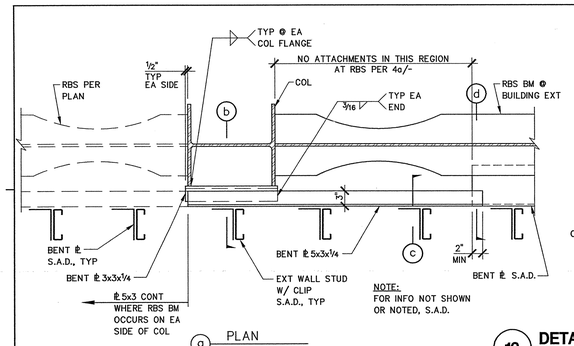

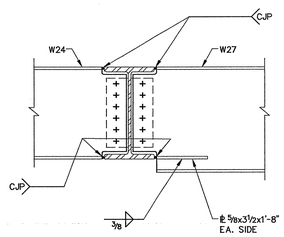

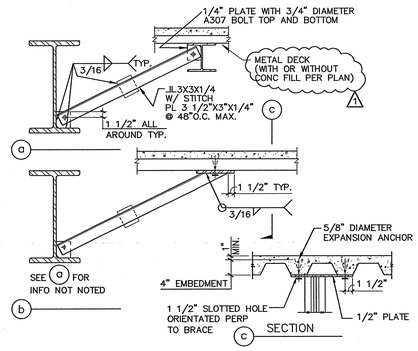

SMRF REDUCED BEAM SECTION (RBS) CONNECTION SCHEDULE								
BEAM	CONN. ℄ "A"	WELD "B"	DOUBLER ℄ "C"	WELD "D"	RBS DIMENSION "a"	RBS DIMENSION "b"	RBS DIMENSION "c"	REFENCE DETAIL
W16x40	⅜"	¼"	-	-	5"	11"	1½"	4 & 8
W24x55	½"	¼"	-	-	5"	16"	1½"	
W36x150	½"	¼"	-	-	8"	24"	3"	
W36x182	½"	¼"	⅝"	1"	8"	24"	3"	
W36x194	½"	¼"	-	-	8"	24"	3"	
W36x230	½"	¼"	⅜"	⅝"	9"	24"	3"	

NOTES:
1- WELDS IN DETAILS DENOTED "SWDC-A" SHALL BE CONSIDERED TO BE IN "SEISMIC WELD DEMAND CATAGORY A"
2- REMOVE BACKING BARS FOR ALL WELDS IN DETAILS 4 & 8 ON THIS SHEET.

1 MOMENT FRAME SCHEDULE

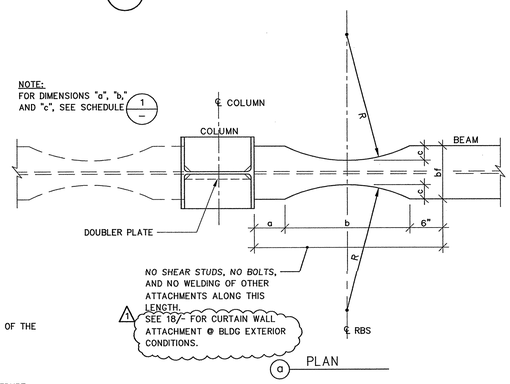

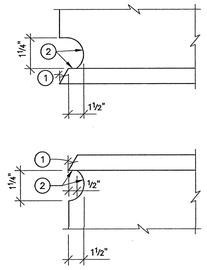

TOLERANCES SHALL NOT ACCUMULATE TO THE EXTENT THAT THE ANGLE OF THE ACCESS HOLE CUT TO THE FLANGE SURFACE EXCEEDS 25°.

NOTES:
1. BEVEL AS REQUIRED BY AWS D1.1 FOR SELECTED GROOVE WELD PROCEDURE.
2. GRIND SMOOTH

9 BEAM BRACING

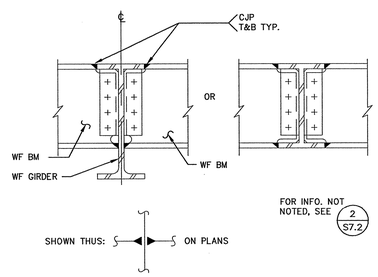

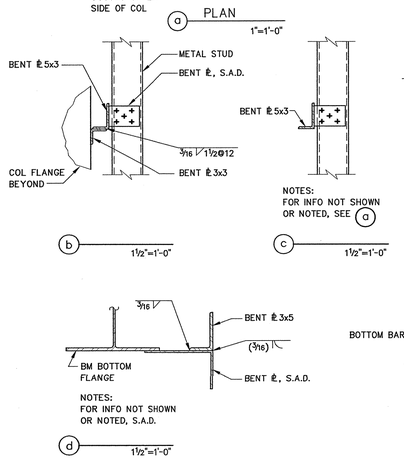

13 DETAIL

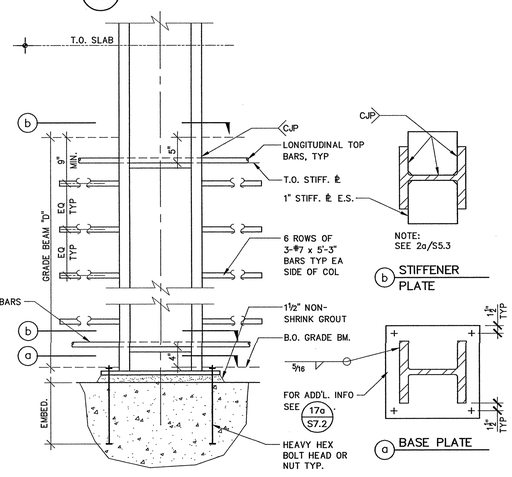

18 PLAN DETAIL

15 SMRF COLUMN BASE PLATE

1"=1'-0"

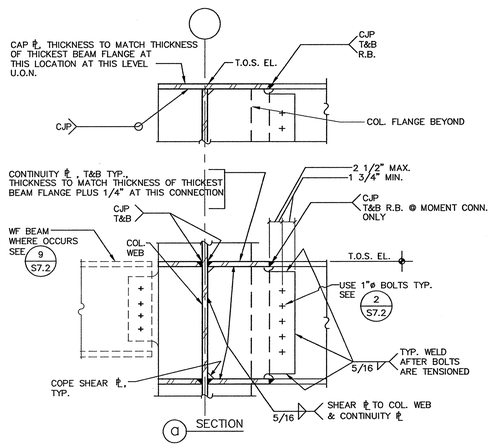

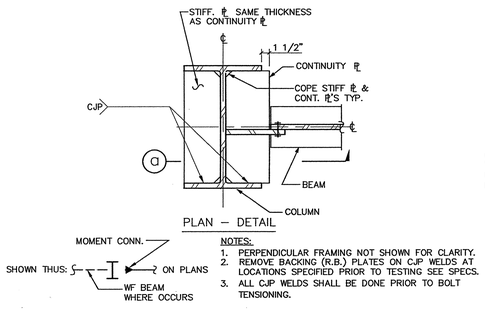

NOTES:
1. PERPENDICULAR FRAMING NOT SHOWN FOR CLARITY.
2. REMOVE BACKING (R.B.) PLATES ON CJP WELDS AT LOCATIONS SPECIFIED PRIOR TO TESTING SEE SPECS.
3. ALL CJP WELDS SHALL BE DONE PRIOR TO BOLT TENSIONING.

16 CANTILEVERED BEAM AND MOMENT CONNECTION TO COLUMN WEB

N.T.S

10 CANTILEVERED BEAM TO BEAM CONNECTION

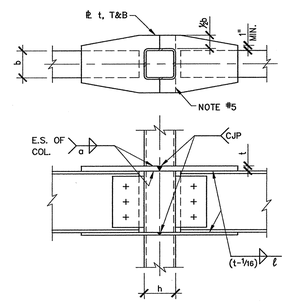

NOTES:
1. USE TYPICAL SHEAR ℄ CONNECTION.
2. t ≥ BEAM FLANGE THICKNESS
3. b = BEAM FLANGE WIDTH
5. ℄ = 1.33 x b
4. a = 0.67 x t x b/h
5. WHERE MOMENT CONN. OCCURS ON ONE SIDE OF COLUMN ONLY PROVIDE T&B ℄ FULL COLUMN WIDTH.

11 BEAM TO TS COLUMN MOMENT CONNECTION

1"=1'-0"

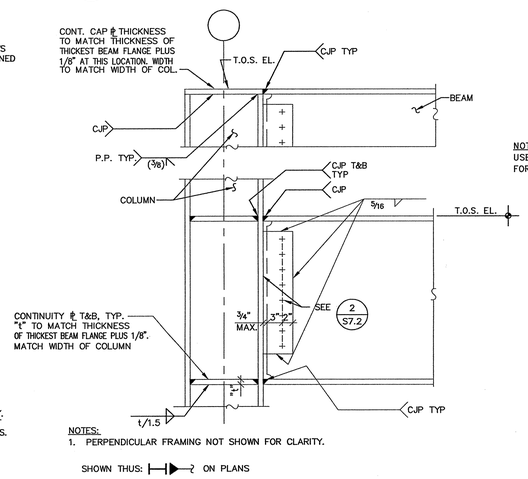

NOTES:
1. PERPENDICULAR FRAMING NOT SHOWN FOR CLARITY.

SHOWN THUS: ON PLANS

12 CANTILEVERED BEAM TO COLUMN FLANGE CONNECTION

6 DETAIL

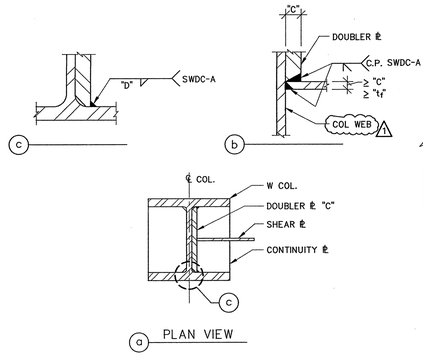

NOTE:
USE A992, GR. 50 STEEL FOR ALL DOUBLER PLATES.

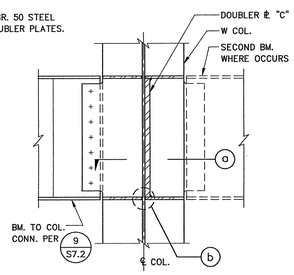

8 DOUBLER PLATE AT SMRF MOMENT CONNECTION

1"=1'-0"

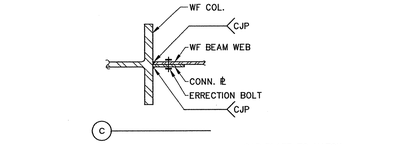

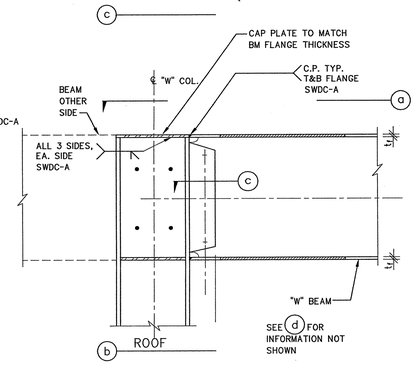

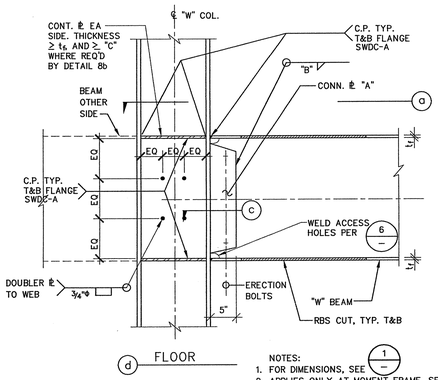

NOTES:
1. FOR DIMENSIONS, SEE (1/-)
2. APPLIES ONLY AT MOMENT FRAME, SEE S3.1.

4 SMRF BEAM TO COLUMN FLANGE MOMENT CONNECTION

1"=1'-0"

tBP
architecture
planning
interiors
management
tBP/Architecture
1000 Burnett Ave, Suite 140
Concord, CA 94520
ph: 925.246.6419 fx: 925.246.6495
architect
DASSE DESIGN INC.
STRUCTURAL ENGINEERS
33 San Pedro Ct. Suite 260
San Ramon, CA 94583
415/263-3400 - Fax 415/356-7100
consultant

FEB. NO. 22-21
DEPARTMENT OF STATE ARCHITECT
DIVISION OF THE STATE ARCHITECT
OFFICE OF REGULATION SERVICES
APPL NO. 01-105719
ACC. DSA SS
DATE 6-7-04

agency

SAN RAMON VALLEY CENTER
CONTRA COSTA COMMUNITY COLLEGE DISTRICT
SAN RAMON, CALIFORNIA

owner

tBP project number : 2021.00
file name:
drawn by: JDS checked by:
date: 03-09-04 plot scale: 1:1

Rev:	date:	description:
1	05-26-04	

drawing title: MOMENT FRAME DETAILS
building no:
drawing no: S7.3
drawing of

FILE: E:\02B163\Struct\02b163s73.dwg05/27/04 at 13:39
(XREF: E:\02B163\Struct\02b163-TB.dwg)

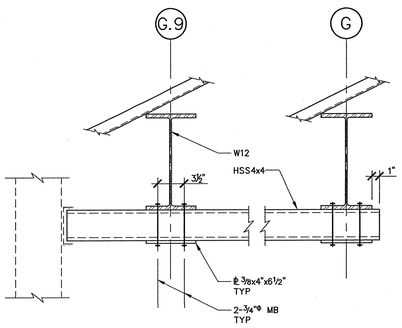

17 **DETAIL** 1½"=1'-0"

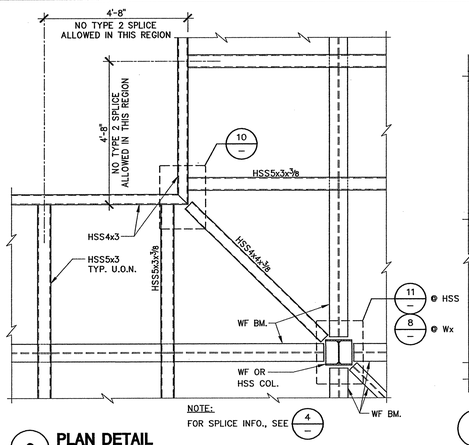

9 **PLAN DETAIL ROOF CORNER CONDITION** ½"=1'-0"

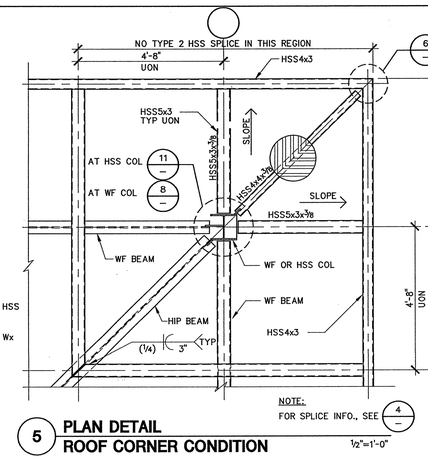

5 **PLAN DETAIL ROOF CORNER CONDITION** ½"=1'-0"

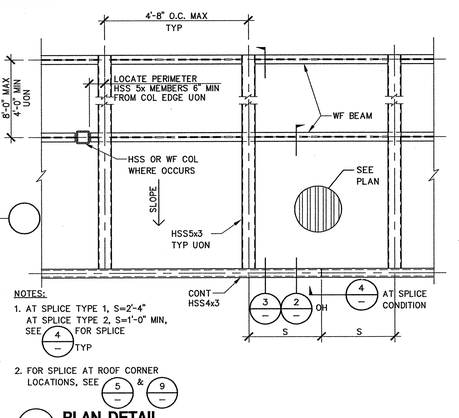

1 **PLAN DETAIL ROOF OVERHANG** ½"=1'-0"

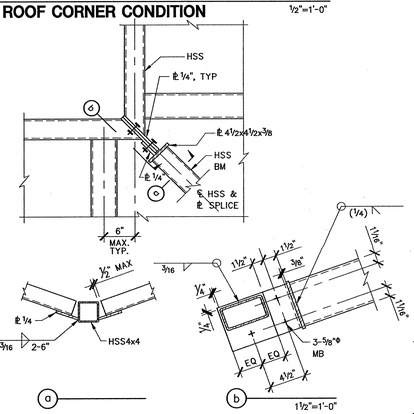

10 **PLAN DETAIL** 1"=1'-0"

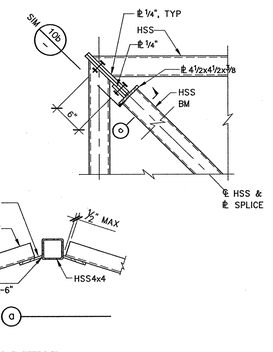

PLAN DETAIL 1"=1'-0"

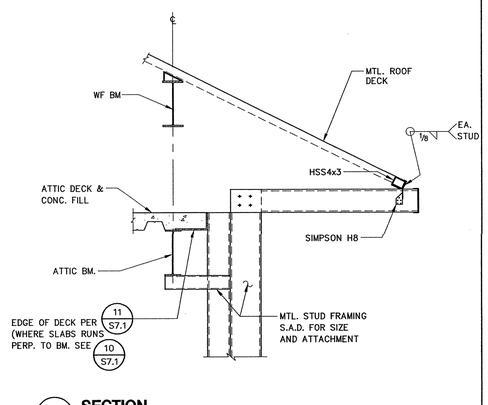

SECTION 1½"=1'-0"

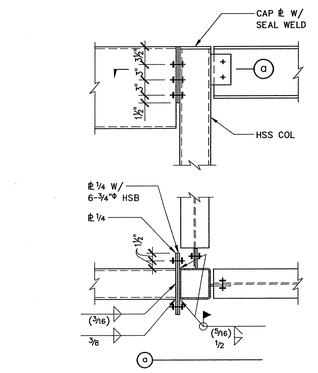

19 **DETAIL** 1"=1'-0"

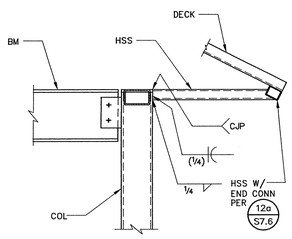

15 **DETAIL** 1"=1'-0"

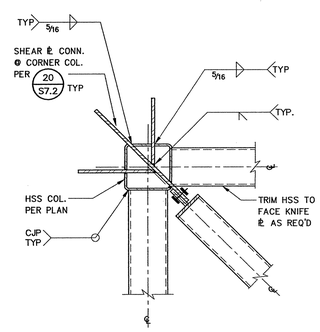

11 **PLAN DETAIL** 1½"=1'-0"

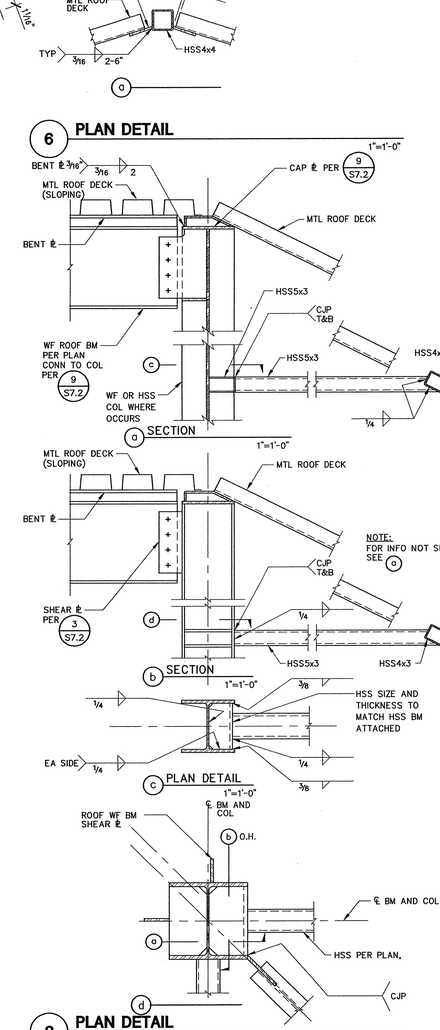

8 **PLAN DETAIL** 1½"=1'-0"

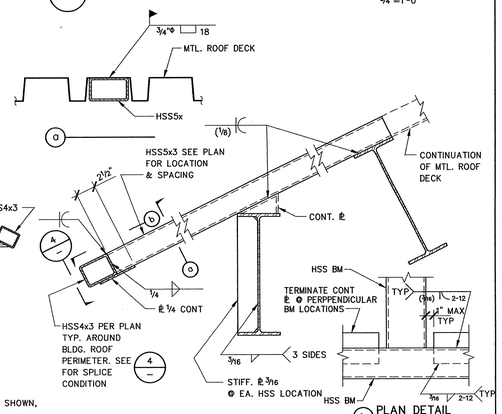

2 **SECTION** ¾"=1'-0"

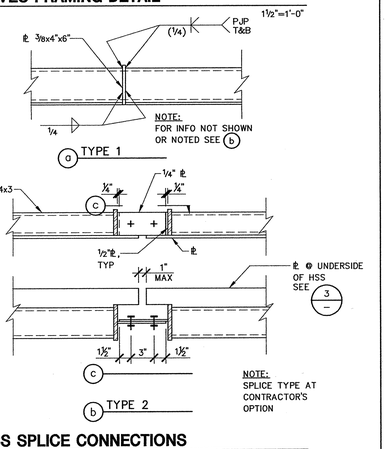

3 **EAVES FRAMING DETAIL** 1½"=1'-0"

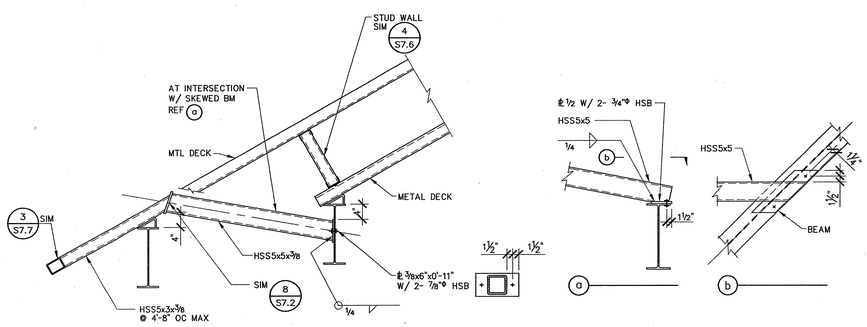

20 **SECTION** ¾"=1'-0"

PLAN DETAIL 1½"=1'-0"

4 **HSS SPLICE CONNECTIONS** 1½"=1'-0"

tBP/architecture
1000 Burnett Ave, Suite 140
Concord, CA 94520
ph: 925.246.6419 fx: 925.246.6495

architect

DASSE DESIGN INC
STRUCTURAL ENGINEERS
33 New Montgomery St., Suite 850
San Francisco, CA 94105
415.243.4600 — Fax 415.243.4601

consultant

FILE NO. 7-21
APPROVED STAMP
DIV. OF THE STATE ARCHITECT
OFFICE OF REGULATION SERVICES
APPL NO. 01-105719
AC. FLS
DATE. 5-5-06

agency

SAN RAMON VALLEY CENTER

CONTRA COSTA COMMUNITY COLLEGE DISTRICT

SAN RAMON, CALIFORNIA

owner

tBP project number : 20212.00

file name:

drawn by: checked by:

date: 05-04-04 plot scale: 1:1

Rev:	date:	description:

drawing title: STEEL DETAILS

building no.:

drawing no: S7.7

drawing of

FILE: E:\02B163\Struct\02b163377.dwg 03/16/04 at 08:30
XREF: E:\02B163\Struct\02b163-TB.dwg

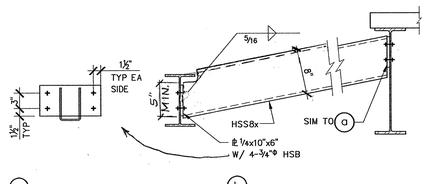

17 **DETAIL** 1"=1'-0"

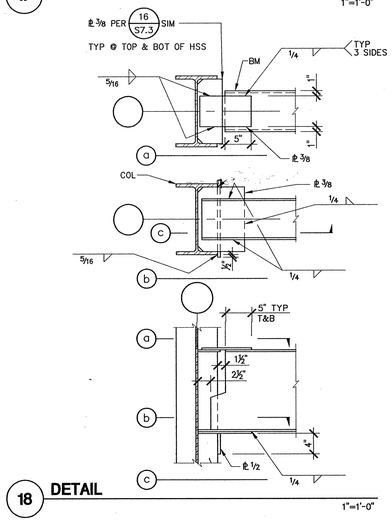

18 **DETAIL** 1"=1'-0"

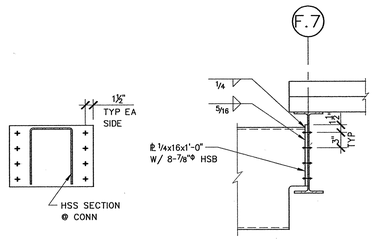

13 **DETAIL** 1"=1'-0"

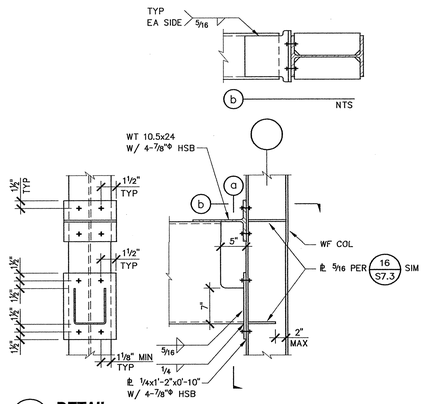

14 **DETAIL** 1"=1'-0"

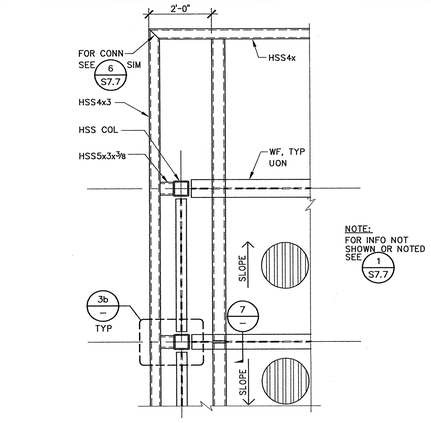

9 **PLAN DETAIL** 1½"=1'-0"

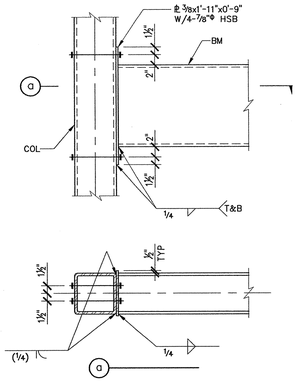

10 **HSS BEAM TO HSS COL CONNECTION** 1"=1'-0"

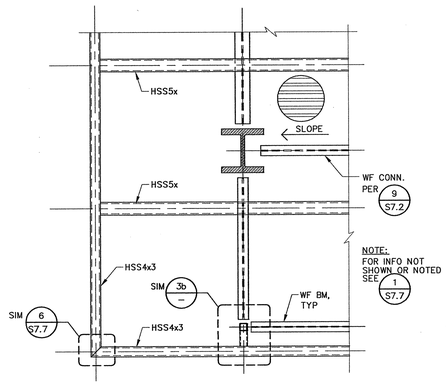

5 **PLAN DETAIL** 1½"=1'-0"

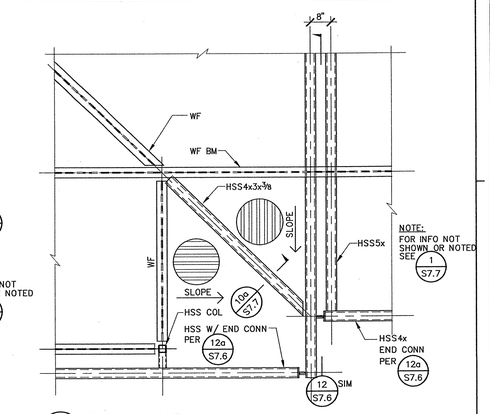

1 **PLAN DETAIL** 1½"=1'-0"

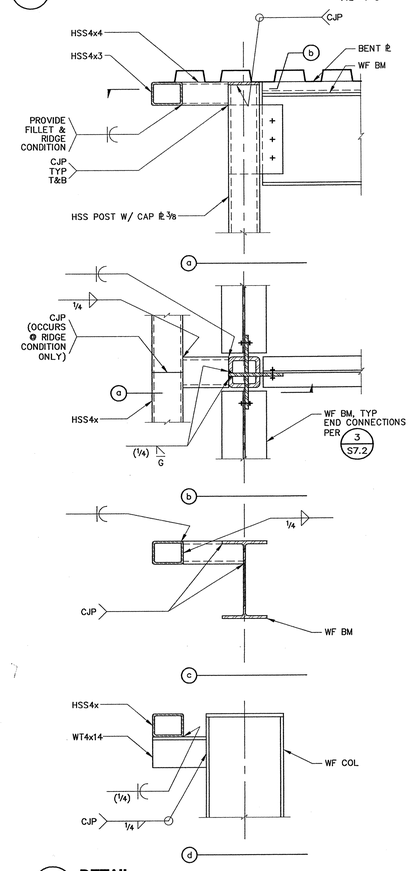

3 **DETAIL** 1½"=1'-0"

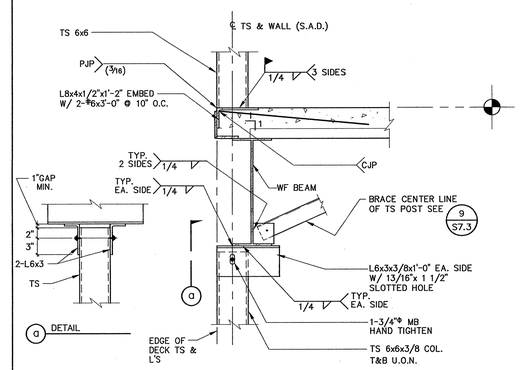

19 **ELEVATOR RAIL BRACING**

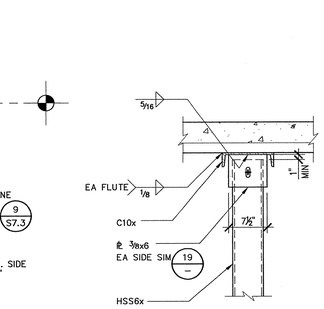

15 **DETAIL** 1"=1'-0"

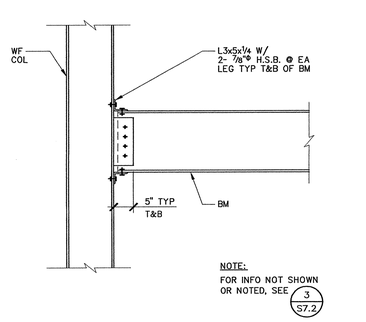

11 **BM TO COL DETAIL** 3/4"=1'-0"

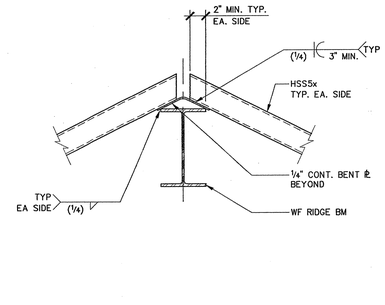

7 **DETAIL** 1½"=1'-0"

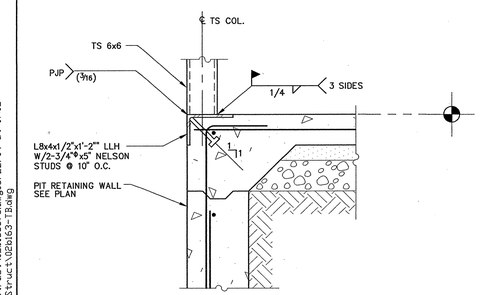

20 **ELEVATOR RAIL SUPPORT AT PIT** 1"=1'-0"

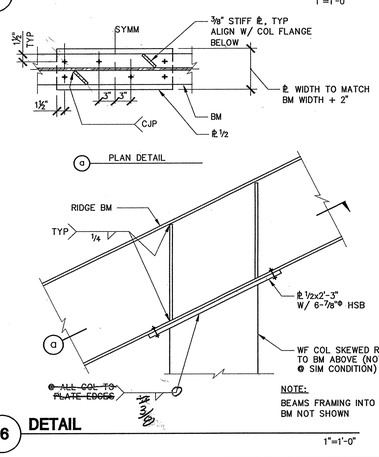

16 **DETAIL** 1"=1'-0"

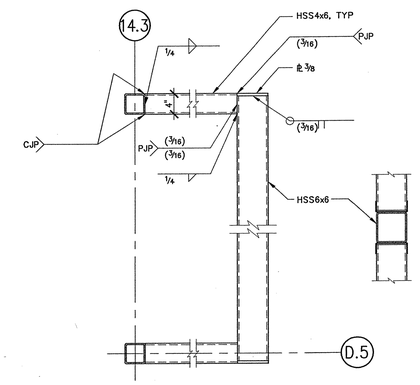

4 **PLAN DETAIL** 1"=1'-0"

FILE: E:\02B163\Struct\02b163S78.dwg03/22/04 at 17:02
XREF: E:\02B163\Struct\02b163-TB.dwg

tBP
architecture
planning
interiors
management

tBP/Architecture
1000 Burnett Ave, Suite 140
Concord, CA 94520
ph: 923.246.6495 fx: 923.246.6495

architect

DASSE DESIGN INC.
STRUCTURAL ENGINEERS
33 New Montgomery St., Suite 850
San Francisco, CA 94105
415/243-0555 Fax 415/243-9105

consultant

FILE NO. 7-01
DIVISION OF THE STATE ARCHITECT
OFFICE OF REGULATION SERVICES
APPL NO. 01-105719
AC FLS SS
DATE

agency

SAN RAMON VALLEY CENTER

CONTRA COSTA COMMUNITY COLLEGE DISTRICT

SAN RAMON, CALIFORNIA

owner

tBP project number : 20212.00
file name:
drawn by: checked by:
date: 03-04-04 plot scale: 1:1

Rev:	date:	description:

drawing title: STEEL DETAILS
building no:

drawing no: S7.8
drawing of

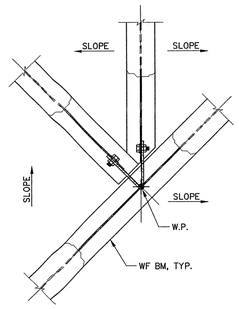

17 PLAN DETAIL
1"=1'-0"

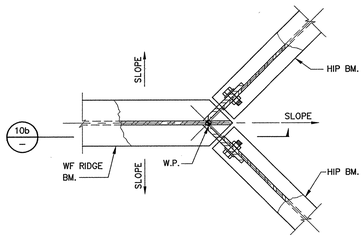

13 PLAN DETAIL
1½"=1'-0"

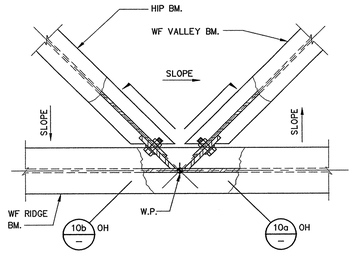

9 PLAN DETAIL
1½"=1'-0"

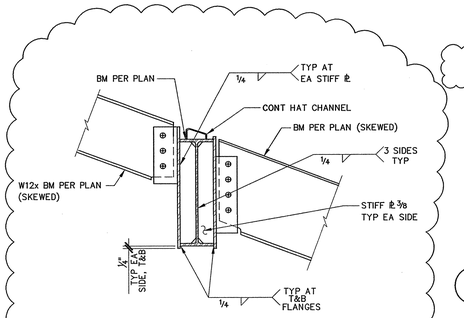

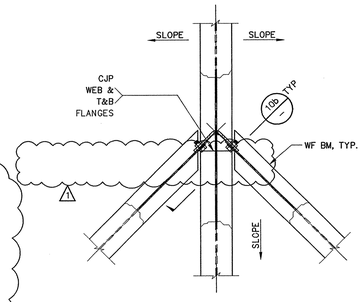

1 PLAN DETAIL
1"=1'-0"

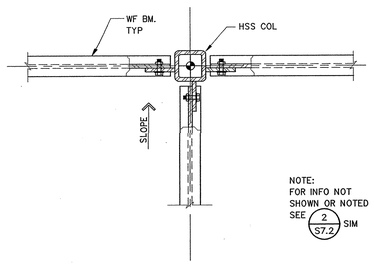

18 PLAN DETAIL
1"=1'-0"

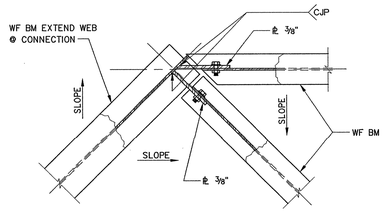

14 PLAN DETAIL
1½"=1'-0"

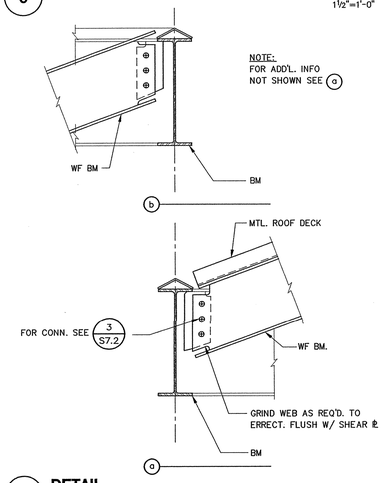

10 DETAIL
1"=1'-0"

7 PLAN DETAIL
1"=1'-0"

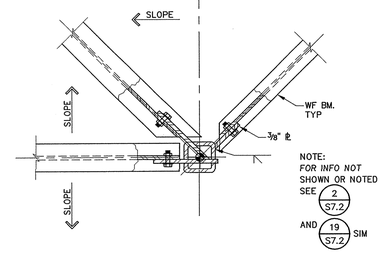

2 PLAN DETAIL
1"=1'-0"

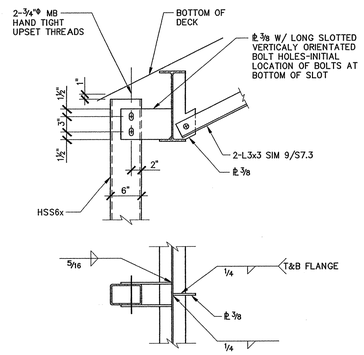

19 TUBES FOR ROLLING DOOR
1"=1'-0"

11 PLAN DETAIL
1½"=1'-0"

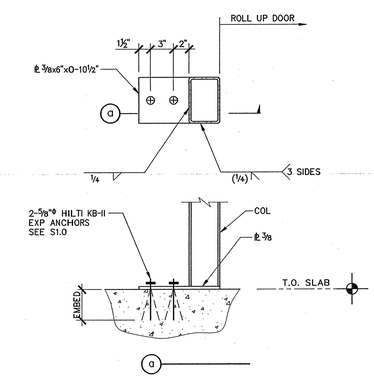

20 DETAIL
1½"=1'-0"

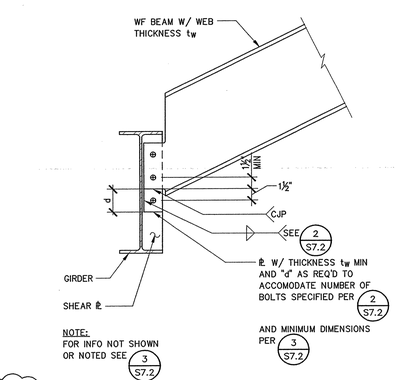

4 DETAIL
1½"=1'-0"

tBP
architecture
planning
interiors
management

tBP/Architecture
1000 Burnett Ave, Suite 140
Concord, CA 94520
ph: 925.246.6419 fx: 925.246.6495

architect

DASSE DESIGN INC.
STRUCTURAL ENGINEERS
235 Montgomery St. Suite 1050
San Francisco, CA 94104
415.421.2903 fax 415.421.2905

consultant

PLANS NO. 721
APPROVED
CONTRA COSTA COUNTY
DIVISION OF FIRE PREVENTION
OFFICE OF REGULATION SERVICES
APP. NO. 01-100719
BY [signature]
DATE 8-9-04

agency

SAN RAMON VALLEY CENTER

CONTRA COSTA COMMUNITY COLLEGE DISTRICT

SAN RAMON, CALIFORNIA

owner

tBP project number : 2021.00

file name:

drawn by: checked by:

date: 03-04-04 plot scale: 1:1

Rev:	date:	description:
1	05-26-04	

drawing title: STEEL DETAILS

building no.:

drawing no.: S7.9

drawing of

FILE: E:\02B163\S7\rac1\02b163s7s4.dwg 05/27/04 at 11:55
XREF: E:\02B163\S7\rac1\02b163-T1.dwg

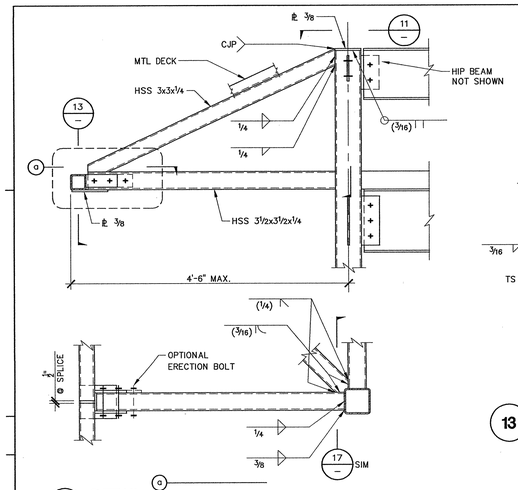

17 DETAIL

1" = 1'-0"

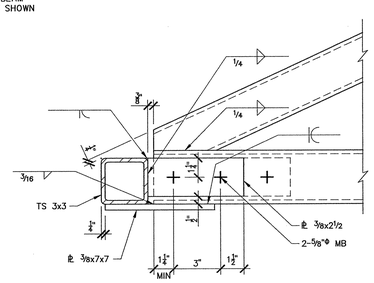

13 DETAIL

3" = 1'-0"

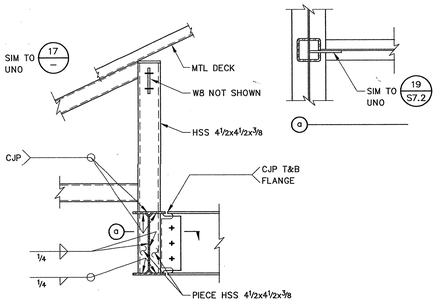

18 DETAIL

1" = 1'-0"

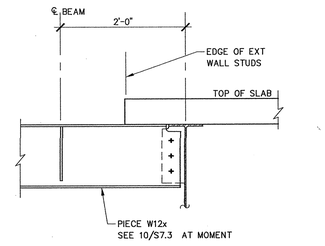

14 DETAIL

1" = 1'-0"

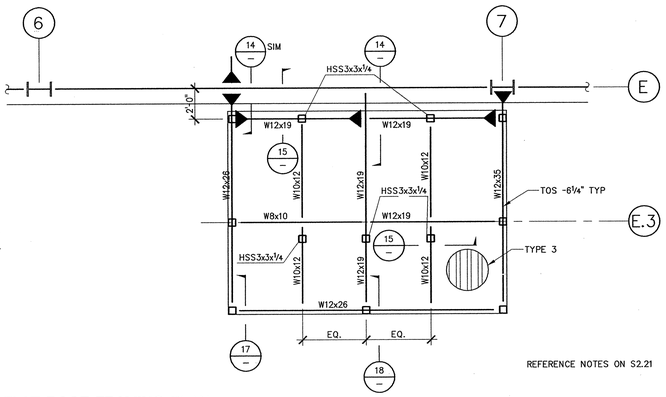

9 FLAT ROOF FRAMING PLAN

1/4"=1'-0"

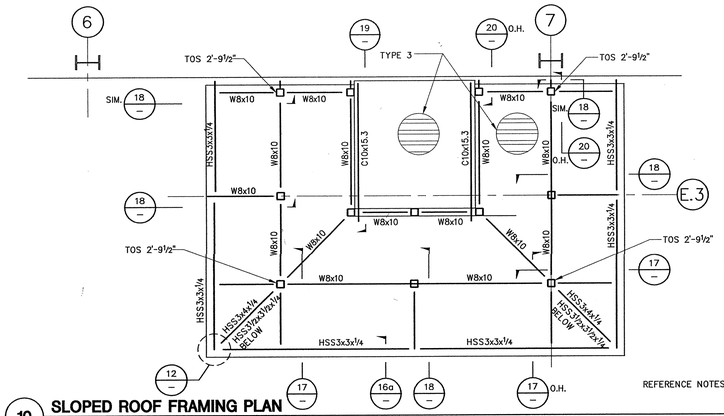

10 SLOPED ROOF FRAMING PLAN

1/4"=1'-0"

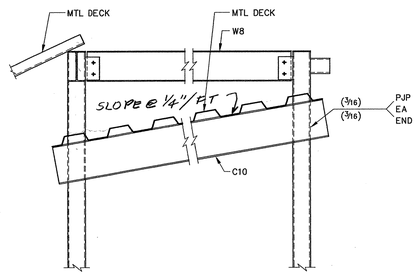

19 DETAIL

3/4" = 1'-0"

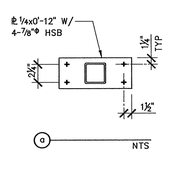

15 DETAIL

1" = 1'-0"

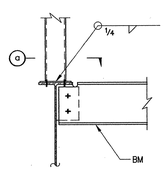

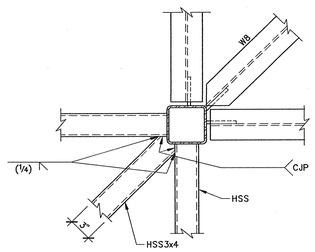

11 PLAN DETAIL

1 1/2" = 1'-0"

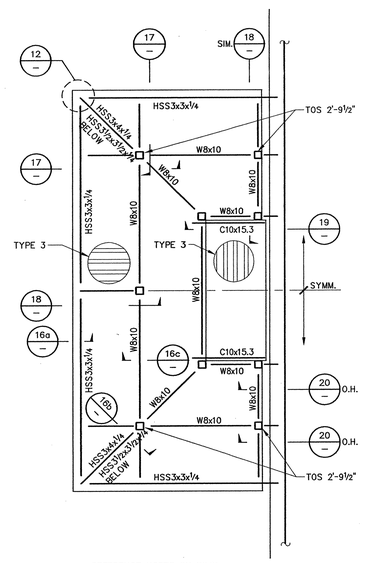

8 SLOPED ROOF FRAMING PLAN

1/4" = 1'-0"

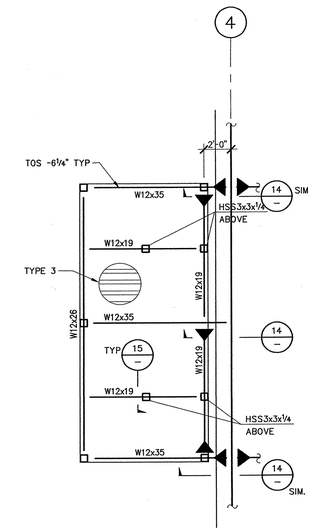

4 FLAT ROOF FRAMING PLAN

1/4" = 1'-0"

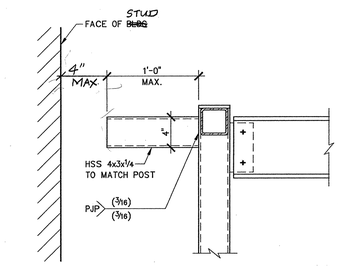

20 DETAIL

1 1/2" = 1'-0"

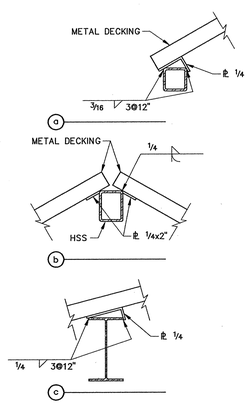

16 DETAIL

1 1/2" = 1'-0"

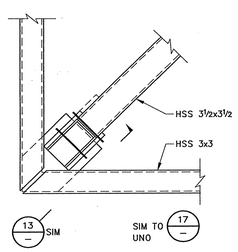

12 PLAN DETAIL

1 1/2" = 1'-0"

tBP
architecture
planning
interiors
management
tBP/Architecture
1000 Burnett Ave, Suite 140
Concord, CA 94520
ph: 925.246.6419 fx: 925.246.6495
architect

DASSE DESIGN INC.
STRUCTURAL ENGINEERS
33 New Montgomery, Suite 850
415/781-8400 Fax 415/781-8995
consultant

FILE NO. 7-01
DIV. OF IDENTIFICATION & RECORDS
OFFICE OF REGULATION SERVICES
APPL. NO. 01-103719
AC. ISS. 5/2/02
DATE

agency

SAN RAMON VALLEY CENTER

CONTRA COSTA COMMUNITY COLLEGE DISTRICT

SAN RAMON, CALIFORNIA

owner

tBP project number : 20212.00
file name:
drawn by: checked by:
date: 03-04-04 plot scale: 1:1

Rev:	date:	description:

drawing title: LOW ROOF FRAMING
building no:

drawing no: S7.10
drawing of

FILE: E:\02B163\Struct\02b163710.dwg 03/05/04 at 17:05
XREF: E:\02B163\Struct\02b163-TB.dwg

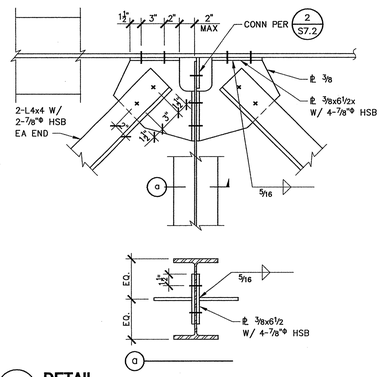

17 DETAIL

1½" = 1'-0"

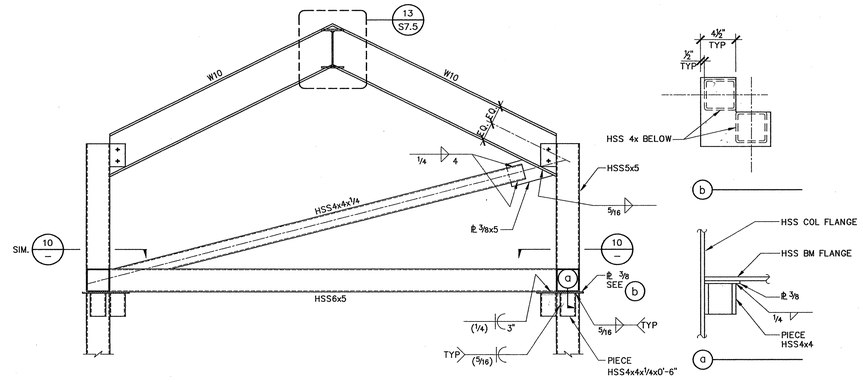

13 DETAIL

¾"=1'-0"

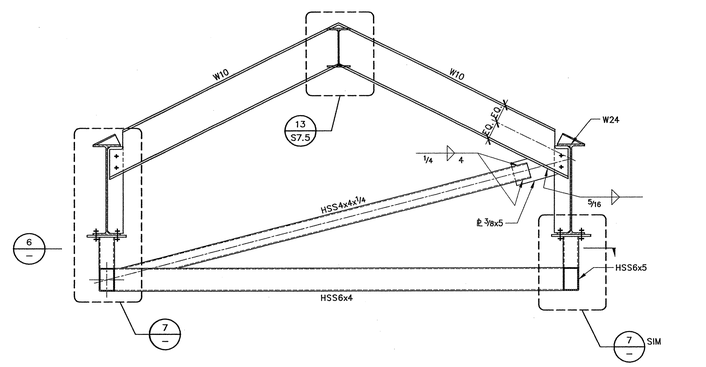

5 DETAIL

¾"=1'-0"

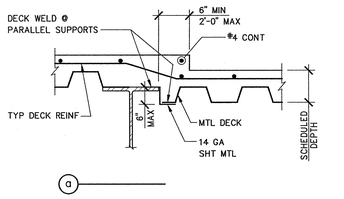

18 TYPICAL STEP PARALLEL TO DECK SPAN

1" = 1'-0"

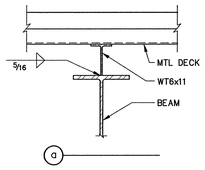

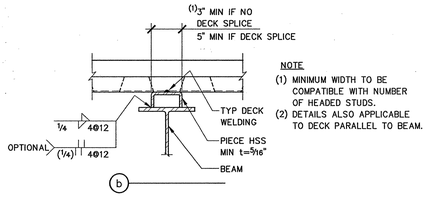

NOTE
(1) MINIMUM WIDTH TO BE COMPATIBLE WITH NUMBER OF HEADED STUDS.
(2) DETAILS ALSO APPLICABLE TO DECK PARALLEL TO BEAM.

19 TYPICAL FILLER AT DEPRESSED BEAMS

1" = 1'-0"

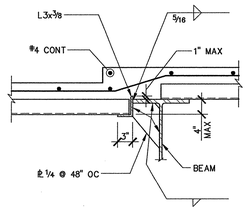

20 TYPICAL DETAIL AT DEPRESSION

1" = 1'-0"

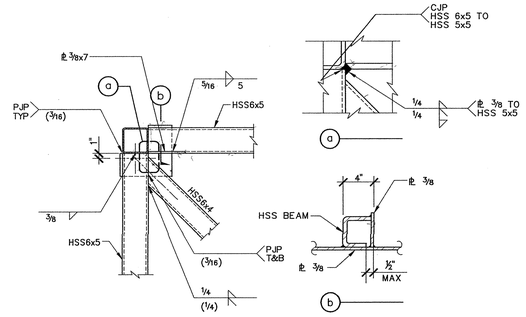

10 PLAN DETAIL

1"=1'-0"

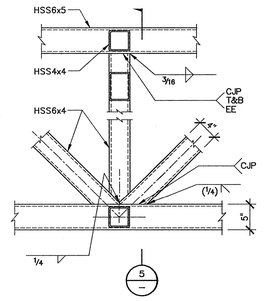

6 PLAN DETAIL

1"=1'-0"

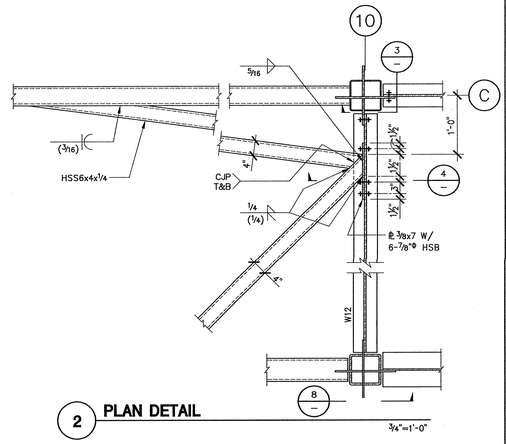

2 PLAN DETAIL

¾"=1'-0"

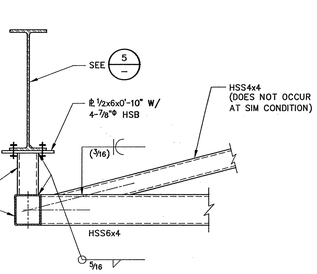

7 DETAIL

1"=1'-0"

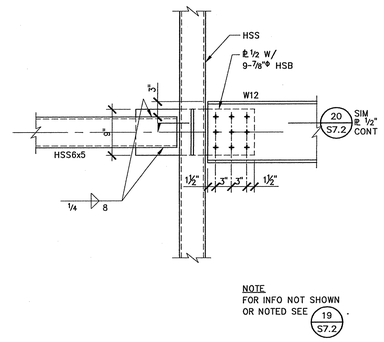

NOTE
FOR INFO NOT SHOWN OR NOTED SEE 19 S7.2

3 DETAIL

1"=1'-0"

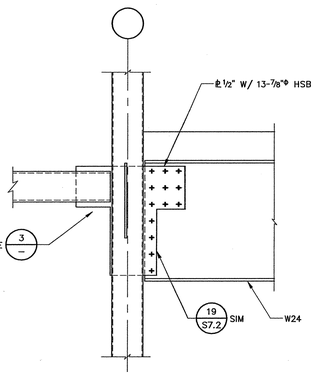

8 DETAIL

1"=1'-0"

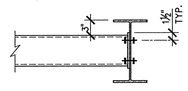

4 DETAIL

1"=1'-0"

tBP
architecture
planning
interiors
management

tBP/Architecture
1000 Burnett Ave, Suite 140
Concord, CA 94520
ph: 925.246.6419 fx: 925.246.6495

architect

DASSE DESIGN INC.
STRUCTURAL ENGINEERS
235 Montgomery St., Suite 1000
San Francisco, CA 94104
415.291.8400 Fax 415.291.8405

consultant

FILE NO. 7-01
IDENTIFICATION STAMP
DIV. OF THE STATE ARCHITECT
OFFICE OF REGULATION SERVICES
APPL NO. 01-105719
AC
DATE 5/5

agency

SAN RAMON VALLEY CENTER
CONTRA COSTA COMMUNITY COLLEGE DISTRICT
SAN RAMON, CALIFORNIA

owner

tBP project number : 2021.00
file name:
drawn by: checked by:
date: 03-01-04 plot scale: 1:1

Rev:	date:	description:

drawing title: STEEL & TYPICAL METAL DECK DETAILS

building no.:

drawing no.: S7.11

drawing of

FILE: E:\02B163\S+uc+\02b163711.dwg 03/19/04 a t 11:10
XREFs E:\02B163\S+uc+\02b163-TB.dwg

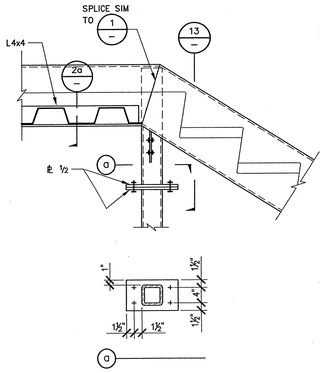

17 **DETAIL** 1" = 1'-0"

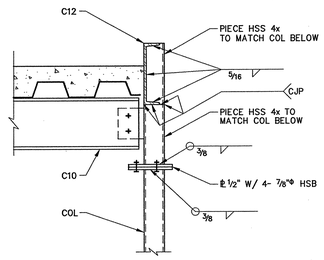

13 **DETAIL** 1" = 1'-0"

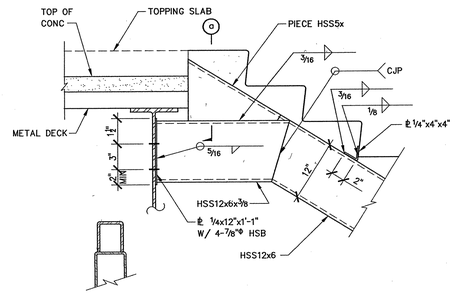

a

5 **DETAIL** 1" = 1'-0"

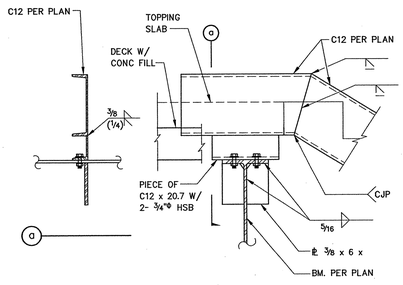

1 **DETAIL** 1" = 1'-0"

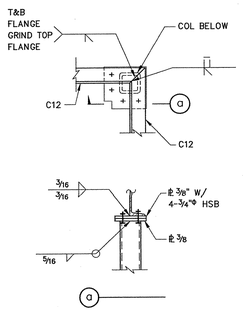

18 **DETAIL** 1" = 1'-0"

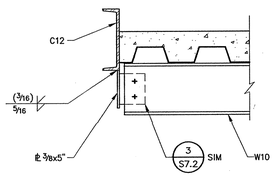

14 **DETAIL** 1" = 1'-0"

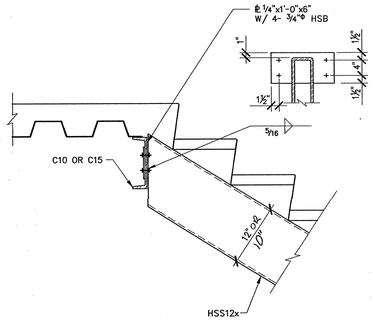

10 **DETAIL** 1" = 1'-0"

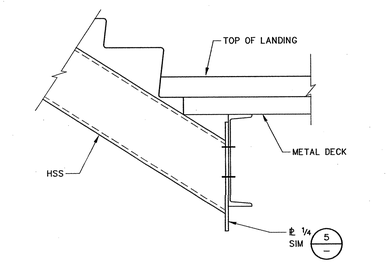

6 **DETAIL** 1" = 1'-0"

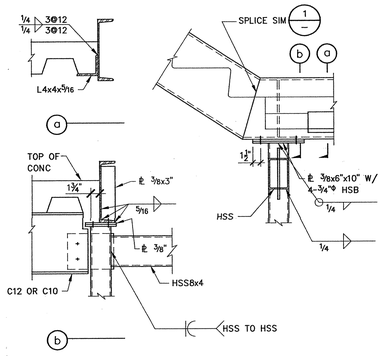

2 **DETAIL** 1" = 1'-0"

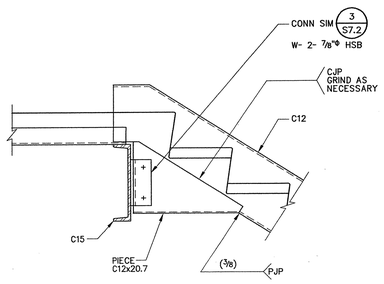

19 **DETAIL** 1" = 1'-0"

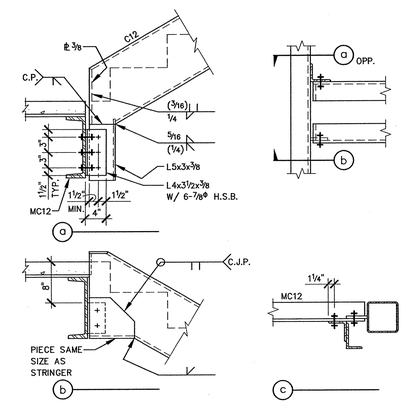

15 **DETAIL** 1" = 1'-0"

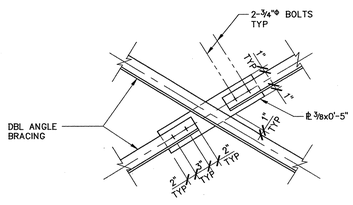

11 **ANGLE BRACING CONNECTION** 1" = 1'-0"

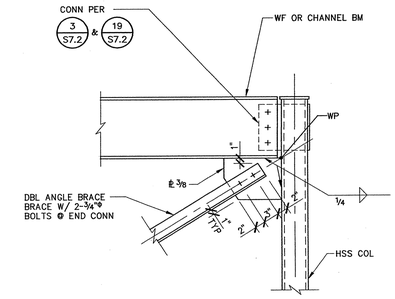

7 **ANGLE BRACE CONNECTION** 1" = 1'-0"

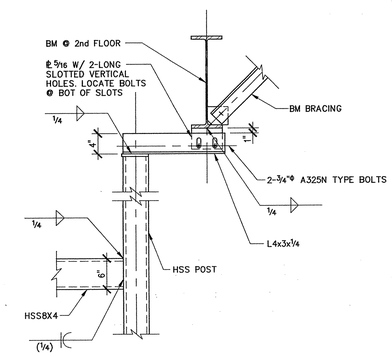

3 **DETAIL** 1" = 1'-0"

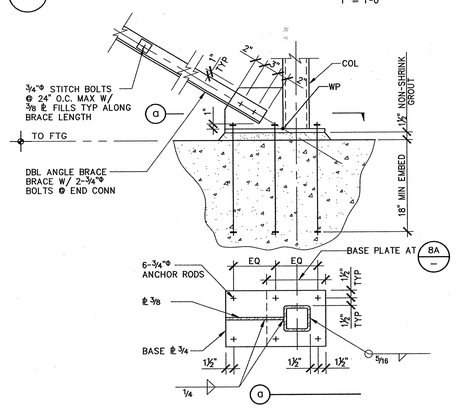

8A 8 **ANGLE BRACE FOUNDATION CONNECTION** 1" = 1'-0"

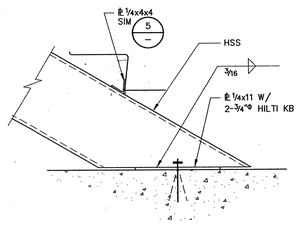

4 **DETAIL** 1½" = 1'-0"

tBP
architecture
planning
interiors
management

LICENSED ARCHITECT RICHARD H. MANION, A.I.A. NO. C-18815 STATE OF CALIFORNIA

tBP/Architecture
1000 Burnett Ave, Suite 140
Concord, CA 94520
ph: 925.246.6419 fx: 925.246.6495

architect

DASSE DESIGN INC.
STRUCTURAL ENGINEERS
33 New Montgomery St., Suite 850
San Francisco, California 94105
415/243-8400 * Fax 415/243-8499

REGISTERED PROFESSIONAL ENGINEER JEFF R. DASSE NO. S-5705 STRUCTURAL STATE OF CALIFORNIA

consultant

IDENTIFICATION STAMP
DIV. OF THE STATE ARCHITECT
OFFICE OF REGULATION SERVICES
APPL NO. 01-105719
AC. FLS 5/1
DATE

agency

SAN RAMON VALLEY CENTER

CONTRA COSTA COMMUNITY COLLEGE DISTRICT

SAN RAMON, CALIFORNIA

owner

tBP project number : 20212.00
file name:
drawn by: checked by:
date: 03-09-04 plot scale: 1:1

Rev:	date:	description:

drawing title: STEEL DETAILS
building no.:

drawing no.: S7.12
drawing of

FILE: S:\JOBS\62's\project\20s\62C712.dwg 03/22/04 at 17:25
XREF: S:\JOBS\62's\20's\62C1X3's STRUCT\20s62C-TB.dwg

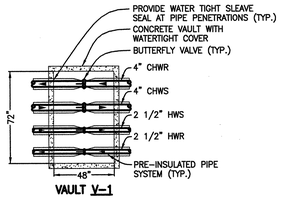

VAULT V-1

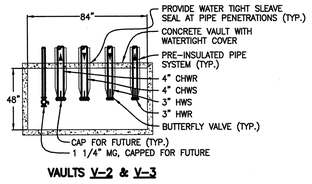

VAULTS V-2 & V-3

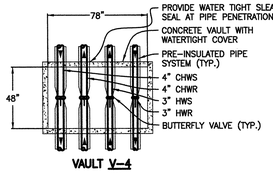

VAULT V-4

HYDRONIC VAULT DETAILS

NO SCALE

3 / MP1.0

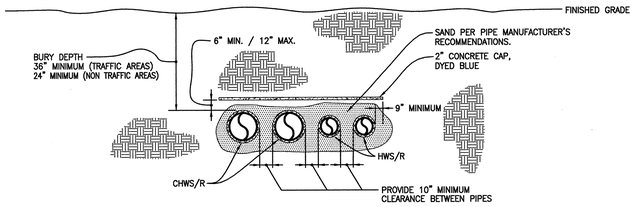

HYDRONIC PIPING LAYOUT

NO SCALE

2 / MP1.0

Notice to Bidders:

For "Phase 1" Gas line improvements which are not part of this contract, refer to sheet MP1.1 of the "Site Improvements" drawings.

MECHANICAL/PLUMBING - SITE PLAN

SCALE: 20'=1'-0"

1 / MP1.0

tBP
architecture
planning
interiors
management

tBP/Architecture
1000 Bumett Ave, Suite 140
Concord, CA 94520
ph: 9252466419 fx: 9252466495

architect

AINSWORTH ASSOCIATES
MECHANICAL ENGINEERS
SACRAMENTO, CA

consultant

APPROVED
DEPARTMENT OF THE STATE ARCHITECT
OFFICE OF REGULATION SERVICES
APP. # 03-105719
DATE 6-4-04

agency

SAN RAMON VALLEY CENTER

CONTRA COSTA COMMUNITY COLLEGE DISTRICT

SAN RAMON, CALIFORNIA

owner

tBP project number : 20212.00

file name:

drawn by: DW checked by: SA

date: 03-04-04 plot scale: 1:1

Rev:	date:	description:
1	05-26-04	DESIGN CLARIFICATIONS

drawing title: MECHANICAL/PLUMBING - SITE PLAN

building no.:

drawing no.: MP1.0

drawing of

\\2002-2\BIDNEW\P1.0.dwg Time: Jun/03/2004-04:46pm

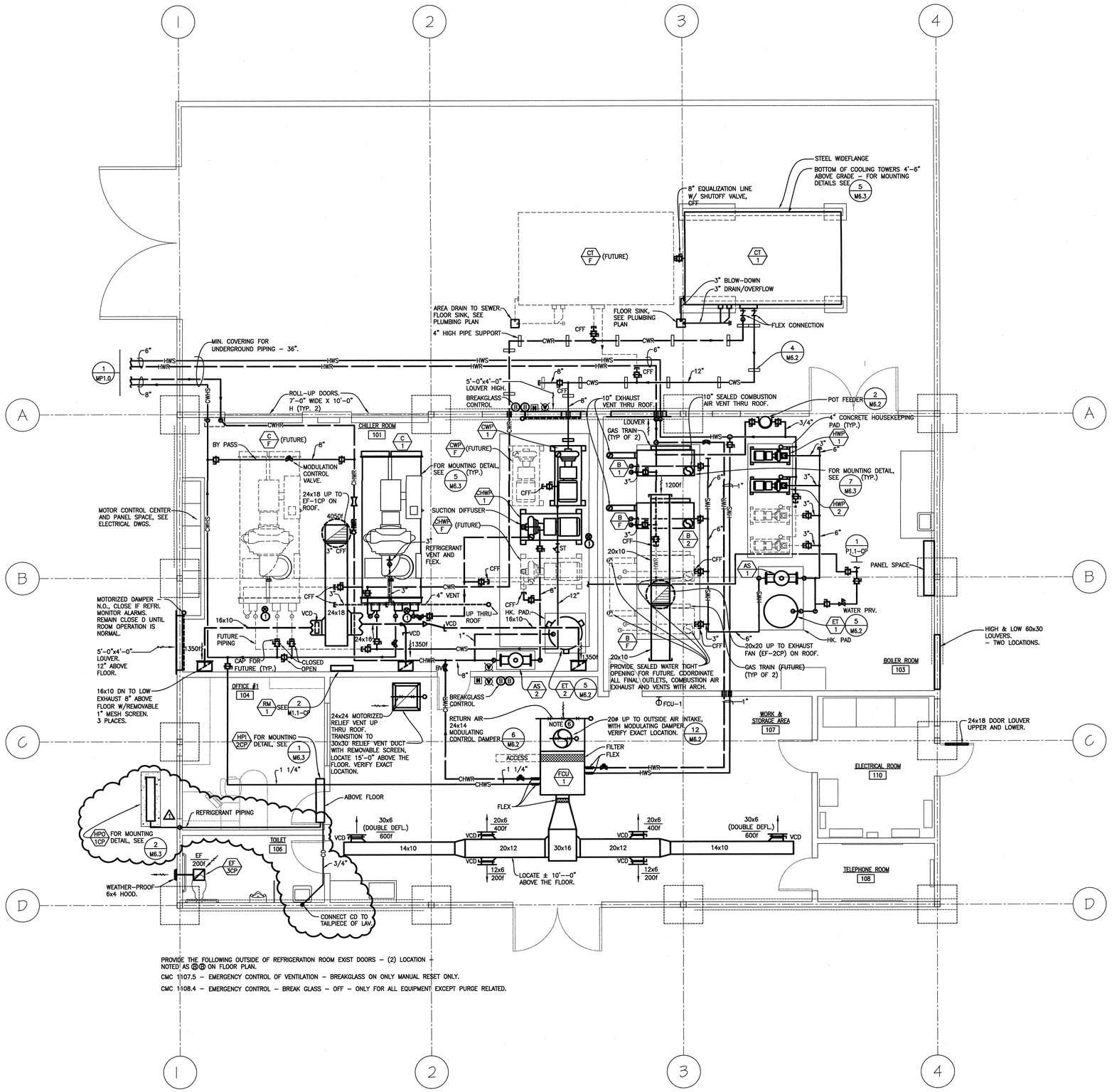

PROVIDE THE FOLLOWING OUTSIDE OF REFRIGERATION ROOM EXIST DOORS - (2) LOCATION - NOTED AS (B)(B) ON FLOOR PLAN.

CMC 1107.5 - EMERGENCY CONTROL OF VENTILATION - BREAKGLASS ON ONLY MANUAL RESET ONLY.

CMC 1108.4 - EMERGENCY CONTROL - BREAK GLASS - OFF - ONLY FOR ALL EQUIPMENT EXCEPT PURGE RELATED.

MECHANICAL - CENTRAL PLANT FLOOR PLAN

SCALE: 1/4"=1'-0"

1/M1.1-CP

GENERAL NOTES

1. ⊗ LOW REFRIGERANT SENSOR IN METAL CONDUIT 8" ABOVE FLOOR.
2. SUPPORT ALL PIPING INDEPENDENT OF EQUIPMENT CONNECTION. NO PIPE WEIGHT ALLOWED ON PUMP VOLUTE FLANGES OR BOILER FITTINGS SUPPORT FLUE PIPE AND COMBUSTION AIR PIPE INDEPENDENT OF BOILERS.
3. PUMPS ARE TO BE INSTALLED ACCORDING TO MANUFACTURERS' INSTRUCTIONS. SET PUMP'S LEVEL. INSTALL ANCHOR BOLTS TO FIT PUMP BASE (VERTICAL). ALIGN PUMP AND MOTOR SHAFTS, WHEN COMPLETE, RECHECK ALIGNMENT THEN GROUT IN BASE-PLATE ENCASING THE LEVELING SHIMS OR WEDGES. RETIGHTEN FOUNDATION BOLTS AFTER GROUT IS HARD. (48 HRS. MIN.)
4. PROVIDE REMOVABLE 1"x1" METAL MESH SCREEN - 2 LOCATIONS - 1200 CFM EACH.
5. EXHAUST FAN ON WITH ROOM IS ABOVE 90°F (ADJUSTABLE).
6. MODULATE OSA, RAE AND RELIEF DAMPERS TO MAINTAIN SET POINT ON CALL FOR ADDITIONAL COOLING 60% TO 25% OSA MIN. AND MODULATE 2-WAY CONTROL VALVE. ON HEATING, CO TO MIN. OSA AND MODULATE 2-WAY HEATING WATER CONTROL VALVES, COOLING VALVE IS CLOSED. OPERATE FROM LOCAL AND OR BUILDING MANAGEMENT SYSTEM.
7. PROVIDE THE FOLLOWING OUTSIDE OF REFRIGERATION ROOM EXIT DOORS - (2) LOCATIONS NOTED AS (B)(B) ON FLOOR PLANS.
8. CMC 1107.5 - EMERGENCY CONTROL OF VENTILATION - BREAK GLASS ON ONLY MANUAL RESET ONLY.
9. CMC 1108.4 - EMERGENCY CONTROL - BREAK GLASS - OFF - ONLY FOR ALL EQUIPMENT EXCEPT PURGE RELATED..

REFRIGERATION NOTES

1. REFRIGERATION SYSTEMS SHALL BE ACCESSIBLE TO THE FIRE DEPARTMENT AT ALL TIMES.
2. CONTROL BOXES SHALL BE LOCATED OUTSIDE OF THE BUILDING ADJACENT TO A STREET OR AT AN APPROVED ACCESSIBLE LOCATION. ALL PORTIONS OF THE CONTROL BOX SHALL BE 6 FEET OR LESS ABOVE THE ADJOINING GRADE.
3. VALVES AND SWITCHES SHALL BE ADEQUATELY IDENTIFIED AS TO THE SEQUENTIAL PROCEDURE TO BE FOLLOWED IN THE EVENT OF AN EMERGENCY.
4. CONTROL BOXES SHALL BE OF IRON OR STEEL NOT LESS THAN 16 GAGES THICKNESS AND PROVIDED WITH A HINGED COVER AND LOCK.
5. CONTROL BOXES SHALL BE PROVIDED WITH A PERMANENT LABEL ON THE OUTSIDE COVER READING "FIRE DEPARTMENT - EMERGENCY CONTROL BOX" AND INCLUDING THE NAME OF THE RETIREMENT IN THE SYSTEM HAZARD IDENTIFICATION IN ACCORDANCE WITH UFC STANDARD 79-3 SHALL BE POSTED INSIDE AND OUTSIDE OF THE CONTROL BOX.
6. EQUIPMENT, PIPING, DUCTS, VENTS OR SIMILAR DEVICES WHICH ARE NOT ESSENTIAL FOR THE REFRIGERATION PROCESS, MAINTENANCE OF THE EQUIPMENT OR ILLUMINATION, VENTILATION OR FIRE PROTECTION OF THE ROOM SHALL NOT BE PLACED IN OR PASS THROUGH A REFRIGERATION MACHINERY ROOM.

REFRIGERATION AUDIO/VISUAL WARNING DEVICES

[H] AUDIBLE DEVICE HORN
CROUSE HINDS #ETH2313, 24V

[V] VISUAL DEVICE
CROUSE HINDS #VDAS, BLUE, 24V.

NOTE: FOR WIRING OF THESE DEVICES, SEE DIAGRAM 2/M1.1-CP

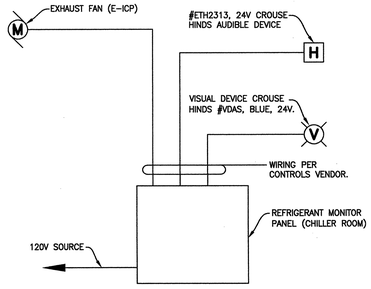

MECHANICAL - REFRIGERANT MONITOR SYSTEM DIAGRAM

NO SCALE

2/M1.1-CP

tBP
architecture
planning
interiors
management
tBP/Architecture
1000 Burnett Ave, Suite 140
Concord, CA 94520
ph: 925.246.6419 fx: 925.246.6495
architect
AINSWORTH ASSOCIATES
MECHANICAL ENGINEERS
SACRAMENTO, CA
consultant

APPROVED
DIVISION OF THE STATE ARCHITECT
OFFICE OF REGIONAL PROJECTS
APPL NO. 10219
DATE 6-9-04

agency

SAN RAMON VALLEY CENTER
CONTRA COSTA COMMUNITY COLLEGE DISTRICT
SAN RAMON, CALIFORNIA

owner

tBP project number: 2021.00
file name:
drawn by: DM checked by: SA
date: 03-01-04 plot scale: 1:1

Rev:	date:	description:
1	05-26-04	DESIGN CLARIFICATIONS

drawing title: MECHANICAL - CENTRAL PLANT
building no.:
drawing no.: M1.1-CP
drawing of

I:\2002-03\01DWG\M-1-cp.dwg Tmbs: Jun/03/2004-04:04pm

AIR HANDLING UNIT SCHEDULE

SYMBOL	MANUFACTURER MODEL & SIZE	FAN DATA						COOLING COIL DATA											HEATING COIL DATA									FILTERS		MIN. O.A. CFM	UNIT DIMENSIONS L"xW"xH"	UNIT WEIGHT LBS.
		CFM	SA TOTAL S.P. IN. W.C.	RA TOTAL S.P. IN. W.C.	MOTOR DATA H.P.	VOLT	PHASE	CFM	EADB	EAWB	LADB	LAWB	EWT	LWT	GPM AVAILABLE	MIN. FACE AREA FT²	MIN. ROWS	MAX. AIR P.D. IN. W.C.	MAX. WATER P.D. FT. W.C.	CFM	EADB	LADB	EWT	LWT	GPM AVAIL	MIN. FACE AREA FT²	MIN. ROWS	MAX. APD IN. W.C.	MAX. WPD FT. W.C.	AREA FT²	FILTER SECTION TYPE			
AHU 1	ENERGY LABS CUSTOM AIR HANDLING UNIT	26,225	4.25	1.5	SUPPLY 25 / RETURN 295	460	3	26,225	80.7	64.15	52	51	43	56	154	58.3	6	0.7	8	26,225	50	60	180	140	14	58.3	1	0.15	8	59	PRE-FILTER & 1"-30 % CARTRIDGE	7,625	301"x126"x84"	14,600
AHU 2	ENERGY LABS CUSTOM AIR HANDLING UNIT	9,000	4.25	NA	SUPPLY 10 / RETURN NA	460	3	9,000	94	98	52	51	43	56	70	20.0	6	0.7	8	9,100	29	60	180	140	15	20	1	0.15	8	20	PRE-FILTER & 1"-30 % CARTRIDGE	100% OA	155"x66"x66"	5,000
AHU 3	ENERGY LABS CUSTOM AIR HANDLING UNIT	10,650	4.25	1.5	SUPPLY 15 / RETURN 5	460	3	10,650	80.7	64.15	52	51	43	56	58	23.7	6	0.7	8	10,650	50	60	180	140	6	23.7	1	0.15	8	24	PRE-FILTER & 1"-30 % CARTRIDGE	2,600	275"x78"x72"	7,800
AHU 4	ENERGY LABS CUSTOM AIR HANDLING UNIT	14,625	4.25	1.5	SUPPLY 20 / RETURN 7.5	460	3	14,625	80.7	64.15	52	51	43	56	86	32.5	6	0.7	8	14,625	50	60	180	140	8	32.5	1	0.15	8	53	PRE-FILTER & 1"-30 % CARTRIDGE	5,250	284"x90"x72"	10,750
AHU 5	ENERGY LABS CUSTOM AIR HANDLING UNIT	9,800	4.25	1.5	SUPPLY 10 / RETURN 5	460	3	9,800	80.7	64.15	52	51	43	56	68	22	6	0.7	8	9,800	50	60	180	140	5.5	22	1	0.15	8	22	PRE-FILTER & 1"-30 % CARTRIDGE	3,000	263"x66"x64"	8,500
AHU 6	ENERGY LABS CUSTOM AIR HANDLING UNIT	12,150	4.25	1.5	SUPPLY 15 / RETURN 5	460	3	12,150	80.7	64.15	52	51	43	56	68	27	6	0.7	8	12,150	50	60	180	140	XXX	27	1	0.15	8	27	PRE-FILTER & 1"-30 % CARTRIDGE	2,300	268"x78"x66"	9,200

NOTES:
1. UNITS SHALL CONTAIN THE FOLLOWING: RA PLENUM INLET, RA FAN, ECONOMIZER, 30% FILTERS, HW HEATING AND COOLING WATER COILS, SA FAN W/ DISCHARGE PLENUM. UNITS SHALL HAVE BUILT IN CONTROLS AND VFD CABINETS.
2. EACH UNIT SHALL BE WIRED FOR A SINGLE 120V/1ø/60Hz. POINT OF CONNECTION AND A SINGLE 460V/3ø/60Hz CONNECTION. UNITS SHALL BE PROVIDED WITH A ELECTRICAL CONVENIENCE OUTLET AND A 120V POWER CONNECTION WITHIN CONTROLS CABINET.
3. ALL COILS SHALL BE COPPER TUBE / ALUMIMUM FIN.
4. PROVIDE SMOKE DETECTOR WITHIN SUPPLY AIR DUCT FOR AUTOMATIC SMOKE SHUTDOWN.

HOT WATER REHEAT COIL SCHEDULE

SYMBOL	MANUFACTURER & MODEL	CFM	MIN. ROW/ FPI	EAT °F	LAT °F	MINIMUM CAPACITY (MBH)	GPM	WPD (FT.)	EWT °F	EWT °F	MAXIMUM AIR P.D. IN. WC.	BRANCH PIPE HWS	BRANCH PIPE HWR	TCV. SIZE	TCV. CV.	MAXIMUM COIL WEIGHTS	
RHC 1-1	TEMPTROL MODEL Z-8-A-2-B-18-21	1,650	2/8	55	93	67.9	3.1	1.3	180	135	0.23	1"	1"	1/2"	1.9	40	
RHC 2-1	TEMPTROL MODEL Z-8-A-2-B-18-21	1,650	2/8	55	93	67.9	3.1	1.3	180	135	0.23	1"	1"	1/2"	1.9	40	
RHC 3-1	TEMPTROL MODEL Z-8-A-2-B-18-24	1,945	2/8	55	95	84.3	4.5	2.7	180	141	0.25	1"	1"	1/2"	3.0	40	
RHC 4-1	TEMPTROL MODEL Z-8-A-2-B-18-24	2,000	2/8	55	95	84.3	4.6	2.8	180	142	0.26	1"	1"	1/2"	3.0	40	
RHC 4-2	TEMPTROL MODEL Z-8ZA-2-G-18-33	2,600	2/8	55	92	105.5	6.0	0.9	180	144	0.23	1"	1"	1/2"	3.0	40	
RHC 4-3	TEMPTROL MODEL Z-8ZA-2-G-18-33	2,600	2/8	55	92	105.5	6.0	0.9	180	144	0.23	1"	1"	1/2"	3.0	40	
RHC 5-1	TEMPTROL MODEL Z-8-A-2-B-18-24	2,000	2/8	55	95	84.3	4.6	2.8	180	142	0.26	1"	1"	1/2"	3.0	40	
RHC 6-1	TEMPTROL MODEL Z-8-A-2-B-18-24	225	2/8	55	95	9.6	0.50	0.1	180	140	0.13	3/4"	3/4"	1/2"	0.8	40	

NOTES:
1. ALL COILS SHALL BE A.R.I. CERTIFIED, RATED IN ACCORDANCE WITH A.R.I. STANDARD 410.
2. ALL REHEAT COILS SHALL BE PROVIDED WITH 2-WAY CONTROL VALVES.
3. PROVIDE WITH FLANGED CONNECTION FOR DUCTWORK.

PUMP SCHEDULE

SYMBOL	MANUFACTURER MODEL & SIZE	SERVICE AND LOCATION	GPM	MIN. EFF. %	HD (FT.)	DESIGN TEMP °F	BHP	MOTOR DATA HP	VOLT	PHASE	RPM	WEIGHT LBS.	REMARKS
CHWP P1	B&G MODEL 1510 4GB	CHILLED WATER PHASE 1	430	79	120	40	17.58	40	460	3	1750	530	VFD
CWP P1	B&G MODEL 1510 5BC	CONDENSER WATER PHASE 1	600	83	40	100	8.25	25	460	3	1750	660	
HWP 1	B&G MODEL 1510 1 1/2 AC	HEATING HOT WATER PHASE 1	95	59	130	180	5.16	10	460	3	3500	300	VFD
HWP 2	B&G MODEL 1510 1 1/2 AC	HEATING HOT WATER PHASE 1	95	59	130	180	5.16	10	460	3	3500	300	VFD
HWR P1	B&G MODEL 80	DOMESTIC HOT WATER RETURN (PHASE 1)	25	–	40	120	–	5	460	3	1750	–	

NOTES:
1. BELL AND GOSSETT 1510 USED AS BASIS OF DESIGN.
2. CWP TYPICAL, LOCATE STRAINERS ON PUMP DISCHARGE BEFORE CHECK VALVE.

EXHAUST FAN SCHEDULE

SYMBOL	MANUFACTURER AND MODEL	CAPACITY CFM	CAPACITY ESP "WC	ELECTRICAL BHP	ELECTRICAL RPM	ELECTRICAL HP	ELECTRICAL VOLTS	ELECTRICAL PH.	UNIT WEIGHT (LBS.)	AREA SERVE	NOTES
EF 1CP	GREENHECK CUBE HP 200	4,400	1.5	2.37	1750	3	460	3	460	CHILLER ROOM	UP-BLAST, VFD, STANDARD CURB.
EF 2CP	GREENHECK GB 161	2,400	1.0	0.65	1750	1.0	460	3	300	BOILER ROOM	BACKDRAFT DAMPERS
EF 3CP	BROAN 362 M.G.	200	–	1.3 AMPS	1750	1.3 AMPS	120	1	25	CENTRAL PLANT TOILET	
EF 1	GREENHECK TCP-1-18	2,600	1.0	0.80	1,074	1	460	3	445	1ST & 2ND FLOOR –WEST– (GANG) RESTROOMS	
EF 2	GREENHECK BCF-106	350	1.0	0.11	1,979	1/4	115	1	80	2ND FLOOR (UNISEX) RESTROOMS	
EF 3	GREENHECK TCP-1-18-20	4,400	1.0	1.85	1,408	2	460	3	445	ART & CERAMIC STUDIOS	
EF 4	GREENHECK TCB-2-22-30	5,500	1.25	2.35	1,215	3	460	3	659	1ST FLOOR (GANG) RESTROOMS & PHYSICAL EDUCATION	
EF 5	STROBIC AIR CORP. TS2S150C12	9,100	3.5	11.3	1,170	15	460	3	–	LAB HOOD EXHAUST FAN	PROVIDE W/ TRI-STACK & INLET PLENUM

NOTES:
1. TRANSITION INLET/DISCHARGE BRANCH DUCT TO EXHAUST FANS TO FAN INLET/DISCHARGE SIZE.
2. PROVIDE ROOF CURBS WHEN REQUIRED.

COOLING TOWERS SCHEDULE

TAG	MANUFACTURER & MODEL	EWT	LWT	GPM	EWB	FAN* HP	ELEC DATA VOLTS	ELEC DATA HZ.	ELEC DATA PH.	WEIGHT LBS.	PUMPS SERVED	REMARKS
CT 1CP	EVAPCO 350 TON AT 19 414	90	80	600	70	15	460	60	3	10500	CWP 1CP	STAINLESS STEEL BASIN TOWER VFD
CT F	EVAPCO 350 TON AT 19 414	90	80	960	70	15	460	60	3	10500	–	FUTURE TOWER, NIMC

NOTES:
1. PROVIDE WITH ELECTRIC MAKE-UP WATER CONTROL AND WATER METER ON MAKEUP.
2. PROVIDE WITH VARIABLE FREQUENCY DRIVE FAN.
3. PROVIDE WATER METER AT BLOW-DOWN DRAIN
4. PROVIDE WITH ACCESS LADDER AT UPPER LEVELS.

EXPANSION TANK SCHEDULE

SYM-BOL	MANUFACTURER, MODEL & SIZE	SERVICE	TANK TOTAL VOLUME GALLON	OVERALL TANK SIZE	TANK FITTING	TOTAL WEIGHT WITH WATER LBS.	LOCATION
ET 1	WESSEL SIZE FXA 800	CHILLED WATER	211	36"ø x 63"H	2"	2,400	CHILLER RM
ET 2	WESSEL SIZE FXA 800	HEATING WATER	211	36"ø x 63"H	2"	2,400	BOILER ROOM

NOTES: 1. SEE SPECIFICATIONS FOR ADDITIONAL REQUIREMENTS.

HOT WATER BOILER SCHEDULE

SYMBOL	MANUFACTURER MODEL & SIZE	LOCATION	NATURAL GAS CFH	MBH OUTPUT	WATER TEMP GPM	WATER TEMP IN	WATER TEMP OUT	OPERATING WEIGHT LBS.	REMARKS
B 1	AERCO MODEL BMK 2.0	BOILER ROOM	2,000	1,720	95	140	180	2,000	
B 2	AERCO MODEL BMK 2.0	BOILER ROOM	2,000	1,720	95	140	180	2,000	
B F	AERCO MODEL BMK 2.0	BOILER ROOM	2,000	1,720	95	140	180	2,000	FUTURE, NIMC
B F	AERCO MODEL BMK 2.0	BOILER ROOM	2,000	1,720	95	140	180	2,000	FUTURE, NIMC

NOTES:
1. PROVIDE WITH AERCO BOILER MANAGEMENT SYSTEM
2. SINGLE POINT CONNECTION
3. AERCO BENCHMARK – BASIS OF DESIGN
4. ALLOW FOR TWO FUTURE BOILERS
5. BOILER INCLUDES SEALED CONBUSTION AND EXHAUST FLUE.

CHILLER SCHEDULE

SYMBOL	TONS	KW/TON	EVAPORATOR GPM	EVAPORATOR ENT °F	EVAPORATOR LVE °F	EVAPORATOR MAX PD. FT.	EVAPORATOR FOUL FACTOR	EVAPORATOR PASSES	CONDENSER GPM	CONDENSER ENT °F	CONDENSER LVE °F	CONDENSER MAX PD. FT.	CONDENSER FOUL FACTOR	CONDENSER PASSES	MOTOR KW	MOTOR VOLT	MOTOR PH	MOTOR RPM	OPERATING WEIGHT (LBS.)	L R A	F L A	REFRI 123 LBS.	MIN. CIRCUIT AMPACITY
C 1CP	300	0.553	450	56	42	5.5	0.00010	2	600	80	90	17.4	0.00025	2	189	460	3	–	16,605	2590	263	890	330
C F	345	0.553	595	56	42	20	0.00010	2	960	80	90	17.4	0.00025	2	189	460	3	–	16,605	2590	263	890	330

NOTES:
1. "YORK" MODEL YTG1A4E1-CNJ, YT MAXE CHILLER USED AS BASIS OF DESIGN, VFD CHILLER PIPED IN SERIES.

EQUIPMENT LIST

AC 7 / CU 7	SPLIT SYSTEM AC UNIT: INDOOR UNIT: "TRANE" SPLIT SYSTEM COOLING ONLY AIR HANDLING UNIT MODEL TWE-120-A-4-00-C-A 4,000 CFM, 2 HP FAN MOTOR 460V/3ø/60HZ, 10 TON TOTAL COOLING. UNIT SHALL BE HORIZONTAL MOUNTED WITH VERTICAL BOTTOM RETURN AND HORIZONTAL END DISCHARGE. PROVIDE WITH PROGRAMMABLE NIGHT SETBACK THERMOSTAT, VIBRATION ISOLATOR KIT, AND TWO-INCH FILTER RACK. APPROXIMATE WEIGHT = 400 LBS. OUTDOOR CONDENSING UNIT: "TRANE" MODEL TTA-120-B-4-00-B-A AT 10 TONS COOLING CAPACITY AT ARI CONDITIONS. UNIT SHALL OPERATE AT 460V/3ø/60HZ. PROVIDE WITH DUAL COMPRESSOR, TIME DELAY RELAY, ANTI-SHORT-CYCLE TIMER, HOT GAS BYPASS KIT, VIBRATION ISOLATION PACKAGES, AND CONDENSER COIL GUARD. APPROXIMATE WEIGHT = 450 LBS.
ACI 1 / ACO 1; ACI 2 / ACO 2; ACI 3 / ACO 3; ACI 4 / ACO 4	"MITSUBISHI" DUCTLESS SPLIT-TYPE AIR CONDITIONER MS24WN/MU24WN HAVING A COOLING CAPICITY OF 22,800 BTUH AT ARI CONDITIONS. MINIMUM DRY COIL AIR FLOW AT LOW-MEDIUM-HIGH SPEEDS SHALL BE 431-491-565 CFM. MINIMUM EER/SEER IS 10.5 AND MAXIMUM POWER CONSUMPTION IS 2,170W AT ARI CONDITIONS. 115V,/ 1ø/ 60Hz POWER SUPPLY TO INDOOR AND 208/230V,/ 1ø/ 60Hz POWER SUPPLY TO OUTDOOR UNIT. PROVIDE MANUFACTURER'S REFRIGERANT PIPE PACKAGE. APPROXIMATE WEIGHT = 40 LBS. (INDOOR) AND 152 LBS. (OUTDOOR).
CU 1 / AC 1	"TRANE" SPLIT SYSTEM COOLING ONLY AIR HANDLING UNIT MODEL LPC-A-A-25-F AT 12,000 CFM, 5 HP FAN MOTOR 460V/3ø/60HZ, 30 TON TOTAL COOLING. PROVIDE WITH DUAL COMPRESSORS AND PROGRAMMABLE NIGHT SETBACK THERMOSTAT. SET MINIMUM OUTSIDE AIRFLOW AT 1800 CFM. APPROXIMATE WEIGHT = 1,500 LBS.
AS 1	AIR SEPARATOR: (HEATING HOT WATER SYSTEM) "SPIROVENT" MODEL HV HIGH VELOCITY MICROBUBBLE SPARATOR. UNIT SHALL BE 6". APPROXIMATE UNIT WEIGHT = 190 LBS.
AS 2	AIR SEPARATOR: (CHILLED WATER SYSTEM) "SPIROVENT" MODEL HV HIGH VELOCITY MICROBUBBLE SPARATOR. UNIT SHALL BE 8". APPROXIMATE UNIT WEIGHT = 335 LBS.
FCU 1	TRANE FAN COIL UNIT – SIZE 72. PROVIDE COMPLETE WITH CONTROLS TRANE BLOWER COIL AIR HANDLER WITH 1 ROW HEATING COIL 78 MB, 46 PM, 0.15" APD COOLING COIL, 6 ROW, 73 MBH, 126 PM, 0.60" APD, FARR 30/30 FILTERS 400 RPM MAX, BLOWER, 2.5", 3 HP, 460V-3ø. MAX. OPERATING WEIGHT = 300 LBS.
RM 1	REFRIGERANT MONITOR: PROVIDE REFRIGERANT GAS LEAK MONITOR COMPLETE WITH AUXILIARY REMOTE HORN AND REMOTE STROBE. MONITOR TO BE YOKOGAWA MODEL HGM300 OR EQUAL. MONITOR SHALL BE REFRIGERANT SPECIFIC, SINGLE GAS SENSING, R-123 REFRIGERANT TYPE, HUMAN INTERFACE, WALL MOUNTED. IN ADDITION TO THE SPECIFICATION PROVIDE AND DO THE FOLLOWING: VERIFY REFRIGERATION MACHINERY ROOM AMBIENT SOUND LEVELS AND PROVIDE ALARM SIGNALING DEVICES WITH 15 dBA OR MORE ABOVE OPERATING AMBIENT.
ACI 5 / ACO 5; ACI 6 / ACO 6	"MITSUBISHI" DUCTLESS SPLIT-TYPE AIR CONDITIONER MS12TN/MU12TN HAVING A COOLING CAPICITY OF 12,600 BTUH AT ARI CONDITIONS. MINIMUM DRY COIL AIR FLOW AT LOW-MEDIUM-HIGH SPEEDS SHALL BE 360-395-452 CFM. MINIMUM EER/SEER IS 11.2. INDOOR UNIT – 115V/1ø/60Hz. OUTDOOR UNIT – 208V/1ø/60Hz. PROVIDE MANUFACTURER'S REFRIGERANT PIPE PACKAGE. APPROXIMATE WEIGHT = 31 LBS. (INDOOR) AND 84 LBS. (OUTDOOR).
HPI 1CP / HPO 1CP	"MITSUBISHI" DUCTLESS SPLIT-TYPE HEAT PUMP MSH12TN/MU12TN HAVING A COOLING CAPICITY OF 12,600 BTUH AND 13,500 BTUH HEATING CAPACITY AT ARI CONDITIONS. MINIMUM DRY COIL AIR FLOW AT LOW-MEDIUM-HIGH SPEEDS SHALL BE 360-395-452 CFM. MINIMUM EER/SEER IS 9.8/10.2 AND H.S.P.F/C.O.P OF 6.8/3.17. INDOOR UNIT – 115V/1ø/60Hz. OUTDOOR UNIT – 208V/1ø/60Hz. PROVIDE MANUFACTURER'S REFRIGERANT PIPE PACKAGE. APPROXIMATE WEIGHT = 31 LBS. (INDOOR) AND 84 LBS. (OUTDOOR).

AIR CONDITIONING LEGEND

RETURN	RETURN OR EXHAUST AIR DUCT
SUPPLY	SUPPLY AIR DUCT
HEX	LAB HOOD EXHAUST VALVE (PHOENIX CONTROLS)
GEX	LAB GENERAL EXHAUST VALVE (PHOENIX CONTROLS)
SUP	LAB SUPPLY AIR VALVE (PHOENIX CONTROLS)
CHWS	CHILLED WATER SUPPLY PIPE
CHWR	CHILLED WATER RETURN PIPE
HWS	HEATING HOT WATER SUPPLY PIPE
HWR	HEATING HOT WATER RETURN PIPE
FLEX	FLEXIBLE CONNECTION
GV.	GATE VALVE
BV.	BALANCE VALVE
CKV.	CHECK VALVE
LH.GC.	LEVER HANDLE GAS COCK
Ø	THERMOMETER, PRESSURE GAUGE
	OUTSIDE AIR INTO LOUVER
	RETURN OR EXHAUST AIR INTO REGISTER
	SUPPLY AIR FROM REGISTER
	OUTSIDE AIR DUCT SECTION
	RETURN OR EXHAUST AIR DUCT SECTION
	SUPPLY AIR DUCT SECTION
12 x 10	DUCT (FIRST FIGURE SIDE SHOWN SECOND FIGURE SIDE NOT SHOWN)
	TURNING VANES
	FLEXIBLE DUCTWORK
S VCD VCD	VOLUME CONTROL DAMPER
R D	RISE OR DROP IN DIRECTION OF ARROW
TH	ROOM THERMOSTAT
Ø	DIAMETER
H	HUMIDIFIER
H	HUMIDISTAT
ROOMNAME --	ROOM NAME & NUMBER
AC	AIR CONDITIONING
AD, AP	ACCESS DOOR, ACCESS PANEL
CC	CENTER TO CENTER
CFM,f	CUBIC FEET OF AIR PER MINUTE
CFF	CAP FOR FUTURE
E	EXTRACTOR
(E), (N)	EXISTING, NEW
EAD ,OAD ,RAD	EXHAUST AIR, OUTSIDE AIR, & RETURN AIR DAMPER
EF	EXHAUST FAN
°F	DEGREES FAHRENHEIT
FD / CFSD	FIRE DAMPER / COMBINATION FIRE SMOKE DAMPER
GA.	GAUGE
GALV.	GALVANIZED
AAV. / MAV.	AUTOMATIC / MANUAL AIR VENT
MAX., MIN.	MAXIMUM, MINIMUM
M.D.	MANUAL DAMPER
P.D.	PITCH DOWN IN DIRECTION OF ARROW
PRV.	PRESSURE REDUCING VALVE
RA, EA.	RETURN AIR, EXHAUST AIR
RD.	ROOF DRAIN
SA, OA.	SUPPLY AIR, OUTSIDE AIR
T.C.V.	TEMPERATURE CONTROL VALVE
T.C.P.	TEMPERATURE CONTROL PANEL
TYP.	TYPICAL
VFD	VARIABLE FREQUENCY DRIVE
NA	NOT APPLICABLE
CFF	CAP FOR FUTURE

GENERAL NOTES

1. BRANCH DUCT SIZES TO INDIVIDUAL VAV BOXES SHALL BE THE INLET SIZE OF THE BOX UNLESS NOTED OTHERWISE.
2. PAINT ALL EXPOSED DUCTWORK, COLOR AS SELECTED BY ARCHITECT. DO NOT PAINT EXTERNALLY INSULATED DUCT SYSTEMS.
3. HYDRONIC HOT WATER PIPING TO INDIVIDUAL VAV BOXES SHALL BE 3/4" UNLESS NOTED OTHERWISE.
4. PROVIDE FIRE STOPPING ASSEMBLY PROTECTION FOR DUCT AND PIPE PENETRATIONS OF RATED ASSEMBLIES. FIRE STOP RATING SHALL MATCH RATED ASSEMBLY BEING PENETRATED.
5. BUILDING SHALL BE PROVIDED WITH A ANDOVER BUILDING AUTOMATION SYSTEM.
6. ALL SUSPENDED PIPING AND DUCTWORK SHALL BE SUPPORTED PER SMACNA GUIDELINES. PROVIDED WITH, SEISMIC SWAY BRACES IN ACCORDANCE WITH THE SMACNA GUIDELINES FOR SUSPENDED PIPING AND DUCTWORK.
7. ALL FUTURE EQUIPMENT IS INDICATED FOR REFERENCE ONLY AND IS NIMC.

SOUND TRAP SCHEDULE

SYMBOL	MANUFACTURER MODEL & SIZE	DIMENSIONS	MAX. P.D. IN. W.C.		MAX DUCT LOSS Db (@ +2000 FPM) 2ND	3RD	4TH	5TH	6TH	7TH	APPROXIMATE WEIGHT (LBS.)	REMARKS / NOTES
ST 1S	IAC MODEL CL SIZE – 36"ø	36"ø x 72" LONG	≤0.10	12,335	14	19	35	36	31	23	530	TRANSITION DUCTS TO SOUND TRAP SIZE AS REQUIRED.
ST 1R	IAC MODEL LFm SIZE – 42x24	42"x24"x36" LONG	0.50	12,335	7	15	18	17	12	10	89	TRANSITION DUCTS TO SOUND TRAP SIZE AS REQUIRED.
ST 4R	IAC MODEL LFm SIZE – (2) 30x24	30"x24"x36" LONG	0.20	7,320	7	12	15	15	10	9	136	DUCT = 60x24, PROVIDE TWO 30x24 SOUND TRAPS
ST 5S	IAC MODEL CL SIZE – 32"ø	32"ø x 64" LONG	≤0.10	12,335	14	19	35	36	31	23	530	
ST 5R	IAC MODEL LFm SIZE – 24x36	24"x36"x36" LONG	0.16	8,750	7	12	15	15	10	9	75	TRANSITION DUCTS TO SOUND TRAP SIZE AS REQUIRED.

tBP architecture planning interiors management
tBP/Architecture
1000 Burnett Ave, Suite 140
Concord, CA 94520
ph: 925.246.6419 fx: 925.246.6495
architect
AINSWORTH ASSOCIATES
MECHANICAL ENGINEERS
SACRAMENTO, CA
JOB: 2002-2286
consultant

APPROVED
OFFICE OF THE STATE ARCHITECT
OFFICE OF REGULATION SERVICES
APPL. NO. 05715
REVIEWED FOR CODE COMPLIANCE
DATE

agency

SAN RAMON VALLEY CENTER
CONTRA COSTA COMMUNITY COLLEGE DISTRICT
SAN RAMON, CALIFORNIA

owner

tBP project number : 20212.00
file name:
drawn by: DW checked by: SA
date: 03-09-04 plot scale: 1:1

Rev:	date:	description:
1	05-26-04	DESIGN CLARIFICATIONS

drawing title: MECHANICAL - LEGEND, SCHEDULES, AND NOTES
building no:
drawing no: M0.1
drawing of

I:\2002\02286\04\M0.1.dwg Tue, Jun 22, 2004 - 02:59pm

VARIABLE AIR VOLUME BOX SCHEDULE

SYMBOL	MANUFACTURER AND MODEL	MAX. CFM	MIN. CFM	AIR S.P. LOSS (MAX.)	REHEAT COIL DATA											NOTES
								AIR		WATER				TCV		
					CFM	ROWS	MBH	EAT	LAT	GPM	EWT	LWT	PD. FT.	SIZE	CV	
VAV 1-1	TITUS MODEL DESV SIZE 14	1750	875	0.40	875	1	40.6	55	98	2.0	180	140	3	1/2"	1.2	
VAV 1-2	TITUS MODEL DESV SIZE 12	1600	800	0.40	800	1	37.2	55	98	1.8	180	140	3	1/2"	1.2	
VAV 1-3	TITUS MODEL DESV SIZE 12	1500	750	0.40	750	1	34.8	55	98	1.8	180	140	3	1/2"	1.2	
VAV 1-4	TITUS MODEL DESV SIZE 12	1200	600	0.40	600	1	27.9	55	98	1.4	180	140	3	1/2"	0.8	
VAV 1-5	TITUS MODEL DESV SIZE 10	1000	500	0.40	500	1	23.2	55	98	1.2	180	140	3	1/2"	0.8	
VAV 1-6	TITUS MODEL DESV SIZE 10	2100	1050	0.40	1100	1	51.1	55	98	2.6	180	140	3	1/2"	1.2	
VAV 1-7	TITUS MODEL DESV SIZE 14	2500	1250	0.40	1250	1	58.1	55	98	2.9	180	140	3	1/2"	1.9	
VAV 1-8	TITUS MODEL DESV SIZE 12	1200	600	0.40	600	1	27.9	55	98	1.4	180	140	3	1/2"	0.8	
VAV 1-9	TITUS MODEL DESV SIZE 12	1200	600	0.40	600	1	27.9	55	98	1.4	180	140	3	1/2"	0.8	
VAV 1-10	TITUS MODEL DESV SIZE 14	2075	1037	0.40	1037	1	48.2	55	98	2.4	180	140	3	1/2"	1.2	
VAV 1-11	TITUS MODEL DESV SIZE 12	1275	637	0.40	637	1	29.6	55	98	1.5	180	140	3	1/2"	0.8	
VAV 1-12	TITUS MODEL DESV SIZE 4	125	62	0.40	62	1	2.9	55	98	0.2	180	140	3	1/2"	0.8	
VAV 1-13	TITUS MODEL DESV SIZE 12	1650	825	0.40	825	1	38.3	55	98	1.9	180	140	3	1/2"	1.2	
VAV 1-14	TITUS MODEL DESV SIZE 14	1850	925	0.40	925	1	43.0	55	98	2.2	180	140	3	1/2"	1.2	
VAV 1-15	TITUS MODEL DESV SIZE 7	450	225	0.40	225	1	10.4	55	98	0.5	180	140	3	1/2"	0.8	
VAV 1-16	TITUS MODEL DESV SIZE 14	2350	1175	0.40	1175	1	54.6	55	98	2.7	180	140	3	1/2"	1.9	
VAV 1-17	TITUS MODEL DESV SIZE 14	2350	1175	0.40	1175	1	54.6	55	98	2.7	180	140	3	1/2"	1.9	
VAV 3-1	TITUS MODEL DESV SIZE 6	350	175	0.40	175	1	8.1	55	98	0.4	180	140	3	1/2"	0.8	
VAV 3-2	TITUS MODEL DESV SIZE 8	(A) 700	350	0.40	287	1	13.3	55	98	0.7	180	140	3	1/2"	0.8	
VAV 3-3	TITUS MODEL DESV SIZE 6	350	175	0.40	175	1	8.1	55	98	0.4	180	140	3	1/2"	0.8	
VAV 3-4	TITUS MODEL DESV SIZE 7	500	250	0.40	250	1	11.6	55	98	0.6	180	140	3	1/2"	0.8	
VAV 3-5	TITUS MODEL DESV SIZE 6	350	175	0.40	175	1	8.1	55	98	0.4	180	140	3	1/2"	0.8	
VAV 3-6	TITUS MODEL DESV SIZE 8	700	350	0.40	350	1	16.3	55	98	0.8	180	140	3	1/2"	0.8	
VAV 3-7	TITUS MODEL DESV SIZE 8	600	300	0.40	300	1	13.9	55	98	0.7	180	140	3	1/2"	0.8	
VAV 3-8	TITUS MODEL DESV SIZE 8	650	325	0.40	325	1	15.1	55	98	0.8	180	140	3	1/2"	0.8	
VAV 3-9	TITUS MODEL DESV SIZE 5	200	100	0.40	100	1	4.6	55	98	0.2	180	140	3	1/2"	0.8	
VAV 3-10	TITUS MODEL DESV SIZE 10	900	450	0.40	450	1	20.9	55	98	1.0	180	140	3	1/2"	0.8	
VAV 3-11	TITUS MODEL DESV SIZE 10	900	450	0.40	450	1	20.9	55	98	1.0	180	140	3	1/2"	0.8	
VAV 3-12	TITUS MODEL DESV SIZE 9	800	400	0.40	400	1	18.6	55	98	0.9	180	140	3	1/2"	0.8	
VAV 3-13	TITUS MODEL DESV SIZE 8	550	275	0.40	275	1	12.8	55	98	0.6	180	140	3	1/2"	0.8	
VAV 3-14	TITUS MODEL DESV SIZE 4	125	62	0.40	62	1	2.9	55	98	0.2	180	140	3	1/2"	0.8	
VAV 3-15	TITUS MODEL DESV SIZE 6	400	200	0.40	200	1	9.3	55	98	0.5	180	140	3	1/2"	0.8	
VAV 3-16	TITUS MODEL DESV SIZE 6	400	200	0.40	200	1	9.3	55	98	0.5	180	140	3	1/2"	0.8	
VAV 3-17	TITUS MODEL DESV SIZE 7	450	225	0.40	225	1	10.5	55	98	0.5	180	140	3	1/2"	0.8	
VAV 3-18	TITUS MODEL DESV SIZE 5	250	125	0.40	125	1	5.8	55	98	0.3	180	140	3	1/2"	0.8	
VAV 3-19	TITUS MODEL DESV SIZE 5	250	125	0.40	125	1	5.8	55	98	0.3	180	140	3	1/2"	0.8	
VAV 3-20	TITUS MODEL DESV SIZE 7	500	250	0.40	250	1	11.6	55	98	0.6	180	140	3	1/2"	0.8	
VAV 3-27	TITUS MODEL DESV SIZE 8	725	362	0.40	362	1	16.8	55	98	0.8	180	140	3	1/2"	0.8	
VAV 4-1	TITUS MODEL DESV SIZE 12	1250	625	0.40	625	1	29.0	55	98	1.5	180	140	3	1/2"	0.8	
VAV 4-2	TITUS MODEL DESV SIZE 14	1900	950	0.40	950	1	44.1	55	98	2.2	180	140	3	1/2"	1.2	
VAV 4-3	TITUS MODEL DESV SIZE 12	1650	825	0.40	825	1	38.3	55	98	1.9	180	140	3	1/2"	1.2	
VAV 4-4	TITUS MODEL DESV SIZE 12	1650	825	0.40	825	1	38.3	55	98	1.9	180	140	3	1/2"	1.2	
VAV 4-5	TITUS MODEL DESV SIZE 10	900	450	0.40	450	1	20.9	55	98	1.0	180	140	3	1/2"	0.8	
VAV 4-6	TITUS MODEL DESV SIZE 10	1000	500	0.40	500	1	23.2	55	98	1.2	180	140	3	1/2"	0.8	
VAV 4-7	TITUS MODEL DESV SIZE 12	1200	600	0.40	600	1	27.9	55	98	1.4	180	140	3	1/2"	0.8	
VAV 4-8	TITUS MODEL DESV SIZE 14	2250	1125	0.40	1125	1	52.3	55	98	2.6	180	140	3	1/2"	1.2	
VAV 4-9	TITUS MODEL DESV SIZE 10	1000	500	0.40	500	1	23.2	55	98	1.2	180	140	3	1/2"	0.8	
VAV 4-10	TITUS MODEL DESV SIZE 12	1650	825	0.40	825	1	38.3	55	98	1.9	180	140	3	1/2"	1.2	
VAV 4-11	TITUS MODEL DESV SIZE 12	1375	687	0.40	687	1	31.9	55	98	1.6	180	140	3	1/2"	0.8	

NOTES:
1. VAV BOXES SHALL HAVE MULTI-POINT SENSORS, INTEGRAL ATTENUATOR, AND STERI-LOC LINING.
2. VAV BOX ENTERING WATER TEMPERATURE SHALL BE 180°F, EXITING TEMPERATURE SHALL BE APPROXIMATELY 140°F.
3. ALL REHEAT COILS SHALL HAVE 2-WAY TEMPERATURE CONTROL VALVES.
4. TRANSITION BRANCH DUCT TO VAV BOXES TO BOX INLET SIZE.
5. TCVs BASED ON BELIMO B3 SERIES VALVES.

SYMBOL	MANUFACTURER AND MODEL	MAX. CFM	MIN. CFM	AIR S.P. LOSS (MAX.)	REHEAT COIL DATA											NOTES
								AIR		WATER				TCV		
					CFM	ROWS	MBH	EAT	LAT	GPM	EWT	LWT	PD. FT.	SIZE	CV	
VAV 5-1	TITUS MODEL DESV SIZE 14	1850	925	0.40	925	1	40.6	55	98	2.0	180	140	3	1/2"	1.2	
VAV 5-2	TITUS MODEL DESV SIZE 10	900	450	0.40	450	1	37.2	55	98	1.9	180	140	3	1/2"	1.2	
VAV 5-3	TITUS MODEL DESV SIZE 14	1700	850	0.40	850	1	39.5	55	98	2.0	180	140	3	1/2"	1.2	
VAV 5-4	TITUS MODEL DESV SIZE 14	2250	1125	0.40	1125	1	52.2	55	98	2.6	180	140	3	1/2"	1.2	
VAV 5-5	TITUS MODEL DESV SIZE 14	1750	875	0.40	875	1	40.1	55	98	2.0	180	140	3	1/2"	1.2	
VAV 5-6	TITUS MODEL DESV SIZE 12	1750	875	0.40	875	1	40.6	55	98	2.0	180	140	3	1/2"	1.2	
VAV 6-1	TITUS MODEL DESV SIZE 8	650	325	0.40	325	1	15.1	55	98	0.8	180	140	3	1/2"	0.8	
VAV 6-2	TITUS MODEL DESV SIZE 12	1500	750	0.40	750	1	34.8	55	98	1.74	180	140	3	1/2"	1.2	
VAV 6-3	TITUS MODEL DESV SIZE 14	2000	1500	0.40	1500	1	69.7	55	98	3.5	180	140	3	1/2"	1.9	
VAV 6-4	TITUS MODEL DESV SIZE 24	3500	3000	0.40	3000	2	139.3	55	98	7.0	180	140	3	1/2"	4.7	
VAV 6-5	TITUS MODEL DESV SIZE 24	4200	3000	0.40	3000	2	139.3	55	98	7.0	180	140	3	1/2"	4.7	
VAV 6-6	TITUS MODEL DESV SIZE 9	800	400	0.40	400	1	18.6	55	98	0.9	180	140	3	1/2"	0.8	
VAV 6-7	TITUS MODEL DESV SIZE 4	125	75	0.40	75	1	3.5	55	98	0.2	180	140	3	1/2"	0.8	
VAV 6-8	TITUS MODEL DESV SIZE 7	450	225	0.40	225	1	10.5	55	98	0.5	180	140	3	1/2"	0.8	
VAV 6-9	TITUS MODEL DESV SIZE 6	425	225	0.40	225	1	10.5	55	98	0.5	180	140	3	1/2"	0.8	
VAV 6-10	TITUS MODEL DESV SIZE 6	400	200	0.40	200	1	9.3	55	98	0.5	180	140	3	1/2"	0.8	
VAV 6-11	TITUS MODEL DESV SIZE 8	750	375	0.40	375	1	17.4	55	98	0.9	180	140	3	1/2"	0.8	

SUPPLY / HOOD / EXHAUST AIR VALVE SCHEDULE

SYMBOL	MANUFACTURER MODEL & SIZE	MAX. CFM	MIN. CFM	OFFSET CFM	MAX. CLG. CFM	REMARKS
SUP 1-1	PHOENIX MAVA210M-ADEHC-MF	1650	825	185	1650	PROVIDE WITH PHOENIX NEUTRALIZER
GEX 1-1	PHOENIX EXVA210M-ADEHO	1635	510			-
HEX 1-1	PHOENIX EXVB110M-ADHHO	500	200			-
SUP 2-1	PHOENIX MAVA210M-ADEHC-MF	1650	825	185	1650	PROVIDE WITH PHOENIX NEUTRALIZER
GEX 2-1	PHOENIX EXVA210M-ADEHO	1635	510			-
HEX 2-1	PHOENIX EXVB110M-ADHHO	500	200			-
SUP 3-1	PHOENIX MAVA112M-AEHC-MF	1670	1065	185	1670	-
GEX 3-1	PHOENIX EXVA110M-ADEHO	655	50			-
CCV 3-1	PHOENIX EXVB112M-ADHHO	1330	1330			-
HEX 3-1	PHOENIX EXVB110M-ADHHO	800	200			-
SUP 4-1	PHOENIX MAVA212M-ADHC-MF	2000	1000	750	2000	PROVIDE WITH PHOENIX NEUTRALIZER
SUP 4-2	PHOENIX MAVA212M-ADHC-MF	2000	180			-
SUP 4-3	PHOENIX MAVA212M-ADHC-MF	2000	180			-
GEX 4-1	PHOENIX EXVA212M-ADEHO	1825	180			-
HEX 4-1	PHOENIX EXVB110M-ADHHO	800	200			-
HEX 4-2	PHOENIX EXVB110M-ADHHO	800	200			-
HEX 4-1	PHOENIX EXVB210M-ADHHO	1600	100			-
HEX 4-2	PHOENIX EXVB210M-ADHHO	1600	100			-
HEX 4-3	PHOENIX EXVB210M-ADHHO	1600	100			-
CVV 4-1	PHOENIX EXVB112M-ADHHO	400	35			-
SUP 5-1	PHOENIX MAVA212M-ADHC-MF	2000	1000	225	2000	PROVIDE WITH PHOENIX NEUTRALIZER
GEX 5-1	PHOENIX EXVA212M-ADEHO	1825	180			-
SUP 6-1	PHOENIX MAVA212M-ADHC-MF	225	225			-
CVV 6-1	PHOENIX EXVA212M-ADEHO	200	200			-

NOTES:
1. PROVIDE VALVE SYSTEMS COMPLETE WITH HOOD MONITORS, AND SASH SENSORS
2. HOOD CONTROLS SHALL BE CAPABLE OF TIE-IN WITH DDC ENERGY MANAGEMENT SYSTEM.
3. ALL AIR VALVES SHALL BE PROVIDED WITH CELERIS II DIGITAL CONTROLLERS AND CONNECTED TO THE DDC SYSTEM VIA BACKNET 2 INTERFACE.

VAV BOX WEIGHT SCHEDULE

INLET SIZE	WEIGHT
5"ø & 6"ø	45 LBS.
7"ø & 8"ø	49 LBS.
10"ø	59 LBS.
12"ø	71 LBS.
14"ø	79 LBS.
16"ø	96 LBS.
24"ø	144 LBS.

NOTE: 1. WEIGHT INCLUDES TERMINAL BOX WITH ATTENUATOR SECTION AND WET COIL.

INLET SCHEDULE

INLET DESIGNATION	AIRFLOWS CFM RANGE	INLET SIZE
(A)	0-250	12x12
(B)	251-565	18x18
(C)	566-840	22x22

NOTES:
1. AIR BALANCE ALL OPEN AREAS AND INDIVIDUAL ROOMS FOR EQUAL PRESSURE CONDITIONS.

TRANSFER AIR OPENING NOTES

SYMBOL	SIZE (WIDTH"xHEIGHT")	MAXIMUM TRANSFER AIR (CFM)
(D)	14x10	250
(E)	14x18	450
(A) (F)	14x24	700

NOTES:
1. PROVIDE OPENING IN WALL ABOVE CEILING TO ALLOW TRANSFER OF PLENUM RETURN AIR. OPENINGS SHALL BE ABOVE CEILINGS AT ALL LOCATIONS MARKED WITH A (A) ACCORDING TO THE SCHEDULE BELOW. LOCATE OPENINGS AT HIGHEST ELEVATION POSSIBLE. ALL OPENINGS SHALL BE FINISHED WITH GYP. BOARD.

tBP/Architecture
1000 Burnett Ave, Suite 140
Concord, CA 94520
ph: 925.246.6419 fx: 925.246.6495

architect

AINSWORTH ASSOCIATES
MECHANICAL ENGINEERS
SACRAMENTO, CA

consultant

APPROVED
ABBREVIATIONS STAMP
BY: DIVISION OF THE STATE ARCHITECT
OFFICE OF REGULATION SERVICES
APPL. NO. 02-0715
DATE 6-15-04

agency

SAN RAMON VALLEY CENTER
CONTRA COSTA COMMUNITY COLLEGE DISTRICT
SAN RAMON, CALIFORNIA

owner

tBP project number : 2021.00
file name:
drawn by: DW checked by: SA
date: 03-09-04 plot scale: 1:1

Rev:	date:	description:
1	05-26-04	DESIGN CLARIFICATIONS

drawing title: MECHANICAL - SCHEDULES
building no.:
drawing no.: M0.2
drawing of

\\2002-tBP\WORK\M0.2.dwg Thu, Jun 03, 2004 - 02:59pm

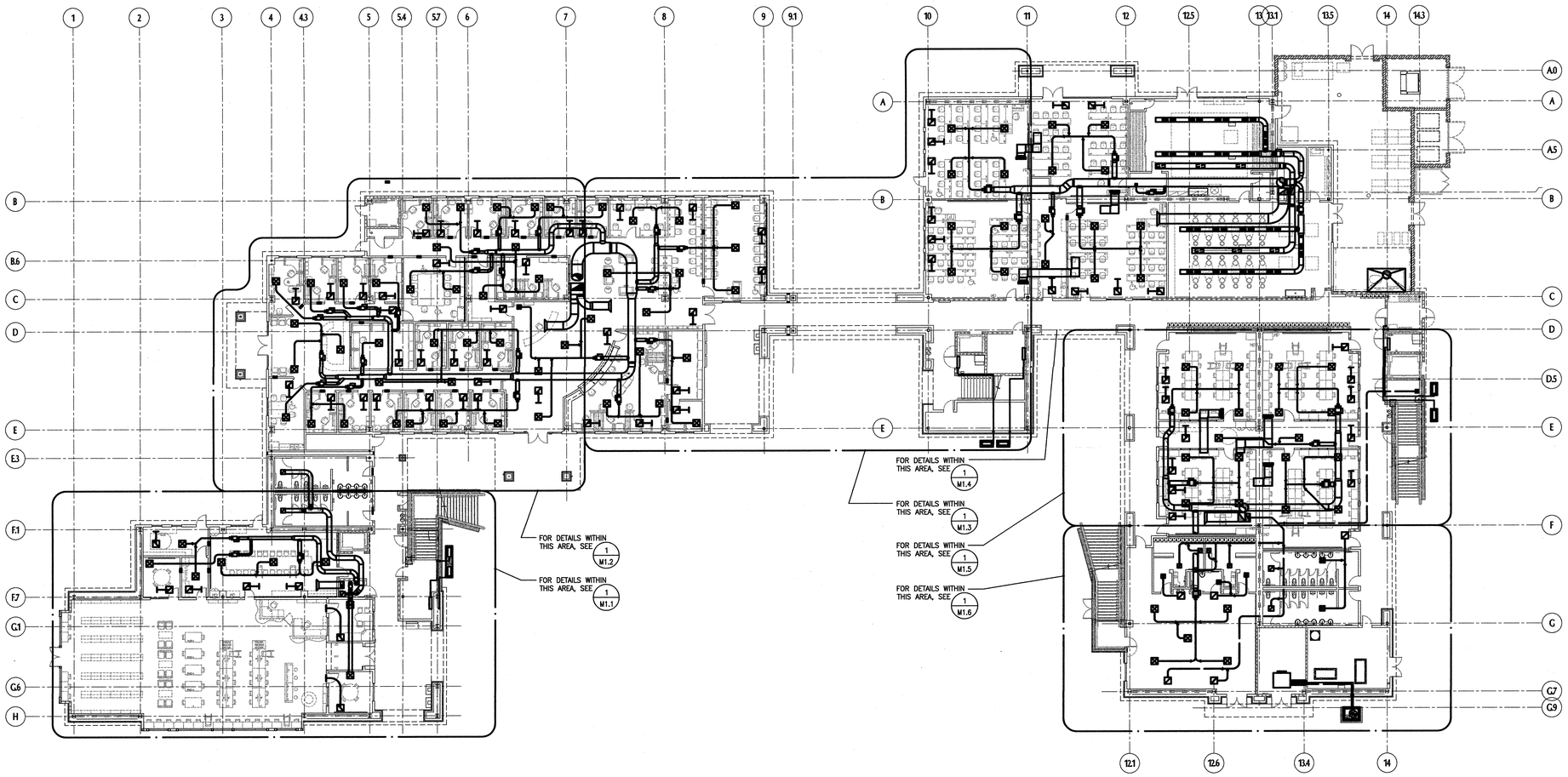

MECHANICAL - OVERALL - FIRST FLOOR PLAN

SCALE: 1/16"=1'-0"

1 / M1.0

tBP

architecture
planning
interiors
management

tBP/Architecture
1000 Burnett Ave, Suite 140
Concord, CA 94520
ph: 925.246.6419 fx: 925.246.6495

architect

AINSWORTH ASSOCIATES
MECHANICAL ENGINEERS
SACRAMENTO, CA
JOB:2002-038

consultant

APPROVED
~~IDENTIFICATION~~ STAMP
DIVISION OF THE STATE ARCHITECT
APPL 01 1-06-02 105719
AC ___ FLS ___ SS ___
DATE 6-9-04

agency

SAN RAMON VALLEY CENTER

CONTRA COSTA COMMUNITY COLLEGE DISTRICT

SAN RAMON, CALIFORNIA

owner

tBP project number : 20212.00

file name:

drawn by: DW checked by: SA

date: 03-04-04 plot scale: 1:1

Rev:	date:	description:
1	05-26-04	DESIGN CLARIFICATIONS

drawing title: building no.:

MECHANICAL - OVERALL 1ST FLOOR PLAN

drawing no.:

M1.0

drawing of

120

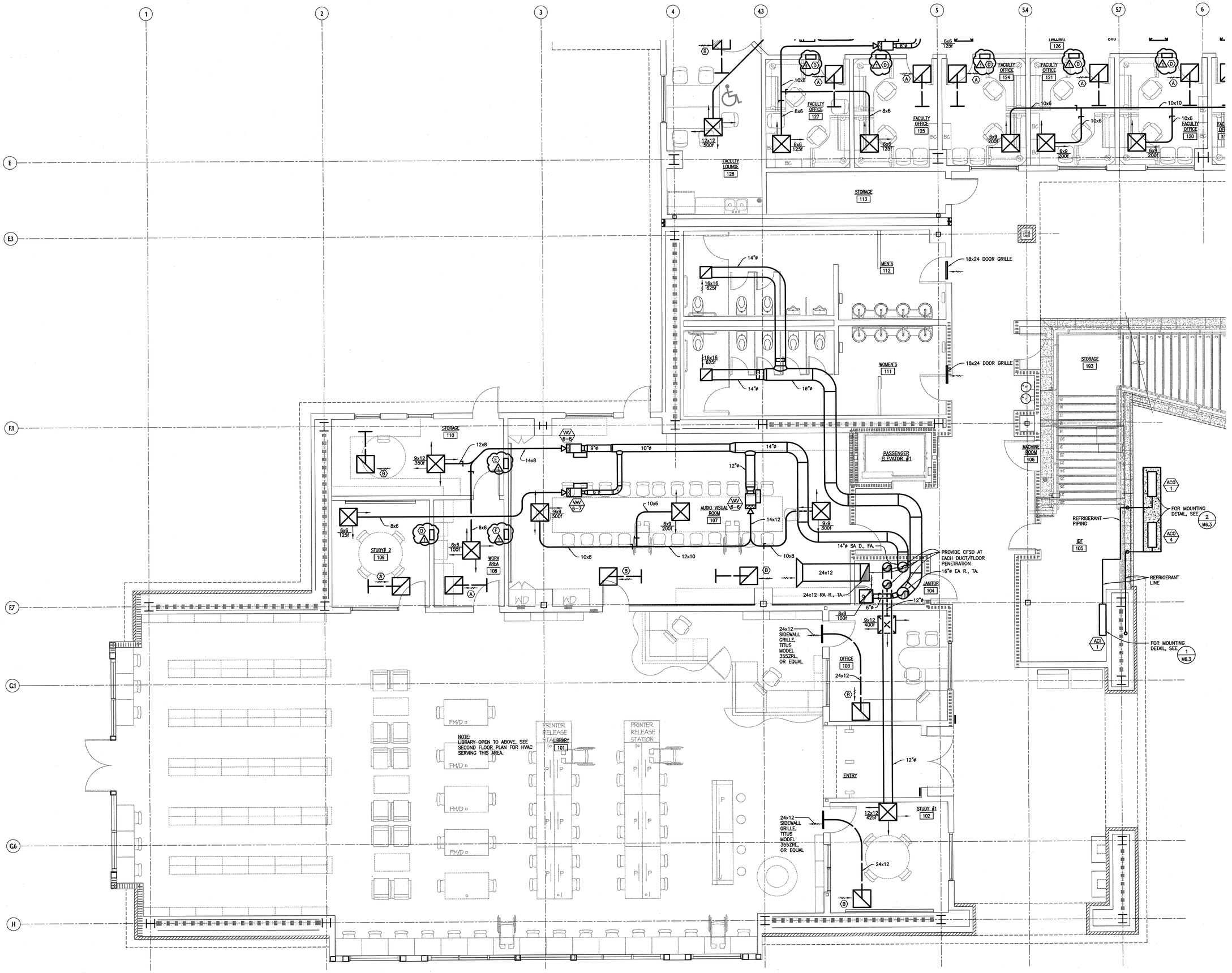

MECHANICAL - PARTIAL FIRST FLOOR PLAN

SCALE: 1/4"=1'-0"

1 / M1.1

tBP architecture planning interiors management

tBP/Architecture
1000 Burnett Ave, Suite 140
Concord, CA 94520
ph: 925.246.6419 fx: 925.246.6495

architect

AINSWORTH ASSOCIATES
MECHANICAL ENGINEERS
SACRAMENTO, CA
JOB: 2002-098

consultant

APPROVED
IDENTIFICATION STAMP
DIVISION OF THE STATE ARCHITECT
APPL 01 1-06-062
AC FLS SS
DATE 6-9-04

agency

SAN RAMON VALLEY CENTER

CONTRA COSTA COMMUNITY COLLEGE DISTRICT

SAN RAMON, CALIFORNIA

owner

tBP project number : 2021200

file name:

drawn by: DW checked by: SA

date: 03-04-04 plot scale: 1:1

Rev:	date:	description:
1	05-26-04	DESIGN CLARIFICATIONS

drawing title: building no.:

MECHANICAL - PARTIAL 1ST FLOOR PLAN

drawing no.:

M1.1

drawing of

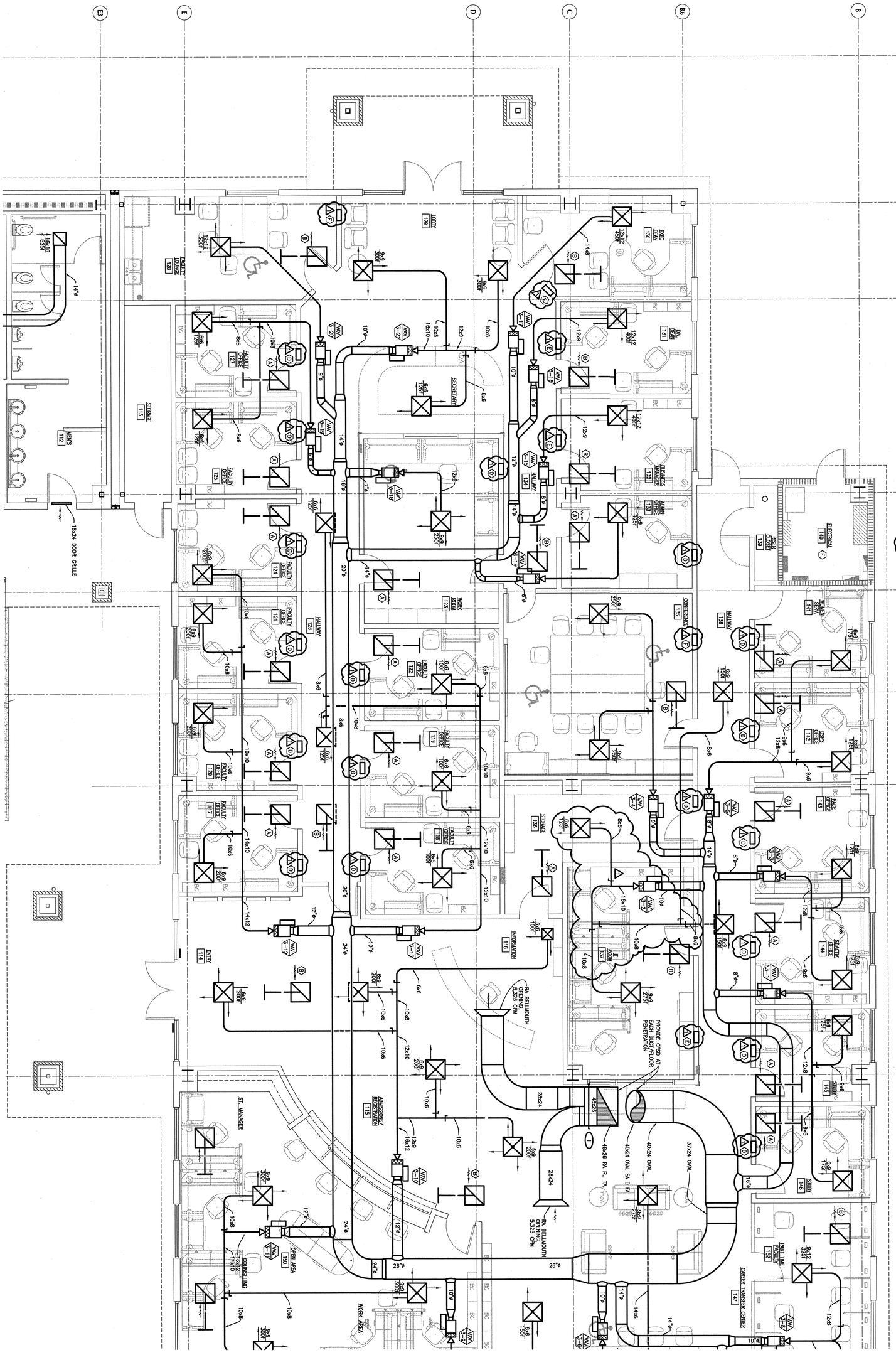
LOBBY 129
FACULTY LOUNGE 128
STORAGE 113
MEN'S 112
18x24 DOOR GRILLE
FACULTY OFFICE 127
FACULTY OFFICE 125
FACULTY OFFICE 124
FACULTY OFFICE 121
HALLWAY 126
FACULTY OFFICE 122
FACULTY OFFICE 119
FACULTY OFFICE 120
FACULTY OFFICE 117
BANK 114
SECRETARIAL
INFORMATION 116
ADMISSIONS/ REGISTRATION 115
SR. MANAGER
COUNSELING 152
OPEN AREA 150
WORK AREA
WORK ROOM 123
IT ROOM 137
STORAGE 136
PA BELLMOUTH OPENING, 5,325 CFM
PROVIDE CFSD AT EACH DUCT/FLOOR PENETRATION
PA BELLMOUTH OPENING, 5,325 CFM
PAGE DESK 130
JAN. 131
BUSINESS MANAGER 132
ADMIN. ASSIST. 133
ELECTRICAL 140
JANITOR 139
HALLWAY 138
CONFERENCE 135
ADMIN. ASSIST. 141
PAGE OFFICE 142
STUDY 144
STUDY 145
STUDY 146
PART TIME FACULTY 152
CAREER TRANSFER CENTER 147
PAGE OFFICE 143
HALLWAY
VAV-1
VAV-2
VAV-3
VAV-4
VAV-5
VAV-6
VAV-7
VAV-8
VAV-9
VAV-10
VAV-11
VAV-12
VAV-13
VAV-14
VAV-15
VAV-16
VAV-17
VAV-18
VAV-19
VAV-20
VAV-21
VAV-22
VAV-23
VAV-24
VAV-25
VAV-26
VAV-27
48x26
48x26 RA R., TA
40x24 OVAL
40x24 OVAL SA D PA
37x24 OVAL
28x24
28x24
12x12 400 F
12x12 400 F
8x12 325 F
8x6 150 F
8x6 175 F
8x6 200 F
8x6 225 F
8x6 250 F
8x6 275 F
8x6 300 F
8x6 100 F
8x6 125 F
8x6 150 F
8x6 175 F
8x6 200 F
8x6 225 F
8x6 250 F
8x6 275 F
8x6 300 F
8x6 325 F
8x6 350 F
8x6 375 F
8x6 400 F
8x6

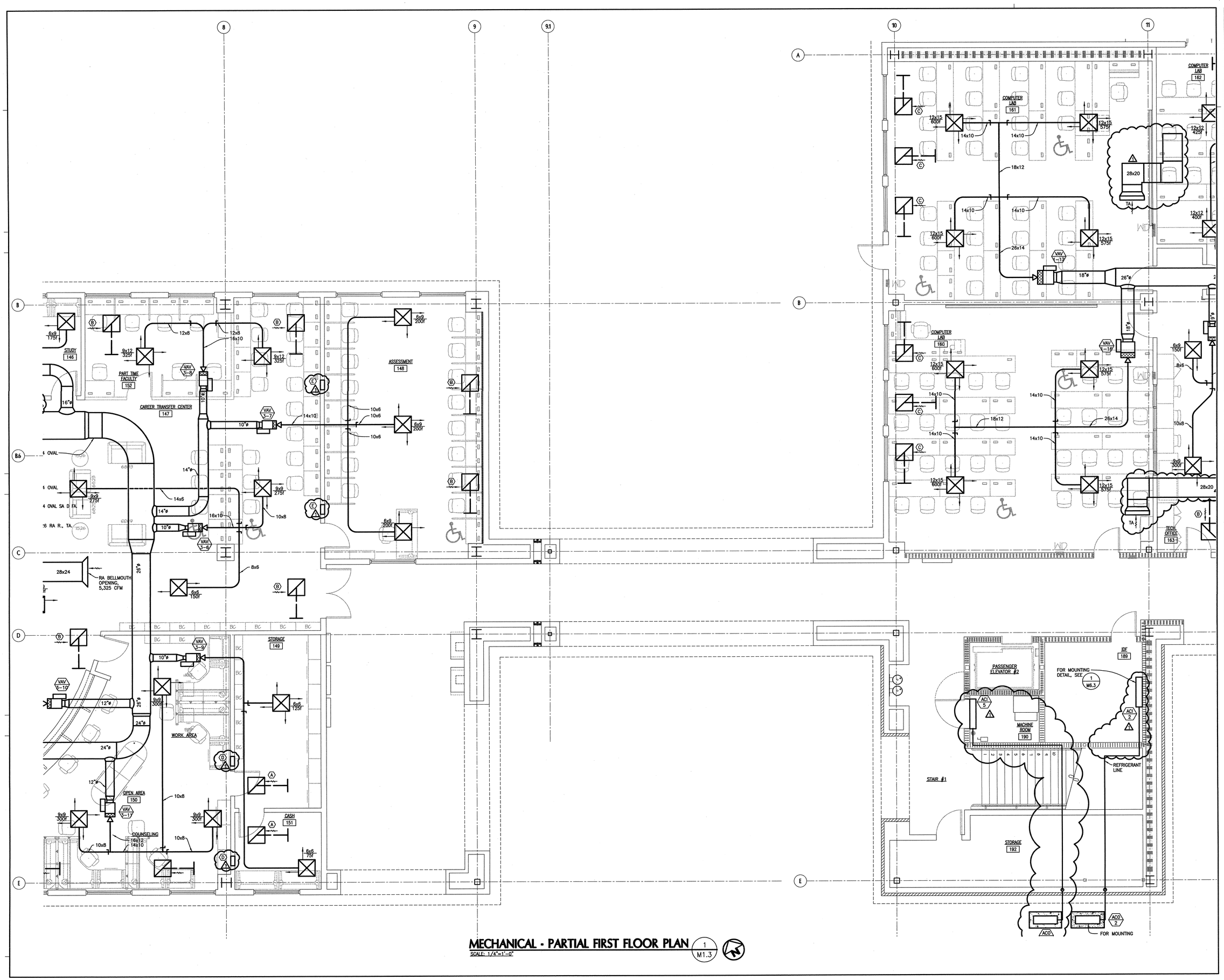

MECHANICAL - PARTIAL FIRST FLOOR PLAN 1 M1.3

SCALE: 1/4"=1'-0"

tBP architecture planning interiors management

tBP/Architecture
1000 Burnett Ave, Suite 140
Concord, CA 94520
ph: 925.246.6419 fx: 925.246.6495

architect

AINSWORTH ASSOCIATES
MECHANICAL ENGINEERS
SACRAMENTO, CA
JOB: 2002-036

consultant

APPROVED
IDENTIFICATION STAMP
DIVISION OF THE STATE ARCHITECT
APPL 01 105719
AC FLS SS
DATE 6-9-04

agency

SAN RAMON VALLEY CENTER

CONTRA COSTA COMMUNITY COLLEGE DISTRICT

SAN RAMON, CALIFORNIA

owner

tBP project number : 20212.00

file name:

drawn by: DW checked by: SA

date: 03-09-04 plot scale: 1:1

Rev:	date:	description:
1	05-26-04	DESIGN CLARIFICATIONS

drawing title: building no.:

MECHANICAL - PARTIAL 1ST FLOOR PLAN

drawing no.:

M1.3

drawing of

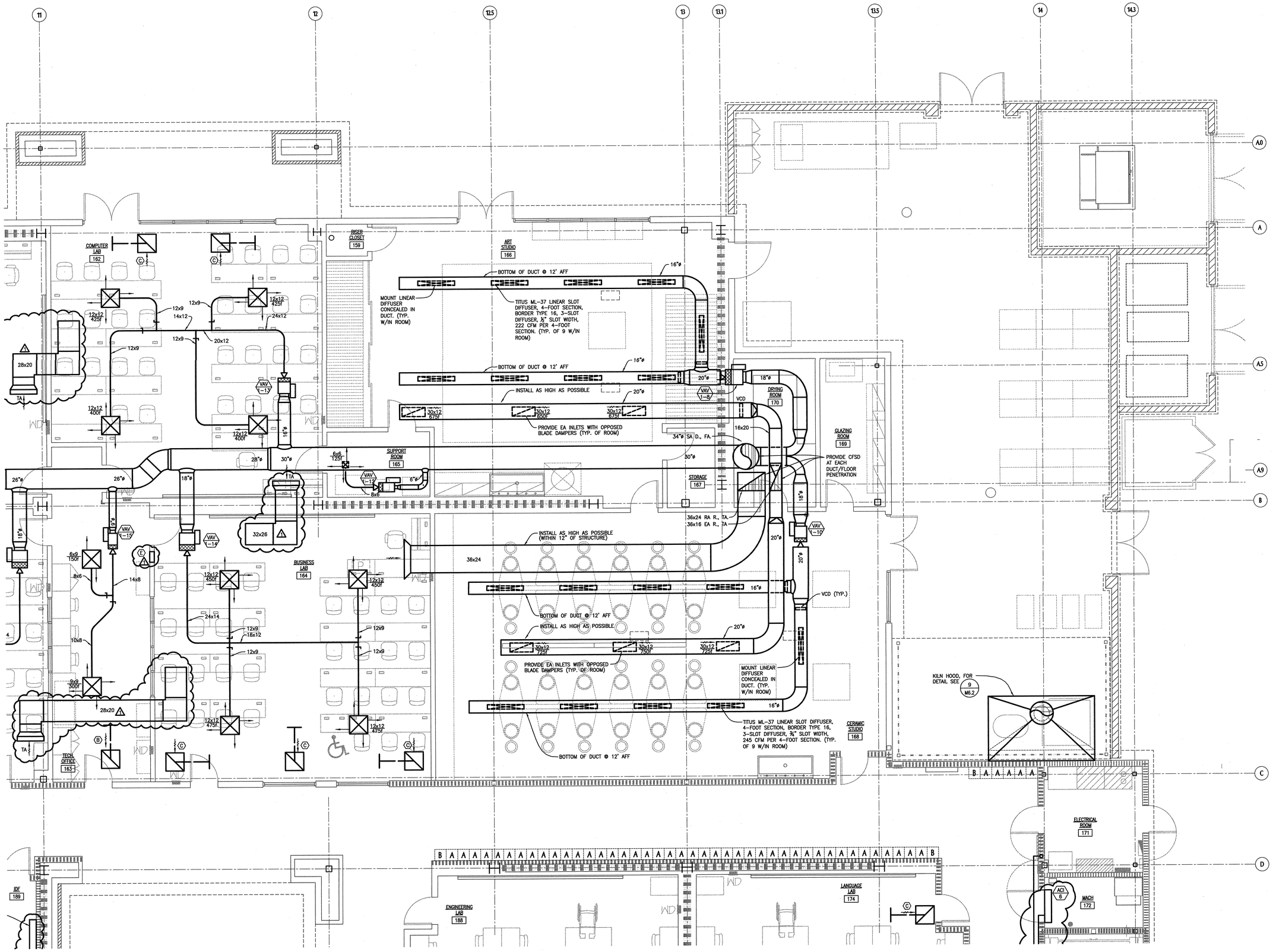

MECHANICAL - PARTAIL FIRST FLOOR PLAN

1 / M1.4

SCALE: 1/4"=1'-0"

tBP architecture planning interiors management

tBP/Architecture
1000 Burnett Ave, Suite 140
Concord, CA 94520
ph: 925.246.6419 fx: 925.246.6495

architect

AINSWORTH ASSOCIATES
MECHANICAL ENGINEERS
SACRAMENTO, CA
JOB: 2002-088

consultant

APPROVED
~~IDENTIFICATION~~ STAMP
DIVISION OF THE STATE ARCHITECT
APPL 01 I-06062
AC FLS. LC SS. GS
DATE 6-9-04

agency

SAN RAMON VALLEY CENTER

CONTRA COSTA COMMUNITY COLLEGE DISTRICT

SAN RAMON, CALIFORNIA

owner

tBP project number : 2021.2.00

file name:

drawn by: DW checked by: SA

date: 03-04-04 plot scale: 1:1

Rev:	date:	description:
1	05-26-04	DESIGN CLARIFICATIONS

drawing title: building no.:

MECHANICAL - PARTIAL 1ST FLOOR PLAN

drawing no.:

M1.4

drawing of

129

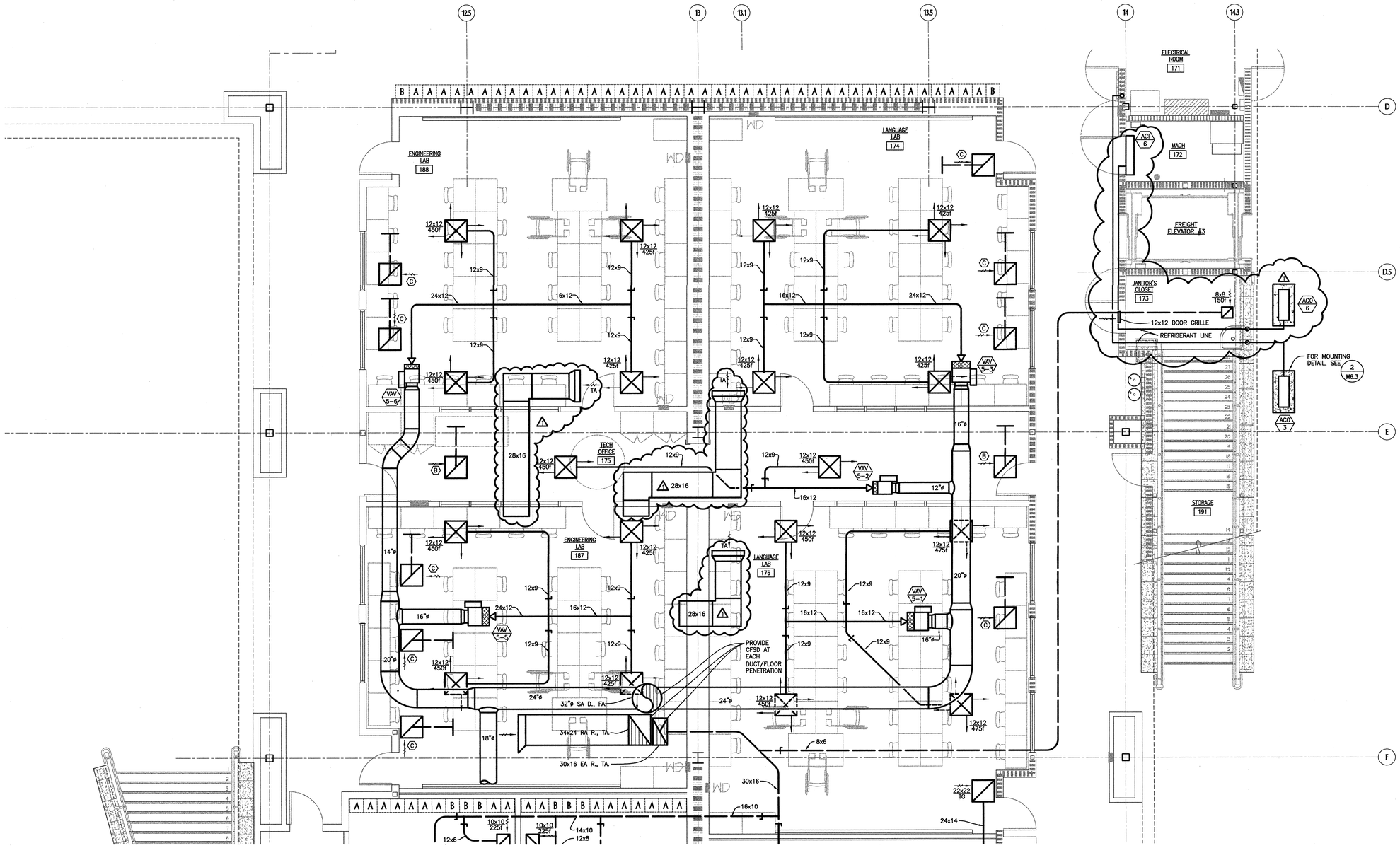

MECHANICAL - PARTIAL FIRST FLOOR PLAN

1 / M1.5

SCALE: 1/4"=1'-0"

tBP architecture planning interiors management

tBP/Architecture
1000 Burnett Ave, Suite 140
Concord, CA 94520
ph: 925.246.6419 fx: 925.246.6495

architect

AINSWORTH ASSOCIATES
MECHANICAL ENGINEERS
SACRAMENTO, CA
JOB 2002-098

consultant

APPROVED ~~IDENTIFICATION~~ STAMP
DIVISION OF THE STATE ARCHITECT
APPL 01 105719
AC FLS SS
DATE 6-9-04

agency

SAN RAMON VALLEY CENTER

CONTRA COSTA COMMUNITY COLLEGE DISTRICT
SAN RAMON, CALIFORNIA

owner

tBP project number : 20212.00
file name:
drawn by: DW checked by: SA
date: 03-04-04 plot scale: 1:1

Rev:	date:	description:
1	05-26-04	DESIGN CLARIFICATIONS

drawing title: building no.:
MECHANICAL - PARTIAL 1ST FLOOR PLAN

drawing no.:
M1.5
drawing of

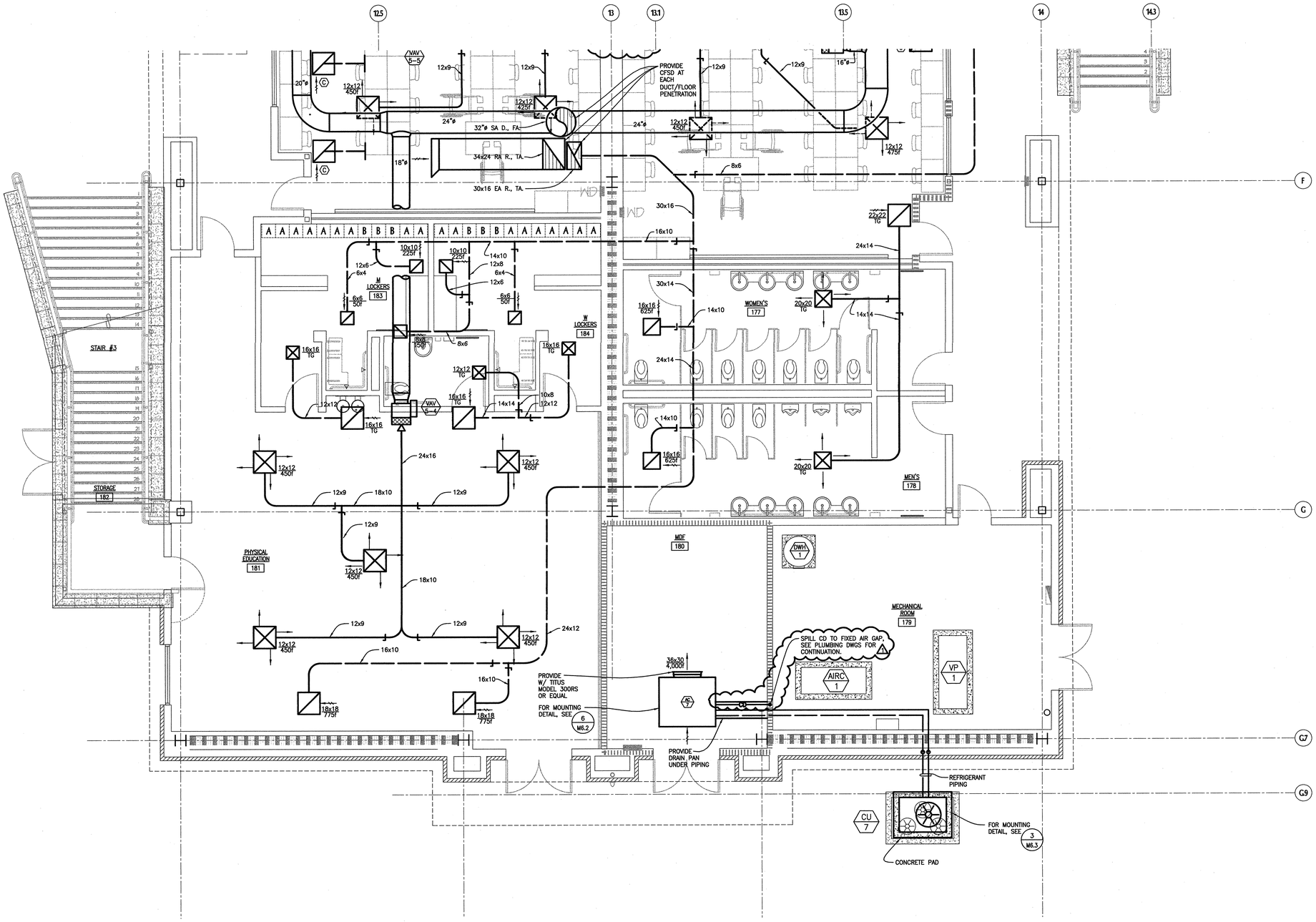

MECHANICAL - PARTIAL FIRST FLOOR PLAN

1 / M1.6

SCALE: 1/4"=1'-0"

tBP architecture planning interiors management

tBP/Architecture
1000 Burnett Ave, Suite 140
Concord, CA 94520
ph: 925.246.6419 fx: 925.246.6495

architect

AINSWORTH ASSOCIATES
MECHANICAL ENGINEERS
SACRAMENTO, CA
JOB: 2002-088

consultant

APPROVED
IDENTIFICATION STAMP
DIVISION OF THE STATE ARCHITECT
APPL 01 105714 106062
AC FLS SS
DATE 6-9-04

agency

SAN RAMON VALLEY CENTER

CONTRA COSTA COMMUNITY COLLEGE DISTRICT

SAN RAMON, CALIFORNIA

owner

tBP project number : 20212.00

file name:

drawn by: DW checked by: SA

date: 03-04-04 plot scale: 1:1

Rev:	date:	description:
1	05-26-04	DESIGN CLARIFICATIONS

drawing title: building no.:

MECHANICAL - PARTIAL 1ST FLOOR PLAN

drawing no.:

M1.6

drawing of

126

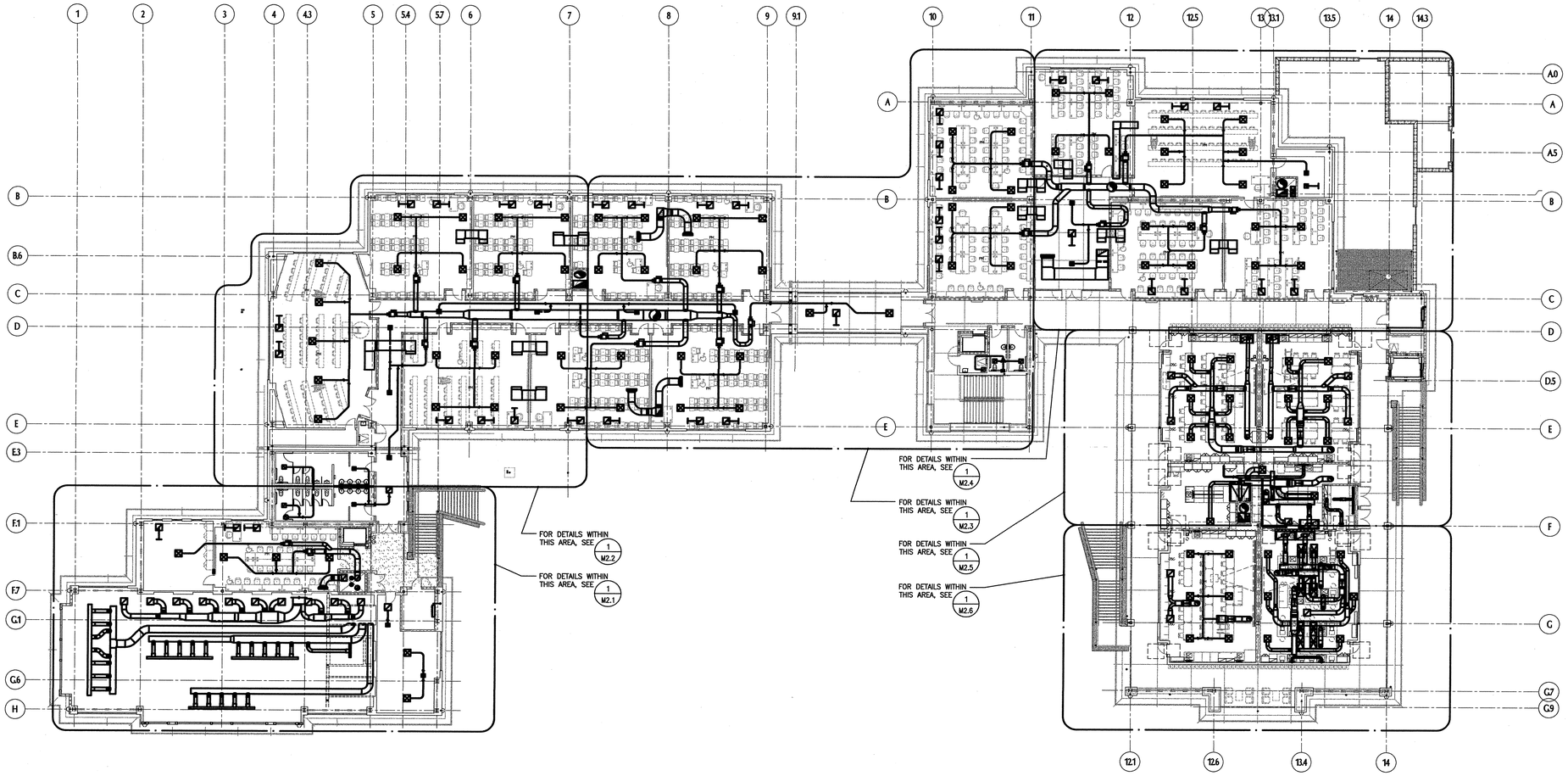

MECHANICAL - OVERALL 2ND FLOOR PLAN

SCALE: 1/16"=1'-0"

1/M2.0

tBP
architecture
planning
interiors
management

tBP/Architecture
1000 Burnett Ave, Suite 140
Concord, CA 94520
ph: 925.246.6419 fx: 925.246.6495

architect

AINSWORTH ASSOCIATES
MECHANICAL ENGINEERS
SACRAMENTO, CA
JOB: 2002-098

consultant

APPROVED
DIV. OF THE STATE ARCHITECT
OFFICE OF REGULATION SERVICES
APPL. NO. 105719
FLS
DATE 6-9-04

agency

SAN RAMON VALLEY CENTER

CONTRA COSTA COMMUNITY COLLEGE DISTRICT

SAN RAMON, CALIFORNIA

owner

tBP project number : 20212.00

file name:

drawn by: DW checked by: SA

date: 03-09-04 plot scale: 1:1

Rev:	date:	description:
1	05-26-04	DESIGN CLARIFICATIONS

drawing title: building no.:

MECHANICAL - OVERALL 2ND FLOOR PLAN

drawing no.:

M2.0

drawing of

128

U:\2002-058\DWGS\M2-1-6.dwg Time: Jun03,2004-03:58pm

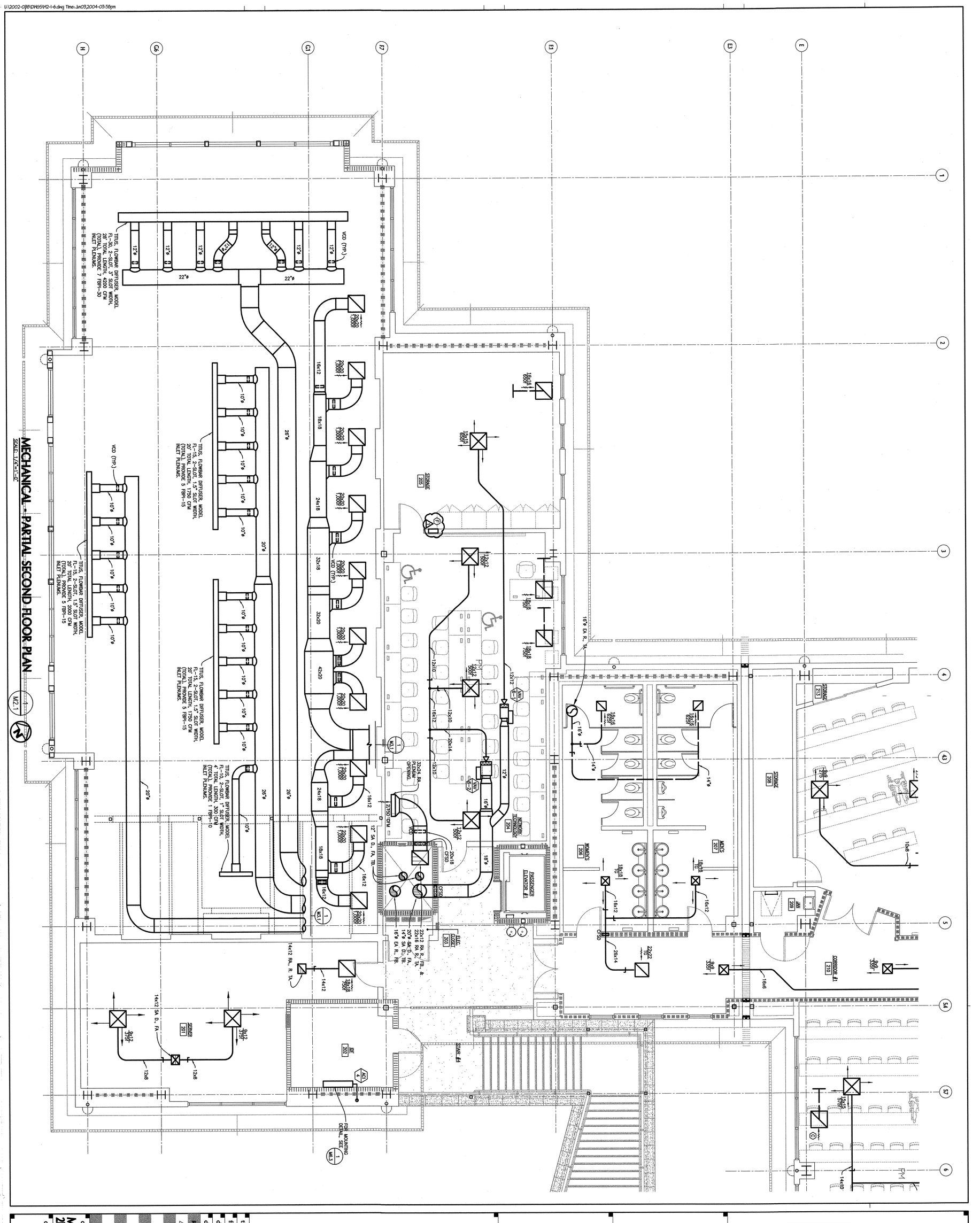

SAN RAMON VALLEY CENTER

CONTRA COSTA COMMUNITY COLLEGE DISTRICT

SAN RAMON, CALIFORNIA

owner

tBP project number: 2002.00

file name:

drawn by: DN checked by: SA

date: 03-04-04 plot scale: 1:1

Rev. date: description:

△ 05-26-04 DESIGN CLARIFICATIONS

drawing title: building no:

MECHANICAL - PARTIAL 2ND FLOOR PLAN

drawing no: M2.1

drawing of

agency

APPROVED
IDENTIFICATION STAMP
DIV. OF THE STATE ARCHITECT
OFFICE OF REGULATION SERVICES
01
APPL NO. 105719
ACN FLS. SS
DATE 6-9-04

consultant

REGISTERED PROFESSIONAL ENGINEER
DAVID A. WESTON
No. M31220
EXPIRES 12/31/05
MECHANICAL
STATE OF CALIFORNIA

AINSWORTH ASSOCIATES
MECHANICAL ENGINEERS
SACRAMENTO, CA
JOB: 2002-058

architect

LICENSED ARCHITECT
RICHARD A. MANGUM
NO. C-8685
REN. 12-31-05
STATE OF CALIFORNIA

tBP/Architecture
1000 Burnett Ave, Suite 140
Concord, CA 94520
ph: 925.246.6419 fx: 925.246.6495

tBP
architecture
planning
interiors
management

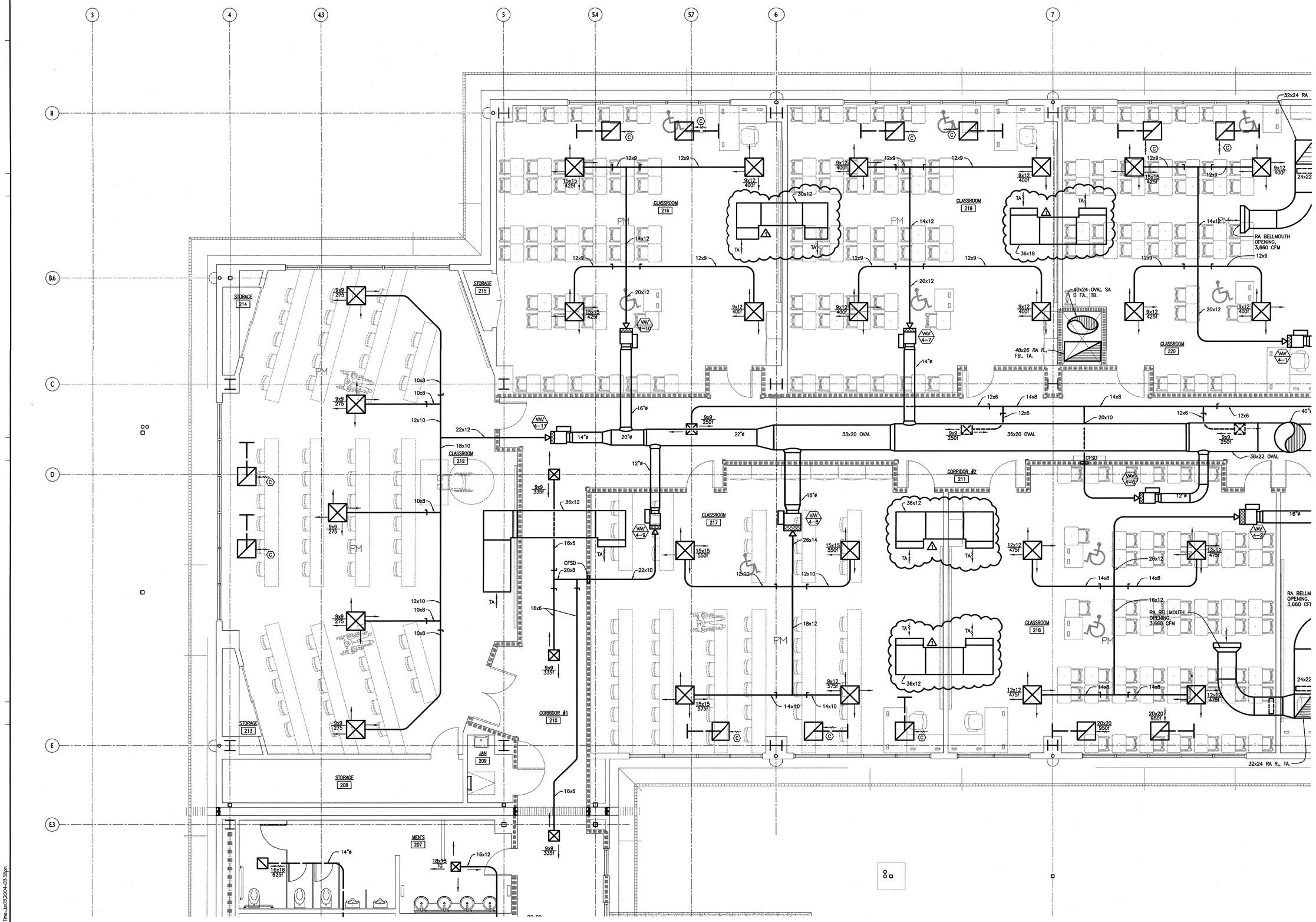

MECHANICAL - PARTIAL SECOND FLOOR PLAN

SCALE: 1/4"=1'-0"

1 / M2.2

tBP architecture planning interiors management

tBP/Architecture
1000 Burnett Ave, Suite 140
Concord, CA 94520
ph: 925.246.6419 fx: 925.246.6495

architect

AINSWORTH ASSOCIATES
MECHANICAL ENGINEERS
SACRAMENTO, CA
JOB: 2002-098

consultant

APPROVED
DIV. OF THE STATE ARCHITECT
OFFICE OF REGULATION SERVICES
APPL. NO. 105719
DATE 6-9-04

agency

SAN RAMON VALLEY CENTER

CONTRA COSTA COMMUNITY COLLEGE DISTRICT

SAN RAMON, CALIFORNIA

owner

tBP project number: 2021200

file name:

drawn by: DW checked by: SA

date: 03-04-04 plot scale: 1:1

Rev:	date:	description:
1	05-26-04	DESIGN CLARIFICATIONS

drawing title: building no.:

MECHANICAL - PARTIAL 2ND FLOOR PLAN

drawing no:

M2.2

drawing of

129

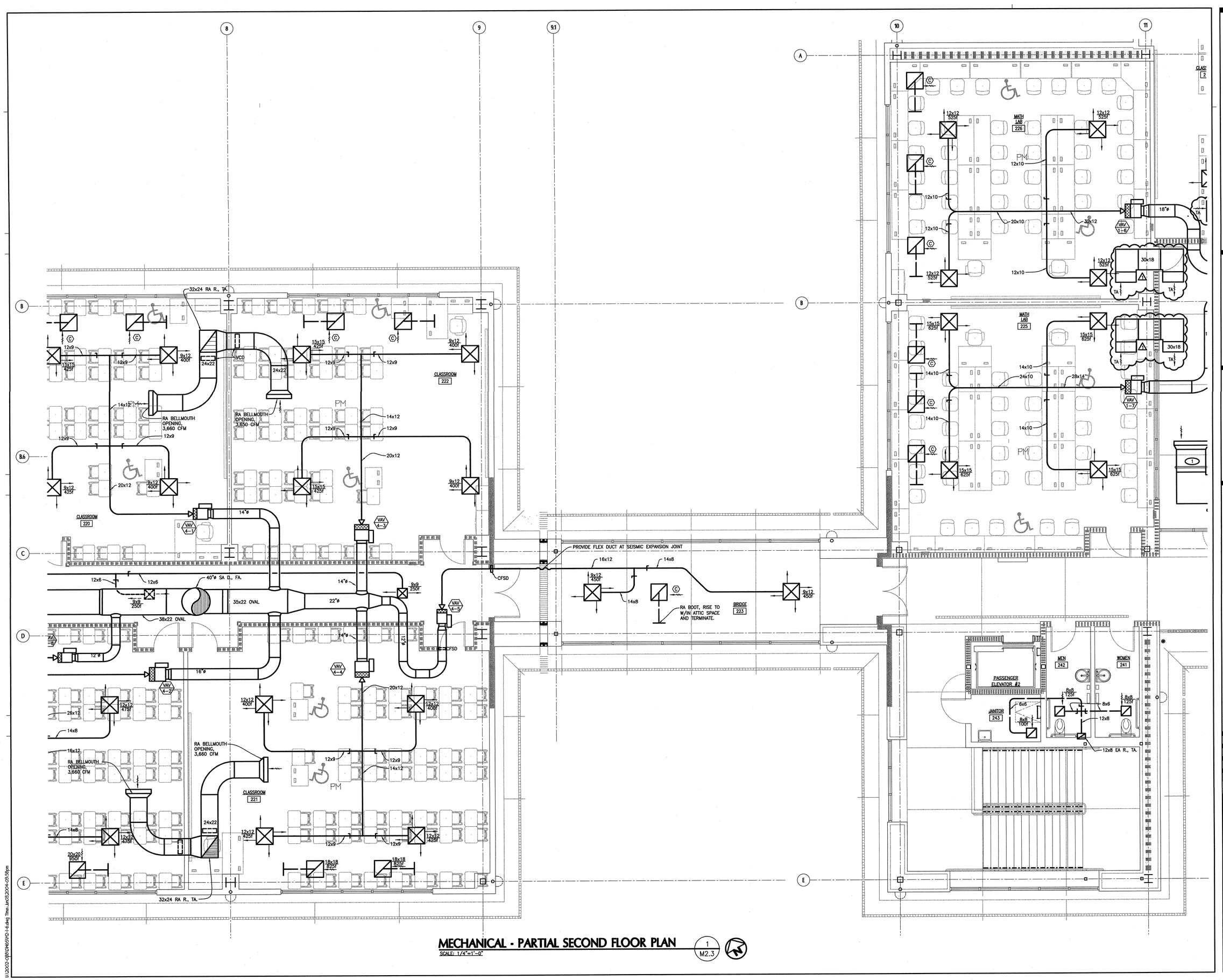

MECHANICAL - PARTIAL SECOND FLOOR PLAN

SCALE: 1/4"=1'-0"

1 / M2.3

tBP architecture planning interiors management

tBP/Architecture
1000 Burnett Ave, Suite 140
Concord, CA 94520
ph: 925.246.6419 fx: 925.246.6495

architect

AINSWORTH ASSOCIATES
MECHANICAL ENGINEERS
SACRAMENTO, CA
JOB: 2002-088

consultant

APPROVED
DIVISION OF THE STATE ARCHITECT
OFFICE OF REGULATION SERVICES
APP. NO. 105719
FILE
DATE 6-9-04

agency

SAN RAMON VALLEY CENTER

CONTRA COSTA COMMUNITY COLLEGE DISTRICT

SAN RAMON, CALIFORNIA

owner

tBP project number : 2021200

file name:

drawn by: DW checked by: SA

date: 03-04-04 plot scale: 1:1

Rev:	date:	description:
1	05-26-04	DESIGN CLARIFICATIONS

drawing title: building no.:

MECHANICAL - PARTIAL 2ND FLOOR PLAN

drawing no.:

M2.3

drawing of

I:\2002-088\DWG\M2-1-6.dwg Time: Jun 03, 2004 - 03:56pm

MECHANICAL - PARTIAL SECOND FLOOR PLAN

SCALE: 1/4"=1'-0"

SHEET NOTE:
1. DUCT BRACE. FOR DETAIL SEE 8/M6.3 OR 10/M6.3

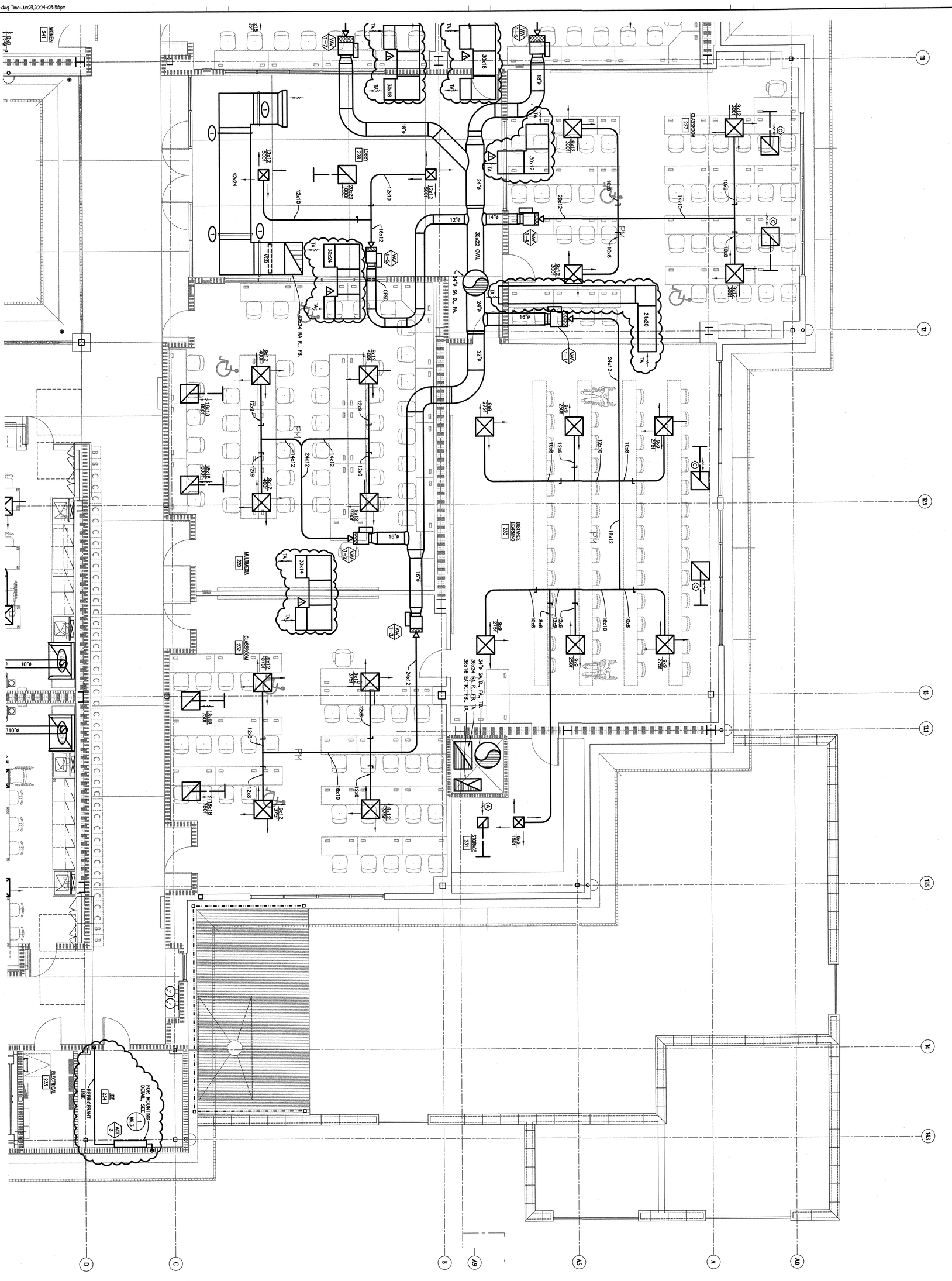

SAN RAMON VALLEY CENTER

CONTRA COSTA COMMUNITY COLLEGE DISTRICT

SAN RAMON, CALIFORNIA

APPROVED
IDENTIFICATION STAMP
DIV. OF THE STATE ARCHITECT
OFFICE OF REGULATION SERVICES
APPL NO. 105719
DATE 6-9-04

AINSWORTH ASSOCIATES
MECHANICAL ENGINEERS
SACRAMENTO, CA
JOB: 2002-088

tBP/Architecture
1000 Burnett Ave, Suite 140
Concord, CA 94520
ph: 925.246.6419 fx: 925.246.6495

tBP
architecture
planning
interiors
management

drawing title: MECHANICAL - PARTIAL 2ND FLOOR PLAN
building no:
drawing no: M2.4
drawing of

Rev:	date:	description:
△	05-26-04	DESIGN CLARIFICATIONS

date: 05-04-04 plot scale: 1:1
drawn by: DN checked by: SA
file name:
tBP project number: 2022.00
owner
agency
consultant
architect

I:\2002-088\DWG\M2-1-6.dwg Time: Jun 03,2004-03:59pm

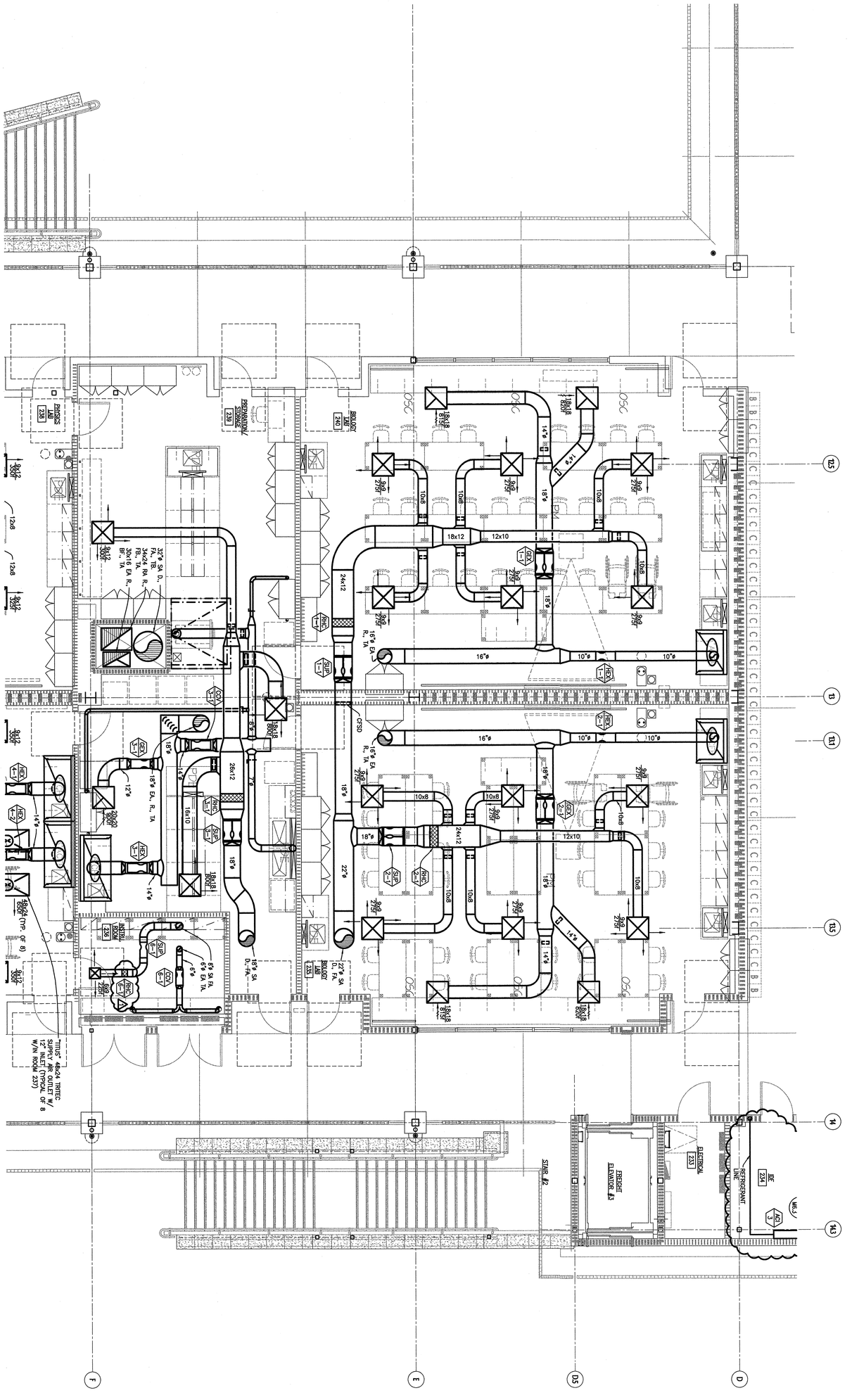

MECHANICAL - PARTIAL SECOND FLOOR PLAN

SCALE: 1/4"=1'-0"

1 / M2.5

drawing title: MECHANICAL - PARTIAL 2ND FLOOR PLAN
building no.:
drawing no.: M2.5 of drawing

Rev. | date: | description:
△ | 05-26-04 | DESIGN CLARIFICATIONS

date: 05-04-04 | plot scale: 1:1
drawn by: DN | checked by: SA
file name:
tBP project number: 2002.00

owner: SAN RAMON VALLEY CENTER
CONTRA COSTA COMMUNITY COLLEGE DISTRICT
SAN RAMON, CALIFORNIA

agency: APPROVED IDENTIFICATION STAMP DIV. OF THE STATE ARCHITECT, OFFICE OF REGULATION SERVICES, APPL NO. 105719, DATE 6-9-04

consultant: DAVID A. WESTON, No. M31220, EXPIRES 12/31/05, MECHANICAL, STATE OF CALIFORNIA
AINSWORTH ASSOCIATES
MECHANICAL ENGINEERS
SACRAMENTO, CA
JOB: 2002-088

architect: RICHARD L. HARRISON, NO. C-8685, REN. 12-31-05, LICENSED ARCHITECT, STATE OF CALIFORNIA
tBP/Architecture
1000 Burnett Ave, Suite 140
Concord, CA 94520
ph: 925.246.6419 fx: 925.246.6495
tBP
architecture
planning
interiors
management

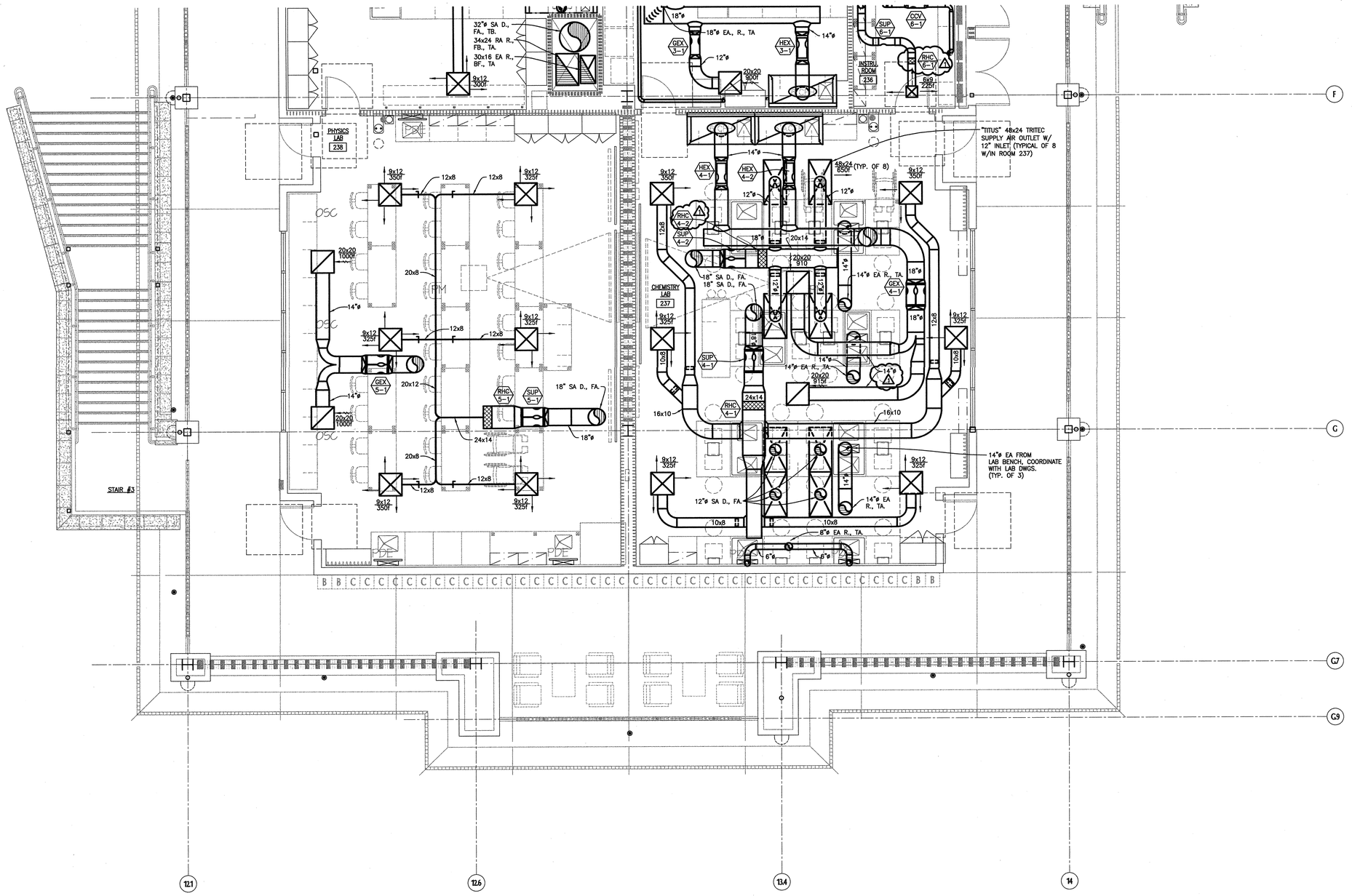

MECHANICAL - PARTIAL SECOND FLOOR PLAN

SCALE: 1/4"=1'-0"

1 / M2.6

tBP architecture planning interiors management

tBP/Architecture
1000 Burnett Ave, Suite 140
Concord, CA 94520
ph: 925.246.6419 fx: 925.246.6495

architect

AINSWORTH ASSOCIATES
MECHANICAL ENGINEERS
SACRAMENTO, CA
JOB: 2002-086

consultant

APPROVED
DIV. OF THE STATE ARCHITECT
OFFICE OF REGULATION SERVICES
APPL NO. 105719
FLS
DATE 6-9-04

agency

SAN RAMON VALLEY CENTER

CONTRA COSTA COMMUNITY COLLEGE DISTRICT

SAN RAMON, CALIFORNIA

owner

tBP project number: 20212.00

file name:

drawn by: DW checked by: SA

date: 03-04-04 plot scale: 1:1

Rev:	date:	description:
1	05-26-04	DESIGN CLARIFICATIONS

drawing title: building no.:

MECHANICAL - PARTIAL 2ND FLOOR PLAN

drawing no.:

M2.6

drawing of

133

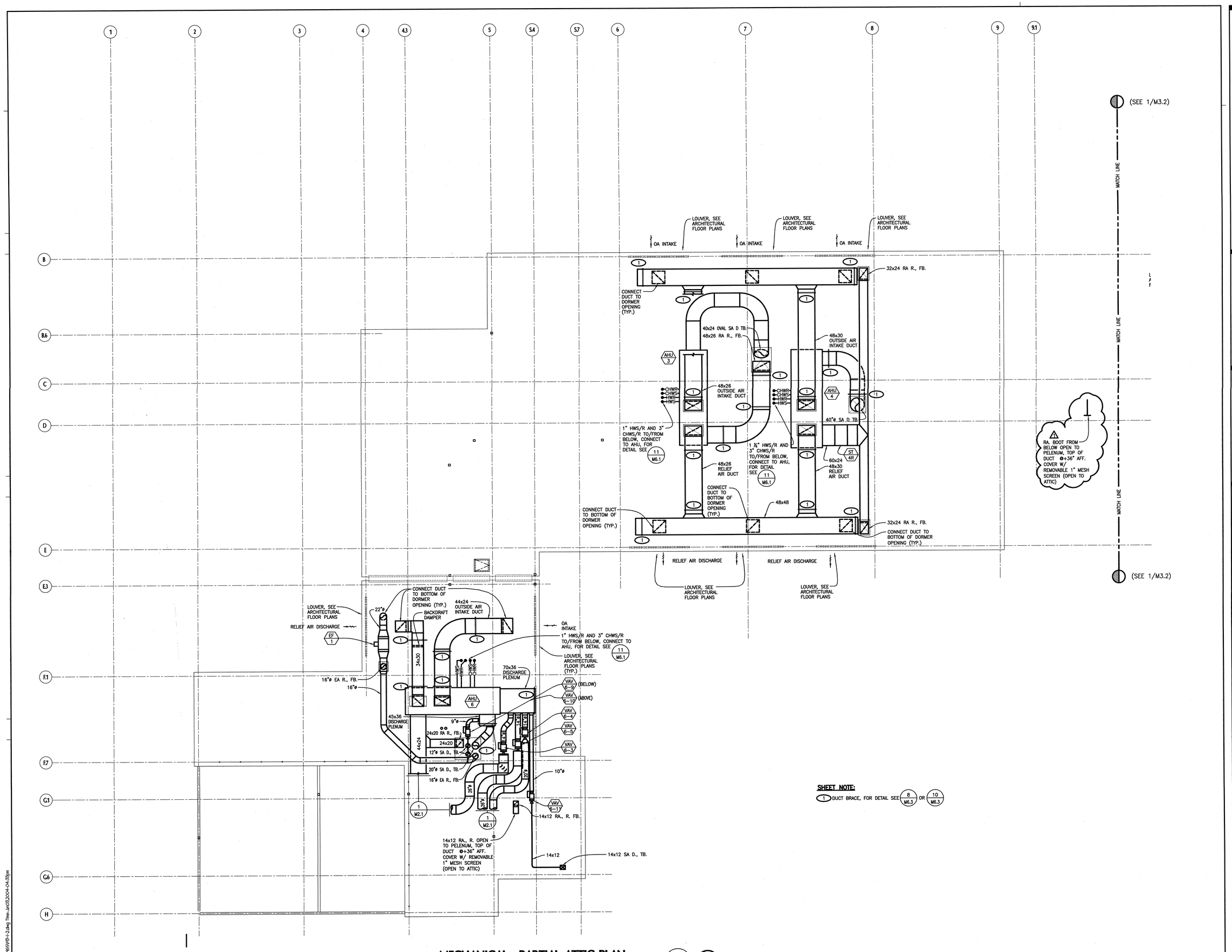

SHEET NOTE:

1. DUCT BRACE, FOR DETAIL SEE 8 M6.3 OR 10 M6.3

MECHANICAL - PARTIAL ATTIC PLAN

SCALE: 1/8"=1'-0"

1 M3.1

tBP architecture planning interiors management

tBP/Architecture
1000 Burnett Ave, Suite 140
Concord, CA 94520
ph: 925.246.6419 fx: 925.246.6495

architect

AINSWORTH ASSOCIATES
MECHANICAL ENGINEERS
SACRAMENTO, CA
JOB: 2002-098

consultant

APPROVED
ON THE STATE ARCHITECT
OFFICE OF REGULATION SERVICES
APPL. NO. 105719
DATE 6-9-04

agency

SAN RAMON VALLEY CENTER

CONTRA COSTA COMMUNITY COLLEGE DISTRICT

SAN RAMON, CALIFORNIA

owner

tBP project number: 2021200

file name:

drawn by: DW checked by: SA

date: 03-04-04 plot scale: 1:1

Rev:	date:	description:
1	05-26-04	DESIGN CLARIFICATIONS

drawing title: building no.:

MECHANICAL - PARTIAL ATTIC PLAN

drawing no.:

M3.1

drawing of

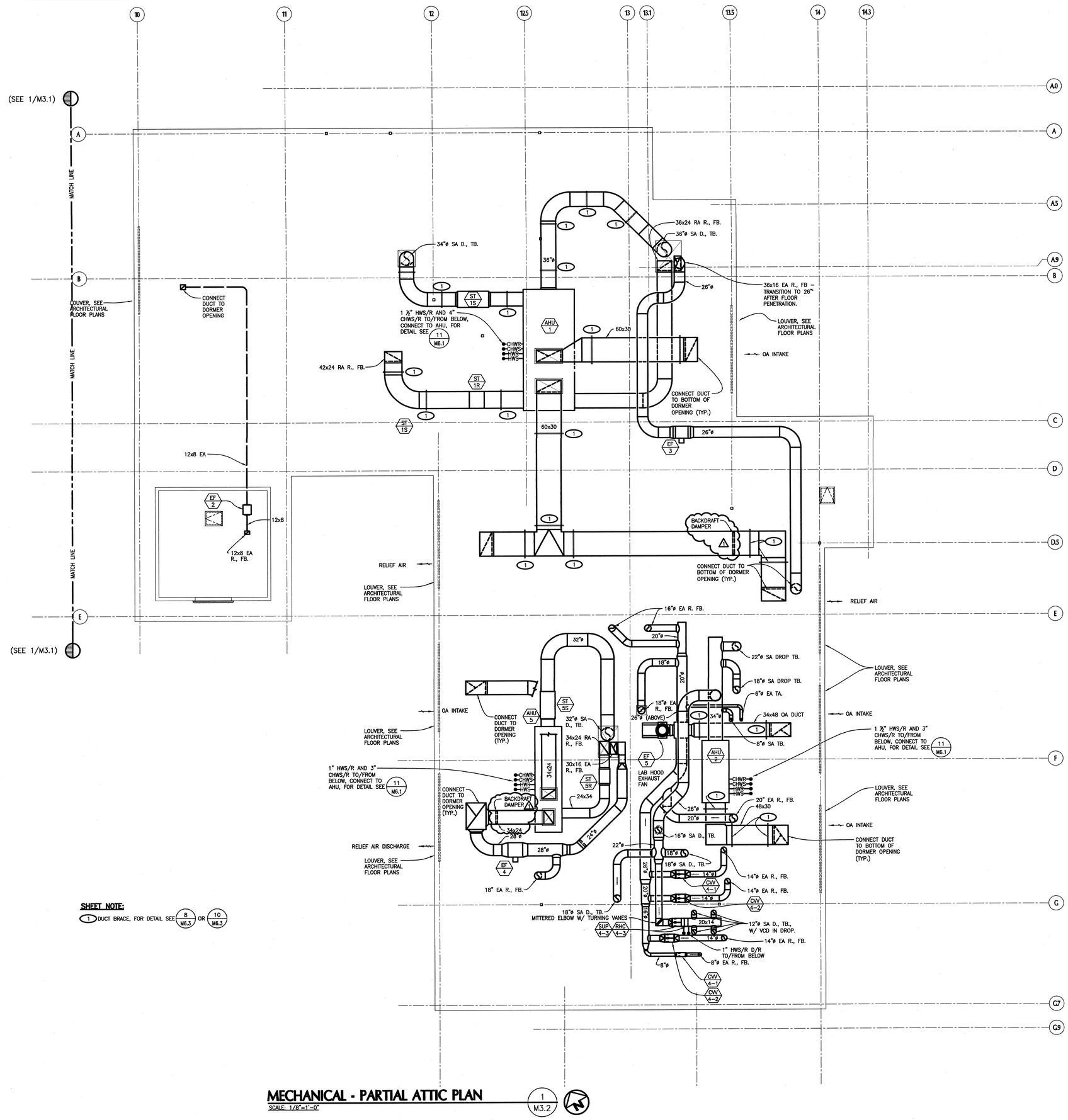

SHEET NOTE:

1 DUCT BRACE, FOR DETAIL SEE 8 M6.3 OR 10 M6.3

MECHANICAL - PARTIAL ATTIC PLAN

SCALE: 1/8"=1'-0"

1 M3.2

tBP architecture planning interiors management

tBP/Architecture
1000 Burnett Ave, Suite 140
Concord, CA 94520
ph: 925.246.6419 fx: 925.246.6495

architect

AINSWORTH ASSOCIATES
MECHANICAL ENGINEERS
SACRAMENTO, CA
JOB: 2002-088

consultant

APPROVED
DEPARTMENT OF STATE ARCHITECT
OFFICE OF REGULATION SERVICES
APPL. NO. 105719
DATE 6-9-04

agency

SAN RAMON VALLEY CENTER

CONTRA COSTA COMMUNITY COLLEGE DISTRICT

SAN RAMON, CALIFORNIA

owner

tBP project number: 2021200

file name:

drawn by: DW checked by: SA

date: 03-04-04 plot scale: 1:1

Rev:	date:	description:
1	05-26-04	DESIGN CLARIFICATIONS

drawing title: building no.:

MECHANICAL - PARTIAL ATTIC PLAN

drawing no.: M3.2

drawing of

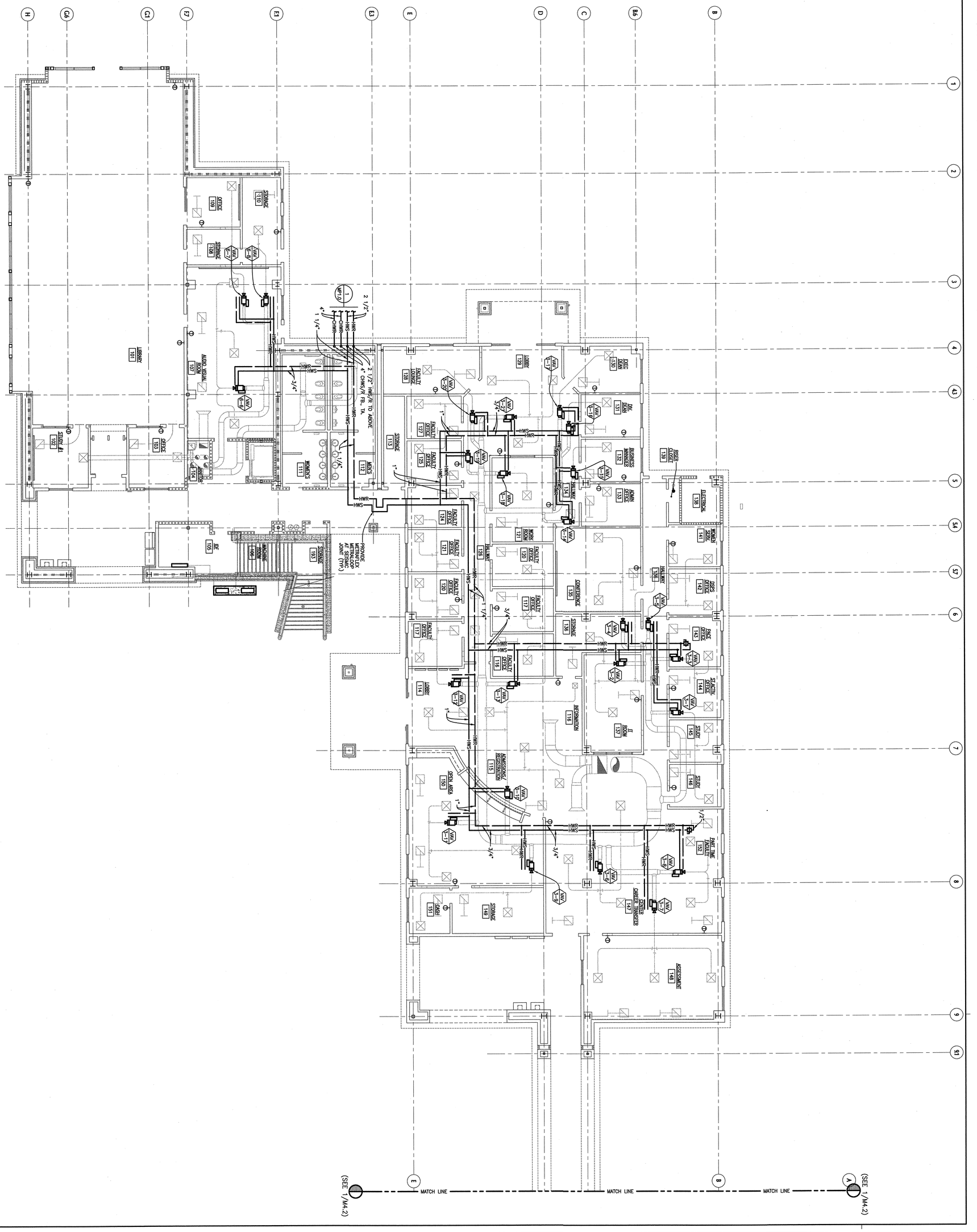
MATCH LINE
(SEE 1/M4.2)
MATCH LINE
MATCH LINE
(SEE 1/M4.2)
LOBBY 101
AUDIO VISUAL ROOM 107
STORAGE 110
OFFICE 109
STORAGE 108
STUDY LT 102
OFFICE 103
WOMEN'S 111
MEN'S 112
JC 105
MACHINE ROOM 106
STORAGE 113
FACULTY OFFICE 127
FACULTY LOUNGE 128
LOBBY 129
EXEC ADMIN 130
DIV ADMIN 131
BUSINESS MANAGER 132
ADMIN OFFICE 133
BOARD CHAMBERS 139
ELECTRICAL 138
WOMEN'S LOCKER 141
FACULTY OFFICE 125
FACULTY OFFICE 124
FACULTY OFFICE 121
WORK ROOM 122
FACULTY OFFICE 120
HALLWAY 123
HALLWAY 136
CONFERENCE 135
DEAN'S OFFICE 142
FACULTY OFFICE 117
STORAGE 136
FACULTY OFFICE 116
FACULTY OFFICE 118
SELECTIVE OFFICE 144
STUDY 145
STUDY 146
LOBBY 114
INFORMATION 116
IT ROOM 137
ADMISSIONS/ REGISTRATION 115
OPEN AREA 150
PART TIME FACULTY 152
SIGNS 151
STORAGE 149
COUNTER CAREER TRANSFER 147
ASSESSMENT 148
PROVIDE MECHANICAL METER AT SEISMIC JOINT (TYP.)
2 1/2" CHWS/R, FB., TA.
2 1/2" HWS/R TO ABOVE
4" CHWS/R
1 1/4"
1"
3/4"
1/2"
HWR
HWS
CHWR
CHWS
VAV 1-1
VAV 1-2
VAV 1-3
VAV 1-4
VAV 1-5
VAV 1-6
VAV 1-7
VAV 1-8
VAV 1-9
VAV 1-10
VAV 1-11
VAV 1-12
VAV 1-13
VAV 1-14
VAV 1-15
VAV 1-16
VAV 1-17
VAV 1-18
VAV 1-19
VAV 1-20
VAV

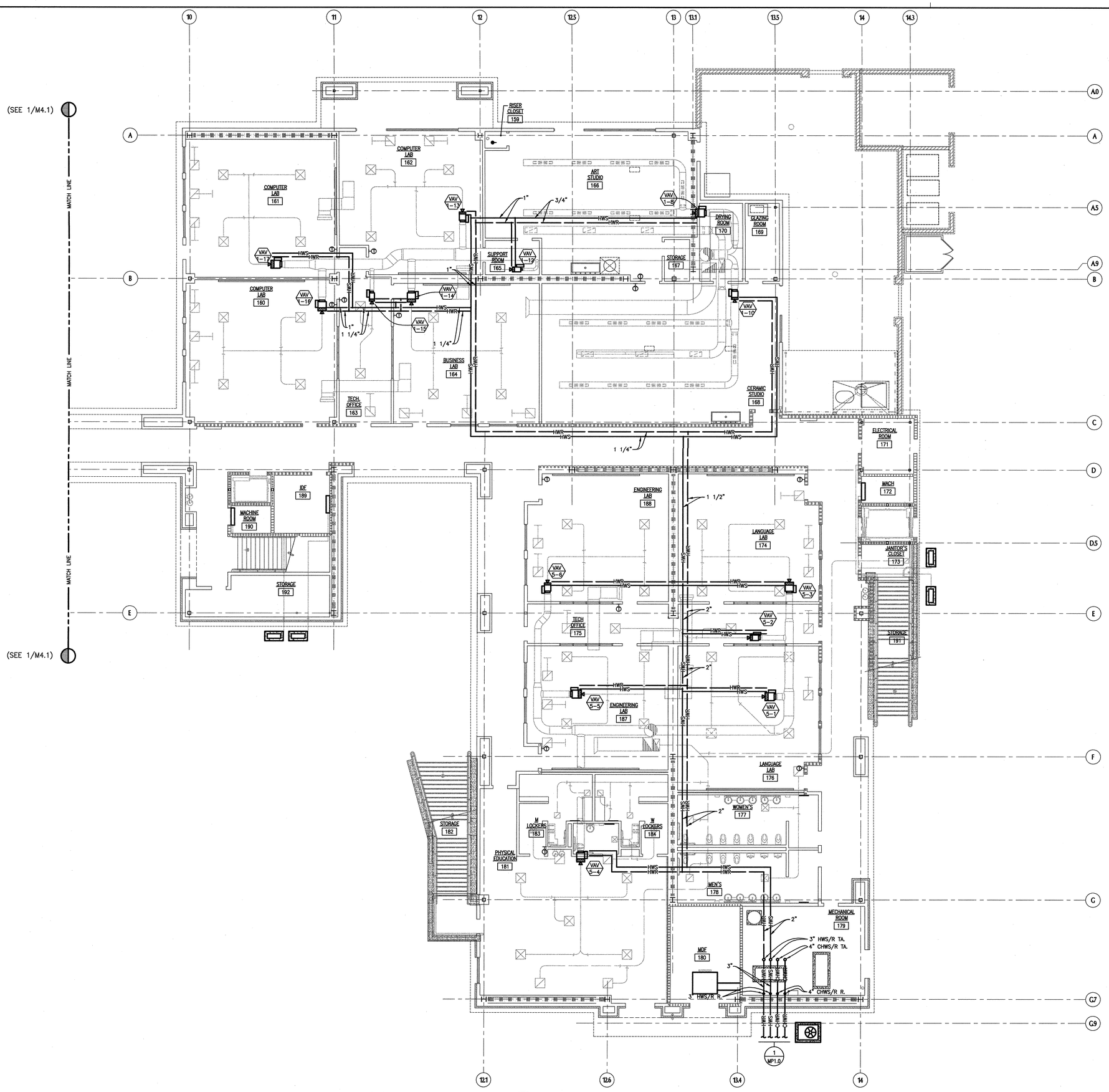

MECHANICAL - PARTIAL 1ST FLOOR HYDRONIC PLAN

SCALE: 1/8"=1'-0"

1 / M4.2

tBP
architecture
planning
interiors
management

tBP/Architecture
1000 Burnett Ave, Suite 140
Concord, CA 94520
ph: 925.246.6419 fx: 925.246.6495

architect

AINSWORTH ASSOCIATES
MECHANICAL ENGINEERS
SACRAMENTO, CA

consultant

APPROVED
DEPARTMENTAL STAMP
DIV. OF STATE ARCHITECT
OFFICE OF REGULATION SERVICES
APPL. NO. 12S719
DATE 5-27-04

agency

SAN RAMON VALLEY CENTER

CONTRA COSTA COMMUNITY COLLEGE DISTRICT

SAN RAMON, CALIFORNIA

owner

tBP project number :	2021.00
file name:	
drawn by: DW	checked by: SA
date: 03-04-04	plot scale: 1:1

Rev:	date:	description:
1	05-26-04	DESIGN CLARIFICATIONS

drawing title: MECHANICAL-PARTIAL 1ST FLOOR HYDRONIC PLAN

building no.:

drawing no.: M4.2

drawing of

I:\2020\2-0\BIDWKG\M4-1-2.dwg Time: Jun 03,2004-03:45pm

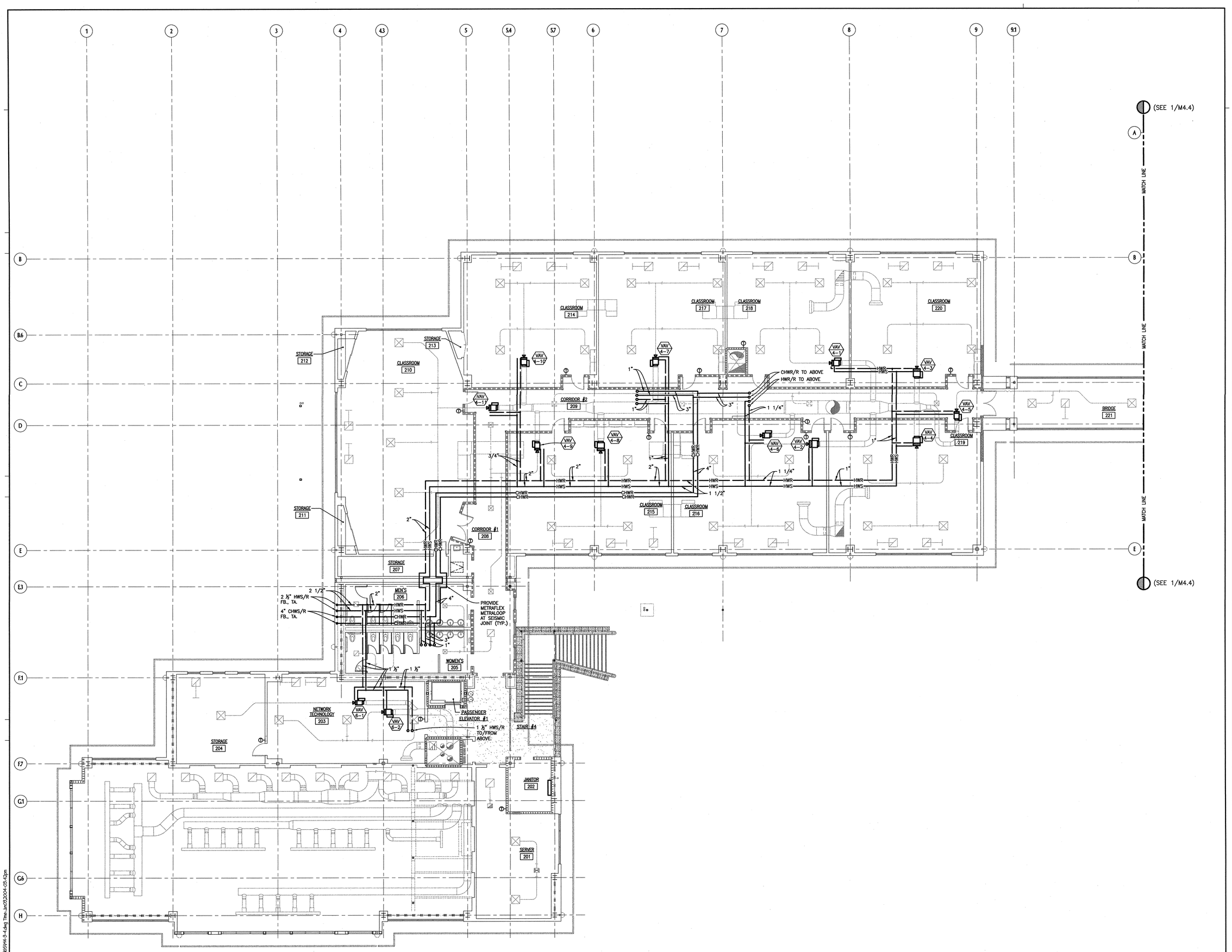

MECHANICAL - PARTIAL 2ND FLOOR HYDRONIC PLAN

SCALE: 1/8"=1'-0"

1 / M4.3

tBP architecture planning interiors management

tBP/Architecture
1000 Burnett Ave, Suite 140
Concord, CA 94520
ph: 925.246.6419 fx: 925.246.6495

architect

AINSWORTH ASSOCIATES
MECHANICAL ENGINEERS
SACRAMENTO, CA
JOB: 2002-088

consultant

agency

SAN RAMON VALLEY CENTER

CONTRA COSTA COMMUNITY COLLEGE DISTRICT

SAN RAMON, CALIFORNIA

owner

tBP project number : 20212.00

file name:

drawn by: DW checked by: SA

date: 03-04-04 plot scale: 1:1

Rev:	date:	description:
1	05-26-04	DESIGN CLARIFICATIONS

drawing title: building no.:

MECHANICAL-PARTIAL 2ND FLOOR HYDRONIC PLAN

drawing no.:

M4.3

drawing of

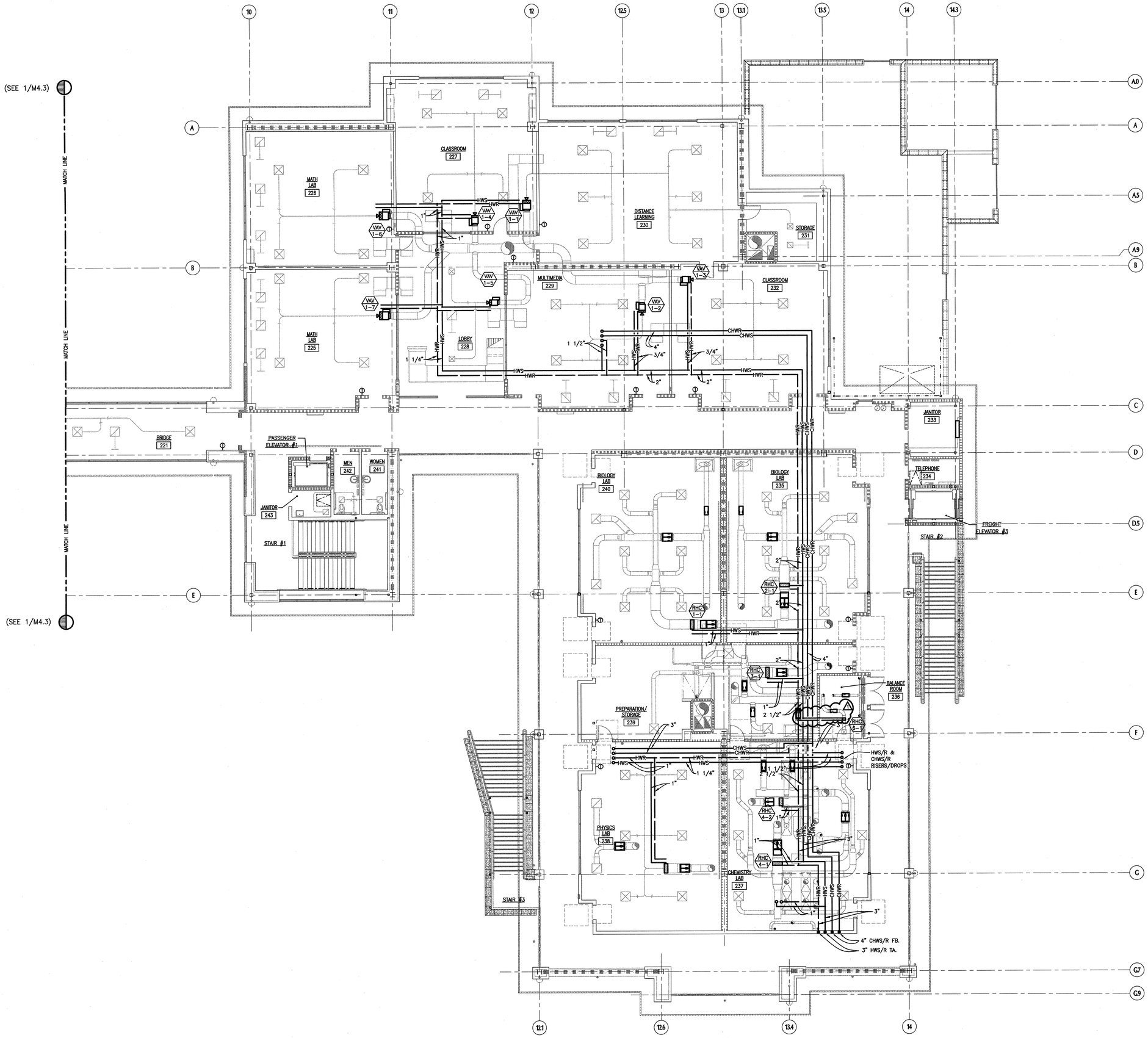

MECHANICAL - PARTIAL 2ND FLOOR HYDRONIC PLAN

SCALE: 1/8"=1'-0"

1 / M4.3

tBP architecture planning interiors management

tBP/Architecture
1000 Burnett Ave, Suite 140
Concord, CA 94520
ph: 925.246.6419 fx: 925.246.6495

architect

AINSWORTH ASSOCIATES
MECHANICAL ENGINEERS
SACRAMENTO, CA
JOB: 2002-086

consultant

APPROVED
DIV. OF THE STATE ARCHITECT
OFFICE OF REGULATION SERVICES
APPL. NO. 105719
AC
FLS.
DATE 8-9-04

agency

SAN RAMON VALLEY CENTER

CONTRA COSTA COMMUNITY COLLEGE DISTRICT

SAN RAMON, CALIFORNIA

owner

tBP project number : 20212.00

file name:

drawn by: DW checked by: SA

date: 03-04-04 plot scale: 1:1

Rev:	date:	description:
1	05-26-04	DESIGN CLARIFICATIONS

drawing title: building no.:

MECHANICAL-PARTIAL 2ND FLOOR HYDRONIC PLAN

drawing no.:

M4.4

drawing of

U:\2002-086\DWGS\M4-3-4.dwg Time:Jun03,2004-03:42pm

139

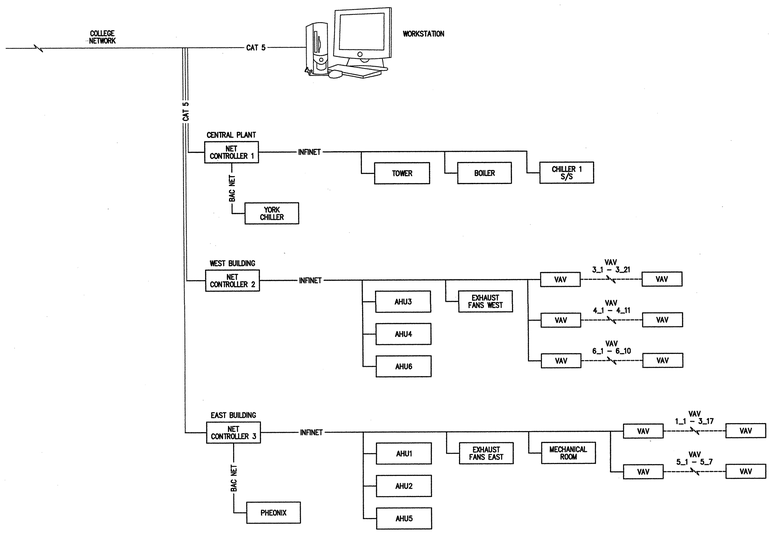

CONTROL RISER DIAGRAM

NO SCALE

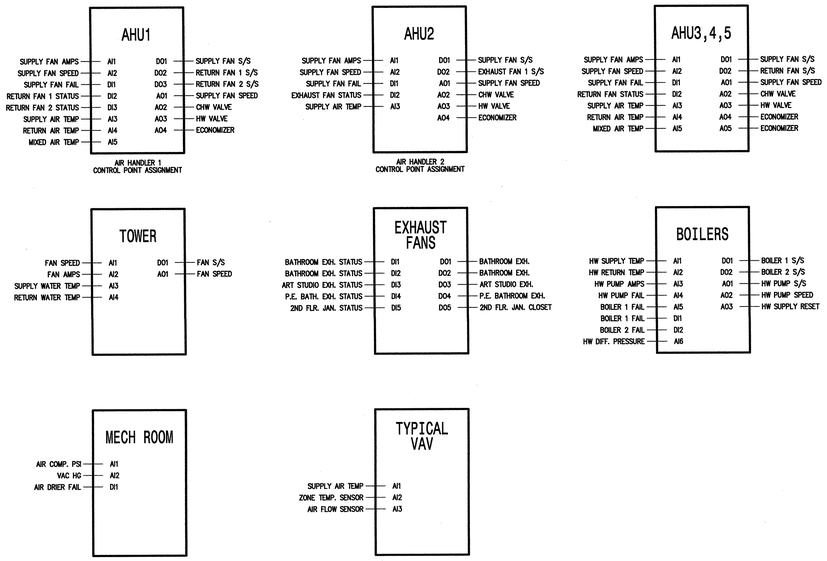

CONTROLLER LAYOUTS

NO SCALE

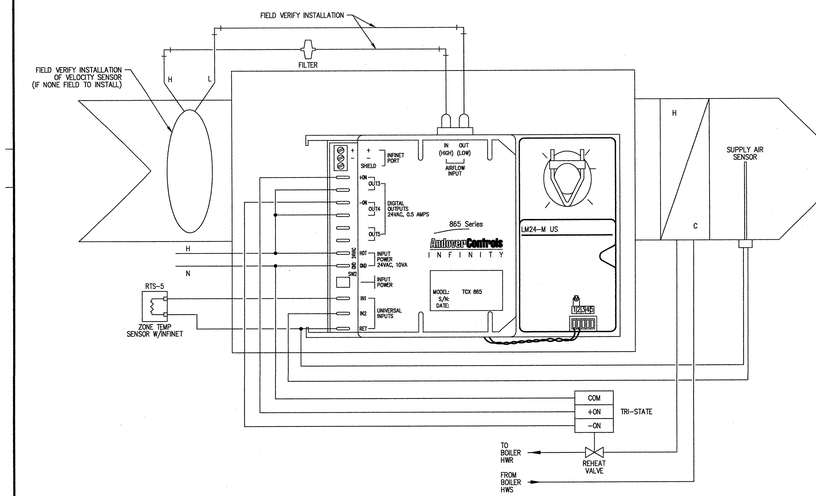

VAV WITH HOT WATER REHEAT VALVE

NO SCALE

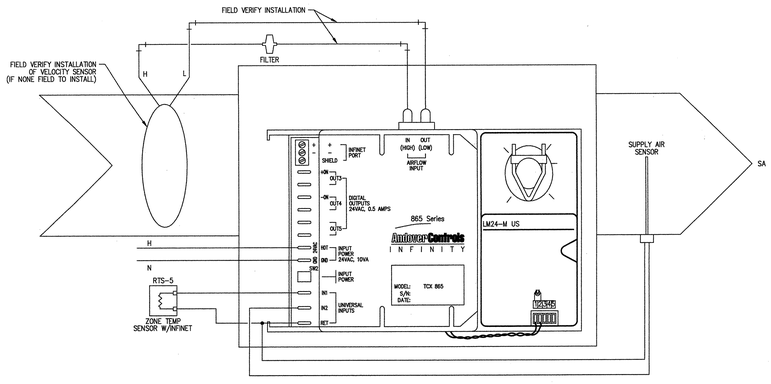

VAV WITHOUT HOT WATER REHEAT VALVE

NO SCALE

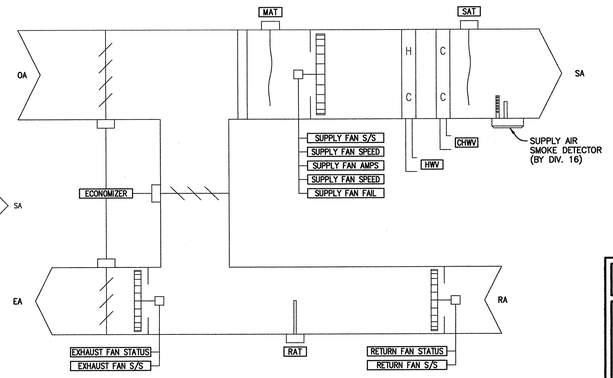

AHU 1

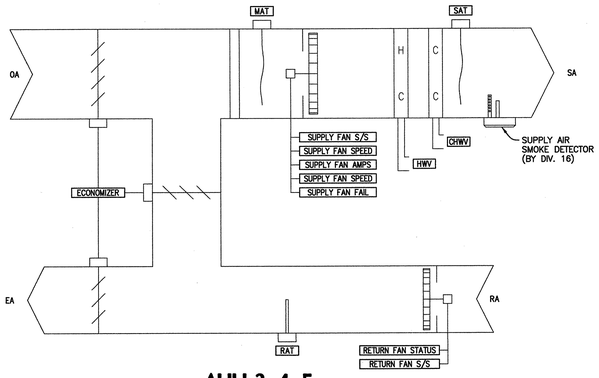

AHU 3, 4, 5

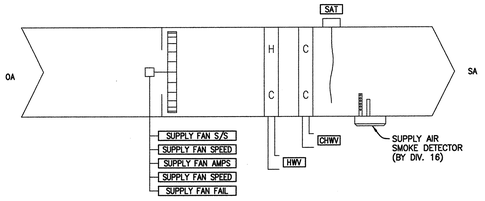

AHU 2

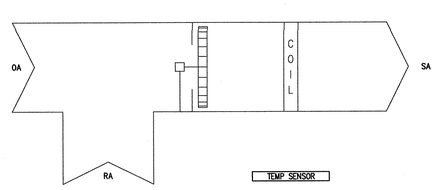

AC SPLIT SYSTEM

SEQUENCE OF OPERATIONS

SEQUENCE OF OPERATION

AIR HANDLING UNITS: AHU–1, 2, 3, 4, AND 5 EACH AHU SHALL HAVE A UNIQUE AND ADJUSTABLE SCHEDULE.

THE OCCUPIED SCHEDULE WILL BE INITIALLY SET AS FOLLOWS:
AHU–1, 3, 4, & 5 – 6AM TO 11PM, AHU–2 – 24 HOUR/DAY (LABRATORY)

VAV BOXES FOR EACH FLOOR SHALL HAVE SCHEDULES AS FOLLOWS:

A. LAB UNITS WILL RUN CONTINUOUSLY, OTHERS WILL BE OFF DURING THE UNOCCUPIED MODE AND ALL BUSINESS HOLIDAYS.

B. THE HEATING SETPOINT FOR EACH ZONE WILL BE 70 DEG. F. THE SETPOINT WILL BE OPERATOR ADJUSTABLE. THE OPERATOR WILL ALSO BE ABLE TO ASSIGN A RANGE OF HEATING SETPOINT TEMPERATURE (I.E., 68 TO 72) THAT WILL ALLOW THE OCCUPANT TO CHOOSE THE ACTUAL HEATING SETPOINT BY ADJUSTING THE SPACE TEMPERATURE SENSOR.

C. THE COOLING SETPOINT FOR EACH ZONE WILL BE 74 DEG. F. THE SETPOINT WILL BE OPERATOR ADJUSTABLE. THE OPERATOR WILL ALSO BE ABLE TO ASSIGN A RANGE OF COOLING SETPOINT TEMPERATURES (I.E., 72 TO 76) THAT WILL ALLOW THE OCCUPANT TO CHOOSE THE ACTUAL COOLING SETPOINT. THE COOLING SETPOINT WILL ALWAYS BE 4 DEG. HIGHER THAN THE HEATING SETPOINT.

D. THE UNOCCUPIED HEATING SETPOINT WILL BE 55 DEG. F AND THE UNOCCUPIED COOLING SETPOINT WILL BE 90 DEG. F. THESE SETPOINTS WILL BE OPERATOR ADJUSTABLE THE UNIT WILL CYCLE ON TO RAISE OR LOWER THE AVERAGE SPACE TEMPERATURE 3 DEG. AND THEN CYCLE OFF IF THE NIGHT SETBACK TEMPERATURE IS REACHED. A NIGHT PURGE CYCLE SHALL START FAN SYSTEMS AND RUN ON ECONOMIZERS IF OAT IS LESS THAT ROOM TEMPERATURE BY MORE THAN 10 DEG. F (AFTER 1:00 AM ONLY, PRIOR TO OCCUPIED DAY) ONLY.

E. EACH UNIT WILL HAVE AN INDIVIDUAL OPTIMAL START ROUTINE EXECUTED EACH TIME THE UNIT SWITCHES INTO THE OCCUPIED MODE. THIS ROUTINE WILL COMPARE THE OUTSIDE AIR TEMPERATURE AND THE AVERAGE SPACE TEMPERATURE TO DETERMINE WHAT TIME TO START THE UNIT SO THAT THE AVERAGE SPACE TEMPERATURE IS 69 DEG. F AT THE START OF THE OCCUPIED PERIOD IF THE UNIT IS IN THE HEATING MODE. IF THE UNIT IS IN THE COOLING MODE, THE OPTIMAL START ROUTINE WILL HAVE THE AVERAGE SPACE TEMPERATURE AT 72 DEG. F AT THE BEGINNING OF THE OCCUPIED PERIOD.

F. THE OUTSIDE AND EXHAUST AIR DAMPERS WILL BE COMPLETELY CLOSED DURING THE OPTIMAL START PERIOD UNLESS THE ECONOMIZER CAN BE USED FOR COOLING, A NIGHT PURGE CYCLE SHALL START FAN SYSTEMS AND RUN ON ECONOMIZERS IF OAT IS LESS THAN ROOM TEMPERATURE BY MORE THAN 10 DEG. F (AFTER 1:00 AM ONLY, PRIOR TO OCCUPIED DAY) ONLY.

G. THE OUTSIDE AND EXHAUST AIR DAMPERS WILL BE COMPLETELY CLOSED DURING THE UNOCCUPIED PERIOD.

H. THE EMS WILL MODULATE THE HOT WATER VALVE ON EACH REHEAT COIL TO MAINTAIN THE SPACE TEMPERATURE SETPOINT.

I. THE EMS WILL MODULATE THE HOT WATER VALVE ON EACH REHEAT COIL TO MAINTAIN THE SPACE TEMPERATURE SETPOINT. THE DISCHARGE AIR TEMPERATURE WILL BE RESET BASED ON THE WARMEST ZONE, AFTER FAN HAS REACHED ITS MINIMUM SPEED.

J. THE EMS WILL MODULATE THE OUTSIDE AIR DAMPERS TO MAINTAIN THE DISCHARGE AIR TEMPERATURE SETPOINT BEFORE OPENING THE CHILLED WATER VALVE. IF THE DISCHARGE AIR TEMPERATURE CANNOT BE MAINTAINED, THE EMS WILL BEGIN TO MODULATE THE CHILLED WATER VALVE OPEN. IF THE OUTSIDE AIR TEMPERATURE IS LESS THAT THE RETURN AIR TEMPERATURE, THE OUTSIDE AIR DAMPERS WILL BE CONTROLLED TO MAINTAIN TARGET SUPPLY AIR TEMPERATURE INTO MIXED AIR SECTION. IF THE RETURN AIR TEMPERATURE IS LESS THAT THE OUTSIDE AIR TEMPERATURE THE OUTSIDE AIR DAMPERS WILL BE IN THE MINIMUM POSITION.

K. THE MINIMUM POSITION OF THE OUTSIDE AIR DAMPERS WILL BE BASED ON MAINTAINING RA/OA DIFFERENTIAL CO PPM AT 700 MAX, BUT NOT LESS THAN DESIGN OA CFM (SF FLOW–RF FLOW).

L. THERE WILL BE AN OPERATOR ADJUSTABLE ECONOMIZER LOCKOUT TEMPERATURE SETPOINT IF THE OUTSIDE AIR TEMPERATURE IS GREATER THAT THE LOCKOUT TEMPERATURE, THE OUTSIDE AIR DAMPERS WILL BE IN THE MINIMUM POSITION. IF THE OUTSIDE AIR TEMPERATURE IS LESS THAT THE LOCKOUT TEMPERATURE THE EMS WILL COMPARE THE OUTSIDE AIR TEMPERATURE AND THE RETURN AIR TEMPERATURE AS DESCRIBED ABOVE.

M. EACH SPACE TEMPERATURE SENSOR WILL BE EQUIPPED WITH AN INTEGRAL OVERRIDE BUTTON. THE UNIT WILL SWITCH INTO THE OCCUPIED MODE WHEN PRESSED BY THE OCCUPANT. THE EMS WILL KEEP THE VAV BOXES CLOSED IN ALL ZONES THAT HAVE NOT BEEN OVERRIDDEN. THE OVERRIDE TIME WILL BE OPERATOR DEFINED. THE OPERATOR WILL HAVE THE CAPABILITY TO DISABLE THE OVERRIDE FEATURE ON ANY SPECIFIC ZONE.

N. THE EMS WILL MODULATE EACH VAV BOX TO MAINTAIN THE SPACE TEMPERATURE SETPOINT. EACH VAV BOX WILL HAVE AN OPERATOR DEFINED MINIMUM AIRFLOW SETPOINT. IF THE HEATING SETPOINT CANNOT BE MAINTAINED AT THE MINIMUM AIRFLOW SETPOINT, THE VAV BOX WILL OPEN TO THE REHEAT AIRFLOW SETPOINT AND THE EMS WILL MODULATE THE VALVE ON THE REHEAT COIL TO MAINTAIN THE HEATING TEMPERATURE SETPOINT.

O. THE REHEAT AIRFLOW SETPOINT WILL BE OPERATOR ADJUSTABLE AND IT WILL BE INDEPENDENT OF THE MINIMUM AIRFLOW SETPOINT.

P. ALL VAV BOXES WILL OPERATE AS PRESSURE INDEPENDENT CONTROLS. THE ACTUAL AIRFLOW THROUGH THE VAV BOX WILL BE SHOWN ON THE OPERATOR'S DISPLAY.

Q. EACH VAV BOX WILL HAVE A MAXIMUM AIRFLOW SETPOINT. THE EMS WILL MODULATE THE VAV BOX SO THAT THIS MAXIMUM AIRFLOW IS NOT EXCEEDED. THE MAXIMUM AIRFLOW SETPOINT WILL BE OPERATOR DEFINED.

R. THE EMS WILL MODULATE THE VARIABLE SPEED DRIVE ON THE SUPPLY FAN TO MAINTAIN THE DUCT STATIC PRESSURE SETPOINT ON ALL AHUS. THE DUCT STATIC PRESSURE SETPOINT WILL BE OPERATOR ADJUSTABLE. BELOW 60 DEG. F OAT, VFD SHALL BE AT A MINIMUM SPEED EXCEPT DURING WARM–UP OR NIGHT PURGE.

S. THE RETURN FAN SHALL BE CONTROLLED TO MAINTAIN SF FLOW MINUS MINIMUM OA FLOW.

T. A MINIMUM OF 10 LOAD MANAGEMENT STRATEGIES SHALL BE PROGRAMMED (AUTOMATIC WITH MANUAL TOGGLE TO INITIATE). KW INFO WILL BE USED AS INPUT FOR DEMAND LIMITING.

U. VAV BOXES WITHIN COOKING AREAS SHALL MODULATE TO MAINTAIN SPACE TEMPERATURE AND EQUAL PRESSURE WITHIN THE SPACE. BOXES SHALL TRACK AND INTERCONNECT WITH KITCHEN HOOD EXHAUST FANS AND AHU–4.

DOMESTIC HOT WATER PUMP:

A. THE DOMESTIC HOT WATER PUMP WILL BE "OFF" DURING THE UNOCCUPIED MODE AND ALL SCHOOL HOLIDAYS.

LABRATORY SYSTEMS:

A. THE LABORATORY AIRFLOW CONTROL SYSTEM SHALL RUN CONTINUOUSLY.

B. SUPPLY AIR TEMPERATURE CONTROL: THE DIGITAL CONTROLLER WILL SENSE THE ZONE TEMPERATURE THE DC WILL MODULATE THE REHEAT VALVE AND IN SEQUENCE SEND A MODULATING SIGNAL TO THE LAB CONTROLLER FOR COOLING IN ORDER TO MAINTAIN THE ZONE TEMPERATURE SET POINT OF 72F (ADJUSTABLE).

C. LAB CONTROL: THE DC SHALL RECEIVE AN 0–10 VDC ANALOG SIGNAL FROM THE LAB CONTROLLER THAT WILL INDICATE THE TOTAL EXHAUST CFM FROM THE ROOM. THE DC SHALL RECEIVE A BINARY SIGNAL FROM THE LAB CONTROLLER IF THE LAB CONTROLLER GOES INTO ALARM. THIS ALARM SHALL BE DISPLAYED AT THE OPERATOR WORK STATION.

SAFETY INTERLOCKS

SAFETY INTERLOCKS:

1. UPON DETECTION OF SMOKE WITHIN THE SUPPLY AIR STREAM, THE SUPPLY AIR FAN SHALL SHUT DOWN AND ALL DAMPERS SHALL GO TO A 100% RETURN AIR POSITION.
2. A LOW TEMPERATURE LIMIT ALARM SHALL SHUT DOWN BOTH FANS AND GENERATE A FMS ALARM.
3. WHEN FANS SHUT DOWN ALL COMBINATION FIRE/SMOKE DAMPERS SHALL CLOSE.
4. DIRTY FILTERS STATUS SHALL ALSO GENERATE A FMS ALARM.

tBP architecture planning interiors management

tBP/Architecture
1000 Burnett Ave, Suite 140
Concord, CA 94520
ph: 925.246.6419 fx: 925.246.6495

architect

AINSWORTH ASSOCIATES
MECHANICAL ENGINEERS
SACRAMENTO, CA
(25) 2002-089

consultant

APPROVED
FOR BUILDING PERMIT
DIV. OF THE STATE ARCHITECT
OFFICE OF REGIONAL SERVICES
APPL. NO. 105119
BY: [signature]
DATE: 6-1-04

agency

SAN RAMON VALLEY CENTER
CONTRA COSTA COMMUNITY COLLEGE DISTRICT
SAN RAMON, CALIFORNIA

owner

tBP project number : 20212.00
file name:
drawn by: DM checked by: SA
date: 03-01-04 plot scale: 1:1

Rev:	date:	description:
1	05-26-04	DESIGN CLARIFICATIONS

drawing title: MECHANICAL- CONTROL DIAGRAMS
building no:
drawing no: M5.1
drawing of

I:\2002-089\DWG\M5-1-2.dwg Time: Jun 03 2004 - 02:59pm

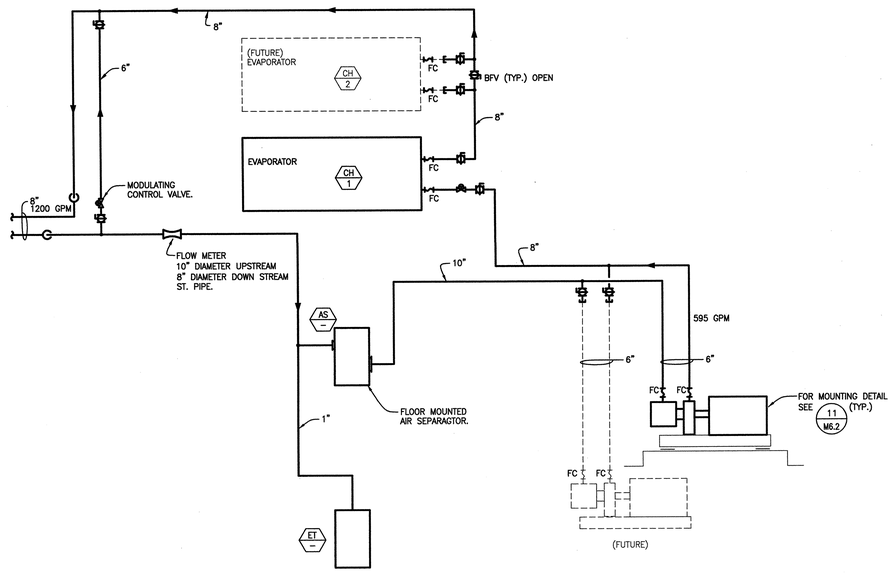

CHILLED WATER PIPING DIAGRAM

NO SCALE:

NOTE: ① PROVIDE UNIONS AT EACH VALVE OR DEVICE.
② SUPPORT DROPS TO PUMPS FROM FLOOR INDEPENDENT OF PUMP.

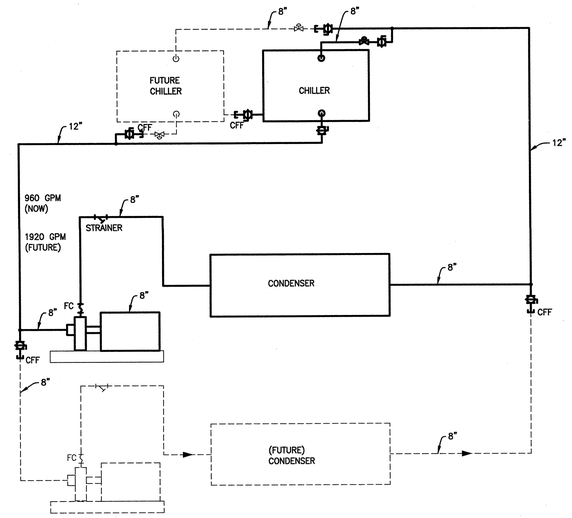

CONDENSER PIPING DIAGRAM

NO SCALE:

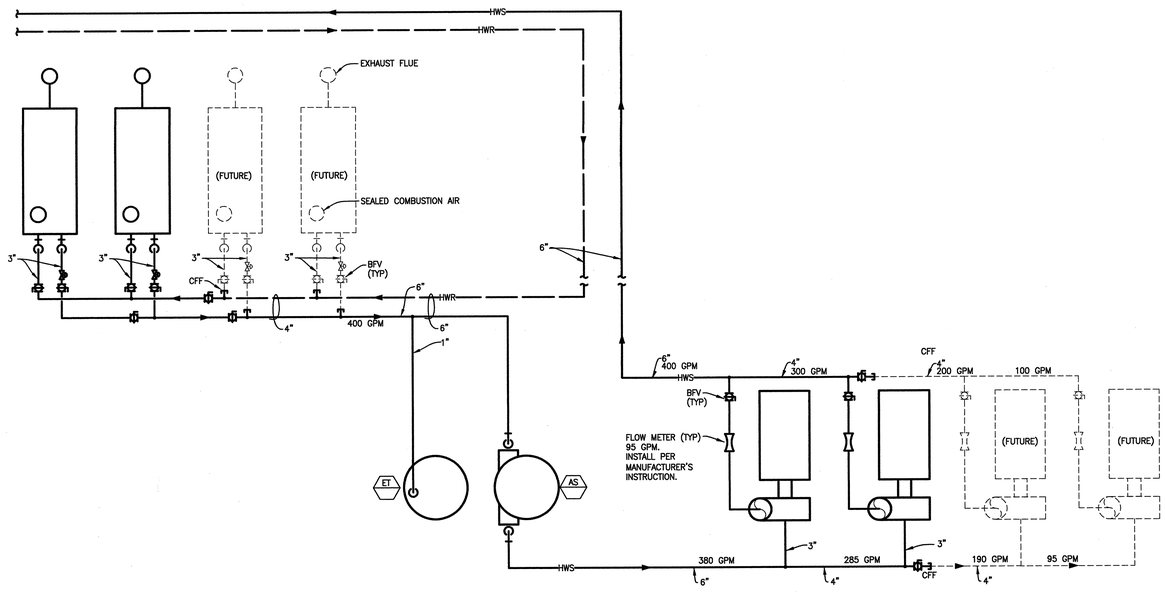

HEATING WATER PIPING DIAGRAM

NO SCALE:

NOTE: ① SUPPORT VERTICAL DROP PIPING FROM FLOOR INDEPENDENT OF EQUIPMENT CONNECTION FLANGES OR PUMP VOLUTE FLANGES.
② PROVIDE UNIONS AT EACH VALVE OR DEVICE.

tBP
architecture
planning
interiors
management

tBP/Architecture
1000 Burnett Ave, Suite 140
Concord, CA 94520
ph: 925.246.6419 fx: 925.246.6495

architect

AINSWORTH ASSOCIATES
MECHANICAL ENGINEERS
SACRAMENTO, CA
(916) 2002-080

consultant

APPROVED
DEPARTMENT OF STATE ARCHITECT
DIVISION OF REGULATION SERVICES
APPL NO. 120119
DATE 6-7-04

agency

SAN RAMON VALLEY CENTER

CONTRA COSTA COMMUNITY COLLEGE DISTRICT

SAN RAMON, CALIFORNIA

owner

tBP project number : 20212.00
file name:
drawn by: DW checked by: SA
date: 03-09-04 plot scale: 1:1

Rev:	date:	description:
1	05-26-04	DESIGN CLARIFICATIONS

drawing title: MECHANICAL-PIPING DIAGRAMS

building no.:

drawing no.: M5.2

drawing of

I:\2002-080\DWG\M5-1-2.dwg Time: Jun 03, 2004 - 02:59pm

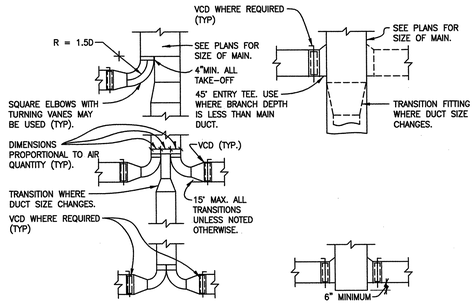

NOTE: DETAIL APPLICABLE WHERE BRANCH AIR QUANTITIES ARE 1,000 CFM OR MORE.

LARGE BRANCH DUCT

NOTE: DETAIL APPLICABLE WHERE BRANCH AIR QUANTITIES ARE LESS THAN 1,000 CFM

SMALL BRANCH DUCT

(LOW VELOCITY 1300 FPM, DUCT SYSTEMS ONLY.)

NOTE: DUCT SYSTEMS NOT INSTALLED IN ACCORDANCE WITH THIS DETAIL WILL BE REJECTED.

LOW VELOCITY BRANCH DUCT TAKE-OFF DETAIL

NO SCALE — 1 / M6.1

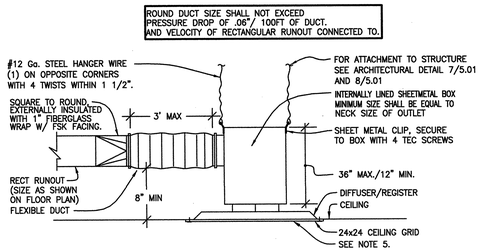

NOTES:
1. NO BENDS GREATER THAN 45° WILL BE ALLOWED IN FLEXIBLE DUCTS.
2. MINIMUM BEND RADIUS FOR FLEXIBLE DUCTS SHALL NOT BE LESS THAN 1.5
3. WIRE TIE EXTERNAL INSTALLATION IN PLACE AT MINIMUM OF 3 LOCATIONS.
4. VERIFY SHEET METAL SCREW (SMS) USED TO ATTACHED TO DIFFUSER DOES NOT IMPEDE OPPOSED BLADE DAMPER (OBD) OPPERATION.
5. PROVIDE PLASTIC SEISMIC CLIP TO CEILING RUNNERS. (TYP. 4 SIDES)

DUCT CONNECTION TO DIFFUSER/ REGISTER DETAIL

NO SCALE — 4 / M6.1

DETAIL NOT USED

NO SCALE — 7 / M6.1

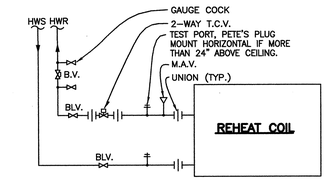

2-WAY VALVE

REHEAT COIL DETAIL

NO SCALE — 10 / M6.1

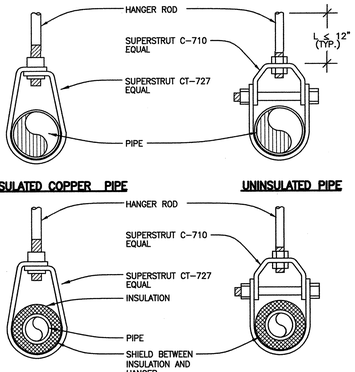

UNINSULATED COPPER PIPE **UNINSULATED PIPE**

INSULATED COPPER PIPE **INSULATED PIPE**

NOTE: FOR HANGER ROD SIZE & SUPPORT DETAIL, SEE 3 / M6.1

PIPE HANGER DETAIL

NO SCALE — 2 / M6.1

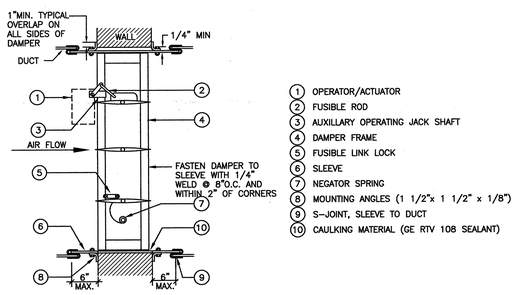

1. OPERATOR/ACTUATOR
2. FUSIBLE ROD
3. AUXILLARY OPERATING JACK SHAFT
4. DAMPER FRAME
5. FUSIBLE LINK LOCK
6. SLEEVE
7. NEGATOR SPRING
8. MOUNTING ANGLES (1 1/2"x 1 1/2" x 1/8")
9. S-JOINT, SLEEVE TO DUCT
10. CAULKING MATERIAL (GE RTV 108 SEALANT)

1. FIRE DAMPER DETAIL FOR REFERENCE ONLY.
2. FIRE DAMPERS SHALL BE STATE FIRE MARSHALL APPROVED AND INSTALLED STRICTLY PER MANUFACTURER'S PRINTED INSTRUCTIONS.
3. MANUFACTURER'S INSTALLATION INSTRUCTIONS SHALL BE MADE AVAILABLE TO THE INSPECTING AUTHORITIES.

COMBINATION FIRE/SMOKE DAMPER DETAIL

NO SCALE — 5 / M6.1

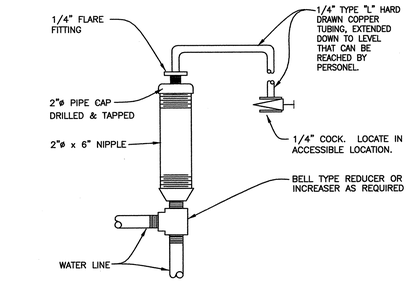

INSTALL AT ALL HIGH POINTS OF NEW PIPING AS DETAILED.

MANUAL AIR VENT DETAIL

NO SCALE — 8 / M6.1

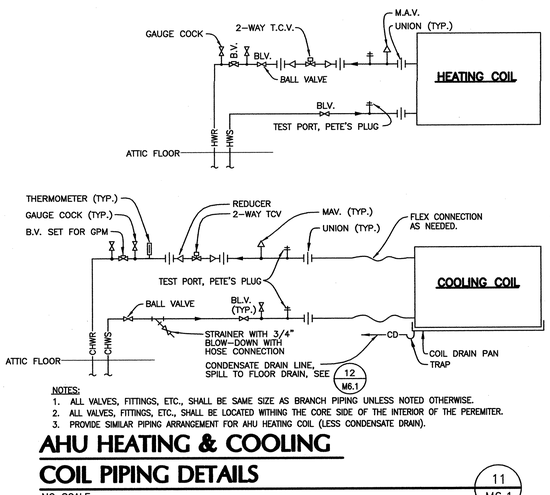

NOTES:
1. ALL VALVES, FITTINGS, ETC., SHALL BE SAME SIZE AS BRANCH PIPING UNLESS NOTED OTHERWISE.
2. ALL VALVES, FITTINGS, ETC., SHALL BE LOCATED WITHING THE CORE SIDE OF THE INTERIOR OF THE PEREMITER.
3. PROVIDE SIMILAR PIPING ARRANGEMENT FOR AHU HEATING COIL (LESS CONDENSATE DRAIN).

AHU HEATING & COOLING COIL PIPING DETAILS

NO SCALE — 11 / M6.1

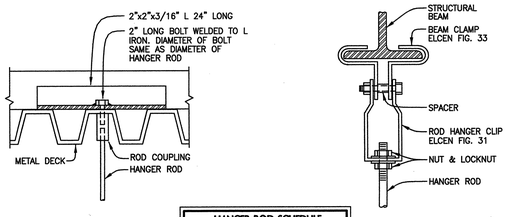

HANGER ROD SCHEDULE	
PIPE SIZE	ROD SIZE
1/2" TO 4"	3/8"ø

HANGER ROD SUPPORT DETAILS

NO SCALE — 3 / M6.1

DETAIL NOT USED

NO SCALE — 6 / M6.1

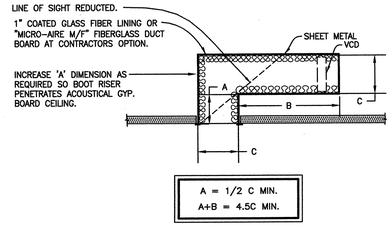

A = 1/2 C MIN.
A+B = 4.5C MIN.

RETURN AIR BOOT DETAIL

NO SCALE — 9 / M6.1

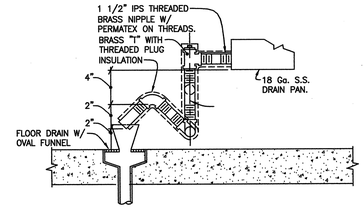

COIL DRAIN & TRAP DETAIL

NO SCALE — 12 / M6.1

tBP
architecture
planning
interiors
management

tBP/Architecture
1000 Burnett Ave, Suite 140
Concord, CA 94520
ph: 925.246.6419 fx: 925.246.6495

architect

AINSWORTH ASSOCIATES
MECHANICAL ENGINEERS
SACRAMENTO, CA
(916) 2002-2986

consultant

APPROVED
CONTRACTOR'S STAMP
DIV. OF STATE ARCHITECT
APPL. NO. 12519
DATE 2-7-05

agency

SAN RAMON VALLEY CENTER
CONTRA COSTA COMMUNITY COLLEGE DISTRICT
SAN RAMON, CALIFORNIA

owner

tBP project number : 20212.00
file name:
drawn by: DW checked by: SA
date: 03-04-04 plot scale: 1:1

Rev:	date:	description:
1	05-26-04	DESIGN CLARIFICATIONS

drawing title: MECHANICAL - DETAILS
building no.:
drawing no.: M6.1
drawing of

I:\2002-0280\W60\M6-1-3.dwg Tree...Jun03,2004-03:45pm

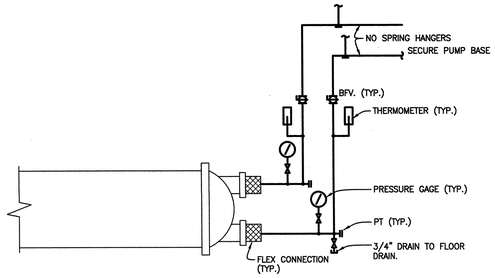

NOTES: 1. CONDENSER SIMILAR, OFFSET PIPING TO ALLOW HEAD REMOVAL.

EVAPORATOR/ PIPING CONNECTION DETAIL

NO SCALE

1 / M6.2

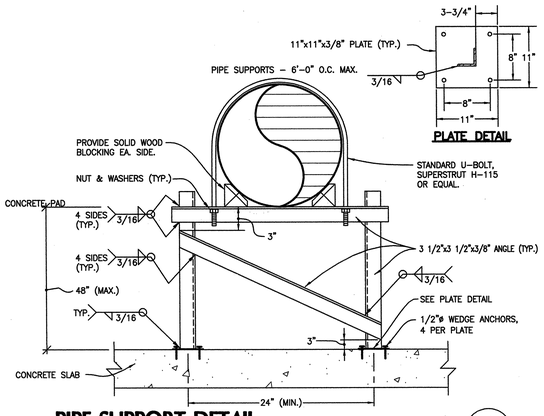

PIPE SUPPORT DETAIL

NO SCALE

4 / M6.2

NOTES: 1. REFER TO STRUCTURAL DRAWINGS FOR ANCHOR BOLT MINIMUM EMBEDMENT, DIAMETER, AND TESTING REQUIREMENTS.

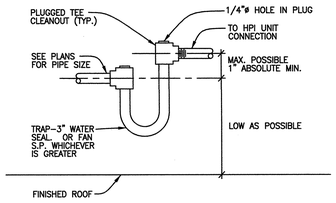

DRAIN PIPE DETAIL

NO SCALE

7 / M6.2

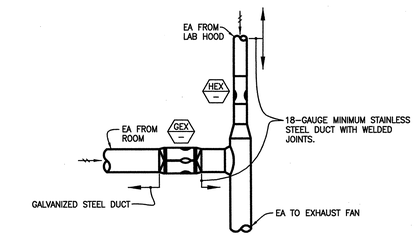

EXHAUST AIR SYSTEM

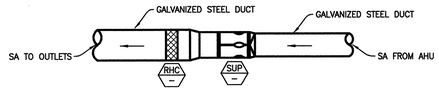

SUPPLY AIR SYSTEM

LABORATORY DUCT CONSTRUCTION DETAIL

NO SCALE

10 / M6.2

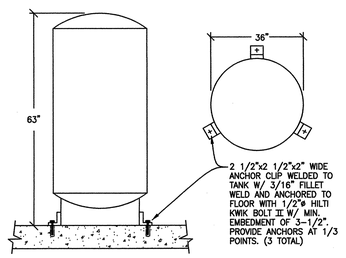

EXPANSION TANK ANCHORAGE DETAIL

NO SCALE

3 / M6.2

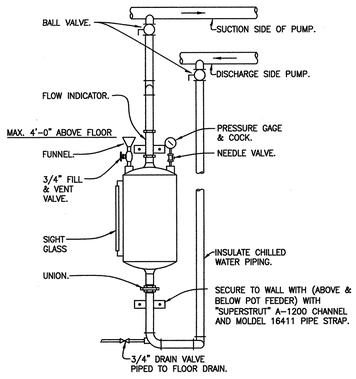

CHEMICAL POT FEEDER DETAIL

SCALE: 1/2"=1'-0"

2 / M6.2

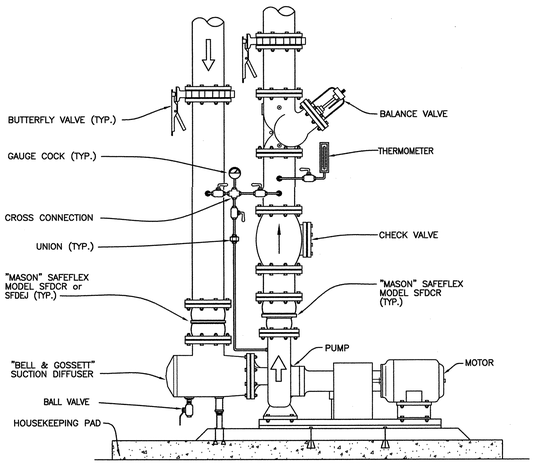

NOTES:

1. SEE 11 / M6.2 FOR PUMP MOUNTING.
2. "MASON" SAFEFLEX MODEL SFDCR OR SFDEJ TO BE COORDINATED WITH PIPE SIZES SUCTION AND DISCHARGE SIZES.

PUMP PIPING DETAIL

NO SCALE

5 / M6.2

NOTE: 1. TYPICAL OF ALL FLOOR MOUNTED PUMPS.

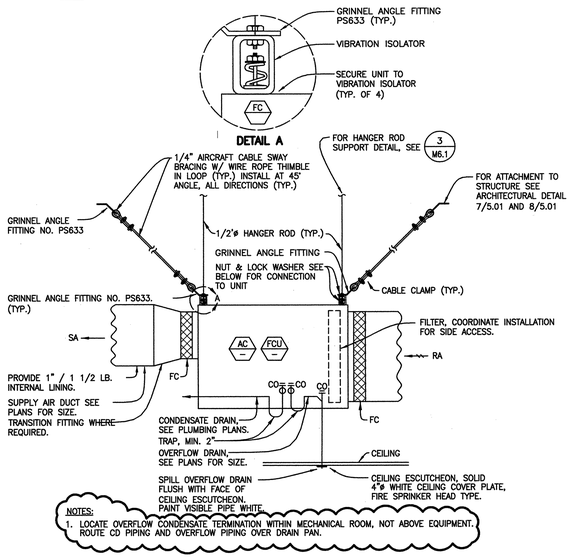

NOTES:

1. LOCATE OVERFLOW CONDENSATE TERMINATION WITHIN MECHANICAL ROOM, NOT ABOVE EQUIPMENT. ROUTE CD PIPING AND OVERFLOW PIPING OVER DRAIN PAN.

INDOOR AC UNIT AND FAN COIL MOUNTING DETAIL

NO SCALE

6 / M6.2

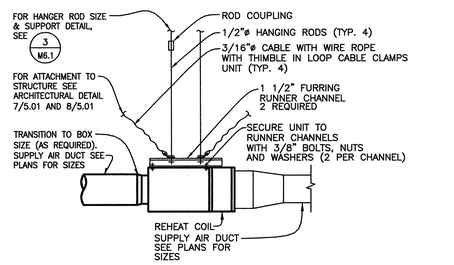

VAV BOX SUPPORT DETAIL

NO SCALE

8 / M6.2

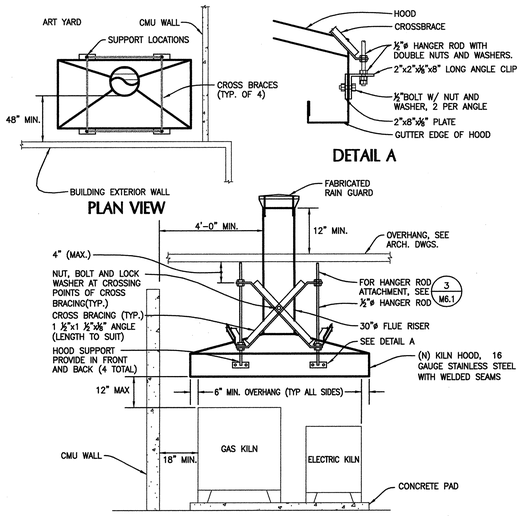

KILN HOOD DETAIL

NO SCALE

9 / M6.2

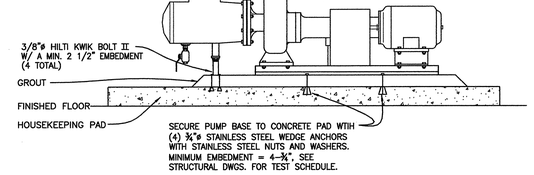

PUMP ANCHORAGE DETAIL

NO SCALE

11 / M6.2

NOTE: 1. TYPICAL OF ALL FLOOR MOUNTED PUMPS.

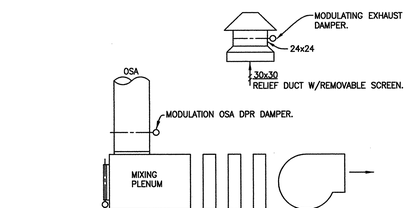

NOTE: MODULATE DAMPERS TO MAINTAIN SPACE SETPOINT.

AS TEMPERATURE RISES SET OSA AT 20% AND MODULATE CHILLED WATER CONTROL VALVE TO MAINTAIN SETPOINT.

IF HEATING IS REQUIRED CLOSE CHILLED WATER CONTROL VALVE AND MODULATE HEATING WATER CONTROL VALVE. START, STOP, FILTER PRESSURE, VALVE POSITION, TEMP FOR PLANT WORK AREA.

FCU DIAGRAM

NO SCALE

12 / M6.2

tBP
architecture
planning
interiors
management

tBP/Architecture
1000 Burnett Ave, Suite 140
Concord, CA 94520
ph: 925.246.6419 fx: 925.246.6495

architect

AINSWORTH ASSOCIATES
MECHANICAL ENGINEERS
SACRAMENTO, CA
LOS 20022-096

consultant

APPROVED
ABBREVIATED STAMP
DIV. OF THE STATE ARCHITECT
OFFICE OF REGULATION SERVICES
APPL NO. 107379
BY: RS
DATE: 6-9-04

agency

SAN RAMON VALLEY CENTER

CONTRA COSTA COMMUNITY COLLEGE DISTRICT

SAN RAMON, CALIFORNIA

owner

tBP project number : 2021.00

file name:

drawn by: DW checked by: SA

date: 03-09-04 plot scale: 1:1

Rev:	date:	description:
1	05-26-04	DESIGN CLARIFICATIONS

drawing title: MECHANICAL - DETAILS

building no.:

drawing no.: M6.2

drawing of

\\2002-2\BOWERS\Vol-1\Dwg Files\JAC\03.2004-05-03.dgn

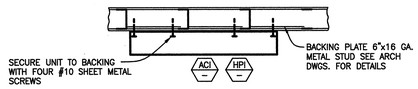

PLAN

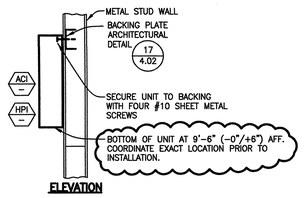

ELEVATION

INDOOR UNIT MOUNTING DETAIL

1 / M6.3

NO SCALE

NOTE: MAXIMUM SCHEDULED UNIT WEIGHT = 40 LBS.

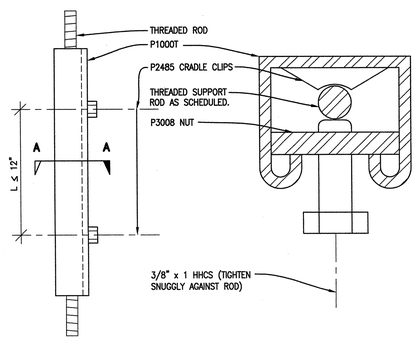

ELEVATION

SECTION A–A

UNISTRUT STIFFENER DETAIL

4 / M6.3

NO SCALE

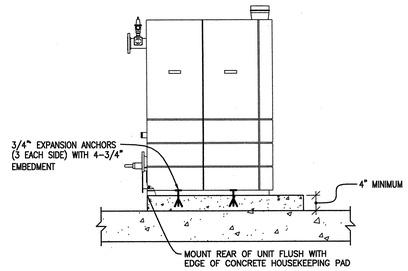

SIDE VIEW

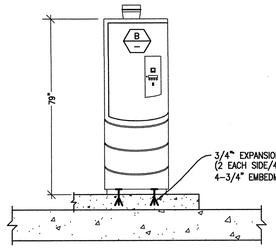

FRONT VIEW

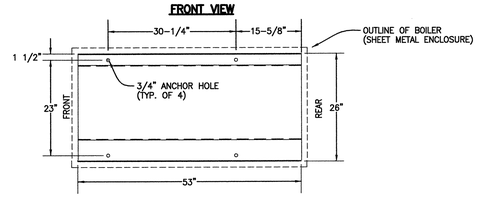

BOILER DETAIL

7 / M6.3

NO SCALE

NOTE: MAXIMUM SCHEDULED UNIT WEIGHT = 2,000 LBS.

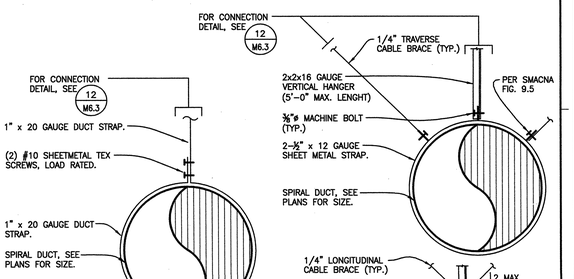

4"ø TO 32"ø DUCTS

DUCTS 33"ø–48"ø

NOTES:
1. PROVIDE SUPPORT AT MAXIMUM 10'-0" INTERVALS
2. MAXIMUM LOAD SHALL NOT EXCEED 200 LBS PER SUPPORT LOCATION.
3. PER SMACNA, NO SEISMIC BRACING REQUIRED FOR DUCTWORK WITH CROSS SECTIONAL AREAS OF 6 FT2 OR LESS. L ≤ 12".

ROUND DUCT SUPPORT AND BRACING DETAIL

10 / M6.3

NO SCALE

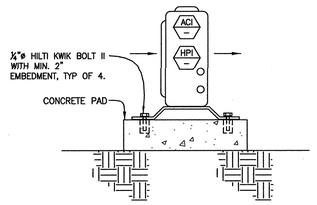

END VIEW

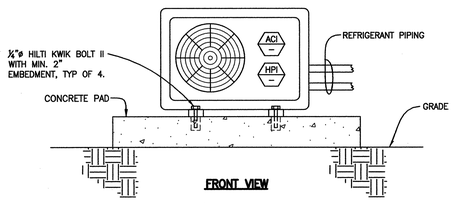

FRONT VIEW

OUTDOOR UNIT MOUNTING DETAIL

2 / M6.3

NO SCALE

NOTE: MAXIMUM SCHEDULED UNIT WEIGHT = 152 LBS.

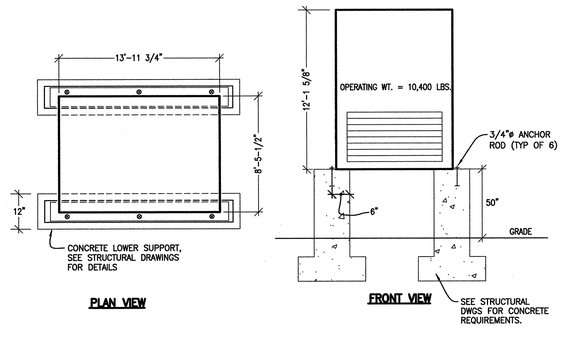

PLAN VIEW

FRONT VIEW

COOLING TOWER MOUNTING DETAIL

5 / M6.3

NO SCALE

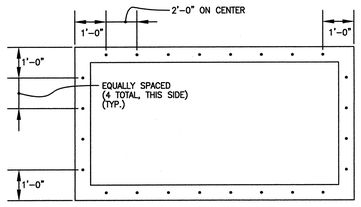

MOUNTING POINT LOCATIONS, N.T.S.

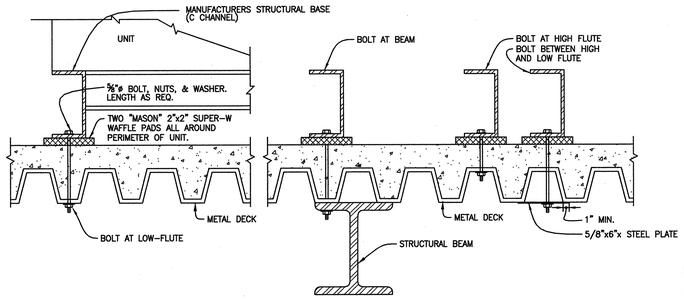

FOR USE WHERE BOLT IS NOT LOCATED AT LOW-FLUTE,

AHU MOUNTING DETAIL

6 / M6.3

NO SCALE

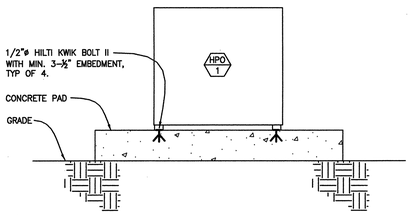

OUTDOOR UNIT MOUNTING DETAIL

3 / M6.3

NO SCALE

NOTE: MAXIMUM SCHEDULED UNIT WEIGHT = 450 LBS.

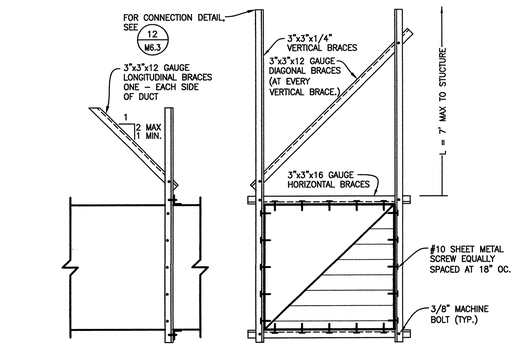

NOTES:
1. FOR DUCTS WITH A CROSS–SECTIONAL AREA GREATER THAN 6 FT2.
2. MAXIMUM DUCT SIZE AREA ≤ 15 SQ. FT.
3. REFERENCE SMACNA FIGURE 4–6 FOR ANY ADDITIONAL INFORMATION/REQUIREMENTS.
4. PER SMACNA, NO SEISMIC BRACING REQUIRED FOR DUCTWORK WITH CROSS SECTIONAL AREAS OF 6 FT2 OR LESS. L ≤ 12".

RECTANGULAR DUCT BRACING DETAIL

8 / M6.3

NO SCALE

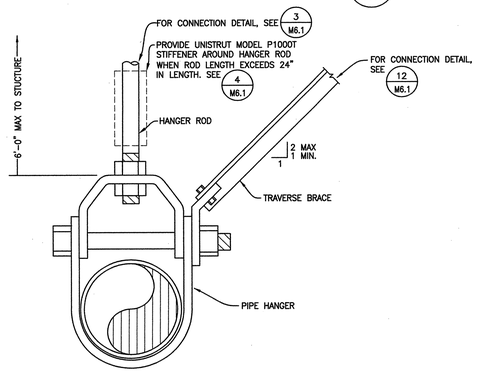

NOTES:
1. ALL PIPES SHALL BE SEISMICALLY RESTAINED PER SMACNA GUIDELINES.
2. BRACE ALL PIPING WITHIN CENTRAL PLANT THAT IS 1 ¼" NOMINAL DIAMTER AND LARGER.
3. BRACE ALL PIPES 2-½"ø AND LARGER.
4. PIPES SUSPENDED BY INDIVIDUAL HANGERS 12" OR LESS NEED NOT TO BE BRACED.
5. REFERENCE SMACNA GUIDELINES FOR ADDITIONAL REQUIREMENTS.
6. REFERENCE SAMCNA TABLE 5–7 FOR COMPONENT SIZES VERSUS PIPE SIZES.

PIPE SEISMIC RESTRAINT DETAIL

9 / M6.3

NO SCALE

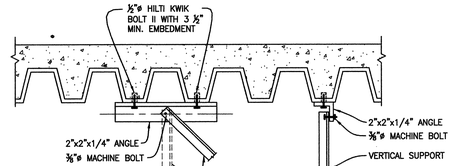

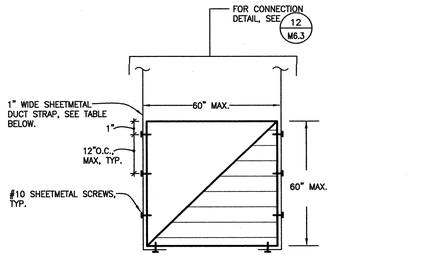

SUPPORT SPACING	STRAP GAUGE (MIN.)	MAX. ALLOWABLE LOAD
4'–0" MAX.	20	320 LBS./STRAP
5'–0" MAX.	18	420 LBS./STRAP
8'–0" MAX.	16	700 LBS./STRAP
10'–0" MAX.	16	700 LBS./STRAP

NOTES:
1. DETAIL APPLICABLE FOR SUPPLY AND EXHAUST SYSTEMS.
2. DETAIL APPLICABLE FOR DUCT HAVING MAXIMUM HALF OF DUCT PERIMETER EQUAL TO OR LESS THAN 120".
3. PER SMACNA, NO SEISMIC BRACING REQUIRED FOR DUCTWORK WITH CROSS SECTIONAL AREAS OF 6 FT2 OR LESS. L ≤ 12".

RECTANGULAR DUCT SUPPORT DETAIL

11 / M6.3

NO SCALE

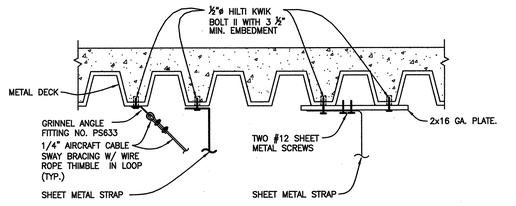

ATTACHMENTS TO STRUCTURE DETAILS

12 / M6.3

NO SCALE

tBP
architecture
planning
interiors
management

tBP/Architecture
1000 Burnett Ave, Suite 140
Concord, CA 94520
ph: 925.246.6419 fx: 925.246.6495

architect

AINSWORTH ASSOCIATES
MECHANICAL ENGINEERS
SACRAMENTO, CA

consultant

APPROVED
DIVISION OF THE STATE ARCHITECT
OFFICE OF REGULATION SERVICES
APP. NO. 10578
BY: JLS
DATE: 6-1-04

agency

SAN RAMON VALLEY CENTER
CONTRA COSTA COMMUNITY COLLEGE DISTRICT
SAN RAMON, CALIFORNIA

owner

tBP project number : 20212.00
file name:
drawn by: DW checked by: SA
date: 03-09-04 plot scale: 1:1

Rev:	date:	description:
1	05-26-04	DESIGN CLARIFICATIONS

drawing title: MECHANICAL - DETAILS
building no:
drawing no: M6.3
drawing of

I:\2002\20212\DWG\M6-13.dwg Time: Jun/03/2004-03:43pm

14

GAS PRESSURE REDUCER SCHEDULE

SYMBOL	MANUFACTUERER MODEL & SIZE	UNIT LOCATION/ SERVED	INLET PRESSURE	OUTLET PRESSURE	MINIMUM CAPACITY (CFH)	SEAT RING ø
GPR 1	FISHER MODEL #S202 2" BODY	CENTRAL PLANT	5 LBS.	11" WC	8,000	1"
GPR 2	FISHER MODEL #S102 1" OUTLET	KILN / LABS	5 LBS.	10.5" WC	475	5/16"
GPR 3	FISHER MODEL # S102 1" OUTLET	WATER HEATER	5 LBS.	10.5" WC	360	3/16"

NOTES:
1. PROVIDE TRANSITIONS AS NECESSARY.

PLUMBING FIXTURE SCHEDULE

WC-1	WATER CLOSET: [WALL MOUNT/SENSOR FLUSH VALVE/ADA] AMERICAN STANDARD "AFWALL" 2257.103 WALL MOUNTED WATER CLOSET, COMPLETE WITH OLSONITE MODEL 10CC-SS OFF WHITE SEAT AND SLOAN ROYAL 111-ES-S SENSOR OPERATED FLUSHOMETER. PROVIDE ONE EL-154 TRANSFORMER PER RESTROOM. MOUNT FLUSH VALVE ON WIDE SIDE OF ENCLOSURE.
WC-2	WATER CLOSET: [WALL MOUNT/SENSOR FLUSH VALVE/STANDARD HEIGHT] AMERICAN STANDARD "AFWALL" 2257.103 WALL MOUNTED WATER CLOSET, COMPLETE WITH OLSONITE MODEL 10CC-SS OFF WHITE SEAT AND SLOAN ROYAL 111-ES-S SENSOR OPERATED FLUSHOMETER. CONNECT TO TRANSFORMER PROVIDED BY WC-1. MOUNT FLUSH VALVE ON WIDE SIDE OF ENCLOSURE.
WC-3	WATER CLOSET: [FLOOR MOUNT/FLUSH VALVE/ADA HEIGHT] AMERICAN STANDARD "MADERA 17H" 3043.102 FLOOR MOUNTED WATER CLOSET, COMPLETE WITH OLSONITE MODEL 10CC-SS OFF WHITE SEAT AND SLOAN ROYAL 111 FLUSHOMETER.
UR-1	URINAL: [WALL MOUNT/SENSOR FLUSH VALVE/ADA] AMERICAN STANDARD "WASHBROOK" MODEL 6501.010 WALL MOUNTED URINAL, COMPLETE WITH SLOAN ROYAL 186-1-ES-S SENSOR OPERATED FLUSHMETER. CONNECT TO TRANSFORMER PROVIDED BY WC-1.
L-1	LAVATORY: [WALL MOUNT/STAINLESS STEEL/SINGLE BASIN/HARD-WIRED SENSOR FAUCET/ADA]: "ACORN" MERIDIAN STAINLESS STEEEL CURVED FRONT ONE-PERSON WASHBASIN, MODEL NUMBER 3701-1. PROVIDE WITH THE FOLLOWING OPTIONS: - SO SENSOR FAUCET OPERATION - HARD WIRED - EB ENCLOSED BOTTOM - MXT HOT AND COLD THERMOSTATIC MIXING VALVE - PDM PUMP TYPE SOAP DISPENSER
L-2	LAVATORY: [WALL MOUNT/STAINLESS STEEL/DUAL BASIN/HARD-WIRED SENSOR FAUCET/ADA]: "ACORN" MERIDIAN STAINLESS STEEEL CURVED FRONT TWO-PERSON WASHBASIN, MODEL NUMBER 3702-1. PROVIDE WITH THE FOLLOWING OPTIONS: - SO SENSOR FAUCET OPERATION - HARD WIRED - EB ENCLOSED BOTTOM - MXT HOT AND COLD THERMOSTATIC MIXING VALVE - PDM PUMP TYPE SOAP DISPENSER
L-3	LAVATORY: [WALL MOUNT/STAINLESS STEEL/TRIPLE BASIN/HARD-WIRED SENSOR FAUCET/ADA]: "ACORN" MERIDIAN STAINLESS STEEEL CURVED FRONT THREE-PERSON WASHBASIN, MODEL NUMBER 3703-1. PROVIDE WITH THE FOLLOWING OPTIONS: - SO SENSOR FAUCET OPERATION - HARD WIRED - EB ENCLOSED BOTTOM - MXT HOT AND COLD THERMOSTATIC MIXING VALVE - PDM PUMP TYPE SOAP DISPENSER
L-4	LAVATORY: [WALL MOUNT/STAINLESS STEEL/QUAD BASIN/HARD-WIRED SENSOR FAUCET/ADA]: "ACORN" MERIDIAN STAINLESS STEEEL CURVED FRONT FOUR-PERSON WASHBASIN, MODEL NUMBER 3704-1. PROVIDE WITH THE FOLLOWING OPTIONS: - SO SENSOR FAUCET OPERATION - HARD WIRED - EB ENCLOSED BOTTOM - MXT HOT AND COLD THERMOSTATIC MIXING VALVE - PDM PUMP TYPE SOAP DISPENSER
MS-1	MOP SINK: [COURNER MOUNT/CAST IRON/H&CW] KOHLER "WHITBY" K6710 CAST IRON MOP SINK WITH K8940 COATED WIRE RIM GUARD. COMPLETE WITH CHICAGO NO. 897 FAUCET WITH VACUUM BREAKER, WALL SUPPORT AND INTEGRAL STOPS IN SHANKS. PROVIDE 5-FOOT HOSE AND HOSE BRACKET MOUNTED TO WALL WITH STAINLESS STEEL SCREWS AND BLOCKING. MOUNT FAUCET AT +36 INCHES.
DF-1	DRINKING FOUNTAIN: [WALL MOUNT/ADA/DUAL HEIGHT-DOUBLE BUBBLER/ADA] HAWS MODEL 1011 HANDICAPPED-ACCESSIBLE HIGH-LOW DRINKING FOUNTAIN, COMPLETE WITH VANDAL-RESISTANT STAINLESS STEEL BOTTOM PLATE, HEAVY DUTY MOUNTING PLATE, AND VANDAL-RESISTANT PIN ON BUBBLERS. MOUNT UNIT WITH BUBBLER AT HEIGHT AS INDICATED ON ARCHITECTURAL DRAWINGS.
S-1	SINK: [DOUBLE SS SINK/ADA/H&CW/ W/ INSTA-HOT & GARBAGE DISPOSER/ ADA] JUST MODEL DL-ADA-1829-A-GR, 18 GAUGE, SELF-RIMMING CONSTRUCTION, THREE HOLE PUNCH, DOUBLE STAINLESS STEEL SINK AT A DEPTH OF 6 1/2". PROVIDE J-ADA-35 STAINLESS STEEL CUP STRAINER WITH OFFSET AND 1 1/4" TAILPIECE. PROVIDE WITH CHICAGO MODEL 1100 FAUCET MODIFIED WITH A GN2A GOOSENECK SPOUT, IN-SINK-ERATOR MODEL GN INSTANT HOT WATER DISPENSER MOUNTED ON THE REAR RIGHT SIDE OF SINK AND PROVIDE IN-SINK-ERATOR MODEL 77 DISPOSER, MOUNT ON/OFF SWITCH ON WALL. INSULATE WATER AND DRAIN PIPING EXPOSED BELOW LAVATORY WITH "PLUMBEREX" HANDY SHIELD SAFETY COVERS, PRO-2000 SERIES.
S-2	SINK: [CERAMIC STUDIO SINK - MULTI-STATION SINK, CLAY TRAP] BRADLEY MODEL 596-051 (6951A-5) WALL SINK WITH 5 SINGLE HOLE DRILLINGS FOR 4 CHICAGO NO. 50 FAUCETS, AND 1 CHICAGO NO. 930 FAUCET WITH K2 ADAPTER FOR E2 HOSE THREAD OUTLET. PROVIDE WITH J.R. SMITH, MODEL 8710 CLAY TRAP (1 1/2" SIZE).
S-3	SINK: [CENTRAL PLANT SINK - STAINLESS STEEL, H&CW] JUST MODEL SL-1921-A-GR, 16 GAUGE, SELF-RIMMING CONSTRUCTION, THREE HOLE PUNCH, STAINLESS STEEL SINK AT A DEPTH OF 7-½". PROVIDE J-35 STAINLESS STEEL CUP STRAINER AND 1 1/4" TAILPIECE. PROVIDE WITH CHICAGO MODEL 786-E3 FAUCET.
SS-1	SERVICE SINK: [FLOOR MOUNT CAST IRON SERVICE SINK / H&CW] KOHLER "BANNON" MODEL K-6716 SERVICE SINK COMPLETE WITH MODEL K-6673 TRAP WITH STRAINER. PROVIDE WITH CHICAGO MODEL 897 FAUCET.
SHO-1	SHOWER: [ADA / LOCKER ROOMS] SHOWER ENCLOSURE PROVIDED BY OTHERS. FURNISH AND INSTALL SYMMONS SAFTEYMIX SERIES MODEL 1-25-FSB-X PRESSURE BALANCING MIXING VALVE WITH SHOWER HEAD, 5' METAL HOSE WITH IN-LINE VACUUM BREAKER, 30" SLIDE BAR, AND INTEGRAL SERVICE STOPS.
TD	TRENCH DRAIN: ZURN Z-806-Z 6" WIDE TRENCH DRAIN SYSTEM, WITH HEAVY DUTY FRAME & ANCHOR STUDS, CAST IRON GRATE WITH LOCKDOWNS AND ANCHOR TABS.
AR-1	AIR REEL: "REELCRAFT" MODEL 4617 OLP OR EQUAL. CEILING MOUNTED HOSE REEL, 300 PSI ⅜" RETRACTABLE HOSE, MIN. LENGTH = 17'.
AD-1	AREA DRAIN: WATTS FD-440-60-9-6 WITH HINGED VANDAL PROOF GRATE.
EW/SS	EYE WASH/SAFETY SHOWER: (FOR CENTRAL PLANT ONLY): HAWS MODEL 8300 COMBINATION SHOWER AND EYEWASH.
RB	REFRIGERATOR BOX: REFRIGERATOR HOOK UP, "GUY GRAY" MODEL BIM 875
RD	ROOF DRAIN: ZURN MODEL Z-100-R-C WITH CAST IRON DOME STRAINER, ROOF SUMP RECIEVER, AND UNDERDECK CLAMP.
ORD	OVERFLOW ROOF DRAIN: ZURN MODEL Z-100-89-R-C WITH CAST IRON DOME STRAINER, UNDERDECK CLAMP, ROOF SUMP RECEIVER, AND 2" HIGH EXTERNAL WATER DAM.

MAXIMUM FIXTURE UNIT LOADING FOR WATER PIPE

NOMINAL PIPE SIZE (INCHES)	3/4"	1"	1 1/4"	1 1/2"	2"	2 1/2"	3"	4"	6"
FIXTURE UNITS (WITHOUT FLUSH VALVES)	6	10	21	34	127	245	431	875	3150
FIXTURE UNITS (WITH ONE OR MORE FLUSH VALVES.)	-	5	10	20	48	124	295	850	3150

NOTES:
1. USE ABOVE DATA ONLY WHEN PIPE SIZES ARE NOT OTHERWISE SIZED ON THE DRAWINGS.
2. FIXTURE UNITS ARE AS LISTED FOR PUBLIC USE IN UNIFORM PLUMBING CODE.

PLUMBING FIXTURE CONNECTION SCHEDULE

FIXTURE	SYMBOL	WASTE		VENT	COLD WATER		HOT WATER	
		BRANCH	OUTLET		BRANCH	OUTLET	BRANCH	OUTLET
WATER CLOSET	WC	4"	4"	2"	1 1/4"	1"	-	-
URINAL	UR	2"	2"	1 1/2"	1"	3/4"	-	-
LAVATORY	L	2"	1 1/2"	1 1/2"	3/4"	1/2"	3/4"	1/2"
DRINKING FOUNTIAN	DF	2"	1 1/2"	1 1/2"	3/4"	1/2"	-	-
MOP SINK	MS	3"	3"	2"	3/4"	1/2"	3/4"	1/2"
FLOOR SINK	FS	2"	2"	1 1/2"	-	-	-	-
SINK	S	2"	1 1/2"	1 1/2"	3/4"	1/2"	3/4"	1/2"
FLOOR DRAIN	FD	2"	2"	1 1/2"	-	-	-	-
HOSE BIBB	HB	-	-	-	3/4"	3/4"	-	-
HOSE STATION	HS	-	-	-	3/4"	1/2"	3/4"	1/2"
WASHER	W	2"	2"	1 1/2"	3/4"	1/2"	3/4"	1/2"
DISH WASHER	DW	2"	1 1/2"	1 1/2"	3/4"	1/2"	3/4"	1/2"
SHOWER	SHO	2"	1 1/2"	1 1/2"	3/4"	1/2"	3/4"	1/2"
REFRIGERATOR BOX	RB	-	-	-	1/2"	1/2"	-	-

NOTES:
1. WATER BRANCH LINES WHERE LESS THAN 10'-0" LONG MAY BE SAME SIZE AS OUTLETS SCHEDULED ABOVE.
2. ITEMS MARKED WITH AN ASTERISK (*) ARE TO BE ROUGH-IN AND CONNECT ONLY.

EQUIPMENT LIST

DWH 1 — DOMESTIC WATER HEATER: "A0 SMITH" EXTRA HIGH 98% EFFICIENT TANK-TYPE WATER HEATER. CYCLONE MODEL BTH-300 OR EQUAL. TANK SHALL HAVE A CAPACITY OF 130 GALLONS WITH A RECOVERY RATE OF 445 GPH AT 40°F-120°F. HEATER WILL HAVE AN INPUT RATING OF 300 MBH, AND BE RATED AT 120V, 1ø, 6.0 AMPS, 60 Hz. APPROXIMATE WEIGHT = 2,000 LBS.

EWH 1CP / EWH 2CP — ELECTRIC WATER HEATER: "IN-SINK-ERATOR" POINT-OF-USE WATER HEATER. WATER HEATER SHALL BE ISE MODEL W-154 OR EQUAL. HEATER SHALL BE RATED AT 1.5KW., 120V, 1ø 60 Hz. TANK SHALL BE 4 GALLON CAPACITY AND HAVE A ONE-YEAR FULL WARANTY ON ALL PARTS AND LABOR. APPROXIMATE WEIGHT = 60 LBS.

CP 1 / CP 2 — CIRCULATION PUMP: "GRUNDFOS" MODEL SERIES 15-42F WET-ROTOR, IN-LINE, SINGLE STAGE, MAINTENANCE FREE, CIRCULATING PUMP FOR HOT WATER LOOP. FLANGE SIZE 1/2", 2 GPM @ 12 FT. HD., 115V., 0.74 AMPS, 85 WATTS, 1/25 HP., PROVIDE WITH AQUA STAT HEAT SENSING UNIT AND TIMER. APPROXIMATE UNIT WEIGHT = 10 LBS.

VP 1 — VACUUM PUMP: BEACON MODEL LTV-5D-L120 DUPLEX LUBRICATED ROTARY VANE VACUUM PUMP, WITH 120 GAL. HORIZONTAL RECEIVER, TWO 460V, 3ø, 5 H.P. MOTORS, WITH A MIN. CAPACITY OF 19 SCFM @ 19" MERCURY. APPROXIMATE WEIGHT = 1261 LBS.

AIRC 1 — AIR COMPRESSOR: "INGERSOLL-RAND" TYPE T30 TWO-STAGE AIR COMPRESSOR, MODEL NO. 2545E10 , ELECTRIC MOTOR DRIVEN, 120 GALLON HORIZONTAL RECEIVER SIZE, 10 HP, 460V, 3ø, 60 Hz. PROVIDE WITH PRE-FILTER (MODEL IRHE64), DRYER (MODEL DS35), PARTICULATE FILTER (MODEL IRGP64), OIL/ WATER SEPARATOR. PRESSURE REDUCING VALVE (PRV) SET FOR 125 PSI. AIR COMPRESSOR APPROX. WT.= 1050 LBS.

MV 1 — MIXING VALVE: "RADA" MODEL 40R, MIXING VALVE WITH INTEGRAL THERMOMETER, CHECK VALVES, STRAINERS, SIGHT FLOW INDICATOR, AND THERMOSTATIC RETURN LIMITER. APPROXIMATE WEIGHT 30 LBS.

NT 1 — NEUTRALIZING TANK: "ORION" STYLE 7, FIBERGLASS REINFORCED TANK WITH BOLTED TOP, 150 GALLON CAPACITY WITH 1700 LBS OF LIMESTONE. INSTALL PER MANUFACTURER'S RECOMMENDATIONS.

PLUMBING LEGEND

	SOIL OR WASTE LINE BELOW GRADE
	SOIL OR WASTE LINE ABOVE GRADE
IW	INDIRECT WASTE LINE
AW	ACID WASTE LINE
	COLD WATER LINE
	HOT WATER LINE
	HOT WATER RETURN LINE
G	GAS LINE
GL	GREASE LINE
	VENT LINE
RWL	RAINWATER LEADER LINE
ORWL	OVERFLOW RAINWATER LEADER LINE
O	MEDICAL OXYGEN
V	VACUUM LINE
CA	COMPRESSED AIR
F	FIRE LINE
GV.	GATE VALVE
BV.	BALANCE VALVE
CKV.	CHECK VALVE
LH.GC.	LEVER HANDLE GAS COCK
	THERMOMETER
	UNION
T & P	TEMPERATURE AND PRESSURE RELIEF LINE
ABC	ABOVE CEILING
AFF.	ABOVE FINISHED FLOOR
AFG.	ABOVE FINISHED GRADE
COTF	CLEANOUT TO FLOOR
COTG	CLEANOUT TO GRADE
CO., WCO.	CLEANOUT, WALL CLEANOUT
CW (D)(R)	COLD WATER (DROP) (RISER)
CFF	CAP FOR FUTURE
(E), (N)	EXISTING, NEW
FA, TB	FROM ABOVE, TO BELOW
FB, TA	FROM BELOW, TO ABOVE
FD.	FLOOR DRAIN
FU.	FIXTURE UNITS
GPM	GALLONS PER MINUTE
HW (D)(R)	HOT WATER (DROP) (RISER)
IE	INVERT ELEVATION
O.C.	ON CENTER
ORD.	OVERFLOW ROOF DRAIN
ORWL	OVERFLOW RAINWATER LEADER
POC	POINT OF CONNECTION
R.I.O.	ROUGH IN ONLY
RD.	ROOF DRAIN
RWL	RAINWATER LEADER
T.P	TRAP PRIMER
TYP.	TYPICAL
UF	UNDER FLOOR
UC.	UNDER COUNTER
UNO	UNLESS NOTED OTHERWISE
HD	HOPPER DRAIN
V, VR, VTR	VENT, VENT RISER, VENT THRU ROOF
W, WD	WASTE, WASTE DROP
ø	DIAMETER
ROOM NAME ---	ROOM NAME AND NUMBER

tBP architecture planning interiors management
tBP/Architecture
1000 Burnett Ave, Suite 140
Concord, CA 94520
ph: 925.246.6419 fx: 925.246.6495
architect

AINSWORTH ASSOCIATES
MECHANICAL ENGINEERS
SACRAMENTO, CA
consultant

APPROVED — DEPARTMENT OF THE STATE ARCHITECT — DSA APPL NO. 10119 — DATE: 5-26-04

agency

SAN RAMON VALLEY CENTER
CONTRA COSTA COMMUNITY COLLEGE DISTRICT
SAN RAMON, CALIFORNIA

owner

tBP project number : 20212.00
file name:
drawn by: DW checked by: SA
date: 03-01-04 plot scale: 1:1

1 05-26-04 DESIGN CLARIFICATIONS

drawing title: PLUMBING - LEGEND, SCHEDULES, AND NOTES
building no.:
drawing no.: P0.1
drawing of

I:\projects\2021\20212.00 SRVC\CAD\Dwg\P0-1.dwg Thursday, June 03, 2004 - 04:12pm

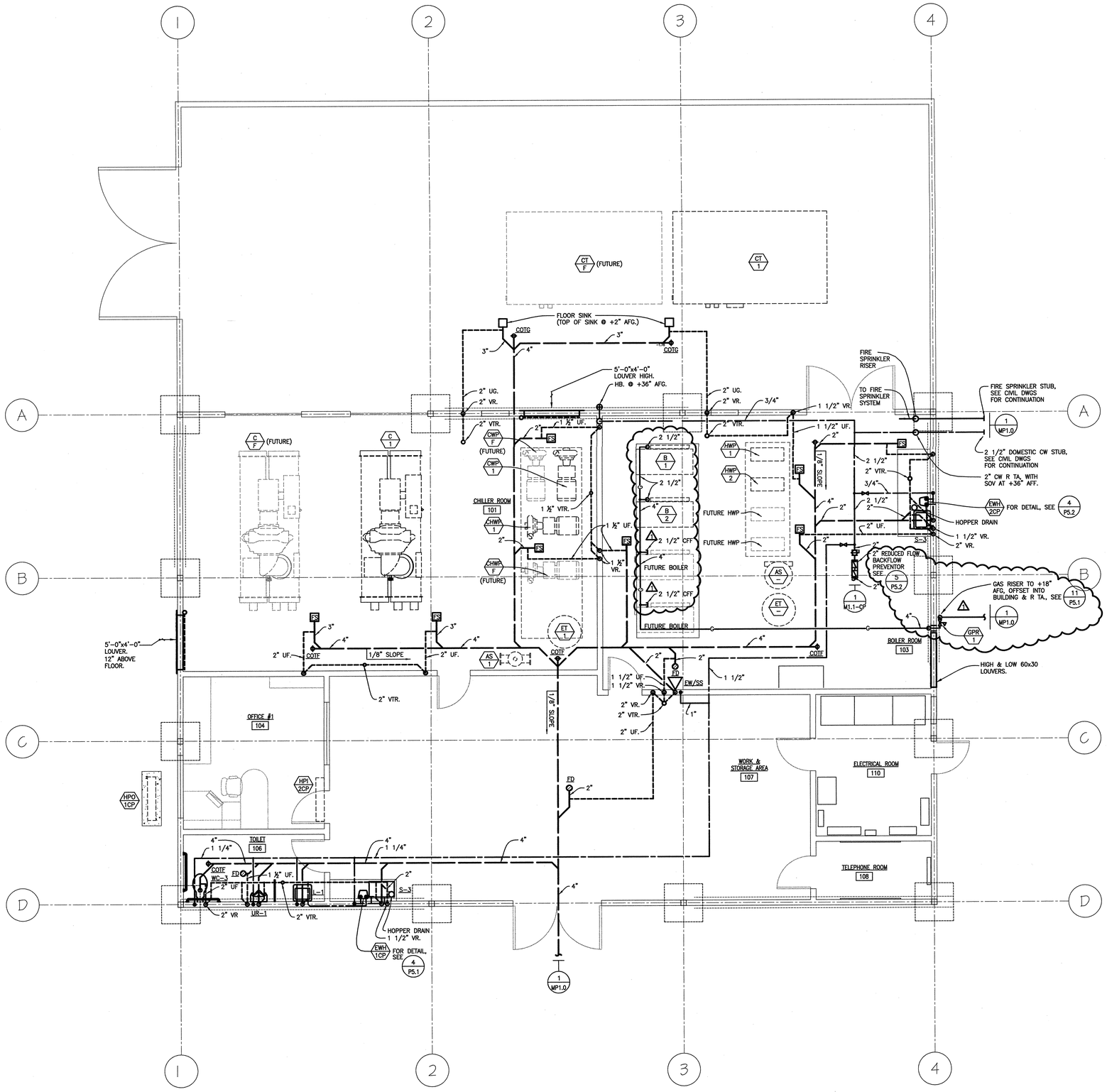

PLUMBING - CENTRAL PLANT

SCALE: 1/4"=1'-0"

1 P1.1CP

NOTES:

1. FUTURE EQUIPMENT IS SHOWN FOR REFERENCE ONLY.

tBP architecture planning interiors management

tBP/Architecture
1000 Burnett Ave, Suite 140
Concord, CA 94520
ph: 925.246.6419 fx: 925.246.6495

architect

AINSWORTH ASSOCIATES
MECHANICAL ENGINEERS
SACRAMENTO, CA
JOB: 2002-088

consultant

APPROVED
DIV. OF THE STATE ARCHITECT
OFFICE OF REGULATION SERVICES
APPL. NO. 105719
AC FIS. SS.
DATE 6-9-04

agency

SAN RAMON VALLEY CENTER

CONTRA COSTA COMMUNITY COLLEGE DISTRICT

SAN RAMON, CALIFORNIA

owner

tBP project number : 2021200

file name:

drawn by: DW checked by: SA

date: 03-04-04 plot scale: 1:1

Rev:	date:	description:
1	05-26-04	DESIGN CLARIFICATIONS

drawing title: building no.:

PLUMBING - CENTRAL PLANT

drawing no.:

P1.1CP

drawing of

146

\\2002-088\DWGS\P1-1-cp.dwg Time:Jun03,2004-04:12pm

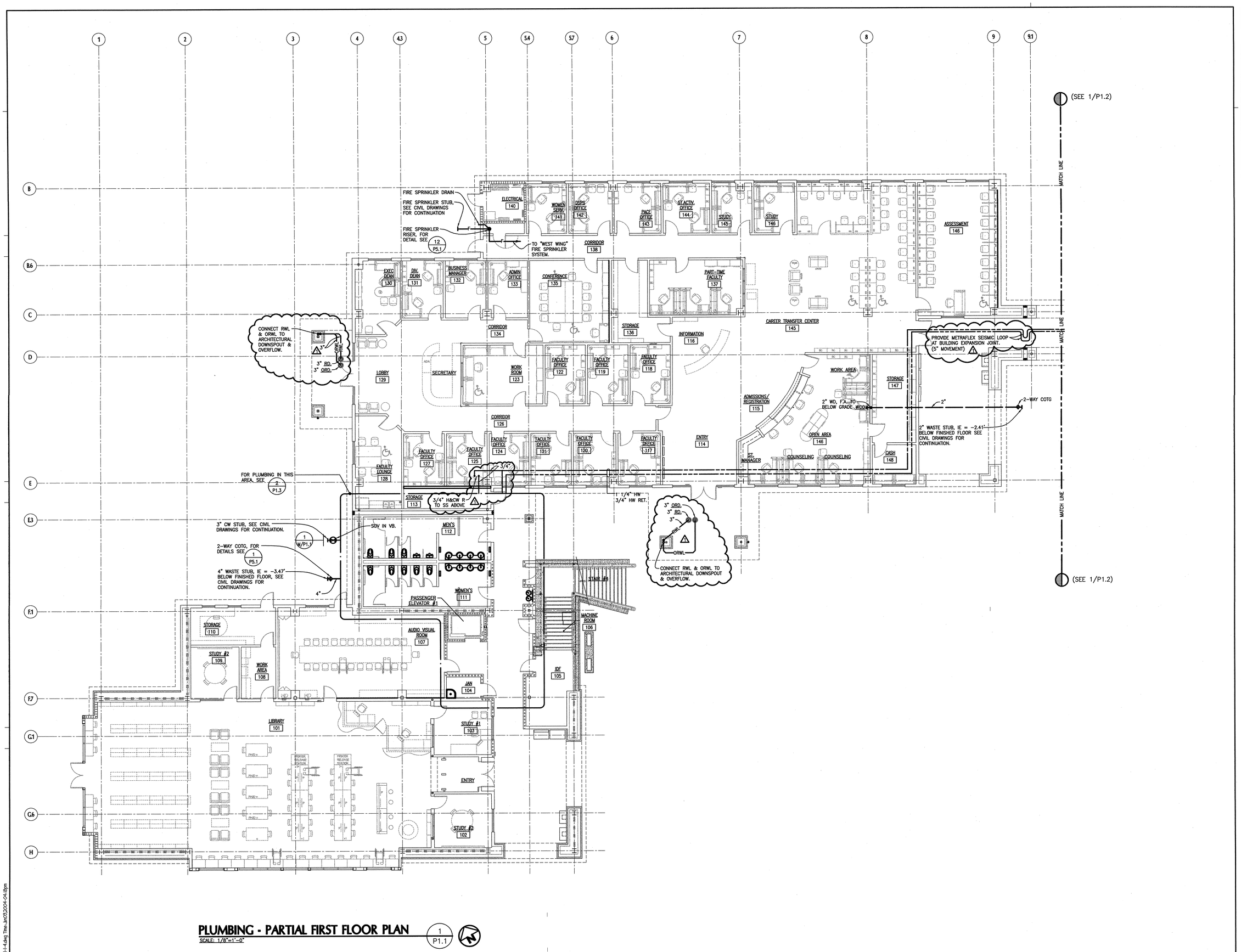

PLUMBING - PARTIAL FIRST FLOOR PLAN

SCALE: 1/8"=1'-0"

1 P1.1

tBP architecture planning interiors management

tBP/Architecture
1000 Burnett Ave, Suite 140
Concord, CA 94520
ph: 925.246.6419 fx: 925.246.6495

architect

AINSWORTH ASSOCIATES
MECHANICAL ENGINEERS
SACRAMENTO, CA
JOB 2002-038

consultant

APPROVED
DIV. OF THE STATE ARCHITECT
OFFICE OF REGULATION SERVICES
APPL. NO. 105719
FILE
DATE 6-9-04

agency

SAN RAMON VALLEY CENTER

CONTRA COSTA COMMUNITY COLLEGE DISTRICT

SAN RAMON, CALIFORNIA

owner

tBP project number : 20212.00

file name:

drawn by: DW checked by: SA

date: 03-04-04 plot scale: 1:1

Rev:	date:	description:
1	05-26-04	DESIGN CLARIFICATIONS

drawing title: building no.:

PLUMBING - PARTIAL 1ST FLOOR PLAN

drawing no.:

P1.1

drawing of

147

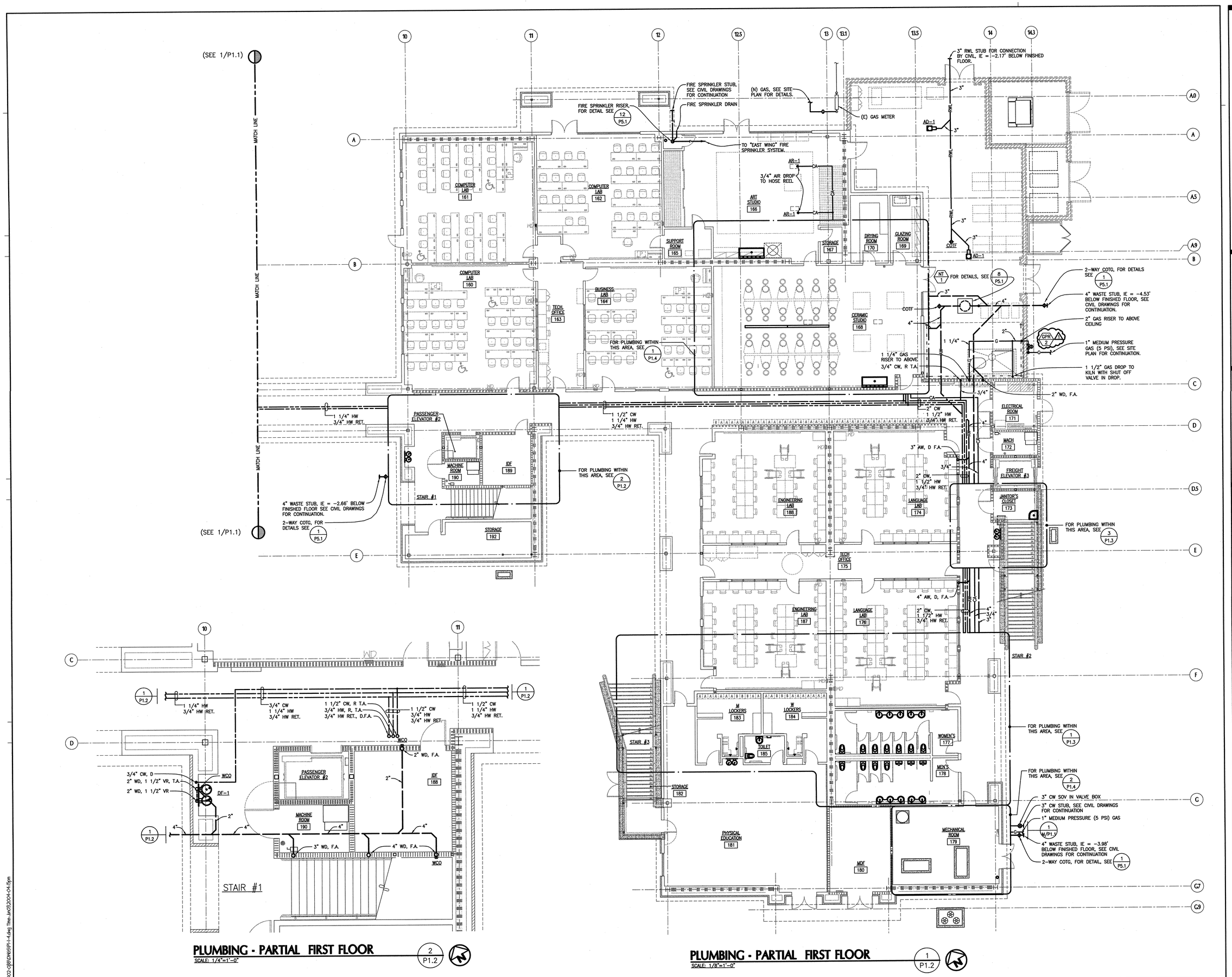

PLUMBING - PARTIAL FIRST FLOOR 2 P1.2
SCALE: 1/4"=1'-0"

PLUMBING - PARTIAL FIRST FLOOR 1 P1.2
SCALE: 1/8"=1'-0"

tBP architecture planning interiors management

tBP/Architecture
1000 Burnett Ave, Suite 140
Concord, CA 94520
ph: 925.246.6419 fx: 925.246.6495

architect

AINSWORTH ASSOCIATES
MECHANICAL ENGINEERS
SACRAMENTO, CA
JOB: 2002-086

consultant

APPROVED
DIV. OF THE STATE ARCHITECT
OFFICE OF REGULATION SERVICES
APPL. NO. 105719
AC FLS SS
DATE 6-9-04

agency

SAN RAMON VALLEY CENTER

CONTRA COSTA COMMUNITY COLLEGE DISTRICT

SAN RAMON, CALIFORNIA

owner

tBP project number: 2021200

file name:

drawn by: DW checked by: SA

date: 03-04-04 plot scale: 1:1

Rev:	date:	description:
1	05-26-04	DESIGN CLARIFICATIONS

drawing title: building no.:

PLUMBING - PARTIAL 1ST FLOOR PLAN

drawing no.:

P1.2

drawing of

NOTE: COORDINATE EXACT LOCATIONS OF PROPOSED EQUIPMENT W/ ARCHITECTURAL PLANS.

FUTURE SINK, PROVIDE H&CW ANGLE STOPS AND CAPPED WASTE STUB FOR FUTURE CONNECTION.

1" CW & 4" WASTE STUB FOR FOUNTAIN CONNECTION. COORDINATE EXACT LOCATION WITH LANDSCAPE DWGS.

METRAFLEX MLS80075 METRALOOP EXPANSION LOOPS.

2 1/2" CW, D TO 1ST FLOOR FIXTURES & 2 1/2" CW, R TO 2ND FLOOR FIXTURES.

FOR PLUMBING WORK IN MECHANICAL ROOM SEE 2/P1.4

PLUMBING - PARTIAL FIRST FLOOR PLAN (2/P1.3)
SCALE: 1/4"=1'-0"

PLUMBING - PARTIAL FIRST FLOOR PLAN (1/P1.3)
SCALE: 1/4"=1'-0"

PLUMBING - PARTIAL FIRST FLOOR PLAN (3/P1.3)
SCALE: 1/4"=1'-0"

tBP/architecture
1000 Burnett Ave, Suite 140
Concord, CA 94520
ph: 925.246.6419 fx: 925.246.6495

architect

AINSWORTH ASSOCIATES
MECHANICAL ENGINEERS
SACRAMENTO, CA
(916) 2002-089

consultant

APPROVED DIV. OF THE STATE ARCHITECT VOTICE OF VIOLATION SERVICES APPL. NO. 10519 BY: DATE: 4-9-04

agency

SAN RAMON VALLEY CENTER

CONTRA COSTA COMMUNITY COLLEGE DISTRICT

SAN RAMON, CALIFORNIA

owner

tBP project number :	2021.00
file name:	
drawn by: DW	checked by: SA
date: 03-04-04	plot scale: 1:1

Rev:	date:	description:
1	05-26-04	DESIGN CLARIFICATIONS

drawing title: PLUMBING - PARTIAL 1ST FLOOR PLANS

building no.:

drawing no.: P1.3

drawing of

\\2002-02\tBP\Projects\Projects\2021.00 SRVC Phase 1\Drawings\Arch\2021.00 SRVC Phase 1 Arch.dwg, Tree: Jun 23/2004 - 04:16pm

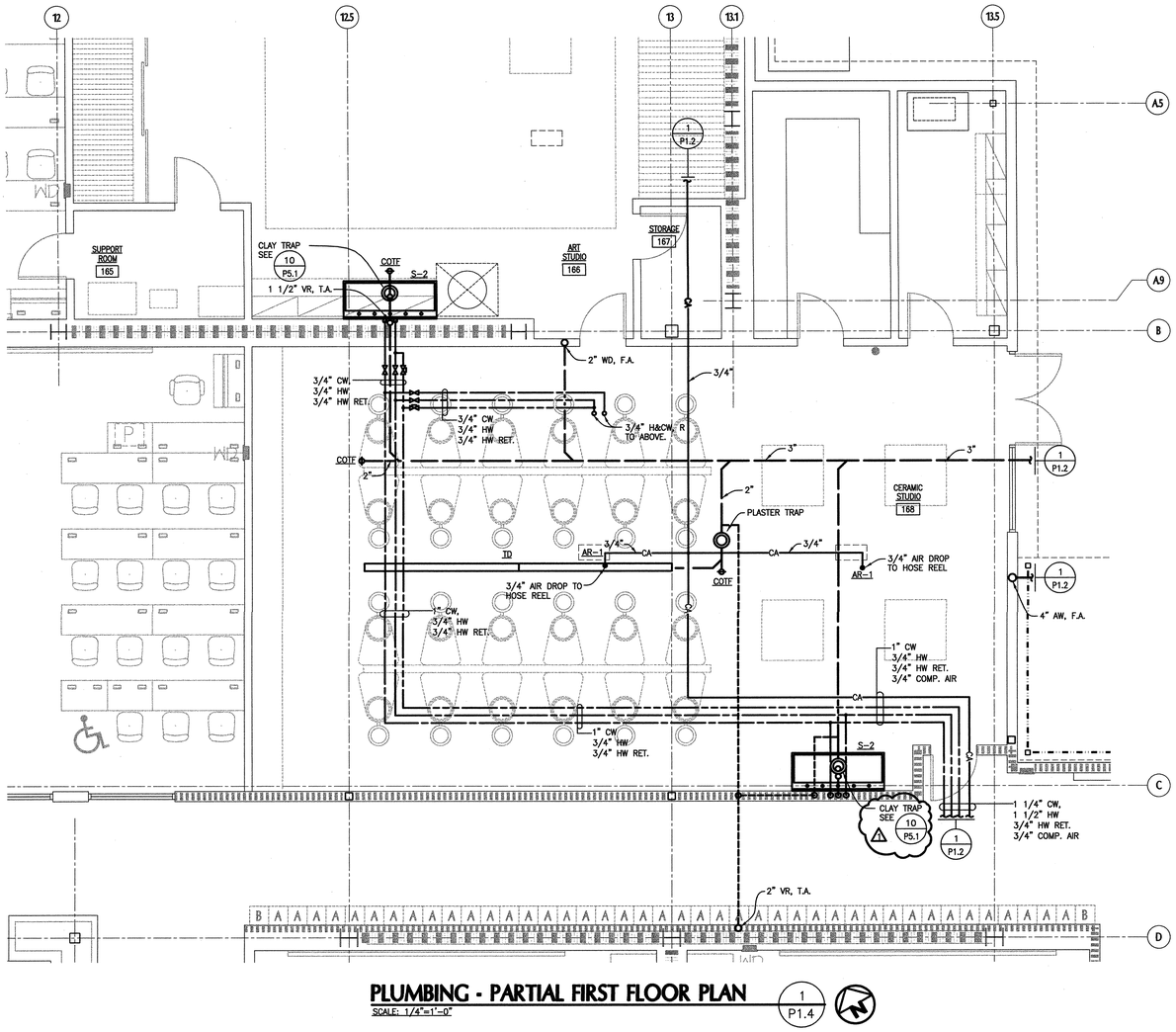

PLUMBING - PARTIAL FIRST FLOOR PLAN 1 P1.4
SCALE: 1/4"=1'-0"

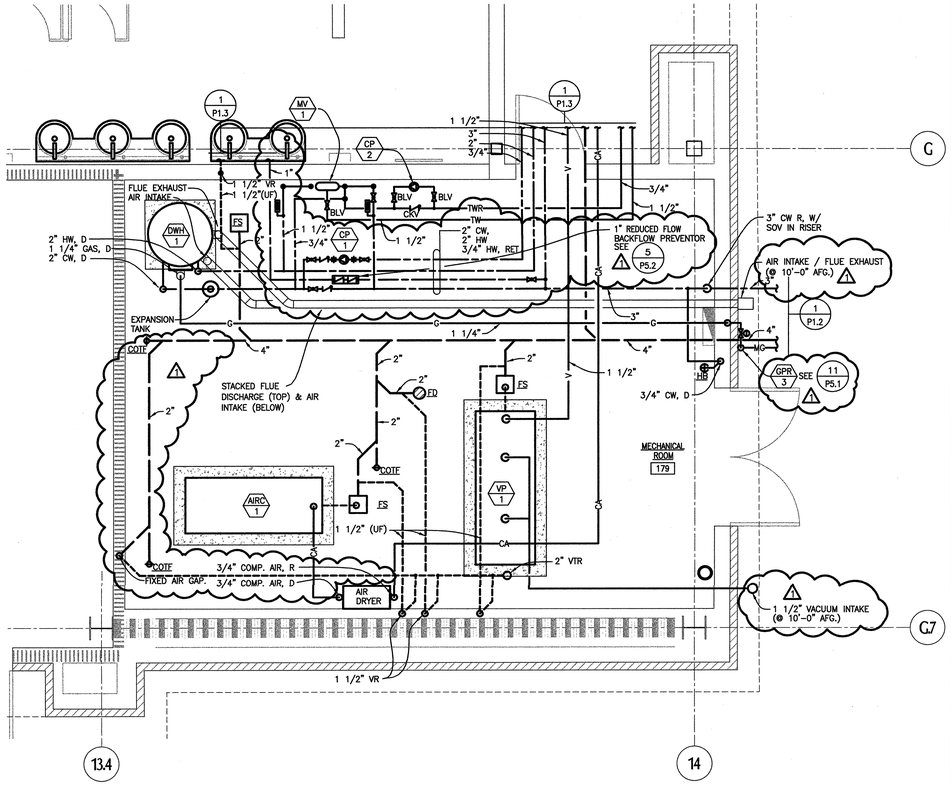

PLUMBING - PARTIAL FIRST FLOOR PLAN 2 P1.4
SCALE: 3/8"=1'-0"

tBP architecture planning interiors management

tBP/Architecture
1000 Burnett Ave, Suite 140
Concord, CA 94520
ph: 925.246.6419 fx: 925.246.6495

architect

AINSWORTH ASSOCIATES
MECHANICAL ENGINEERS
SACRAMENTO, CA
JOB: 2002-088

consultant

APPROVED
DIVISION OF THE STATE ARCHITECT
OFFICE OF REGULATION SERVICES
APPL NO. 105719
AC FS SS
DATE 6-9-04

agency

SAN RAMON VALLEY CENTER

CONTRA COSTA COMMUNITY COLLEGE DISTRICT

SAN RAMON, CALIFORNIA

owner

tBP project number : 20212.00
file name:
drawn by: DW checked by: SA
date: 03-04-04 plot scale: 1:1

Rev:	date:	description:
1	05-26-04	DESIGN CLARIFICATIONS

drawing title: building no.:
PLUMBING - PARTIAL 1ST FLOOR PLANS

drawing no.:
P1.4
drawing of

U:\2002-088\DWG\P1-4.dwg Time:Jun03,2004-04:17pm

150

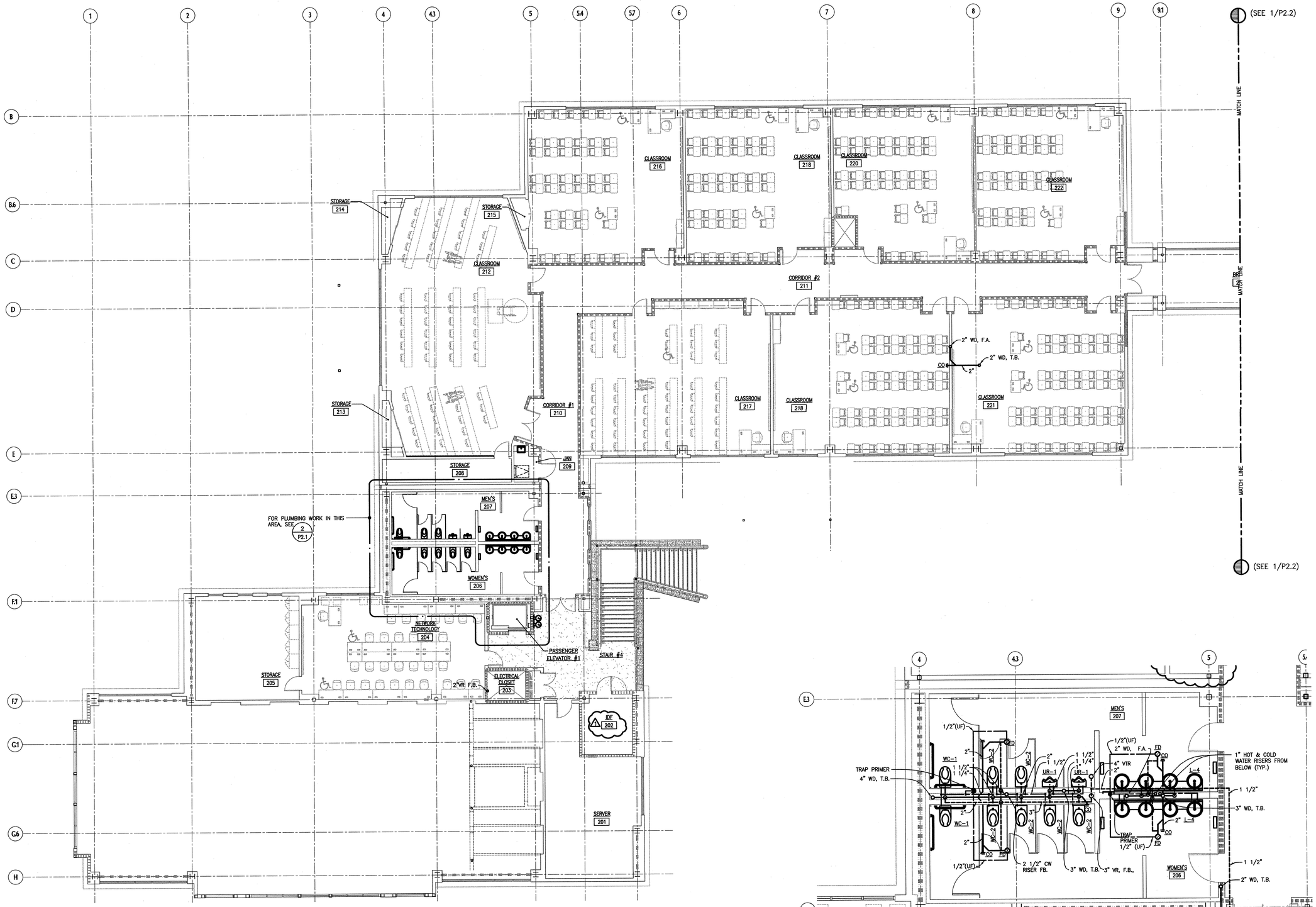

PLUMBING - PARTIAL SECOND FLOOR PLAN

SCALE: 1/8"=1'-0"

1 / P2.1

PLUMBING - PARTIAL SECOND FLOOR PLAN

SCALE: 1/4"=1'-0"

2 / P2.1

tBP
architecture
planning
interiors
management

tBP/Architecture
1000 Burnett Ave, Suite 140
Concord, CA 94520
ph: 925.246.6495 fx: 925.246.6499

architect

AINSWORTH ASSOCIATES
MECHANICAL ENGINEERS
SACRAMENTO, CA
(25-2002-259)

consultant

APPROVED
DEPARTMENT OF GENERAL SERVICES
DIV. OF THE STATE ARCHITECT
OFFICE OF REGIONAL SERVICES
APPL NO. 10-0719
BY
DATE 8-23-04

agency

SAN RAMON VALLEY CENTER

CONTRA COSTA COMMUNITY COLLEGE DISTRICT

SAN RAMON, CALIFORNIA

owner

tBP project number : 20212.00

file name:

drawn by: DW checked by: SA

date: 08-09-04 plot scale: 1:1

Rev:	date:	description:
1	05-26-04	DESIGN CLARIFICATIONS

drawing title: PLUMBING - PARTIAL 2ND FLOOR PLAN

building no.:

drawing no.: P2.1

drawing of

I:\2002-0\BIDWKS\P2-1-4.dwg Tim, Jun03,2004-04:29pm

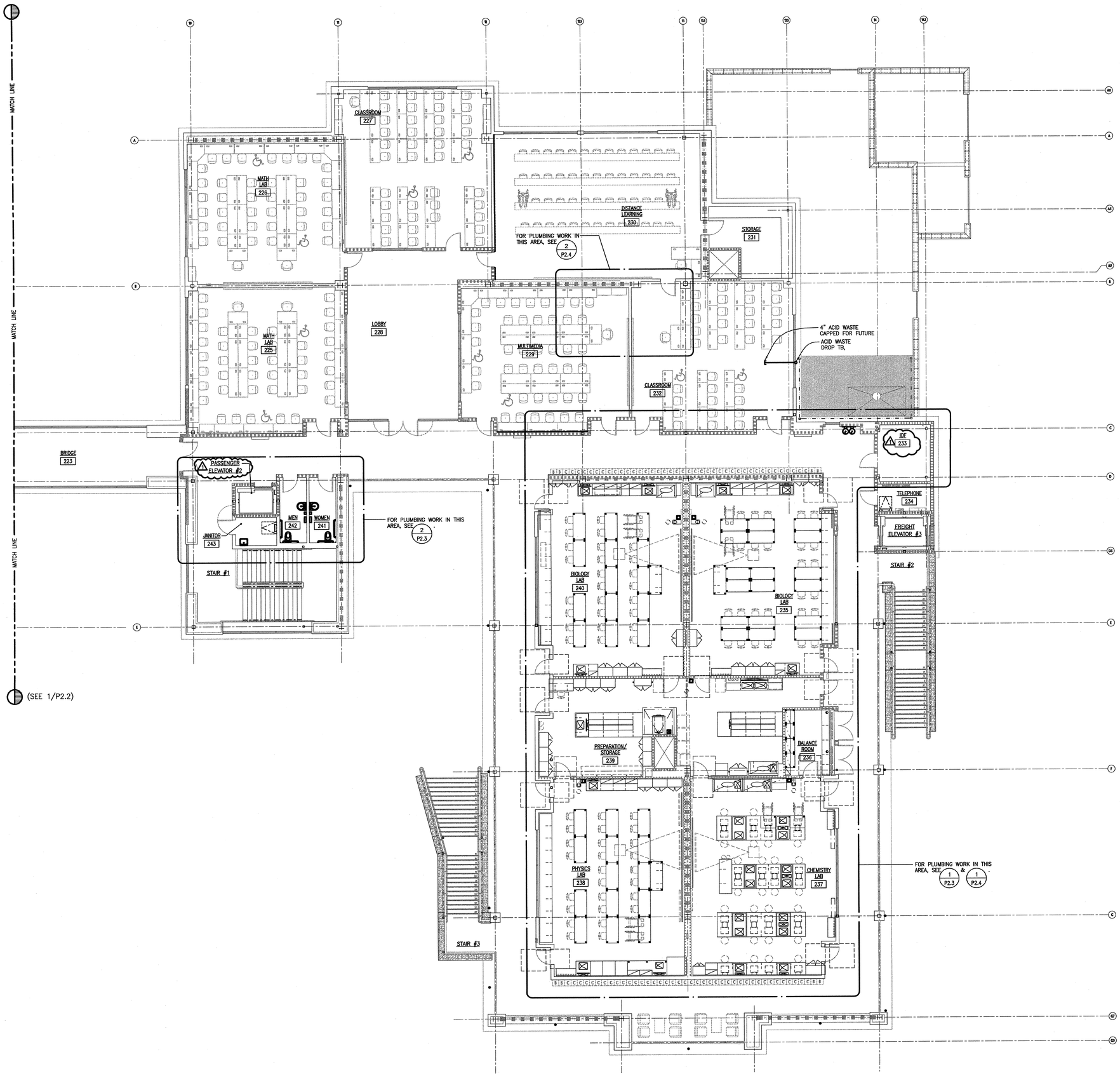

PLUMBING -PARTIAL - SECOND FLOOR

SCALE: 1/8"=1'-0"

1 P2.2

tBP
architecture
planning
interiors
management

tBP/Architecture
1000 Burnett Ave, Suite 140
Concord, CA 94520
ph: 925.246.6419 fx: 925.246.6495

architect

AINSWORTH ASSOCIATES
MECHANICAL ENGINEERS
SACRAMENTO, CA
JOB: 2002-098

consultant

agency

APPROVED
DIV. OF THE STATE ARCHITECT
OFFICE OF REGULATION SERVICES
APPL. NO. 105719
AC
DATE 6-9-04

SAN RAMON VALLEY CENTER

CONTRA COSTA COMMUNITY COLLEGE DISTRICT

SAN RAMON, CALIFORNIA

owner

tBP project number : 20212.00

file name:

drawn by: DW checked by: SA

date: 03-04-04 plot scale: 1:1

Rev:	date:	description:
1	05-26-04	DESIGN CLARIFICATIONS

drawing title: building no.:

PLUMBING - PARTIAL 2ND FLOOR PLAN

drawing no:

P2.2

drawing of

152

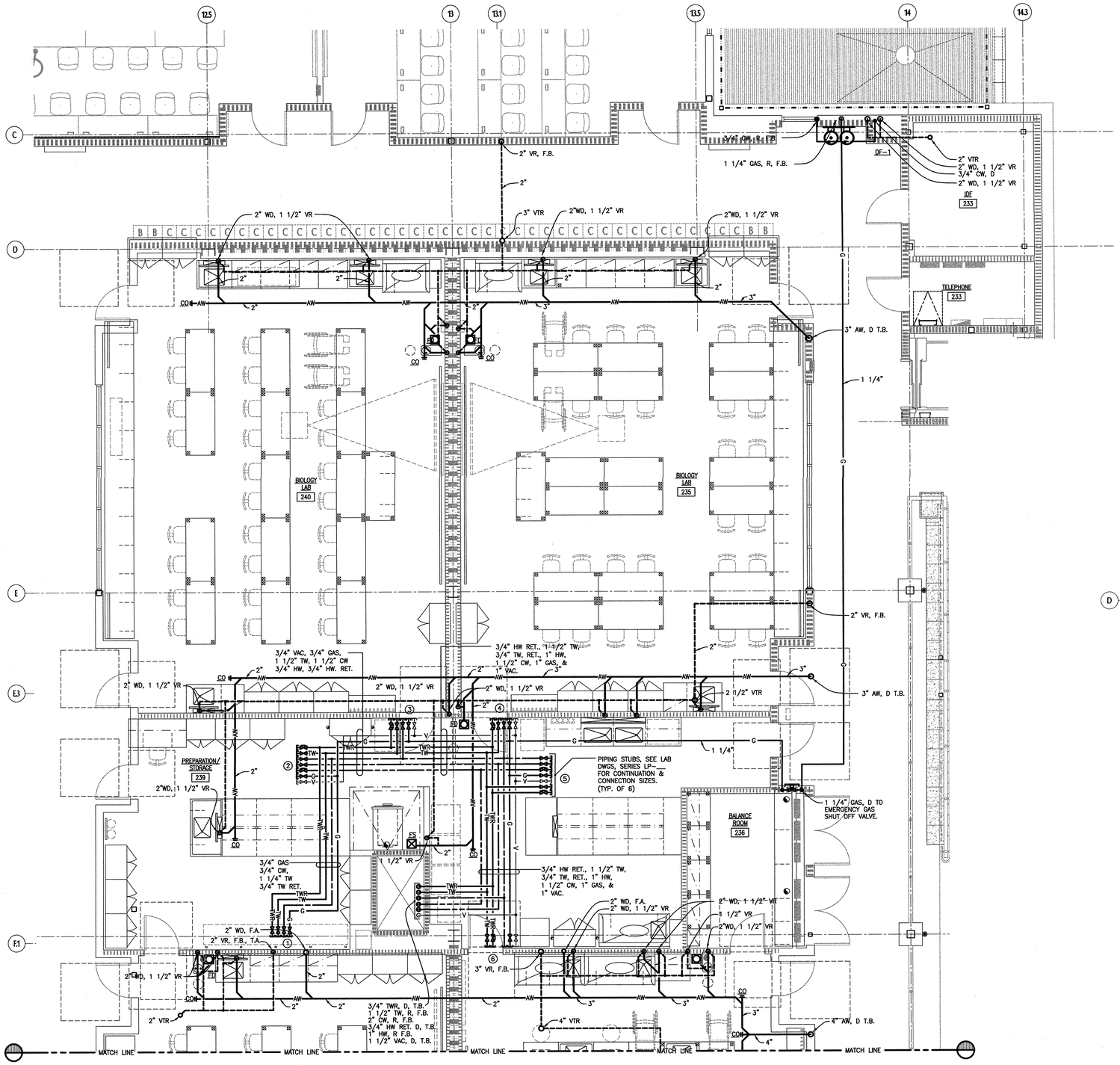

(SEE 1/P2.4)

(SEE 1/P2.4)

PLUMBING - PARTIAL SECOND FLOOR PLAN

SCALE: 1/4"=1'-0"

1 P2.3

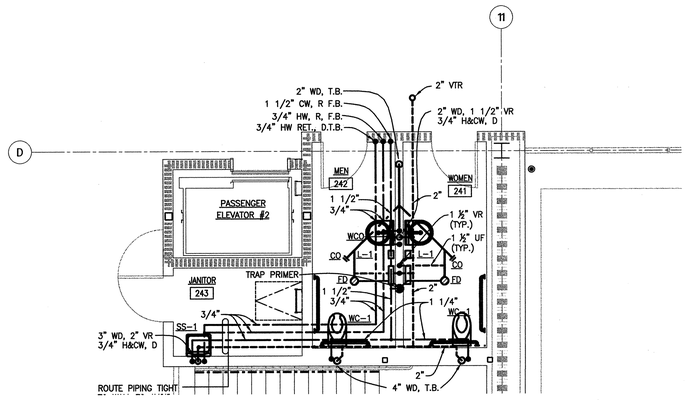

PLUMBING - PARTIAL SECOND FLOOR PLAN

SCALE: 1/4"=1'-0"

2 P2.3

APPROVED
DIV. OF THE STATE ARCHITECT
OFFICE OF REGIONAL MANAGER
APPL NO. 10719
DATE 6-7-04

tBP
architecture
planning
interiors
management

tBP/Architecture
1000 Burnett Ave, Suite 140
Concord, CA 94520
ph: 925.246.6419 fx: 925.246.6495

architect

AINSWORTH ASSOCIATES
MECHANICAL ENGINEERS
SACRAMENTO, CA

consultant

agency

SAN RAMON VALLEY CENTER

CONTRA COSTA COMMUNITY COLLEGE DISTRICT

SAN RAMON, CALIFORNIA

owner

tBP project number : 20212.00
file name:
drawn by: DW checked by: SA
date: 03-04-04 plot scale: 1:1

Rev:	date:	description:
1	05-26-04	DESIGN CLARIFICATIONS

drawing title: PLUMBING - PARTIAL 2ND FLOOR PLAN
building no.:
drawing no.: P2.3
drawing of

J:\2002-Q\BVDWGS\P2-1-4.dwg Tmbs-Jan03,2004-04:29pm

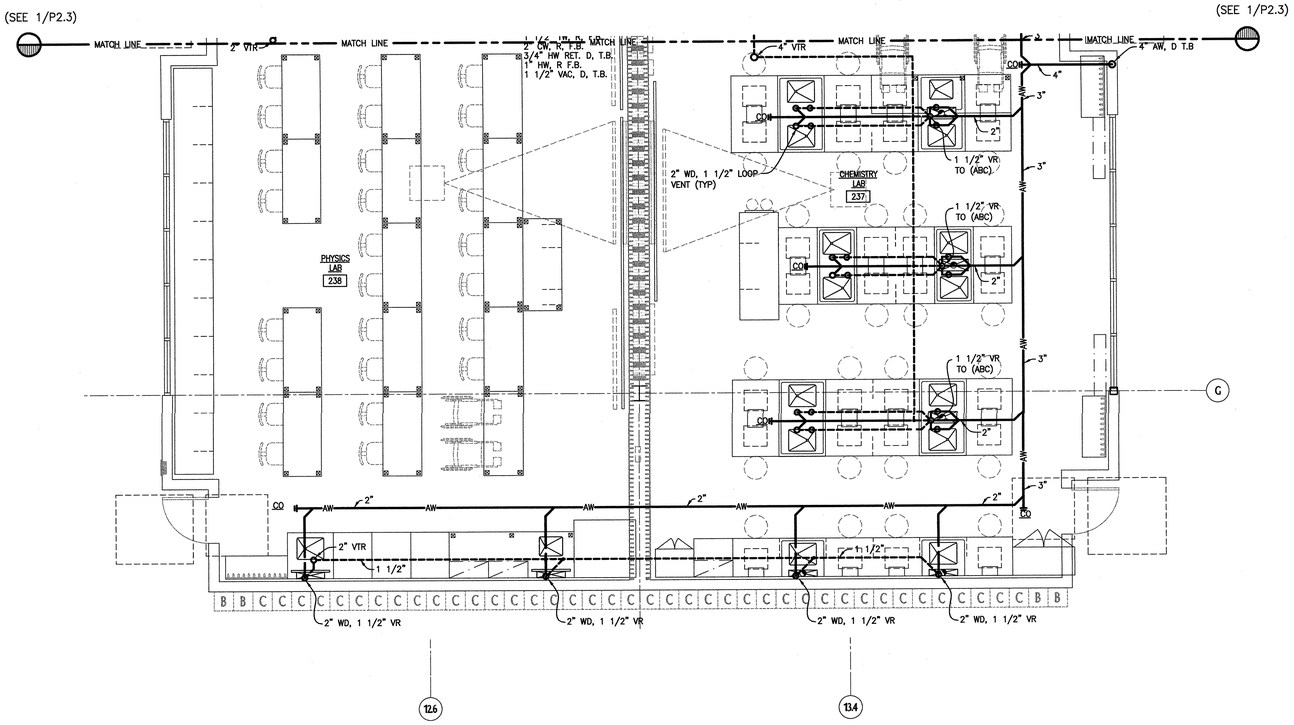

PLUMBING - PARTIAL SECOND FLOOR PLAN

SCALE: 1/4"=1'-0"

2 / P2.4

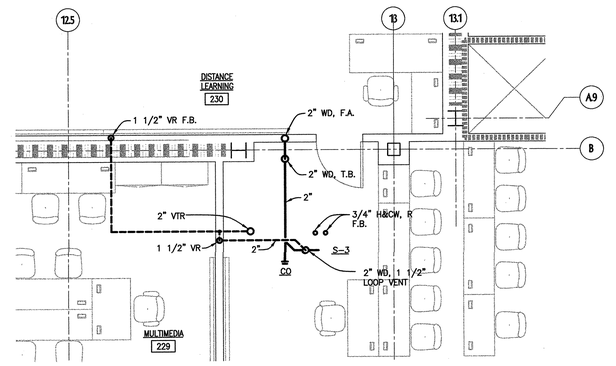

PLUMBING - PARTIAL SECOND FLOOR PLAN

SCALE: 1/4"=1'-0"

1 / P2.4

tBP
architecture
planning
interiors
management

tBP/Architecture
1000 Burnett Ave, Suite 140
Concord, CA 94520
ph: 925.246.6419 fx: 925.246.6495

architect

AINSWORTH ASSOCIATES
MECHANICAL ENGINEERS
SACRAMENTO, CA
(25) 2002-096

consultant

APPROVED
DEPARTMENT OF STATE ARCHITECT
DIVISION OF REGULATION SERVICES
APP. NO. 10519
DATE 5-19-04

agency

SAN RAMON VALLEY CENTER

CONTRA COSTA COMMUNITY COLLEGE DISTRICT

SAN RAMON, CALIFORNIA

owner

tBP project number : 20212.00

file name:

drawn by: DW checked by: SA

date: 03-09-04 plot scale: 1:1

Rev:	date:	description:
1	05-26-04	DESIGN CLARIFICATIONS

drawing title: building no.:

PLUMBING - PARTIAL 2ND FLOOR PLAN

drawing no.:

P2.4

drawing of

I:\2002-2\BOTKE\P2-1-4.dwg Tmsi, Jun/03/2004-04:29pm

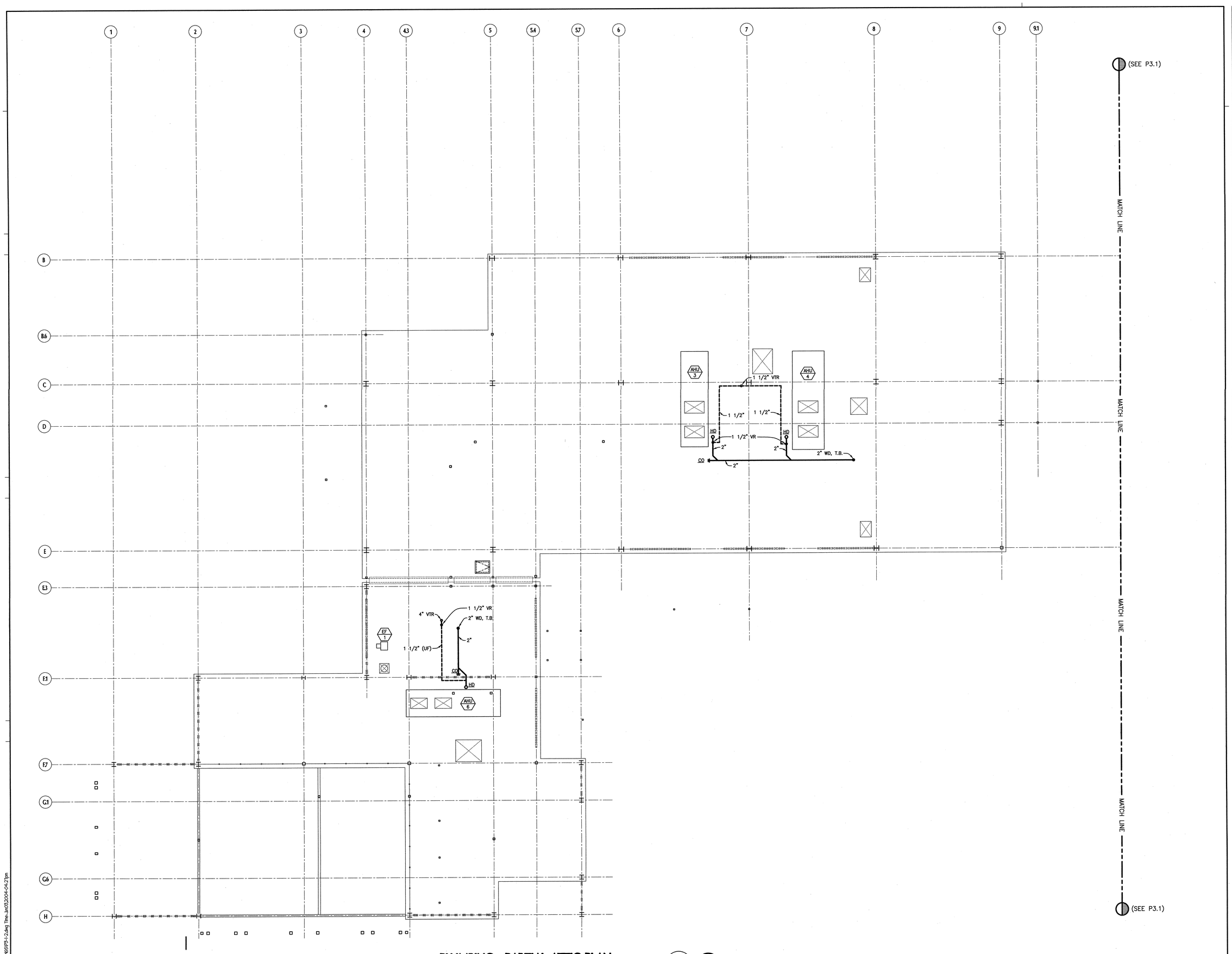

PLUMBING - PARTIAL ATTIC PLAN

SCALE: 1/8"=1'-0"

1 / P3.1

tBP
architecture
planning
interiors
management

tBP/Architecture
1000 Burnett Ave, Suite 140
Concord, CA 94520
ph: 925.246.6419 fx: 925.246.6495

architect

AINSWORTH ASSOCIATES
MECHANICAL ENGINEERS
SACRAMENTO, CA
JOB: 2002-038

consultant

agency

APPROVED
DIV. OF THE STATE ARCHITECT
OFFICE OF REGULATION SERVICES
APPL. NO. 105719
AC. FLS. SS.
DATE 6-9-04

SAN RAMON VALLEY CENTER

CONTRA COSTA COMMUNITY COLLEGE DISTRICT

SAN RAMON, CALIFORNIA

owner

tBP project number : 20212.00

file name:

drawn by: DW checked by: SA

date: 03-04-04 plot scale: 1:1

Rev:	date:	description:
1	05-26-04	DESIGN CLARIFICATIONS

drawing title: PLUMBING - PARTIAL ATTIC PLAN

building no.:

drawing no.: P3.1

drawing of

155

U:\2002-088\DWGS\P3-1-2.dwg Time: Jun 03, 2004 - 04:21pm

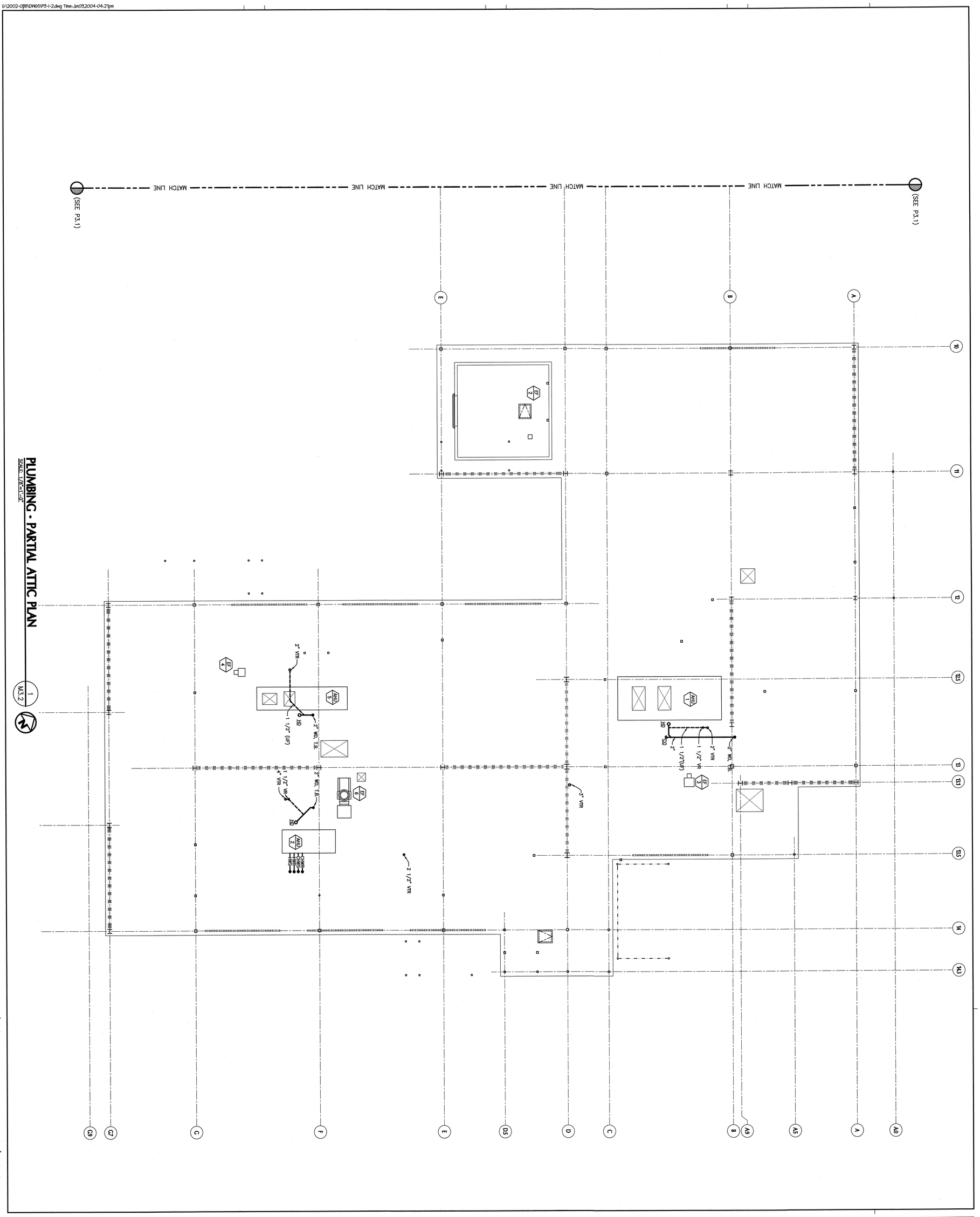

PLUMBING - PARTIAL ATTIC PLAN

SCALE: 1/8"=1'-0"

drawing title:	PLUMBING- PARTIAL ATTIC PLAN
building no:	
drawing no:	P3.2
of drawing	
Rev: date: description:	05-26-04 DESIGN CLARIFICATIONS
drawn by: DN	checked by: SA
date: 03-04-04	plot scale: 1=1
file name:	
tBP project number: 2022.00	owner

SAN RAMON VALLEY CENTER

CONTRA COSTA COMMUNITY COLLEGE DISTRICT

SAN RAMON, CALIFORNIA

agency

APPROVED
IDENTIFICATION STAMP
DIV. OF THE STATE ARCHITECT
OFFICE OF REGULATION SERVICES
APPL NO. 105719
AC. FLS. SS.
DATE 6-9-04

consultant:
AINSWORTH ASSOCIATES
MECHANICAL ENGINEERS
SACRAMENTO, CA
JOB: 2002-036

architect:
tBP/Architecture
1000 Burnett Ave, Suite 140
Concord, CA 94520
ph: 925.246.6419 fx: 925.246.6495

tBP
architecture
planning
interiors
management

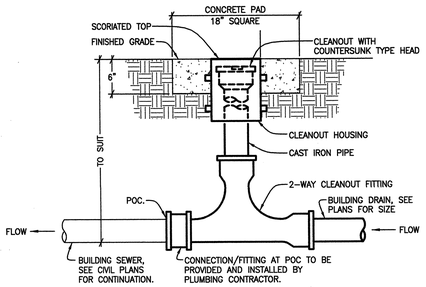

NOTES: 1. PROVIDE TWO WAY CLEANOUT AT ALL SANITARY SEWER AND STORM DRAIN POINTS OF CONNECTION WITH SITE PIPING SYSTEM.
2. PROVIDE ALL FITTINGS AND TRANSITION AS REQUIRED.

2-WAY CLEANOUT AT GRADE DETAIL

NO SCALE

1 / P5.1

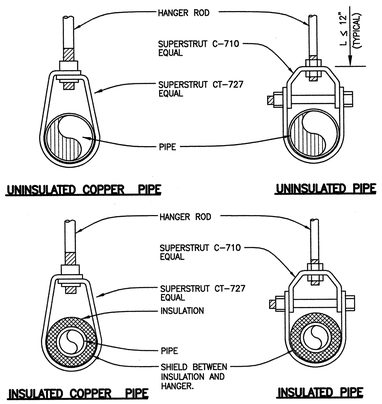

NOTE: FOR HANGER ROD SIZE & SUPPORT DETAIL, SEE 3 / P5.1

PIPE HANGER DETAIL

NO SCALE

4 / P5.1

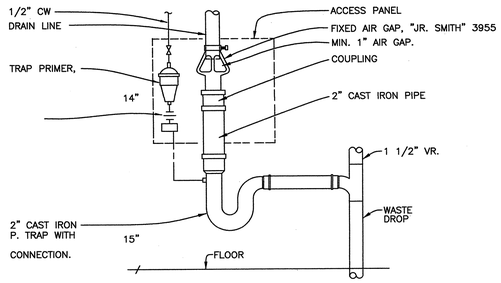

FIXED AIR GAP (FAG) DETAIL

NO SCALE

7 / P5.1

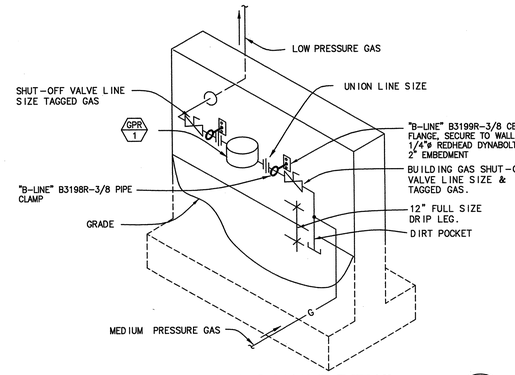

GAS PRESSURE REGULATING VALVE DETAIL

NO SCALE

11 / P5.1

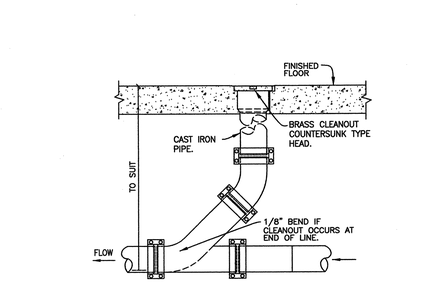

CLEANOUT TO FLOOR DETAIL

NO SCALE

2 / 5.1

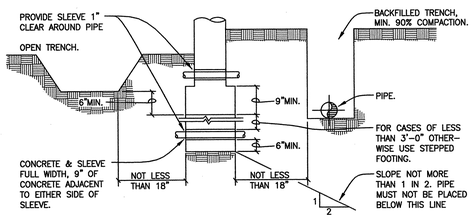

NOTES: 1. REPRESENTATION OF CONDITIONS & REQUIREMENTS SET FORTH IN CALIFORNIA ADMIN. CODE TITLE 24.
2. CONTRACTOR SHALL CONFER WITH GENERAL CONTRACTOR

RELATION OF PIPES & TRENCHES TO FOUNDATIONS

NO SCALE

5 / P5.1

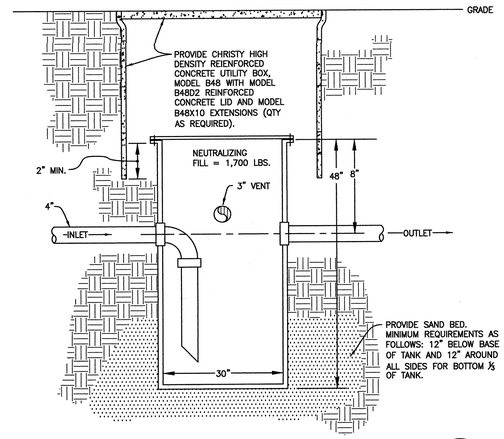

NEUTRALIZING SUMP DETAIL

NO SCALE

NOTE: 1. INSTALL PER MANUFACTURER'S WRITTEN INSTRUCTIONS.

8 / P5.1

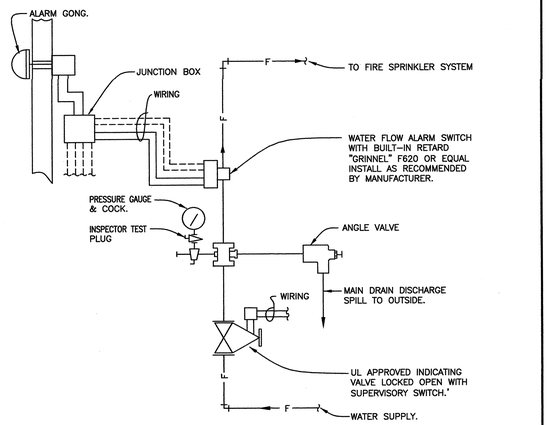

NOTE:
DETAIL IS FOR REFERENCE ONLY, FIRE SPRINKLER RISER (AND SYSTEM) IS DEFERRED APPROVAL, SEE DRAWINGS FOR RISER LOCATION AND SPECIFICATION SECTION 15300 FOR SPRINKLER REQUIREMENTS.

FIRE SPRINKLER RISER DETAIL

NO SCALE

12 / P5.1

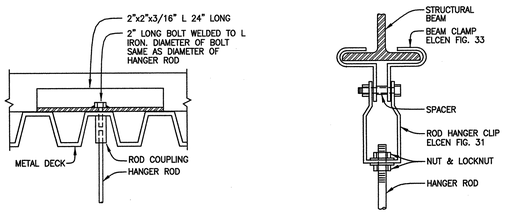

HANGER ROD SCHEDULE	
PIPE SIZE	ROD SIZE
1/2" TO 4"	3/8"ø

HANGER ROD SUPPORT DETAILS

NO SCALE

3 / P5.1

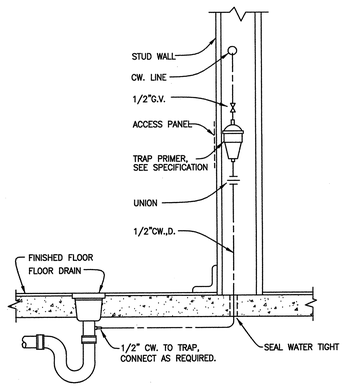

TRAP PRIMER TO FLOOR DRAIN

NO SCALE

6 / P5.1

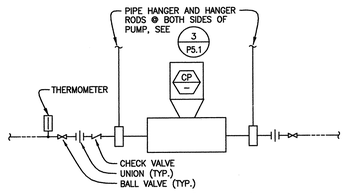

CIRCULATING PUMP PIPING DETAIL

NO SCALE

9 / P5.1

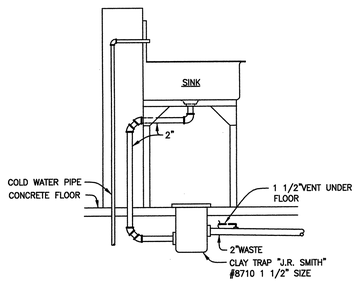

CLAY TRAP UNDER SINK DETAIL

NO SCALE

10 / P5.1

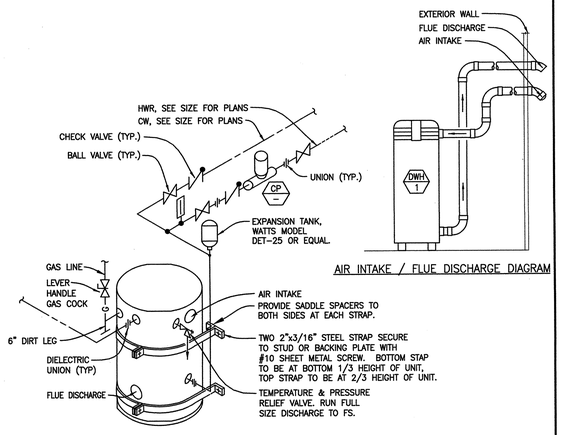

AIR INTAKE / FLUE DISCHARGE DIAGRAM

NOTE: SEE FLOOR PLANS FOR PIPE SIZES

DOMESTIC HOT WATER HEATER DETAIL

NO SCALE

13 / P5.1

tBP
architecture
planning
interiors
management
tBP/Architecture
1000 Burnett Ave, Suite 140
Concord, CA 94520
ph: 925.246.6419 fx: 925.246.6495
architect
AINSWORTH ASSOCIATES
MECHANICAL ENGINEERS
SACRAMENTO, CA
consultant

APPROVED
DIVISION OF THE STATE ARCHITECT
OFFICE OF REGULATION SERVICES
APPL. NO. 1-106719
FILE NO.
ACCESS
DATE 6-9-04

agency

SAN RAMON VALLEY CENTER
CONTRA COSTA COMMUNITY COLLEGE DISTRICT
SAN RAMON, CALIFORNIA

owner

tBP project number: 2021.00
file name:
drawn by: DW checked by: SA
date: 03-04-04 plot scale: 1:1

Rev:	date:	description:
1	05-26-04	DESIGN CLARIFICATIONS

drawing title: PLUMBING - DETAILS
building no.:
drawing no.: P5.1
drawing of

I:\2002-03\DWG\P5-1.dwg Time: Jan/23/2004-04:35pm

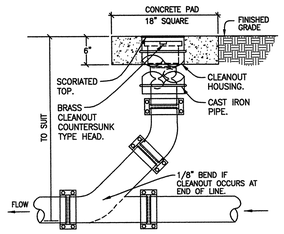

CLEANOUT TO GRADE DETAIL

NO SCALE

1 / P5.2

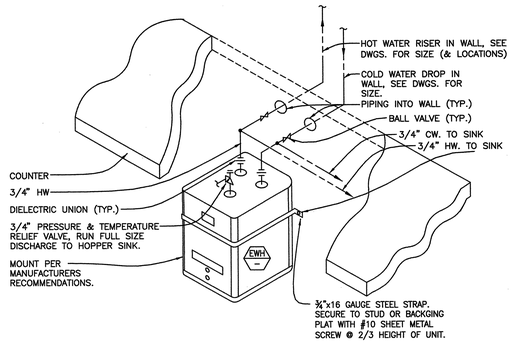

UNDER COUNTER WATER HEATER DETAIL

NO SCALE

4 / P5.2

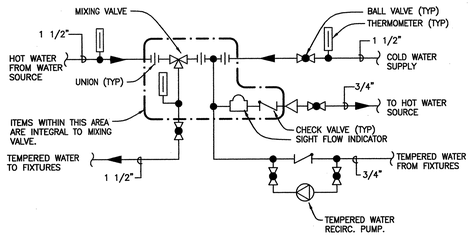

MIXING VALVE PIPING DIAGRAM

NO SCALE

2 / P5.2

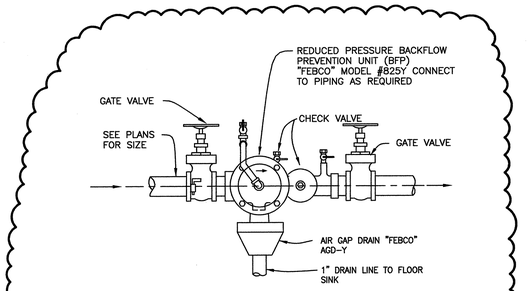

BACKFLOW PREVENTION UNIT DETAIL

NO SCALE

5 / P5.2

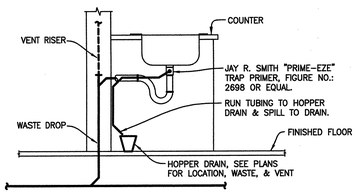

NOTE: INSTALL AT ALL UNDER-COUNTER ELECTRIC WATER HEATER / HOPPER DRAIN LOCATIONS.

HOPPER DRAIN TRAP PRIMER DETAIL

NO SCALE

3 / P5.2

tBP architecture planning interiors management

tBP/Architecture
1000 Burnett Ave, Suite 140
Concord, CA 94520
ph: 925.246.6419 fx: 925.246.6495

architect

AINSWORTH ASSOCIATES
MECHANICAL ENGINEERS
SACRAMENTO, CA
JOB: 2002-038

consultant

APPROVED
DIV. OF THE STATE ARCHITECT
OFFICE OF REGULATION SERVICES
APPL NO. 105719
AC FIS SS
DATE 6-4-04

agency

SAN RAMON VALLEY CENTER

CONTRA COSTA COMMUNITY COLLEGE DISTRICT

SAN RAMON, CALIFORNIA

owner

tBP project number: 20212.00

file name:

drawn by: DW checked by: SA

date: 03-04-04 plot scale: 1:1

Rev:	date:	description:
1	05-26-04	DESIGN CLARIFICATIONS

drawing title: building no.:

PLUMBING - DETAILS

drawing no.:

P5.2

drawing of

\2002-038\DWG\P5-1-2.dwg Time:Jun03,2004-04:35pm

158

LIGHTING FIXTURE SCHEDULE

REFER TO ARCHITECTURAL DRAWINGS FOR CEILING TYPES, FIXTURE MANUFACTURER'S INSTALLATION DETAILS FOR MOUNTING ACCESSORIES AND APPLICABLE CODES FOR REQUIRED FIXTURE SUPPORTS.

TYPE	DESCRIPTION	CATALOG NUMBER	MOUNT	VOLT	LAMPS	REMARKS	APPROX. WEIGHT
A / 62	2'x4' 2-LAMP RECESSED LENSED FLUORESCENT LIGHTING FIXTURE, ELECTRONIC BALLAST	WILLIAMS 50G-S24-232-SA12125-EB2-277	RECESSED	277V	FLUOR (2)32WT8	OR EQUAL METALUX COLUMBIA	24 LBS.
A1 / 62	2'x4' 2-LAMP RECESSED LENSED FLUORESCENT LIGHTING FIXTURE, EMERGENCY BALLAST	WILLIAMS 50G-S24-232-SA12125-EM7-EB2-277 EMERGENCY FIXTURE	RECESSED	277V	FLUOR (2)32WT8	OR EQUAL METALUX COLUMBIA	28 LBS.
A3 / 27	2'x2' 2-LAMP RECESSED LENSED FLUORESCENT LIGHTING FIXTURE, TO MATCH TYPE "3"	WILLIAMS 50G-S22-217-SA12125-EM7-EB2-277 EMERGENCY FIXTURE	RECESSED	277V	FLUOR (2)17WT8	OR EQUAL METALUX COLUMBIA	18 LBS.
B / 93	2'x4' 3-LAMP RECESSED LENSED FLUORESCENT LIGHTING FIXTURE, ELECTRONIC BALLAST	WILLIAMS 50G-S24-332-SA12125-EB3-277	RECESSED	277V	FLUOR (3)32WT8	OR EQUAL METALUX COLUMBIA	28 LBS.
B1 / 93	2'x4' 3-LAMP RECESSED LENSED FLUORESCENT LIGHTING FIXTURE, EMERGENCY BALLAST	WILLIAMS 50G-S24-332-SA12125-EM7-EB3-277 EMERGENCY FIXTURE	RECESSED	277V	FLUOR (3)32WT8	OR EQUAL METALUX COLUMBIA	30 LBS.
C / 62	2'x4' 2-LAMP RECESSED PARABOLIC FLUORESCENT LIGHTING FIXTURE, ELECTRONIC BALLAST	WILLIAMS HE3G-D24-232-26S-EB2-277	RECESSED	277V	FLUOR (2)32WT8	OR EQUAL METALUX COLUMBIA	32 LBS.
C1 / 62	2'x4' 2-LAMP RECESSED PARABOLIC FLUORESCENT LIGHTING FIXTURE, EMERGENCY BALLAST	WILLIAMS HE3G-D24-232-26S-EM7-EB2-277 EMERGENCY FIXTURE	RECESSED	277V	FLUOR (2)32WT8	OR EQUAL METALUX COLUMBIA	33 LBS.
D / 93	2'x4' 3-LAMP RECESSED PARABOLIC FLUORESCENT LIGHTING FIXTURE, ELECTRONIC DIMMING BALLAST	WILLIAMS HE3G-D24-332-36S-EBD3-277- LUTRON HI-LUME	RECESSED	277V	FLUOR (3)32WT8	OR EQUAL METALUX COLUMBIA	33 LBS.
D1 / 93	2'x4' 3-LAMP RECESSED PARABOLIC FLUORESCENT LIGHTING FIXTURE, DIMMING AND EMERGENCY BALLAST	WILLIAMS HE3G-D24-332-36S-EM7-EBD3-277- LUTRON HI-LUME EMERGENCY FIXTURE	RECESSED	277V	FLUOR (3)32WT8	OR EQUAL METALUX COLUMBIA	35 LBS.
⊗ | ⊗	EXIT LIGHT, LED TYPE, W/EMERGENCY BATTERY PACK, SINGLE OR DOUBLE FACE AS INDICATED	PRESCOLITE XT SERIES -G- EN-DL-WH EMERGENCY FIXTURE, WALL OR CEILING MOUNT	SURFACE	277V	LED	OR EQUAL EMERGILITE SURE-LITE	9 LBS.
F / 32	RECESSED FLUORESCENT DOWNLIGHT, 1-LAMP, 32W, TRIPLE TUBE, ELECTRONIC BALLAST	PRESCOLITE CFT632HEB- STF602H-SL	RECESSED	277V	FLUOR (1)32W TT	OR EQUAL KURT VERSEN LIGHTOLIER	10 LBS.
F1 / 32	RECESSED FLUORESCENT DOWNLIGHT, 1-LAMP, 32W, TRIPLE TUBE, EMERGENCY BALLAST	PRESCOLITE CFT632HEB- EM-STF602H-SL EMERGENCY FIXTURE	RECESSED	277V	FLUOR (1)32W TT	OR EQUAL KURT VERSEN LIGHTOLIER	10 LBS.
G / 38	RECESSED FLUORESCENT DOWNLIGHT, 2-LAMP, 18W, QUAD TUBE W/GASKET, ELECTRONIC BALLAST	PRESCOLITE CF1018-RD-EB-90F8-TLG-TRG	RECESSED	277V	FLUOR (2)18WTT	OR EQUAL MCPHILBEN GOTHAM	10 LBS.
G1 / 38	RECESSED FLUORESCENT DOWNLIGHT, 2-LAMP, 18W, QUAD TUBE W/GASKET, EMERGENCY BALLAST	PRESCOLITE CF1018-RD-EB-EM-90F8-TLG-TRG EMERGENCY FIXTURE	RECESSED	277V	FLUOR (2)18W QUAD	OR EQUAL MCPHILBEN GOTHAM	12 LBS.
H / 32	WALL MOUNT FLUORESCENT 1-LAMP PER 4 FT. OVER MIRROR, ELECTRONIC BALLAST	COLUMBIA WAL-4-132-EB8LH-277V	SURFACE	277V	FLUOR (1)32W T8	OR EQUAL MARK METALUX	14 LBS.
H1 / 32	WALL MOUNT FLUORESCENT 1-LAMP PER 4 FT. OVER MIRROR, EMERGENCY BALLAST	COLUMBIA WAL-4-132-EB8LH-277V EMERGENCY FIXTURE	SURFACE	277V	FLUOR (1)32W T8	OR EQUAL MARK METALUX	15 LBS.
I / ---	TRACK LIGHTING WITH HEADS AS INDICATED	PRESCOLITE TS SERIES LIGHT TRACK - LENGTH AS SHOWN WITH (1) #TV163 75W PAR PER 6' TRACK SECTION. PROVIDE ALL MOUNTING HARDWARE, CONNECTORS, BOXES	SURFACE	120V	INCAND 75W PAR	OR EQUAL LIGHTOLIER HALO	6 LBS. PER 4' SECT.
J / 32	WALL MOUNTED FLUORESCENT, WP, 1-LAMP, 26W,QUAD	BEGA 2438P, FACING DOWN, COLOR AS SELECTED	SURFACE	277V	FLUOR (1)262W Q	OR EQUAL MCPHILBEN AAL	34 LBS.
K / 32	WALL MOUNTED DECORATIVE SCONCE, 1-LAMP, 32W, TT	ARCHITECTURAL AREA LIGHTING USC-FLR32WT4PIN LAMP BLACK FINISH OR PER ARCHITECTS SELECTION, WCV WALL MOUNT CURVED ARM, BALLAST ENCLOSURE.	SURFACE WALL	277V	FLUOR (1)32W TT	OR EQUAL BEGA POULSEN	38 LBS.
L / 350	PENDANT MOUNT DECORATIVE FLOURESCENT FIXTURE, 200W MAX. SPECIAL, 1-BALLAST WITH EMERGENCY BATTERY BACKUP	VISA CP3190, 42" DIA, 48" OH, POLISHED CHROME FIN. OR AAS SELECTED BY ARCHITECT,EM BATTERY PACK, 45 DEG SWIVEL CANOPY - 277V	PENDANT	277V	FLUOR (9) F39 BIAX	OR EQUAL WILA MANNING	48 LBS.
M / 32	RECESSED LINEAR 1-LAMP FLUORESCENT, BATHROOMS	ALERA AL-1T8R4-N-A12-EB8277-S LENGTH AS INDICATED, CONTIN. RUN	RECESSED	277V	FLUOR (1)32W T8/4'	OR EQUAL NEO-RAY PEERLESS	16 LBS. PER 4' SECT.
M1 / 32	RECESSED LINEAR 1-LAMP FLUORESCENT, BATHROOMS EMERGENCY BALLAST	ALERA AL-1T8R4-N-A12-EB8277-S-EL EMERGENCY FIXTURE, LENGTH AS INDICATED, CONTIN. RUN	RECESSED	277V	FLUOR (1)32W T8	OR EQUAL NEO-RAY PEERLESS	19 LBS. PER 4' SECT.
N / 32	SURFACE MOUNTED FLUORESCENT, 1-LAMP, LENSED FIXTURE	MARK MH5-132	SURFACE	277V	FLUOR (1)32W T8	OR EQUAL METALUX COLUMBIA	13 LBS.
O / 18	RECESSED SHOWER LIGHT, 1-LAMP, 18W, WP	PRESCOLITE TBX --TL3 LEXAN SHOWER LENS WET LOCATION LABLE	RECESSED	277V	FLUOR (1)18W DT	OR EQUAL GOTHAM LIGHTOLIER	9 LBS.
P / 32	SUSPENDED FLUORESCENT STRIP LIGHT W/WIRE GUARD, 1-LAMP, ELECTRONIC BALLAST	WILLIAMS 76-4-132-WG11EB1-277V STEM HANGER AS REQUIRED.	STEM OR SURFACE	277V	FLUOR (1)32W T8	OR EQUAL COLUMBIA METALUX	14 LBS.
P1 / 32	SUSPENDED FLUORESCENT STRIP LIGHT W/WIRE GUARD, 1-LAMP, EMERGENCY BALLAST	WILLIAMS 76-4-132-WG11EB1-EM7-277V STEM HANGER AS REQUIRED. EMERGENCY FIXTURE	STEM OR SURFACE	277V	FLUOR (1)32W T8	OR EQUAL COLUMBIA METALUX	15 LBS.
Q / 64	LINEAR PENDANT MOUNTED FLUORESCENT UPLIGHT, 2-LAMPS PER 4 ft., LENGTH AS INDICATED	FOCALPOINT VERVE II FV2-29-B-2T8-E-277-18" SUSPENSION-WH- LENGTH AS INDICATED WIEH (2) EM EACH RUN- CABLE SUSPENSION.	CABLE	277V	FLUOR (2)32W T8/4'	OR EQUAL ALERA PEERLESS	21 LBS. PER 4' SECT.
R / 62	SUSPENDED FLUORESCENT STRIP LIGHT W/WIRE GUARD, 2-LAMP	WILLIAMS 76-4-232-WG11EB2-277V STEM HANGER AS REQUIRED.	STEM OR SURFACE	277V	FLUOR (2)32W T8	OR EQUAL COLUMBIA METALUX	16 LBS.
R1 / 62	SUSPENDED FLUORESCENT STRIP LIGHT W/WIRE GUARD, 2-LAMP, EMERGENCY BALLAST	WILLIAMS 76-4-232-WG11EB2-EM7-277V STEM HANGER AS REQUIRED. EMERGENCY FIXTURE	STEM OR SURFACE	277V	FLUOR (2)32W T8	OR EQUAL COLUMBIA METALUX	17 LBS.
S / 53	2'x2' RECESSED PARABOLIC, 3-LAMP, TO MATCH TYPE "D" FIXTURE, DIMMING BALLAST	WILLIAMS U3G-D22-317-33S-EBD3-277- LUTRON HI-LUME	RECESSED	277V	FLUOR (3)17W T8	OR EQUAL METALUX COLUMBIA	19 LBS.
T / 26	FLUORESCENT WALL SCONCE, TO MATCH TYPE "L" FIXTURE	MANNING DS-66-13-C- PLC2-13W, 13"WIDE,10"H ACRYLIC BOWL, FINISH TO BE SELECTED BY ARCH'T.DDEDIT	WALL	277V	FLUOR (2)13W PLC	OR EQUAL WILA SHAPER	14 LBS.
U / 124	FLUORESCENT TUBE LIGHT, MOUNT TO MULLIONS ON STRUCTURE, 8'-0" LONG	ALERA-IT6-2D-T8-CM-12" SUSPENSION-CLA-EB8LH 277V MW-8'-SGL-EL WITH EMERGENCY BALLAST	CABLE	277V	FLUOR (2)32W T8/4'	OR EQUAL NEO-RAY PEERLESS	22 LBS.
V / 175	METAL HALIDE WALL PACK	LUMARK MHWL-175-MT W/ CWA/HPF BALLAST 277V WG/WL	WALL	277V	MET HAL. (1) 175W	OR EQUAL AAL HUBBELL	31 LBS.

ALL FLUORESCENT LAMPS SHALL BE 3000'K WITH 830 PHOSPHORS

IF ABSOLUTELY DESIGNED TO ENJOY WHAT YOU DO

159

ELECTRICAL SYMBOLS

SYMBOL	DESCRIPTION
———	CONCEALED CONDUIT IN WALL OR CEILING
— - —	CONCEALED CONDUIT IN FLOOR
- - - - -	EXPOSED CONDUIT
——o	CONDUIT TURNING UP
——•	CONDUIT TURNING DOWN
A-1,3	HOMERUN TO PANEL "A", CIRCUIT NUMBERS "1" AND "3"
~~	FLEXIBLE CONDUIT
—G—	GROUND CONDUCTOR
—T—	TELEPHONE OR DATA SYSTEM CONDUIT
—TV—	TELEVISION SYSTEM CONDUIT
J	CEILING MOUNTED JUNCTION BOX OR ABOVE CEILING NOTED "AC"
JH	WALL MOUNTED JUNCTION BOX
3 a	FLUORESCENT LIGHTING FIXTURE CONTROLLED BY SWITCH "a", ON CIRCUIT "3", TYPICAL DESIGNATION FOR ALL OUTLETS
	FLUORESCENT LIGHTING FIXTURE, SHADING INDICATES FIXTURE IS ON EMERGENCY CIRCUIT
	FLUORESCENT LIGHTING FIXTURE, WALL MOUNTED
EM / EM / EM / EM	LIGHTING FIXTURES WITH EMERGENCY BATTERY BACKUP
	PENDANT MOUNT FLUORESCENT LIGHTING FIXTURE, LENGTH AS INDICATED
	"STRIP" FLUORESCENT LIGHTING FIXTURE
	INCANDESCENT, COMPACT FLUORESCENT OR HIGH INTENSITY DISCHARGE LIGHTING FIXTURE, CEILING MOUNTED, AS NOTED
	INCANDESCENT, COMPACT FLUORESCENT OR HIGH INTENSITY DISCHARGE LIGHTING FIXTURE, WALL MOUNTED, AS NOTED
	INCANDESCENT, COMPACT FLUORESCENT OR HIGH INTENSITY DISCHARGE LIGHTING FIXTURE, RECESSED CEILING MOUNTED, AS NOTED
	INCANDESCENT, COMPACT FLUORESCENT OR HIGH INTENSITY DISCHARGE LIGHTING, "WALL WASH" FIXTURE, RECESSED CEILING MOUNTED, AS NOTED
	PENDANT MOUNTED FLUORESCENT LIGHTING FIXTURE
	DECORATIVE WALL MOUNTED LIGHTING FIXTURE
	EXIT LIGHT, CEILING MOUNTED WITH INDICATED DIRECTIONAL ARROWS. SHADED AREA(S) INDICATES ILLUMINATED FACE(S)
⊗	EXIT LIGHT, SAME AS ⊗ EXCEPT WALL MOUNTED
B	EMERGENCY BATTERY UNIT WITH INDICATED HEADS
	LIGHT TRACK, AS NOTED
S	SINGLE POLE SWITCH; MOUNT AT +48"AFF UNLESS NOTED
S_2	DOUBLE POLE SWITCH; MOUNT AT +48"AFF UNLESS NOTED
S_3	"3-WAY" SWITCH; MOUNT AT +48"AFF UNLESS NOTED
S_M	MANUAL MOTOR STARTER; MOUNT AT +48"AFF UNLESS NOTED
S_a	SWITCH CONTROLLING OUTLET "a"; MOUNT AT +48"AFF UNLESS NOTED
S_K	KEY OPERATED SWITCH; MOUNT AT +48"AFF UNLESS NOTED
S_P	SWITCH WITH PILOT LIGHT
S_{DT}	DIGITAL TIMER FOR TOILET ROOMS
S_D	DIMMER SWITCH, LUTRON, SIZE AS INDICATED; MOUNTD AT +48"AFF
D3 OS	OCCUPANCY SENSOR, CEILING MOUNTED, WATT STOPPER #DT-300
OS	OCCUPANCY SENSOR, WALL MOUNTED, WATT STOPPER #WS-200; MOUNT AT +48"AFF
D OS	OCCUPANCY SENSOR, DUAL LEVEL, WALL MOUNTED, WATT STOPPER #WI-300; MOUNT AT +48"AFF
1	OCCUPANCY SENSOR, CEILING MOUNTED, WATT STOPPER #WT-1100
2	OCCUPANCY SENSOR, CEILING MOUNTED, WATT STOPPER #WT-2200
6	OCCUPANCY SENSOR, CEILING MOUNTED, WATT STOPPER #WT-600
	SNAKETRAY, (SINGLE, 6"x6") CONTINUOUS RUN
	SNAKETRAY, (DOUBLE, 6"x6") CONTINUOUS RUN
WD	WIREMOLD WALL DUCT; 10"x3 1/2", FLOOR TO ABOVE CEILING WITH OPENING BELOW FLOOR
—C—	COMMUNICATIONS CONDUIT; 4" OR AS NOTED
	STARLINE 60A, 120/208V BUS DUCT IN COMMUNICATIONS ROOMS
SP	SWITCHING PACK RELAY FOR OCCUPANCY SENSOR

ELECTRICAL SYMBOLS

SYMBOL	DESCRIPTION
FR	FLOOR BOX FOR COMMUNICATIONS AND (2) DUPLEX RECEPTACLES; "FR" = MOUNTED IN RAISED FLOOR, "FS" = MOUNTED IN FLOOR SLAB
FWR	FLOOR BOX FOR 8-WIRE FURNITURE WHIP CONNECTION; "FWR" = IN RAISED FLOOR, "FWS" = IN FLOOR SLAB
FS OR FR	FLOOR BOX FOR COMMUNICATIONS ONLY
	DATA OR TELE. OUTLET, WALL MOUNTED WITH 1 1/4" CONDUIT RUN TO ABOVE CEILING OUTLET BOXES 4 11/16" SQUARE x 2 1/8" DEEP, WITH 2 GANG PLASTER RING UNLESS NOTED
FS OR FR A	FLOOR BOX FOR AUDIO VISUAL AND (1) DUPLEX RECEPTACLE
FS OR FR A	FLOOR BOX FOR AUDIO VISUAL AND (2) DUPLEX RECEPTACLES
W JH	JUNCTION BOX FOR 8-WIRE FURNITURE WHIP, WALL MOUNTED
	DUPLEX CONVENIENCE RECEPTACLE, WALL MOUNTED
	DUPLEX CONVENIENCE RECEPTACLE, FLOOR MOUNTED
	SPECIAL PURPOSE RECEPTACLE, RATING AS NOTED, WALL MOUNTED
	SPECIAL PURPOSE RECEPTACLE, RATING AS NOTED, FLOOR MOUNTED
	DOUBLE DUPLEX RECEPTACLE UNDER ONE COVER PLATE; MOUNT AT 18"AFF UNLESS NOTED
	ISOLATED GROUND DUPLEX RECEPTACLE
	DUPLEX RECEPTACLE, HALF SWITCHED; MOUNT AT 18"AFF UNLESS NOTED
	CLOCK OUTLET, WALL MOUNTED; BATTERY TYPE, BY OWNER
S	SPEAKER, CEILING MOUNTED; SPEAKER BY OTHERS, INSTALLED IN CEILING BY CONTRACTOR
SH	SPEAKER, WALL MOUNTED
MH	MAGNETIC DOOR HOLDER
DH	ELECTRIC DOOR LOCK
	PUSHBUTTON STATION, TYPE AS NOTED, MOUNTING HEIGHT AS NOTED
BH	BREAK GLASS STATION, WALL MOUNTED; MOUNT AT +48"AFF
TVH	TELEVISION ANTENNA OUTLET; MOUNT AT +48"AFF UNLESS NOTED
EH	BOILER EMERGENCY SHUTDOWN SWITCH, NUMBER OF POLES AS REQUIRED
K	KEY INTERLOCK
	PANELBOARD, (120/208V) SURFACE MOUNTED
	PANELBOARD, (120/208V) FLUSH MOUNTED
	PANELBOARD, (277/480V) SURFACE MOUNTED
	PANELBOARD, (277/480V) FLUSH MOUNTED
	POWER DISTRIBUTION PANEL OR SWITCHBOARD, AS INDICATED
	MOTOR OUTLET
30 3P 15	DISCONNECT SWITCH, SIZE AS INDICATED, (30 AMPERE RATING, 3-POLE), NON-FUSIBLE UNLESS FUSE SIZE (15 AMPERE) IS SHOWN ALONGSIDE SWITCH OR AS NOTED
	MAGNETIC MOTOR CONTROLLER
	FUSE, TYPE AND SIZE AS NOTED
	ELECTRICAL CONNECTION
225AF/70AT	CIRCUIT BREAKER WITH 225 AMP FRAME AND 70 AMP TRIP
T	TRANSFORMER
	POTENTIAL TRANSFORMER, RATING AS NOTED
	CURRENT TRANSFORMER, RATING AS NOTED
A	AMMETER, SCALE AS NOTED
V	VOLTMETER
	GROUND ROD
	GROUND ROD IN GROUND WELL
3	NOTE REFERENCE; "SEE NOTE #3 ON THIS SHEET"
A 62	LIGHTING FIXTURE TYPE "A", "62" WATTS INPUT; SEE FIXTURE SCHEDULE
A 4.01	DETAIL REFERENCE; "SEE DETAIL "A" ON SHEET "E4.01"

ABBREVIATIONS:

A	AMPERE	MCM OR KCMIL	THOUSAND CIRCULAR MILS
AFF	ABOVE FINISHED FLOOR	(N)	NEW
AL	ALUMINUM	NTS	NOT TO SCALE
C	CONDUIT	P	POLE
CAT	CATALOG	(RL)	RELOCATE
CB	CIRCUIT BREAKER	(RLD)	RELOCATED
CO	CONDUIT ONLY	(R)	REMOVE
CU	COPPER	(RT)	RETAIN
(E)	EXISTING	TYP	TYPICAL
G	GROUND	UON	UNLESS OTHERWISE NOTED
GFI	GROUND FAULT INTERRUPTER	V	VOLT
KVA	KILOVOLT AMPERE	VA	VOLTAMPS
KW	KILOWATT	VIF	VERIFY IN FIELD
		WP	WEATHERPROOF

NOTE: SYMBOLS LISTED ARE FOR GENERAL USE.
DISREGARD ANY SYMBOLS THAT ARE NOT USED ON PLAN.
SEE FIRE ALARM DRAWINGS FOR ADDITIONAL SYMBOLS.

GENERAL NOTES

1. PENETRATIONS OF PIPES, CONDUITS, ETC. IN WALLS REQUIRING PROTECTED OPENINGS SHALL BE AL SHALL BE TESTED ASSEMBLY APPROVED BY THE STATE FIRE MARSHAL. REFER TO ARCHITECTURAL DRAWINGS FOR PENETRATION DETAILS.
2. EACH RECEPTACLE AND FIXED ELECTRICAL EQUIPMENT SHALL BE GROUNDED BY MEANS OF AN INSULATED COPPER CONDUCTOR (MINIMUM #12 AWG) SIZES IN ACCORDANCE WITH C.E.C. TABLE 250-95.
3. ALL RECEPTACLE COVERPLATES SHALL BE LABELED WITH THE PANELBOARD AND CIRCUIT NUMBER SUPPLYING THE DEVICE.
4. ALL EMPTY CONDUITS SHALL BE SUPPLIED WITH NYLON PULL STRING.
5. REFER TO INTERIOR ELEVATIONS OF ARCHITECTURAL DRAWINGS FOR LOCATION OF ELECTRICAL DEVICES.
6. THE 2001 CALIFORNIA ELECTRICAL CODE AND 2001 CACIFORNIA BUILDING CODE SHALL GOVERN THE ELECTRICAL WORK PERFORMED UNDER THIS CONTRACT.
7. THE FIRE ALARM SYSTEM SHALL CONFORM TO ARTICLE 760 OF THE CALIFORNIA ELECTRIC CODE.
8. UPON COMPLETION OF THE INSTALLATION OF THE FIRE ALARM SYSTEM, A SATISFACTORY TEST OF THE SYSTEM SHALL BE MADE IN THE PRESENCE OF DSA INSPECTOR AND LOCAL FIRE AUTHORITY.

FLOOR BOXES SEE SYMBOLS ABOVE

FR	WIREMOLD SAF 21/2 SERIES; 2 1/2" DEEP BOX
FS	1ST FLOOR: WIREMOLD WALKER RFB8 SERIES; POWER/DATA OR DATA ONLY
FS	2ND FLOOR: WIREMOLD WALKER RFB8SL SERIES; 4 1/2" DEEP, POWER/DATA OR DATA ONLY
FWR	CABLEFLOOR "POWERFLEX" SPLITTER JUNCTION BOX WITH 8-WIRE FURNITURE FEED MODULE
FWS	1ST FLOOR: WIREMOLD WALKER 889B SERIES WITH THREADED COVER PLATE FOR FURNITURE CONNECTION
FWS	2ND FLOOR: WIREMOLD WALKER RC9AFFGY SERIES WITH JUNCTION BOX BELOW, POKE THROUGH FURNITURE FEED UNIT

tBP
architecture
planning
interiors
management

LICENSED ARCHITECT ◇ VINCENT J. MARTINEZ ◇ No. C-9882 ◇ RENEWAL 08-31-05 ◇ STATE OF CALIFORNIA

tBP/Architecture
1000 Burnett Ave, Suite 140
Concord, CA 94520
ph: 9252466419 fx: 9252466495

architect

PROFESSIONAL ENGINEER ◇ No. 7650 ◇ ELECTRICAL ◇ REGISTERED ◇ STATE OF CALIFORNIA

CONSULTING ENGINEERS
252 Second Street, 3rd Floor
San Francisco, CA 94105
PH (415) 247-8700
FAX (415) 247-8711
twf-sf@pacbell.net

TOFT WOLFF FARROW Inc.

TWF #03007.00

consultant

APPROVED
DEPARTMENT OF THE ARMY
DIV. OF ENGINEERING & CONSTRUCTION
OFFICE OF REGULATION SERVICES
APPL NO. 105719
ELEC. SS
DATE 4-27-04

agency

SAN RAMON VALLEY CENTER
CONTRA COSTA COMMUNITY COLLEGE DISTRICT
SAN RAMON, CALIFORNIA

owner

tBP project number : 20212.00
file name: .
drawn by: ABC checked by:
date: 03-04-04 plot scale: 1:1

Rev:	date:	description:
1	05-26-04	DESIGN CLARIFICATIONS

drawing title: building no: .

NOTES, SYMBOLS & LIGHTING SCHEDULE

drawing no:

E0.01

drawing . of

SITE PLAN NOTES AND SYMBOLS

① ELECTRICAL PRIMARY METERING EQUIPMENT AND 21KV DISTRIBUTION EQUIPMENT
② PAD MOUNTED 21KV SWITCHGEAR
③ PAD MOUNTED TRANSFORMER
④ ELECTRICAL PRIMARY PULLBOX; 21KV
⑤ ELECTRICAL PULLBOX; 480V
⑥ COMMUNICATION MANHOLE

—·—C—·— COLLEGE COMMUNICATIONS UNDERGROUND DUCT BANK
—·—E—·— 480V ELECTRICAL UNDERGROUND DUCT BANK
—·—P—·— 21KV ELECTRICAL UNDERGROUND DUCT BANK

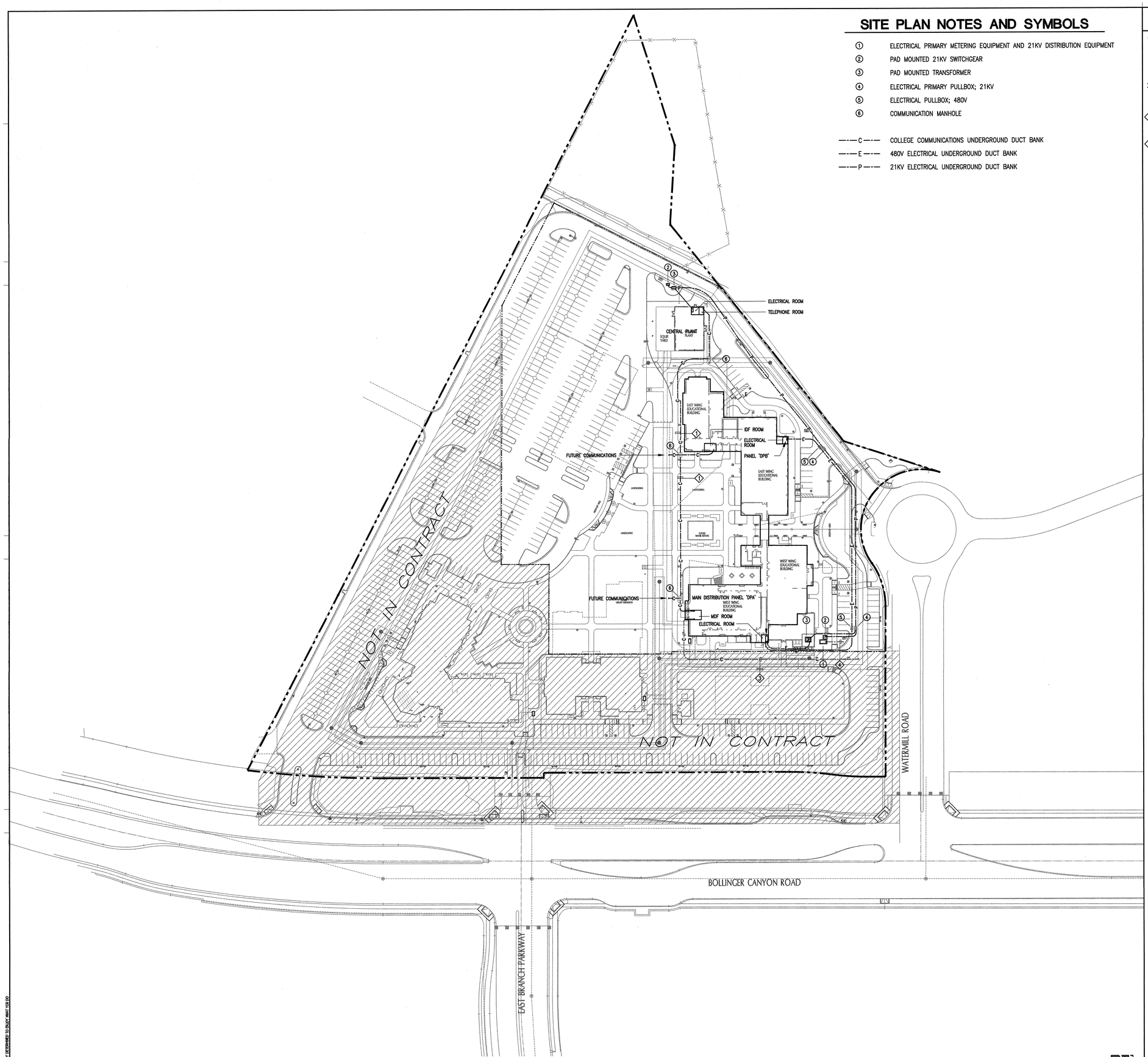

SHEET NOTES

1. THIS SITE PLAN IS FOR REFERENCE ONLY TO INDICATE THE OVERALL SCOPE OF THE WORK AND THE RELATIONSHIP OF THE ELECTRICAL SYSTEM COMPONENTS. FOR ADDITIONAL INFORMATION AND DETAILS ASSOCIATED WITH THE ELECTRICAL AND COMMUNICATION REFER TO THE ELECTRICAL SITE PLAN DRAWINGS E-1 THROUGH E-7.
2. FOR FIRE ALARM INTERCONNECTIONS BETWEEN BUILDINGS AND OTHER CONNECTIONS TO FIRE DETECTOR CHECK VALVES SEE DRAWING FA0.04 "FIRE ALARM SITE PLAN".

③ APPROXIMATE ROUTING OF INCOMING TELEPHONE, FIBER OPTIC AND CABLE TV, SEE JOINT TRENCH DRAWINGS.

④ APPROXIMATE ROUTING OF INCOMING PG&E 21KV ELECTRICAL SERVICE, SEE JOINT TRENCH DRAWINGS.

ELECTRICAL SITE PLAN
SCALE: 1" = 60'

1

tBP
architecture
planning
interiors
management
LICENSED ARCHITECT RENEWAL 8/31/2005 No. C-9855 STATE OF CALIFORNIA
tBP/architecture
1000 Burnett Ave, Suite 140
Concord, CA 94520
ph: 925.246.6449 fx: 925.246.6495
architect

PROFESSIONAL ENGINEER RENEWAL 8/31/2005 No. 17650 STATE OF CALIFORNIA
CONSULTING ENGINEERS
220 Second Street, 3rd Floor
San Francisco, CA 94105
TEL (415) 247-8700
FAX (415) 247-8711
twfsf@pacbell.net
TOFT WOLFF FARROW Inc.
TWF #03007.00
consultant

IDENTIFICATION STAMP
DIV. OF THE STATE ARCHITECT
OFFICE OF REGIONAL ADMINISTRATION
APPL NO. 1C0719
FILE NO.
DATE
agency

SAN RAMON VALLEY CENTER

CONTRA COSTA COMMUNITY COLLEGE DISTRICT

SAN RAMON, CALIFORNIA

owner

tBP project number : 20212.00
file name: .
drawn by: ABG checked by:
date: 03-09-04 plot scale: 1:1

Rev:	date:	description:
1	03-09-04	DSA BACKCHECK

drawing title: building no: .
ELECTRICAL SITE PLAN

drawing no:
E0.02
drawing . of

IF ORIGINALLY DESIGNED TO BE 24" X 36" 100%

160

CERTIFICATE OF COMPLIANCE (Part 1 of 3) LTG-1

PROJECT NAME: Contra Costa Community College Building 6 & 7		DATE: 9/4/2003
PROJECT ADDRESS: SAN RAMON VALLEY CENTER , SAN RAMON, CA		Building Permit #
PRINCIPAL DESIGNER-LIGHTING: TOFT WOLFF FARROW INC.	TELEPHONE: (415) 247-8700	Checked by/Date Enforcement Agency Use
DOCUMENTATION AUTHOR: TOFT WOLFF FARROW INC.	TELEPHONE: (415) 247-8700	

GENERAL INFORMATION

DATE OF PLANS: 9/4/2003	BUILDING CONDITION FLOOR AREA: 54200			CLIMATE ZONE			
BUILDING TYPE	[X] NONRESIDENTIAL	[ ] HIGH RISE RESIDENTIAL			[ ] HOTEL/MOTEL GUEST ROOM		
PHASE OF CONSTRUCTION	[X] NEW CONSTRUCTION	[ ] ADDITION	[ ] ALTERATION		[ ] UNCONDITIONED (FUT. ATTIC/ATT)		
METHOD OF ENVELOPE	[X] COMPLETE BLDG.	[ ] AREA CATEGORY	[ ] TAILORED		[ ] PERFORMANCE		

STATEMENT OF COMPLIANCE

This Certificate of Compliance lists the building features and performance specifications need to comply with Title 24, Parts 1 and 6 of the California Code of Regulations. This certificate applies only to building lighting requirements.

The documentation preparer hereby certifies that the documentation is accurate and complete.

DOCUMENTATION AUTHOR	SIGNATURE	DATE
Charles Wolff		9/4/2003

The Principal Lighting Designer hereby certifies that the proposed building design represented in this set of construction documents is consistent with the other compliance forms and worksheets, with the specifications, and with any other calculations submitted with this permit application. The proposed building has been designed to meet the envelope requirements contained in the applicable parts of Section 110, 119, 130 through 132, 146 and 149 of Title 24, Part 6.

Please check one:

[X] I hereby affirm that I am eligible under the provisions of Division 3 of the Business and Professions Code to sign this document as the person responsible for its preparation; and that I am licensed in the State of California as a Civil Engineer, Electrical Engineer, or I am a licensed architect.

[ ] I affirm that I am eligible under the provisions of Division 3 of the Business and Professions Code by section 5537.2 or 6737.3 to sign this document as the person responsible for its preparation; and that I am a licensed contractor performing this work.

[ ] I affirm that I am eligible under Division 3 of the Business and Professions Code to sign this document because it pertains to a structure or type of work described as exempt pursuant to Business and Professions Code Sections 5537, 5538 and 6737.1.

(Those sections of the Business and Professions Code are printed in full in the Nonresidential Manual.)

PRINCIPAL LIGHTING DESIGNER-NAME	SIGNATURE	LIC.#	DATE
Lawrence S. Wolff, P.E.		E-7650	9/30/2006

LIGHTING MANDATORY MEASURES

Indicate location on plans of Note Block for Mandatory Measures

INSTRUCTION TO APPLICANT

For detailed Instructions on the use of this and all Energy Efficiency Standards compliance forms, please refer to the Nonresidential Manual published by the California Energy Commission.

LTG-1: Required on plans for all submittals. Part 2 and 3 may be incorporated in schedules on plans.
LTG-2: Required for all submittals.
LTG-3: Optional. Use only if lighting control credits are taken.
LTG-4: Optional. Parts 2 and 3 and LTG-5 are optional if Tailored Method is used.

Nonresidential Compliance Form — January 2001

LIGHTING COMPLIANCE SUMMARY - PAGE #1 LTG-2

PROJECT NAME: Contra Costa Community College Building 6 & 7 — DATE: 9/4/2003

ACTUAL LIGHTING POWER

LUMINAIRE NAME	Type DESCRIPTION	NUMBER OF LUMINAIRES	WATTS PER LUMINAIRE (Including Ballast)	CEC DEFAULT Y	CEC DEFAULT N	TOTAL WATTS
A,A1	Recessed lensed 2X4 Fluor. 2L	60	62	x		3720
B,B1	Recessed Lensed 2X4 Fluor. 3L	64	93	x		5952
C,C1	Recessed Para. 2X4 Fluor. 2L	81	62	x		5022
D,D1	RecessedPara. 2x4 Fluor. 3L	288	93	x		24924
F,F1	Recessed Dnlt. Fluor. 1 L	67	32	x		2144
G,G1	Recessed Dnlt. Fluor. 1 L	25	38	x		950
H,H1	Wall Mtd. Fluor. 1L	18	32	x		576
I	Track Lighting 45w/ft	248	45	x		11160
J,K	Exterior Fixtures N/A for Calc			x		
L	Pendant Fluor. 9L	11	350	x		3850
M,M1	Recessed Fluor. 1L	26	32	x		832
N	Fluor. Surface 1 lamp	6	32	x		192
	Recessed Fluor. 1L Shower	2	18	x		36
P,P1	Suspended Fluor. 2L	56	32	x		1792

SUBTOTAL FROM THIS PAGE	61150
PLUS SUBTOTAL FROM CONTINUATION PAGE #2	4284
PORTABLE LIGHTING (From LTG-1 Part 3 of 3)	740
LESS CONTROL CREDIT WATTS (From LTG-3)	
ADJUSTED ACTUAL WATTS	66174

ALLOWED LIGHTING POWER (Choose One Method)

COMPLETE BUILDING METHOD

BUILDING CATEGORY (From 146(b) Table 1-M)	WATTS PER SF	COMPLETE BLDG. AREA	ALLOWED WATTS
SCHOOL	1.4	54200	75880

AREA CATEGORY METHOD

AREA CATEGORY (From 146(b) Table 1-N)	WATTS PER SF	AREA (SF)	ALLOWED WATTS
TOTALS		0 AREA	0 WATTS

TAILORED METHOD

TOTAL ALLOWED WATTS (From LTG-4)

Nonresidential Compliance Form — January 2001

LIGHTING COMPLIANCE SUMMARY LTG-2

PROJECT NAME: Building 6&7 — DATE: 8/28/2003

ACTUAL LIGHTING POWER

LUMINAIRE NAME	Type DESCRIPTION	NUMBER OF LUMINAIRES	WATTS PER LUMINAIRE (Including Ballast)	CEC DEFAULT Y	CEC DEFAULT N	TOTAL WATTS
Q	Linear Pendant Uplight Flour 2L/4'		62	x		
R,R1	Suspended Fluor. 2L		62	x		
S	Recessed Para 2x2 Fluor. 3l		53	x		
T	Wall Sconce Fluor 1L		18	x		
U						
V						

SUBTOTAL FROM THIS PAGE	0
PLUS SUBTOTAL FROM CONTINUATION PAGE	
PORTABLE LIGHTING (From LTG-1 Part 3 of 3)	0
LESS CONTROL CREDIT WATTS (From LTG-3)	
ADJUSTED ACTUAL WATTS	0

ALLOWED LIGHTING POWER (Choose One Method)

COMPLETE BUILDING METHOD

BUILDING CATEGORY (From 146(b) Table 1-M)	WATTS PER SF	COMPLETE BLDG. AREA	ALLOWED WATTS
SCHOOL	1.4	68000	95200

AREA CATEGORY METHOD

AREA CATEGORY (From 146(b) Table 1-N)	WATTS PER SF	AREA (SF)	ALLOWED WATTS
TOTALS		0 AREA	0 WATTS

TAILORED METHOD

TOTAL ALLOWED WATTS (From LTG-4)

Nonresidential Compliance Form — January 2001

CERTIFICATE OF COMPLIANCE- PAGE #1 (PART 2 of 3) LTG-1

PROJECT NAME: Contra Costa Community College Building 6 & 7 — Date: 9/4/2003

INSTALLED LIGHTING SCHEDULE

Name	LUMINAIRE DESCRIPTION	LAMPS Type DESCRIPTION	LAMPS No. Of Lamps	LAMPS Watts Per Lamp	BALLASTS Type DESCRIPTION	BALLASTS No. Of Ballast	Luminaire No. Of Watts/ Lumin.	Luminaire Lumin.	TOTAL WATTS
A,A1	Recessed lensed 2X4 Fluor. 2L	Flour 32w T8	2	32	electronic	1	60	62	3720
B,B1	Recessed Lensed 2X4 Fluor. 3L	Flour 32w T8	3	32	electronic	1	64	93	5952
C,C1	Recessed Para. 2X4 Fluor. 2L	Flour 32w T8	2	32	electronic	1	81	62	5022
D,D1	RecessedPara. 2x4 Fluor. 3L	Flour 32w T8	3	32	electronic	1	268	93	24924
F,F1	Recessed Dnlt. Fluor. 1 L	Flour 32w tt	1	32	electronic	1	67	32	2144
G,G1	Recessed Dnlt. Fluor. 1 L	Fluor 18w tt	2	18	electronic	1	25	38	950
H,H1	Wall Mtd. Fluor. 1L	Fluor 32w T8	1	32	electronic	1	18	32	576
I	Track Lighting 45w/ft	Incand		75	none	0	248	45	11160
J,K	Exterior Fixtures N/A for Calc	Fluor.			electronic				0
L	Pendant Fluor. 9L	Fluor 42w tt	9	42	electronic	5	11	350	3850
M,M1	Recessed Fluor. 1L	Fluor 32w T8	1	32	electronic	1	26	32	832
N	Fluor. Surface 1 lamp	Fluor 32w T8	1	32	electronic	1	6	32	192
O	Recessed Fluor. 1L Shower	Fluor 18w CFL	1	18	electronic	1	2	18	36
P,P1	Suspended Fluor. 2L	Fluor 32w T8	1	18	electronic	1	56	32	1792

SUBTOTAL FROM THIS PAGE	61150
PLUS SUBTOTAL FROM CONTINUATION PAGE #2	4284
PORTABLE LIGHTING (From LTG-1 Part 3 of 3)	740
LESS CONTROL CREDIT WATTS (From LTG-3)	
ADJUSTED ACTUAL WATTS	66174

Efficacy and Control Requirement of 130(c)
Control Requirements of 131(f)

MANDATORY AUTOMATIC CONTROLS

CONTROL LOCATION (From #)	CONTROL IDENTIFICATION	CONTROL TYPE (Auto Time Switch, Exterior, etc.)	SPACE CONTROLLED	NOTE TO FIELD
Classrooms – ceiling	OS	Occupancy Sensor w/ over-ride	Classrooms	
Office Areas– ceiling/wall	OS	Occupancy Sensor w/ over-ride	Offices	
Stor. & Misc Spaces – ceiling/wall	OS	Occupancy Sensor w/ over-ride	Stor/ Misc Sp.	
Exterior Lighting – Ceiling or wall photocontrol	PC, TIME CL.	Photocell /time clock	Exterior	

CONTROLS FOR CREDIT

CONTROL LOCATION (From # or Dwg. #)	CONTROL IDENTIFICATION	CONTROL TYPE (Occupant, Daylight, Dimming, etc.)	LUMINAIRES CONTROLLED TYPE	LUMINAIRES CONTROLLED # OF LUMIN.	NOTE TO FIELD

NOTES TO FIELD – For Building Department Use Only

Nonresidential Compliance Form — January 2001

CERTIFICATE OF COMPLIANCE - PAGE #2 (PART 2 of 3) LTG-1

PROJECT NAME: Contra Costa Community College Building 6 & 7 — Date: 9/4/2003

INSTALLED LIGHTING SCHEDULE

Name	LUMINAIRE DESCRIPTION	LAMPS Type DESCRIPTION	LAMPS No. Of Lamps	LAMPS Watts Per Lamp	BALLASTS Type DESCRIPTION	BALLASTS No. Of Ballast	Luminaire No. Of Watts/ Lumin.	Luminaire Lumin.	TOTAL WATTS
Q	Linear Pendant Uplight Flour 2L/4'	Flour 32w T8	2	32	electronic	1	18	62	992
R,R1	Suspended Fluor. 2L	Flour 32w T8	2	32	electronic	1	40	62	2480
S	Recessed Para 2x2 Fluor. 3l	Flour 17w T8	2	17	electronic	1	4	53	212
T	Wall Sconce Fluor 1L	Flour 18w CFl	1	18	electronic	1	4	26	104
U	Fluor Tube light 8' long	Fluor 32w T8	4	32	electronic	2	4	124	496
V	Exterior Floodlight N/A for calc.								0
									0
									0
									0
									0
									0
									0
									0

SUBTOTAL FROM THIS PAGE	4284
PLUS SUBTOTAL FROM CONTINUATION PAGE	
PORTABLE LIGHTING (From LTG-1 Part 3 of 3)	0
LESS CONTROL CREDIT WATTS (From LTG-3)	
ADJUSTED ACTUAL WATTS	

Efficacy and Control Requirement of 130(c)
Control Requirements of 131(f)

MANDATORY AUTOMATIC CONTROLS

CONTROL LOCATION (From #)	CONTROL IDENTIFICATION	CONTROL TYPE (Auto Time Switch, Exterior, etc.)	SPACE CONTROLLED	NOTE TO FIELD

CONTROLS FOR CREDIT

CONTROL LOCATION (From # or Dwg. #)	CONTROL IDENTIFICATION	CONTROL TYPE (Occupant, Daylight, Dimming, etc.)	LUMINAIRES CONTROLLED TYPE	LUMINAIRES CONTROLLED # OF LUMIN.	NOTE TO FIELD

NOTES TO FIELD – For Building Department Use Only

Nonresidential Compliance Form — January 2001

PORTABLE LIGHTING WORKSHEET (Part 3 of 3) LTG-1

PROJECT NAME: Contra Costa Community College Building 6 & 7 — DATE: 9/4/2003

TABLE 1A – PORTABLE LIGHTING NOT SHOWN ON PLANS FOR OFFICE AREA > 250 SQUARE FEET

A ROOM# OR ZONE ID	B DEFAULT	C AREA (SF)	D TOTAL WATTS (B X C)
Open Areas 1 First Floor Office	0.2	2200	440
Open Areas 2 First floor Office	0.2	1500	300
Open Areas Second Floor	0.2	0	0
	0.2		0
	0.2		0
	0.2		0
		3700	740

TABLE 1B – PORTABLE LIGHTING SHOWN ON PLANS FOR OFFICE AREA > 250 SQUARE FEET

A ROOM# OR ZONE ID	B PORTABLE LIGHTING DESCRIPTION(S) PER TASK AREA	C LUMINAIRE(S) WATTS PER TASK AREA	D TASK AREA (SF)	E NUMBER OF TASK AREAS	F TOTAL AREA (SF) (D x E)	G TOTAL WATTS (C X E)
					0	0
					0	0
					0	0
					0	0
					0	0
					0	0
					0	0
				TOTAL	0	0

TABLE 1C – PLANS SHOW PORTABLE LIGHTING IS NOT REQUIRED FOR OFFICE AREA > 250 SQUARE FEET

ROOM# OR ZONE ID	TOTAL AREA (SF)
TOTAL	0

Designer needs to provide detailed documentation that the lighting level provided by the overhead lighting meets the needs of the space. The details include luminaire types, CU, and mounting locations relative to work areas.

BUILDING SUMMARY – PORTABLE LIGHTING

BUILDING SUMMARY	TOTAL AREA (SF) (FROM TABLES 1A+1B+1C)	TOTAL WATTS (FROM TABLES 1A+1B)
BUILDING TOTAL	3700	740

Enter on LTG-1 and 2: Portable Lighting

Nonresidential Compliance Form — January 2001

NOTE BLOCK FOR MANDATORY MEASURES

Building Lighting Shut-Off
The building lighting shut-off system consists of an automatic time switch, with a zone for each floor. Occupancy sensors shall be used for all classrooms, office areas, stor. Rooms and misc. spaces in lieu of time clock control.

Override for Building Lighting Shut-off
The automatic building shut-off system is provided with a manual, accessible override switch in sight of the lights. The area of override does not exceed 5,000 square feet for controlled Lighting. All rooms with occupancy sensors are provided with a manual override.

Automatic Control Devices Certified
All automatic control devices specified are certified, all alternate equipment shall be certified and installed as directed by the manufacturer.

Fluorescent Ballast and Luminaries Certified
All fluorescent fixtures specified for the project are certified and listed in the Directory, All installed fixtures shall be certified.

Tandem Wiring for Two-Lamp Ballasts
All one or three lamp fluorescent fixtures are specified with electronic high-frequency ballasts and are exempt from tandem wiring requirements.

Individual Room/Area Controls
Each room and area in the building is equipped with a separate switch or occupancy sensor device for each area with floor-to-ceiling walls.

Uniform Reduction for Individual Rooms
Each room or enclosed space 100 square feet or larger in which the connected lighting load exceeds 0.8 watts per square foot for the space as a whole, and that has more than one lighting fixture, is controlled with bi-level switching or dimmer switches for reduction lighting levels in the areas

Day Lit Area Control
All rooms with window and skylights, that are greater than 250 square feet, and that allow for the effective use of daylight in the area have 50% of the lamps in each day lit area controlled by a separate switch or by dimmer switches.

Control of Exterior Lights
Exterior mounted fixtures which are served from the electrical panel inside the building are controlled by a directional photo cell control and time switch control.

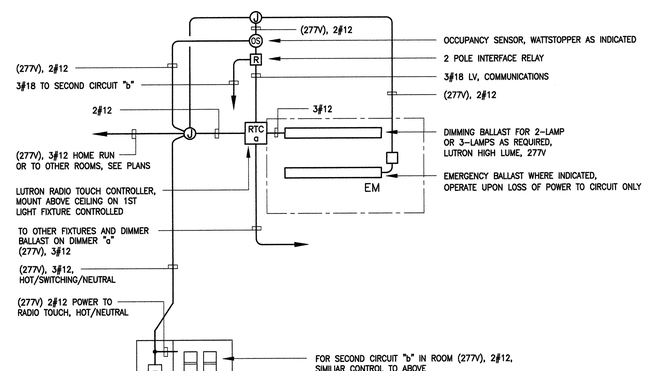

A 0.03 TYPICAL CLASSROOM LIGHTING CONTROL DETAIL

NOT TO SCALE

NOTES AND OPERATION

1. OCCUPANCY SENSOR CONTROLS (2) CIRCUITS PER ROOM.
2. DIMMERS FOR (2) CIRCUITS; LUTRON RADIO TOUCH.
3. EMERGENCY FEATURE FOR A MINIMUM OF (2) FIXTURES PER ROOM. WIRE AHEAD OF OTHER LIGHT CONTROL. OPERATES ONLY UPON LOSS OF POWER TO LIGHTING CIRCUIT, NOT WITH SWITCH/DIMMER/OCCUPANCY SENSOR CONTROL.
4. OVERIDE FOR OCCUPANCY SENSOR WILL TURN ON ALL LIGHTS TO DIMMER PRESET SETTINGS.
5. FOR SURFACE OR PENDANT LIGHTS, LOCATE RTC ABOVE CEILING NEAR OUTLET BOX SERVING FIXTURE.
6. OFFICE AREA SIMILAR EXCEPT NO DIMMING. OVERIDE SWITCHES TO BE 1 POLE OR 3-WAY AS INDICATED.

tBP architecture planning interiors management
tBP/architecture
1000 Burnett Ave, Suite 140
Concord, CA 94520
ph: 9252466419 fx: 9252466495
architect

CONSULTING ENGINEERS
2600 Tenderfoot Way, Suite 100
San Rafael, CA 94901
(415) 247-8700
FAX (415) 247-8711
twfsf@pacbell.net
TWF #03007.00
TOFT WOLFF FARROW Inc.
consultant

IDENTIFICATION STAMP
DEPT. OF RESIDENTIAL ARCHITECTS
APPL. NO. 109754
BY: [illegible]
DATE: 3/29/06

agency

SAN RAMON VALLEY CENTER
CONTRA COSTA COMMUNITY COLLEGE DISTRICT
SAN RAMON, CALIFORNIA

owner

tBP project number : 20212.00
file name: .
drawn by: ABC checked by:
date: 03-09-04 plot scale: 1:1

Rev:	date:	description:
1	03-09-04	DSA BACKCHECK

drawing title: LIGHTING TITLE 24 CALCULATIONS, DETAILS
building no: .
drawing no: E0.03
drawing . of

DO NOT USE THIS DRAWING IF ABSOLUTELY DESIGNED TO FACILITY MANAGER

SHEET NOTES

1. SNAKETRAY ABOVE CEILING, SINGLE RUN FOR COMMUNICATIONS CABLES.
2. SNAKETRAY ABOVE CEILING, DOUBLE RUN FOR COMMUNICATIONS CABLES.
3. PROVIDE FLEX CONNECTIONS ACROSS SEISMIC JOINT.
4. COMMUNICATIONS CONDUITS ABOVE CEILING, TERMINATE IN IDF ROOM.
5. FOR ALL FLOOR BOXES FOR ELECTRICAL/COMMUNICATIONS, COORDINATE EXACT LOCATION WITH FURNITURE LAYOUT. PROVIDE A MAXIMUM OF (2) DUPLEX RECEPTACLES EACH BOX UNLESS NOTED.
6. FUSED DISCONNECT SWITCH AND SHUNT TRIP CIRCUIT BREAKER FOR ELEVATOR. LOCATE PER ELEVATOR CONTRACTORS SHOP DRAWINGS. SHUNT TRIP TO OPERATE LOCALLY OR UPON SIGNAL FROM HEAT DETECTOR IN ELEVATOR MACHINE ROOM.
7. WALL DUCT RUN FROM BELOW RAISED FLOOR TO ABOVE CEILING IN ROOM 107 FOR COMMUNICATIONS CABLING. COORDINATE WITH IT DRAWINGS.
8. JUNCTION BOXES AND RACEWAY FOR PROJECTOR CONTROL.
9. CONNECT TO STARLINE PLUG IN BUS DUCT; SEE COMMUNICATIONS DRAWINGS FOR SPECIFICATIONS AND DETAILS.
10. JUNCTION BOX FOR FIRE ALARM SMOKE DAMPERS. SEE FIRE ALARM DRAWINGS. POWER CIRCUIT; RUN 3#12 = 1#12G HOME RUN.
11. JUNCTION BOXES FOR AUTOMATIC DOOR CONTROLLERS FOR EGRESS. 120 VOLT – CONNECT TO DOOR OPERATOR, CONTROL STATION AND SENSOR DEVICE PER UNIT MANUFACTURERS SHOP DRAWINGS AND APPROVED SHOP DRAWINGS. SEE ALSO ARCHITECTURAL DRAWINGS.
12. JUNCTION BOXES FOR STACK LIGHTING; STUB AT BASE OF STACK. COORDINATE STUB UP LOCATION WITH STACK MFGR. 120 VOLT CONN. SEE LIGHTING FLOOR PLAN FOR ADDITIONAL INFORMATION.
13. GROUNDING BAR 1/4" x 4" x 18" LONG; RUN #2 COPPER MIN. FROM TO UFER GROUND AT IN ELECTR. ROOM. COORDINATE LOCATIONS WITH EQUIPMENT INSTALLER PRIOR TO PLACEMENT.
14. 20A HP RATED TOGGLE TYPE DISCONNECT SWITCH.
15. 3/4"C, 2#12, 1#12G; PROVIDE 30A, 2P NON-FUSED NEMA 3R DISCONNECT SWITCH.
16. FLUSH FLOOR BOX IN RAISED FLOOR WITH CONNECTION FOR 8-WIRE FURNITURE WHIP.
17. 120V CONNECTION AND FLOOR BOXES FOR SECURITY ALARM. RUN CONDUIT BELOW FLOOR. INTERCONNECTION OF UNITS PER MANUFACTURERS SHOP DRAWINGS.
18. FOR EXACT LOCATION AND MOUNTING HEIGHTS OF ALL COMMUNICATIONS OUTLETS, SEE TELE/COMMUNICATIONS DRAWINGS.
19. 8" x 8" FLUSH JUNCTION BOX IN WALL WITH GROMMETED OPENING. RUN (2) 2" CONDUIT TO ABOVE HUNG CEILING.
20. RECEPTACLES FOR AUTOMATIC VALVE TRANSFORMERS. LOCATE ABOVE CEILING OR WHERE DIRECTED. COORDINATE WITH PLUMBING CONTRACTOR.
21. 1" COMMUNICATIONS CONDUIT, STUB TO ABOVE HUNG CEILING.
22. (2) JUNCTION BOXES ABOVE CEILING FOR PROJECTOR AND AV CONTROL. SEE AV DRAWINGS.

KEY PLAN

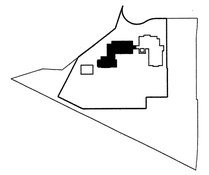

tBP
architecture
planning
interiors
management

tBP/architecture
1000 Burnett Ave, Suite 140
Concord, CA 94520
ph: 925.246.6419 fx: 925.246.6495

architect

CONSULTING ENGINEERS
TOFT WOLFF FARROW Inc.
2800 Bridgeway, Suite 200
San Francisco, CA 94123
ph: (415) 921-7695
FAX: (415) 247-8711
twfsf@pacbell.net

consultant

TWF #03007.00

APPROVED
IDENTIFICATION STAMP
DIVISION OF THE STATE ARCHITECT
APPL ID: 1-046468
AC
DATE

agency

SAN RAMON VALLEY CENTER

CONTRA COSTA COMMUNITY COLLEGE DISTRICT

SAN RAMON, CALIFORNIA

owner

tBP project number : 20212.00
file name: .
drawn by: ABC checked by:
date: 03-09-04 plot scale: 1:1

Rev:	date:	description:
1	05-26-04	DESIGN CLARIFICATIONS

drawing title: building no: .

FIRST FLOOR - WEST
POWER/SIGNAL PLAN

drawing no:

E2.11

drawing . of

FIRST FLOOR POWER/SIGNAL PLAN - WEST
SCALE: 1/8" = 1'-0"

1

north

0 2' 4' 8' 16'

IF NOT ACCURATELY DETERMINED TO BE AN 11X17 SCALE

SHEET NOTES

1. SNAKETRAY ABOVE CEILING, SINGLE RUN FOR COMMUNICATIONS CABLES.
2. SNAKETRAY ABOVE CEILING, DOUBLE RUN FOR COMMUNICATIONS CABLES.
3. "NOTE NOT USED"
4. COMMUNICATIONS CONDUITS ABOVE CEILING, TERMINATE IN IDF ROOM.
5. FLOOR BOXES FOR ELECTRICAL/COMMUNICATIONS. COORDINATE EXACT LOCATION WITH FURNITURE LAYOUT. PROVIDE A MAXIMUM OF (4) DUPLEX RECEPTACLES EACH BOX. RUN CIRCUITS BELOW SLAB UNLESS NOTED.
6. FUSED DISCONNECT SWITCH AND SHUNT TRIP CIRCUIT BREAKER FOR ELEVATOR. LOCATE PER ELEVATOR CONTRACTORS SHOP DRAWINGS. SHUNT TRIP TO OPERATE LOCALLY OR UPON SIGNAL FROM HEAT DETECTOR IN ELEVATOR MACHINE ROOM.
7. WALL DUCT RUN FROM BELOW RAISED FLOOR TO ABOVE CEILING FOR COMMUNICATIONS CABLING. COORDINATE WITH IT DRAWINGS.
8. (2) JUNCTION BOXES ABOVE CEILING FOR PROJECTOR AND AV CONTROL. SEE AV DRAWINGS.
9. CONNECT TO STARLINE PLUG IN BUS DUCT; SEE COMMUNICATIONS DRAWINGS FOR SPECIFICATIONS AND DETAILS.
10. 3/4"C, 3#12 + 1#12G
11. 3/4"C, 3#10 + 1#10G
12. 3/4"C, 2#12 + 1#12G; PROVIDE 30A, 2P, NON-FUSED, NEMA 3R DISCONNECT SWITCH
13. 20A HP RATED TOGGLE TYPE DISCONNECT SWITCH
14. ELEVATOR PIT LIGHT, SWITCH AND GROUND FAULT RECEPTACLE
15. JUNCTION BOX AND CONNECTION TO ELEVATOR SUMP PUMP. SEE MECHANICAL DRAWINGS FOR WIRING REQUIREMENTS.
16. HOT WATER CIRCULATION PUMPS; 1/25HP EACH. PROVIDE FRACTIONAL HP MOTOR STARTER WITH O/L PROTECTION. CONNECT TO AQUASTAT AND TIMER. SEE PLUMBING DRAWINGS.
17. 1 1/2"C, 3#2 + 1#6G
18. 3/4"C, 3#10 + 1#10G
19. 1 1/4"C, 4#4 + 1#8G
20. JUNCTION BOX FOR FIRE SMOKE DAMPER. SEE FIRE ALARM DRAWINGS. RUN 3#12 + 1#12G HOME RUN.
21. GROUNDING BAR 1/4" X 4' x 20" LONG – RUN #2 COPPER MIN. FROM TO UFER GROUND AT IN ELECTR. ROOM. COORDINATE LOCATIONS WITH EQUIPMENT INSTALLER PRIOR TO PLACEMENT.
22. PROVIDE GROUNDING CONNECTIONS FOR INCOMING TELEPHONE AND TV SERVICES IN ACCORDANCE WITH CODE AND PER THE REPECTIVE UTILITY COMPANY STANDARDS AND REQUIREMENTS.
23. 1"C, 6#10, 2#10G.
24. RECEPTACLES FOR AUTOMATIC VALVE TRANSFORMERS; LOCATE ABOVE CEILING OR WHERE DIRECTED, COORDINATE WITH PLUMBING CONTRACTOR.
25. JUNCTION BOX; 6" x 6" x 2 1/2" DEEP MINIMUM WITH GROMMETED PLATE AND (2) 1 1/4"C WITH PULL WIRE. RUN TO ABOVE HUNG CEILING FOR AUDIO VISUAL CABLING. CABLING BY OTHERS.
26. EXACT LOCATION OF DEVICES SHALL BE DETERMINED BY EQUIPMENT SUPPLIER. FINAL WIRING TO ALL EQUIPMENT SHALL BE DONE AS DESIGN BUILD BY POOL EQUIPMENT SUPPLIER. ALL OUTLET BOXES IN POOL ROOM SHALL BE FS CAST TYPE, WITH GASKETED COVER PLATES.

KEY PLAN

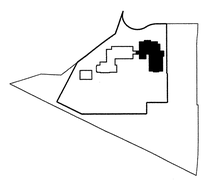

FIRST FLOOR POWER/SIGNAL PLAN - EAST
SCALE: 1/8" = 1'-0"

1

tBP architecture planning interiors management

tBP/Architecture
1000 Burnett Ave, Suite 140
Concord, CA 94520
ph: 925.246.6419 fx: 925.246.6495

architect

CONSULTING ENGINEERS
292 Second Street, Ste 105
San Francisco, CA 94105
TEL (415) 247-8700
FAX (415) 247-8701
twfsf@pacbell.net

TOFT WULFF FARROW Inc.

consultant

TWF #03007.00

APPROVED IDENTIFICATION STAMP DIVISION OF THE STATE ARCHITECT
APPL 01 10602
ACCT FLS SS
DATE 6-9-04

agency

SAN RAMON VALLEY CENTER

CONTRA COSTA COMMUNITY COLLEGE DISTRICT

SAN RAMON, CALIFORNIA

owner

tBP project number : 2021.2.00
file name: .
drawn by: ABC checked by:
date: 03-09-04 plot scale: 1:1

Rev:	date:	description:
1	05-26-04	DESIGN CLARIFICATIONS

drawing title: FIRST FLOOR - EAST POWER/SIGNAL PLAN
building no: .
drawing no: E2.12
drawing . of

IF ABSOLUTELY DETERMINED TO ENLIST WHAT YOU DO

163

SHEET NOTES

1. SNAKETRAY ABOVE CEILING, SINGLE RUN FOR COMMUNICATIONS CABLES.
2. SNAKETRAY ABOVE CEILING, DOUBLE RUN FOR COMMUNICATIONS CABLES.
3. PROVIDE FLEXIBLE CONDUIT WHERE CROSSING SEISMIC JOINT.
4. COMMUNICATIONS CONDUITS ABOVE CEILING, TERMINATE IN IDF ROOM.
5. FLOOR BOXES FOR ELECTRICAL/COMMUNICATIONS. COORDINATE EXACT LOCATION WITH FURNITURE LAYOUT. PROVIDE A MAXIMUM OF (2) DUPLEX RECEPTACLES EACH BOX. RUN CIRCUITS BELOW SLAB UNLESS NOTED.
6. "NOTE NOT USED"
7. WALL DUCT RUN FROM BELOW RAISED FLOOR TO ABOVE CEILING IN ROOM FOR COMMUNICATIONS CABLING. COORDINATE WITH IT DRAWINGS.
8. (2) JUNCTION BOXES ABOVE CEILING FOR PROJECTOR AND AV CONTROL. SEE AV DRAWINGS.
9. CONNECT TO STARLINE PLUG IN BUS DUCT; SEE COMMUNICATIONS DRAWINGS FOR SPECIFICATIONS AND DETAILS.
10. 20A HP RATED TOGGLE TYPE DISCONNECT SWITCH.
11. JUNCTION BOX FOR FIRE SMOKE DAMPERS. SEE FIRE ALARM DRAWINGS.
12. JUNCTION BOX; 6" x 6" x 2 1/2" DEEP MAXIMUM, WITH GROMMETED PLATE AND (2) 1 1/4" C WITH PULL WIRE. RUN TO ABOVE HUNG CEILING FOR AUDIO VISUAL CABLING. CABLING BY OTHERS.
13. JUNCTION BOX FOR SCREEN CONTROL, ABOVE CEILING. CONNECT TO WALL MOUNTED UP/DOWN SWITCH. COORDINATE LOCATIONS WITH EQUIPMENT INSTALLER.
14. RECEPTACLES FOR AUTOMATIC VALVE TRANSFORMERS. LOCATE ABOVE CEILING WHERE DIRECTED. COORDINATE WITH PLUMBING CONTRACTOR.

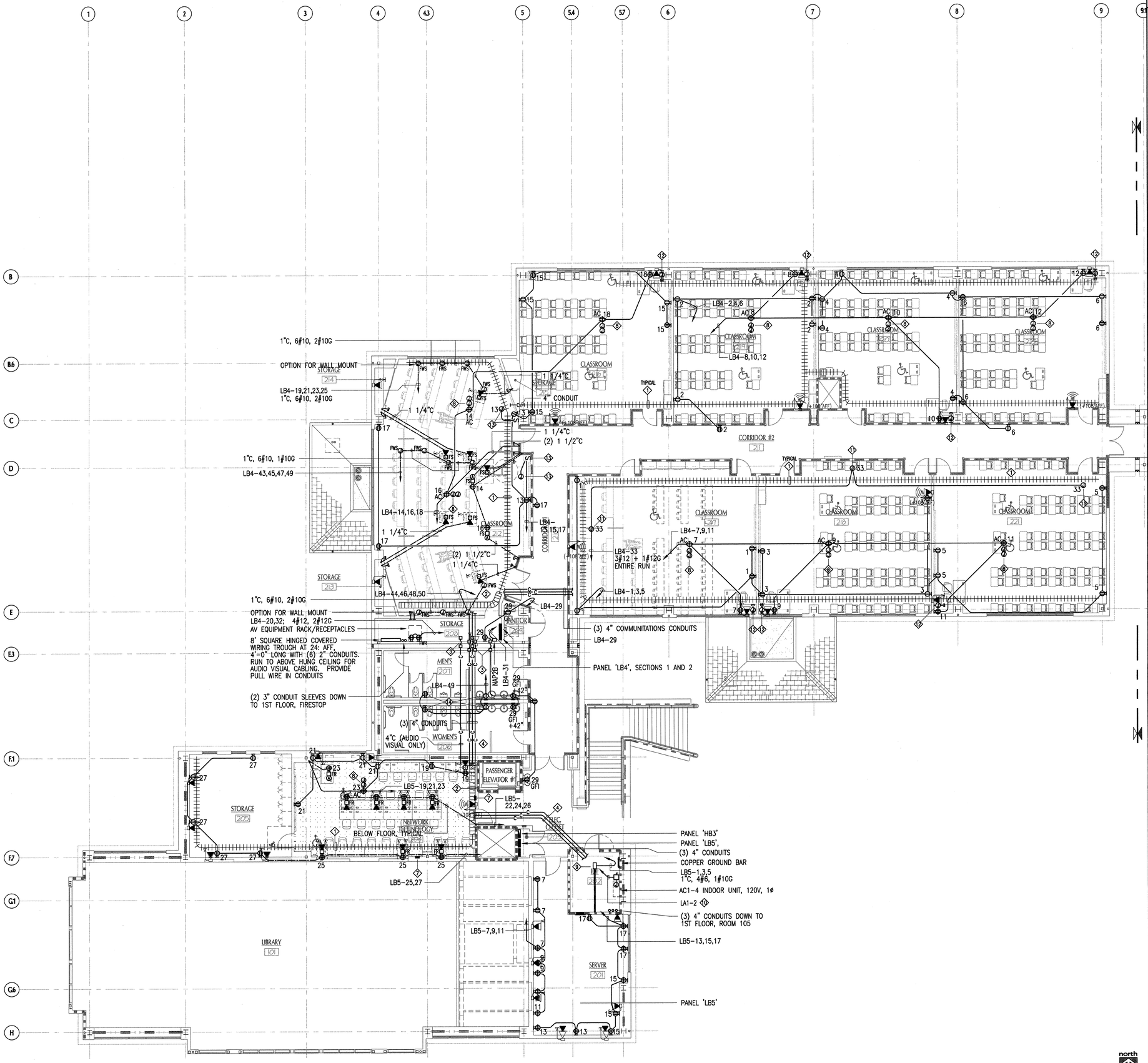

SECOND FLOOR POWER/SIGNAL PLAN - WEST | 1

SCALE: 1/8" = 1'-0"

KEY PLAN

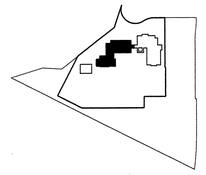

tBP
architecture
planning
interiors
management

tBP/Architecture
1000 Burnett Ave, Suite 140
Concord, CA 94520
ph: 9252466419 fx: 9252466495

architect

CONSULTING ENGINEERS
TOFT WOLFF FARROW Inc.
2850 Spafford Street
San Francisco, Ca. 94123
(415) 921-7705
FAX (415) 247-8711
twfsf@pacbell.net

TWF #03007.00

consultant

APPROVED
DSA, REPRESENTATIVE STAMP
STATE OF CALIFORNIA
OFFICE OF REGULATION SERVICES
APPL NO. 105719
ARCHITECT
DATE 5-26-04

agency

owner

SAN RAMON VALLEY CENTER

CONTRA COSTA COMMUNITY COLLEGE DISTRICT

SAN RAMON, CALIFORNIA

tBP project number : 20212.00
file name: .
drawn by: ABC checked by:
date: 03-09-04 plot scale: 1:1

Rev:	date:	description:
1	05-26-04	DESIGN CLARIFICATIONS

drawing title: SECOND FLOOR - WEST POWER/SIGNAL PLAN
building no: .
drawing no: E2.21
drawing . of

THE ACOUSTICAL DESIGNED TO MEET MIN. STC 50

SHEET NOTES

1. SNAKETRAY ABOVE CEILING, SINGLE RUN FOR COMMUNICATIONS CABLES.
2. SNAKETRAY ABOVE CEILING, DOUBLE RUN FOR COMMUNICATIONS CABLES.
3. 1"C, 6#10, 2#10G; FURNITURE WHIP CONNECTION.
4. COMMUNICATIONS CONDUITS ABOVE CEILING, TERMINATE IN IDF ROOM.
5. FLOOR BOXES FOR ELECTRICAL/COMMUNICATIONS. COORDINATE EXACT LOCATION WITH FURNITURE LAYOUT. PROVIDE A MAXIMUM OF (4) DUPLEX RECEPTACLES EACH BOX. RUN CIRCUITS BELOW SLAB UNLESS NOTED.
6. "NOTE NOT USED"
7. WALL DUCT RUN FROM BELOW RAISED FLOOR TO ABOVE CEILING IN ROOM FOR COMMUNICATIONS CABLING. COORDINATE WITH IT DRAWINGS.
8. (2) JUNCTION BOXES ABOVE CEILING FOR PROJECTOR AND AUDIO/VISUAL CONTROL. SEE AV DRAWINGS.
9. CONNECT TO STARLINE PLUG IN BUS DUCT; SEE COMMUNICATIONS DRAWINGS FOR SPECIFICATIONS AND DETAILS.
10. GROUNDING BAR 1/4" X 4' x 20" LONG – RUN #2 COPPER MIN. FROM TO UFER GROUND AT IN ELECTR. ROOM. COORDINATE LOCATIONS WITH EQUIPMENT INSTALLER PRIOR TO PLACEMENT.
11. 20A HP RATED TOGGLE TYPE DISCONNECT SWITCH.
12. JUNCTION BOX; 6"x6"x1 1/2" DEEP MAXIMUM, WITH GROMMETED PLATE AND (2) 1 1/4" C WITH PULL WIRE. RUN TO ABOVE HUNG CEILING FOR AUDIO VISUAL CABLING. CABLING BY OTHERS.
13. JUNCTION BOX FOR HVAC CONTROL; COORDINATE CONNECTIONS WITH MECHANICAL.
14. (2) 1 1/4"C BELOW FLOOR; RUN UP TO ABOVE HUNG CEILING FOR AUDIO VISUAL.
15. (2) 4"C DOWN TO 1ST FLOOR, SEE E2.12.

AC1–4 INDOOR UNIT, 120V, 1ø
PANEL 'LA4' (2 SECTION PANEL)
COPPER GROUND BAR 10
LA4–35 1
LA4–24,26,28 1"C. 4#6 + 1#10 G.
PANEL 'PPC' (LAB PANEL)
LA4–25
TRANSFORMER 'C', 75KVA
PANEL 'HA4'
PANEL 'HA2'
LA4–29
NAP2A
LAB PANELS SEE LAB FURNITURE DRAWINGS
COMMUNICATIONS OUTLET FROM ABOVE, TYPICAL, SEE COMMUNICATIONS DRAWINGS

KEY PLAN

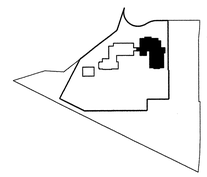

tBP/Architecture
1000 Burnett Ave, Suite 140
Concord, CA 94520
ph. 9252466419 fx. 9252466495
architect

CONSULTING ENGINEERS
1922 Second Street, Old Town
San Rafael, CA 94901
TEL (415) 257-8700
FAX (415) 257-8701
twfsf@pacbell.net
TOFT WOLFF FARROW Inc.
TWF #03007.00
consultant

APPROVED
DEPARTMENT OF STATE ARCHITECT
DIV. OF REGULATION SERVICES
APP. NO. 10719
DSA 1 IS 6-7-04
DATE

agency

SAN RAMON VALLEY CENTER
CONTRA COSTA COMMUNITY COLLEGE DISTRICT
SAN RAMON, CALIFORNIA
owner

tBP project number : 20212.00
file name: .
drawn by: ABC checked by:
date: 03-04-04 plot scale: 1:1

Rev:	date:	description:
1	05-26-04	DESIGN CLARIFICATIONS

drawing title: building no.: .
SECOND FLOOR - EAST POWER/SIGNAL PLAN
drawing no.:
E2.22
drawing . of

14 SECOND FLOOR POWER/SIGNAL PLAN - EAST
SCALE: 1/8" = 1'-0"
1

IF ABOVE BAR IS LESS THAN 1" DRAWING IS NOT TO SCALE

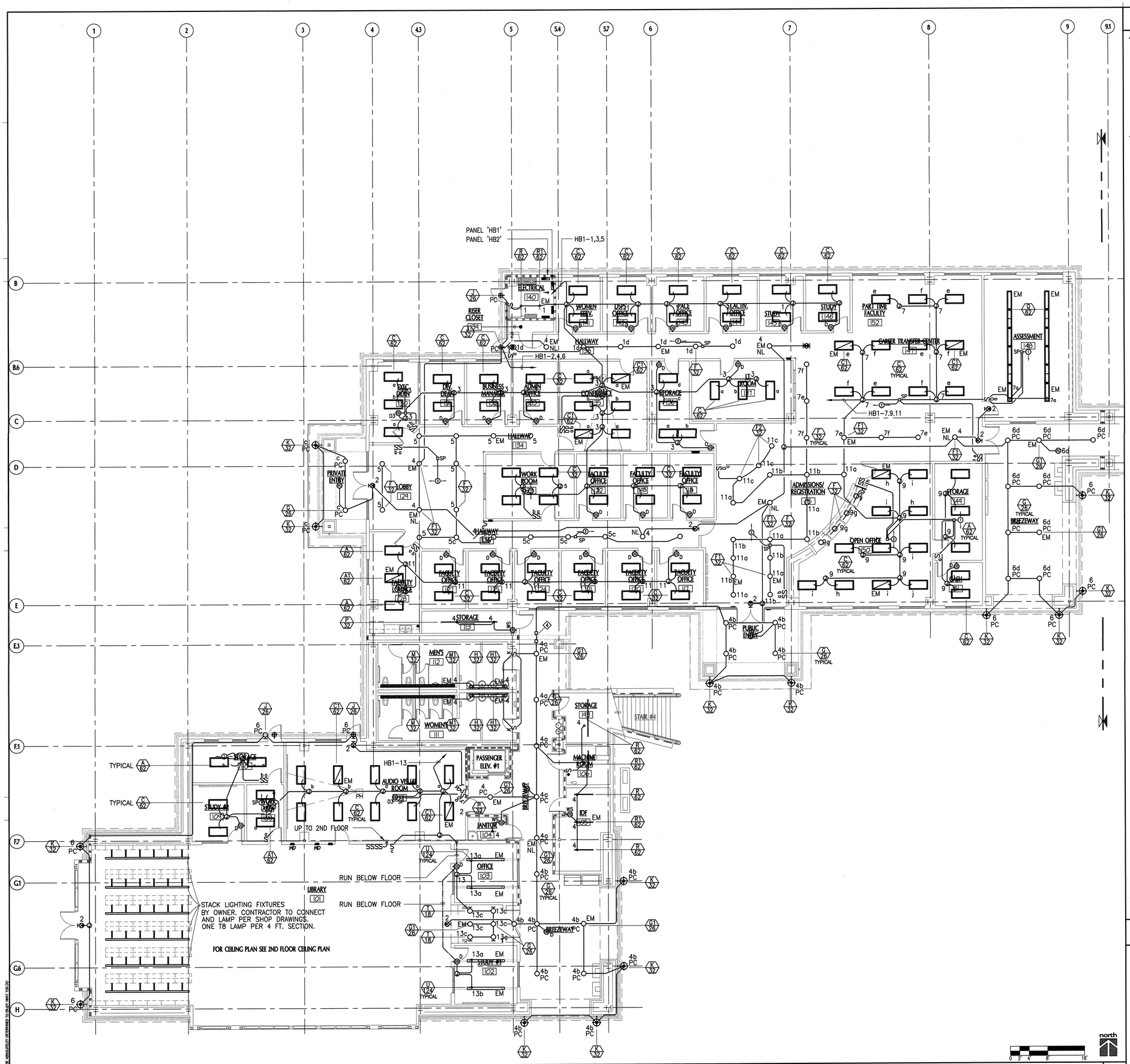

FIRST FLOOR LIGHTING PLAN - WEST 1
SCALE: 1/8" = 1'-0"

SHEET NOTES

1. EXTERIOR WALKWAY AND STAIRWAY LIGHTING SHALL BE TIME CLOCK AND PHOTOCELL CONTROLLED. RUN 3#12 THROUGHOUT CIRCUIT. UNCONTROLLED CONDUCTOR FOR EMERGENCY LIGHTING.
2. ALL CLASSROOM LIGHTING SHALL BE CONTROLLED BY OCCUPANCY SENSORS WITH DIMMING FEATURE FOR ALL FIXTURES IN THE CLASSROOM. PROVIDE AN UNCONTROLLED LEG FOR ALL LIGHTING CIRCUITS FOR EMERGENCY LIGHTING.
3. ALL EXIT LIGHT FIXTURES SHALL BE ON A 24 HOUR CIRCUIT WITH EMERGENCY BATTERY BACKUP.
4. PROVIDE FLEX CONDUIT WHERE CROSSING SEISMIC JIONT.

KEY PLAN

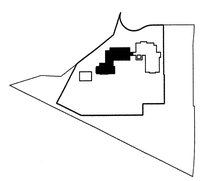

tBP
architecture planning interiors management

tBP/Architecture
1000 Burnett Ave, Suite 140
Concord, CA 94520
ph: 925.246.6419 fx: 925.246.6495

architect

CONSULTING ENGINEERS
282 Second Street, 3rd Floor
San Francisco, CA 94105
TEL (415) 247-8700
FAX (415) 247-8711
twfsf@pacbell.net

TOFT WOLFF FARROW Inc.

TWF #03007.00

consultant

APPROVED
IDENTIFICATION STAMP
DIVISION OF THE STATE ARCHITECT
APPL 01 105719
AC
DATE 6-9-04

agency

SAN RAMON VALLEY CENTER

CONTRA COSTA COMMUNITY COLLEGE DISTRICT

SAN RAMON, CALIFORNIA

owner

tBP project number: 20212.00

file name:

drawn by: ABC checked by:

date: 03-09-04 plot scale: 1:1

Rev:	date:	description:
1	05-26-04	DESIGN CLARIFICATIONS

drawing title: building no.:

FIRST FLOOR - WEST LIGHTING PLAN

drawing no.:

E2.31

drawing of

SHEET NOTES

1. EXTERIOR WALKWAY AND STAIRWAY LIGHTING SHALL BE TIME CLOCK AND PHOTOCELL CONTROLLED. RUN 3#12 THROUGHOUT CIRCUIT. UNCONTROLLED CONDUCTOR FOR EMERGENCY LIGHTING.
2. ALL CLASSROOM LIGHTING SHALL BE CONTROLLED BY OCCUPANCY SENSORS WITH DIMMING FEATURE FOR ALL FIXTURES IN THE CLASSROOM. PROVIDE AN UNCONTROLLED LEG FOR ALL LIGHTING CIRCUITS FOR EMERGENCY LIGHTING.
3. ALL EXIT LIGHT FIXTURES SHALL BE ON A 24 HOUR CIRCUIT WITH EMERGENCY BATTERY BACKUP.

MAIN DISTRIBUTION PANEL 'MDPA'
TRANSFORMER 'A'
PANEL 'PPA'
PANEL 'HA1'
LIGHTING CONTROL PANEL
PANEL 'LA1', 'LAIA'

FIRST FLOOR LIGHTING PLAN - EAST
SCALE: 1/8" = 1'-0"

1

KEY PLAN

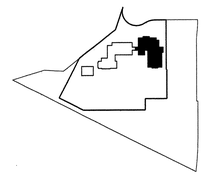

tBP architecture planning interiors management

tBP/Architecture
1000 Burnett Ave, Suite 140
Concord, CA 94520
ph: 9252466419 fx: 9252466495

architect

CONSULTING ENGINEERS
282 Second Street, 3rd Floor
San Francisco, CA 94105
(415) 247-8700
FAX (415) 247-8711
twf.sf@pacbell.net

TOFF WOLFF FARROW Inc.

TWF #03007.00

consultant

APPROVED
IDENTIFICATION STAMP
DIVISION OF THE STATE ARCHITECT
APPL ID 1-106063-21
AC # FLS
DATE 5-9-2004

agency

SAN RAMON VALLEY CENTER

CONTRA COSTA COMMUNITY COLLEGE DISTRICT

SAN RAMON, CALIFORNIA

owner

tBP project number : 202120.00
file name: .
drawn by: ABC checked by:
date: 03-09-04 plot scale: 1:1

Rev:	date:	description:
1	05-26-04	DESIGN CLARIFICATIONS

drawing title: building no:.
FIRST FLOOR - EAST LIGHTING PLAN

drawing no:
E2.32
drawing . of

IF ABSOLUTELY DETERMINED TO ENLARGE WHAT YOU DO

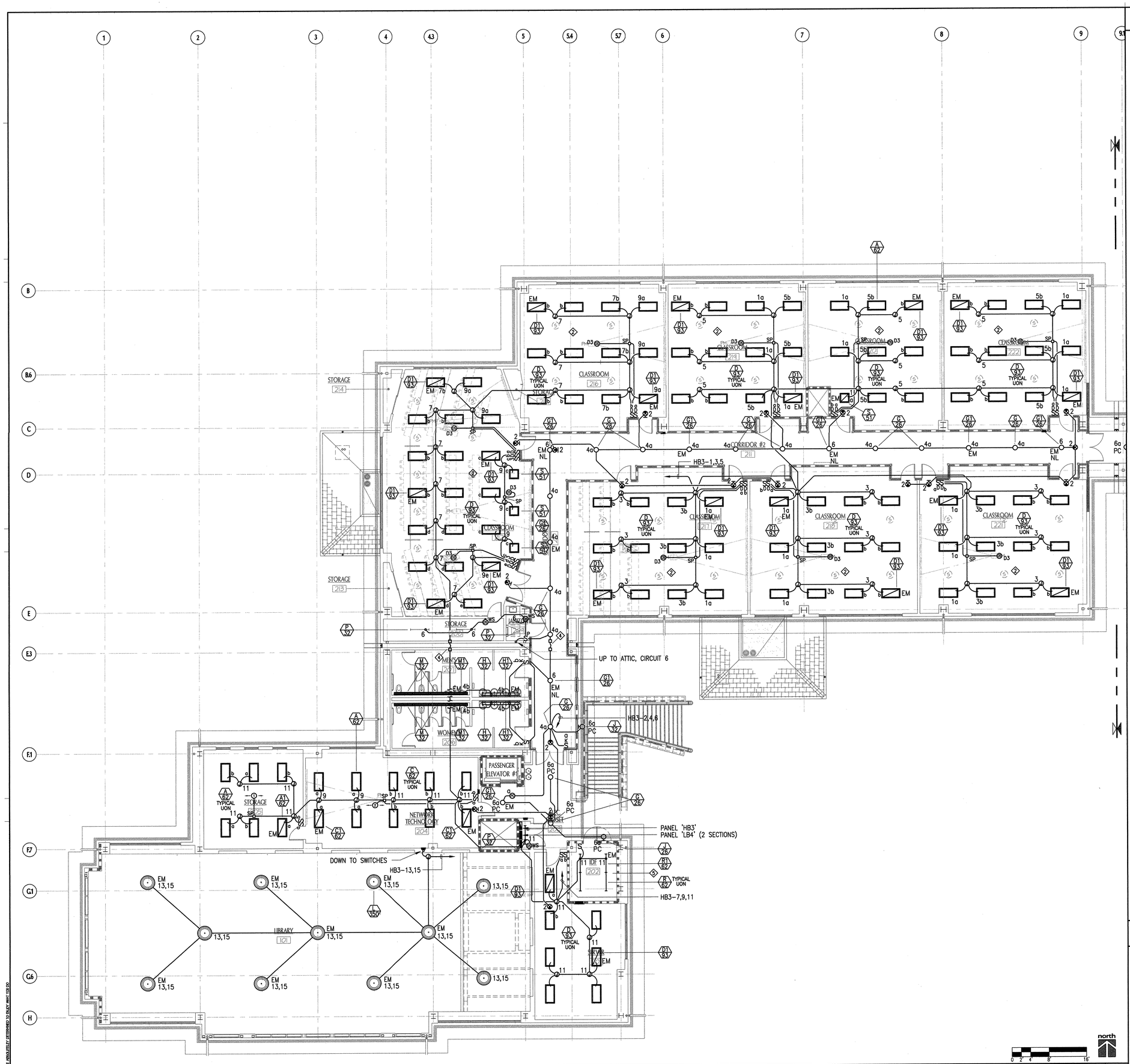

SECOND FLOOR LIGHTING PLAN - WEST 1
SCALE: 1/8" = 1'-0"

SHEET NOTES

1. EXTERIOR WALKWAY AND STAIRWAY LIGHTING SHALL BE TIME CLOCK AND PHOTOCELL CONTROLLED. RUN 3#12 THROUGHOUT CIRCUIT. UNCONTROLLED CONDUCTOR FOR EMERGENCY LIGHTING.
2. ALL CLASSROOM LIGHTING SHALL BE CONTROLLED BY OCCUPANCY SENSORS WITH DIMMING FEATURE FOR ALL FIXTURES IN THE CLASSROOM. PROVIDE AN UNCONTROLLED LEG FOR ALL LIGHTING CIRCUITS FOR EMERGENCY LIGHTING. SEE DETAIL A/E0.03
3. ALL EXIT LIGHT FIXTURES SHALL BE ON A 24 HOUR CIRCUIT WITH EMERGENCY BATTERY BACKUP.
4. PROVIDE FLEX CONDUIT WHERE CROSSING SEISMIC JIONT.
5. COORDINATE MOUNTING OF LIGHT FIXTURES WITH IT EQUIPMENT RACKING.

KEY PLAN

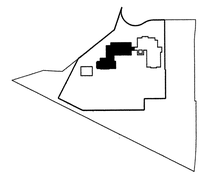

tBP
architecture planning interiors management

LICENSED ARCHITECT
STATE OF CALIFORNIA
NO. C-8885
REGISTERED PROFESSIONAL ENGINEER
No. 7650
STATE OF CALIFORNIA

tBP/Architecture
1000 Burnett Ave, Suite 140
Concord, CA 94520
ph: 925.246.6419 fx: 925.246.6495
architect

CONSULTING ENGINEERS
282 Second Street, 3rd Floor
San Francisco, CA 94105
TEL (415) 247-8700
FAX (415) 247-8711
twfsf@pacbell.net
TOFT WOLFF FARROW Inc.
TWF #03007.00
consultant

APPROVED
IDENTIFICATION STAMP
DIVISION OF THE STATE ARCHITECT
APPL 01 105719
AC
DATE 6-9-04
agency

SAN RAMON VALLEY CENTER

CONTRA COSTA COMMUNITY COLLEGE DISTRICT

SAN RAMON, CALIFORNIA

owner

tBP project number : 20212.00
file name: .
drawn by: ABC checked by:
date: 03-09-04 plot scale: 1:1

Rev:	date:	description:
1	05-26-04	DESIGN CLARIFICATIONS

drawing title: building no.: .
SECOND FLOOR - WEST LIGHTING PLAN
drawing no.:
E2.41
drawing . of

168

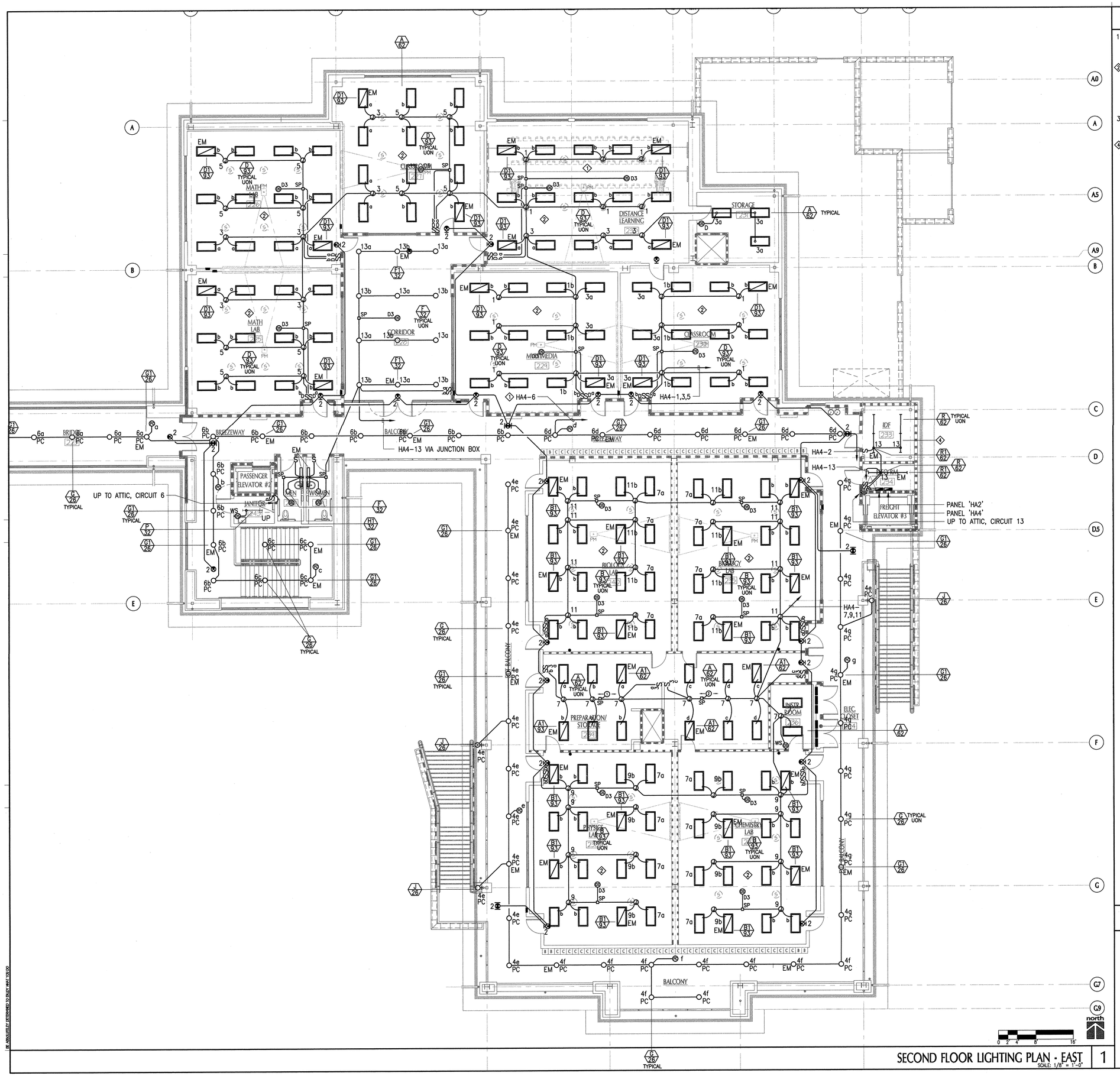

SECOND FLOOR LIGHTING PLAN - EAST
SCALE: 1/8" = 1'-0"

1

SHEET NOTES

1. EXTERIOR WALKWAY AND STAIRWAY LIGHTING SHALL BE TIME CLOCK AND PHOTOCELL CONTROLLED. RUN 3#12 THROUGHOUT CIRCUIT. UNCONTROLLED CONDUCTOR FOR EMERGENCY LIGHTING.
2. ALL CLASSROOM LIGHTING SHALL BE CONTROLLED BY OCCUPANCY SENSORS WITH DIMMING FEATURE FOR ALL FIXTURES IN THE CLASSROOM. PROVIDE AN UNCONTROLLED LEG FOR ALL LIGHTING CIRCUITS FOR EMERGENCY LIGHTING. SEE DETAIL A/E0.03
3. ALL EXIT LIGHT FIXTURES SHALL BE ON A 24 HOUR CIRCUIT WITH EMERGENCY BATTERY BACKUP.
4. COORDINATE MOUNTING OF LIGHT FIXTURES WITH IT EQUIPMENT RACKING.

KEY PLAN

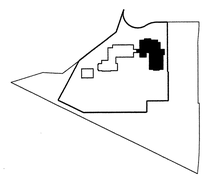

tBP
architecture planning interiors management

tBP/Architecture
1000 Burnett Ave, Suite 140
Concord, CA 94520
ph: 925.246.6419 fx: 925.246.6495

architect

CONSULTING ENGINEERS
282 Second Street, 3rd Floor
San Francisco, CA 94105
TEL (415) 247-8700
FAX (415) 247-8711
twfsf@pacbell.net

TOFT WOLFF FARROW Inc.

TWF #03007.00

consultant

APPROVED
IDENTIFICATION STAMP
DIVISION OF THE STATE ARCHITECT
APPL 01 106082
AC FLS SS
DATE 6-9-04

agency

SAN RAMON VALLEY CENTER

CONTRA COSTA COMMUNITY COLLEGE DISTRICT

SAN RAMON, CALIFORNIA

owner

tBP project number: 20212.00
file name:
drawn by: ABC checked by:
date: 03-04-04 plot scale: 1:1

Rev:	date:	description:
1	05-26-04	DESIGN CLARIFICATIONS

drawing title: building no.:
SECOND FLOOR - EAST LIGHTING PLAN

drawing no.:
E2.42
drawing of

169

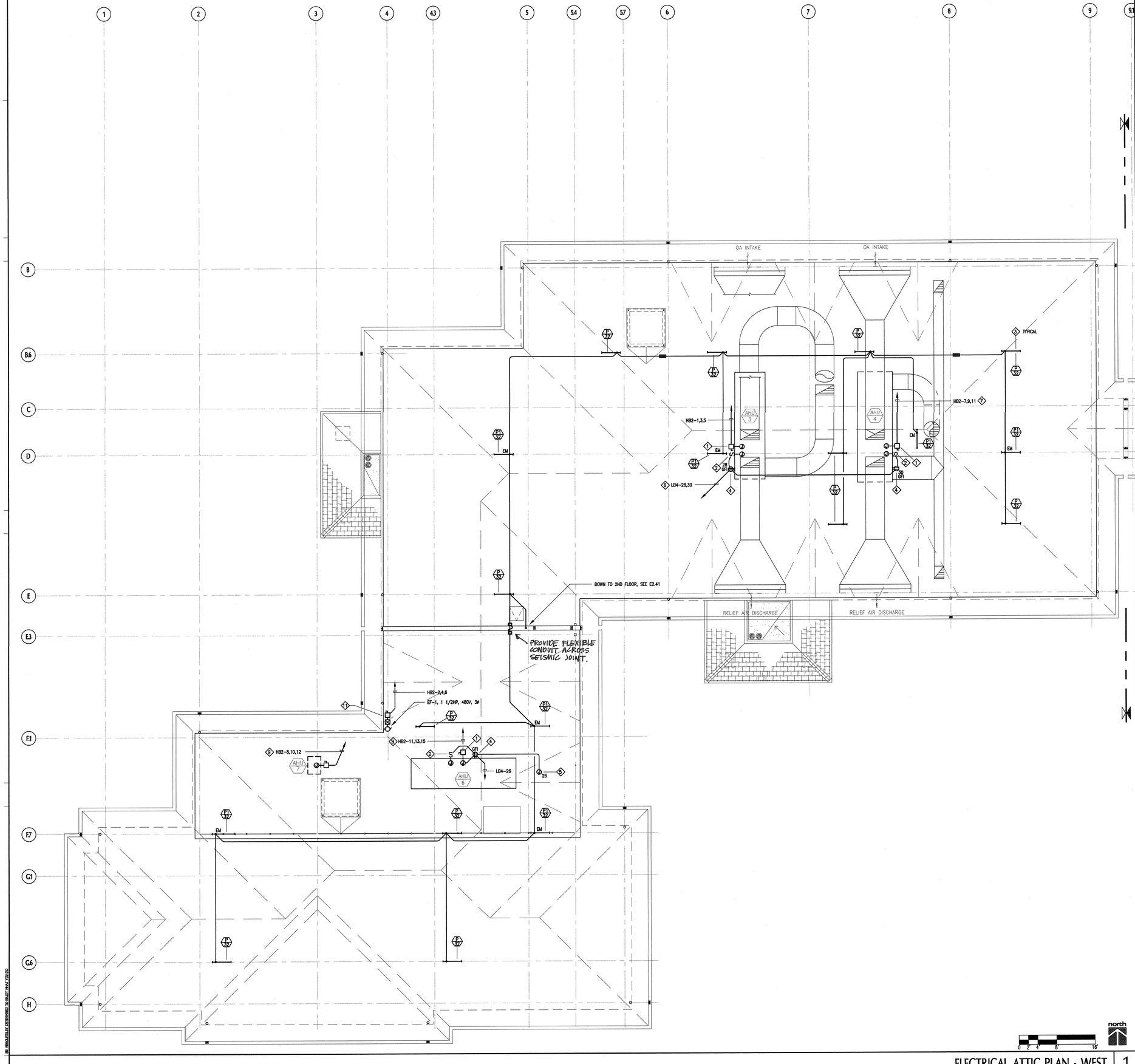

SHEET NOTES

1. 60A, 3P, 480V, NON-FUSED, NEMA 1 DISCONNECT SWITCH. CONNECT TO MAIN JUNCTION BOX ON AC UNIT.
2. TOGGLE TYPE 20A RATED DISCONNECT SWITCH; CONNECT TO 120V JUNCTION BOX N AC UNIT.
3. LIGHTING FIXTURES SHALL BE CHAIN HUNG FROM STRUCTURE ABOVE. COORDINATE LOCATIONS WITH MECHANICAL AND STRUCTURE.
4. GROUND FAULT RECEPTACLE; LOCATE AT BASE OF AC UNIT.
5. 120V CONNECTION FOR VAV CONTROL TRANSFORMER. COORDINATE WITH MECHANICAL DRAWINGS.
6. 1"C, 3#6 + 1#10G TO PANEL.
7. 1"C, 3#8 + 1#10G TO PANEL.
8. 1"C, 3#12 + 1#12G TO PANEL.
9. 3/4"C, 3#12 + 1#12G TO PANEL.
10. ROUGH IN POINTS FOR ALL MECHANICAL EQUIPMENT SHALL BE COORDINATED WITH FINAL SHOP DRAWINGS. VERIFY LOCATIONS PRIOR TO ROUGHING CONDUITS.
11. COMBINATION DISCONNECT SWITCH AND STARTER; NEMA 1, 480V, 3ø, 30A, 3P DISCONNECT SWITCH.

KEY PLAN

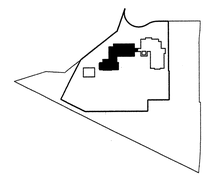

ELECTRICAL ATTIC PLAN - WEST | 1
SCALE: 1/8" = 1'-0"

north

0 2' 4' 8' 16'

BE ABSOLUTELY DESIGNED TO READ WHAT YOU DO

tBP/architecture
1000 Burnett Ave, Suite 140
Concord, CA 94520
ph: 925.246.6419 fx: 925.246.6495

CONSULTING ENGINEERS
382 Second Street, 2nd Floor
San Francisco, CA 94105
TEL (415) 247-8700
FAX (415) 247-8701
twfsf@pacbell.net
TOFT WOLFF FARROW Inc.

TWF #03007.00

REGISTERED PROFESSIONAL ENGINEER No. 7650 ELECTRICAL

REVIEWED FOR ACCESSIBILITY COMPLIANCE
DSA
DIVISION OF THE STATE ARCHITECT
APPL. NO. 10STR
BY: [illegible] DATE: 3/15/04

architect
consultant
agency

SAN RAMON VALLEY CENTER

CONTRA COSTA COMMUNITY COLLEGE DISTRICT

SAN RAMON, CALIFORNIA

owner

tBP project number : 20012.00
file name: .
drawn by: ABC checked by:
date: 03-09-04 plot scale: 1:1

Rev:	date:	description:
1	03-09-04	DSA BACKCHECK

drawing title: building no: .
ELECTRICAL ATTIC PLAN WEST, LIGHTING/POWER

drawing no:
E2.51
drawing . of

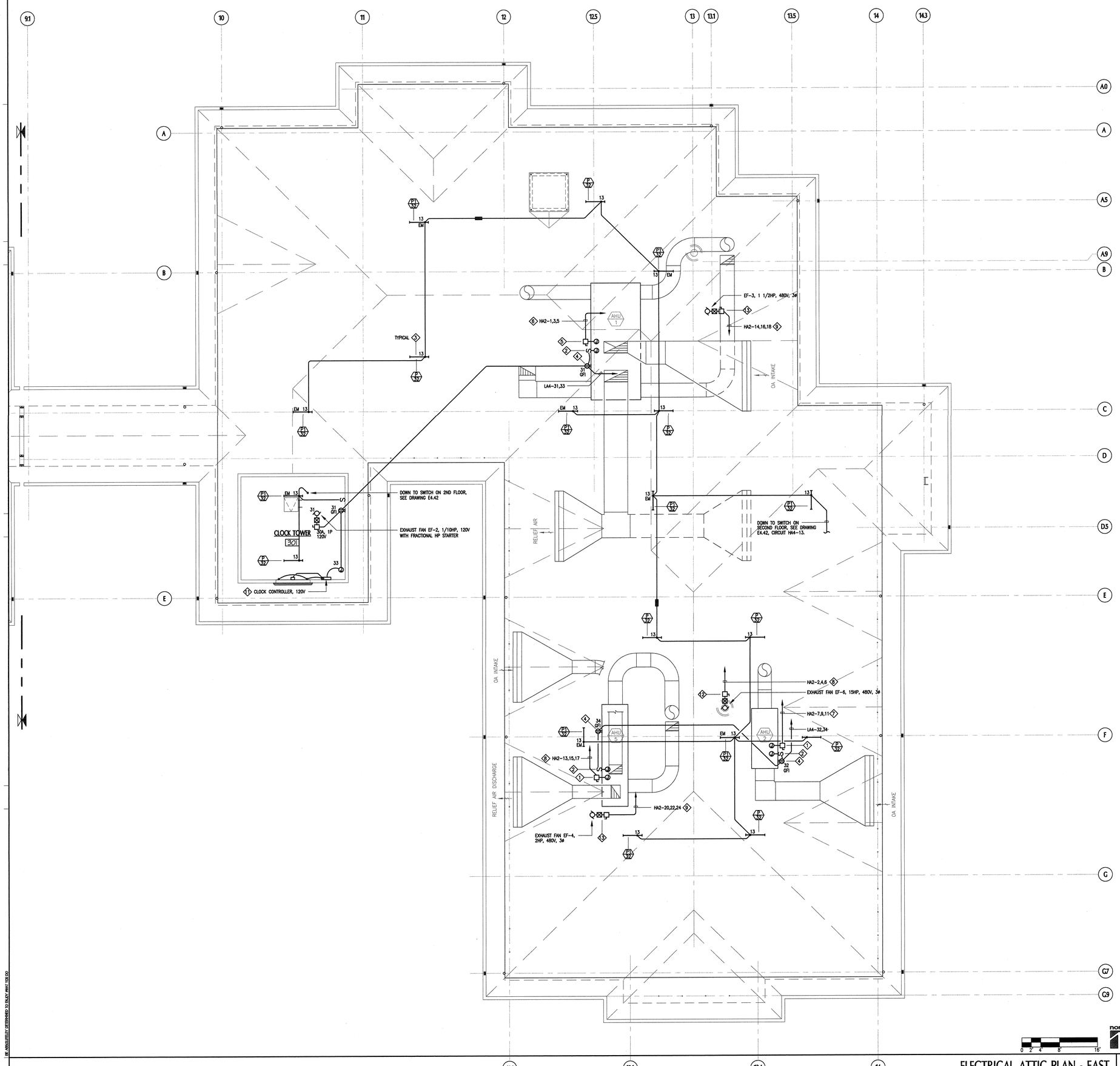

ELECTRICAL ATTIC PLAN - EAST 1
SCALE: 1/8" = 1'-0"

SHEET NOTES

1. 60A, 3P, 480V, NON-FUSED, NEMA 1 DISCONNECT SWITCH. CONNECT TO MAIN JUNCTION BOX ON AC UNIT.
2. TOGGLE TYPE 20A RATED DISCONNECT SWITCH; CONNECT TO 120V JUNCTION BOX ON AC UNIT.
3. LIGHTING FIXTURES SHALL BE CHAIN HUNG FROM STRUCTURE ABOVE. COORDINATE LOCATIONS WITH MECHANICAL AND STRUCTURE.
4. GROUND FAULT RECEPTACLE; LOCATE AT BASE OF AC UNIT.
5. 100A, 3P, 480V, NON-FUSED, NEMA 1 DISCONNECT SWITCH; CONNECT TO MAIN JUNCTION BOX ON AC UNIT.
6. 1/2"C, 3#2 + 1#8G TO PANEL.
7. 3/4"C, 3#10 + 1#10G TO PANEL.
8. 3/4"C, 3#8 + 1#10G TO PANEL.
9. 3/4"C, 3#12 + 1#12G TO PANEL.
10. ROUGH IN POINTS FOR ALL MECHANICAL EQUIPMENT SHALL BE COORDINATED WITH FINAL SHOP DRAWINGS. VERIFY LOCATIONS PRIOR TO ROUGHING CONDUITS.
11. ELECTRIC TIME COMPAMY CLOCK CONTROLLER AND CLOCK. SEE ARCHITECTURAL DRAWINGS FOR DETAIL AND SPECIFICATION. WIRE CONTROLLER, LIGHTING AND CLOCK IN ACCORDANCE WITH MANUFACTURERS SHOP DRAWINGS AND WIRING DIAGRAMS.
12. COMBINATION DISCONNECT SWITCH AND STARTER; NEMA 1, 480V, 3ø, 60A, 3P DISCONNECT SWITCH.
13. COMBINATION DISCONNECT SWITCH AND STARTER; NEMA 1, 480V, 3ø, 30A, 3P DISCONNECT SWITCH.

KEY PLAN

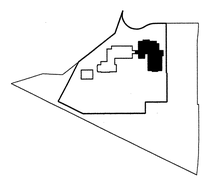

tBP
architecture planning interiors management

LICENSED ARCHITECT
STATE OF CALIFORNIA
NO. C-6865
RICHARD A. MANGUM, A.I.A.
NEW 12-31-05

tBP/Architecture
1000 Burnett Ave, Suite 140
Concord, CA 94520
ph: 925.246.6419 fx: 925.246.6495

architect

REGISTERED PROFESSIONAL ENGINEER
LAWRENCE S. WOLFF
No. 7650
Exp. 09/30/2004
ELECTRICAL
STATE OF CALIFORNIA

CONSULTING ENGINEERS
282 Second Street, 3rd Floor
San Francisco, CA 94105
TEL (415) 247-8700
FAX (415) 247-8711
twfsf@pacbell.net

TOFT WOLFF FARROW Inc.

TWF #03007.00

consultant

IDENTIFICATION STAMP
DIV. OF THE STATE ARCHITECT
OFFICE OF REGULATION SERVICES
APPL NO. 105719
AC
FLS
DATE

agency

SAN RAMON VALLEY CENTER

CONTRA COSTA COMMUNITY COLLEGE DISTRICT

SAN RAMON, CALIFORNIA

owner

tBP project number : 20212.00

file name: .

drawn by: ABC checked by:

date: 03-09-04 plot scale: 1:1

Rev:	date:	description:
1	03-09-04	DSA BACKCHECK

drawing title: building no: .

ELECTRICAL ATTIC PLAN
EAST, LIGHTING/POWER

drawing no:

E2.52

drawing . of

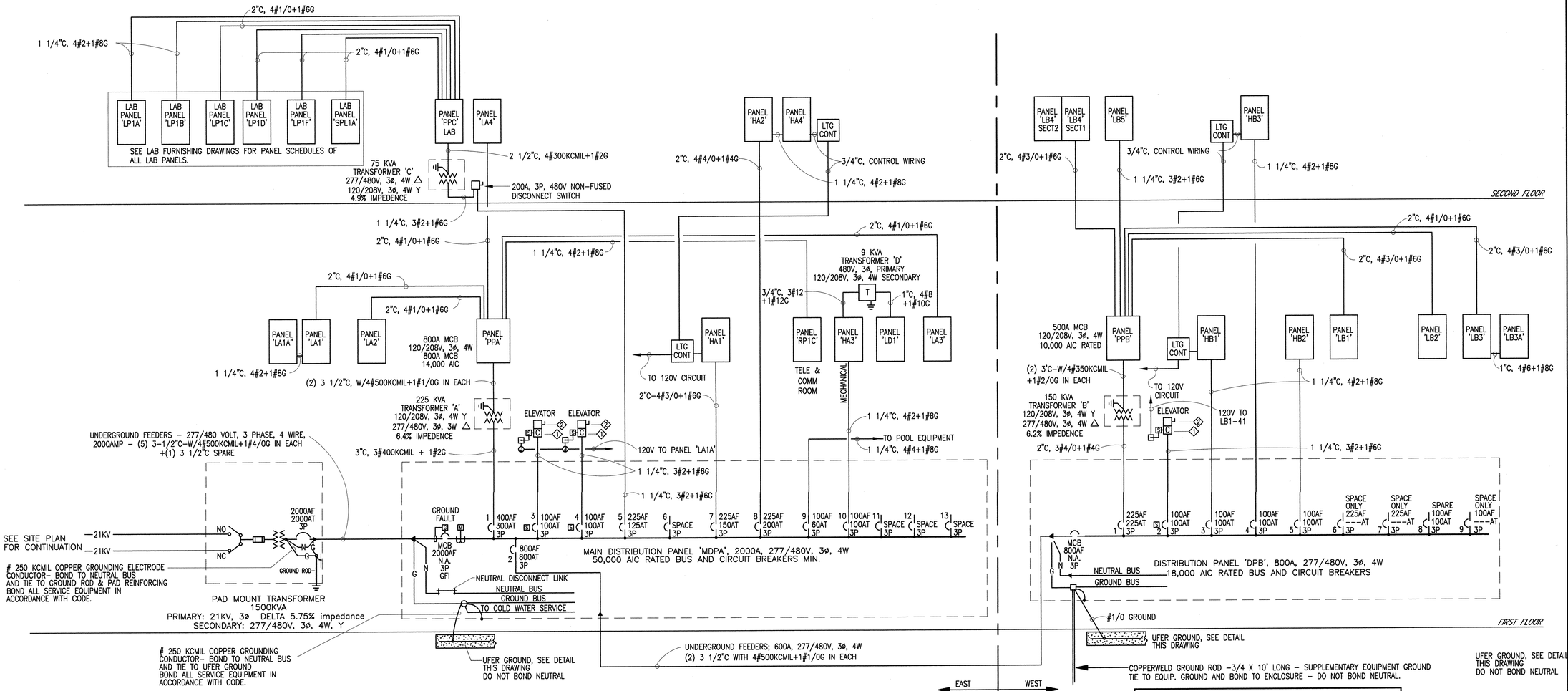

A 3.01 ONE LINE DIAGRAM - BUILDINGS 6 & 7

NOT TO SCALE

ONE LINE DIAGRAM NOTES

1. 100A FRAME, 3 POLE, 480V, NON-AUTOMATIC CIRCUIT BREAKER WITH SHUNT TRIP. PROVIDE 120V, 15A, 1P CIRCUIT FOR SHUNT TRIP CIRCUIT.
2. FUSED DISCONNECT SWITCH FOR ELEVATOR; 100A, 3P, NEMA 1. FUSE SIZE PER ELEVATOR CONTRACTORS REQUIREMENTS.

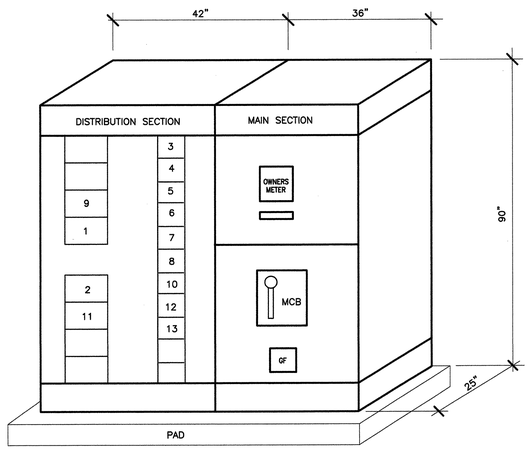

FOR ANCHORAGE OF SWITCHBOARD SEE DETAIL J 4.01

B 3.01 SWITCHBOARD 'MDPA' - ELEVATION

NOT TO SCALE

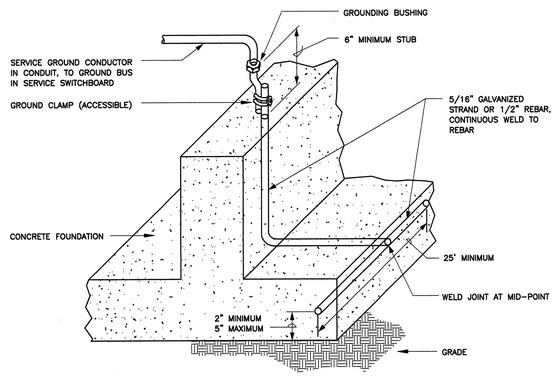

C 3.01 UFER GROUNDING DETAIL

NOT TO SCALE

tBP
architecture
planning
interiors
management
tBP/Architecture
1000 Burnett Ave, Suite 140
Concord, CA 94520
ph: 925.246.6419 fx: 925.246.6495
architect
CONSULTING ENGINEERS
2855 Telegraph Ave, Suite 400
San Francisco, CA 94105
ph: (415) 841-8100
FX (415) 841-8111
twfet@pacbell.net
TOFT WOLFF FARROW Inc.
TWF #03007.00
consultant

APPROVED
DSA - REPRODUCTION STAMP
DIVISION OF THE STATE ARCHITECT
OFFICE OF REGULATION SERVICES
APPL NO. 10/0719
INCT 2-154-00

agency

SAN RAMON VALLEY CENTER
CONTRA COSTA COMMUNITY COLLEGE DISTRICT
SAN RAMON, CALIFORNIA

owner

tBP project number : 20212.00
file name: .
drawn by: ABC checked by:
date: 03-09-04 plot scale: 1:1

Rev:	date:	description:
1	05-26-04	DESIGN CLARIFICATIONS

drawing title: building no: .
ONE LINE DIAGRAMS

drawing no:
E3.01
drawing . of

DE APPLICABILITY DETERMINED TO EXPIRE APRIL 1, 2009

PANEL 'PPA'

VOLTS: 120/208V | PHASE: 3 | MAIN: 800A MCB
MOUNTING: SURFACE | WIRE: 4 | BUSSING:800A

LOAD	*	A-VA	B-VA	C-VA	BKR	CT	CT	BKR	A-VA	B-VA	C-VA	*	LOAD
PANEL 'LA1'	P	18320			125/3	1	2	125/3	15400			P	PANEL 'LA4'
----	P		17170		---	3	4	---		13050		P	----
----	P			14800	---	5	6	---			11050	P	----
PANEL 'LA2'	P	8000			125/3	7	8	100/3	5440			P	PANEL 'RP1C'
----	P		8000		---	9	10	---		4600		P	----
----	P			7000	---	11	12	---			4980	P	----
PANEL 'LA3'	P	12850			125/3	13	14	100/3	6000			N	ELECTRIC KILN
----	P		9850		---	15	16	---		6000		N	----
----	P			10400	---	17	18	---			6000	N	----
SPACE						19	20						SPACE
SPACE						21	22						SPACE
SPACE						23	24						SPACE
SPACE						25	26	30/3	1500			M	DUST COLLECTOR
SPACE						27	28	---		1500		M	---
SPACE						29	30	---			1500	M	---
SPACE						31	32						SPACE
SPACE						33	34						SPACE
SPACE						35	36						SPACE
SPACE						37	38						SPACE
SPACE						39	40						SPACE
SPACE						41	42						SPACE
PHASE TOTALS:		67510	60170	55710	183380 =TOTAL CONNECTED LOAD,VA (FOR DEMAND LOAD SEE BELOW)								
PHASE AMPERES:		562.2	501.0	463.9									

*DEMAND LOAD CALCULATION:
L=LIGHTING LOADS: 1.25 X 19000 = 23750 VA
C=CONTINUOUS LOADS, OTHER: 1.25 X 0 = 0 VA
M=MOTOR LOADS (INCL LOST): 1.00 X 14140 = 14140 VA
LARGEST, VA: 0.25 X 0 = 0 VA
R=RECEPTACLES: 1ST 10K: 1.00 X 10000 = 10000 VA
BALANCE: 0.50 X 69400 = 34700 VA
K=KITCHEN LOADS: QTY: 0 1.00 X 0 = 0 VA
N=NONCONTINUOUS LOADS, OTHER: 1.00 X 70850 = 70850 VA
(P=PANEL, INCL. IN ABOVE)

NEW DEMAND LOAD = 153440 VA = 425.9 AMPERES
EXISTING LOAD VA X 1.25 = 0 VA = 0.0 AMPERES
TOTAL LOAD = 153440 VA = 425.9 AMPERES

NOTES:

PANEL 'LD1'

VOLTS: 120/208V | PHASE: 3 | MAIN: 35A, 3P CB
MOUNTING: SURFACE | WIRE: 4 | BUSSING: 100A

LOAD	*	A-VA	B-VA	C-VA	BKR	CT	CT	BKR	A-VA	B-VA	C-VA	*	LOAD
SPRINKLER ALARM BELL	N	300			20/1	1	2	20/1	250			N	MECH CONTROL
AIR DRYER	M		900		20/1	3	4	20/1		720		R	RECEPACLES
CIRC.PUMPS CP-1, CP-2	M			500	20/1	5	6						SPACE
SPACE						7	8						SPACE
SPACE						9	10						SPACE
SPACE						11	12						SPACE
SPACE						13	14						SPACE
SPACE						15	16						SPACE
SPACE						17	18						SPACE
PHASE TOTALS:		550	1620	500	2670 =TOTAL CONNECTED LOAD,VA (FOR DEMAND LOAD SEE BELOW)								
PHASE AMPERES:		4.6	13.5	4.2									

*DEMAND LOAD CALCULATION:
L=LIGHTING LOADS: 1.25 X 0 = 0 VA
C=CONTINUOUS LOADS, OTHER: 1.25 X 0 = 0 VA
M=MOTOR LOADS (INCL LOST): 1.00 X 1400 = 1400 VA
LARGEST, VA: 0.25 X 900 = 225 VA
R=RECEPTACLES: 1ST 10K: 1.00 X 720 = 720 VA
BALANCE: 0.50 X 0 = 0 VA
K=KITCHEN LOADS: QTY: 0 1.00 X 0 = 0 VA
N=NONCONTINUOUS LOADS, OTHER: 1.00 X 550 = 550 VA
(P=PANEL, INCL. IN ABOVE)

NEW DEMAND LOAD = 2895 VA = 8.0 AMPERES
EXISTING LOAD VA X 1.25 = 0 VA = 0.0 AMPERES
TOTAL LOAD = 2895 VA = 8.0 AMPERES

NOTES:

PANEL 'MDPA' (EAST)

VOLTS:277/480 | PHASE: 3 | MAIN: SEE RISER
MOUNTING:FLOOR | WIRE: 4 | BUSSING:

LOAD	*	A-VA	B-VA	C-VA	BKR	CT	CT	BKR	A-VA	B-VA	C-VA	*	LOAD
TRANSFORMER 'A'	P	67510			--/3	1	8	-/3	37883			P	PANEL 'HA2'
(PANEL 'PPA')	P		60170		---			---		36593		P	----
----	P			55710	---			---			36193	P	----
DISTR PANEL 'B'	P	120440			--/3	2	9	-/3	6500			M	POOL PUMP
(PANEL 'MDPB')	P		123315		---			---		6500		M	----
----	P			112505	---			---			6500	M	----
ELEVATOR	M	14380			--/3	3	10	-/3	14790			P	PANEL 'HA3'
----	M		14380		---			---		15860		P	----
----	M			14380	---			---			14740	P	----
ELEVATOR	M	14380			--/3	4	11	--/3					SPACE ONLY 225A FR
----	M		14380		---			---					----
----	M			14380	---			---					----
TRANSFORMER 'C'	P	24432			--/3	5	12	--/3					SPACE ONLY 100A FR
(PANEL 'PPC')	P		24432		---			---					----
----	P			24432	---			---					----
AC UNIT AC-1	M	16860			--/3	6	13	--/3					SPACE ONLY 100A FR
----	M		16860		---			---					----
----	M			16860	---			---					----
PANEL 'HA1'	P	7425			--/3	7	14	--/3					SPACE ONLY 225A FR
----	P		8800		---		15	--/3					SPACE ONLY 100A FR
----	P			8700	---		16	--/3					SPACE ONLY 100A FR
PHASE TOTALS:		324410	320890	304200	949500 =TOTAL CONNECTED LOAD,VA (FOR DEMAND LOAD SEE BELOW)								
PHASE AMPERES:		1170.6	1157.9	1097.7									

*DEMAND LOAD CALCULATION:
L=LIGHTING LOADS: 1.25 X 106525 = 133156 VA
C=CONTINUOUS LOADS, OTHER: 1.25 X 0 = 0 VA
M=MOTOR LOADS (INCL LOST): 1.00 X 447681 = 447681 VA
LARGEST, VA: 0.25 X 109000 = 27250 VA
R=RECEPTACLES: 1ST 10K: 1.00 X 10000 = 10000 VA
BALANCE: 0.50 X 174840 = 87420 VA
K=KITCHEN LOADS: QTY: 0 1.00 X 0 = 0 VA
N=NONCONTINUOUS LOADS, OTHER: 1.00 X 210454 = 210454 VA
(P=PANEL, INCL. IN ABOVE)

NEW DEMAND LOAD = 915981 VA = 1101.8 AMPERES
EXISTING LOAD VA X 1.25 = 0 VA = 0.0 AMPERES
TOTAL LOAD = 915981 VA = 1101.8 AMPERES

NOTES:
SCHEDULE SHOWN FOR LOAD CALCULATION ONLY
SEE ONE LINE DIAGRAM FOR CIRCUIT BREAKER FRAME AND TRIP RATINGS

PANEL 'RP1C'

VOLTS: 120/208V | PHASE: 3 | MAIN: MLO
MOUNTING: SURFACE | WIRE: 4 | BUSSING:225A

LOAD	*	A-VA	B-VA	C-VA	BKR	CT	CT	BKR	A-VA	B-VA	C-VA	*	LOAD
RECEPTACLES	R	540			20/1	1	2	20/1	600			N	TV SYSTEM
SPACE						3	4	20/1		600		N	INCL. YOLE SYSTEM
SPACE						5	6	20/1			360	R	RECEPTACLE
STARLINE #1	N	2000			60/3	7	8						SPACE
----	N		2000		---	9	10						SPACE
----	N			2000	---	11	12	20/1a			600	N	FIRE ALARM CONTROL PANEL
STARLINE #2	N	2000			60/3	13	14	20/1a	300			N	NAP-1B FIRE ALARM
----	N		2000		---	15	16	20/1					SPACE
----	N			2000	---	17	18						SPACE
SPACE						19	20						SPACE
SPACE						21	22						SPACE
SPACE						23	24						SPACE
SPACE						25	26						SPACE
SPACE						27	28						SPACE
SPACE						29	30						SPACE
PHASE TOTALS:		5440	4600	4960	15000 =TOTAL CONNECTED LOAD,VA (FOR DEMAND LOAD SEE BELOW)								
PHASE AMPERES:		45.3	38.3	41.3									

*DEMAND LOAD CALCULATION:
L=LIGHTING LOADS: 1.25 X 0 = 0 VA
C=CONTINUOUS LOADS, OTHER: 1.25 X 0 = 0 VA
M=MOTOR LOADS (INCL LOST): 1.00 X 0 = 0 VA
LARGEST, VA: 0.25 X 0 = 0 VA
R=RECEPTACLES: 1ST 10K: 1.00 X 900 = 900 VA
BALANCE: 0.50 X 0 = 0 VA
K=KITCHEN LOADS: QTY: 0 1.00 X 0 = 0 VA
N=NONCONTINUOUS LOADS, OTHER: 1.00 X 14100 = 14100 VA
(P=PANEL, INCL. IN ABOVE)

NEW DEMAND LOAD = 15000 VA = 41.6 AMPERES
EXISTING LOAD VA X 1.25 = 0 VA = 0.0 AMPERES
TOTAL LOAD = 15000 VA = 41.6 AMPERES

NOTES:
a - Lock on circuit breaker paint red Lable "Fire Alarm"

PANEL 'LA1'

VOLTS: 120/208V | PHASE: 3 | MAIN: MLO
MOUNTING: SURFACE | WIRE: 4 | BUSSING: 225

LOAD	*	A-VA	B-VA	C-VA	BKR	CT	CT	BKR	A-VA	B-VA	C-VA	*	LOAD
ELEV RM RECEPT	R	500			20/1	1	2	20/1	1200			R	RECEPTACLES
ELEV PIT LIGHT, RECEPT	N		300		20/1	3	4	20/1		500		M	FIRE SMOKE DAMPERS
RECEPTACLES	R			1600	20/1	5	6	20/1			1200	M	VENT HOOD -- KILN
RECEPTACLES	R	1200			20/1	7	8	20/1	1200			R	RECEPTACLES
RECEPTACLES	R		1200		20/1	9	10	20/1		1200		R	RECEPTACLES
SPARE					20/1	11	12	20/1			300	M	GAS KILN CONTROL
RECEPTS, EWC	N	600			20/1	13	14	60/3	2500			N	IDF ROOM -- STARLINE
ELEV RM RECEPT	R		500		20/1	15	16	---		2500			
ELEV PIT LIGHT, RECEPT	N			300	20/1	17	18	---			2500	N	---
RECEPTACLES	R	1200			20/1	19	20	20/1	1500			L	TRACK LIGHTING
RECEPTACLES	R		1200		20/1	21	22	20/1		1500		L	TRACK LIGHTING
TRACK LIGHTING	L			1000	20/1	23	24	20/1			1500	L	TRACK LIGHTING
ACO-1 OUTDOOR UNIT	M	1085			20/2	25	26	20/1	1500			L	TRACK LIGHTING
----	M		1085		---	27	28	20/1		1500		L	TRACK LIGHTING
AC1-2 INDOOR UNIT	M			600	15/1	29	30	20/1			1500	L	TRACK LIGHTING
ACO-3 OUTDOOR UNIT	M	1085			20/2	31	32	20/1	1500			L	TRACK LIGHTING
----	M		1085		---	33	34	20/1		1500		L	TRACK LIGHTING
SPARE					20/1	35	36	20/1			1500	L	TRACK LIGHTING
PANEL 'LA1A'	P	1750			90/3	37	38	20/1	1500			L	TRACK LIGHTING
----	P		1600		---	39	40	20/1		1500		L	TRACK LIGHTING
----	P			1300	---	41	42	20/1			1500	L	TRACK LIGHTING
PHASE TOTALS:		18320	17170	14800	50290 =TOTAL CONNECTED LOAD,VA (FOR DEMAND LOAD SEE BELOW)								
PHASE AMPERES:		152.5	143.0	123.2									

*DEMAND LOAD CALCULATION:
L=LIGHTING LOADS: 1.25 X 19000 = 23750 VA
C=CONTINUOUS LOADS, OTHER: 1.25 X 0 = 0 VA
M=MOTOR LOADS (INCL LOST): 1.00 X 9040 = 9040 VA
LARGEST, VA: 0.25 X 0 = 0 VA
R=RECEPTACLES: 1ST 10K: 1.00 X 10000 = 10000 VA
BALANCE: 0.50 X 1000 = 500 VA
K=KITCHEN LOADS: QTY: 0 1.00 X 0 = 0 VA
N=NONCONTINUOUS LOADS, OTHER: 1.00 X 11250 = 11250 VA
(P=PANEL, INCL. IN ABOVE)

NEW DEMAND LOAD = 54540 VA = 151.4 AMPERES
EXISTING LOAD VA X 1.25 = 0 VA = 0.0 AMPERES
TOTAL LOAD = 54540 VA = 151.4 AMPERES

NOTES:

PANEL 'LA2'

VOLTS: 120/208V | PHASE: 3 | MAIN: MLO
MOUNTING: SURFACE | WIRE: 4 | BUSSING: 225A

LOAD	*	A-VA	B-VA	C-VA	BKR	CT	CT	BKR	A-VA	B-VA	C-VA	*	LOAD
RECEPTACLES	R	1200			20/1	1	2	20/1	1000			N	AUDIO VISUAL/ PROJECTORS
RECEPTACLES	R		1200		20/1	3	4	20/1		1000		N	AUDIO VISUAL/ PROJECTORS
RECEPTACLES	R			1200	20/1	5	6	20/1			1000	N	AUDIO VISUAL/ PROJECTORS
RECEPTACLES	R	1200			20/1	7	8	20/1	1000			N	AUDIO VISUAL/ PROJECTORS
RECEPTACLES	R		1200		20/1	9	10	20/1		900		R	RECEPTACLES
RECEPTACLES	R			1200	20/1	11	12	20/1			900	R	RECEPTACLES
RECEPTACLES	R	1200			20/1	13	14	20/1	900			R	RECEPTACLES
RECEPTACLES	R		1200		20/1	15	16	20/1		900		R	RECEPTACLES
RECEPTACLES	R			1200	20/1	17	18	20/1			900	R	RECEPTACLES
RECEPTACLES	R	1200			20/1	19	20	20/1	900			R	RECEPTACLES
RECEPTACLES	R		1200		20/1	21	22	20/1		900		R	RECEPTACLES
RECEPTACLES	R			1200	20/1	23	24	20/1			900	R	RECEPTACLES
RECEPTACLES	R	1200			20/1	25	26	20/1	750			N	PRINTER
PRINTER	N		750		20/1	27	28	20/1					SPARE
RECEPTACLES	R			1200	20/1	29	30	20/1			1000	N	AUDIO VISUAL/PROJECTORS
FURN SYSTEM WHIP	R	900			20/1	31	32	20/1	1000			N	AUDIO VISUAL/PROJECTORS
FURN SYSTEM WHIP	R		900		20/1	33	34	20/1		900		R	FURN SYSTEM WHIP
FURN SYSTEM WHIP	R			900	20/1	35	36	20/1			900	R	FURN SYSTEM WHIP
FURN SYSTEM WHIP	R	900			20/1	37	38	20/1	900			R	FURN SYSTEM WHIP
SPACE						39	40	20/1		900		R	FURN SYSTEM WHIP
SPACE						41	42				900	R	FURN SYSTEM WHIP
PHASE TOTALS:		8000	8000	7000	23000 =TOTAL CONNECTED LOAD,VA (FOR DEMAND LOAD SEE BELOW)								
PHASE AMPERES:		66.6	66.6	58.3									

*DEMAND LOAD CALCULATION:
L=LIGHTING LOADS: 1.25 X 0 = 0 VA
C=CONTINUOUS LOADS, OTHER: 1.25 X 0 = 0 VA
M=MOTOR LOADS (INCL LOST): 1.00 X 57771 = 57771 VA
LARGEST, VA: 0.25 X 21000 = 5250 VA
R=RECEPTACLES: 1ST 10K: 1.00 X 0 = 0 VA
BALANCE: 0.50 X 0 = 0 VA
K=KITCHEN LOADS: QTY: 0 1.00 X 0 = 0 VA
N=NONCONTINUOUS LOADS, OTHER: 1.00 X 30708 = 30708 VA
(P=PANEL, INCL. IN ABOVE)

NEW DEMAND LOAD = 121479 VA = 146.1 AMPERES
EXISTING LOAD VA X 1.25 = 0 VA = 0.0 AMPERES
TOTAL LOAD = 121479 VA = 146.1 AMPERES

NOTES:

PANEL 'LA3'

VOLTS: 120/208V | PHASE: 3 | MAIN: MLO
MOUNTING: SURFACE | WIRE: 4 | BUSSING: 225A

LOAD	*	A-VA	B-VA	C-VA	BKR	CT	CT	BKR	A-VA	B-VA	C-VA	*	LOAD
RECEPTACLES	R	900			20/1	1	2	20/1	900			R	RECEPTACLES
RECEPTACLES	R		900		20/1	3	4	20/1		900		R	RECEPTACLES
RECEPTACLES	R			900	20/1	5	6	20/1			900	R	RECEPTACLES
RECEPTACLES	R	900			20/1	7	8	20/1	900			R	RECEPTACLES
RECEPTACLES	R		900		20/1	9	10	20/1		900		R	RECEPTACLES
RECEPTACLES	N			900	20/1	11	12	20/1			900	R	RECEPTACLES
FURN SYSTEM WHIP	R	900			20/1	13	14	20/1	900			R	FURN SYSTEM WHIP
FURN SYSTEM WHIP	R		900		20/1	15	16	20/1		900		R	FURN SYSTEM WHIP
FURN SYSTEM WHIP	R			900	20/1	17	18	20/1			900	R	FURN SYSTEM WHIP
FURN SYSTEM WHIP	R	900			20/1	19	20	20/1	900			R	FURN SYSTEM WHIP
SPARE					20/1	21	22	20/1		1000		N	AUDIO VISUAL/PROJECTORS
SPARE					20/1	23	24	20/1			1000	N	AUDIO VISUAL/PROJECTORS
RECEPTACLES	R	1200			20/1	25	26	20/1	750			N	PRINTER
SPARE					20/1	27	28	20/1					SPARE
RECEPTACLES	R		1200		20/1	29	30	20/1			1000	N	AUDIO VISUAL/PROJECTORS
FURN SYSTEM WHIP	R	900			20/1	31	32	20/1	1000			N	AUDIO VISUAL/PROJECTORS
FURN SYSTEM WHIP	R		900		20/1	33	34	20/1		900		R	FURN SYSTEM WHIP
FURN SYSTEM WHIP	R			900	20/1	35	36	20/1			900	R	FURN SYSTEM WHIP
FURN SYSTEM WHIP	R	900			20/1	37	38	20/1	900			R	FURN SYSTEM WHIP
SPACE						39	40	20/1		900		R	FURN SYSTEM WHIP
SPACE						41	42				900	R	FURN SYSTEM WHIP
PHASE TOTALS:		12850	9850	10400	33100 =TOTAL CONNECTED LOAD,VA (FOR DEMAND LOAD SEE BELOW)								
PHASE AMPERES:		107.0	82.0	86.6									

*DEMAND LOAD CALCULATION:
L=LIGHTING LOADS: 1.25 X 0 = 0 VA
C=CONTINUOUS LOADS, OTHER: 1.25 X 0 = 0 VA
M=MOTOR LOADS (INCL LOST): 1.00 X 44120 = 44120 VA
LARGEST, VA: 0.25 X 6000 = 1500 VA
R=RECEPTACLES: 1ST 10K: 1.00 X 720 = 720 VA
BALANCE: 0.50 X 0 = 0 VA
K=KITCHEN LOADS: QTY: 0 1.00 X 0 = 0 VA
N=NONCONTINUOUS LOADS, OTHER: 1.00 X 550 = 550 VA
(P=PANEL, INCL. IN ABOVE)

NEW DEMAND LOAD = 46890 VA = 56.4 AMPERES
EXISTING LOAD VA X 1.25 = 0 VA = 0.0 AMPERES
TOTAL LOAD = 46890 VA = 56.4 AMPERES

NOTES:
a - HACR CIRCUIT BREAKER

PANEL 'LA4' SECTION 1

VOLTS: 120/208V | PHASE: 3 | MAIN: MLO
MOUNTING: SURFACE | WIRE: 4 | BUSSING: 225A

LOAD	*	A-VA	B-VA	C-VA	BKR	CT	CT	BKR	A-VA	B-VA	C-VA	*	LOAD
RECEPTACLES	R	900			20/1	1	2	20/1	900			R	RECEPTACLES
RECEPTACLES	R		900		20/1	3	4	20/1		900		R	RECEPTACLES
RECEPTACLES	R			900	20/1	5	6	20/1			900	R	RECEPTACLES
SPARE					20/1	7	8	20/1	900			R	RECEPTACLES
SPARE					20/1	9	10	20/1		900		R	RECEPTACLES
SPARE					20/1	11	12	20/1			900	R	RECEPTACLES
SPARE					20/1	13	14	20/1	900			R	RECEPTACLES
RECEPTACLES	R		1080		20/1	15	16	20/1		900		R	RECEPTACLES
RECEPTACLES	N			1080	20/1	17	18	20/1			900	N	RECEPTACLES
RECEPTACLES	R	1080			20/1	19	20	20/1	1000			N	AUDIO VISUAL/PROJECTORS
RECEPTACLES	R		900		20/1	21	22	20/1		1000		N	AUDIO VISUAL/PROJECTORS
RECEPTACLES	R			900	20/1	23	24				1000	N	AUDIO VISUAL/PROJECTORS
SPACE						25	26	60/3	3000			N	IDF ROOM -- STARLINE
SPACE						27	28	---		3000		N	----
FIRE ALARM NAP	N			250	20/1a	29	30	---			3000	N	----
RECEPTACLES	R	1080			20/1	31	32	20/1	400			N	AC UNIT RECEPTS/ CONTROL
TOWER CLOCK SYSTEM	N		450		20/1	33	34	20/1		400		N	AC UNIT RECEPTS/ CONTROL
AC UNIT AC-4 (INDOOR)	M			600	20/1	35	36						SPACE
SUB FEED LUGS -SECT 2	P					37	38						SPACE
SUB FEED LUGS -SECT 2	P					39	40						SPACE
SUB FEED LUGS -SECT 2	P					41	42						SPACE
PHASE TOTALS:		11060	10430	10430	31920 =TOTAL CONNECTED LOAD,VA (FOR DEMAND LOAD SEE BELOW)								
PHASE AMPERES:		92.1	86.8	86.8									

*DEMAND LOAD CALCULATION:
L=LIGHTING LOADS: 1.25 X 0 = 0 VA
C=CONTINUOUS LOADS, OTHER: 1.25 X 0 = 0 VA
M=MOTOR LOADS (INCL LOST): 1.00 X 600 = 600 VA
LARGEST, VA: 0.25 X 0 = 0 VA
R=RECEPTACLES: 1ST 10K: 1.00 X 10000 = 10000 VA
BALANCE: 0.50 X 24740 = 12370 VA
K=KITCHEN LOADS: QTY: 0 1.00 X 0 = 0 VA
N=NONCONTINUOUS LOADS, OTHER: 1.00 X 18180 = 18180 VA
(P=PANEL, INCL. IN ABOVE)

NEW DEMAND LOAD = 41150 VA = 114.2 AMPERES
EXISTING LOAD VA X 1.25 = 0 VA = 0.0 AMPERES
TOTAL LOAD = 41150 VA = 114.2 AMPERES

NOTES:
a. Provide lock-on type circuit breaker, paint red and lable "FIRE ALARM".

PANEL 'LA1A'

VOLTS: 120/208 | PHASE: 3 | MAIN: 100A MLO
MOUNTING: SURFACE | WIRE: 4 | BUSSING: 100A

LOAD	*	A-VA	B-VA	C-VA	BKR	CT	CT	BKR	A-VA	B-VA	C-VA	*	LOAD
RECEPTS ELECTR. FAUCETS	N	250			20/1	1	2	20/1a	400			N	POOL EQUIP. J-B.
ELEVATOR SUMP	M		300		20/1	3	4	20/1a		300		N	POOL EQUIP. J-B.
ELEVATOR SUMP	M			300	20/1	5	6	20/3a			500	M	FILTER PUMP
ELEVATOR SHUNT TRIP	N	100			20/1	7	8	---	500			M	----
SPACE						9	10	---		500		M	----
SPACE						11	12	20/1a			500	N	POOL EQUIP. J-B.
SPACE						13	14	20/1a	500			N	POOL EQUIP. J-B.
SPACE						15	16	20/1a		500		N	POOL EQUIP. J-B.
SPACE						17	18						SPACE
SPACE						19	20						SPACE
SPACE						21	22						SPACE
SPACE						23	24						SPACE
SPACE						25	26						SPACE
SPACE						27	28						SPACE
SPACE						29	30						SPACE
PHASE TOTALS:		1750	1600	1300	4650 =TOTAL CONNECTED LOAD,VA (FOR DEMAND LOAD SEE BELOW)								
PHASE AMPERES:		14.6	13.3	10.8									

*DEMAND LOAD CALCULATION:
L=LIGHTING LOADS: 1.25 X 0 = 0 VA
C=CONTINUOUS LOADS, OTHER: 1.25 X 0 = 0 VA
M=MOTOR LOADS (INCL LOST): 1.00 X 2100 = 2100 VA
LARGEST, VA: 0.25 X 0 = 0 VA
R=RECEPTACLES: 1ST 10K: 1.00 X 0 = 0 VA
BALANCE: 0.50 X 0 = 0 VA
K=KITCHEN LOADS: QTY: 0 1.00 X 0 = 0 VA
N=NONCONTINUOUS LOADS, OTHER: 1.00 X 2550 = 2550 VA
(P=PANEL, INCL. IN ABOVE)

NEW DEMAND LOAD = 4650 VA = 12.9 AMPERES
EXISTING LOAD VA X 1.25 = 0 VA = 0.0 AMPERES
TOTAL LOAD = 4650 VA = 12.9 AMPERES

NOTES:
a. Provide ground fault circuit breaker.

PANEL 'HA1'

VOLTS: 277/480V | PHASE: 3 | MAIN:MLO
MOUNTING: SURFACE | WIRE: 4 | BUSSING:225

LOAD	*	A-VA	B-VA	C-VA	BKR	CT	CT	BKR	A-VA	B-VA	C-VA	*	LOAD
LIGHTING 1ST FLOOR -- CC CONTR	L	2600			20/1	1	2	20/1	175			L	EXIT LIGHTING 1ST FLOOR
LIGHTING 1ST FLOOR -- CC CONTR	L		2400		20/1	3	4	20/1		1800		L	EXTERIOR LIGHTING
LIGHTING 1ST FLOOR -- CC CONTR	L			2200	20/1	5	6	20/1			1900	L	LIGHTING --MISC SPACES
LIGHTING 1ST FLOOR -- CC CONTR	L	2250			20/1	7	8						SPACE
LIGHTING 1ST FLOOR -- CC CONTR	L		2400		20/1	9	10						SPACE
LIGHTING 1ST FLOOR -- CC CONTR	L			2600	20/1	11	12						SPACE
LIGHTING 1ST FLOOR -- CC CONTR	L	2400			20/1	13	14						SPACE
LIGHTING 1ST FLOOR -- CC CONTR	L		2000		20/1	15	16						SPACE
LIGHTING 1ST FLOOR	L			2000	20/1	17	18						SPACE
SPACE						19	20						SPACE
SPACE						21	22						SPACE
SPACE						23	24						SPACE
SPACE						25	26						SPACE
SPACE						27	28						SPACE
SPACE						29	30						SPACE
PHASE TOTALS:		7425	8800	8700	24925 =TOTAL CONNECTED LOAD,VA (FOR DEMAND LOAD SEE BELOW)								
PHASE AMPERES:		26.8	31.0	31.4									

*DEMAND LOAD CALCULATION:
L=LIGHTING LOADS: 1.25 X 24725 = 30906 VA
C=CONTINUOUS LOADS, OTHER: 1.25 X 0 = 0 VA
M=MOTOR LOADS (INCL LOST): 1.00 X 0 = 0 VA
LARGEST, VA: 0.25 X 0 = 0 VA
R=RECEPTACLES: 1ST 10K: 1.00 X 0 = 0 VA
BALANCE: 0.50 X 0 = 0 VA
K=KITCHEN LOADS: QTY: 0 1.00 X 0 = 0 VA
N=NONCONTINUOUS LOADS, OTHER: 1.00 X 0 = 0 VA
(P=PANEL, INCL. IN ABOVE)

NEW DEMAND LOAD = 30906 VA = 37.2 AMPERES
EXISTING LOAD VA

PANEL 'HB1'

VOLTS: 277/480V — PHASE: 3 — MAIN: MLO
MOUNTING: SURFACE — WIRE: 4 — BUSSING: 225A

LOAD	*	A-VA	B-VA	C-VA	BKR	CT	CT	BKR	A-VA	B-VA	C-VA	*	LOAD
LIGHTING 1ST FLOOR	L	2500			20/1	1	2	20/1		200			L EXIT LTG 1ST FLOOR
LIGHTING 1ST FLOOR	L		2400		20/1	3	4	20/1			1800		L EXTERIOR LIGHTING
LIGHTING 1ST FLOOR	L			2200	20/1	5	6	20/1				2100	L LIGHTING
LIGHTING 1ST FLOOR	L	2500			20/1	7	8	–/1					SPACE ONLY
LIGHTING 1ST FLOOR	L		2200		20/1	9	10	–/1					SPACE ONLY
LIGHTING 1ST FLOOR	L			2400	20/1	11	12	–/1					SPACE ONLY
LIGHTING 1ST FLOOR	L	1800			20/1	13	14	–/1					SPACE ONLY
LIGHTING 1ST FLOOR	L		1200		20/1	15	16	–/1					SPACE ONLY
SPACE ONLY					–/1	17	18	–/1					SPACE ONLY
SPACE ONLY					–/1	19	20	–/1					SPACE ONLY
SPACE ONLY					–/1	21	22	20/1			2500		L PARKING LOT LIGHTING
SPACE ONLY					–/1	23	24	20/1				2500	L PARKING LOT LIGHTING
SPACE ONLY					–/1	25	26	20/1	2500				L PARKING LOT LIGHTING
SPACE ONLY					–/1	27	28	20/1		2500			L PARKING LOT LIGHTING
SPACE ONLY					–/1	29	30	20/1			2500		L PARKING LOT LIGHTING
SPACE ONLY					–/1	31	32	20/1	2500				L PARKING LOT LIGHTING
SPACE ONLY					–/1	33	34	20/1		2500			L LANDSCAPE LIGHTING
SPACE ONLY					–/1	35	36	–/1					SPACE ONLY
SPACE ONLY					–/1	37	38	–/1					SPACE ONLY
SPACE ONLY					–/1	39	40	–/1					SPACE ONLY
SPACE ONLY					–/1	41	42	–/1					SPACE ONLY
PHASE TOTALS:		12000	15100	11700				38800	=TOTAL CONNECTED LOAD,VA (FOR DEMAND LOAD SEE BELOW)				
PHASE AMPERES:		43.3	54.5	42.2									

NOTES:

*DEMAND LOAD CALCULATION:

L=LIGHTING LOADS:	1.25	X	38800	=	48500 VA
C=CONTINUOUS LOADS, OTHER:	1.25	X	0	=	0 VA
M=MOTOR LOADS (INCL. LOST):	1.00	X	0	=	0 VA
LARGEST, VA:	0.25	X	0	=	0 VA
R=RECEPTACLES: 1ST 10K:	1.00	X	0	=	0 VA
BALANCE:	0.50	X	0	=	0 VA
K=KITCHEN LOADS: QTY: 0	1.00	X	0	=	0 VA
N=NONCONTINUOUS LOADS, OTHER:	1.00	X	0	=	0 VA
(P=PANEL, INCL. IN ABOVE)					
NEW DEMAND LOAD				=	48500 VA = 58.3 AMPERES
EXISTING LOAD VA		X	1.25	=	0 VA = 0.0 AMPERES
TOTAL LOAD				=	48500 VA = 58.3 AMPERES

PANEL 'LB1'

VOLTS: 120/208V — PHASE: 3 — MAIN: MLO
MOUNTING: SURFACE — WIRE: 4 — BUSSING: 225A

LOAD	*	A-VA	B-VA	C-VA	BKR	CT	CT	BKR	A-VA	B-VA	C-VA	*	LOAD
RECEPTACLES	R	1080			20/1	1	2	20/1	900			R	RECEPTACLES
RECEPTACLES	R		1080		20/1	3	4	20/1		900		R	RECEPTACLES
RECEPTACLES	R			1080	20/1	5	6	20/1			900	R	RECEPTACLES
RECEPTACLES	R	1080			20/1	7	8	20/1	900			R	RECEPTACLES
RECEPTACLES	R		1080		20/1	9	10	20/1		900		R	RECEPTACLES
RECEPTACLES	R			1080	20/1	11	12	20/1			900	R	RECEPTACLES
RECEPTACLES	R	900			20/1	13	14	20/1	900			R	RECEPTACLES
RECEPTACLES	R		900		20/1	15	16	20/1		900		R	RECEPTACLES
RECEPTACLES	R			900	20/1	17	18	20/1			900	R	RECEPTACLES
RECEPTACLES	R	900			20/1	19	20	20/1	800			N	KITCHEN – REFR
RECEPTACLES	R		900		20/1	21	22	20/1		1000		N	KITCHEN – MICRO
RECEPTACLES	R			900	20/1	23	24	20/1			1200	N	KITCHEN – DISPOSER
COPIER	N	1000			20/1	25	26	20/1	1200				
PRINTER	N		800		20/1	27	28	20/1		1200			
DOOR CONTROL	N			300	20/1	29	30	20/1			1200	R	RECEPTACLES
RECEPTACLES	R	1080			20/1	31	32	20/1	1200			R	RECEPTACLES
RECEPTACLES	R		1080		20/1	33	34	20/1		1200		R	RECEPTACLES
RECEPTACLES	R			1080	20/1	35	36	20/1			1000	N	AUDIO VISUAL/PROJECTOR
PRINTER	N	800			20/1	37	38						SPACE
COPIER	N		1000		20/1	39	40						SPACE
SHUNT TRIP CKT	N			100	15/1	41	42						SPACE
PHASE TOTALS:		12740	12940	11540				37220	=TOTAL CONNECTED LOAD,VA (FOR DEMAND LOAD SEE BELOW)				
PHASE AMPERES:		106.1	107.8	96.1									

NOTES:

*DEMAND LOAD CALCULATION:

L=LIGHTING LOADS:	1.25	X	0	=	0 VA
C=CONTINUOUS LOADS, OTHER:	1.25	X	0	=	0 VA
M=MOTOR LOADS (INCL. LOST):	1.00	X	0	=	0 VA
LARGEST, VA:	0.25	X	0	=	0 VA
R=RECEPTACLES: 1ST 10K:	1.00	X	10000	=	10000 VA
BALANCE:	0.50	X	19220	=	9610 VA
K=KITCHEN LOADS: QTY: 0	1.00	X	0	=	0 VA
N=NONCONTINUOUS LOADS, OTHER:	1.00	X	8000	=	8000 VA
(P=PANEL, INCL. IN ABOVE)					
NEW DEMAND LOAD				=	27610 VA = 76.6 AMPERES
EXISTING LOAD VA		X	1.25	=	0 VA = 0.0 AMPERES
TOTAL LOAD				=	27610 VA = 76.6 AMPERES

PANEL 'LB2'

VOLTS: 120/208V — PHASE: 3 — MAIN: MLO
MOUNTING: SURFACE — WIRE: 4 — BUSSING: 225A

LOAD	*	A-VA	B-VA	C-VA	BKR	CT	CT	BKR	A-VA	B-VA	C-VA	*	LOAD
RECEPTACLES	R	1200			20/1	1	2	20/1	1200			R	RECEPTACLES
RECEPTACLES	R		1200		20/1	3	4	20/1		1200		R	RECEPTACLES
RECEPTACLES	R			1200	20/1	5	6	20/1			360	R	RECEPTACLES
FIRE ALARM MAP	N	250			20/1a	7	8	20/1	1440			R	FURNITURE SYSTEM WHIPS
AUTO TEMP CONTROLS	N		300		20/1	9	10	20/1		1440		R	FURNITURE SYSTEM WHIPS
SPACE						11	12	20/1			1440	R	FURNITURE SYSTEM WHIPS
SPACE						13	14	20/1	1440			R	FURNITURE SYSTEM WHIPS
SPACE						15	16						SPACE
SPACE						17	18						SPACE
SPACE						19	20						SPACE
SPACE						21	22						SPACE
SPACE						23	24						SPACE
SPACE						25	26						SPACE
SPACE						27	28						SPACE
SPACE						29	30						SPACE
SPACE						31	32						SPACE
SPACE						33	34						SPACE
SPACE						35	36						SPACE
SPACE						37	38						SPACE
SPACE						39	40						SPACE
SPACE						41	42						SPACE
PHASE TOTALS:		5530	4140	3000				12670	=TOTAL CONNECTED LOAD,VA (FOR DEMAND LOAD SEE BELOW)				
PHASE AMPERES:		46.0	34.5	25.0									

NOTES:
a. Provide lock-on type circuit breaker, paint red and lable "FIRE ALARM".

*DEMAND LOAD CALCULATION:

L=LIGHTING LOADS:	1.25	X	0	=	0 VA
C=CONTINUOUS LOADS, OTHER:	1.25	X	0	=	0 VA
M=MOTOR LOADS (INCL. LOST):	1.00	X	0	=	0 VA
LARGEST, VA:	0.25	X	0	=	0 VA
R=RECEPTACLES: 1ST 10K:	1.00	X	10000	=	10000 VA
BALANCE:	0.50	X	2120	=	1060 VA
K=KITCHEN LOADS: QTY: 0	1.00	X	0	=	0 VA
N=NONCONTINUOUS LOADS, OTHER:	1.00	X	550	=	550 VA
(P=PANEL, INCL. IN ABOVE)					
NEW DEMAND LOAD				=	11610 VA = 32.2 AMPERES
EXISTING LOAD VA		X	1.25	=	0 VA = 0.0 AMPERES
TOTAL LOAD				=	11610 VA = 32.2 AMPERES

PANEL 'LB3'

VOLTS: 120/208V — PHASE: 3 — MAIN: MLO
MOUNTING: SURFACE — WIRE: 4 — BUSSING: 225A

LOAD	*	A-VA	B-VA	C-VA	BKR	CT	CT	BKR	A-VA	B-VA	C-VA	*	LOAD
AUDIO VISUAL EQUIP.	N	1000			20/1	1	2	20/1	1080			R	RECEPTACLES
SPARE	R				20/1	3	4	20/1		1080		R	RECEPTACLES
RECEPTACLES	R		1080		20/1	5	6	20/1			1080	R	RECEPTACLES
AUDIO VISUAL EQUIP.	N	1000			20/1	7	8	20/1	900			R	RECEPTACLES
RECEPTACLES	R		900		20/1	9	10	20/1		900		R	RECEPTACLES
RECEPTACLES	R			900	20/1	11	12	20/1			900	R	RECEPTACLES
RECEPTACLES	R	900			20/1	13	14	20/1	900			R	RECEPTACLES
RECEPTACLES	R		900		20/1	15	16	20/1		900		R	RECEPTACLES
RECEPTACLES	R			900	20/1	17	18	20/1			450	L	ELEV PIT LIGHT , RECEPT
ELEV. EQUIP. RM RECEPT.	R	360			20/1	19	20	60/3	3000			N	EF ROOM –STARLINE
SPARE	R		1200		20/1	21	22	---		3000		N	---
SPARE	R			1200	20/1	23	24	---			3000	N	---
RECEPTACLES	R	1080			20/1	25	26	20/1	200			M	FIRE SMOKE DAMPERS
PRINTER/FAX/SCAN	N		950		20/1	27	28	20/1		900		R	FURN SYSTEM WHIPS
COPIER	N			1000	20/1	29	30	20/1			900	R	FURN SYSTEM WHIPS
DOOR CONTROLLER	N	500			20/1	31	32	20/1	900			R	FURN SYSTEM WHIPS
FUT STACK LTG	L		900		20/1	33	34	20/1		900		R	FURN SYSTEM WHIPS
FUT STACK LTG	L			900	20/1	35	36						SPACE ONLY
PANEL 'LB3A'	P	3330			60/3	37	38						SPACE ONLY
---	P		1485		---	39	40						SPACE ONLY
---	P			1285	---	41	42						SPACE ONLY
PHASE TOTALS:		15150	14015	13595				42760	=TOTAL CONNECTED LOAD,VA (FOR DEMAND LOAD SEE BELOW)				
PHASE AMPERES:		126.2	116.7	113.2									

NOTES:

*DEMAND LOAD CALCULATION:

L=LIGHTING LOADS:	1.25	X	2250	=	2813 VA
C=CONTINUOUS LOADS, OTHER:	1.25	X	0	=	0 VA
M=MOTOR LOADS (INCL. LOST):	1.00	X	5140	=	5140 VA
LARGEST, VA:	0.25	X	0	=	0 VA
R=RECEPTACLES: 1ST 10K:	1.00	X	10000	=	10000 VA
BALANCE:	0.50	X	9520	=	4760 VA
K=KITCHEN LOADS: QTY: 0	1.00	X	0	=	0 VA
N=NONCONTINUOUS LOADS, OTHER:	1.00	X	15850	=	15850 VA
(P=PANEL, INCL. IN ABOVE)					
NEW DEMAND LOAD				=	38563 VA = 107.0 AMPERES
EXISTING LOAD VA		X	1.25	=	0 VA = 0.0 AMPERES
TOTAL LOAD				=	38563 VA = 107.0 AMPERES

PANEL 'HB2'

VOLTS: 277/480V — PHASE: 3 — MAIN: MLO
MOUNTING: SURFACE — WIRE: 4 — BUSSING: 225A

LOAD	*	A-VA	B-VA	C-VA	BKR	CT	CT	BKR	A-VA	B-VA	C-VA	*	LOAD
AIR HANDLER AHU3	M	10800			60/3	1	2	15/3	720			M	EXHAUST FAN EF-1
---	M		10800		---	3	4	---		720		M	---
---	M			10800	---	5	6	---			720	M	---
AIR HANDLER AHU4	M	6260			40/3	7	8	20/3	2100			M	AIR HANDLER AHU-7
---	M		6260		---	9	10	---		2100		M	---
---	M			6260	---	11	12	---			2100	M	---
AIR HANDLER AHU5	M	7950			50/3	13	14	–/1					SPACE ONLY
---	M		7950		---	15	16	–/1					SPACE ONLY
---	M			7950	---	17	18	–/1					SPACE ONLY
SPACE ONLY					–/1	19	20	–/1					SPACE ONLY
SPACE ONLY					–/1	21	22	–/1					SPACE ONLY
SPACE ONLY					–/1	23	24	–/1					SPACE ONLY
SPACE ONLY					–/1	25	26	–/1					SPACE ONLY
SPACE ONLY					–/1	27	28	–/1					SPACE ONLY
SPACE ONLY					–/1	29	30	–/1					SPACE ONLY
PHASE TOTALS:		27630	27630	27630				82890	=TOTAL CONNECTED LOAD,VA (FOR DEMAND LOAD SEE BELOW)				
PHASE AMPERES:		99.7	99.7	99.7									

NOTES:

*DEMAND LOAD CALCULATION:

L=LIGHTING LOADS:	1.25	X	0	=	0 VA
C=CONTINUOUS LOADS, OTHER:	1.25	X	0	=	0 VA
M=MOTOR LOADS (INCL. LOST):	1.00	X	82890	=	82890 VA
LARGEST, VA:	0.25	X	22000	=	5500 VA
R=RECEPTACLES: 1ST 10K:	1.00	X	0	=	0 VA
BALANCE:	0.50	X	0	=	0 VA
K=KITCHEN LOADS: QTY: 0	1.00	X	0	=	0 VA
N=NONCONTINUOUS LOADS, OTHER:	1.00	X	0	=	0 VA
(P=PANEL, INCL. IN ABOVE)					
NEW DEMAND LOAD				=	88390 VA = 106.3 AMPERES
EXISTING LOAD VA		X	1.25	=	0 VA = 0.0 AMPERES
TOTAL LOAD				=	88390 VA = 106.3 AMPERES

PANEL 'LB4' (SECTION 1)

VOLTS: 120/208V — PHASE: 3 — MAIN: MLO
MOUNTING: SURFACE — WIRE: 4 — BUSSING: 225A

LOAD	*	A-VA	B-VA	C-VA	BKR	CT	CT	BKR	A-VA	B-VA	C-VA	*	LOAD
RECEPTACLES	R	1200			20/1	1	2	20/1	900			R	RECEPTACLES
RECEPTACLES	R		1200		20/1	3	4	20/1		900		R	RECEPTACLES
RECEPTACLES	R			1200	20/1	5	6	20/1			900	R	RECEPTACLES
AUDIO VISUAL/PROJECTOR	N	1000			20/1	7	8	20/1	1000			N	AUDIO VISUAL/PROJECTORS
AUDIO VISUAL/PROJECTOR	N		1000		20/1	9	10	20/1		1000		N	AUDIO VISUAL/PROJECTORS
AUDIO VISUAL/PROJECTOR	N			1000	20/1	11	12	20/1			1000	N	AUDIO VISUAL/PROJECTORS
PROJECTOR SCREENS	N	400			20/1	13	14	20/1	1000			N	AUDIO VISUAL/PROJECTORS
RECEPTACLES	R		1200		20/1	15	16	20/1		1000		N	AUDIO VISUAL/PROJECTORS
RECEPTACLES	R			1200	20/1	17	18	20/1			1000	N	AUDIO VISUAL/PROJECTORS
FURN SYSTEM WHIPS	R	1080			20/1	19	20	20/1	1200			N	AV RACK
FURN SYSTEM WHIPS	R		1080		20/1	21	22	20/1		1200		R	RECEPTACLES
FURN SYSTEM WHIPS	R			1080	20/1	23	24	20/1			1200	R	RECEPTACLES
FURN SYSTEM WHIPS	R	1080			20/1	25	26	20/1	400			N	HVAC RECPT., CONTROL
SPARE	R				20/1	27	28	20/1			400	N	HVAC RECPT., CONTROL
RECEPTACLES	R			1200	20/1	29	30	20/1			400	N	HVAC RECPT., CONTROL
FIRE ALARM MAP	N	250			20/1a	31	32	20/1	1200			N	AV RACK
FIRE SMOKE DAMPERS	N		200		20/1	33	34	20/1					SPARE
SPARE					20/1	35	36	20/1					SPARE
SUBFEED SECT 2	P	3600			---	37	38	–/1					SPACE ONLY
---	P		1800		---	39	40	–/1					SPACE ONLY
---	P			1800	---	41	42	–/1					SPACE ONLY
PHASE TOTALS:		14310	10980	11980				37270	=TOTAL CONNECTED LOAD,VA (FOR DEMAND LOAD SEE BELOW)				
PHASE AMPERES:		119.2	91.4	99.8									

NOTES:
Provide sub feed lugs to section 2
a. Provide lock-on type circuit breaker, paint red and label "FIRE ALARM.

*DEMAND LOAD CALCULATION:

L=LIGHTING LOADS:	1.25	X	0	=	0 VA
C=CONTINUOUS LOADS, OTHER:	1.25	X	0	=	0 VA
M=MOTOR LOADS (INCL. LOST):	1.00	X	0	=	0 VA
LARGEST, VA:	0.25	X	0	=	0 VA
R=RECEPTACLES: 1ST 10K:	1.00	X	10000	=	10000 VA
BALANCE:	0.50	X	13820	=	6910 VA
K=KITCHEN LOADS: QTY: 0	1.00	X	0	=	0 VA
N=NONCONTINUOUS LOADS, OTHER:	1.00	X	13450	=	13450 VA
(P=PANEL, INCL. IN ABOVE)					
NEW DEMAND LOAD				=	30360 VA = 84.3 AMPERES
EXISTING LOAD VA		X	1.25	=	0 VA = 0.0 AMPERES
TOTAL LOAD				=	30360 VA = 84.3 AMPERES

PANEL 'LB4' (SECTION 2)

VOLTS: 120/208V — PHASE: 3 — MAIN:MLO
MOUNTING: SURFACE — WIRE: 4 — BUSSING: 225A

LOAD	*	A-VA	B-VA	C-VA	BKR	CT	CT	BKR	A-VA	B-VA	C-VA	*	LOAD
FURN. SYSTEM WHIPS	R	900			20/1	43	44	20/1	900			R	FURN. SYSTEM WHIPS
FURN. SYSTEM WHIPS	R		900		20/1	45	46	20/1		900		R	FURN. SYSTEM WHIPS
FURN. SYSTEM WHIPS	R			900	20/1	47	48	20/1			900	R	FURN. SYSTEM WHIPS
FURN. SYSTEM WHIPS	R	900			20/1	49	50	20/1	900			R	FURN. SYSTEM WHIPS
SPACE					–/1	51	52	–/1					SPACE
SPACE					–/1	53	54	–/1					SPACE
SPACE					–/1	55	56	–/1					SPACE
SPACE					–/1	57	58	–/1					SPACE
SPACE					–/1	59	60	–/1					SPACE
SPACE					–/1	61	62	–/1					SPACE
SPACE					–/1	63	64	–/1					SPACE
SPACE					–/1	65	66	–/1					SPACE
SPACE					–/1	67	68	–/1					SPACE
SPACE					–/1	69	70	–/1					SPACE
SPACE					–/1	71	72	–/1					SPACE
SPACE					–/1	73	74	–/1					SPACE
SPACE					–/1	75	76	–/1					SPACE
SPACE					–/1	77	78	–/1					SPACE
SPACE					–/1	79	80	–/1					SPACE
SPACE					–/1	81	82	–/1					SPACE
SPACE					–/1	83	84	–/1					SPACE
PHASE TOTALS:		3600	1800	1800				7200	=TOTAL CONNECTED LOAD,VA (FOR DEMAND LOAD SEE BELOW)				
PHASE AMPERES:		30.0	15.0	15.0									

NOTES:

*DEMAND LOAD CALCULATION:

L=LIGHTING LOADS:	1.25	X	0	=	0 VA
C=CONTINUOUS LOADS, OTHER:	1.25	X	0	=	0 VA
M=MOTOR LOADS (INCL. LOST):	1.00	X	0	=	0 VA
LARGEST, VA:	0.25	X	0	=	0 VA
R=RECEPTACLES: 1ST 10K:	1.00	X	7200	=	7200 VA
BALANCE:	0.50	X	0	=	0 VA
K=KITCHEN LOADS: QTY: 0	1.00	X	0	=	0 VA
N=NONCONTINUOUS LOADS, OTHER:	1.00	X	0	=	0 VA
(P=PANEL, INCL. IN ABOVE)					
NEW DEMAND LOAD				=	7200 VA = 20.0 AMPERES
EXISTING LOAD VA		X	1.25	=	0 VA = 0.0 AMPERES
TOTAL LOAD				=	7200 VA = 20.0 AMPERES

PANEL 'LB5'

VOLTS: 120/208V — PHASE: 3 — MAIN: MLO
MOUNTING: SURFACE — WIRE: 4 — BUSSING: 225A

LOAD	*	A-VA	B-VA	C-VA	BKR	CT	CT	BKR	A-VA	B-VA	C-VA	*	LOAD
EF ROOM – STARLINE	N	3000			60/3	1	2	15/1	600				ACI-4 INDOOR UNIT
---	N		3000		---	3	4	–/1					SPACE ONLY
---	N			3000	---	5	6	–/1					SPACE ONLY
RECEPTACLES	R	1080			20/1	7	8	–/1					SPACE ONLY
RECEPTACLES	R		1080		20/1	9	10	–/1					SPACE ONLY
RECEPTACLES	R			1080	20/1	11	12	–/1					SPACE ONLY
RECEPTACLES	R	1080			20/1	13	14	–/1					SPACE ONLY
RECEPTACLES	R		1080		20/1	15	16	–/1					SPACE ONLY
RECEPTACLES	R			1080	20/1	17	18	–/1					SPACE ONLY
RECEPTACLES	R	1200			20/1	19	20	–/1					SPACE ONLY
RECEPTACLES	R		1200		20/1	21	22	–/1					SPACE ONLY
PROJECTOR	N			800	20/1	23	24	–/1					SPACE ONLY
RECEPTACLES	R	1600			20/1	25	26	–/1					SPACE ONLY
RECEPTACLES	R		1600		20/1	27	28	–/1					SPACE ONLY
SPACE ONLY					–/1	29	30	–/1					SPACE ONLY
SPACE ONLY					–/1	31	32	–/1					SPACE ONLY
SPACE ONLY					–/1	33	34	–/1					SPACE ONLY
SPACE ONLY					–/1	35	36	–/1					SPACE ONLY
SPACE ONLY					–/1	37	38	–/1					SPACE ONLY
SPACE ONLY					–/1	39	40	–/1					SPACE ONLY
SPACE ONLY					–/1	41	42	–/1					SPACE ONLY
PHASE TOTALS:		8560	7960	5960				22480	=TOTAL CONNECTED LOAD,VA (FOR DEMAND LOAD SEE BELOW)				
PHASE AMPERES:		71.3	66.3	49.6									

NOTES:

*DEMAND LOAD CALCULATION:

L=LIGHTING LOADS:	1.25	X	0	=	0 VA
C=CONTINUOUS LOADS, OTHER:	1.25	X	0	=	0 VA
M=MOTOR LOADS (INCL. LOST):	1.00	X	600	=	600 VA
LARGEST, VA:	0.25	X	600	=	150 VA
R=RECEPTACLES: 1ST 10K:	1.00	X	10000	=	10000 VA
BALANCE:	0.50	X	2080	=	1040 VA
K=KITCHEN LOADS: QTY: 0	1.00	X	0	=	0 VA
N=NONCONTINUOUS LOADS, OTHER:	1.00	X	9800	=	9800 VA
(P=PANEL, INCL. IN ABOVE)					
NEW DEMAND LOAD				=	21590 VA = 59.9 AMPERES
EXISTING LOAD VA		X	1.25	=	0 VA = 0.0 AMPERES
TOTAL LOAD				=	21590 VA = 59.9 AMPERES

PANEL 'HB3'

VOLTS: 277/480V — PHASE: 3 — MAIN:MLO
MOUNTING: SURFACE — WIRE: 4 — BUSSING:225A

LOAD	*	A-VA	B-VA	C-VA	BKR	CT	CT	BKR	A-VA	B-VA	C-VA	*	LOAD
LIGHTING 2ND FLOOR	L	1800			20/1	1	2	20/1		400			L EXIT LTG 2ND FLOOR
LIGHTING 2ND FLOOR	L		2800		20/1	3	4	20/1			1200		L CORRIDOR LIGHTING
LIGHTING 2ND FLOOR	L			2400	20/1	5	6	20/1				1700	L LIGHTING – EXTERIOR/ATTIC
LIGHTING 2ND FLOOR	L	2300			20/1	7	8	–/1					SPACE ONLY
LIGHTING 2ND FLOOR	L		1300		20/1	9	10	–/1					SPACE ONLY
LIGHTING 2ND FLOOR	L			1900	20/1	11	12	–/1					SPACE ONLY
LIGHTING 2ND FLOOR LIBR.	L	1700			20/1	13	14	–/1					SPACE ONLY
LIGHTING 2ND FLOOR LIBR.			1200		20/1	15	16	–/1					SPACE ONLY
SPACE ONLY					–/1	17	18	–/1					SPACE ONLY
SPACE ONLY					–/1	19	20	–/1					SPACE ONLY
SPACE ONLY					–/1	21	22	–/1					SPACE ONLY
SPACE ONLY					–/1	23	24	–/1					SPACE ONLY
SPACE ONLY					–/1	25	26	–/1					SPACE ONLY
SPACE ONLY					–/1	27	28	–/1					SPACE ONLY
SPACE ONLY					–/1	29	30	–/1					SPACE ONLY
PHASE TOTALS:		6000	6300	6000				18500	=TOTAL CONNECTED LOAD,VA (FOR DEMAND LOAD SEE BELOW)				
PHASE AMPERES:		22.4	22.7	21.7									

NOTES:

*DEMAND LOAD CALCULATION:

L=LIGHTING LOADS:	1.25	X	17300	=	21625 VA
C=CONTINUOUS LOADS, OTH

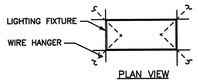

SEE ARCHITECTURAL DRAWING 5.01, DETAILS 5 AND 6 FOR WIRE CONNECTION

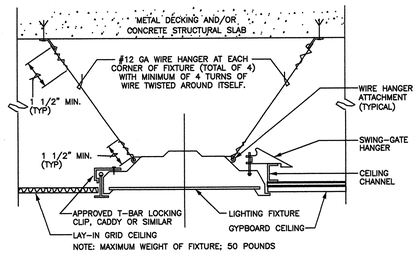

NOTE: MAXIMUM WEIGHT OF FIXTURE; 50 POUNDS

A 4.01 TYPICAL RECESSED FLUORESCENT FIXTURE MOUNTING DETAIL

NOT TO SCALE

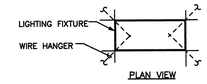

SEE ARCHITECTURAL DRAWING 5.01, DETAILS 5 AND 6 FOR WIRE CONNECTION

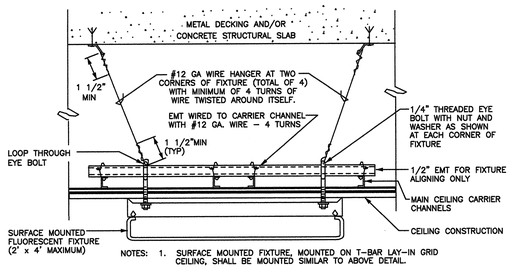

NOTES:
1. SURFACE MOUNTED FIXTURE, MOUNTED ON T-BAR LAY-IN GRID CEILING, SHALL BE MOUNTED SIMILAR TO ABOVE DETAIL.
2. MAXIMUM WEIGHT OF FIXTURE; 50 POUNDS

B 4.01 SURFACE MOUNTED FLUORESCENT FIXTURE HANGING DETAIL

NOT TO SCALE

SEE ARCHITECTURAL DRAWING 5.01, DETAILS 5 AND 6 FOR WIRE CONNECTION

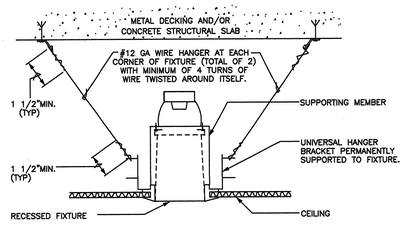

NOTE: MAXIMUM WEIGHT OF FIXTURE; 50 POUNDS

C 4.01 TYPICAL RECESSED INCANDESCENT, H.I.D. OR COMPACT FLUORESCENT MOUNTING DETAIL

NOT TO SCALE

SEE ARCHITECTURAL DRAWING 5.01, DETAILS 5 AND 6 FOR WIRE CONNECTION

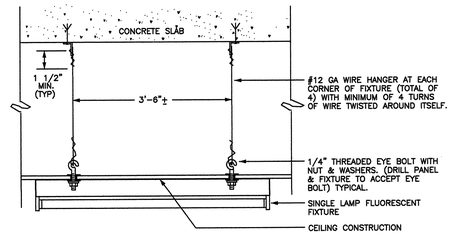

NOTE: MAXIMUM WEIGHT OF FIXTURE; 50 POUNDS

D 4.01 SURFACE MOUNTED FLUORESCENT FIXTURE HANGING DETAIL - SINGLE LAMP

NOT TO SCALE

SEE ARCHITECTURAL DRAWING 5.01, DETAILS 5 AND 6 FOR WIRE CONNECTION

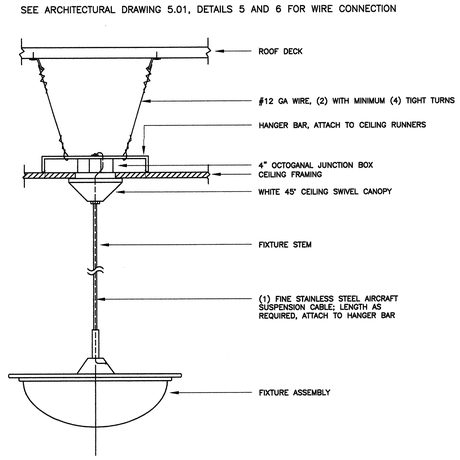

NOTE: MAXIMUM WEIGHT OF FIXTURE; 50LBS

E 4.01 DETAIL PENDANT MOUNTED FIXTURE

NOT TO SCALE

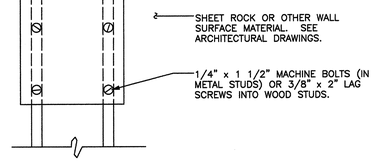

NOTES:
1. USE COMPRESSION WASHERS ON ALL BOLTS.
2. MAXIMUM PANELBOARD WEIGHT; 150 POUNDS .

F 4.01 SURFACE MOUNTED PANELBOARD INSTALLATION DETAIL

NOT TO SCALE

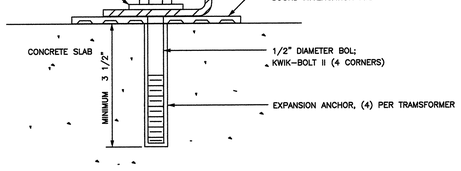

SEE DRAWING S1.01 FOR EXPANSION ANCHORING

G 4.01 TRANSFORMER MOUNTING DETAIL

NOT TO SCALE

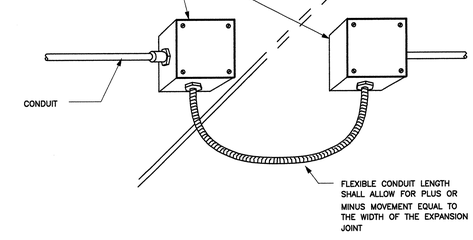

H 4.01 DETAIL OF CONDUIT CROSSING AT EXPANSION JOINT

NOT TO SCALE

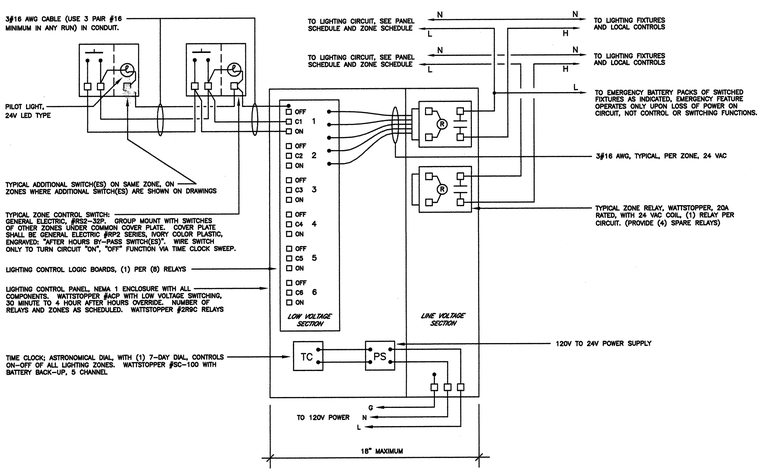

I 4.01 LIGHTING CONTROL DIAGRAM

NOT TO SCALE

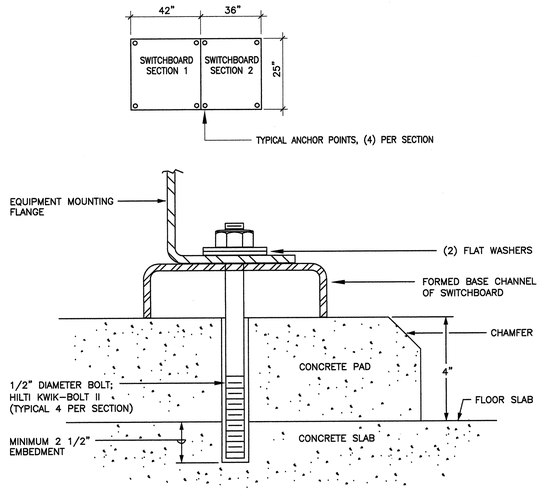

J 4.01 SWITCHBOARD MOUNTING DETAIL

NOT TO SCALE

SQUARE D QED

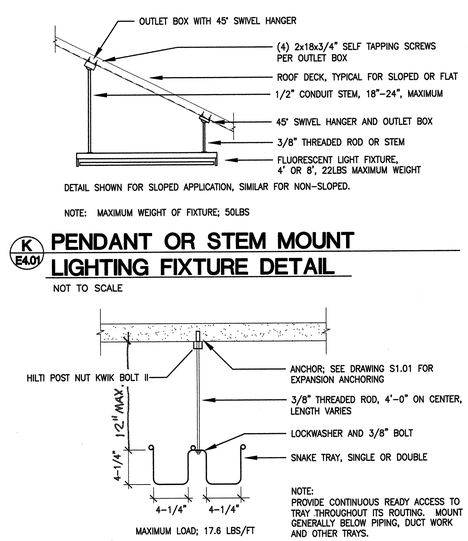

DETAIL SHOWN FOR SLOPED APPLICATION, SIMILAR FOR NON-SLOPED.

NOTE: MAXIMUM WEIGHT OF FIXTURE; 50LBS

K E4.01 PENDANT OR STEM MOUNT LIGHTING FIXTURE DETAIL

NOT TO SCALE

MAXIMUM LOAD; 17.6 LBS/FT

NOTE:
PROVIDE CONTINUOUS READY ACCESS TO TRAY THROUGHOUT ITS ROUTING. MOUNT GENERALLY BELOW PIPING, DUCT WORK AND OTHER TRAYS.

L E4.01 SNAKE TRAY SUPPORT

NOT TO SCALE

IF ARCHITECTURALLY DESIGNED TO DELAY PAINT 1/20.00

195

tBP architecture planning interiors management
tBP/Architecture
1000 Burnett Ave, Suite 140
Concord, CA 94520
ph: 9252466419 fx: 9252466495
architect

CONSULTING ENGINEERS
282 Second Street, 3rd Floor
San Francisco, CA 94105
FAX (415) 247-8711
twfs@pacbell.net
TOFT WOLFF FARROW Inc.
consultant

TWF #03007.00

DEPARTMENT STAMP
DEPARTMENT OF THE STATE ARCHITECT
DIV. OF REGULATION SERVICES
APPL. NO. 1C0719
DATE 4-15-04

agency

SAN RAMON VALLEY CENTER
CONTRA COSTA COMMUNITY COLLEGE DISTRICT
SAN RAMON, CALIFORNIA

owner

tBP project number : 20212.00
file name: .
drawn by: ABC checked by:
date: 03-04-04 plot scale: 1:1

Rev.	date:	description:
1	03-09-04	DSA BACKCHECK

drawing title: ELECTRICAL DETAILS
building no: .
drawing no: E4.01
drawing . of

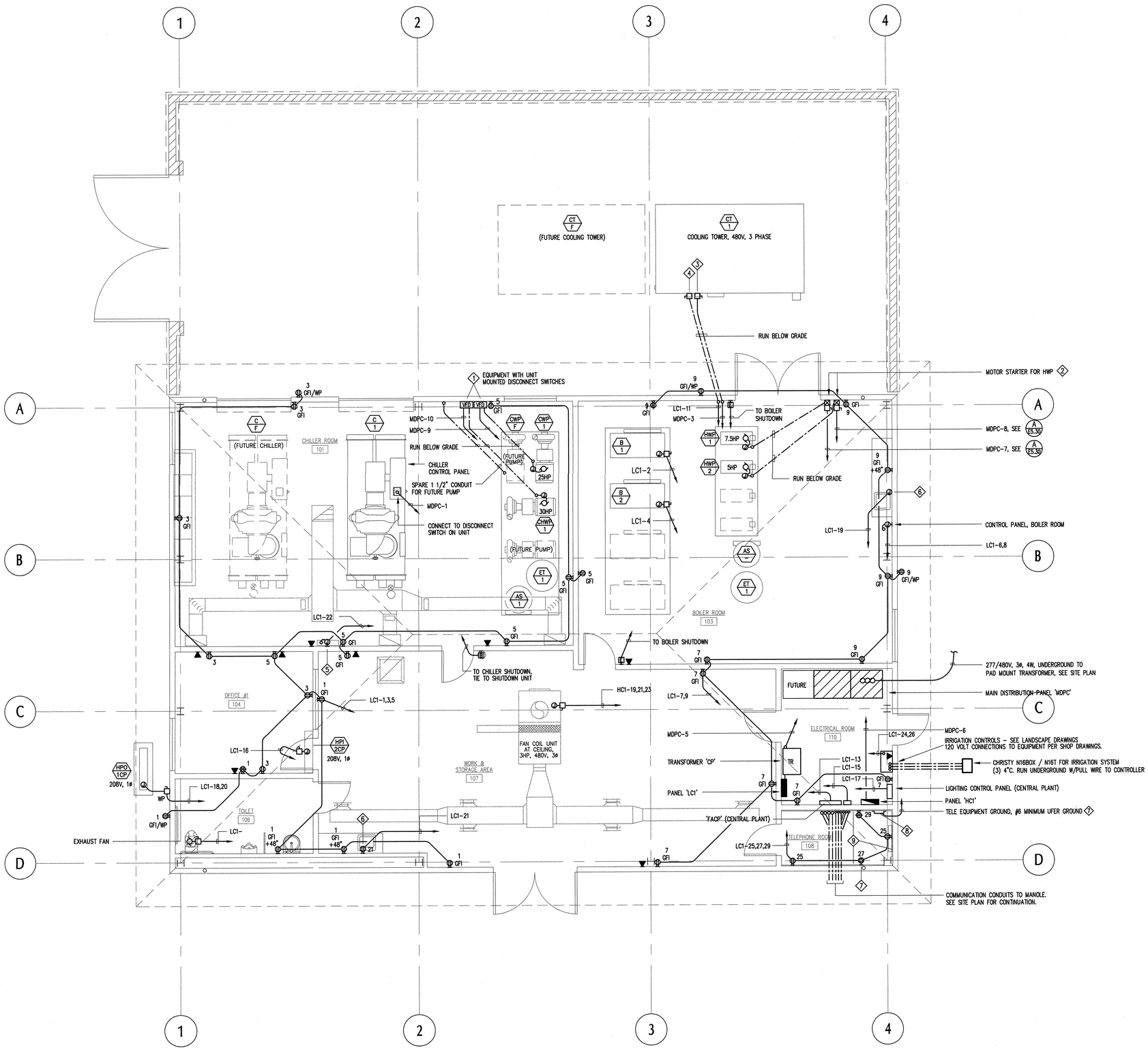

CENTRAL PLANT PLAN - POWER/SIGNAL
SCALE: 1/4" = 1'-0"

1

0 4' 8' 16' 32'

north

SHEET NOTES

1. VFD DRIVES FOR 'CHWP' AND 'CWP'; PROVIDED BY DIVISION 5, INSTALLED AND WIRED PER MANUFACTURERS SHOP DRAWINGS UNDER DIVISION 16.
2. COMBINATION DISCONNECT SWITCH AND MOTOR STARTER FOR 'HWP1' AND 'HWP2'; NEMA 12, 480V, 3ø.
3. DISCONNECT SWITCH FOR COOLING TOWER NEMA 3R 480 VOLT 3 PHASE 60 AMP NON-FUSED.
4. DISCONNECT SWITCH FOR COOLING TOWER CONTROL NEMA 3R 120 VOLT 1 PHASE 30 AMP NON-FUSED.
5. COORDINATE STUB UPS OF MOTORS WITH FINAL MECHANICAL DRAWINGS.
6. OUTLET BELOW SINK FOR HOT WATER HEATER, 1500W, 120V.
7. NEMA L-20R RECEPTACLE - 18" ABOVE FLOOR.
8. 20"X4" X 1/4" COPPER GROUND BAR FOR COMMUNICATION GROUNDING.
9. FIRE RATED 3/4" PLYWOOD BACKBOARD FROM FLOOR TO 8'

KEY PLAN

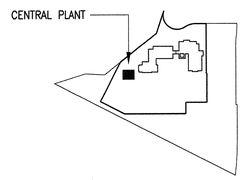

tBP
architecture
planning
interiors
management
tBP/Architecture
1000 Burnett Ave, Suite 140
Concord, CA 94520
ph: 925.246.6419 fx: 925.246.6495
architect

CONSULTING ENGINEERS
282 Second Street, 4th Floor
San Francisco, CA 94105
TEL (415) 247-8700
FAX (415) 247-8701
twfet@pacbell.net
TOFFT WOLFF FARROW Inc.
TWF #03007.00
consultant

APPROVED
VERIFICATION STAMP
DIVISION OF THE STATE ARCHITECT
10577
APP. 01 10-06-04
AC RLS. SS
DATE 6-9-04
agency

SAN RAMON VALLEY CENTER
CONTRA COSTA COMMUNITY COLLEGE DISTRICT
SAN RAMON, CALIFORNIA
owner

tBP project number : 20212.00
file name: .
drawn by: ABC checked by:
date: 03-01-04 plot scale: 1:1

Rev:	date:	description:
1	05-26-04	DESIGN CLARIFICATIONS

drawing title: building no:.
CENTRAL PLANT PLAN POWER/SIGNAL
drawing no:
CP-E5.10
drawing . of

RE-ORIGINATED DRAWING TO PLOT AT 1/4"=1'-0"

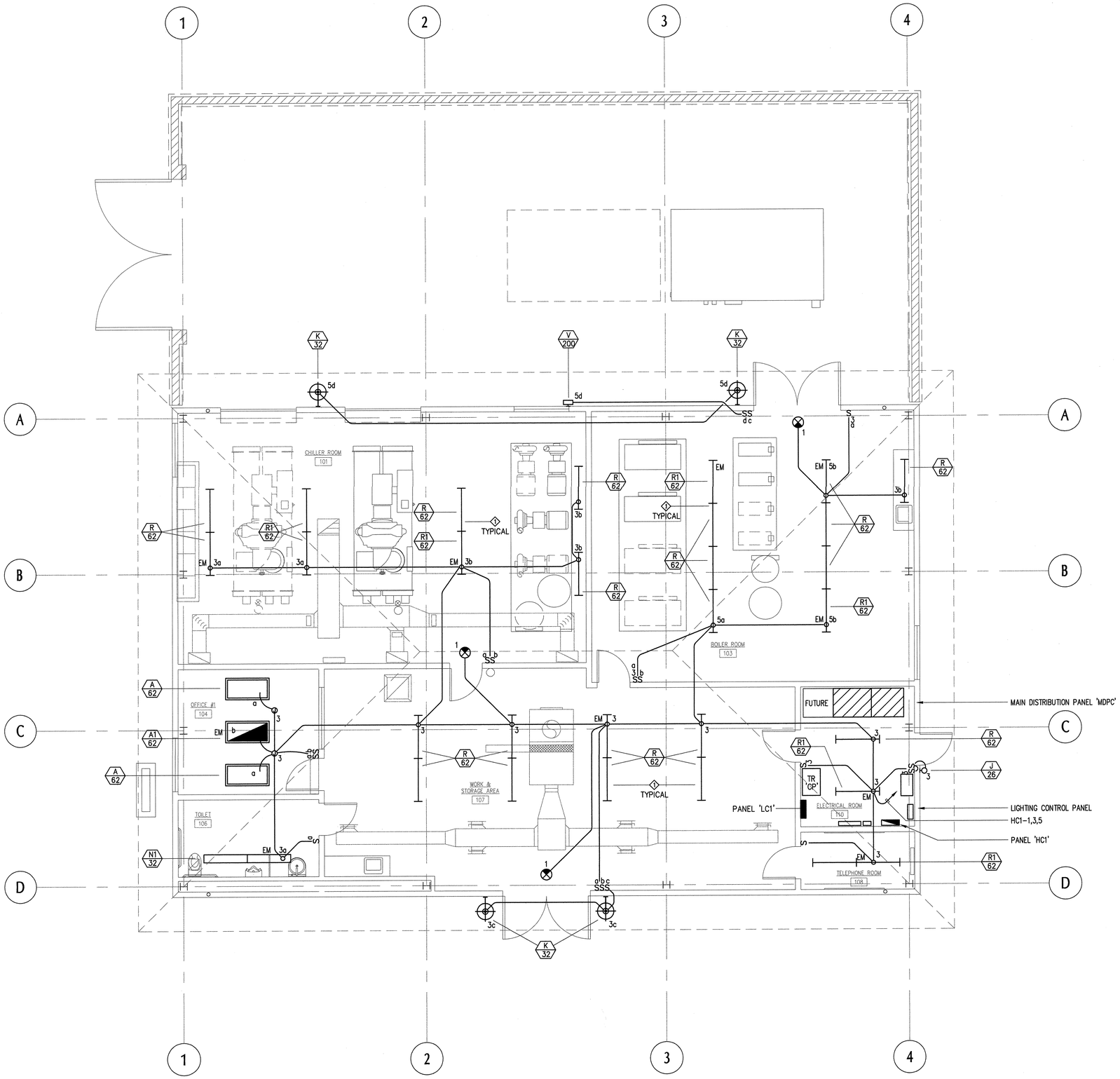

SHEET NOTES

1. STEM MOUNT FIXTURES TO ROOF STRUCTURE WITH SWIVEL HANGER. SEE DETAIL
2. COORDINATE FINAL LOCATION OF ALL LIGHTING FIXTURES WITH MECHANICAL PIPING, DUCTWORK, ETC.

KEY PLAN

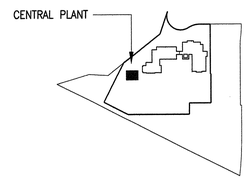

CENTRAL PLANT PLAN · LIGHTING
SCALE: 1/4" = 1'-0"
1

tBP
architecture
planning
interiors
management

tBP/Architecture
1000 Burnett Ave, Suite 140
Concord, CA 94520
ph: 925.246.6419 fx: 925.246.6495

architect

CONSULTING ENGINEERS
2282 Second Street, 3rd Floor
San Francisco, CA 94105
TEL (415) 247-8700
FAX (415) 247-8711
twfsf@pacbell.net

TOFT WOLFF FARROW Inc.

TWF #03007.00

consultant

APPROVED
IDENTIFICATION STAMP
DIVISION OF THE STATE ARCHITECT
APPL 01 105719
AC
DATE 6-9-04

agency

SAN RAMON VALLEY CENTER

CONTRA COSTA COMMUNITY COLLEGE DISTRICT

SAN RAMON, CALIFORNIA

owner

tBP project number: 20212.00
file name:
drawn by: ABC checked by:
date: 03-09-04 plot scale: 1:1

Rev:	date:	description:
1	05-26-04	DESIGN CLARIFICATIONS

drawing title: building no.:
CENTRAL PLANT PLAN LIGHTING

drawing no.:
CP-E5.20
drawing of

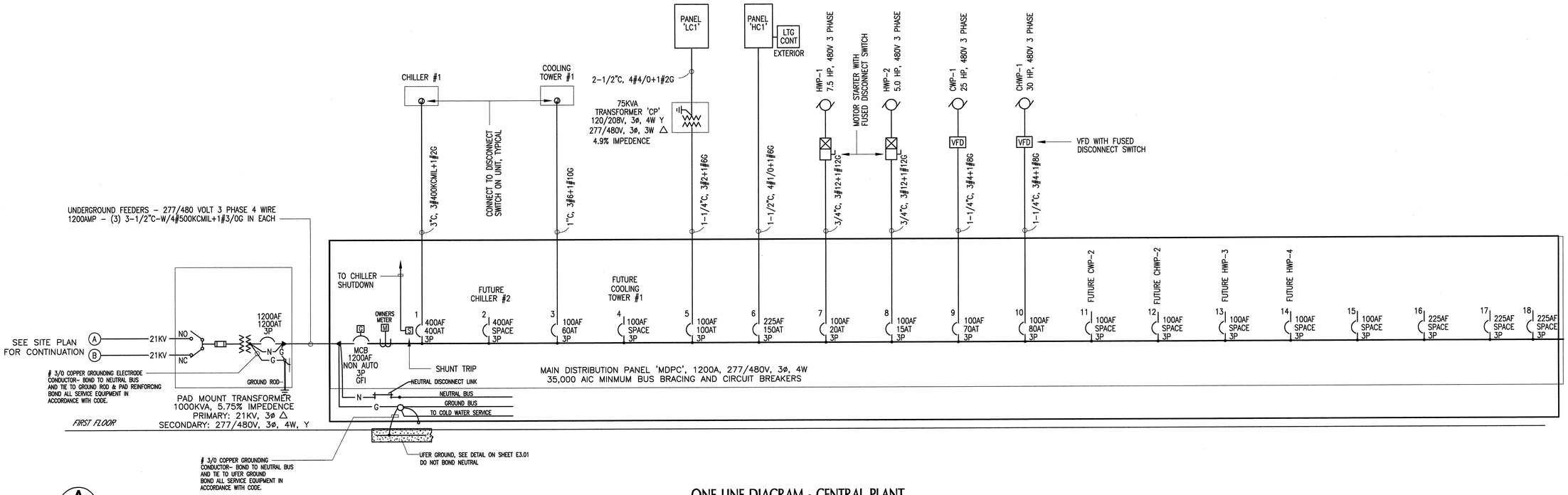

A 5.30

ONE LINE DIAGRAM - CENTRAL PLANT

NOT TO SCALE

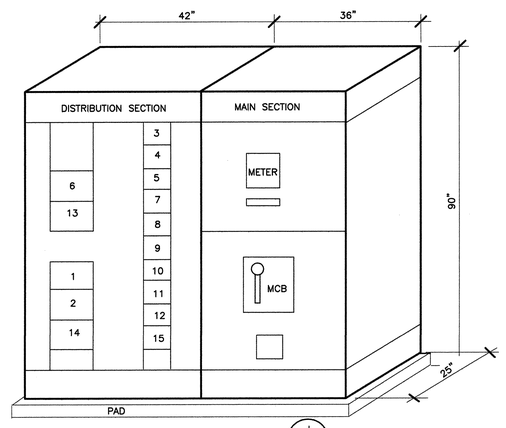

FOR ANCHORAGE OF SWITCHBOARD SEE DETAIL J 4.01

B 5.30

SWITCHBOARD 'MDPC' - ELEVATION

NOT TO SCALE

PANEL 'MDPC' (Central Plant)

VOLTS: 277/480V — PHASE: 3 — MAIN: 1200A 3P MCB (100% Rated)
MOUNTING: FLOOR — WIRE: 4 — BUSSING: 1200 AMPS

LOAD	*	A-VA	B-VA	C-VA	BKR	CT	CT	BKR	A-VA	B-VA	C-VA	*	LOAD
CHILLER #1	M	72763			400/3s	1	8	15/3	2102			M	HWP-2
----	M		72763		---			---		2102		M	----
----	M			72763	---			---			2102	M	----
SPACE (FUT. CHILLER) 400A FR	M	72763			-/3b	2	9	70/3	9408			M	CWP-1
----	M		72763		V--			---		9405		M	----
----	M			72763	---			---			9406	M	----
COOLING TOWER #1	M	7470			60/3	3	10	60/3	11066			M	CHWP-1
----	M		7470		---			---		11066		M	----
----	M			7470	---			---			11066	M	----
SPACE (FUT. COOLING TOWER)	M	7470			-/3b	4	11	-/3b	9408			M	SPACE ONLY (FUT. CWP) 100A FR
100A FR	M		7470		---			---		9406		M	----
----	M			7470	---			---			9406	M	----
TRANSFORMER 'CP'	P	6550			100/3	5	12	-/3b	11066			M	SPACE ONLY (FUT. CHWP)100A FR
(PANEL 'LC1')	P		6550		---			---		11066		M	----
----	P			3603	---			---			11066	M	----
PANEL 'HC1'	P	8940			150/3	6	13	-/3b	5200			M	SPACE ONLY (FUT. HWP) 100A FR
----	P		14640		---		14	-/3b		5200		M	SPACE ONLY (FUT. HWP) 100A FR
----	P			9140	---		15	-/3b			5200	M	SPACE ONLY 100A FR
HWP-1	M	3043			20/3	7	16	-/3					SPACE ONLY 225A FR
----	M		3043		---		17	-/3					SPACE ONLY 225A FR
----	M			3043	---		18	-/3					SPACE ONLY 225A FR
PHASE TOTALS:		227245	232945	224498	684688 =TOTAL CONNECTED LOAD,VA (FOR DEMAND LOAD SEE BELOW)								
PHASE AMPERES:		820.0	840.5	810.1									

*DEMAND LOAD CALCULATION:

L=LIGHTING LOADS:	1.25	X	29300	=	36625 VA
C=CONTINUOUS LOADS, OTHER:	1.25	X	0	=	0 VA
M=MOTOR LOADS (INCL LGST):	1.00	X	640285	=	640285 VA
LARGEST, VA:	0.25	X	109000	=	27250 VA
R=RECEPTACLES: 1ST 10K:	1.00	X	4503	=	4503 VA
BALANCE:	0.50	X	0	=	0 VA
K=KITCHEN LOADS: QTY: 0	1.00	X	0	=	0 VA
N=NONCONTINUOUS LOADS, OTHER:	1.00	X	10600	=	10600 VA
(P=PANEL, INCL. IN ABOVE)					
NEW DEMAND LOAD				=	719263 VA = 865.2 AMPERES
EXISTING LOAD VA		X	1.25	=	0 VA = 0.0 AMPERES
TOTAL LOAD				=	719263 VA = 865.2 AMPERES

NOTES:
a. Shunt trip circuit breaker.
b. Panel sized for future loads which are included in the total load, see below.

PANEL 'HC1'

VOLTS: 277/480V — PHASE: 3 — MAIN: MLO
MOUNTING: SURFACE — WIRE: 4 — BUSSING: 225A

LOAD	*	A-VA	B-VA	C-VA	BKR	CT	CT	BKR	A-VA	B-VA	C-VA	*	LOAD
EXIT LIGHTING	L	300			20/1	1	2	20/1	2000			L	EXTERIOR LIGHTING, PC CONTROLLED
LIGHTING	L		7800		20/1	3	4	20/1		2500		L	EXTERIOR LIGHTING
LIGHTING	L			1900	20/1	5	6	20/1			3000	L	EXTERIOR LIGHTING
EXTERIOR LIGHTING VIA 'LCP'	L	600			20/1	7	8	20/1	2500			L	EXTERIOR LIGHTING
SPARE					20/1	9	10	20/1		1600		L	EXTERIOR LIGHTING, PC CONTROLLED
SPARE					20/1	11	12	20/1			900	L	EXTERIOR LIGHTING
EXTERIOR LIGHTING, PC CONTROLLED	L	1400			20/1	13	14	20/1	1000			L	EXTERIOR LIGHTING
EXTERIOR LIGHTING	L		1600		20/1	15	16	-/1					SPACE ONLY
EXTERIOR LIGHTING	L			2200	20/1	17	18	-/1					SPACE ONLY
FAN COIL UNIT	M	1140			20/3	19	20	-/1					SPACE ONLY
----	M		1140		---	21	22	-/1					SPACE ONLY
----	M			1140	---	23	24	-/1					SPACE ONLY
SPACE ONLY					-/1	25	26	-/1					SPACE ONLY
SPACE ONLY					-/1	27	28	-/1					SPACE ONLY
SPACE ONLY					-/1	29	30	-/1					SPACE ONLY
SPACE ONLY					-/1	31	32	-/1					SPACE ONLY
SPACE ONLY					-/1	33	34	-/1					SPACE ONLY
SPACE ONLY					-/1	35	36	-/1					SPACE ONLY
SPACE ONLY					-/1	37	38	-/1					SPACE ONLY
SPACE ONLY					-/1	39	40	-/1					SPACE ONLY
SPACE ONLY					-/1	41	42	-/1					SPACE ONLY
PHASE TOTALS:		8940	14640	9140	32720 =TOTAL CONNECTED LOAD,VA (FOR DEMAND LOAD SEE BELOW)								
PHASE AMPERES:		32.3	52.8	33.0									

*DEMAND LOAD CALCULATION:

L=LIGHTING LOADS:	1.25	X	29300	=	36625 VA
C=CONTINUOUS LOADS, OTHER:	1.25	X	0	=	0 VA
M=MOTOR LOADS (INCL LGST):	1.00	X	3420	=	3420 VA
LARGEST, VA:	0.25	X	0	=	0 VA
R=RECEPTACLES: 1ST 10K:	1.00	X	0	=	0 VA
BALANCE:	0.50	X	0	=	0 VA
K=KITCHEN LOADS: QTY: 0	1.00	X	0	=	0 VA
N=NONCONTINUOUS LOADS, OTHER:	1.00	X	0	=	0 VA
(P=PANEL, INCL. IN ABOVE)					
NEW DEMAND LOAD				=	40045 VA = 48.2 AMPERES
EXISTING LOAD VA		X	1.25	=	0 VA = 0.0 AMPERES
TOTAL LOAD				=	40045 VA = 48.2 AMPERES

NOTES:

(N) PANEL 'LC1'

VOLTS: 120/208V — PHASE: 3 — MAIN: 225A, 3P CB
MOUNTING: SURFACE — WIRE: 4 — BUSSING: 225A

LOAD	*	A-VA	B-VA	C-VA	BKR	CT	CT	BKR	A-VA	B-VA	C-VA	*	LOAD
RECEPTACLES	R	900			20/1	1	2	20/1	600			N	BOILER 1
RECEPTACLES	R		900		20/1	3	4	20/1		600		N	BOILER 2
RECEPTACLES	R			900	20/1	5	6	20/1			400	N	HVAC CONTROL
RECEPTACLES	R	900			20/1	7	8	20/1	400			N	HVAC CONTROL
RECEPTACLES	R		900		20/1	9	10	20/1		400		N	SPARE (FUTURE CONTROL)
120V CONTROL, COOL. TOWER	N			400	20/1	11	12	20/1			300	N	SPARE (FUTURE BOILER)
FIRE ALARM	N	400			20/1a	13	14	20/1	250			N	SPARE (FUTURE BOILER)
NAP POWER SUPPLY	N		250		20/1	15	16	20/1		400		M	AC UNIT HP1
LIGHTING CONTROL PANEL	R			3	20/1	17	18	20/2			600	M	CONDENSING UNIT HP0
ELECT. WATER HEATER	N	1500			20/1	19	20	---	600			M	---
ELECT. WATER HEATER	N		1500		20/1	21	22	20/1		1000		N	CONTROL, CHILLER ROOM
SPARE					20/1	23	24	20/1			400	N	IRRIGATION CONTROLLER
TELE RECEPTACLES	N	600			20/1	25	26	20/1	400			N	IRRIGATION CONTROLLER
TELE RECEPTACLES	N		600		20/1	27	28						SPACE
TELE RECEPTACLES	N			600	20/1	29	30						SPACE
SPACE					20/1	31	32						SPACE
SPACE						33	34						SPACE
SPACE						35	36						SPACE
SPACE						37	38						SPACE
SPACE						39	40						SPACE
SPACE						41	42						SPACE
PHASE TOTALS:		6550	6550	3603	16703 =TOTAL CONNECTED LOAD,VA (FOR DEMAND LOAD SEE BELOW)								
PHASE AMPERES:		54.5	54.5	30.0									

*DEMAND LOAD CALCULATION:

L=LIGHTING LOADS:	1.25	X	0	=	0 VA
C=CONTINUOUS LOADS, OTHER:	1.25	X	0	=	0 VA
M=MOTOR LOADS (INCL LGST):	1.00	X	1600	=	1600 VA
LARGEST, VA:	0.25	X	0	=	0 VA
R=RECEPTACLES: 1ST 10K:	1.00	X	4503	=	4503 VA
BALANCE:	0.50	X	0	=	0 VA
K=KITCHEN LOADS: QTY: 0	1.00	X	0	=	0 VA
N=NONCONTINUOUS LOADS, OTHER:	1.00	X	10600	=	10600 VA
(P=PANEL, INCL. IN ABOVE)					
NEW DEMAND LOAD				=	16703 VA = 46.4 AMPERES
EXISTING LOAD VA		X	1.25	=	0 VA = 0.0 AMPERES
TOTAL LOAD				=	16703 VA = 46.4 AMPERES

NOTES:
a. provide lock on type circuit breaker, label "FIRE ALARM" with paint red.

tBP architecture planning interiors management
tBP/Architecture
1000 Burnett Ave, Suite 140
Concord, CA 94520
ph: 925.246.6419 fx: 925.246.6495
architect

CONSULTING ENGINEERS
282 Second Street, 3rd Floor
San Francisco, CA 94105
TEL (415) 321-8700
FAX (415) 321-8701
twfe@pacbell.net
TOFFT WOLFE FARROW INC.
TWF #03007.00
consultant

APPROVED
IDENTIFICATION STAMP
DIVISION OF THE STATE ARCHITECT
APPL ID 1-105778
AC FLS SS
DATE 6-1-04

agency

SAN RAMON VALLEY CENTER
CONTRA COSTA COMMUNITY COLLEGE DISTRICT
SAN RAMON, CALIFORNIA

owner

tBP project number: 20212.00
file name:
drawn by: ABC checked by:
date: 03-09-04 plot scale: 1:1

Rev:	date:	description:
1	05-26-04	DESIGN CLARIFICATIONS

drawing title: CENTRAL PLANT - 1 LINE AND PANEL SCHEDULES
building no.:
drawing no.: CP-E5.30
drawing of

(E) ARCHITECT DESIGNED TO ENJOY WHAT YOU DO

FIRE ALARM GENERAL NOTES

1. MOUNT ALL VISUAL SIGNALING APPLIANCES AT 80" ABOVE FINISH FLOOR TO BOTTOM OF LENS OR 6" BELOW FINISH CEILING WHICHEVER IS LOWER, PER "ADA" REQUIREMENTS.
2. ALL EQUIPMENT SHALL BE UL AND CALIFORNIA STATE FIRE MARSHAL (CSFM) LISTED
3. ALL WIRING SHALL BE IN ACCORDANCE WITH THE NATIONAL ELECTRICAL CODE (NEC) AND AUTHORITIES HAVING JURISDICTION.
4. ALL JUNCTION BOXES SHALL BE SIZED IN ACCORDANCE WITH THE NATIONAL ELECTRICAL CODE (NEC).
5. CONTRACTOR SHALL FURNISH ACCESS PANELS TO AREAS THAT REQUIRE SERVICING, TROUBLE SHOOTING, ETC..
6. DO NOT DEVIATE FROM CONDUIT RUNS AS SHOWN ON FLOOR PLANS WITHOUT PRIOR APPROVAL FROM SYSTEM SUPPLIER (SIEMENS). FACTOR SUCH AS EXCESSIVE VOLTAGE DROP, ADDITIONAL PARTS, ENGINEERING, ETC.. THAT ARE A RESULT OF CONDUIT RUN DEVIATIONS SHALL BE THE SOLE RESPONSIBILITY OF THE CONTRACTOR.
7. ALL 120VAC POWER REQUIREMENTS FOR THE FIRE ALARM SYSTEM SHALL BE FURNISHED BY THE CONTRACTOR AND SHALL MEET ALL REQUIREMENTS OF THE AUTHORITIES HAVING JURISDICTION.
8. ALL FIRE ALARM DEVICE BACKBOXES, FIRE ALARM TERMINAL CABINETS, GUTTERS, JUNCTION BOXES, AND ASSOCIATED CONDUITS SHALL BE FURNISHED AND INSTALLED BY CONTRACTOR UNLESS OTHERWISE NOTED. REFER TO FIRE ALARM SYMBOL LIST AND/OR MOUNTING DETAILS FOR ADDITIONAL INFORMATION. SYSTEM SUPPLIER PROVIDED BACKBOX SHALL BE INSTALLED BY ELECTRICAL CONTRACTOR UNLESS OTHERWISE NOTED.
9. SMOKE DETECTOR TESTING SHALL BE ACCOMPLISHED WITH TEST SMOKE AS PER THE MANUFACTURER'S INSTRUCTIONS.
10. ALL WIRING, ANNUNCIATING DEVICES AND ANNUNCIATOR PANEL SHALL BE SUPERVISED TO THE PRINCIPAL POINT OF ANNUNCIATION. THE FIRE ALARM CONTROL PANEL TO SUPERVISE THE ANNUNCIATOR PANEL, ALL INITIATING AND INDICATING DEVICE CIRCUITS.
11. ALL WIRING SHALL BE CUT FOR IN AND OUT. WIRING SHALL NOT BE LOOPED THROUGH DEVICES.
12. POINT AND COMMON ANNUNCIATION AND T-TAPPING ARE PROHIBITED.
13. PROVIDE 3/4" CONDUIT FROM FIRE ALARM CONTROL PANEL TO TELEPHONE BACKBOARD.
14. FIRE ALARM SYSTEM INSTALLATION COMPANY SHALL BE UL LISTED.
15. FIRE ALARM SHOP DRAWINGS SHALL BE SIGNED BY A NICET CERTIFIED TECHNOLOGIST TO ENSURE PROPER SPECIFICATION COMPLIANCE.
16. ALL CONDUITS ARE 3/4" MINIMUM.
17. FIRE ALARM SYSTEM WERE SHOWN DIAGRAMATICALLY TO MEET REQUIRED CODES. EXACT LOCATION OF FIXTURES SHALL BE DETERMINED AND VERIFIED BY THE FIRE ALARM CONTRACTOR AND SHALL INSPECT AND PERFORMED ALL TEST FOR PROPER OPERATION OF THE SYSTEM.
18. ALL FIRE ALARM WIRING SHALL BE IN METAL RACEWAYS.
19. COORDINATE INSTALLATION OF DUCT SMOKE DETECTORS AND RELAY SHUTDOWN WITH THE MECHANICAL CONTRACTOR.
20. ALL FIRE ALARM JUNCTION BOX COVERS TO BE PAINTED RED AND MARKED WITH ADDRESS AND FUNCTION.

FIRE ALARM FACP BATTERY CALCULATIONS

BASED ON Siemens MXL PANEL

Siemens #	QTY	Standby Current	Alarm Current	Standby Total	% In Alarm	Alarm Total	Project: Contra Costa Community College,San Ramon,CA
MMB-2 Main Board	1	0.1750	0.1750	0.175	100%	0.175	
ALD-21 Loop (1.1mA per device)	240	0.0011	0.0011	0.264	100%	0.264	
MOM-4	1	0.0000	0.0000	0.000	100%	0.000	
MKB-2 Control Keypad Annunciator	1	0.0050	0.0050	0.005	100%	0.005	
RCC-1F Remote command center	2	0.0800	0.0800	0.160	100%	0.160	
NIM-1W	1	0.0700	0.0700	0.070	100%	0.070	
		TOTAL	STANDBY	0.674			
		TOTAL	ALARM			0.674	

HOURS OF STAND-BY	24	0.674		16.1760	TOTAL STANDBY
MINUTES IN ALARM (5)	5	0.674	0.0833	0.0562	ALARM A.H.
				16.2322	SUB-TOTAL
				X 1.25	
				20.2902	TOTAL A.H. NEEDED

Note: ALD calculated at max number of devices/loop

Provide 36 amp hour batteries AS REQUIRED BY DSA

FIRE ALARM SEQUENCE OF OPERATIONS MATRIX

DEVICE ACTION	INITIATION DEVICES: MANUAL PULL STATION	SMOKE DETECTOR HEAT DETECTOR	SMOKE DUCT DETECTOR	SPRINKLER WATER FLOW	SPRINKLER WATER TAMPER
SOUND CONTROL PANEL TROUBLE BUZZER	ON WIRING FAULT	ON WIRING FAULT	ON WIRING FAULT	ON WIRING FAULT	ON WIRING FAULT
ACTIVATE RELAY FOR MONITORING (ALARM OR TROUBLE)	YES	YES	YES	YES	YES
ANNUNCIATE AT FIRE ALARM CONTROL PANEL (ALARM OR TROUBLE)	YES	YES	YES	YES	TROUBLE ONLY
ANNUNCIATE AT REMOTE FIRE ALARM ANNUNCIATOR (ALARM OR TROUBLE)	YES	YES	YES	YES	TROUBLE ONLY
SEND SIGNAL TO CENTRAL STATION SERVICE CO.	YES	YES	YES	YES	YES
ACTIVATE AUDIBLE / VISUAL ALARM SIGNAL THROUGHOUT BUILDING	YES	YES	YES	YES	NO
SHUTDOWN AIR HANDLING UNITS (HVAC)	NO	YES	YES	NO	NO
SHUTDOWN FIRE/SMOKE DAMPERS	YES	YES	YES	YES	NO

FIRE ALARM SYSTEM NOTES

SYSTEM DESCRIPTION:
Automatic fire alarm system utilizing addressable devices including smoke detectors, smoke duct detectors, manual pull stations and sprinkler system monitoring of flow and tamper devices. Notification appliances strobes and horns, with synchronization of strobes. Remote fire alarm annunciator at reception area. Interface to new campus main fire alarm panel. Initiation devices shall be class A, addressable, notification appliances class B, style Y, communications loop style 7.

GENERAL NOTES:
1 Final Fire Alarm test will be witnessed by Local Fire Authority with the DSA Inspector of Record (IOR).
2 Underground and exterior conduits will have water-tight fittings.
3 Fire alarm Device Mounting Heights:
Pull station: 48" to center line of device above finished floor.
Horn Interior: 90" to top of device above finished floor, not less than 6" from ceiling.
Wall mounted Strobe or Horn/Strobe: 80" to bottom of device and not greater than 96" above finished floor not less than 6" from ceiling.
4 Audible device(s) shall be at least 15dBA above average ambient sound level but not less than 75dBA at 10' or more than 120dBA in total, throughout!
5 Audible devices shall sound the California Uniform Fire Alarm Signal in Temporal-Three mode.
6 Provide at least one exterior horn for buildings for E occupancies.
7 Visual devices shall not exceed 2 flashes per second and shall not be less than 1 flash every second.
8 All visual devices shall be synchronized.
9 HORNS SHALL BE SILENCED WITH STROBES CAPABLE OF OPERATING CONTINUOUSLY AFTER HORNS ARE SILENCED.

APPLICABLE CODES:
1 CBC 2001: CEC 2001; CMC 2001; CFC 2001
2 State Fire Marshal Title 19, Public Safety
3 NFPA 72, 1999 Edition w/CA Amendments, Fire Alarm Code

SEQUENCE OF OPERATION:
Upon activation of any alarm initiation device, (i.e. smoke detector, manual pull station, sprinkler flow device or duct smoke detector) building notification appliances shall activate, alarm signals shall be sent to campus alarm panel, and a signal sent to shut down building ventilation equipment. Upon any trouble or abnormal condition the panel shall display the location, type of device and point status. See matrix.
The fire alarm system shall be supervised by a listed Central Station Service in accordance with NFPA-72.

SCOPE OF FIRE ALARM WORK:
The fire alarm system will be a new system. The system will be addressable with the following components:
1 Fire alarm control panel with battery back up
2 Remote annunciator
3 Connection for campus monitoring central station.
4 Smoke detectors and duct smoke detectors
5 Monitor of sprinkler flow and tamper
6 Manual pull stations
7 Notification appliances, horns, strobes and horn/strobes
8 Shut down of ventilation equipment
9 Shut down of fire smoke dampers.

FIRE ALARM EQUIPMENT LIST

QTY.	MODEL NUMBER	MAKE	DESCRIPTION	CA STATE FIRE MARSHAL (CSFM) NUMBER	EXPIRATION DATE
1	5000-MXL	SIEMENS	MAIN FIRE ALARM CONTROL PANEL ANALOG/ADDRESSABLE, WITH THE FOLLOWING:	7165-0067:144	06-30-04
	MMB-2	SIEMENS	MAIN CONTROL BOARD	7165-0067:144	06-30-04
	MPS-12 AMP	SIEMENS	POWER SUPPLY, 12 AMP	7165-0067:144	06-30-04
	MKB-2	SIEMENS	DISPLAY AND KEYBOARD	7165-0067:144	06-30-04
	NIM-1W	SIEMENS	COMMUNICATIONS MODULE	7300-0067:172	06-30-04
	MOM-4	SIEMENS	INTERFACE MODULE	7165-0067:144	06-30-04
	ALD-21	SIEMENS	LOOP DRIVER	7165-0067:144	06-30-04
	BTX-1	SIEMENS	36 AMP HOUR BATTERIES	7165-0067:144	06-30-04
	MSE-MME-3	SIEMENS	ENCLOSURE FOR ALL ABOVE, AS REQUIRED	7165-0067:144	06-30-04
3	TRI-M	SIEMENS	INTERFACE MODULE, MONITORING	7300-0067:146	06-30-04
21	TRI-R	SIEMENS	INTERFACE MODULE RELAY	7300-0067:146	06-30-04
4	TRI-S	SIEMENS	INTERFACE MODULE SIGNAL	7300-0067:146	06-30-04
45	MSI-20B	SIEMENS	ADDRESSABLE MANUAL PULL STATION	7150-0067:036	06-30-04
18	AD11P-FP11	SIEMENS	PHOTO-ELECTRIC DUCT DETECTOR WITH PHASE AND SAMPLING TUBE AND BASE	3240-0067:116	06-30-04
69	FP11	SIEMENS	ADDRESSABLE PHOTO-ELECTRIC SMOKE DETECTOR	7272-0067:203	06-30-04
69+	DB11	SIEMENS	SMOKE DETECTOR BASE	7300-0067:134	06-30-04
2	RCC-1	SIEMENS	REMOTE ANNUNCIATOR	7120-0067:152	06-30-04
8	RL6	SIEMENS	REMOTE INDICATOR LIGHT	7300-0067:055	06-30-04
-	FPT11	SIEMENS	ADDRESSABLE HEAT DETECTOR	7272-0067:202	06-30-04
-	DB11	SIEMENS	HEAT DETECTOR BASE	7300-0067:134	06-30-04
64	NS-24MCW-FW	WHEELOCK	HORN/STROBE (15 OR 75 CD RATING)	7125-0785:142	06-30-04
30	RSS-24MCW-FW	WHEELOCK	STROBE (15 OR 75 CD RATING)	7125-0785:141	06-30-04
11	AH-24WP	WHEELOCK	WEATHERPROOF HORN WITH WIRE GUARD	7123-0785:131	06-30-04
4	PS-12/24-8	WHEELOCK	REMOTE POWER SUPPLY WITH INTEGRAL SYNCHRONIZATION (2) 12 AMP HOUR BATTERIES	7315-0785:149	06-30-04

FIRE ALARM SYMBOL LIST

SYMBOL	DESCRIPTION
FACP FACP	MAIN FIRE ALARM CONTROL PANEL, ANALOG/ADDRESSABLE
FATP FATP	FIRE ALARM CONTROL PANEL TRANSPONDER -REMOTE PANEL
NAP NAP	NOTIFICATION APPLIANCE POWER SUPPLY
ANN ANN	REMOTE FIRE ALARM ANNUNCIATOR PANEL
F	ADDRESSABLE MANUAL PULL STATION
SD	ADDRESSABLE PHOTO-ELECTRIC SMOKE DETECTOR
MR	MULTI-VOLTAGE CONTROL RELAY
(15) F 1-1	STROBE (15/75 CD RATING) 1-# INDICATES APPLIANCE #1 ON CIRCUIT #1
(75) H 1-2	HORN/STROBE (75 CD RATING) 1-2 INDICATES APPLIANCE #1 ON CIRCUIT #2
(75) F 1-3	STROBE (75 CD RATING) 1-3 INDICATES APPLIANCE #1 ON CIRCUIT #3
—— FA ——	FIRE ALARM WIRING IN CONDUIT
—— FN ——	FIRE ALARM NOTIFICATION WIRING IN CONDUIT
WP H 2-1	WEATHERPROOF HORN 2-1 INDICATES APPLIANCE #2 ON CIRCUIT #1
SF ST	SPRINKLER FLOW AND SPRINKLER TAMPER SWITCH
TS	TAMPER SWITCH AT FIRE DEPT. CONN. DETECTOR CHECK
DD	ADDRESSABLE DUCT SMOKE DETECTOR WITH SAMPLING TUBES
DD LV	ADDRESSABLE DUCT SMOKE DETECTOR - LOW VELOCITY DUCT MOUNTED
	REMOTE INDICATOR LIGHT FOR DUCT DETECTOR
SF	FIRE SMOKE DAMPER - 120 VOLT
HD	ADDRESSABLE HEAT DETECTOR
IM S	INTERFACE MODULE; SIGNAL
IM M	INTERFACE MODULE; MONITOR
IM R	INTERFACE MODULE; RELAY
EOL	END OF LINE RESISTOR
1A1, ETC.	ADDRESS NUMBER,-LOOP1A, DEVICE #1
A, B, C ETC.	WIRING TYPE; SEE FIRE ALARM WIRING LEGEND

FOR ADDITIONAL SYMBOLS SEE DWG. E0-1.

FIRE ALARM WIRE LEGEND

SYMBOL	FOR	NUMBER OF CONDUCTORS	TYPE
A	ADDRESSABLE DEVICE INITIATION CIRCUIT, 24V	#16 TWISTED SHIELDED PAIR WEST PENN 1991	FPLF
B	DEVICE POWER, 24VDC	2#14	THHN
C	NOTIFICATION CIRCUIT, 24VDC	2#12	THHN
D	MISCELLANEOUS CIRCUIT, 24VDC	2#14	THHN
E	120V POWER	2#12=1 #12G	THHN
F	STYLE 7 COMMUNICATION LOOP	#18 TWISTED SHIELDED PAIR WEST PENN AQ293 FPL/PLTC	FPL/PLTC
G	120V FIRE SMOKE DAMPER CIRCUIT	3 #12 = 1#12G	THHN

NOTE: 2A = 2 CABLES, 3A = 3 CABLES, ETC.
WIRING NOTES:
1. MINIMUM CONDUIT SIZE: 3/4".
2. CONDUIT TO BE SIZED FOR 40% FILL PER NEC.
3. 120 VOLT WIRING SHALL RUN IN SEPARATE CONDUITS FROM FIRE ALARM CKTS.

FIRE ALARM DEVICE ADDRESSES

	ADDRESS	DEVICES
LOOP 1A 1ST FL EAST	1A1 THRU 1AX	1st FLOOR EAST INITIATION DEVICES
	1A61 THRU 1AXX	1st FLOOR EAST CONTROL DEVICES
LOOP 2A 2ND FL EAST ATTIC	2A1 THRU 2AX	2nd FLOOR EAST INITIATION DEVICES
	2A61 THRU 2AXX	2nd FLOOR EAST CONTROL DEVICES
LOOP 1B 1ST FL WEST	1B1 THRU 1BX	1st FLOOR WEST INITIATION DEVICES
	1B61 THRU 1BXX	1st FLOOR WEST CONTROL DEVICES
LOOP 2B 2ND FL WEST ATTIC	2B1 THRU 2BX	2nd FLOOR WEST INITIATION DEVICES
	2B61 THRU 2BXX	2nd FLOOR WEST CONTROL DEVICES

CONNECT TO LOOP 1 AND 2, MAXIMUM 60 INITIATION AND 60 CONTROL DEVICES PER LOOP. ACTUAL ADDRESS NUMBERS TO BE INDICATED IN SHOP DRAWINGS

tBP architecture planning interiors management
tBP/Architecture
1000 Burnett Ave, Suite 140
Concord, CA 94520
ph: 9252466419 fx: 9252466495
architect

CONSULTING ENGINEERS
282 Second Street, 4st Floor
San Francisco, CA 94105
(415) 247-8711
FAX (415) 247-8711
twf-sf@pacbell.net
TOFT WOLFF FARROW Inc.
TWF #03007.00
consultant

DIV. OF THE STATE ARCHITECT
OFFICE OF REGULATION SERVICES
APPL. NO. 10719
FILE
DATE

agency

SAN RAMON VALLEY CENTER
CONTRA COSTA COMMUNITY COLLEGE DISTRICT
SAN RAMON, CALIFORNIA

owner

tBP project number: 2021.00
file name:
drawn by: ABC checked by:
date: 03-09-04 plot scale: 1:1

Rev.	date:	description:
1	03-09-04	DSA BACKCHECK

drawing title: FIRE ALARM LEGEND GENERAL NOTES
building no:
drawing no: FA0.01
drawing of

IF ARCHITECT DESIGNED TO PLOT MAX 100.00

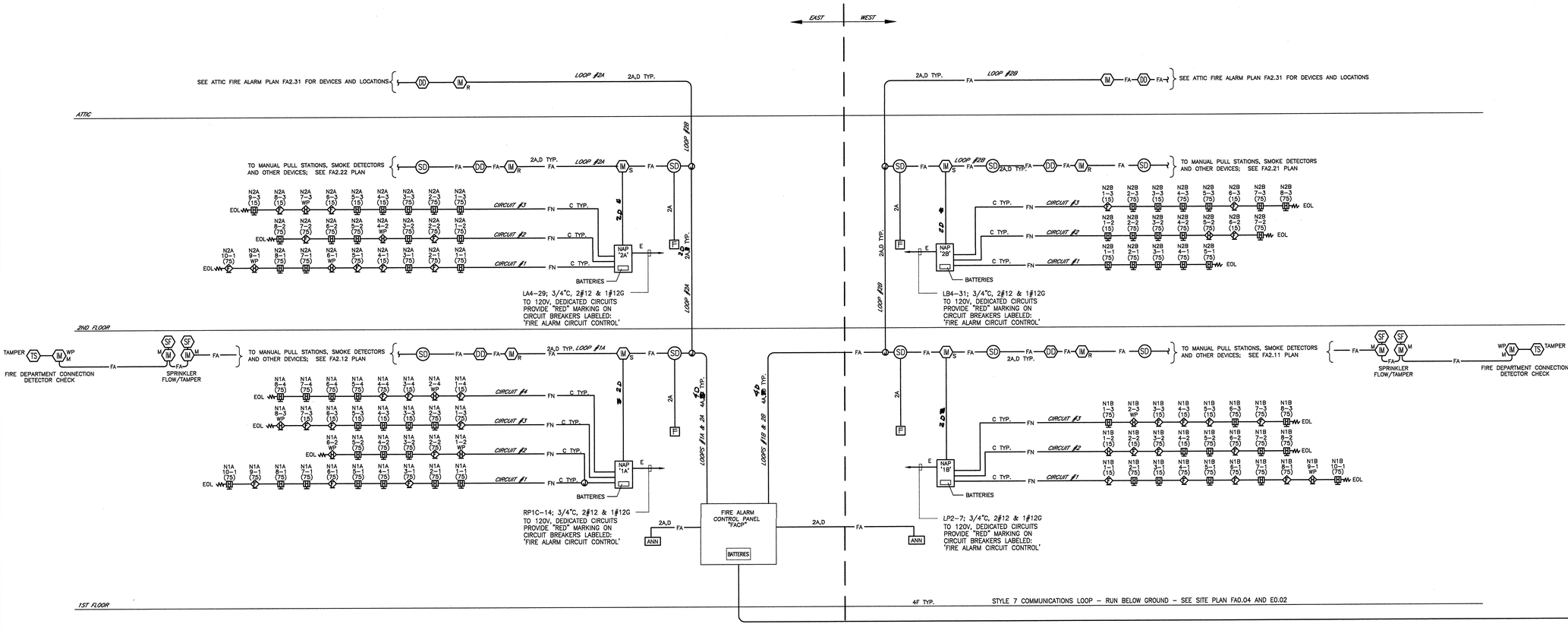

FIRE ALARM SYSTEM RISER DIAGRAM

NOT TO SCALE

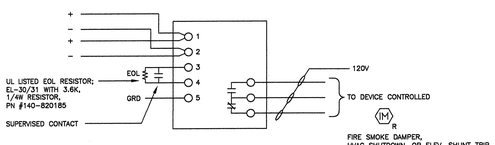

TYPICAL INTERFACE MODULE WIRING DIAGRAM

N.T.S.

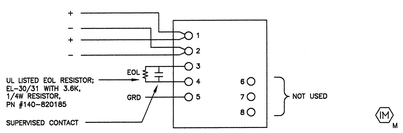

TYPICAL INTERFACE MODULE WIRING DIAGRAM

N.T.S.

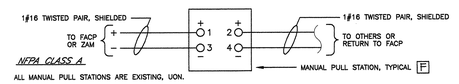

TYPICAL MANUAL PULL STATION WIRING DIAGRAM

N.T.S.

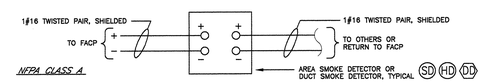

TYPICAL SMOKE, HEAT OR DUCT DETECTOR WIRING DIAGRAM

N.T.S.

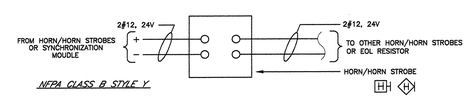

TYPICAL HORN OR HORN/STROBE WIRING DIAGRAM

N.T.S.

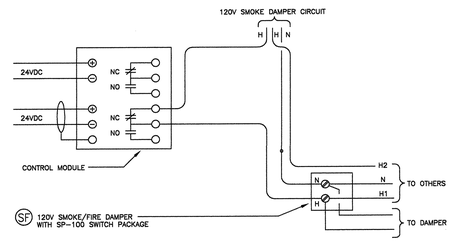

TYPICAL SMOKE/FIRE DAMPER SHUTDOWN WIRING DIAGRAM

N.T.S.

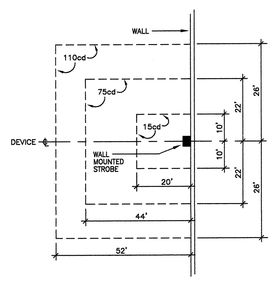

STROBE COVERAGE - OPEN AREAS

NOT TO SCALE

PER NFPA 72A-6-4.4.1.1(a) 0.0375 LUMENS PER SQUARE FOOT

FIRE ALARM RISER NOTES

1. ALL WIRING TO RUN IN CONDUIT. CONDUIT FILL NOT TO EXCEED 40%.
2. REFER TO FLOOR PLANS FOR LOCATION AND CIRCUIT ROUTING FOR ALL DEVICES.

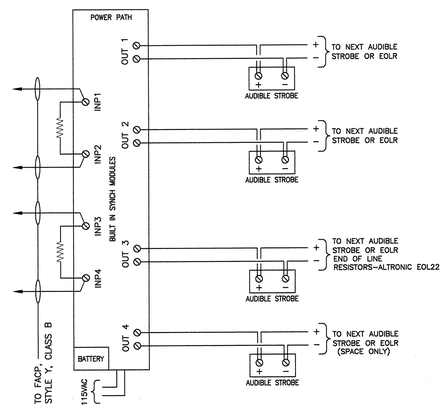

STROBE NOTIFICATION APPLIANCE POWER SUPPLY "NAP" WIRING DIAGRAM

NOT TO SCALE

PROVIDE (2) SIGNAL CIRCUITS TO THE NAP FROM THE FACP FOR SILENCING HORNS AND STROBES SEPARATELY. STROBES SHALL CONTINUE AFTER HORNS ARE SILENCED. DSA INSPECTOR TO VERIFY OPERATION

BE ABSOLUTELY CERTAIN TO SPLIT AWAY YOU GO

132

tBP/Architecture
1000 Burnett Ave, Suite 140
Concord, CA 94520
ph. 9252466419 fx. 9252466495

architect

CONSULTING ENGINEERS
282 Second Street, 3rd Floor
San Francisco, CA 94105
(415) 247-8700
FAX (415) 247-8711
www.tofwolfpark.com
TOFT WOLFE PARKOW Inc.

TWF #03007.00

consultant

DSA APPROVED STAMP
DIV. OF THE STATE ARCHITECT
OFFICE OF REGULATION SERVICES
APPL. NO. 02-119
I.O.S.
DATE

agency

SAN RAMON VALLEY CENTER
CONTRA COSTA COMMUNITY COLLEGE DISTRICT
SAN RAMON, CALIFORNIA

owner

tBP project number : 20212.00
file name: .
drawn by: ABC checked by:
date: 03-09-04 plot scale: 1:1

Rev.	date:	description:
1	03-09-04	DSA BACKCHECK

drawing title: building no:.
FIRE ALARM DETAILS
RISER DIAGRAM

drawing no:
FA0.02
drawing . of

Battery Calculations for External Device Power

FOR : NAP1A

LOAD IN STANDBY AT 24 VOLTS DC

Device Type	Number of Devices		Current (amps)		Total Current (AMPS)
Main PC Board with AC fail Report Delay Enabled	1	X	0.048	=	0.048
EOL Resistors	4	X	0.011	=	0.044
Aux. Devices	0	X		=	0.000
TOTAL STANDBY LOAD =					0.092

LOAD IN ALARM AT 24 VOLTS DC

Device Type	Number of Devices		Current (amps)		Total Current (AMPS)
Main PC Board with AC fail Report Delay Enabled	1	X	0.048	=	0.048
EOL Resistors	4	X	0.011	=	0.044
Sync. Modules	2	X	0.038	=	0.076
strobe Light (15cd)	5	X	0.041	=	0.205
strobe (75cd)	6	X	0.116	=	0.696
Horn Strobe (15cd)	2	X	0.065	=	0.130
Horn Strobe (75cd)	15	X	0.134	=	2.010
WP Horn	4	X	0.041	=	0.164
TOTAL ALARM LOAD =					3.373

Secondary Power Source Battery Calculations

FOR : NAP1A

Standby Load Current (Amps)		Required Standby Time in Hours (24 or 60 Hours).		Ampere Hours
0.092	X	24	=	2.21
Alarm Load Current (Amps)		**Required Alarm Time in Hours (15 Min.) (i.e. 15 Min. = .25 Hrs.)**		
3.373	X	0.25	=	0.84
Total Standby and Alarm Load in Ampere Hours =				3.05
Ampere Hour Load times 1.2 (Rating Factor) =				3.66
Total Ampere Hour Battery Required =				3.66

NOTE:
USE (2) 7.0 AMPERE HOUR BATTERIES

VOLTAGE DROP CALCULATION - NOTIFICATION CIRCUIT

CKT. # 1

BASED ON POINT TO POINT OHMS CALCULATION - ACCEPTABLE LIMIT 10% @ 24 VOLTS = 2.4 VOLTS MAX.
LINE TO LINE VOLTAGE= 24

FROM START POINT OF RUN	TO END POINT OF RUN	CKT. NO.	RUN LENGTH FEET	DEVICE AMP LOAD	ACCUM. AMP LOAD OF CKT.	AMP. FEET	VOLTS DROP THIS SEGMENT	VOLTAGE AT END OF RUN	ACCUM. VOLT DROP	WIRE SIZE
NAP1A	DSM1	1	2	0.038	1.324	2.65	0.009	23.99	0.009	12
DSM1	1-1	1	8	0.134	1.286	10.29	0.035	23.96	0.044	12
1-1	2-1	1	30	0.134	1.152	34.56	0.118	23.84	0.162	12
2-1	3-1	1	30	0.116	1.018	30.54	0.104	23.73	0.265	12
3-1	4-1	1	52	0.134	0.902	46.90	0.160	23.58	0.425	12
4-1	5-1	1	34	0.134	0.768	26.11	0.089	23.49	0.514	12
5-1	6-1	1	18	0.116	0.634	11.41	0.039	23.45	0.553	12
6-1	7-1	1	42	0.134	0.518	6.22	0.021	23.43	0.574	12
7-1	8-1	1	42	0.134	0.384	16.13	0.055	23.37	0.629	12
8-1	9-1	1	16	0.116	0.250	4.00	0.014	23.36	0.642	12
9-1	10-1	1	8	0.134	0.134	1.07	0.004	23.35	0.646	12

MAX. VOLTAGE DROP ON CIRCUIT = MAX ACCUM. VOLT DROP/24 X 100= 2.69%

VOLTAGE DROP CALCULATION - NOTIFICATION CIRCUIT

CKT. # 2

BASED ON POINT TO POINT OHMS CALCULATION - ACCEPTABLE LIMIT 10% @ 24 VOLTS = 2.4 VOLTS MAX.
LINE TO LINE VOLTAGE= 24

FROM START POINT OF RUN	TO END POINT OF RUN	CKT. NO.	RUN LENGTH FEET	DEVICE AMP LOAD	ACCUM. AMP LOAD OF CKT.	AMP. FEET	VOLTS DROP THIS SEGMENT	VOLTAGE AT END OF RUN	ACCUM. VOLT DROP	WIRE SIZE
NAP1A	DSM1	2	2	0.038	0.846	1.69	0.006	23.99	0.006	12
DSM1	1-2	2	136	0.145	0.808	109.89	0.374	23.62	0.379	12
1-2	2-2	2	18	0.116	0.663	11.93	0.041	23.58	0.420	12
2-2	3-2	2	70	0.134	0.547	38.29	0.130	23.45	0.550	12
3-2	4-2	2	56	0.134	0.413	23.13	0.079	23.37	0.629	12
4-2	5-2	2	42	0.145	0.279	11.72	0.040	23.33	0.669	12
5-2	6-2	2	18	0.134	0.134	2.41	0.008	23.32	0.677	12

MAX. VOLTAGE DROP ON CIRCUIT = MAX ACCUM. VOLT DROP/24 X 100= 2.82%

VOLTAGE DROP CALCULATION - NOTIFICATION CIRCUIT

CKT. # 3

BASED ON POINT TO POINT OHMS CALCULATION - ACCEPTABLE LIMIT 10% @ 24 VOLTS = 2.4 VOLTS MAX.
LINE TO LINE VOLTAGE= 24

FROM START POINT OF RUN	TO END POINT OF RUN	CKT. NO.	RUN LENGTH FEET	DEVICE AMP LOAD	ACCUM. AMP LOAD OF CKT.	AMP. FEET	VOLTS DROP THIS SEGMENT	VOLTAGE AT END OF RUN	ACCUM. VOLT DROP	WIRE SIZE
NAP1A	DSM2	1	2	0.038	0.686	1.37	0.005	24.00	0.005	12
DSM2	1-3	1	28	0.116	0.648	16.85	0.057	23.94	0.062	12
1-3	2-3	1	52	0.134	0.532	27.68	0.094	23.84	0.156	12
2-3	3-3	1	22	0.065	0.398	8.76	0.030	23.81	0.186	12
3-3	4-3	1	12	0.065	0.333	4.00	0.014	23.80	0.199	12
4-3	5-3	1	18	0.041	0.268	4.82	0.016	23.78	0.216	12
5-3	6-3	1	18	0.041	0.227	4.09	0.014	23.77	0.230	12
6-3	7-3	1	28	0.041	0.186	5.21	0.018	23.75	0.247	12
7-3	8-3	1	44	0.145	0.145	6.38	0.022	23.73	0.269	12

MAX. VOLTAGE DROP ON CIRCUIT = MAX ACCUM. VOLT DROP/24 X 100= 1.12%

VOLTAGE DROP CALCULATION - NOTIFICATION CIRCUIT

CKT. # 4

BASED ON POINT TO POINT OHMS CALCULATION - ACCEPTABLE LIMIT 10% @ 24 VOLTS = 2.4 VOLTS MAX.
LINE TO LINE VOLTAGE= 24

FROM START POINT OF RUN	TO END POINT OF RUN	CKT. NO.	RUN LENGTH FEET	DEVICE AMP LOAD	ACCUM. AMP LOAD OF CKT.	AMP. FEET	VOLTS DROP THIS SEGMENT	VOLTAGE AT END OF RUN	ACCUM. VOLT DROP	WIRE SIZE
NAP1A	DSM2	4	2	0.038	0.817	1.63	0.006	23.99	0.006	12
DSM2	1-4	4	156	0.041	0.879	137.12	0.466	23.53	0.473	12
1-4	2-4	4	14	0.145	0.838	11.73	0.040	23.49	0.512	12
2-4	3-4	4	13	0.041	0.693	9.01	0.031	23.46	0.543	12
3-4	4-4	4	31	0.116	0.652	20.21	0.069	23.39	0.612	12
4-4	5-4	4	12	0.134	0.536	6.43	0.022	23.37	0.634	12
5-4	6-4	4	68	0.134	0.402	27.34	0.093	23.27	0.727	12
6-4	7-4	4	32	0.134	0.268	8.58	0.029	23.24	0.756	12
7-4	8-4	4	62	0.134	0.134	8.31	0.028	23.22	0.784	12

MAX. VOLTAGE DROP ON CIRCUIT = MAX ACCUM. VOLT DROP/24 X 100= 3.27%

FIRE ALARM DEVICE CALCULATIONS - NAP1A

Battery Calculations for External Device Power

FOR : NAP1B

LOAD IN STANDBY AT 24 VOLTS DC

Device Type	Number of Devices		Current (amps)		Total Current (AMPS)
Main PC Board with AC fail Report Delay Enabled	1	X	0.048	=	0.048
EOL Resistors	4	X	0.011	=	0.044
Aux. Devices	0	X		=	0.000
TOTAL STANDBY LOAD =					0.092

LOAD IN ALARM AT 24 VOLTS DC

Device Type	Number of Devices		Current (amps)		Total Current (AMPS)
Main PC Board with AC fail Report Delay Enabled	1	X	0.048	=	0.048
EOL Resistors	4	X	0.011	=	0.044
Sync. Modules	2	X	0.038	=	0.076
strobe Light (15cd)	5	X	0.041	=	0.205
strobe (75cd)	6	X	0.116	=	0.696
Horn Strobe (15cd)	3	X	0.065	=	0.195
Horn Strobe (75cd)	10	X	0.134	=	1.340
WP Horn	2	X	0.041	=	0.082
TOTAL ALARM LOAD =					2.686

Secondary Power Source Battery Calculations

FOR : NAP1B

Standby Load Current (Amps)		Required Standby Time in Hours (24 or 60 Hours).		Ampere Hours
0.092	X	24	=	2.21
Alarm Load Current (Amps)		**Required Alarm Time in Hours (15 Min.) (i.e. 15 Min. = .25 Hrs.)**		
2.686	X	0.25	=	0.67
Total Standby and Alarm Load in Ampere Hours =				2.88
Ampere Hour Load times 1.2 (Rating Factor) =				3.46
Total Ampere Hour Battery Required =				3.46

NOTE:
USE (2) 7.0 AMPERE HOUR BATTERIES

VOLTAGE DROP CALCULATION - NOTIFICATION CIRCUIT

CKT. # 1

BASED ON POINT TO POINT OHMS CALCULATION - ACCEPTABLE LIMIT 10% @ 24 VOLTS = 2.4 VOLTS MAX.
LINE TO LINE VOLTAGE= 24

FROM START POINT OF RUN	TO END POINT OF RUN	CKT. NO.	RUN LENGTH FEET	DEVICE AMP LOAD	ACCUM. AMP LOAD OF CKT.	AMP. FEET	VOLTS DROP THIS SEGMENT	VOLTAGE AT END OF RUN	ACCUM. VOLT DROP	WIRE SIZE
NAP1B	DSM1	1	2	0.038	1.155	2.31	0.008	23.99	0.008	12
DSM1	1-1	1	16	0.041	1.117	17.87	0.061	23.93	0.069	12
1-1	2-1	1	22	0.134	1.076	23.67	0.081	23.85	0.149	12
2-1	3-1	1	48	0.065	0.942	45.22	0.154	23.70	0.303	12
3-1	4-1	1	14	0.116	0.877	12.28	0.042	23.66	0.345	12
4-1	5-1	1	32	0.134	0.761	24.35	0.083	23.57	0.427	12
5-1	6-1	1	12	0.116	0.627	7.52	0.026	23.55	0.453	12
6-1	7-1	1	82	0.134	0.511	31.68	0.108	23.44	0.561	12
7-1	8-1	1	65	0.116	0.377	24.51	0.083	23.36	0.644	12
8-1	9-1	1	68	0.145	0.261	17.75	0.060	23.30	0.705	12
9-1	10-1	1	16	0.116	0.116	1.86	0.006	23.29	0.711	12

MAX. VOLTAGE DROP ON CIRCUIT = MAX ACCUM. VOLT DROP/24 X 100= 2.96%

VOLTAGE DROP CALCULATION - NOTIFICATION CIRCUIT

CKT. # 2

BASED ON POINT TO POINT OHMS CALCULATION - ACCEPTABLE LIMIT 10% @ 24 VOLTS = 2.4 VOLTS MAX.
LINE TO LINE VOLTAGE= 24

FROM START POINT OF RUN	TO END POINT OF RUN	CKT. NO.	RUN LENGTH FEET	DEVICE AMP LOAD	ACCUM. AMP LOAD OF CKT.	AMP. FEET	VOLTS DROP THIS SEGMENT	VOLTAGE AT END OF RUN	ACCUM. VOLT DROP	WIRE SIZE
NAP1B	DSM1	2	2	0.038	0.843	1.69	0.006	23.99	0.008	12
DSM1	1-2	2	36	0.065	0.805	28.98	0.099	23.90	0.104	12
1-2	2-2	2	26	0.041	0.740	19.24	0.065	23.83	0.170	12
2-2	3-2	2	12	0.116	0.699	6.39	0.029	23.80	0.199	12
3-2	4-2	2	38	0.065	0.583	22.15	0.075	23.73	0.274	12
4-2	5-2	2	60	0.134	0.518	31.08	0.106	23.62	0.379	12
5-2	6-2	2	20	0.116	0.384	7.68	0.026	23.59	0.405	12
6-2	7-2	2	45	0.134	0.268	12.06	0.041	23.55	0.446	12
7-2	8-2	2	28	0.134	0.134	3.75	0.000	23.55	0.446	

MAX. VOLTAGE DROP ON CIRCUIT = MAX ACCUM. VOLT DROP/24 X 100= 1.86%

VOLTAGE DROP CALCULATION - NOTIFICATION CIRCUIT

CKT. # 3

BASED ON POINT TO POINT OHMS CALCULATION - ACCEPTABLE LIMIT 10% @ 24 VOLTS = 2.4 VOLTS MAX.
LINE TO LINE VOLTAGE= 24

FROM START POINT OF RUN	TO END POINT OF RUN	CKT. NO.	RUN LENGTH FEET	DEVICE AMP LOAD	ACCUM. AMP LOAD OF CKT.	AMP. FEET	VOLTS DROP THIS SEGMENT	VOLTAGE AT END OF RUN	ACCUM. VOLT DROP	WIRE SIZE
NAP1B	DSM2	3	2	0.038	0.824	1.65	0.006	23.99	0.008	12
DSM2	1-3	3	112	0.134	0.786	88.03	0.299	23.70	0.305	12
1-3	2-3	3	50	0.145	0.652	32.60	0.111	23.58	0.416	12
2-3	3-3	3	78	0.041	0.507	39.55	0.134	23.45	0.550	12
3-3	4-3	3	15	0.041	0.466	6.99	0.024	23.43	0.574	12
4-3	5-3	3	10	0.041	0.425	4.25	0.014	23.41	0.589	12
5-3	6-3	3	63	0.134	0.384	21.00	0.073	23.34	0.662	12
6-3	7-3	3	46	0.116	0.250	11.50	0.039	23.30	0.701	12
7-3	8-3	3	62	0.134	0.134	8.31	0.000	23.30	0.701	

MAX. VOLTAGE DROP ON CIRCUIT = MAX ACCUM. VOLT DROP/24 X 100= 2.92%

FIRE ALARM DEVICE CALCULATIONS - NAP1B

Battery Calculations for External Device Power

FOR : NAP2A

LOAD IN STANDBY AT 24 VOLTS DC

Device Type	Number of Devices		Current (amps)		Total Current (AMPS)
Main PC Board with AC fail Report Delay Enabled	1	X	0.048	=	0.048
EOL Resistors	4	X	0.011	=	0.044
Aux. Devices	0	X		=	0.000
TOTAL STANDBY LOAD =					0.092

LOAD IN ALARM AT 24 VOLTS DC

Device Type	Number of Devices		Current (amps)		Total Current (AMPS)
Main PC Board with AC fail Report Delay Enabled	1	X	0.048	=	0.048
EOL Resistors	4	X	0.011	=	0.044
Sync. Modules	2	X	0.038	=	0.076
strobe Light (15cd)	3	X	0.041	=	0.123
strobe (75cd)	2	X	0.116	=	0.232
Horn Strobe (15cd)	2	X	0.065	=	0.130
Horn Strobe (75cd)	16	X	0.134	=	2.144
WP Horn	4	X	0.041	=	0.164
TOTAL ALARM LOAD =					2.961

Secondary Power Source Battery Calculations

FOR : NAP2A

Standby Load Current (Amps)		Required Standby Time in Hours (24 or 60 Hours).		Ampere Hours
0.092	X	24	=	2.21
Alarm Load Current (Amps)		**Required Alarm Time in Hours (15 Min.) (i.e. 15 Min. = .25 Hrs.)**		
2.961	X	0.25	=	0.74
Total Standby and Alarm Load in Ampere Hours =				2.95
Ampere Hour Load times 1.2 (Rating Factor) =				3.54
Total Ampere Hour Battery Required =				3.54

NOTE:
USE (2) 7.0 AMPERE HOUR BATTERIES

VOLTAGE DROP CALCULATION - NOTIFICATION CIRCUIT

CKT. # 1

BASED ON POINT TO POINT OHMS CALCULATION - ACCEPTABLE LIMIT 10% @ 24 VOLTS = 2.4 VOLTS MAX.
LINE TO LINE VOLTAGE= 24

FROM START POINT OF RUN	TO END POINT OF RUN	CKT. NO.	RUN LENGTH FEET	DEVICE AMP LOAD	ACCUM. AMP LOAD OF CKT.	AMP. FEET	VOLTS DROP THIS SEGMENT	VOLTAGE AT END OF RUN	ACCUM. VOLT DROP	WIRE SIZE
NAP2A	DSM1	1	2	0.038	1.307	2.61	0.009	23.99	0.009	12
DSM1	1-1	1	30	0.134	1.269	38.07	0.129	23.86	0.138	12
1-1	2-1	1	40	0.134	1.135	45.40	0.154	23.71	0.293	12
2-1	3-1	1	24	0.134	1.001	24.02	0.082	23.63	0.374	12
3-1	4-1	1	24	0.041	0.867	20.81	0.071	23.55	0.445	12
4-1	5-1	1	14	0.134	0.826	11.56	0.039	23.52	0.485	12
5-1	6-1	1	16	0.145	0.692	12.46	0.042	23.47	0.527	12
6-1	7-1	1	46	0.134	0.547	25.16	0.086	23.39	0.612	12
7-1	8-1	1	58	0.134	0.413	23.13	0.079	23.31	0.691	12
8-1	9-1	1	14	0.145	0.279	3.91	0.013	23.30	0.704	12
9-1	10-1	1	36	0.134	0.134	4.82	0.016	23.28	0.721	12

MAX. VOLTAGE DROP ON CIRCUIT = MAX ACCUM. VOLT DROP/24 X 100= 3.00%

VOLTAGE DROP CALCULATION - NOTIFICATION CIRCUIT

CKT. # 2

BASED ON POINT TO POINT OHMS CALCULATION - ACCEPTABLE LIMIT 10% @ 24 VOLTS = 2.4 VOLTS MAX.
LINE TO LINE VOLTAGE= 24

FROM START POINT OF RUN	TO END POINT OF RUN	CKT. NO.	RUN LENGTH FEET	DEVICE AMP LOAD	ACCUM. AMP LOAD OF CKT.	AMP. FEET	VOLTS DROP THIS SEGMENT	VOLTAGE AT END OF RUN	ACCUM. VOLT DROP	WIRE SIZE
NAP2A	DSM1	2	2	0.038	1.096	2.19	0.007	23.99	0.007	12
DSM1	1-2	2	83	0.134	1.058	87.81	0.299	23.69	0.306	12
1-2	2-2	2	40	0.116	0.924	36.96	0.126	23.57	0.432	12
2-2	3-2	2	24	0.134	0.808	19.39	0.066	23.50	0.498	12
3-2	4-2	2	72	0.145	0.674	48.53	0.165	23.34	0.663	12
4-2	5-2	2	40	0.134	0.529	21.16	0.072	23.27	0.735	12
5-2	6-2	2	14	0.134	0.395	5.53	0.019	23.25	0.754	12
6-2	7-2	2	32	0.116	0.261	8.35	0.028	23.22	0.782	12
7-2	8-2	2	18	0.145	0.145	2.61	0.009	23.21	0.791	12

MAX. VOLTAGE DROP ON CIRCUIT = MAX ACCUM. VOLT DROP/24 X 100= 3.30%

VOLTAGE DROP CALCULATION - NOTIFICATION CIRCUIT

CKT. # 3

BASED ON POINT TO POINT OHMS CALCULATION - ACCEPTABLE LIMIT 10% @ 24 VOLTS = 2.4 VOLTS MAX.
LINE TO LINE VOLTAGE= 24

FROM START POINT OF RUN	TO END POINT OF RUN	CKT. NO.	RUN LENGTH FEET	DEVICE AMP LOAD	ACCUM. AMP LOAD OF CKT.	AMP. FEET	VOLTS DROP THIS SEGMENT	VOLTAGE AT END OF RUN	ACCUM. VOLT DROP	WIRE SIZE
NAP2A	DSM2	3	2	0.038	0.831	1.66	0.006	23.99	0.006	12
DSM2	1-3	3	155	0.134	0.893	138.42	0.471	23.52	0.477	12
1-3	2-3	3	9	0.134	0.759	8.07	0.031	23.50	0.498	12
2-3	3-3	3	35	0.134	0.625	22.50	0.077	23.43	0.574	12
3-3	4-3	3	65	0.134	0.491	31.92	0.109	23.32	0.683	12
4-3	5-3	3	22	0.065	0.357	7.85	0.027	23.29	0.709	12
5-3	6-3	3	14	0.041	0.292	4.09	0.014	23.28	0.723	12
6-3	7-3	3	62	0.145	0.251	15.56	0.053	23.22	0.776	12
7-3	8-3	3	36	0.041	0.106	3.82	0.013	23.21	0.789	12
8-3	9-3	3	50	0.065	0.065	3.25	0.011	23.20	0.800	12

MAX. VOLTAGE DROP ON CIRCUIT = MAX ACCUM. VOLT DROP/24 X 100= 3.33%

FIRE ALARM DEVICE CALCULATIONS - NAP2A

Battery Calculations for External Device Power

FOR : NAP2B

LOAD IN STANDBY AT 24 VOLTS DC

Device Type	Number of Devices		Current (amps)		Total Current (AMPS)
Main PC Board with AC fail Report Delay Enabled	1	X	0.048	=	0.048
EOL Resistors	4	X	0.011	=	0.044
Aux. Devices	0	X		=	0.000
TOTAL STANDBY LOAD =					0.092

LOAD IN ALARM AT 24 VOLTS DC

Device Type	Number of Devices		Current (amps)		Total Current (AMPS)
Main PC Board with AC fail Report Delay Enabled	1	X	0.048	=	0.048
EOL Resistors	4	X	0.011	=	0.044
Sync. Modules	2	X	0.038	=	0.076
strobe Light (15cd)	3	X	0.041	=	0.123
strobe (75cd)	0	X	0.116	=	0.000
Horn Strobe (15cd)	2	X	0.065	=	0.130
Horn Strobe (75cd)	14	X	0.134	=	1.876
WP Horn	1	X	0.041	=	0.041
TOTAL ALARM LOAD =					2.338

Secondary Power Source Battery Calculations

FOR : NAP2B

Standby Load Current (Amps)		Required Standby Time in Hours (24 or 60 Hours).		Ampere Hours
0.092	X	24	=	2.21
Alarm Load Current (Amps)		**Required Alarm Time in Hours (15 Min.) (i.e. 15 Min. = .25 Hrs.)**		
2.338	X	0.25	=	0.58
Total Standby and Alarm Load in Ampere Hours =				2.79
Ampere Hour Load times 1.2 (Rating Factor) =				3.35
Total Ampere Hour Battery Required =				3.35

NOTE:
USE (2) 7.0 AMPERE HOUR BATTERIES

VOLTAGE DROP CALCULATION - NOTIFICATION CIRCUIT

CKT. # 1

BASED ON POINT TO POINT OHMS CALCULATION - ACCEPTABLE LIMIT 10% @ 24 VOLTS = 2.4 VOLTS MAX.
LINE TO LINE VOLTAGE= 24

FROM START POINT OF RUN	TO END POINT OF RUN	CKT. NO.	RUN LENGTH FEET	DEVICE AMP LOAD	ACCUM. AMP LOAD OF CKT.	AMP. FEET	VOLTS DROP THIS SEGMENT	VOLTAGE AT END OF RUN	ACCUM. VOLT DROP	WIRE SIZE
NAP2B	DSM1	1	2	0.038	0.639	1.28	0.004	24.00	0.004	12
DSM1	1-1	1	12	0.134	0.601	7.21	0.025	23.97	0.029	12
1-1	2-1	1	48	0.134	0.467	22.42	0.076	23.89	0.105	12
2-1	3-1	1	65	0.134	0.333	21.65	0.074	23.82	0.179	12
3-1	4-1	1	48	0.134	0.199	9.55	0.032	23.79	0.211	12
4-1	5-1	1	36	0.065	0.065	2.34	0.008	23.78	0.219	12
										12
										12
										12
										12
										12
										12
										12

MAX. VOLTAGE DROP ON CIRCUIT = MAX ACCUM. VOLT DROP/24 X 100= 0.91%

VOLTAGE DROP CALCULATION - NOTIFICATION CIRCUIT

CKT. # 2

BASED ON POINT TO POINT OHMS CALCULATION - ACCEPTABLE LIMIT 10% @ 24 VOLTS = 2.4 VOLTS MAX.
LINE TO LINE VOLTAGE= 24

FROM START POINT OF RUN	TO END POINT OF RUN	CKT. NO.	RUN LENGTH FEET	DEVICE AMP LOAD	ACCUM. AMP LOAD OF CKT.	AMP. FEET	VOLTS DROP THIS SEGMENT	VOLTAGE AT END OF RUN	ACCUM. VOLT DROP	WIRE SIZE
NAP2B	DSM1	2	2	0.038	0.894	1.79	0.006	23.99	0.006	12
DSM1	1-2	2	38	0.134	0.856	32.53	0.111	23.88	0.117	12
1-2	2-2	2	29	0.134	0.722	20.84	0.071	23.81	0.188	12
2-2	3-2	2	28	0.134	0.588	16.46	0.056	23.76	0.244	12
3-2	4-2	2	24	0.134	0.454	10.90	0.037	23.72	0.281	12
4-2	5-2	2	32	0.145	0.320	10.24	0.035	23.68	0.316	12
5-2	6-2	2	22	0.041	0.175	3.85	0.013	23.67	0.329	12
6-2	7-2	2	29	0.134	0.134	3.89	0.013	23.66	0.342	12

MAX. VOLTAGE DROP ON CIRCUIT = MAX ACCUM. VOLT DROP/24 X 100= 1.43%

VOLTAGE DROP CALCULATION - NOTIFICATION CIRCUIT

CKT. # 3

BASED ON POINT TO POINT OHMS CALCULATION - ACCEPTABLE LIMIT 10% @ 24 VOLTS = 2.4 VOLTS MAX.
LINE TO LINE VOLTAGE= 24

FROM START POINT OF RUN	TO END POINT OF RUN	CKT. NO.	RUN LENGTH FEET	DEVICE AMP LOAD	ACCUM. AMP LOAD OF CKT.	AMP. FEET	VOLTS DROP THIS SEGMENT	VOLTAGE AT END OF RUN	ACCUM. VOLT DROP	WIRE SIZE
NAP2B	DSM2	3	2	0.038	0.824	1.85	0.006	23.99	0.006	12
DSM2	1-3	3	34	0.041	0.886	30.12	0.102	23.89	0.109	12
1-3	2-3	3	18	0.134	0.845	15.21	0.052	23.84	0.160	12
2-3	3-3	3	25	0.134	0.711	17.78	0.060	23.78	0.221	12
3-3	4-3	3	38	0.134	0.577	21.93	0.075	23.70	0.295	12
4-3	5-3	3	38	0.134	0.443	16.83	0.057	23.65	0.353	12
5-3	6-3	3	52	0.041	0.309	16.07	0.055	23.59	0.407	12
6-3	7-3	3	60	0.134	0.268	16.08	0.055	23.54	0.462	12
7-3	8-3	3	10	0.134	0.134	1.34	0.005	23.53	0.467	12

MAX. VOLTAGE DROP ON CIRCUIT = MAX ACCUM. VOLT DROP/24 X 100= 1.94%

FIRE ALARM DEVICE CALCULATIONS - NAP2B

tBP
architecture
planning
interiors
management

tBP/architecture
1000 Burnett Ave, Suite 140
Concord, CA 94520
ph 9252466495 fx 9252466495

architect

CONSULTING ENGINEERS
2660 Crow Canyon Rd. Suite 100
San Ramon, CA 94583
(415) 247-8700
FAX (415) 247-8711
twfelf@pacbell.net

TWF #03007.00

consultant

REGISTERED PROFESSIONAL ENGINEER No. 7650 Exp. 06/30/2006 STATE OF CALIFORNIA

REGISTERED ARCHITECT M. CHRISTO

SHEET NOTES

1. THIS PLAN IS FOR FIRE ALARM COMMUNICATIONS CONNECTIONS FOR THE COLLEGE CAMPUS ONLY.

2. SPRINKLER RISER POINTS, SEE FLOOR PLANS FOR CONNECTIONS.

3. FIRE DEPT. DET. CHECK VALVES. PROVIDE MONITOR MODULE AND CONNECT INTO THE FIRE ALARM SYSTEM. RUN ALARM WIRING UNDERGROUND TO THE BUILDING AND CONNECT INTO THE ALARM LOOP. MONITOR MODULE SHALL BE INSTALLED IN A WEATHERPROOF BOX. SEE FLOOR PLANS FOR WIRING.

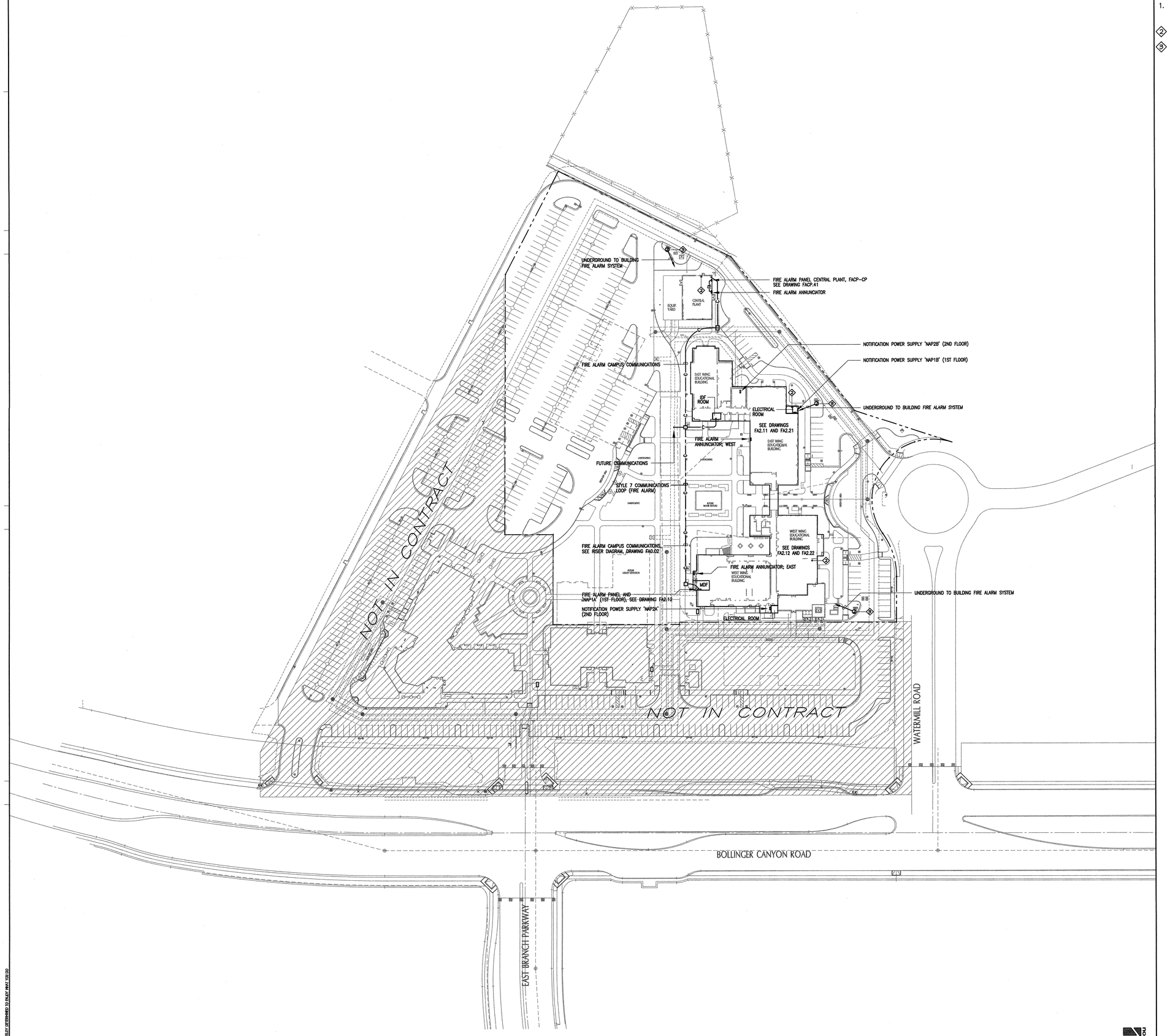

FIRE ALARM SITE PLAN | 1
SCALE: 1" = 80'

tBP
architecture
planning
interiors
management

LICENSED ARCHITECT ROBERT A. MARSHALL, A.I.A. No. C-9855 REGISTERED CALIFORNIA STATE OF CALIFORNIA

tBP/Architecture
1000 Burnett Ave, Suite 140
Concord, CA 94520
ph: 9252466419 fx: 9252466495

architect

LICENSED PROFESSIONAL ENGINEER No. 7650 REGISTERED CIVIL ENGINEER STATE OF CALIFORNIA

CONSULTING ENGINEERS
282 Second Street, 3rd Floor
San Francisco, CA 94105
PH (415) 247-8711
FAX (415) 247-8711
twf.sf@pacbell.net

TOFT WOLFF FARROW Inc.

TWF #03007.00

consultant

DIV. OF THE STATE ARCHITECT
OFFICE OF REGULATION SERVICES
APPL NO. 1-107119
BY: [signature]
DATE: 4-15-05

agency

SAN RAMON VALLEY CENTER

CONTRA COSTA COMMUNITY COLLEGE DISTRICT

SAN RAMON, CALIFORNIA

owner

tBP project number : 2021.00
file name: .
drawn by: ABC checked by:
date: 03-09-04 plot scale: 1:1

Rev.	date:	description:
1	03-09-04	DSA BACKCHECK

drawing title: FIRE ALARM SITE PLAN
building no: .
drawing no: FA0.04
drawing . of

BE ABSOLUTELY ASSURED TO ENJOY WHAT YOU DO

134

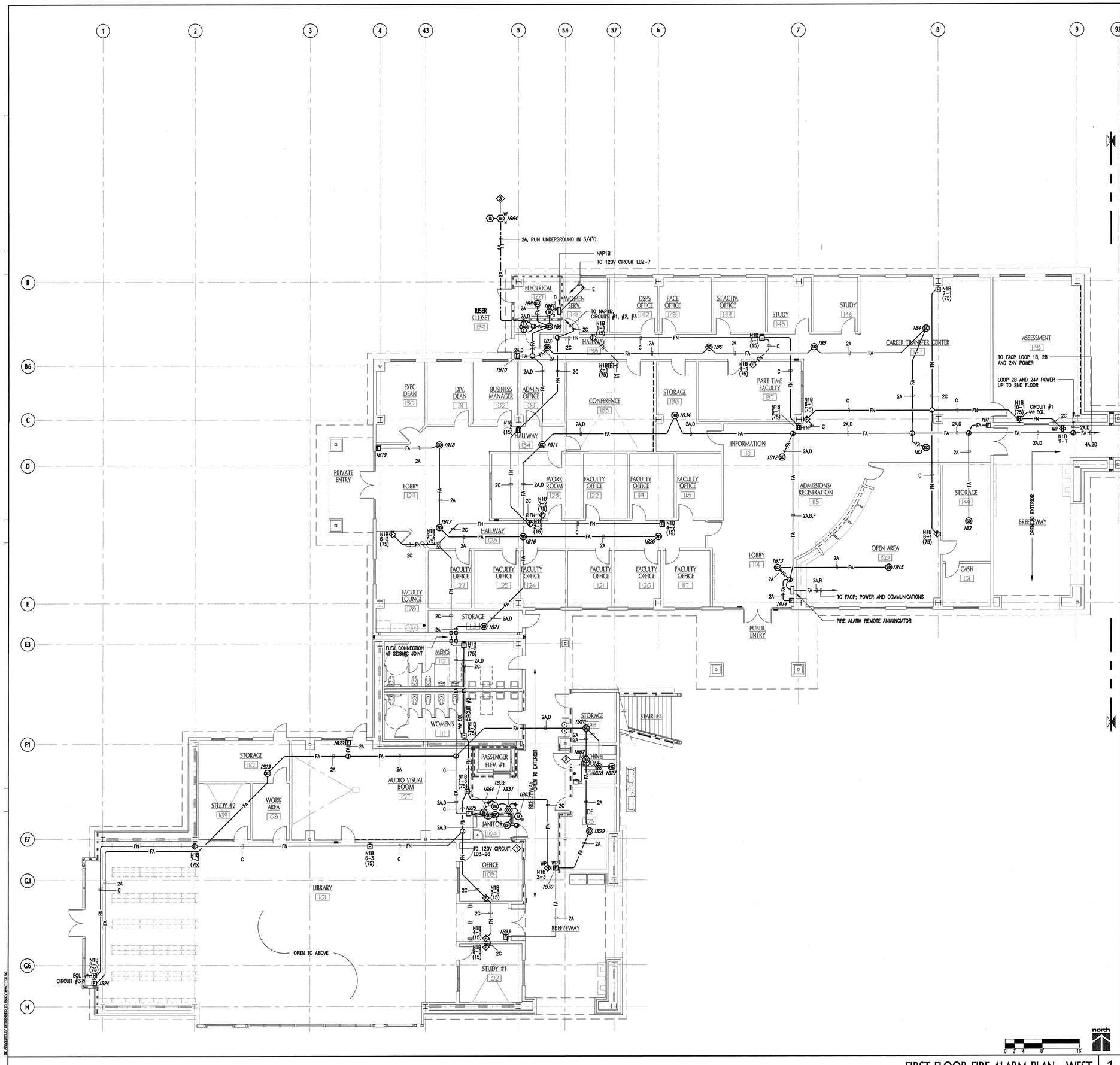

FIRST FLOOR FIRE ALARM PLAN - WEST
SCALE: 1/8" = 1'-0"

1

SHEET NOTES

1. FIRE SMOKE DAMPERS AT FLOOR PENETRATION; SEE MECHANICAL DRAWINGS FOR EXACT LOCATION. PROVIDE DUCT SMOKE DETECTORS WITH SMOKE INDICATOR LAMPS.
2. TIE TO SHUNT TRIP OF ELEVATOR CIRCUIT BREAKER, 2#12.
3. MONITOR MODULE FOR DETECTOR CHECK VALVE (TAMPER) ; INSTALL IN WEATHERPROOF ENCLOSURE. SEE FIRE ALARM SITE PLAN FA0.04 FOR LOCATION, COORDINATE WITH CIVIL DRAWINGS.

KEY PLAN

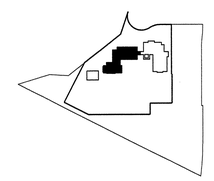

tBP
architecture planning interiors management

tBP/Architecture
1000 Burnett Ave, Suite 140
Concord, CA 94520
ph: 925.246.6419 fx: 925.246.6495

architect

CONSULTING ENGINEERS
282 Second Street, 3rd Floor
San Francisco, CA 94105
TEL (415) 247-8700
FAX (415) 247-8711
twfsf@pacbell.net

TOFT WOLFF FARROW Inc.

TWF #03007.00

consultant

DENTIFICATION STAMP
DIV. OF THE STATE ARCHITECT
OFFICE OF REGULATION SERVICES
APPL NO. 105719
AC-
FLS.
DATE

agency

SAN RAMON VALLEY CENTER

CONTRA COSTA COMMUNITY COLLEGE DISTRICT

SAN RAMON, CALIFORNIA

owner

tBP project number : 20212.00

file name: .

drawn by: ABC checked by:

date: 03-09-04 plot scale: 1:1

Rev:	date:	description:
1	03-09-04	DSA BACKCHECK

drawing title: building no: .

FIRST FLOOR - WEST
FIRE ALARM PLAN

drawing no:

FA2.11

drawing . of

145

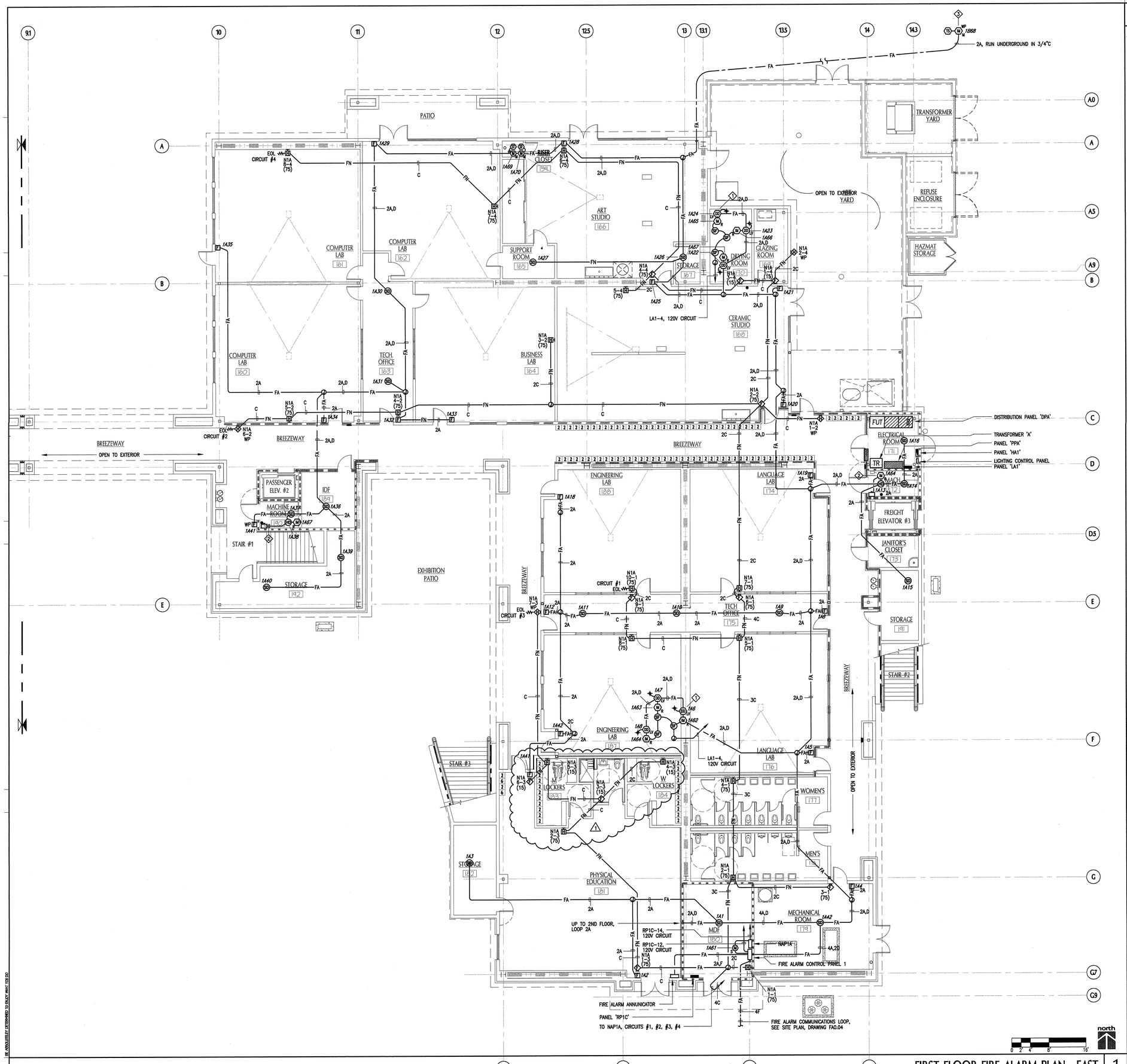

FIRST FLOOR FIRE ALARM PLAN - EAST 1

SCALE: 1/8" = 1'-0"

SHEET NOTES

1. FIRE SMOKE DAMPERS AT FLOOR PENETRATION; SEE MECHANICAL DRAWINGS FOR EXACT LOCATION. PROVIDE DUCT SMOKE DETECTORS WITH SMOKE INDICATOR LAMPS.
2. TIE TO SHUNT TRIP OF ELEVATOR CIRCUIT BREAKER, 2#12.
3. MONITOR MODULE FOR DETECTOR CHECK VALVE (TAMPER) ; INSTALL IN WEATHERPROOF ENCLOSURE. SEE FIRE ALARM SITE PLAN FA0.04 FOR LOCATION, COORDINATE WITH CIVIL DRAWINGS.

KEY PLAN

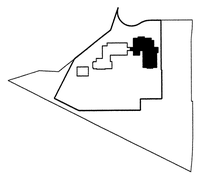

tBP architecture planning interiors management

tBP/Architecture
1000 Burnett Ave, Suite 140
Concord, CA 94520
ph: 925.246.6419 fx: 925.246.6495

architect

CONSULTING ENGINEERS
282 Second Street, 3rd Floor
San Francisco, CA 94105
TEL (415) 247-8700
FAX (415) 247-8711
twfsf@pacbell.net

TOFT WOLFF FARROW Inc.

TWF #03007.00

consultant

agency

SAN RAMON VALLEY CENTER

CONTRA COSTA COMMUNITY COLLEGE DISTRICT

SAN RAMON, CALIFORNIA

owner

tBP project number : 20212.00

file name: .

drawn by: ABC checked by:

date: 03-09-04 plot scale: 1:1

Rev:	date:	description:
1	03-09-04	DSA BACKCHECK

drawing title: building no: .

FIRST FLOOR - EAST
FIRE ALARM PLAN

drawing no:

FA2.12

drawing . of

136

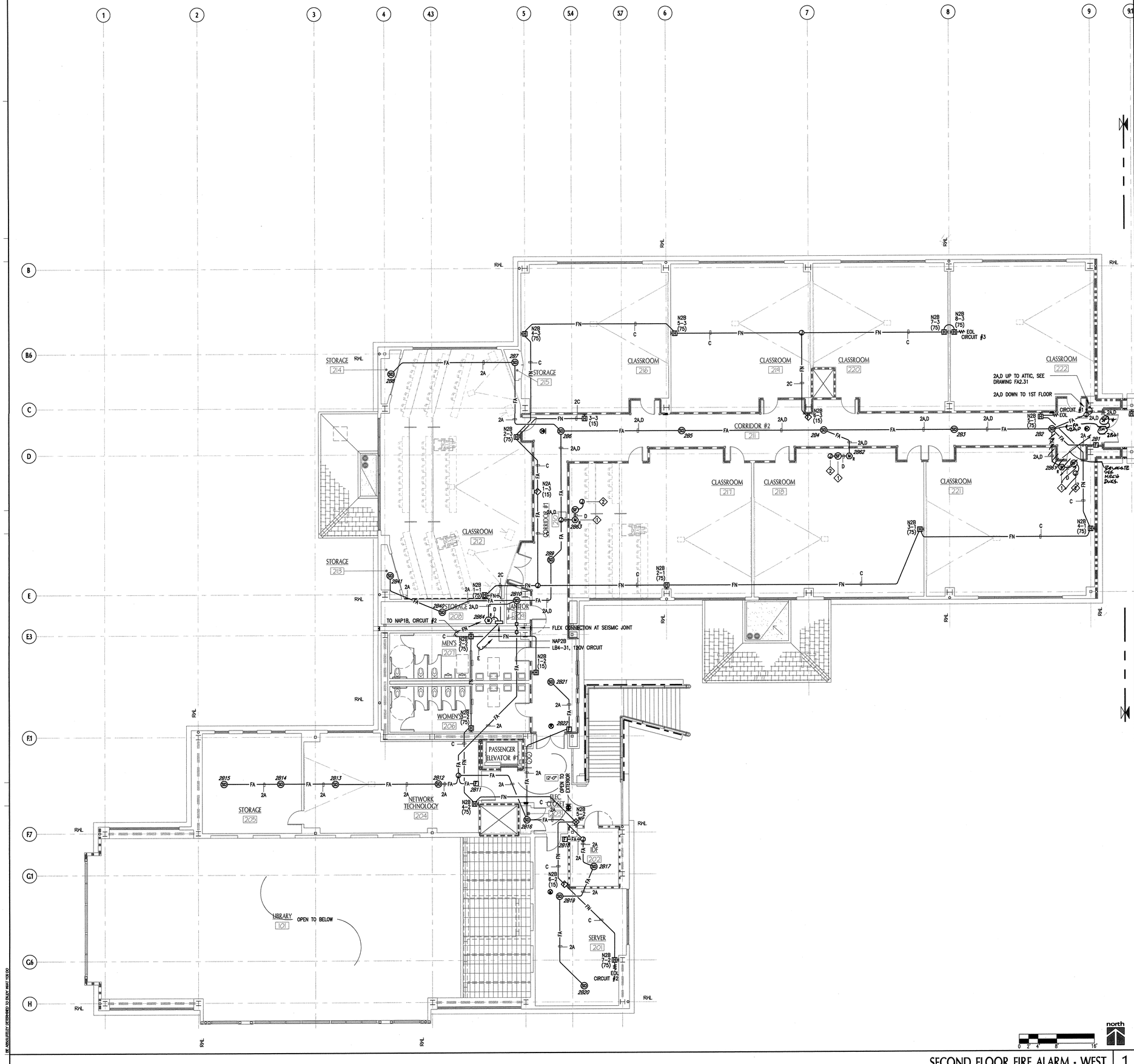

SECOND FLOOR FIRE ALARM - WEST 1
SCALE: 1/8" = 1'-0"

SHEET NOTES

1. FIRE SMOKE DAMPERS IN WALL SHALL CLOSE UPON ANY CORRIDOR 1 OR 2 SMOKE DETECTOR ACTIVATION.
2. JUNCTION BOX FOR FIRE SMOKE DAMPER CIRCUIT. SEE POWER PLAN, CIRCUIT LB4-33.

KEY PLAN

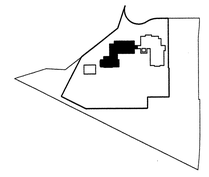

tBP
architecture
planning
interiors
management

tBP/Architecture
1000 Burnett Ave, Suite 140
Concord, CA 94520
ph: 925.246.6419 fx: 925.246.6495

architect

CONSULTING ENGINEERS
282 Second Street, 3rd Floor
San Francisco, CA 94105
TEL (415) 247-8700
FAX (415) 247-8711
twfsf@pacbell.net

TOFT WOLFF FARROW Inc.

TWF #03007.00

consultant

DENTIFICATION STAMP
DIV. OF THE STATE ARCHITECT
OFFICE OF REGULATION SERVICES
APPL. NO. 105719
AC FLS. SS
DATE

agency

SAN RAMON VALLEY CENTER

CONTRA COSTA COMMUNITY COLLEGE DISTRICT

SAN RAMON, CALIFORNIA

owner

tBP project number : 20212.00

file name: .

drawn by: ABC checked by:

date: 03-04-04 plot scale: 1:1

Rev:	date:	description:
1	03-09-04	DSA BACKCHECK

drawing title: building no: .

SECOND FLOOR - WEST FIRE ALARM PLAN

drawing no:

FA2.21

drawing . of

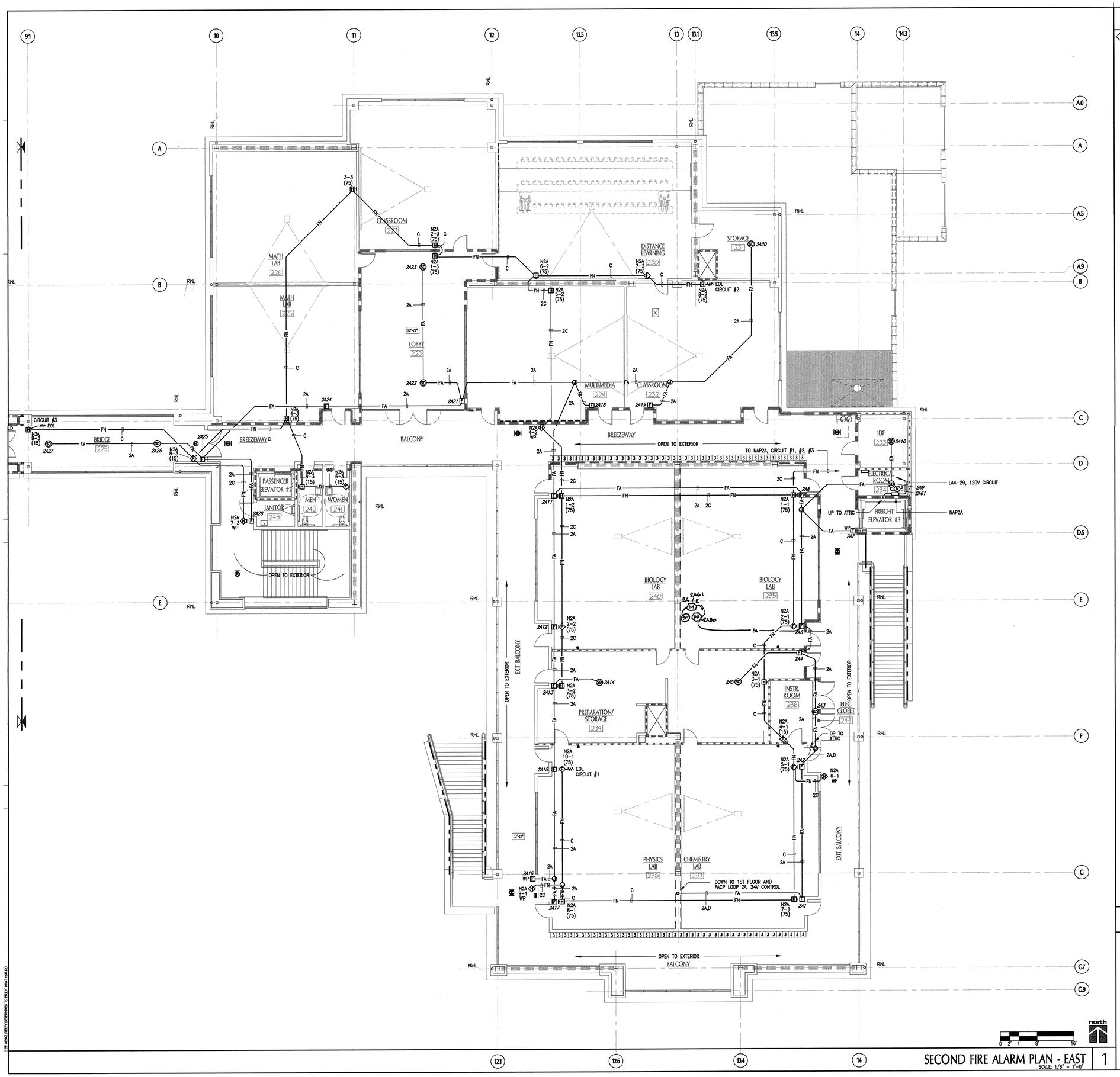

SECOND FIRE ALARM PLAN - EAST
SCALE: 1/8" = 1'-0"

1

SHEET NOTES

1 --

KEY PLAN

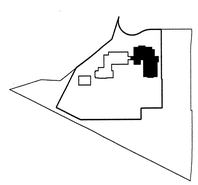

tBP
architecture
planning
interiors
management

tBP/Architecture
1000 Burnett Ave, Suite 140
Concord, CA 94520
ph: 925.246.6419 fx: 925.246.6495

architect

CONSULTING ENGINEERS
282 Second Street, 3rd Floor
San Francisco, CA 94105
TEL (415) 247-8700
FAX (415) 247-8711
twfsf@pacbell.net

TOFT WOLFF FARROW Inc.

TWF #03007.00

consultant

agency

SAN RAMON VALLEY CENTER

CONTRA COSTA COMMUNITY COLLEGE DISTRICT

SAN RAMON, CALIFORNIA

owner

tBP project number : 20212.00

file name: .

drawn by: ABC checked by:

date: 03-09-04 plot scale: 1:1

Rev.	date:	description:
1	03-09-04	DSA BACKCHECK

drawing title: building no: .

SECOND FLOOR - EAST
FIRE ALARM PLAN

drawing no:

FA2.22

drawing . of

SHEET NOTES

1. CONNECT TO SHUTDOWN AIR HANDLER WHEN ASSOCIATED DUCT SMOKE DETECTOR GOES INTO ALARM.
2. PROVIDE FLEXIBLE CONNECTION CROSSING SIESMIC JOINT.

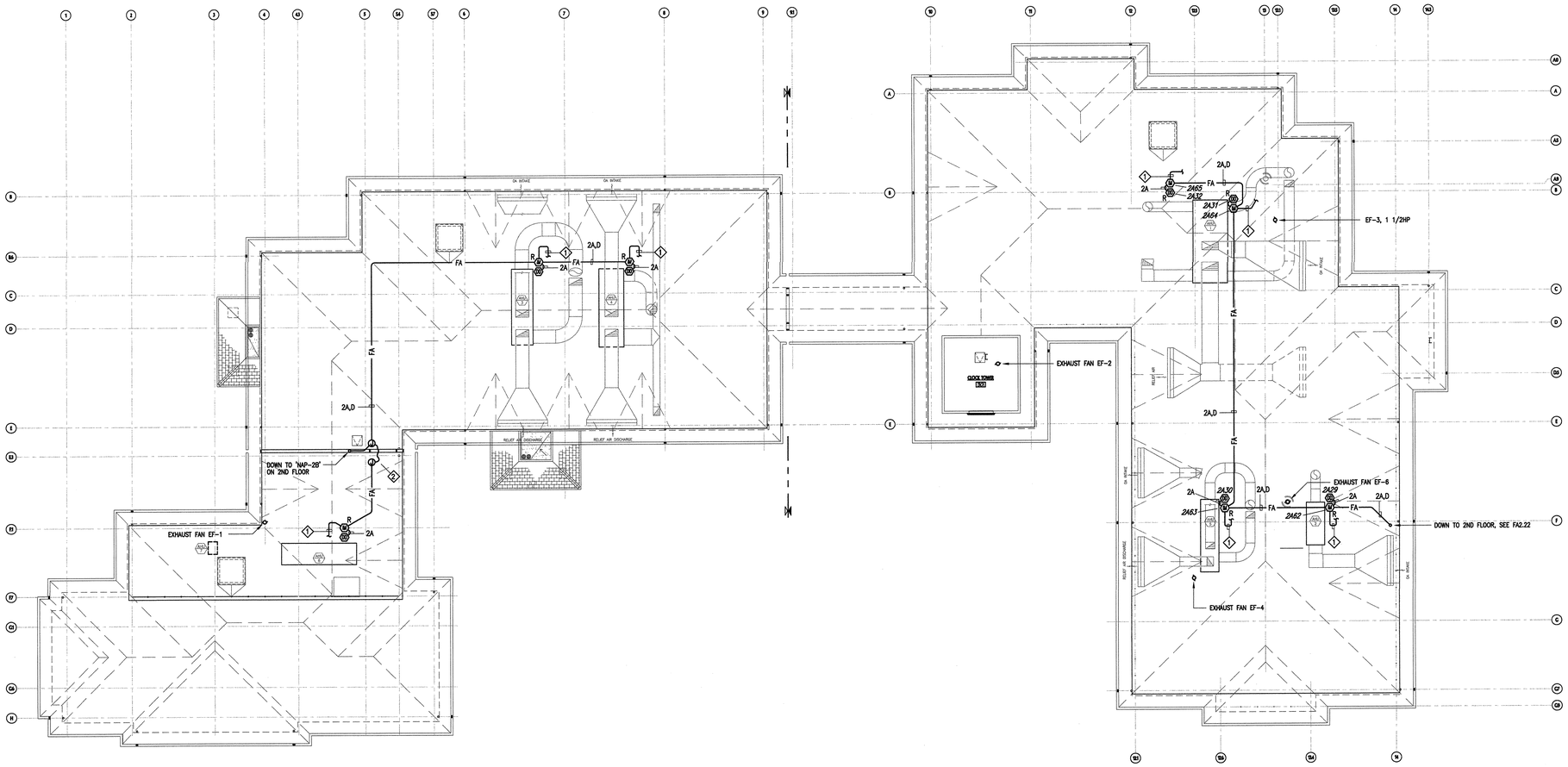

WEST

EAST

0 2 4 8 16'

north

ATTIC FIRE ALARM PLAN
SCALE: 1/16" = 1'-0"

1

KEY PLAN

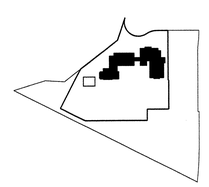

tBP
architecture
planning
interiors
management

tBP/Architecture
1000 Burnett Ave, Suite 140
Concord, CA 94520
ph: 9252466419 fx: 9252466495

architect

CONSULTING ENGINEERS
1827 Second Street, Suite 100
Berkeley, CA 94710
TEL (415) 247-8700
FAX (415) 247-8711
twfsf@pacbell.net

TOFFT WOLFF FARROW Inc.

TWF #03007.00

consultant

IDENTIFICATION STAMP
DIVISION OF THE STATE ARCHITECT
OFFICE OF REGULATION SERVICES
APPL. NO. 10S719
BY: [signature] DATE: 3/25/04

agency

SAN RAMON VALLEY CENTER
CONTRA COSTA COMMUNITY COLLEGE DISTRICT
SAN RAMON, CALIFORNIA

owner

tBP project number : 20212.00
file name: .
drawn by: ABC checked by:
date: 03-09-04 plot scale: 1:1

Rev:	date:	description:
1	03-09-04	DSA BACKCHECK

drawing title: ATTIC FIRE ALARM PLAN
building no: .

drawing no: FA2.31
drawing . of

BE ABSOLUTELY DETERMINED TO ENJOY. MMX 109.00

139

FIRE ALARM FACP-CP BATTERY CALCULATIONS

BASED ON Siemens MXL PANEL

Siemens #	QTY	Standby Current	Alarm Current	Standby Total	% In Alarm	Alarm Total	Project: Contra Costa Community College,San Ramon,CA
MMB-2 Main Board	1	0.1750	0.1750	0.175	100%	0.175	
ALD-1 Loop 1 (1.1mA per device)	60	0.0011	0.0011	0.066	100%	0.066	
5128 Digital Fire Communicator	1	0.0840	0.0840	0.084	100%	0.084	
MKB-2 Control Keypad Annunciator	1	0.0050	0.0050	0.005	100%	0.005	
RCC-1F Remote command center	1	0.0800	0.0800	0.080	100%	0.080	
MOM -4	1	0.0300	0.1200	0.030	100%	0.120	
NAC circuit #1	1	0.0120	0.7180	0.012	100%	0.718	
NIM-1W Communications	1	0.0700	0.0700	0.070	100%	0.070	
		TOTAL	STANDBY	0.522			
		TOTAL	ALARM			1.318	

HOURS OF STAND-BY	24	0.522		12.5280	TOTAL STANDBY
MINUTES IN ALARM (5)	5	1.318	0.0833	0.1098	ALARM A.H.
				12.6378	SUB-TOTAL
Note: ALD-1 calculated at max. devices per loop				X 1.25	
				15.7973	TOTAL A.H. NEEDED

Provide 18 amp hour batteries

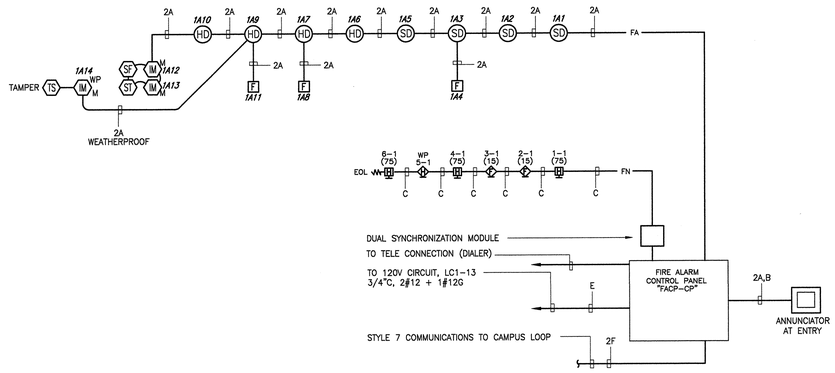

A FACP.41

FIRE ALARM RISER DIAGRAM, CENTRAL PLANT

NOT TO SCALE

SHEET NOTES

1. REFER TO DRAWING FA0.01 FOR SYMBOLS, WIRING LEGEND AN GENERAL NOTES.
2. REFER TO DRAWING FA0.02 FOR TYPICAL POINT TO POINT WIRING DIAGRAM.
3. REFER TO DRAWING FA0.04 FOR FIRE ALARM SITE PLAN.

4 MONITOR MODULE FOR DETECTOR CHECK VALVE (TAMPER). INSTALL IN WEATHERPROOF ENCLOCURE. SEE FIRE ALARM SITE PLAN FA0.04 FOR LOCATION. COORDINATE WITH CIVIL DRAWINGS.

FIRE ALARM EQUIPMENT LIST

QTY.	MODEL NUMBER	MAKE	DESCRIPTION	CA STATE FIRE MARSHAL (CSFM) NUMBER	EXPIRATION DATE
1	5000-MXL	SIEMENS	MAIN FIRE ALARM CONTROL PANEL ANALOG/ADDRESSABLE, WITH THE FOLLOWING:	7165-0067:144	06-30-04
	MMB-2	SIEMENS	MAIN CONTROL BOARD	7165-0067:144	06-30-04
	MPS-12 AMP	SIEMENS	POWER SUPPLY, 12 AMP	7165-0067:144	06-30-04
	MKB-2	SIEMENS	COMMUNICATIONS MODULE	7300-0067:172	06-30-04
	NIM-1W	SIEMENS	INTERFACE MODULE	7165-0067:144	06-30-04
	MOM-4	SIEMENS	PERIPHERAL INTERFACE MODULE	7165-0067:144	06-30-04
	NAC-1	SIEMENS	NOTIFICATION CIRCUIT	7165-0067:144	06-30-04
	BTX	SIEMENS	~~18~~ 36 AMP HOUR BATTERIES	7165-0067:144	06-30-04
	MSE-MME-3	SIEMENS	ENCLOSURE FOR ALL ABOVE, AS REQUIRED	7165-0067:144	06-30-04
	5128	SIEMENS	SILENT KNIGHT DIALER	7300-0559:120	06-30-04
3	TRI-M	SIEMENS	INTERFACE MODULE, MONITORING	7300-0067:146	06-30-04
3	MSI-20B	SIEMENS	ADDRESSABLE MANUAL PULL STATION	7150-0067:036	06-30-04
4	FP11	SIEMENS	ADDRESSABLE PHOTO-ELECTRIC SMOKE DETECTOR	7272-0067:203	06-30-04
4	DB11	SIEMENS	SMOKE DETECTOR BASE	7300-0067:134	06-30-04
1	RCC-1	SIEMENS	REMOTE ANNUNCIATOR	7300-0067:152	06-30-04
4	FPT11	SIEMENS	ADDRESSABLE HEAT DETECTOR	7272-0067:202	06-30-04
4	DB11	SIEMENS	HEAT DETECTOR BASE	7300-0067:134	06-30-04
2	NS-24MCW-FW	WHEELOCK	HORN/STROBE (15 OR 75 CD RATING)	7125-0785:142	06-30-04
3	RSS-24MCW-FW	WHEELOCK	STROBE (15 OR 75 CD RATING)	7125-0785:141	06-30-04
1	AH-24WP	WHEELOCK	WEATHERPROOF HORN STROBE WITH WIRE GUARD	7123-0785:131	06-30-04

FIRE ALARM FATP-CP BATTERY CALCULATIONS

BASED ON Siemens MXL PANEL

Siemens #	QTY	Standby Current	Alarm Current	Standby Total	% In Alarm	Alarm Total	Project: Contra Costa Community College,San Ramon,CA
MMB-2 Main Board	1	0.1750	0.1750	0.175	100%	0.175	
ALD-1 Loop 1 (1.1mA per device)	120	0.0011	0.0011	0.132	100%	0.132	
		0.0011	0.0011	0.000	100%	0.000	
MKB-2 Control Keypad Annunciator	1	0.0050	0.0050	0.005	100%	0.005	
RCC-1F Remote command center	1	0.0800	0.0800	0.080	100%	0.080	
NET-7 Network interface module	1	0.0300	0.1200	0.030	100%	0.120	
NAC circuit #1	1	0.0120	0.7180	0.012	100%	0.718	
NET-7M Peripheral interface module	1	0.0000	0.0000	0.000	100%	0.000	
				0.000	100%	0.000	
				0.000	100%	0.000	
				0.000	100%	0.000	
				0.000	100%	0.000	
				0.000	100%	0.000	
		TOTAL	STANDBY	0.434			
		TOTAL	ALARM			1.230	

HOURS OF STAND-BY	24	0.434		10.4160	TOTAL STANDBY
MINUTES IN ALARM (5)	5	1.23	0.0833	0.1025	ALARM A.H.
				10.5185	SUB-TOTAL
Note: ALD-1 calculated at max. devices per loop				X 1.25	
				13.1481	TOTAL A.H. NEEDED

Provide ~~18~~ 36 amp hour batteries AS REQUIRED BY DSA

VOLTAGE DROP CALCULATION - NOTIFICATION CIRCUIT CKT. # CP1

BASED ON POINT TO POINT OHMS CALCULATION - ACCEPTABLE LIMIT 10% @ 24 VOLTS = 2.4 VOLTS MAX.
LINE TO LINE VOLTAGE= 24

FROM START POINT OF RUN	TO END POINT OF RUN	CKT. NO.	RUN LENGTH FEET	DEVICE AMP LOAD	ACCUM. AMP LOAD OF CKT.	AMP. FEET	VOLTS DROP THIS SEGMENT	VOLTAGE AT END OF RUN	ACCUM. VOLT DROP	WIRE SIZE
MAP-1	DSM1	1	2	0.038	0.706	1.41	0.005	24.00	0.005	12
DSM1	1-1	1	12	0.134	0.668	8.02	0.027	23.97	0.032	12
1-1	2-1	1	60	0.116	0.534	32.04	0.109	23.86	0.141	12
2-1	3-1	1	18	0.041	0.418	7.52	0.026	23.83	0.167	12
3-1	4-1	1	24	0.116	0.377	9.05	0.031	23.80	0.197	12
4-1	5-1	1	84	0.145	0.261	21.92	0.075	23.73	0.272	12
5-1	6-1	1	26	0.116	0.116	3.02	0.010	23.72	0.282	12

MAX. VOLTAGE DROP ON CIRCUIT = MAX ACCUM. VOLT DROP/24 X 100= 1.18%

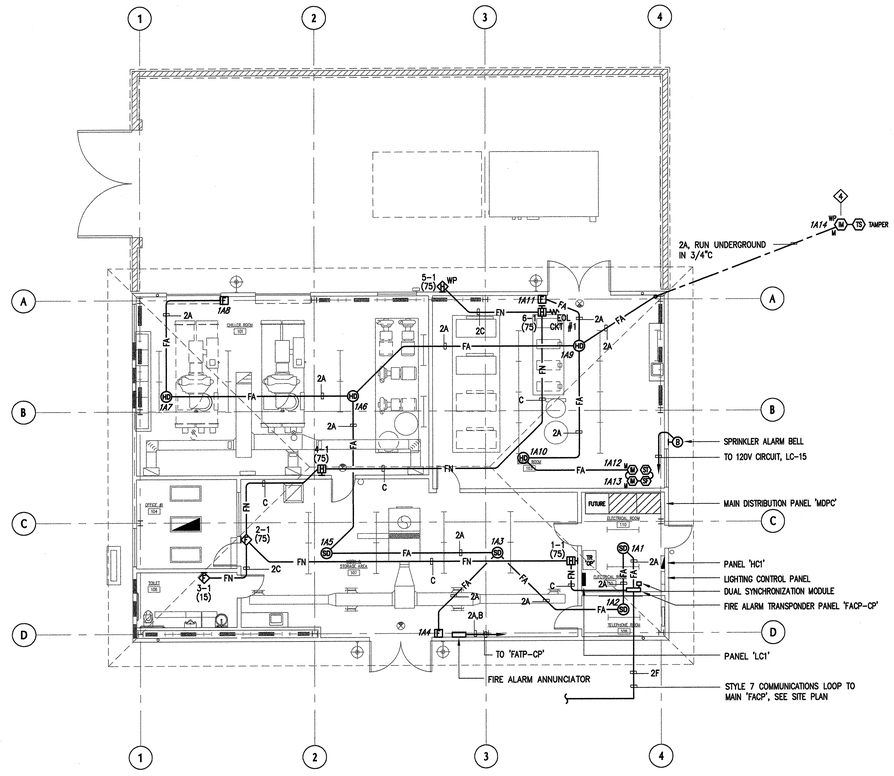

CENTRAL PLANT PLAN - FIRE ALARM

SCALE: 1/8" = 1'-0"

1

KEY PLAN

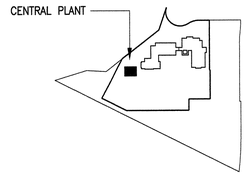

tBP architecture planning interiors management
tBP/architecture
1000 Burnett Ave, Suite 140
Concord, CA 94520
ph: 925.246.6419 fx: 925.246.6495
architect

CONSULTING ENGINEERS
350 Second Street, Suite 100
Los Altos, CA 94022
TEL (415) 247-8700
FAX (415) 247-8711
twfsf@pacbell.net
TOFFT WOLFF FARROW Inc.
TWF #03007.00
consultant

IDENTIFICATION STAMP
DIVISION OF THE STATE ARCHITECT
APPL.ID: 1 0 5 7 1 9
AC. 25 FS. 0
DATE 3/26/04
agency

SAN RAMON VALLEY CENTER
CONTRA COSTA COMMUNITY COLLEGE DISTRICT
SAN RAMON, CALIFORNIA
owner

tBP project number : 20212.00
file name: .
drawn by: ABC checked by:
date: 03-09-04 plot scale: 1:1

Rev:	date:	description:
1	03-09-04	DSA BACKCHECK

drawing title: CENTRAL PLANT PLAN FIRE ALARM, DETAILS, RISER
building no: .
drawing no: FACP.41
drawing . of

IF ARCHITECT DETERMINED TO BE ABSOLUTELY NECESSARY TO DELAY PRINT, FOR DSA

190

GENERAL NOTES

1. ALL WALL BENCHTOPS SHALL BE 30" DEEP INCLUDING BACK SPLASH (UNLESS OTHERWISE NOTED).
2. ALL ISLAND AND PENINSULA BENCHTOPS SHALL BE 60" DEEP (UNLESS OTHERWISE NOTED).
3. ALL BENCHES AND TABLES SHALL BE 36" HIGH (UNLESS OTHERWISE NOTED).
4. ALL BENCH/TABLE TOPS TO BE 1" THICK EPOXY RESIN (UNLESS OTHERWISE NOTED).
5. ALL BACK AND SIDE SPLASHES AND PIPE DROP CURBS TO BE 3/4" THICK AND 4" HIGH.
6. PROVIDE SIDE SPLASH AT ALL BENCH TOPS AGAINST FUME HOODS AND/OR ADJACENT WALLS.
7. OVERALL LENGTH OF BENCHTOPS SHALL BE DETERMINED BY CASEWORK SIZES AND DIMENSIONS AS INDICATED ON PLANS. TOPS SHALL OVERHANG 1/2" AT EACH END AND 1" FROM FRONT OF BASE CABINETS AND TABLES. WHEN OVERALL DEMENSIONS ARE GIVEN, 1/2" OVERHANG IS NOT INCLUDED.
8. ALL CASEWORK, FUME HOODS AND ANY OTHER FURNISHINGS WITH EXPOSED-TO-VIEW BACKS AND SIDES SHALL BE FINISHED.
9. INSTALL CLOSURE PANELS BETWEEN BACK OF CABINETS OR HOODS AND WALLS AT EXPOSED ENDS AND BETWEEN BASE CABINETS AND/OR HOODS THAT ARE SET BACK TO BACK.
10. ALL PENETRATIONS THROUGH BENCHTOP SHALL BE SEALED WITH SEALANT.
11. BACKS OF COUNTERTOPS AND SPLASHES AGAINST WALLS SHALL BE SEALED TO THE WALL WITH SEALANT.
12. CONTRACTOR SHALL FIELD VERIFY ALL DIMENSIONS PRIOR TO FABRICATION.
13. OWNER'S REPRESENTATIVE WILL SELECT COLORS FOR ALL COMPONENTS OF PROJECT INDICATED ON THESE DRAWINGS. COLOR SELECTION WILL BE FROM THE CASEWORK MANUFACTURER'S STANDARD COLOR LINE.
14. FREE STANDING SHELVING AND CASEWORK LESS THAN 18" DEEP SHALL BE SECURED TO PREVENT TIPPING. SUBMIT SHOP DRAWINGS OF ATTACHMENT PRIOR TO INSTALLATION.
15. SAFETY SHOWER/EYEWASH UNITS SHALL COMPLY WITH ANSI STANDARDS FOR ACCESSIBILITY BY THE PHYSICALLY DISABLED. SAFETY SHOWER/EYEWASH UNITS SHALL BE FURNISHED UNDER DIVISION 11 FOR INSTALLATION UNDER DIVISION 15.
16. FOR LABORATORY SERVICE FITTING TYPES, LOCATIONS AND ORDER, REFER TO LABORATORY FURNISHINGS PLANS. THESE FITTINGS SHALL BE PROVIDED UNDER DIVISION 11 FOR INSTALLATION UNDER DIVISION 15.
17. WHERE NO FUME HOOD OCCURS ADJACENT TO CORROSIVE STORAGE CABINETS, ROUTE VENT PIPE (IN PIPE CHASE) UP NEAREST PIPE DROP ENCLOSURE TO EXHAUST DUCT SYSTEM FOR CONNECTION BY DIVISION 15.
18. WHERE FUME HOOD OCCURS ADJACENT TO VACUUM PUMP OR CORROSIVE STORAGE CABINETS, ROUTE VENT PIPE (IN PIPE CHASE) TO FUME HOOD AND EXTEND 2" ABOVE FUME HOOD WORK SURFACE BEHIND BAFFLE.
19. LOCATION OF EQUIPMENT, SUCH AS FUME HOODS, OVERHEAD SERVICE CARRIERS, BRACES OR ANY OTHER ITEMS THAT MAY INTERFERE WITH LIGHTING, STRUCTURAL OR MECHANICAL SYSTEMS, SHALL BE CAREFULLY COORDINATED. NOTIFY OWNER'S REPRESENTATIVE OF DISCREPANCIES PRIOR TO PROCEEDING WITH WORK.
20. UNLESS OTHERWISE NOTED, ALL MISCELLANEOUS CHANNELS, BRACKETS AND FITTINGS INDICATED ON ALL LABORATORY FURNISHINGS DRAWINGS SHALL BE SUPPLIED, INSTALLED AND PAINTED UNDER DIVISION 11.
21. CONTRACTOR SHALL EXAMINE ALL LABORATORY FURNISHINGS PLANS AND COORDINATE WITH REFLECTED CEILING PLANS FOR PROPER CEILING HEIGHTS & PIPE DROP ENCLOSURE HEIGHTS AND LOCATIONS.
22. OVERHEAD SERVICE CARRIERS, SLOTTED-CHANNEL FRAMING AND OTHER STRUCTURALLY ANCHORED AND SUSPENDED DEVICES WHICH REQUIRE COORDINATION WITH OTHER TRADES SHALL BE THE RESPONSIBILITY OF THIS DIVISION (UNLESS OTHERWISE NOTED). ADDITIONAL FRAMING MAY BE REQUIRED TO ACCOMMODATE ANCHORAGE AROUND DUCTWORK OR OTHER OBSTRUCTIONS.
23. ALL BULLETIN BOARDS, MARKER BOARDS, CHALKBOARDS, PROJECTION SCREENS, COAT RACKS AND FIRE EXTINGUISHERS ARE INDICATED ON THE "LF" DRAWINGS FOR COORDINATION PURPOSES ONLY. REFER TO ARCHITECTUAL DRAWINGS.
24. ALL WALL MOUNTED ELECTRICAL RACEWAYS SHALL BE MOUNTED 43" A.F.F. TO THE UNDERSIDE OF THE RACEWAY U.O.N.

LABORATORY BENCHTOP MATERIAL SCHEDULE

[E] EPOXY RESIN BENCHTOP

+30", +34", +36" INDICATES BENCHTOP HEIGHT ABOVE FINISH FLOOR

DETAIL SYMBOLS LEGEND

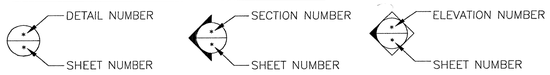

TYPICAL ABBREVIATIONS

ADA	AMERICAN DISABILITIES ACT
A.F.F.	ABOVE FINISHED FLOOR
CFM	CUBIC FEET/MINUTE
DIA	DIAMETER
DIV.	DIVISION
EQUIP	EQUIPMENT
FZR.	FREEZER
GA.	GAUGE
H.D.	HEAVY DUTY
MAX.	MAXIMUM
MIN.	MINIMUM
MTD.	MOUNTED
N.T.S.	NOT TO SCALE
O.C.	ON CENTER
OFOI	OWNER FURNISHED, OWNER INSTALLED
OFCI	OWNER FURNISHED, CONTRACTOR INSTALLED
O.H.	OVERHEAD
OHSC	OVERHEAD SERVICE CARRIER
REF.	REFRIGERATOR
ST.STL.	STAINLESS STEEL
TEMP	TEMPERATURE
TYP.	TYPICAL
U/C	UNDER COUNTER
U.O.N.	UNLESS OTHERWISE NOTED
WP	WEATHERPROOF

LABORATORY SERVICE ABBREVIATIONS

CW	POTABLE COLD WATER
DH	DRENCH HOSE
EW	EYEWASH
FD	FLOOR DRAIN
FS	FLOOR SINK
HW	POTABLE HOT WATER
LG	LABORATORY GAS
LV	LABORATORY VACUUM
SCW	SOFT COLD WATER
SS	SAFETY SHOWER

LABORATORY SYMBOLS LEGEND

	SYMBOL LEGEND	DESCRIPTION	DETAIL
1		PIPE DROP ENCLOSURE	1–3 / LF3.3
2		DRYING RACK	1 / LF3.4
3		ADJUSTABLE WALL SHELVES (2 TIER U.O.N.)	9 / LF3.2
4		STAINLESS STEEL WIRE SHELVING (2 TIER U.O.N.)	7 / LF3.2
5		ADJUSTABLE ISLAND BENCH SHELVING (2 TIER U.O.N.)	8 / LF3.2
6		CYLINDER RESTRAINT	4 / LF3.4
7		DOWN DRAFT HOOD BONNET	5 / LF3.1
8		SAFETY STATION WITH EYEWASH UNIT (SURFACE MOUNTED)	12 / LF3.5
9		OVERHEAD SERVICE CARRIER	7–9 / LF3.3
10		SAFETY STATION WITH EYEWASH UNIT	11 / LF3.5
11		MOVABLE TABLE	2 / LF3.4
12		MARINE EDGE	
13		NOT USED	
14		BALANCE TABLE	
15		DOWN DRAFT HOOD EXHAUST	4 / LF3.1
16		WATER PURIFIER - OWNER FURNISHED, OWNER INSTALLED	
17		LOW SLOT EXHAUST	3 / LF3.1
18		PROJECTION SCREEN (FOR COORDINATION ONLY)	
19		MULTI-MEDIA PROJECTOR (CEILING MOUNT)	
20		CANOPY HOOD	
21		MARKER BOARD (FOR COORDINATION ONLY)	
22		TACK BOARD (FOR COORDINATION ONLY)	
	WCxx	WALL CABINET - REFER TO CASEWORK MENU	
	TAxx	TALL STORAGE CABINET - REFER TO CASEWORK MENU	
		LEG POST UNDER BENCH/TABLE TOP	
	CFH	CHEMICAL FUME HOOD - REFER TO EXHAUST SCHEDULE	2 / LF3.1
		OWNER FURNISHED, OWNER INSTALLED EQUIPMENT	
		EPOXY RESIN SINK - SEE SINK SCHEDULE	9 / LF3.1
		CUP SINK - SEE SINK SCHEDULE	
	FD	FLOOR DRAIN (SHOWN FOR COORDINATION ONLY)	

DOOR CLEARANCES

INTERIOR / INTERIOR CONDITION

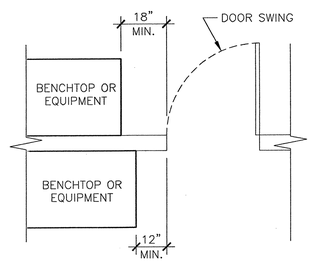

EXTERIOR / INTERIOR CONDITION

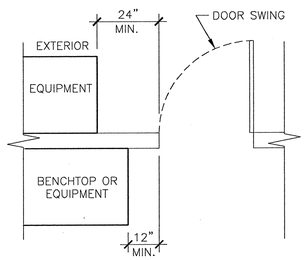

LABORATORY SERVICE FITTING SCHEDULE

ABBREV.	NOTES	MOUNTING	DETAIL
CW	COLD WATER FITTING	DECK	1 / LF3.5
		DECK (ADA)	2 / LF3.5
		HOOD	10 / LF3.5
		PANEL	4 / LF3.5
HWCW	HOT WATER/COLD WATER MIXING VALVE	DECK	5 / LF3.5
		DECK (SPRAY)	3 / LF3.5
DH	DRENCH HOSE/EYE WASH	DECK	6 / LF3.5
LG,LG(2), LG(2A),LV, LVLG, LVLG(2), LG(4)	LABORATORY GAS & LABORATORY VACUUM FITTINGS	DECK	7 / LF3.5 and 9 / LF3.5
		HOOD	10 / LF3.5
		OVERHEAD	8 / LF3.5

FUME HOOD EXHAUST SCHEDULE

RFD HOOD TYPE	HOOD DESCRIPTION	FACE VELOCITY FEET PER MINUTE	18" SASH OPENING: AIR FLOW (CFM)	18" SASH OPENING: STATIC PRESSURE	COLLAR SIZE	CONSTRUCTION REMARKS	DETAIL
4'ACFH	4' ADA CHEMICAL FUME HOOD	100	500	0.10	12" DIA	WORK SURFACE @ 34"	1 / LF3.1
6'CFH	6' CHEMICAL FUME HOOD	100	800	0.15	12" DIA	--	2 / LF3.1
6'ACFH	6' ADA CHEMICAL FUME HOOD	100	800	0.15	12" DIA	WORK SURFACE @ 34"	1 / LF3.1

EQUIPMENT AND LOCAL EXHAUST SCHEDULE

SYMBOL	DESCRIPTION	AIR FLOW (CFM)	STATIC PRESSURE	CONNECT. SIZE	REMARKS
CS--	VENTED CORROSIVE STORAGE CABINET	20	--	2" DIA	--
	LOW-SLOT EXHAUST	SEE NOTES	--	--	125 PER LF (3" HORIZ OPENING ABOVE 3/4" BACKSPLASH
	DOWN DRAFT ISLAND BENCH	400	--	6" DIA	FOR TWO DOWNDRAFTS IN PAIR USING ONE EXHAUST CONNECTION
	DOWN DRAFT WALL BENCH	200	--	6" DIA	--
	CANOPY HOOD	--	--	--	50 CFM PER LF OF OPEN PERIMETER
	4" EXHAUST VENT	100	.5	4"DIA	CAPPED FOR FUTURE INSTRUMENTATION BY DIVISION 15

NOTES:
1. STATIC PRESSURE IS SHOWN IN INCHES OF WATER.
2. AIR FLOW RATES, STATIC, PRESSURE, AND COLLAR SIZES FOR CFH ARE BASED ON "KEWAUNEE" PRODUCTS. VALUES FROM OTHER MANUFACTURERS MAY VARY.

LABORATORY SINK SCHEDULE

SINK NUMBER	MATERIAL	SIZE	REMARKS
		WIDTH x FRONT TO BACK x DEPTH	
SK1	EPOXY RESIN	21" X 17" X 10"	
SK2	EPOXY RESIN	18" X 15" X 5"	REQUIRES ADA FITTINGS
SK3	EPOXY RESIN	28" X 15" X 12"	
SK4	EPOXY RESIN	12" X 16" X 8-1/4"	CHEMISTRY
CS1	EPOXY RESIN	6" X 14"	FUME HOODS
CS2	EPOXY RESIN	12" X 12"	FUME HOOD (CHEMISTRY)

REFER TO DETAIL 7 / LF3.1 AND 8 / LF3.1 FOR FIXTURE SPACING. REFER TO DETAIL 9 / LF3.1 FOR DROP-IN SINK DETAILS.

tBP
architecture
planning
interiors
management

tBP/Architecture
1000 Burnett Ave, Suite 140
Concord, CA 94520
ph. 925.246.6419 fx. 925.246.6495

architect

RFD
RESEARCH FACILITIES DESIGN
3565 Fifth Avenue, Suite 202
San Diego, California 92103
TEL 619 . 297 . 0556
FAX 619 . 284 . 4901

consultant

IDENTIFICATION STAMP
BAY AREA AIR QUALITY MANAGEMENT DISTRICT
APPL NO. 13579
DATE 5-13-14

agency

SAN RAMON VALLEY CENTER
CONTRA COSTA COMMUNITY COLLEGE DISTRICT
SAN RAMON, CALIFORNIA

owner

tBP project number : 2012.00
file name:
drawn by: JRS checked by:
date: 05-09-04 plot scale: 1:1

drawing title: LAB GENERAL NOTES, LEGENDS, & SCHEDULES
building no.:
drawing no.: LF-1.1
drawing of ?

CASEWORK LEGEND

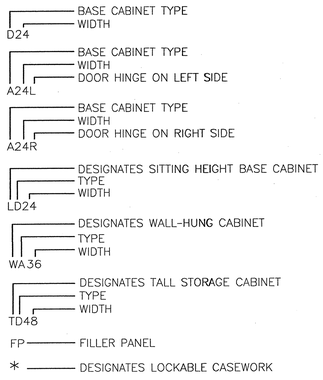

STANDING HEIGHT BASE CABINETS (WOOD)

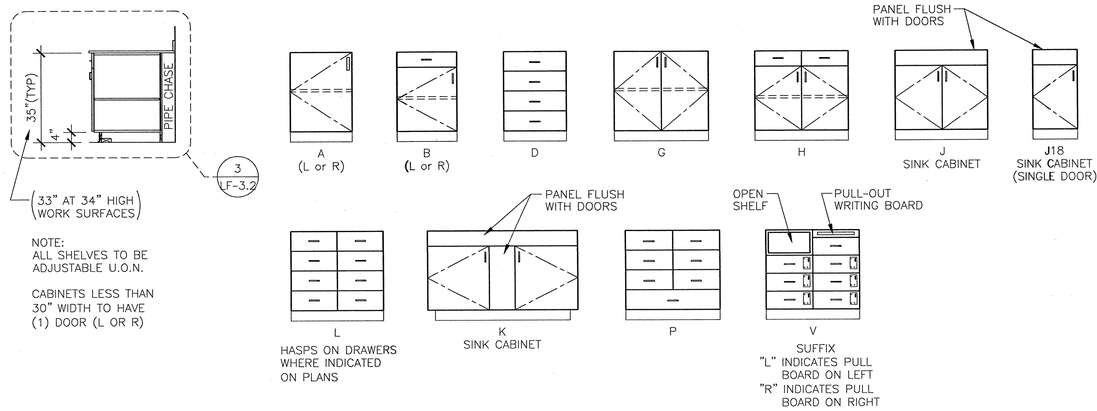

KNEE OPENINGS

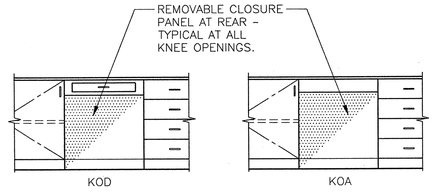

KOA
KNEE OPENING WITH APRON

KOD
KNEE OPENING **WITH** DRAWER
(DRAWER WIDTH TO BE
MINIMUM OF 24" WIDE)

KO
KNEE OPENING WITHOUT
APRON
(NOT SHOWN)

NOTE:
*AT LOCATIONS WHERE KNEE OPENING
WIDTHS ARE NOT GIVEN ON PLANS,
FIELD VERIFY WALL TO WALL DIMENSIONS.

*KNEE OPENINGS AT STATIONS DESIGNATED
FOR DISABLED ACCESS SHALL BE 30"WIDE,
27"HIGH,AND 30"DEEP MINIMUM.

WALL CABINETS (WOOD)

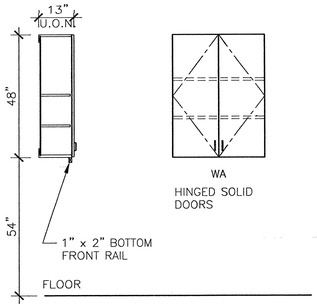

SITTING HEIGHT BASE CABINETS (WOOD)

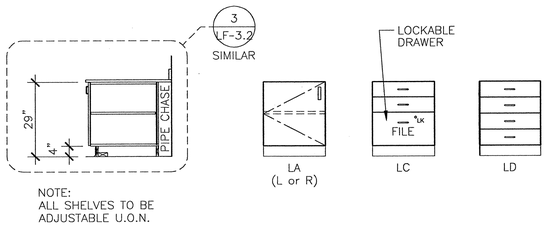

TALL STORAGE CABINETS (WOOD)

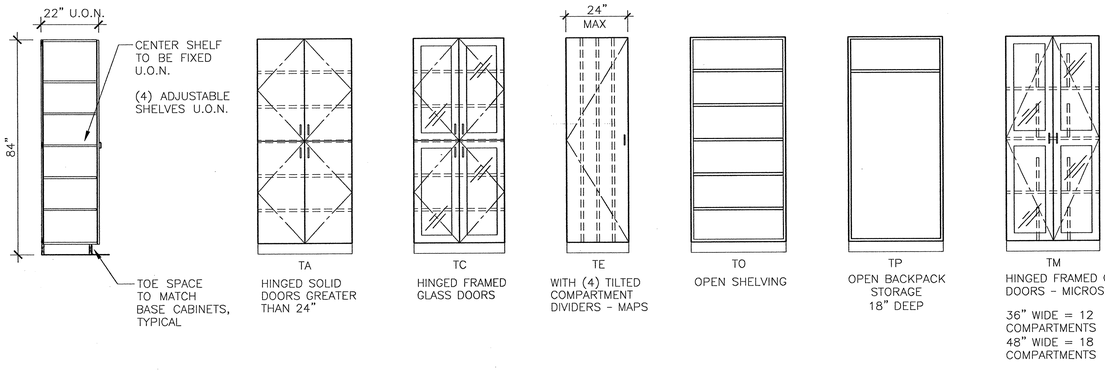

CABINET BACKING HEIGHTS

FOR REFERENCE ONLY
(REFER TO ARCHITECTURAL DRAWINGS
FOR ANCHORAGE REQUIREMENTS)

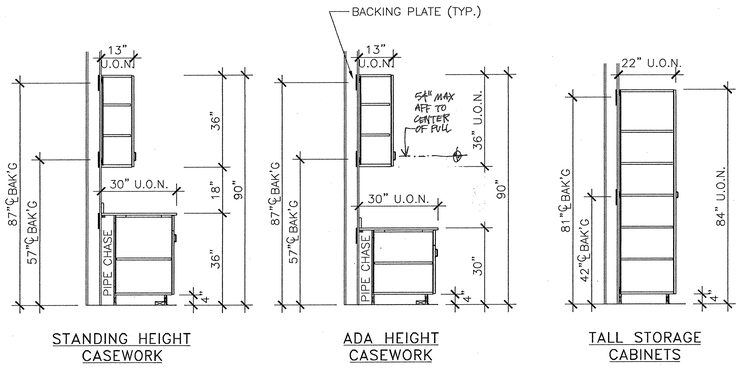

STANDING HEIGHT CASEWORK

ADA HEIGHT CASEWORK

TALL STORAGE CABINETS

SPECIAL BASE CABINETS (METAL)

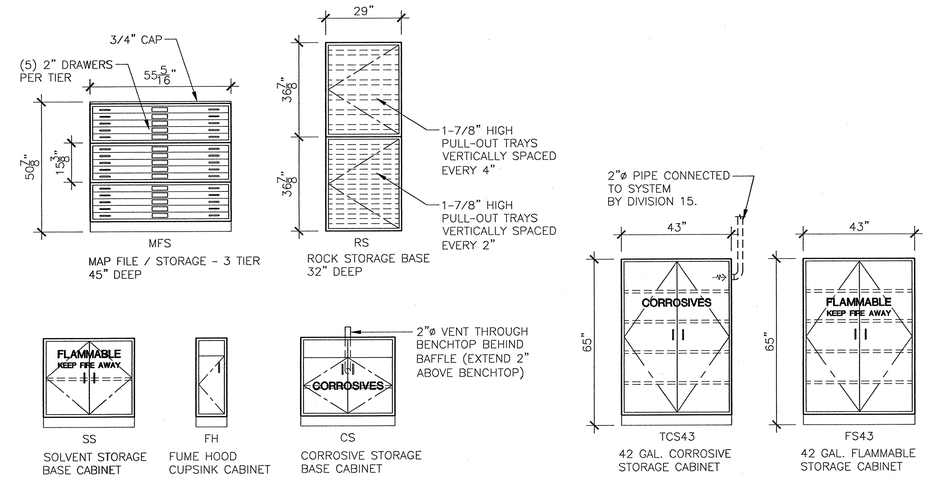

MOVABLE INSTRUCTOR'S BENCH

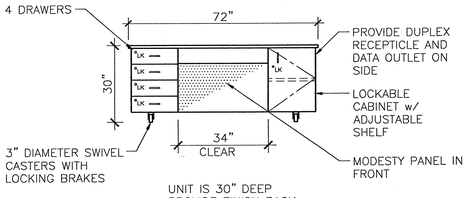

UNIT IS 30" DEEP
PROVIDE FINISH BACK.

NOTE:
*KNEE OPENINGS AT STATIONS DESIGNATED
FOR DISABLED ACCESS SHALL BE 30"WIDE,
27"HIGH,AND 30"DEEP MINIMUM.

tBP
architecture
planning
interiors
management

LICENSED ARCHITECT RICHARD W. WINGATE, A.I.A. No. C-26805 REG. 12-31-2012 STATE OF CALIFORNIA

tBP/Architecture
1000 Burnett Ave. Suite 140
Concord, CA 94520
ph: 925.246.6419 fx: 925.246.6495

architect

LICENSED ARCHITECT RICHARD W. WINGATE, A.I.A. No. C-26805 REG. 12-31-2012 STATE OF CALIFORNIA

RFD
RESEARCH FACILITIES DESIGN
3946 Fifth Avenue, Suite 300
San Diego, California 92103
TEL 619 · 294 · 4500
FAX 619 · 294 · 4501

consultant

IDENTIFICATION STAMP
BRW OF THE STATE ARCHITECTS
DIVISION OF THE STATE ARCHITECT
APPL NO. 09CB719
DATE

agency

SAN RAMON VALLEY CENTER
CONTRA COSTA COMMUNITY COLLEGE DISTRICT
SAN RAMON, CALIFORNIA

owner

tBP project number : 2012.00
file name:
drawn by: RS checked by:
date: 05-09-04 plot scale: 1:1

drawing title: LAB CASEWORK MENU
building no:

drawing no: LF-1.2
drawing of ?

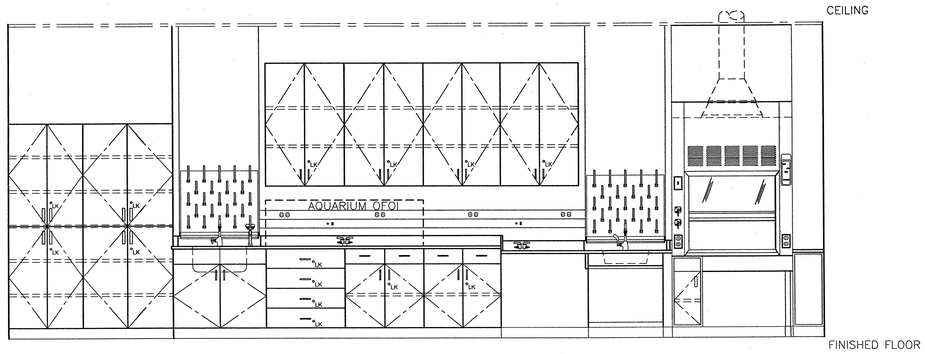

WALL BENCH – BIOLOGY LAB 240 1/2"=1'-0" (1)

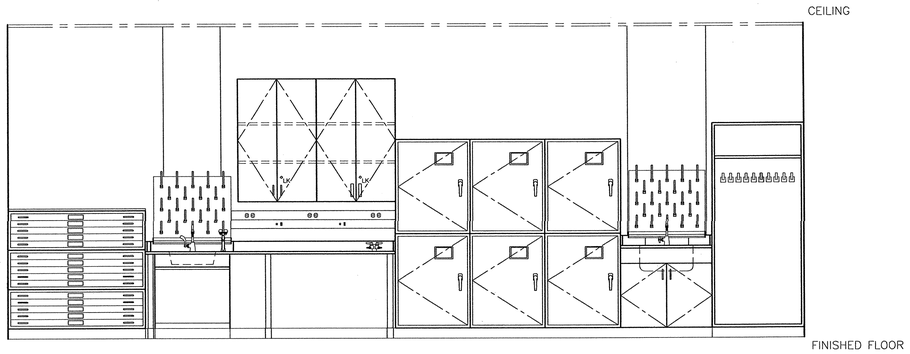

WALL BENCH – PHYSICS LAB 238 1/2"=1'-0" (2)

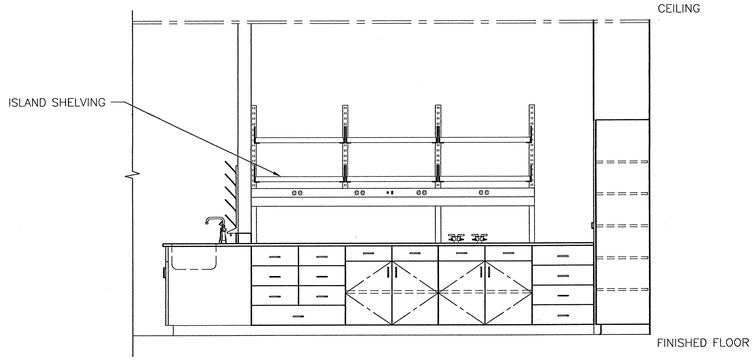

ISLAND BENCH – PREP/STORAGE 239 1/2"=1'-0" (3)

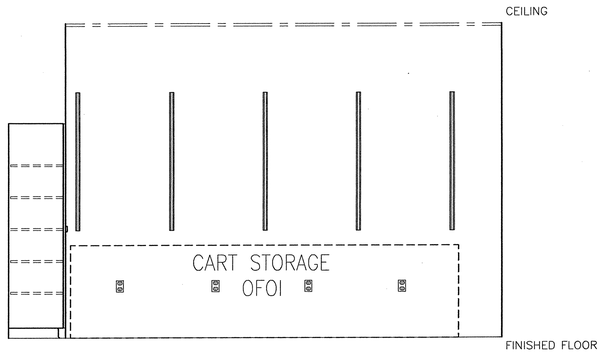

WALL UNISTRUT – PREP/STORAGE 239 1/2"=1'-0" (4)

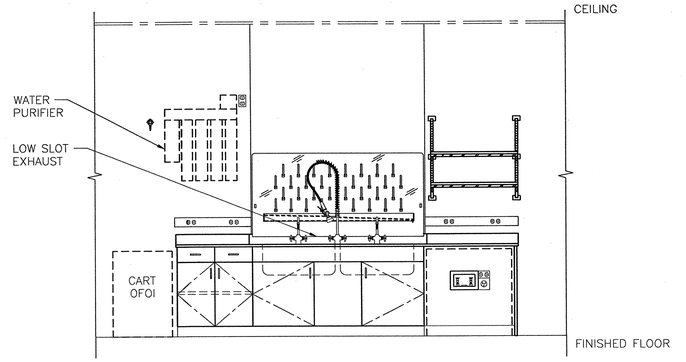

WALL BENCH – PREP/STORAGE 239 1/2"=1'-0" (5)

1/2"=1'-0" (6)

1/2"=1'-0" (7)

1/2"=1'-0" (8)

tBP
architecture
planning
interiors
management

LICENSED ARCHITECT
RICHARD A. MANGUM, AIA
NO. C-8655
REN. 12-31-05
STATE OF CALIFORNIA

tBP/Architecture
1000 Burnett Ave, Suite 140
Concord, CA 94520
ph: 925.246.6419 fx: 925.246.6495

architect

LICENSED ARCHITECT
RICHARD M. HEINZ
No. C-8655
REN. 03-31-05
STATE OF CALIFORNIA

RFD
RESEARCH FACILITIES DESIGN
3965 Fifth Avenue, Suite 300
San Diego, California 92103
TEL 619 . 297 . 0159
FAX 619 . 294 . 4901

consultant

DENTIFICATION STAMP
DIV. OF THE STATE ARCHITECT
OFFICE OF REGULATION SERVICES
APPL. NO. 105719
AC FLS SS
DATE

agency

SAN RAMON VALLEY CENTER

CONTRA COSTA COMMUNITY COLLEGE DISTRICT

SAN RAMON, CALIFORNIA

owner

tBP project number : 20212.00

file name:

drawn by: JRS checked by:

date: 03-09-04 plot scale: 1:1

drawing title: building no.:

LAB ELEVATIONS

drawing no.:

LF-1.3

drawing of ?

193

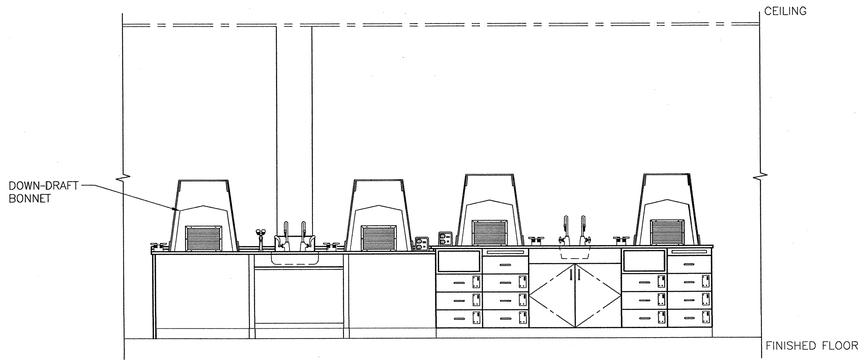

ADA STATION @ ISLAND BENCH – CHEMISTRY LAB 237 1/2"=1'-0" (1)

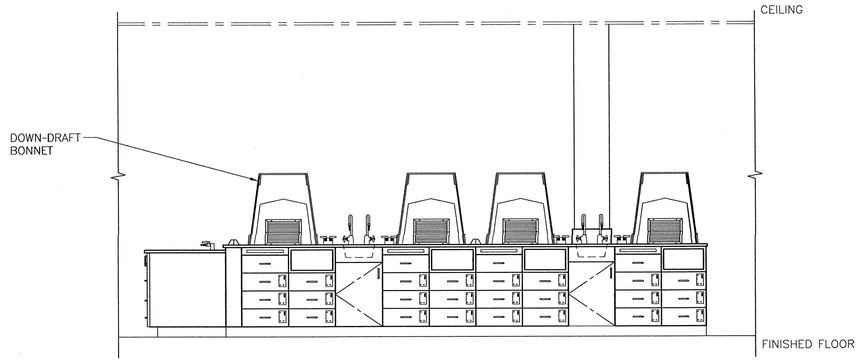

ISLAND BENCH – CHEMISTRY LAB 237 1/2"=1'-0" (2)

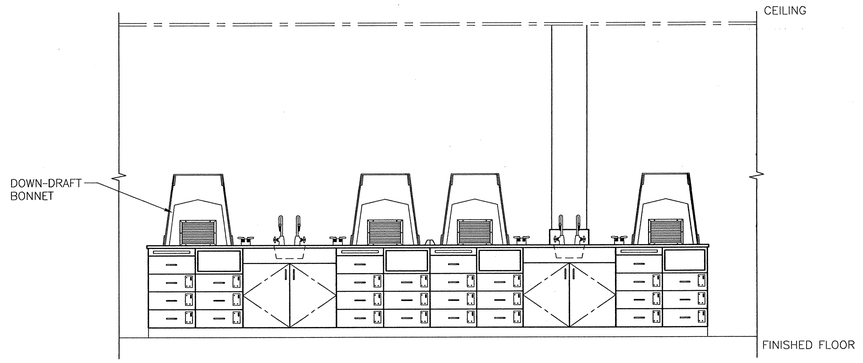

ISLAND BENCH – CHEMISTRY LAB 237 1/2"=1'-0" (3)

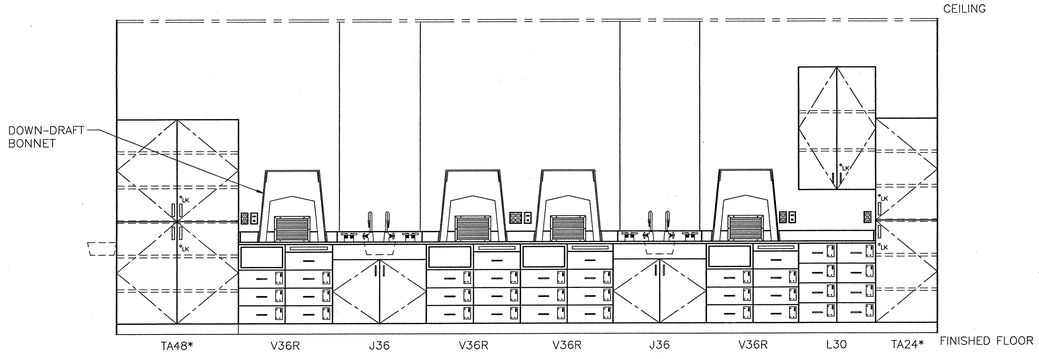

WALL BENCH – CHEMISTRY LAB 237 1/2"=1'-0" (4)

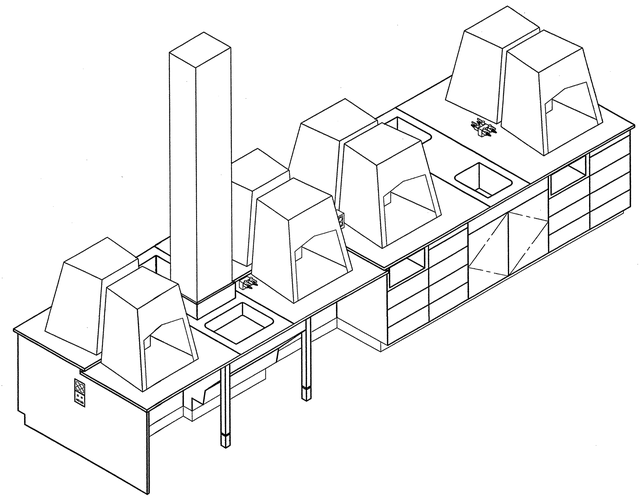

ADA STATION @ ISLAND BENCH – CHEMISTRY LAB 237 (ISOMETRIC) 1/2"=1'-0" (5)

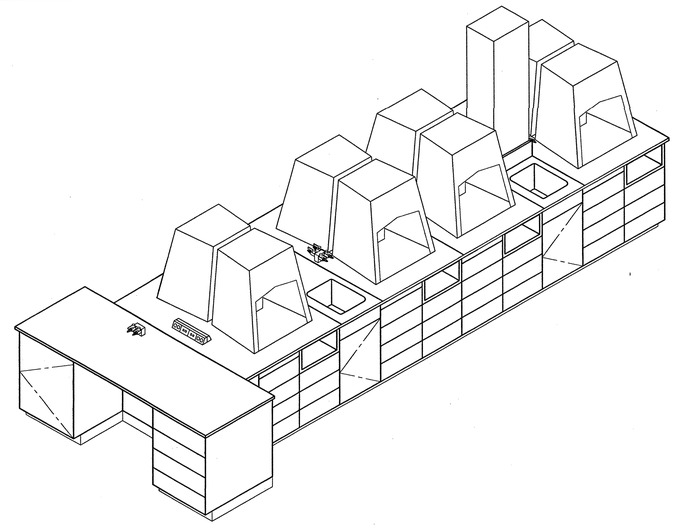

ISLAND BENCH – CHEMISTRY LAB 237 (ISOMETRIC) 1/2"=1'-0" (6)

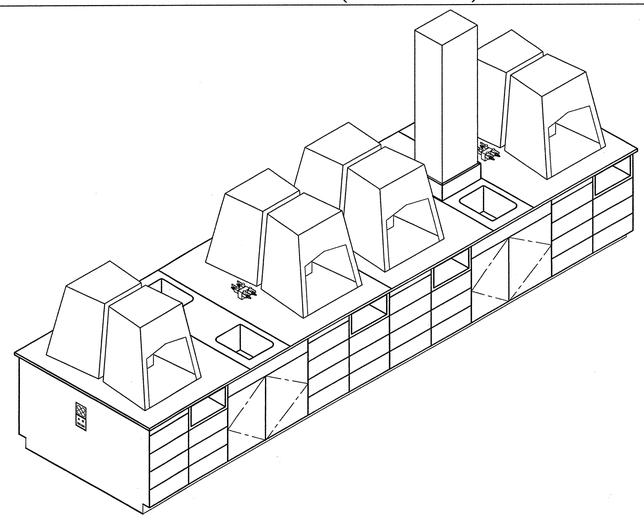

ISLAND BENCH – CHEMISTRY LAB 237 (ISOMETRIC) 1/2"=1'-0" (7)

tBP
architecture
planning
interiors
management
LICENSED ARCHITECT RICHARD W. MARTINI, A.I.A. RENEWAL 08/31/2021 RC-2685 STATE OF CALIFORNIA
tBP/Architecture
1000 Burnett Ave, Suite 140
Concord, CA 94520
ph: 925.246.6419 fx: 925.246.6495
architect
LICENSED ARCHITECT RICHARD W. MARTINI, A.I.A. RENEWAL 08/31/2021 RC-2685 STATE OF CALIFORNIA
RFD
RESEARCH FACILITIES DESIGN
3990 Fifth Avenue, Suite 300
San Diego, California 92103
TEL 619 · 294 · 0700
FAX 619 · 294 · 4001
consultant

IDENTIFICATION STAMP
DIVISION OF REGULATION SERVICES
APPL NO. 116734
DSA
DATE

agency

SAN RAMON VALLEY CENTER
CONTRA COSTA COMMUNITY COLLEGE DISTRICT
SAN RAMON, CALIFORNIA

owner

tBP project number : 2021.00
file name:
drawn by: JRS checked by:
date: 03-09-04 plot scale: 1:1

drawing title: LAB ELEVATIONS / ISOMETRICS
building no.:
drawing no.: LF-1.4
drawing of ?

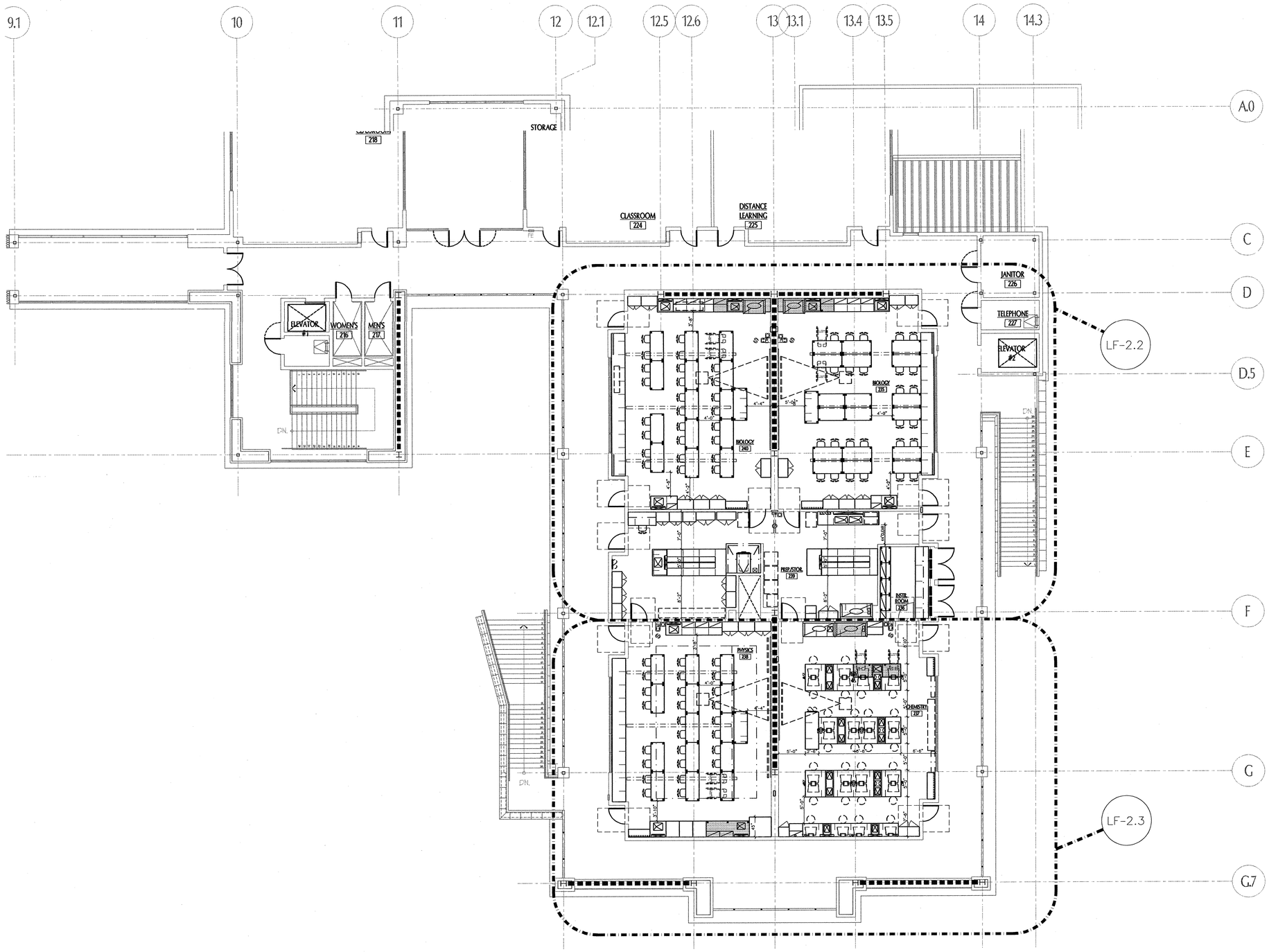

tBP architecture planning interiors management

tBP/Architecture
1000 Burnett Ave, Suite 140
Concord, CA 94520
ph: 925.246.6419 fx: 925.246.6495

architect

RFD
RESEARCH FACILITIES DESIGN
2305 Fifth Avenue, Suite 300
San Diego, California 92103
TEL 619 · 297 · 0159
FAX 619 · 294 · 4901

consultant

DEVELOPMENT STAMP
DIV. OF THE STATE ARCHITECT
OFFICE OF REGULATION SERVICES
APPL NO. 125719
AC
DATE

agency

SAN RAMON VALLEY CENTER

CONTRA COSTA COMMUNITY COLLEGE DISTRICT

SAN RAMON, CALIFORNIA

owner

tBP project number : 2021200

file name:

drawn by: JRS checked by:

date: 03-09-04 plot scale: 1:1

drawing title: building no.:

LAB PARTIAL
2ND FLOOR PLAN

drawing no.:

LF-2.1

drawing of ?

195

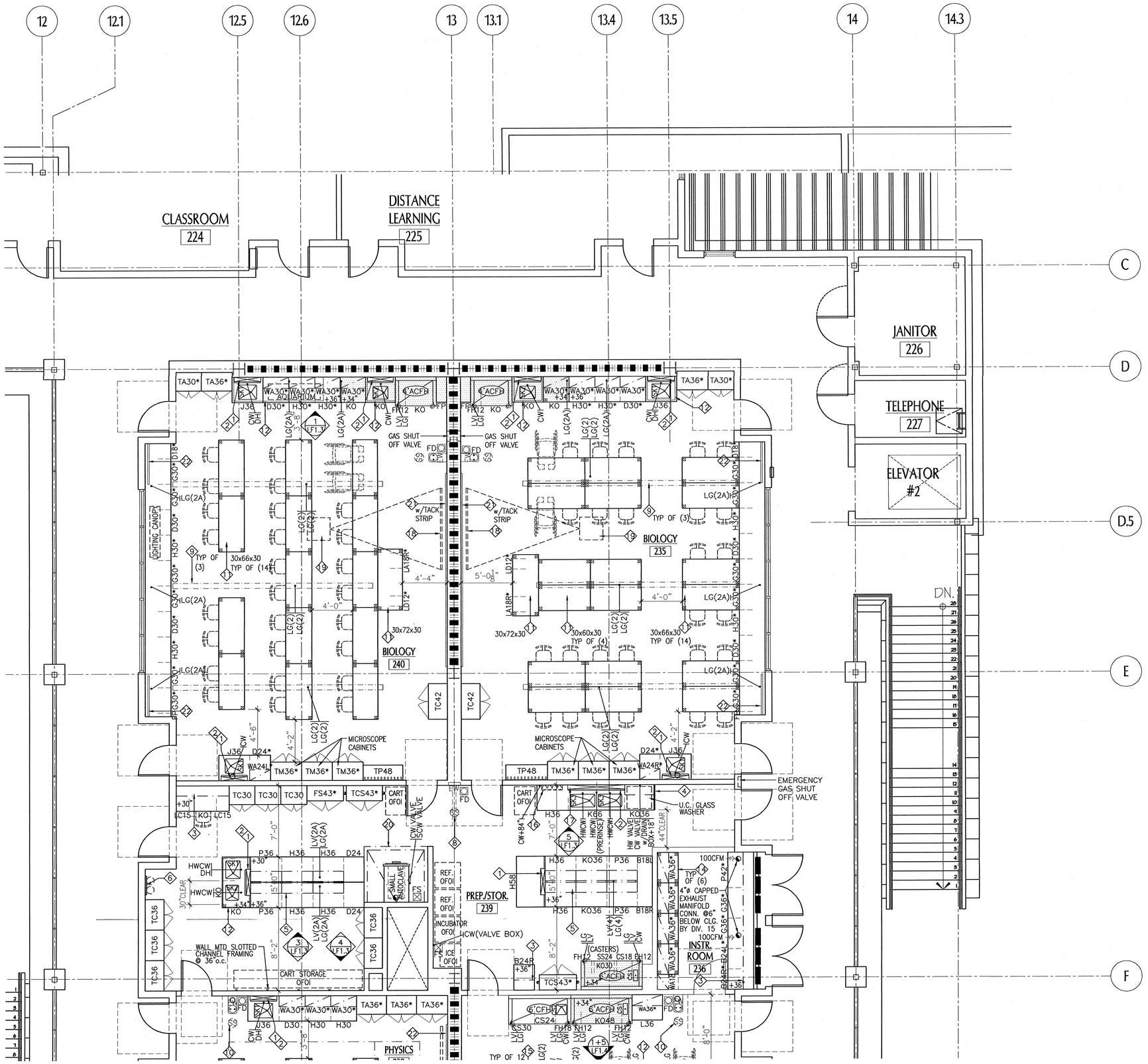
12
12.1
12.5
12.6
13
13.1
13.4
13.5
14
14.3
C
D
D.5
E
F
CLASSROOM
224
DISTANCE LEARNING
225
JANITOR
226
TELEPHONE
227
ELEVATOR #2
BIOLOGY
235
BIOLOGY
240
PREP./STOR.
239
INSTR. ROOM
236
PHYSICS
AQUARIUM
LIGHTING CANOPY
MICROSCOPE CABINETS
MICROSCOPE CABINETS
EMERGENCY GAS SHUT OFF VALVE
U.C. GLASS WASHER
GAS SHUT OFF VALVE
GAS SHUT OFF VALVE
CART STORAGE OFOI
WALL MTD SLOTTED CHANNEL FRAMING @ 36" o.c.
INCUBATOR OFOI
ICE OFOI
SMALL BENCH SINK
100CFM TYP OF (6) 4"ø CAPPED EXHAUST MANIFOLD CONN. @6" BELOW CLG BY DIV. 15
100CFM
DN.
TYP OF (3)
TYP OF (14)
TYP OF (4)
TYP OF (14)
TYP OF 12
w/TACK STRIP
w/TACK STRIP
(CASTERS)
HW VALVE CW VALVE w/DRAIN BOX+18" 44"CLEAR
CW VALVE HCW VALVE
HCW(VALVE BOX)
TA30* TA36*
WA30* WA30* WA30* WA30*
TA36* TA30*
TC30 TC30 TC30 FS43* TCS43*
TM36* TM36* TM36* TP48
TP48 TM36* TM36* TM36*
TC36 TC36 TC36 TC36 TC36 TC36
TC42 TC42
WA30* WA30* WA30*
TA36* TA36* TA36*
WA36* WA36* WA36* WA36* WA36* WA36* WA36* WA36*
WA36* WA36* WA36* WA36* WA36* WA36* WA36* WA36*
LG(2A) LG(2A) LG(2A) LG(2A) LG(2A) LG(2A) LG(2A) LG(2A)
LG(2) LG(2) LG(2) LG(2) LG(2) LG(2) LG(2) LG(2)
LG(4) LG(4)
LV(2A) LG(2A)
LV(4) LG(4)
LV LG
LV LG
LV LG

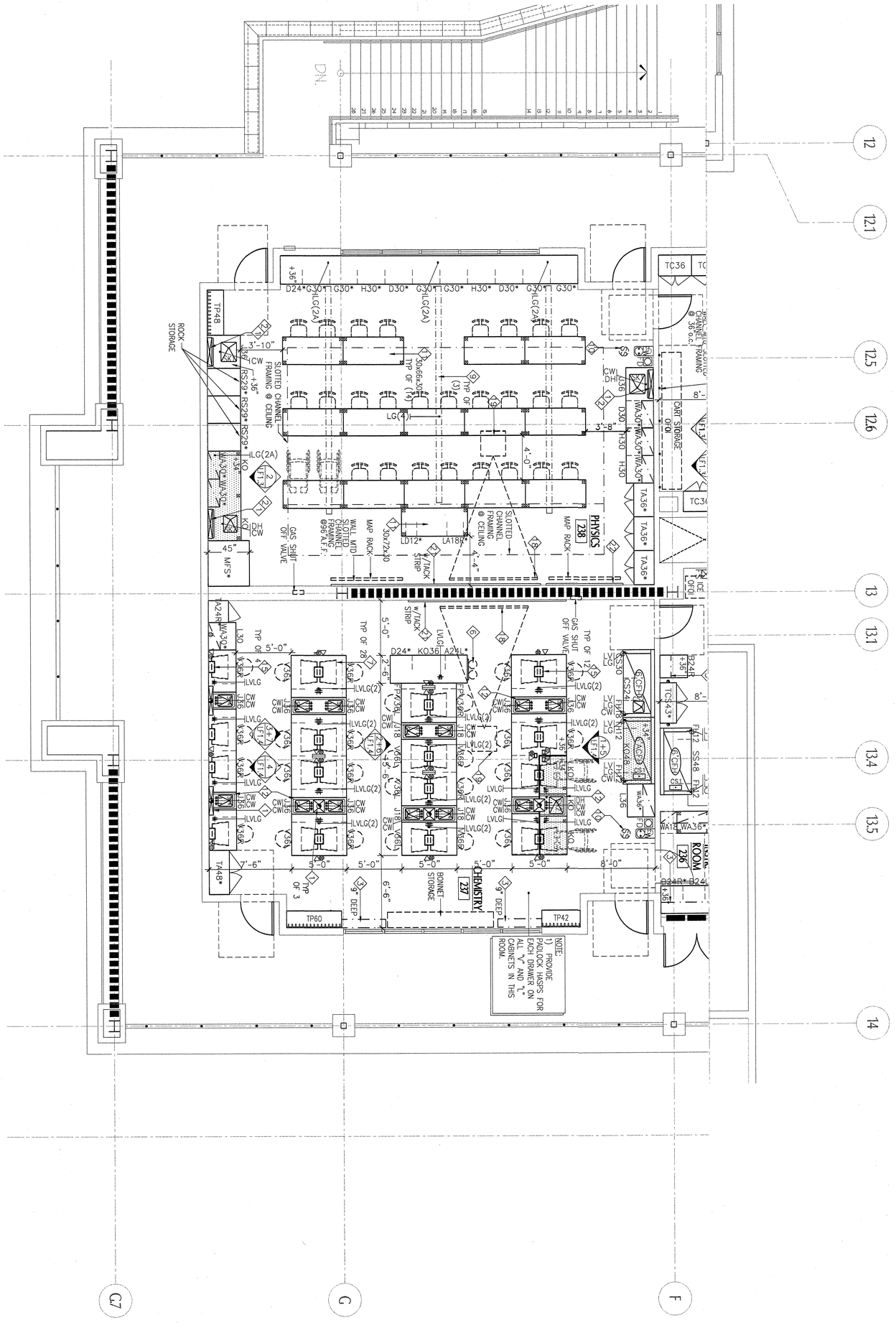

SAN RAMON VALLEY CENTER

CONTRA COSTA COMMUNITY COLLEGE DISTRICT

SAN RAMON, CALIFORNIA

owner

tBP project number: 2002/2.00

file name:

drawn by: JRS

checked by:

date: 05-09-04

plot scale: 1:1

drawing title: LAB PARTIAL 2ND FLOOR PLAN

building no:

drawing no: LF-2.3

drawing of ?

agency

IDENTIFICATION STAMP
DIV. OF THE STATE ARCHITECT
OFFICE OF REGULATION SERVICES
APPL NO. 105719
AC 05 FLS 100 SS 101
DATE 3/16/04

consultant

LICENSED ARCHITECT
RICHARD M. HENZ
No. C-12916
REN. 03-31-05
STATE OF CALIFORNIA

RFD
RESEARCH FACILITIES DESIGN
3985 Fifth Avenue, Suite 300
San Diego, California 92103
TEL 619 · 297 · 0159
FAX 619 · 294 · 4901

architect

LICENSED ARCHITECT
RICHARD A. MANGUM, AIA
NO. C-8685
REN. 12-31-05
STATE OF CALIFORNIA

LICENSED ARCHITECT
RICHARD A. MANGUM, AIA
NO. C-8685
REN. 12-31-05
STATE OF CALIFORNIA

tBP

tBP/Architecture
1000 Burnett Ave, Suite 140
Concord, CA 94520
ph: 925.246.6419 fx: 925.246.6495

architecture
planning
interiors
management

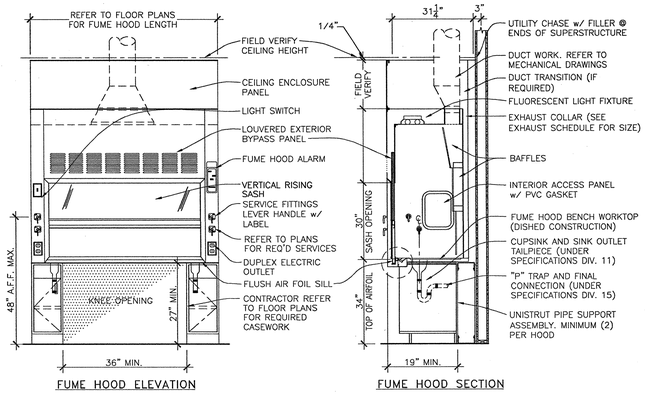

FUME HOOD ELEVATION

FUME HOOD SECTION

FLUSH SILL CHEMICAL FUME HOOD (ADA) 1/2"=1'-0" (1)

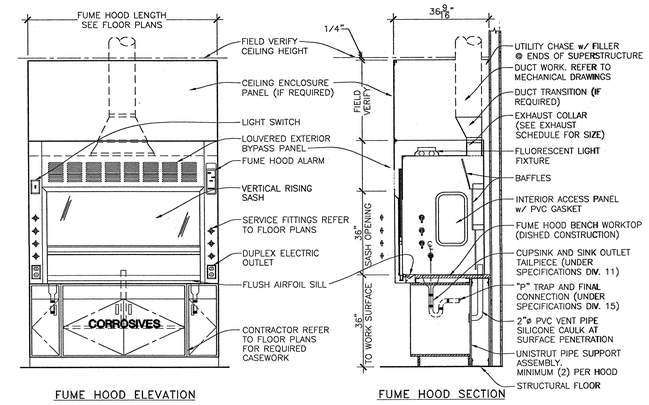

FUME HOOD ELEVATION

FUME HOOD SECTION

FLUSH SILL CHEMICAL FUME HOOD 1/2"=1'-0" (2)

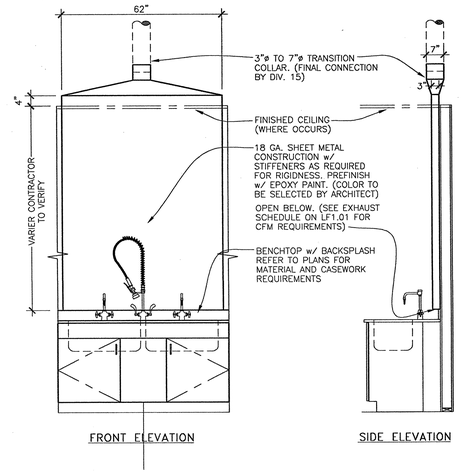

FRONT ELEVATION

SIDE ELEVATION

LOW SLOT EXHAUST 1/2"=1'-0" (3)

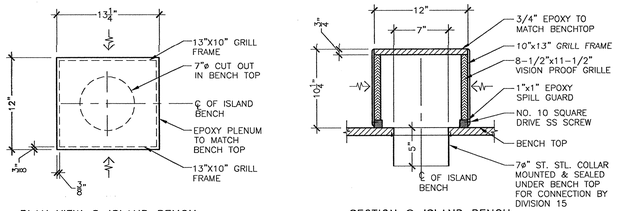

PLAN VIEW @ ISLAND BENCH

SECTION @ ISLAND BENCH

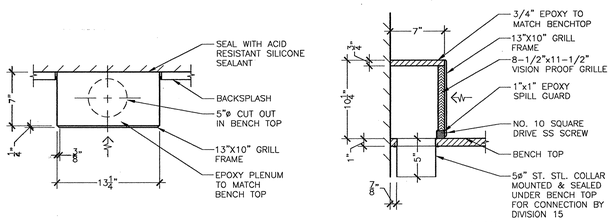

PLAN VIEW @ WALL BENCH

SECTION @ WALL BENCH

DOWNDRAFT HOOD EXHAUST DETAIL 1-1/2"=1'-0" (4)

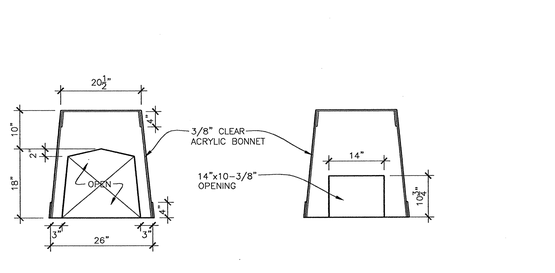

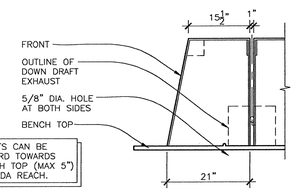

CLEAR ACRYLIC BONNET DETAIL 3/4"=1'-0" (5)

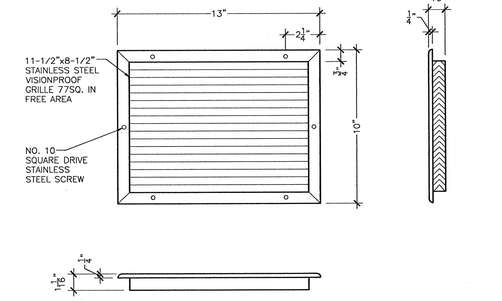

DOWN DRAFT EXHAUST GRILLE AT ISLAND OR WALL BENCH 3"=1'-0" (6)

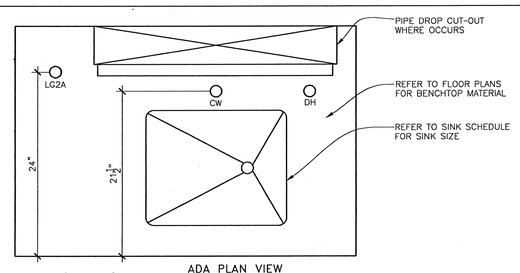

ADA PLAN VIEW

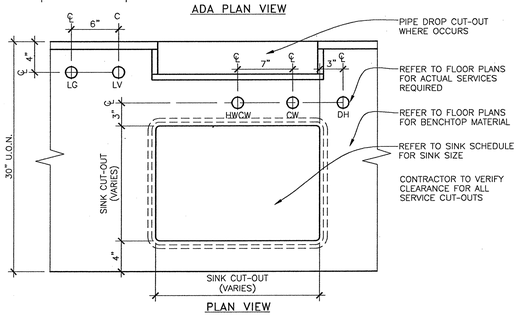

PLAN VIEW

TYPICAL FIXTURE SPACING @ SINK 1-1/2"=1'-0" (7)

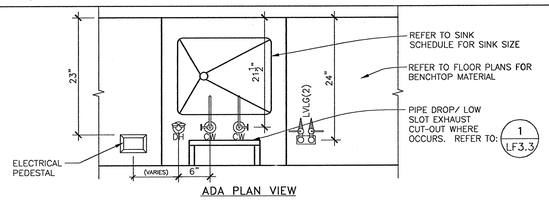

ADA PLAN VIEW

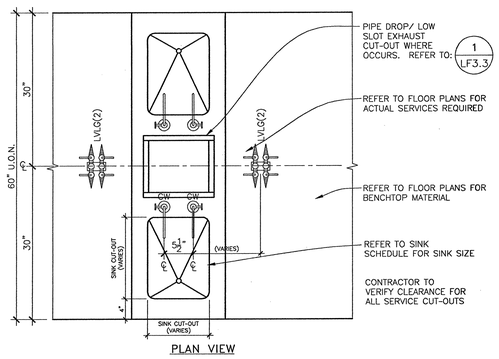

PLAN VIEW

FIXTURE SPACING @ ISLAND CUPSINK - CHEMISTRY 1"=1'-0" (8)

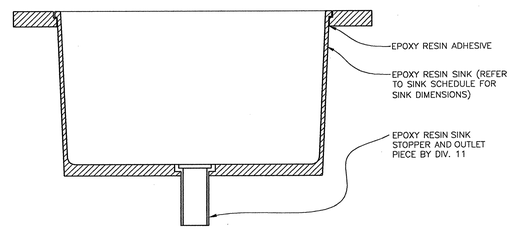

EPOXY RESIN DROP-IN SINK 3"=1'-0" (9)

tBP
architecture
planning
interiors
management

LICENSED ARCHITECT RENEWAL 12/31 REG. NO. C-8895 STATE OF CALIFORNIA

LICENSED ARCHITECT RENEWAL 08/31/2018 REG. NO. M. WEISS STATE OF CALIFORNIA

tBP/Architecture
1000 Burnett Ave, Suite 140
Concord, CA 94520
ph: 925.246.6419 fx: 925.246.6495

architect

LICENSED ARCHITECT RENEWAL 08/31/2018 REG. NO. M. WEISS STATE OF CALIFORNIA

RFD
RESEARCH FACILITIES DESIGN
3585 Fifth Avenue, Suite 300
San Diego, California 92103
PH (619) 294-4801
FAX (619) 294-4821

consultant

DESCRIPTION STAMP
BY OR OF THE STATE ARCHITECT
OFFICE OF REGULATION SERVICES
APPL. NO.
REG. NO.
DATE

agency

SAN RAMON VALLEY CENTER

CONTRA COSTA COMMUNITY COLLEGE DISTRICT

SAN RAMON, CALIFORNIA

owner

tBP project number : 2012.00

file name:

drawn by: JRS checked by:

date: 03-01-04 plot scale: 1:1

drawing title: building no.:

LAB FURNISHINGS DETAILS

drawing no.:

LF-3.1

drawing of ?

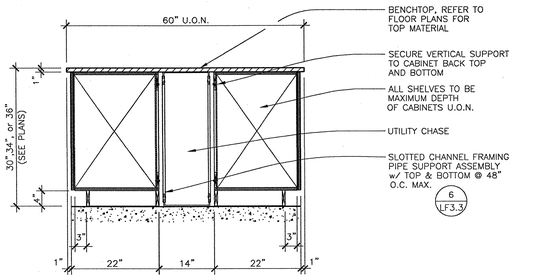

ISLAND BENCH CONVENTIONAL CASEWORK 3/4"=1'-0" (1)

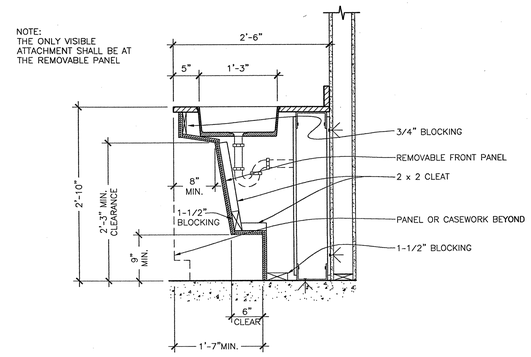

KNEE OPENING @ ADA SINK CONDITION 1"=1'-0" (2)

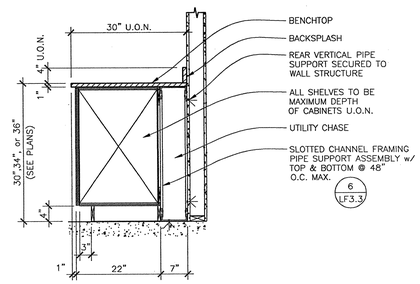

WALL MOUNTED CONVENTIONAL CASEWORK 3/4"=1'-0" (3)

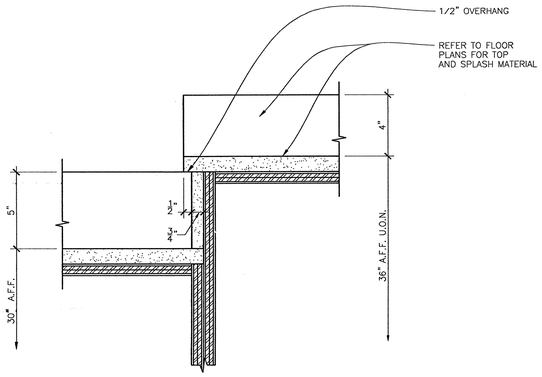

BENCHTOP TRANSITION 3"=1'-0" (4)

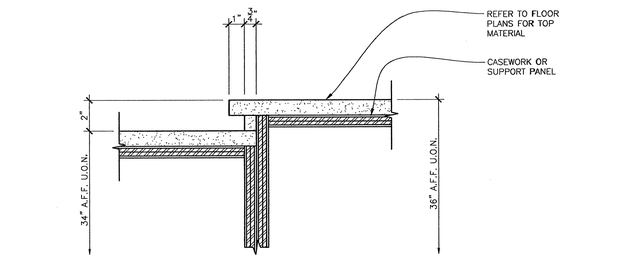

BENCHTOP TRANSITION @ ADA ISLAND 3"=1'-0" (5)

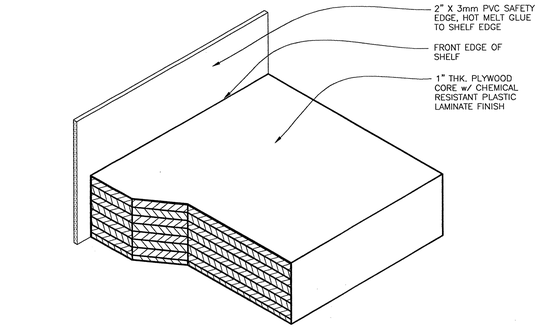

PVC SAFETY EDGE @ SHELF 12"=1'-0" (6)

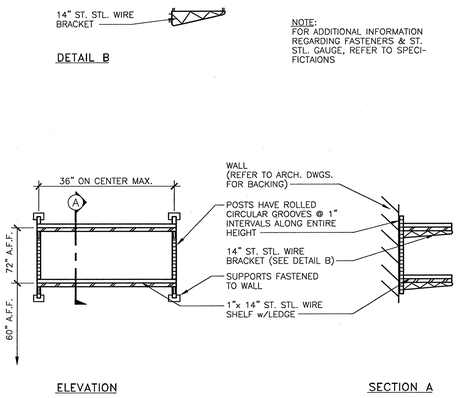

STAINLESS STEEL WALL SHELVES 3/4"=1'-0" (7)

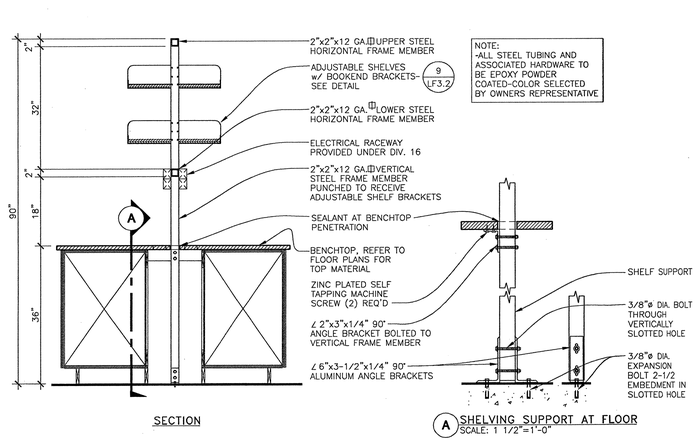

ADJUSTABLE ISLAND BENCH SHELF 3/4"=1'-0" (8)

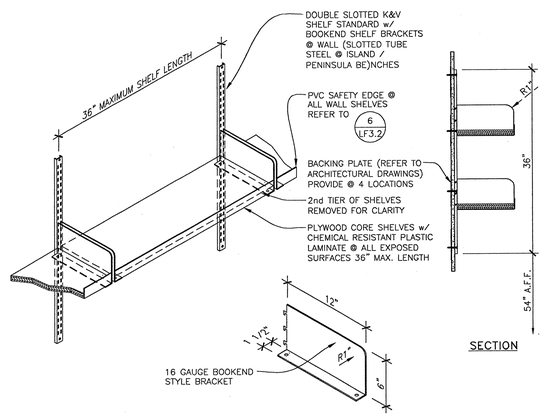

ADJUSTABLE WALL SHELVING 1"=1'-0" (9)

tBP/Architecture
1000 Burnett Ave, Suite 140
Concord, CA 94520
ph: 925.246.6419 fx: 925.246.6495

architect

RESEARCH FACILITIES DESIGN
3750 Mount Acadia Blvd, #203
San Diego, California 92111
TEL: 619 - 294 - 4901
FAX: 619 - 294 - 4907

consultant

CERTIFICATION: Approval does not constitute a district review or approval of regulation services
APPL NO. 10179
APPROVED AS NOTED
DATE

agency

SAN RAMON VALLEY CENTER
CONTRA COSTA COMMUNITY COLLEGE DISTRICT
SAN RAMON, CALIFORNIA

owner

tBP project number : 20212.09
file name:
drawn by: JRS checked by:
date: 08-09-04 plot scale: 1:1

drawing title: LAB FURNISHINGS DETAILS
building no.:
drawing no.: LF-3.2
drawing of ?

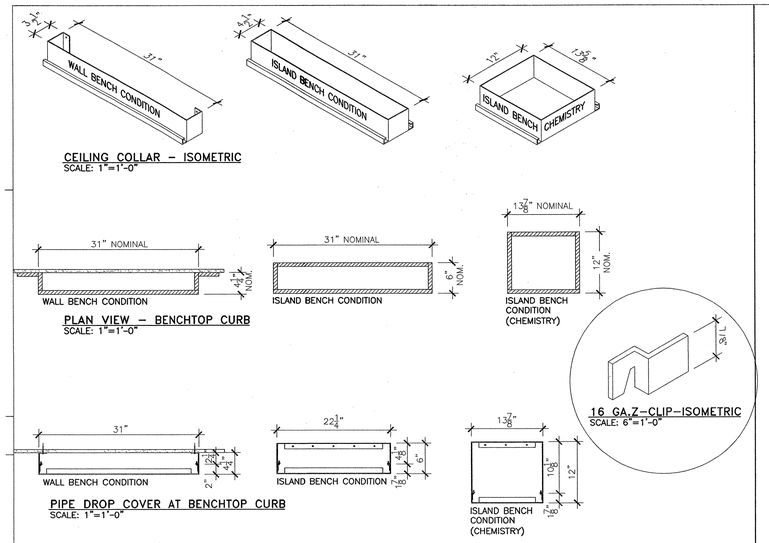

PIPE DROP ENCLOSURE

1"=1'-0" (1)

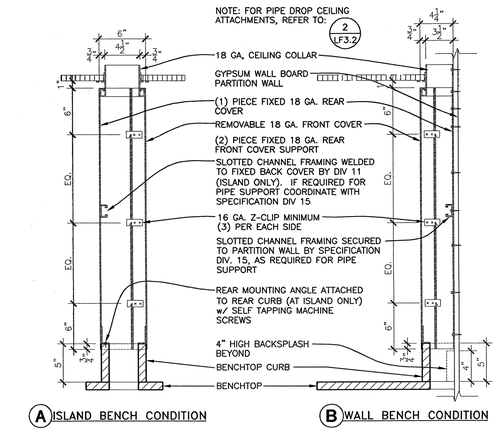

PIPE DROP SECTIONS

1-1/2"=1'-0" (2)

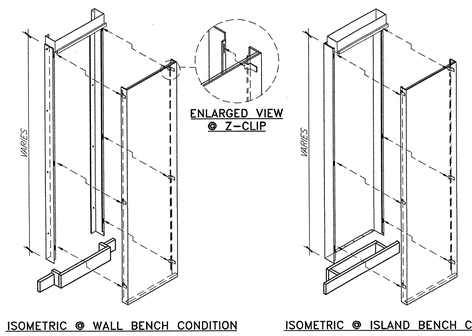

PIPE DROP ASSEMBLY VIEW

1/2"=1'-0" (3)

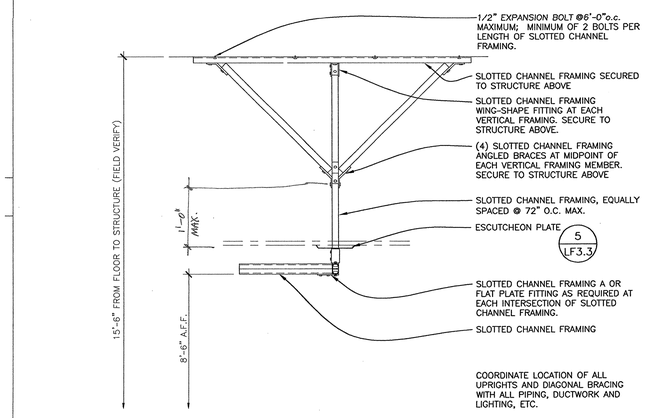

OVERHEAD SLOTTED CHANNEL FRAMING GRID

3/4"=1'-0" (4)

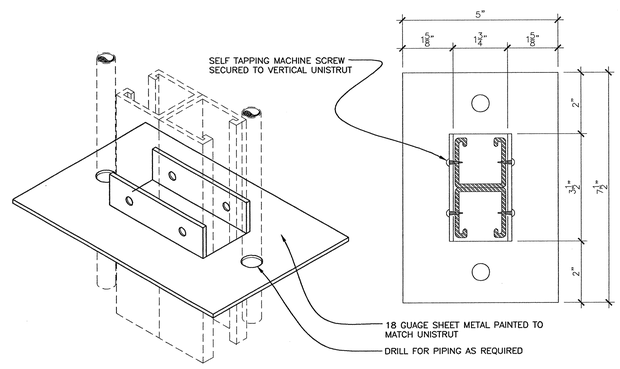

ESCUTCHEON PLATE

6"=1'-0" (5)

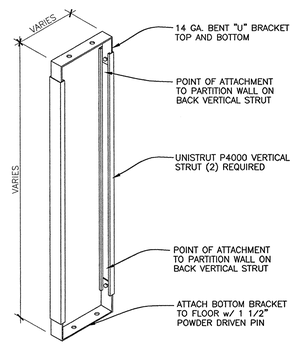

UNISTRUT PIPE SUPPORT ASSEMBLY

1 1/2"=1'-0" (6)

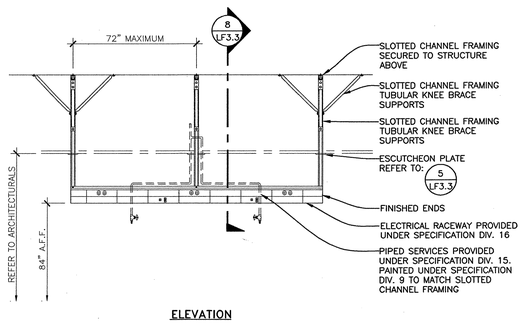

OVERHEAD SERVICE CARRIER

1/2"=1'-0" (7)

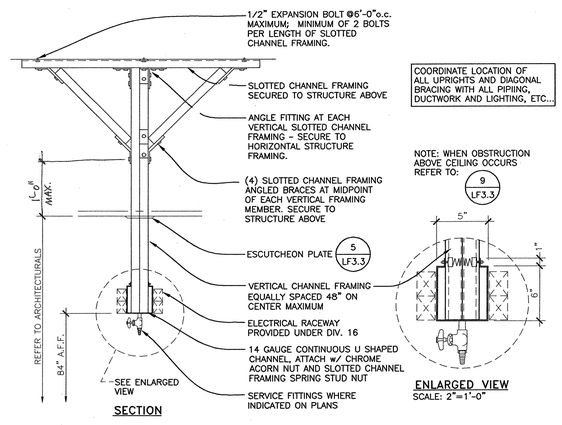

OVERHEAD SERVICE CARRIER

1"=1'-0" (8)

NOT USED

(9)

tBP
architecture
planning
interiors
management
tBP/Architecture
1000 Bunnell Ave, Suite 140
Concord, CA 94520
ph: 925.246.6419 fx: 925.246.6495
architect
RFD
RESEARCH FACILITIES DESIGN
3966 Fifth Avenue, Suite 300
San Diego, California 92103-0159
TEL 619 · 294 · 4901
FAX 619 · 294 · 4901
consultant

IDENTIFICATION STAMP
DIV. OF THE STATE ARCHITECT
OFFICE OF REGULATION SERVICES
APPL NO. 107019
DATE 12-3-04
agency

SAN RAMON VALLEY CENTER
CONTRA COSTA COMMUNITY COLLEGE DISTRICT
SAN RAMON, CALIFORNIA
owner

tBP project number : 20212.00
file name:
drawn by: JRS checked by:
date: 03-09-04 plot scale: 1:1

drawing title: LAB FURNISHINGS DETAILS
building no.:
drawing no.: LF-3.3
drawing of ?

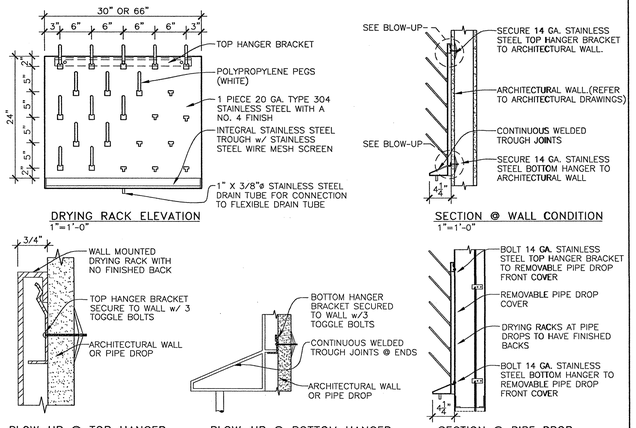

STAINLESS STEEL DRYING RACK

AS NOTED

(1)

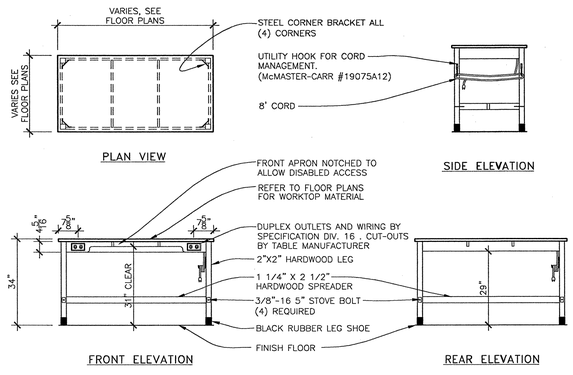

MOVABLE LABORATORY TABLE w/ DUPLEX OUTLETS

1/2"=1'-0"

(2)

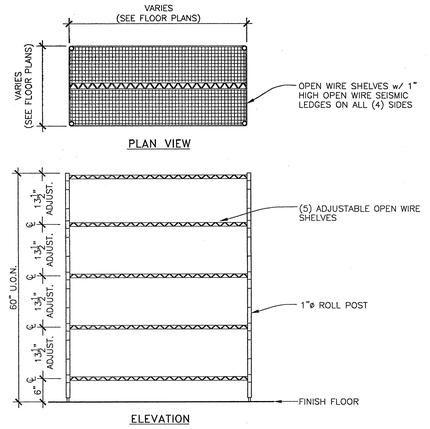

HEAVY DUTY WIRE SHELVING

3/4"=1'-0"

(3)

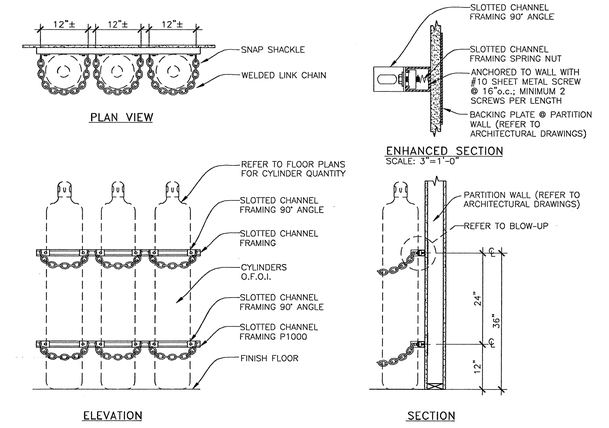

WALL MOUNTED CYLINDER RACK

3/4"=1'-0"

(4)

WALL MOUNTED SLOTTED CHANNEL FRAMING

1/2"=1'-0"

(5)

(6)

(7)

(8)

(9)

tBP
architecture
planning
interiors
management

LICENSED ARCHITECT RICHARD A. MARTIN, R.C.E. NO. C-34885 EXP. 12-31-09 STATE OF CALIFORNIA

LICENSED ARCHITECT RICHARD A. MARTIN, R.I.A. NO. C-34885 EXP. 12-31-09 STATE OF CALIFORNIA

tBP/Architecture
1000 Burnett Ave, Suite 140
Concord, CA 94520
ph: 925.246.6419 fx: 925.246.6495

architect

LICENSED ARCHITECT RICHARD A. MARTIN, R.I.A. NO. C-34885 EXP. 12-31-09 STATE OF CALIFORNIA

RFD
RESEARCH FACILITIES DESIGN
3990 Fifth Avenue, Suite 300
San Diego, California 92103-6107
TEL 619 - 297 - 0559
FAX 619 - 294 - 4001

consultant

IDENTIFICATION STAMP
DIV. OF THE STATE ARCHITECT
OFFICE OF REGIONAL PROJECTS
APPL. NO. 04-3174
I.C.S. NO.
DATE

agency

SAN RAMON VALLEY CENTER

CONTRA COSTA COMMUNITY COLLEGE DISTRICT

SAN RAMON, CALIFORNIA

owner

tBP project number : 20212.00
file name:
drawn by: JRS checked by:
date: 08-09-04 plot scale: 1:1

drawing title: LAB FURNISHINGS DETAILS

building no.:

drawing no.: LF-3.4

drawing of ?

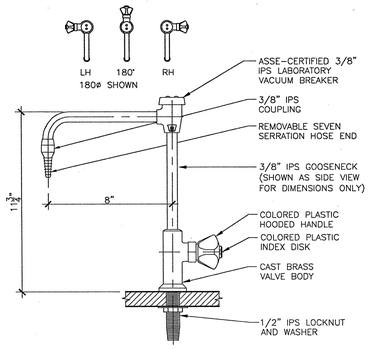

CW - DECK 3"=1'-0" (1)

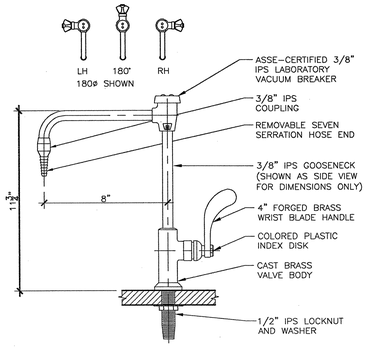

CW - DECK (ADA) 3"=1'-0" (2)

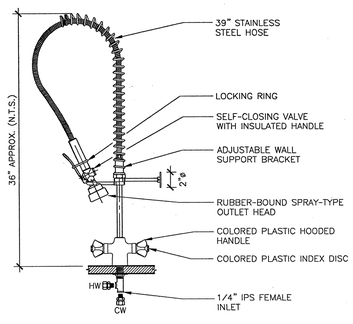

HWCW - DECK SPRAY 6"=1'-0" (3)

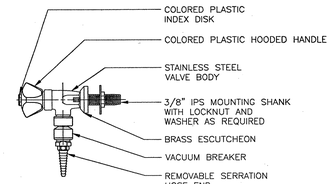

CW - PANEL 3"=1'-0" (4)

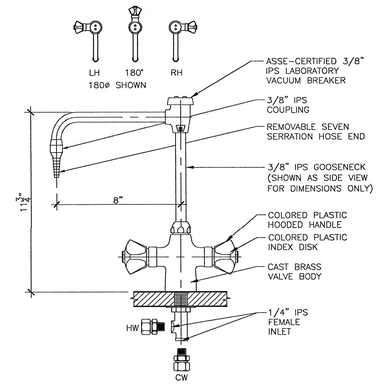

HWCW - DECK 3"=1'-0" (5)

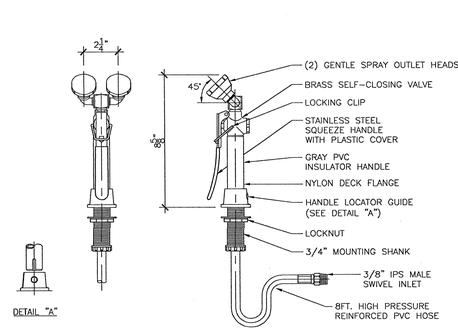

DH - DECK 3"=1'-0" (6)

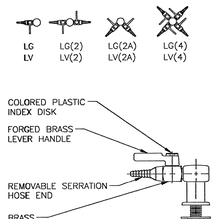

LG, LV - DECK 3"=1'-0" (7)

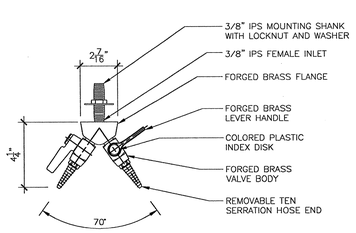

LG(2) - OVERHEAD SERVICE CARRIER 3"=1'-0" (8)

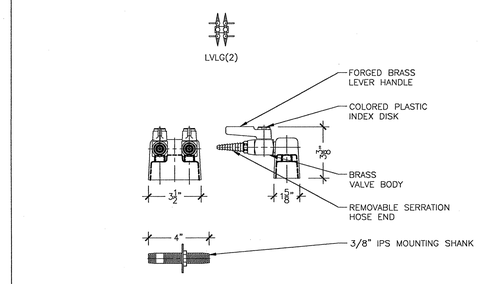

LVLG DECK (CHEMISTRY BENCHES) 3"=1'-0" (9)

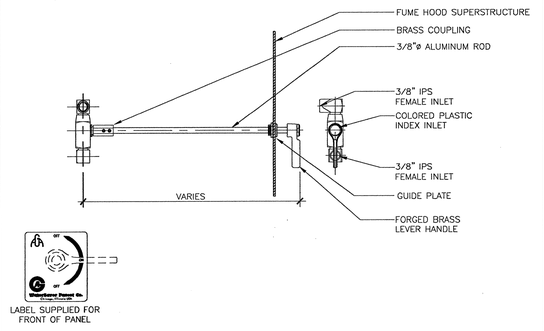

CW, LG, LV - HOOD 3"=1'-0" (10)

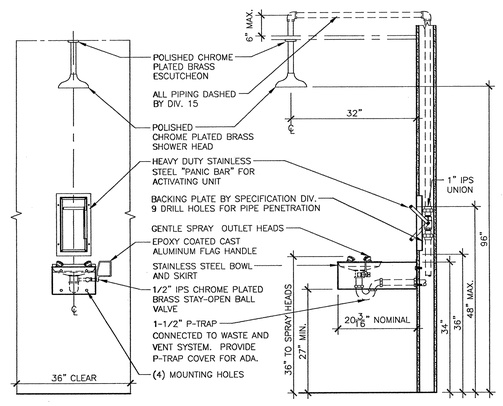

SAFETY SHOWER w/ EYEWASH 3/4"=1'-0" (11)

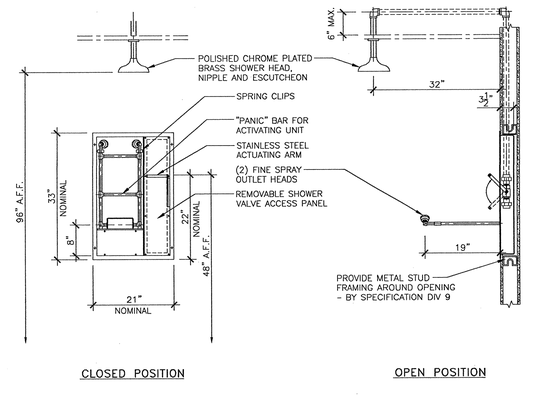

S. SHOWER w/EYEWASH (SURFACE MTD) 3/4"=1'-0" (12)

---

(13)

---

(14)

---

(15)

---

(16)

tBP
architecture
planning
interiors
management

LICENSED ARCHITECT RICHARD W. WINDOM, A.I.A. No. C-6885 RENEWAL 12-31-13 STATE OF CALIFORNIA

tBP/Architecture
1000 Burnett Ave, Suite 140
Concord, CA 94520
ph: 925.246.6419 fx: 925.246.6495

architect

LICENSED ARCHITECT RICHARD W. HEREN No. C-13668 RENEWAL 12-31-13 STATE OF CALIFORNIA

RFD
DESIGNERS & PLANNERS, INC.
2680 Fifth Avenue, Suite 300
San Diego, California 92103
619 . 294 . 4001
FAX 619 . 294 . 4001

consultant

IDENTIFICATION STAMP
DIV. OF THE STATE ARCHITECT
OFFICE OF REGULATION SERVICES
APPL. NO. 12519
I.C.
DATE

agency

agency

SAN RAMON VALLEY CENTER

CONTRA COSTA COMMUNITY COLLEGE DISTRICT

SAN RAMON, CALIFORNIA

owner

tBP project number : 2012.00

file name:

drawn by: RS checked by:

date: 08-04-04 plot scale: 1:1

drawing title: LAB FITTINGS DETAILS

building no.:

drawing no.: LF-3.5

drawing of ?

GENERAL NOTES

1. CONTRACTOR SHALL CAREFULLY EXAMINE ALL DRAWINGS AND SPECIFICATIONS TO PROPERLY DETERMINE SCOPE OF WORK.
2. CONTRACTOR SHALL FIELD VERIFY CONDITIONS AT ALL POINTS OF CONNECTION PRIOR TO INSTALLATION.
3. DIVISION 15 SCOPE OF WORK INCLUDES THE INSTALLATION OF ALL SERVICE FITTINGS AS INDICATED ON FIXTURE & EQUIPMENT SCHEDULES AND AS SHOWN ON LF– & LP– DRAWINGS. (LABORATORY SERVICE FITTINGS FURNISHED BY DIVISION 11)
4. ALL PIPING SHOWN ON DRAWINGS IS DIAGRAMMATIC. ADDITIONAL OFFSETS, WHICH MAY BE REQUIRED, IN WASTE & VENT RISERS OR IN BELOW BENCH SERVICE PIPING SHALL BE PROVIDED UNDER DIVISION 15.
5. PIPE LINES ENTERING LABORATORIES ARE SHOWN WITH WIDE SEPARATION FOR CLEAR IDENTIFICATION PURPOSES ONLY. MAINTAIN A TIGHT AND ORDERLY GROUPING OF PIPES WITHIN EACH LABORATORY. LOCATION, ROUTING AND SUPPORT OF LABORATORY PIPING SHALL BE COORDINATED WITH THE INSTALLED EQUIPMENT, OVERHEAD SERVICE CARRIERS, PIPE DROP ENCLOSURES, BUILDING STRUCTURAL ELEMENTS, DUCTWORK, ELECTRICAL CONDUITS, POWER PANELS AND LIGHT FIXTURES.
6. ALL EXPOSED TO VIEW PIPING SHALL BE INSTALLED WITH SPECIAL CARE GIVEN TO UNIFORM SPACING AND NEAT APPEARANCE. PAINT TO MATCH ROOM FINISH PROVIDED UNDER DIVISION 9.
7. PIPING, DRAINAGE AND VENT SYSTEMS TO BE INSTALLED IN ACCORDANCE WITH UNIFORM PLUMBING CODE AND LOCAL REGULATIONS.
8. VALVES AND CAPS AT POINTS OF CONNECTION ARE SHOWN ON LP–SERIES DRAWINGS FOR COORDINATION ONLY, REFER TO P–SERIES DRAWINGS FOR LOCATION AND SIZES.
9. PROVIDE REDUCERS ON POINT OF CONNECTION WHERE SIZES SHOWN ON P–SERIES DRAWINGS ARE LARGER THAN INDICATED ON LP–SERIES DRAWINGS.
10. PROVIDE STANDPIPE–TYPE AIR CHAMBER WATER HAMMER ARRESTORS ON ALL WATER PIPING FOR EACH DISTRIBUTION LINE, DOWN STREAM OF SHUT OFF VALVES.
11. PROVIDE VALVED AND CAPPED CONNECTIONS WHERE "ROUGH–IN ONLY" OR "FUTURE SERVICES" ARE INDICATED ON DRAWINGS.
12. PIPE SIZES ARE INDICATED ON THESE DRAWINGS BY MEANS OF THE POINT OF CONNECTION, SERVICE DROP, FITTING STATION AND FIXTURE & EQUIPMENT CONNECTION SCHEDULES.

    THE FOLLOWING GUIDELINES SHALL GOVERN THE PIPE SIZES:

    A. THE POINT OF CONNECTION SCHEDULE INDICATES PIPE SIZES AS SERVICES ENTER EACH LABORATORY.

       THESE SIZES SHALL EXTEND UNDIMINISHED UP TO THE LAST TEE BRANCH OF THE CEILING DISTRIBUTION PIPING.

    B. THE SERVICE DROP SCHEDULE SHALL GOVERN THE DROP AS WELL AS EACH ASSOCIATED BRANCH.

       THESE SERVICES SHALL EXTEND TO BELOW BENCH AND RUN HORIZONTALLY UNDIMINISHED IN SIZE UP TO THE LAST TEE SERVICING DIFFERENT FITTINGS.

    C. THE FIXTURE AND EQUIPMENT CONNECTION SCHEDULE SHALL INDICATE THE SIZE FOR THE FINAL SECTION OF PIPING.
13. FITTINGS ON LP–SERIES DRAWINGS ARE SYMBOLIC ONLY. REFER TO LF–SERIES DRAWINGS FOR ACTUAL FITTINGS, LOCATIONS AND ARRANGEMENTS.
14. REFER TO THE LABORATORY PLUMBING DETAILS FOR TYPICAL PIPE ROUTING BELOW AND WITHIN THE CASEWORK. THE QUANTITY, SIZE AND MATERIAL OF PIPE WILL VARY IN ACCORDANCE WITH THE TYPE OF SERVICES. INSTALL IN ACCORDANCE WITH THE PIPING ARRANGEMENT AND ORIENTATION SHOWN ON PLANS.
15. FITTING/FIXTURE INLET SIZE MAY VARY. PROVIDE APPROPRIATE CONNECTORS.
16. FLOOR DRAINS AND FLOOR SINKS ARE SHOWN ON LABORATORY PLUMBING PLANS FOR GENERAL LOCATION AND REFERENCE. BUILDING PLUMBING DRAWINGS INDICATE ACTUAL LOCATION, SIZE AND TYPE OF DEVICE.
17. NOT USED.
18. CONNECTIONS TO EYEWASHES AND/OR DRENCH HOSES TO BE PROTECTED BY BACK FLOW PREVENTERS INSTALLED ACCORDING TO UNIFORM PLUMBING CODE AND ACCEPTED BY THE AUTHORITY HAVING JURISDICTION.
19. TEST ALL VALVES, SERVICE FITTINGS, EMERGENCY SHOWERS, EYEWASHES AND DRENCH HOSES TO ENSURE PROPER OPERATION.
20. INSULATE PIPING IN ACCORDANCE WITH DIVISION 15 SPECIFICATIONS.
21. CONFORM TO ALL APPLICABLE LOCAL, STATE, FEDERAL AND HEALTH AUTHORITY CODES.
22. PROVIDE STAINLESS STEEL ESCUTCHEON PLATES FOR ALL EXPOSED PIPE PENETRATIONS IN WALLS AND CEILINGS.
23. PROVIDE MINIMUM SIZE OF 2" LABORATORY WASTE & 1–1/2" VENT RISER WHERE (W) LABORATORY WASTE POINTS OF CONNECTION SYMBOL IS INDICATED ON DRAWINGS. WASTE PENETRATIONS AT LABORATORY SINKS & CUPSINKS MAY BE OFFSET TO AVOID STRUCTURAL BEAMS AND JOISTS.
24. ALL PLUMBING VENTS SHALL EXTEND SIX INCHES ABOVE FLOOD LEVEL RIM OF FIXTURE SERVED BEFORE CHANGING FROM VERTICAL TO A HORIZONTAL POSITION.
25. REFRIGERANT PIPING AND INSULATION FROM CONDENSING UNIT TO EVAPORATOR COIL AND CONNECTION TO DRAIN PAN BY CONTROLLED TEMPERATURE CHAMBER MANUFACTURER.
26. REFERENCES TO LP DETAILS ARE SHOWN FOR EACH SPECIFIC CONDITION ON EACH LP FLOOR PLAN DRAWING. ONLY ONE REFERENCE IS SHOWN ON EACH FLOOR PLAN FOR A TYPICAL SITUATION.
27. PROVIDE CLEANOUTS AS REQUIRED IN ACCORDANCE WITH UNIFORM PLUMBING CODE OR LOCAL, STATE, FEDERAL AND HEALTH AUTHORITY. COORDINATE CLEANOUT ACCESS LOCATIONS WITH LABORATORY CASEWORK INSTALLATION.

PLAN SYMBOL LEGEND

SYMBOL	ABBREVIATION	DESCRIPTION
	SK*	LABORATORY SINK (PROVIDED UNDER DIVISION 11)
		PIPE DROP ENLOSURE (PROVIDED UNDER DIVISION 11)
		P–TRAP & TRAP ARM
	FD	FLOOR DRAIN (SHOWN FOR COORDINATION PURPOSES ONLY. REFER TO P–SERIES DRAWINGS.)
	FS	FLOOR SINK (SHOWN FOR COORDINATION PURPOSES ONLY. REFER TO P–SERIES DRAWINGS.)
		PIPING BELOW BENCH
		PIPING BELOW FLOOR
		PIPE CAPPED
		PIPE ELBOW UP (OR) UP & DOWN
		PIPE ELBOW DOWN
		PIPE TEE & ELBOW UP
		PIPE TEE & ELBOW DOWN
(W)		POINT OF CONNECTION TO 2" LABORATORY WASTE @ 6"A.F.F. & 1–1/2" LABORATORY WASTE VENT RISE @ 6"A.F.C. – U.O.N. (REFER TO P–SERIES DRAWINGS FOR CONTINUATION)
(V)		POINT OF CONNECTION TO 1–1/2" LABORATORY WASTE VENT RISE @ 6"A.F.C. (U.O.N.) (REFER TO P–SERIES DRAWINGS FOR CONTINUATION)
(W)		POINT OF CONNECTION TO 2" VERTICAL FIXTURE DRAIN @ 6"A.F.F. (ISLAND FIXTURE WASTE) (REFER TO P–SERIES DRAWINGS FOR CONTINUATION)
(V)		POINT OF CONNECTION TO 1–1/2" VERTICAL FIXTURE VENT @ 6"A.F.F. (ISLAND FIXTURE VENT) (REFER TO P–SERIES DRAWINGS FOR CONTINUATION)
		POINT OF CONNECTION TO VALVED AND CAPPED SERVICES (VALVES AND CAP PROVIDED UNDER DIVISION 15 P–SERIES DRAWINGS)
(1)		POINT OF CONNECTION NUMBER, COORDINATES PLAN WITH POINT OF CONNECTION SCHEDULE
(1)		SERVICE DROP NUMBER, COORDINATES PLAN WITH SERVICE DROP SCHEDULE
DETAIL NUMBER / DRAWING NUMBER		DETAIL REFERENCE BUBBLE COORDINATES PLAN WITH DETAIL SHEETS
	DH	DRENCH HOSE (EYEWASH)– TEPID WATER OR POTABLE WATER (FITTING FURNISHED UNDER DIVISION 11 & INSTALLED UNDER DIVISION 15)
		LABORATORY GAS SHUTOFF VALVE BOX
		PRESSURE REDUCING VALVE
	A.F.F.	ABOVE FINISHED FLOOR
	A.F.C.	ABOVE FINISHED CEILING
	SIM.	SIMILAR
	TYP.	TYPICAL
	U.O.N.	UNLESS OTHERWISE NOTED

PIPING LEGEND

PIPING/ABBREVIATION	DESCRIPTION
CW	COLD WATER (POTABLE)
HW	HOT WATER (POTABLE)
HWR	HOT WATER RETURN (POTABLE)
LG	LABORATORY GAS
LV	LABORATORY VACUUM
LW	LABORATORY WASTE
LWV	LABORATORY WASTE VENT
SCW	SOFT COLD WATER
TW	TEPID WATER
TWR	TEPID WATER RETURN

FIXTURE AND FITTING LEGEND

SKA
- DESIGNATES LABORATORY SINK
- DESIGNATES TYPES OF PLUMBING SERVICES REQUIRED AT SINK

CSA
- DESIGNATES CUP SINK
- DESIGNATES TYPES OF PLUMBING SERVICES REQUIRED AT SINK

SF1
- DESIGNATES SERVICE FITTING STATION (FURNISHED UNDER DIVISION 11)
- DESIGNATES TYPES OF PLUMBING SERVICES REQUIRED

EQ1
- DESIGNATES EQUIPMENT STATION (FURNISHED UNDER DIVISION 11)
- DESIGNATES TYPES OF PLUMBING SERVICES REQUIRED

FIXTURE CONNECTION SCHEDULE

PIPE SIZE IN INCHES

FIXTURE/FITTING NO.	TW@DH	CW	SCW	HW	LG	LV	LW P–TRAP
SKA	3/4	1/2					1–1/2
SKB		1/2					1–1/2
SKC		1/2		1/2			2
SKD	3/4	1/2		1/2			1–1/2
CSA		1/2			1/2	1/2	1–1/2

SERVICE FITTING AND EQUIPMENT CONNECTION SCHEDULE

PIPE SIZE IN INCHES

SF NUMBER	TW	CW	SCW	HW	LG	LV
SF1	1 1/4					
SF2					1/2	1/2
SF3					1/2	
SF4		1/2				
SF5		1/2		1/2		
SF6					1/2	3/4

PIPE SIZE IN INCHES

EQ NUMBER	TW	CW	SCW	HW	LG	LV
EQ1 (20x20x38 AUTOCLAVE– W/ INTEGRAL STEAM GENERATOR)		X	X	X		

NOTE: REFER TO DIVISION 11605 FOR EQUIPMENT CONNECTION SIZES.

SERVICE DROP SCHEDULE

PIPE SIZE IN INCHES

DROP NUMBER	TW	CW	SCW	HW	LG	LV
1		1/2			1/2	
2					1/2	
3	3/4	1/2		1/2	1/2	3/4
4					1/2	3/4
5		3/4			1/2	3/4
6		1			3/4	1
7		3/4		3/4		

POINT OF CONNECTION SCHEDULE

ROOM NAME	ROOM NO.	POC NO.		TW GPM	TWR GPM	CW GPM	SCW GPM	HW GPM	HWR GPM	LG** CFH	LV SCFM
PHYSICS	238	1	DESIGN FLOW	20.0		3.0				28.0	
			PIPE SIZE (IN)	1–1/4	3/4	3/4				3/4	
PREP/STORAGE (AUTOCLAVE SIDE)	239	2	DESIGN FLOW	3.0		15*	1.0*	3.0		12.0	2.0
			PIPE SIZE (IN)	3/4	3/4	1	1/2	3/4	1/2	1/2	3/4
BIOLOGY	240	3	DESIGN FLOW	20.0		3.0				32.0	1.0
			PIPE SIZE (IN)	1–1/4	3/4	3/4				3/4	1/2
BIOLOGY	235	4	DESIGN FLOW	20.0		3.0				32.0	1.0
			PIPE SIZE (IN)	1–1/4	3/4	3/4				3/4	1/2
PREP/STORAGE (WASHER SIDE)	239	5	DESIGN FLOW	20.0		7.0		6.0		16.0	3.0
			PIPE SIZE (IN)	1–1/4	3/4	1		3/4	1/2	1/2	1
CHEMISTRY	237	6	DESIGN FLOW	20.0		20.0				66.0	12.0
			PIPE SIZE (IN)	1–1/4	3/4	1–1/4				1	1–1/2

NOTES
1. TW–SS/EW – TEMPERED WATER FOR SAFETY SHOWER/EYE WASH – INSTANTANEOUS / INCIDENTAL USE.
2. FLOW RATES REPRESENT PEAK LABORATORY LOADS USED FOR PIPE SIZING AT POC. DIVERSITIES SHOULD BE APPLIED FOR SIZING FLOOR AND BUILDING SYSTEMS AND EQUIPMENT.

LEGEND
* SEE EQUIPMENT SPECIFICATIONS FOR SCW AND CW QUALITY SUPPLIED TO AUTOCLAVE.
** LG TO BE PIPED TO LABORATORIES THROUGH EMERGENCY SHUT–OFF VALVE LOCATED OUTSIDE THE LABS AS SHOWN ON DRAWINGS. ADDITIONAL SHUT–OFF VALVES WILL BE LOCATED AT EACH POC AND WITHIN EACH LABORATORY AT INSTRUCTOR'S SIDE PER LP DRAWINGS.

tBP
architecture
planning
interiors
management

1

LICENSED ARCHITECT
EMIL SANDRU
No. C-28858
RENEWAL 08-31-2005
STATE OF CALIFORNIA

LICENSED ARCHITECT
EMIL SANDRU
No. C-28858
RENEWAL 08-31-2005
STATE OF CALIFORNIA

tBP/Architecture
1000 Burnett Ave, Suite 140
Concord, CA 94520
ph. 925.246.6419 fx. 925.246.6495

architect

PROFESSIONAL ENGINEER
EMIL SANDRU
NO. 28858
REGISTERED
MECHANICAL
STATE OF CALIFORNIA

RESEARCH FACILITIES DESIGN
2657 Fourth Ave., Suite 200
San Diego, California 92103
ph. 619 · 294 · 4200
FAX 619 · 294 · 4204

consultant

DIV. OF ENGINEERING, STAMP OF REGISTERED ARCHITECT OR LICENSED ENGINEER
APR 19 2004
DEPT. OF FACILITIES PLANNING
DATE

agency

SAN RAMON VALLEY CENTER
CONTRA COSTA COMMUNITY COLLEGE DISTRICT
SAN RAMON, CALIFORNIA

owner

tBP project number : 2003.00
file name:
drawn by: JRS checked by:
date: 03-09-04 plot scale: 1:1

drawing title: LAB PLUMBING NOTES, LEGENDS & SCHEDULES
building no.:
drawing no.: LP-1.1
drawing of 7

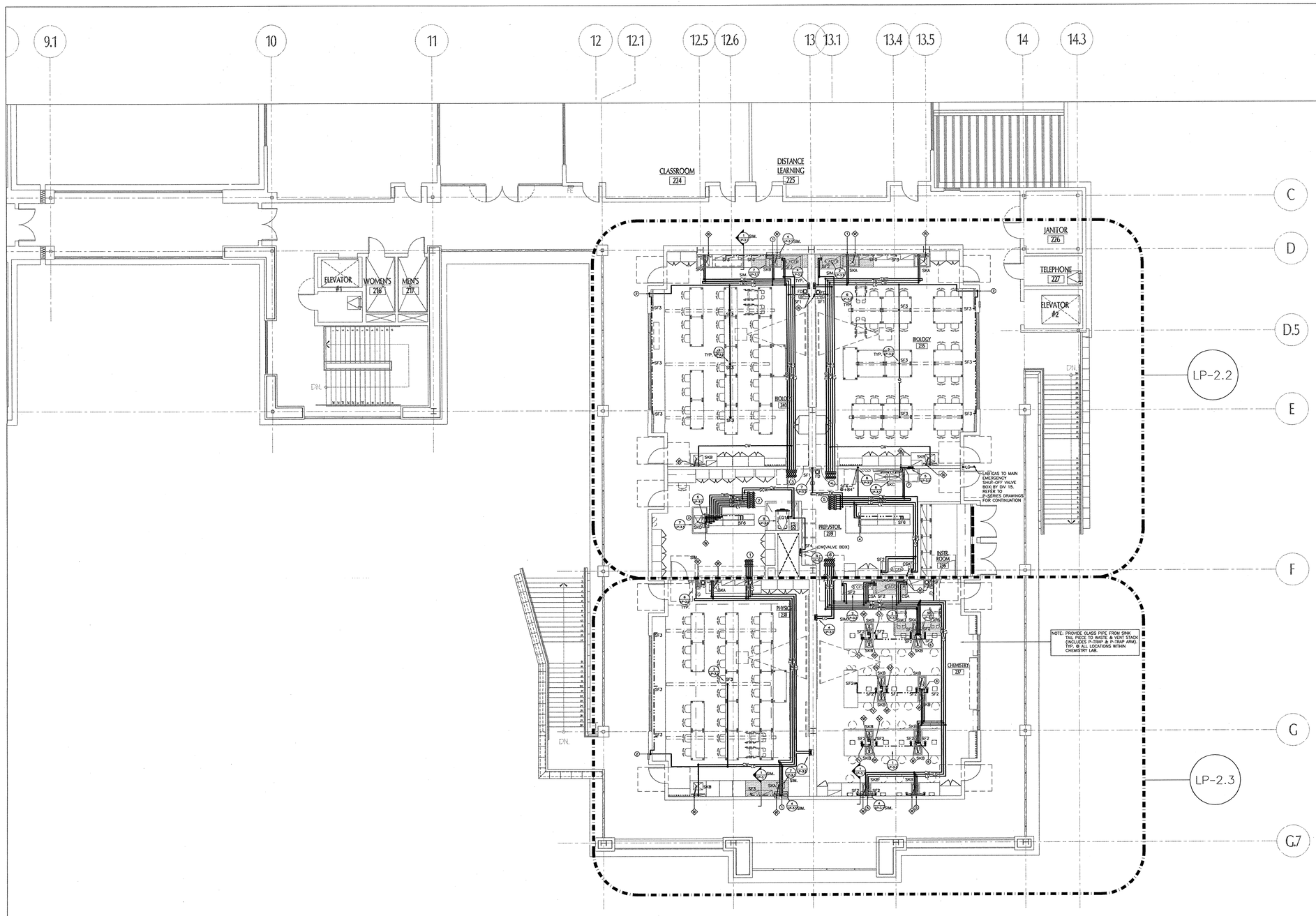

tBP
architecture
planning
interiors
management

tBP/Architecture
1000 Burnett Ave, Suite 140
Concord, CA 94520
ph: 925.246.6419 fx: 925.246.6495

architect

RFD
RESEARCH FACILITIES DESIGN
3946 Fifth Avenue, Suite 300
San Diego, California 92103
TEL 619 - 297 - 0159
FAX 619 - 294 - 4801

consultant

agency

SAN RAMON VALLEY CENTER

CONTRA COSTA COMMUNITY COLLEGE DISTRICT

SAN RAMON, CALIFORNIA

owner

tBP project number : 20212.00

file name:

drawn by: JRS checked by:

date: 03-09-04 plot scale: 1:1

drawing title: LAB PLUMBING PARTIAL 2ND FLOOR PLAN

building no.:

drawing no.: LP-2.1

drawing of ?

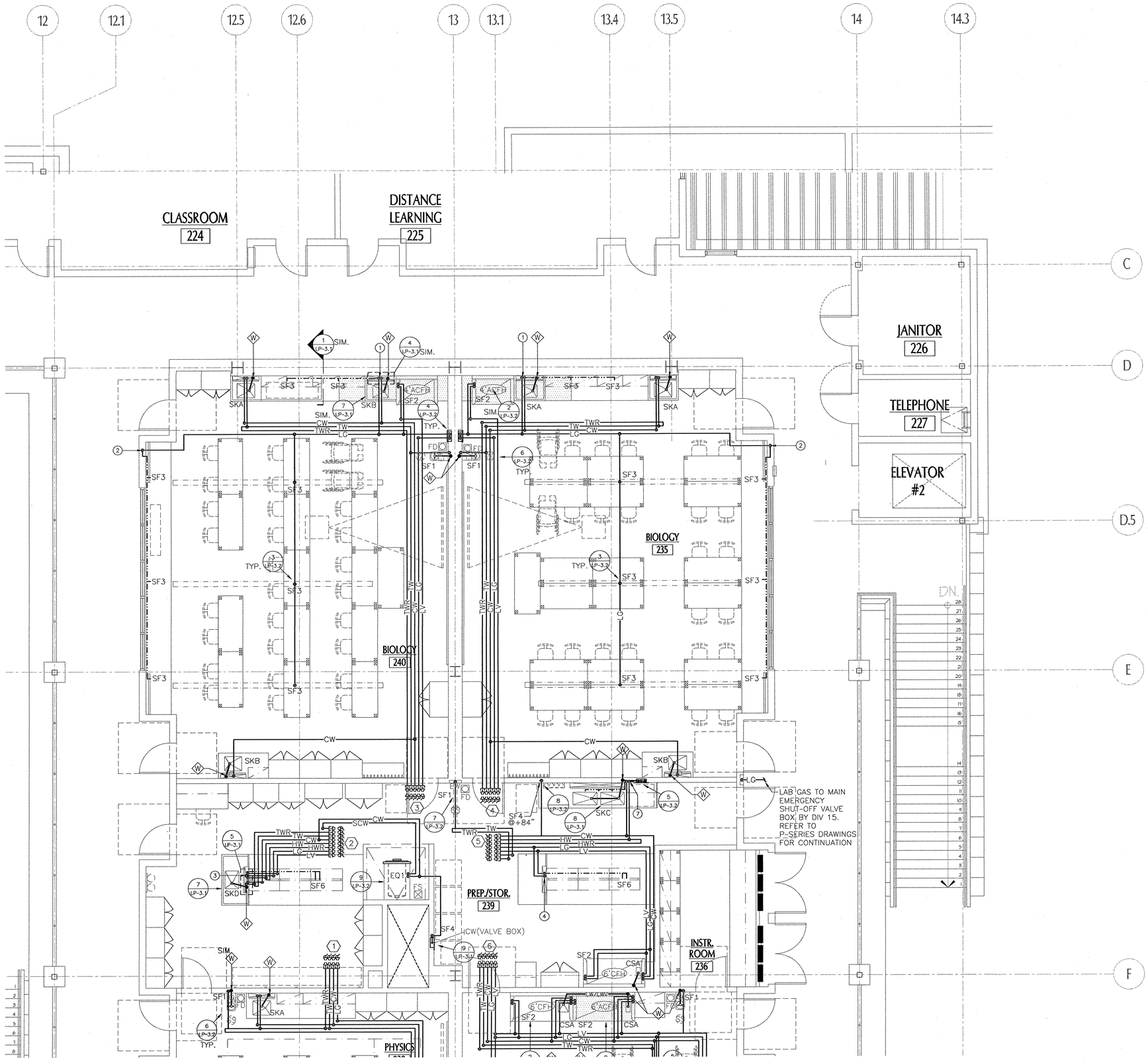

tBP
architecture
planning
interiors
management

LICENSED ARCHITECT
RICHARD A. MANGUM, AIA
NO. C-8685
REN. 12-31-05
STATE OF CALIFORNIA

tBP/Architecture
1000 Burnett Ave, Suite 140
Concord, CA 94520
ph: 925.246.6419 fx: 925.246.6495

architect

REGISTERED PROFESSIONAL ENGINEER
EMIL SANDRU
NO. 20588
EXP. 9/30/06
MECHANICAL
STATE OF CALIFORNIA

RFD
RESEARCH FACILITIES DESIGN
3965 Fifth Avenue, Suite 300
San Diego, California 92103
TEL 619 · 297 · 0759
FAX 619 · 294 · 4901

consultant

IDENTIFICATION STAMP
DIV. OF THE STATE ARCHITECT
OFFICE OF REGULATORY SERVICES
APPL NO. 125719
AC
FLS
DATE

agency

SAN RAMON VALLEY CENTER

CONTRA COSTA COMMUNITY COLLEGE DISTRICT

SAN RAMON, CALIFORNIA

owner

tBP project number : 2021200

file name:

drawn by: JRS checked by:

date: 03-09-04 plot scale: 1:1

drawing title: building no.:

LAB PLUMBING PARTIAL
2ND FLOOR PLAN

drawing no.:

LP-2.2

drawing of ?

205

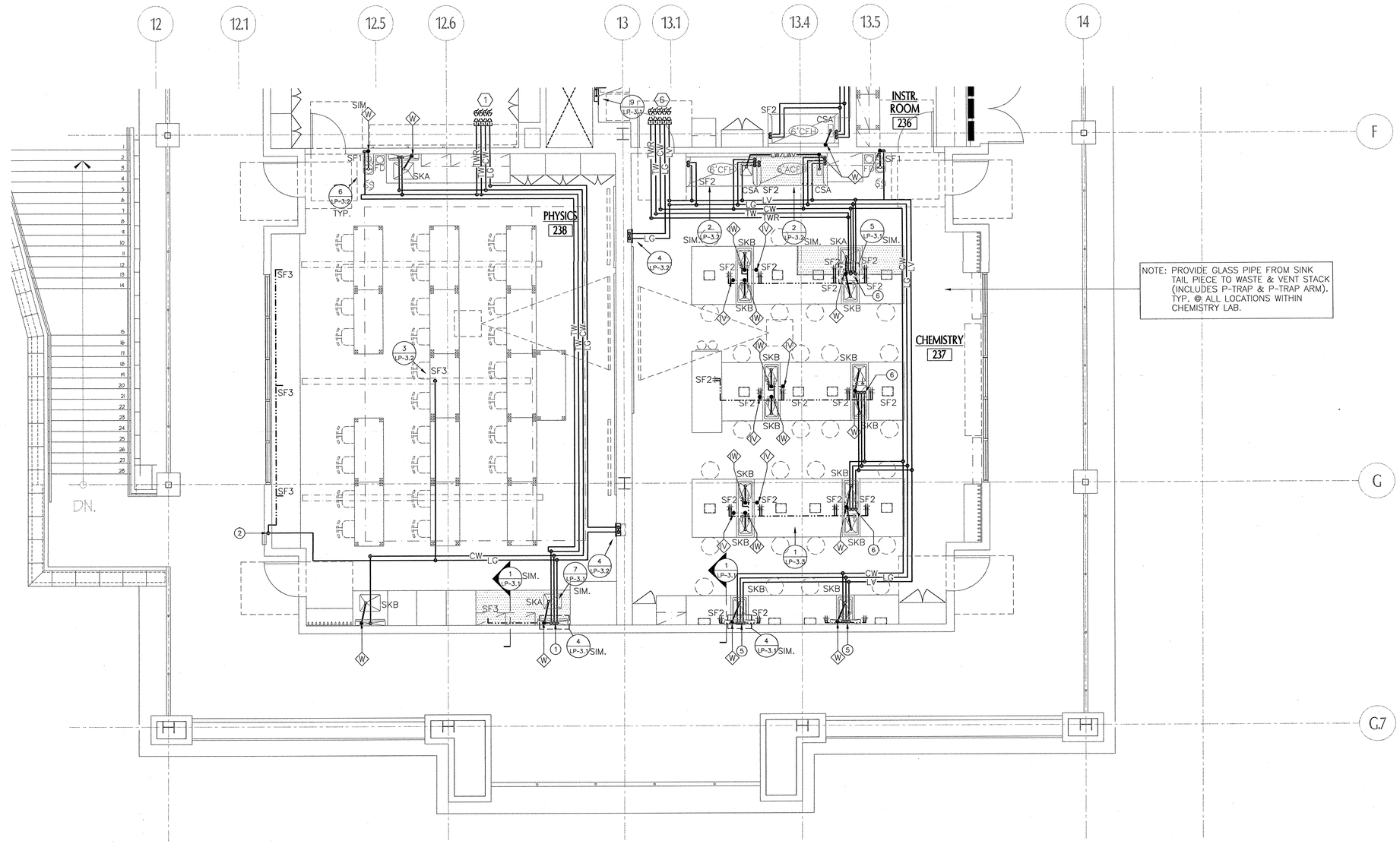

tBP/Architecture
1000 Burnett Ave, Suite 140
Concord, CA 94520
ph: 925.246.6419 fx: 925.246.6495

architecture
planning
interiors
management

architect

RESEARCH FACILITIES DESIGN
3968 Fifth Avenue, Suite 300
San Diego, California 92103
TEL 619 . 297 . 0159
FAX 619 . 294 . 4501

consultant

agency

SAN RAMON VALLEY CENTER

CONTRA COSTA COMMUNITY COLLEGE DISTRICT

SAN RAMON, CALIFORNIA

owner

tBP project number : 20212.00
file name:
drawn by: JRS checked by:
date: 03-09-04 plot scale: 1:1

drawing title: building no.:
LAB PLUMBING PARTIAL 2ND FLOOR PLAN

drawing no.:
LP-2.3
drawing of ?

206

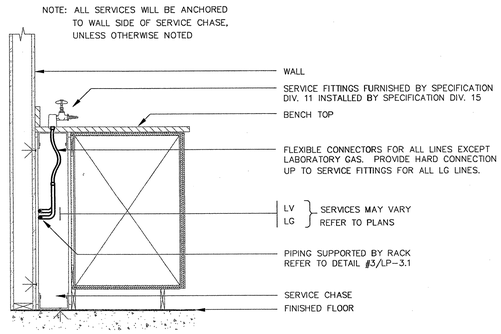

WALL BENCH SECTION

NO SCALE (1)

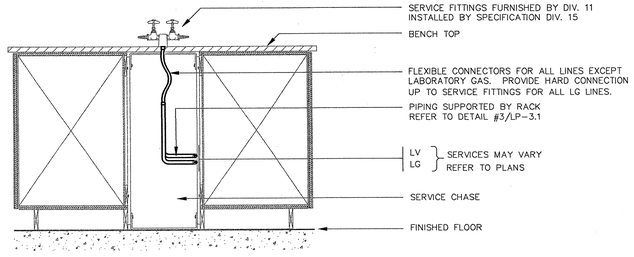

ISLAND BENCH SECTION

NO SCALE (2)

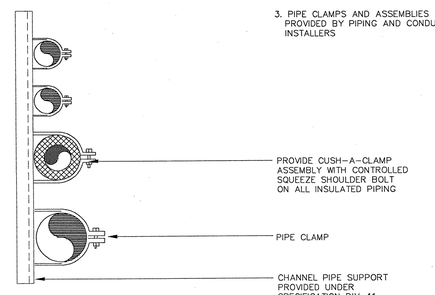

BELOW BENCH SUPPORT

NO SCALE (3)

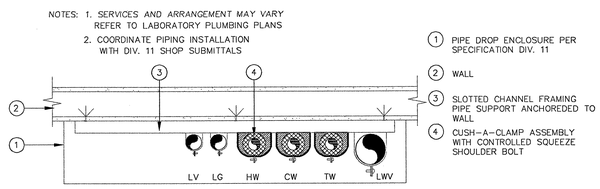

TYP. WALL PIPE DROP ENCLOSURE

NO SCALE (4)

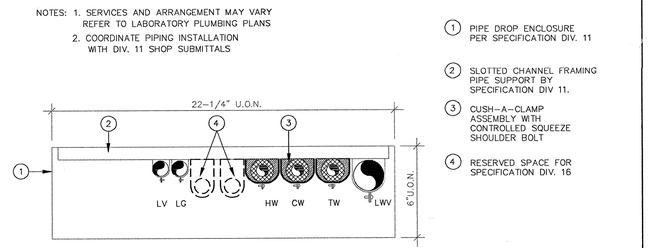

TYP. ISLAND PIPE DROP ENCLOSURE

NO SCALE (5)

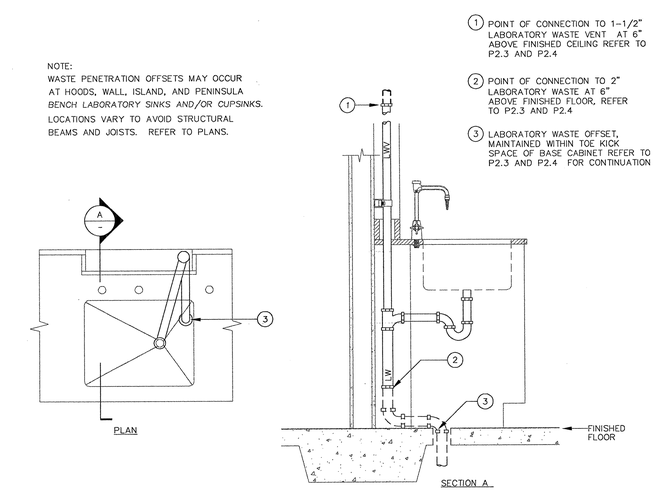

TYP. WASTE OFFSET @ SINK LOCATIONS

NO SCALE (6)

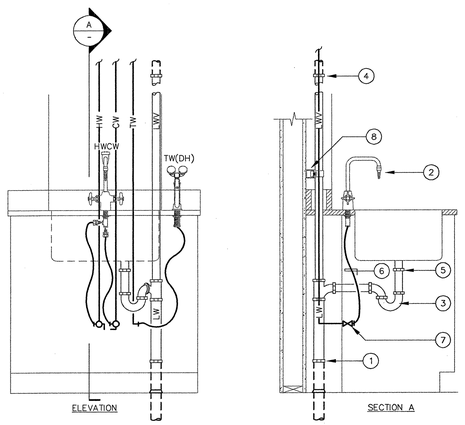

TYP. PIPING @ SINK

NO SCALE (7)

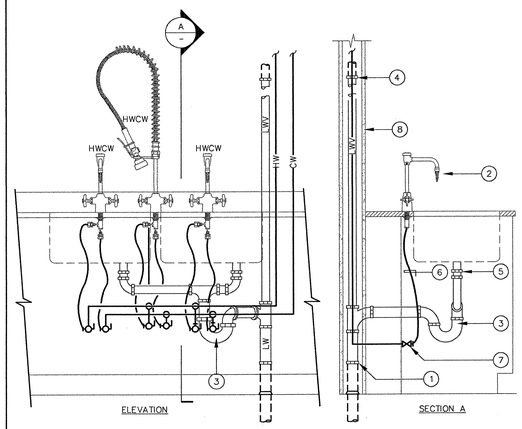

TYP. PIPING @ DOUBLE BOWL SINK

NO SCALE (8)

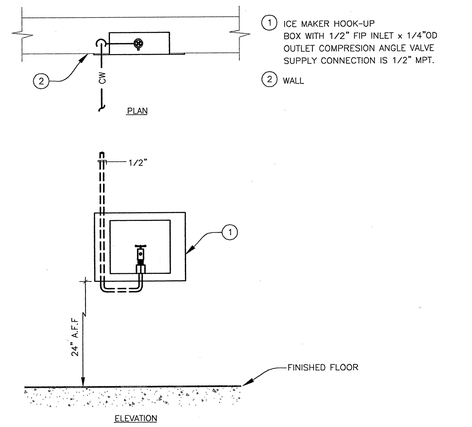

HOOKUP AT ICE MAKER

NO SCALE (9)

tBP architecture planning interiors management
tBP/Architecture
1000 Burnett Ave, Suite 140
Concord, CA 94520
ph: 925.246.6419 fx: 925.246.6495
architect
RESEARCH FACILITIES DESIGN
3090 Pullman, Suite 203
San Diego, California 92123
TEL 619 . 297 . 0505
FAX 619 . 297 . 4405
consultant
agency

SAN RAMON VALLEY CENTER
CONTRA COSTA COMMUNITY COLLEGE DISTRICT
SAN RAMON, CALIFORNIA

owner

tBP project number : 20212.00
file name:
drawn by: JRS checked by:
date: 03-09-04 plot scale: 1:1

drawing title: LAB PLUMBING DETAILS
building no.:
drawing no.: LP-3.1
drawing of ?

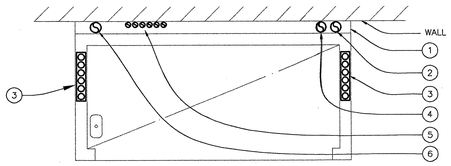

PLAN

1. FILLER PANEL PROVIDED PER DIVISION 11
2. SOLVENT CABINET VENT PIPE PER MECHANICAL, AS DETAILED PER DIVISION 11
3. * PREPIPED WET & DRY SERVICE SUPPLIES TO HOOD
4. * LOCATION OF LABORATORY WASTE AND VENT RISER FOR ADJACENT SINK
5. * SERVICES BEHIND HOOD TO FEED ADJACENT BENCH FITTINGS
6. TYPICAL LOCATION OF LABORATORY WASTE AND VENT RISER FOR HOOD CUPSINKS (ACTUAL WASTE PENETRATION LOCATIONS MAY BE OFFSETED TO AVOID STRUCTURAL BEAMS, REFER TO P.* SERIES DRAWINGS)

* SERVICES MAY VARY

TYP. PIPING @ CHEMICAL FUME HOOD - PLAN

NO SCALE (1)

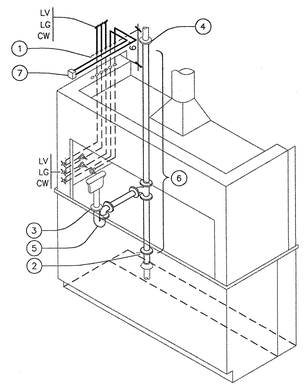

1. POINT OF CONNECTION TO PREPIPED HOOD SERVICES.
2. POINT OF CONNECTION TO 2" LABORATORY WASTE AT 6" ABOVE FINISHED FLOOR. REFER TO P-SERIES DRAWINGS.
3. POINT OF CONNECTION TO CUPSINK TAILPIECE
4. POINT OF CONNECTION TO 1-1/2" LABORATORY VENT @ 6" ABOVE FINISHED CEILING
5. 1-1/2" P-TRAP
6. LAB WASTE AND VENT RISER BEHIND HOOD
7. VACUUM BREAKER @ 7'-6" A.F.F.

NOTES:

1. SERVICES MAY VARY & OCCUR ON BOTH SIDES OF HOOD, REFER TO PLANS
2. REFER TO SCHEDULES FOR PIPE SIZES. FOR TYPICAL HOOD TOP PLAN, REFER TO DETAIL #1/LP-3.2
3. PIPING SHOWN DASHED TO BE PROVIDED UNDER DIVISION 11
4. PIPING SHOWN SOLID TO BE PROVIDED UNDER DIVISION 15

NOTE: PROVIDE GLASS PIPE FROM SINK TAIL PIECE TO WASTE & VENT STACK (INCLUDES P-TRAP & P-TRAP ARM). TYP. @ ALL LOCATIONS WITHIN CHEMISTRY LAB.

TYP PIPING @ CHEMICAL FUME HOOD w/ CUP SINK

NO SCALE (2)

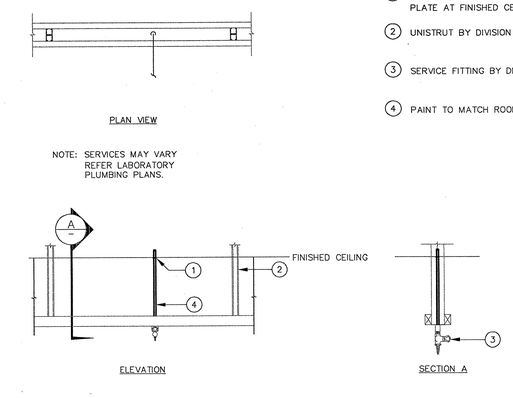

1. STAINLESS STEEL ESCUTCHEON PLATE AT FINISHED CEILING
2. UNISTRUT BY DIVISION 11
3. SERVICE FITTING BY DIVISION 11
4. PAINT TO MATCH ROOM FINISH

PIPING @ OVERHEAD SERVICE CARRIER

NO SCALE (3)

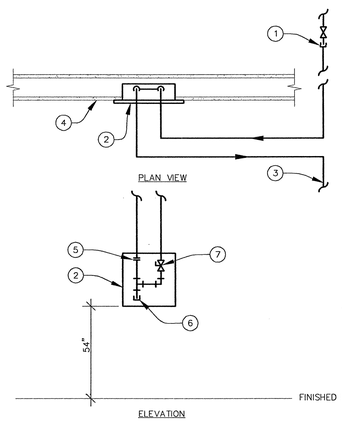

1. GAS DISTRIBUTION FROM POINT OF CONNECTION
2. 12"x12 EMERGENCY SHUT OFF VALVE BOX W/ SIGN TO READ "GAS VALVE SHUT OFF" (PER SPECIFICATIONS)
3. GAS DISTRIBUTION PIPING TO LABORATORY SERVICES (REFER TO PLANS FOR ROUTING)
4. FINISHED WALL
5. UNION CONNECTION
6. PIPE CAP
7. GAS SHUT OFF VALVE

PIPING @ GAS SHUT OFF VALVE

NO SCALE (4)

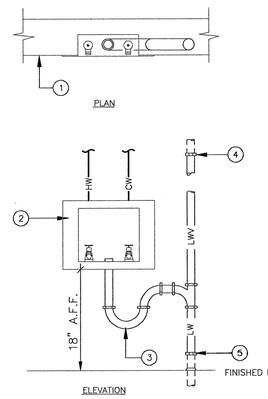

1. WALL
2. GUY GREY DRAIN BOX W/ 1/2"ICW & 1/2"IHW HOSE BIBS, 2" DRAIN & ESCUTCHEON PLATE
3. 2" P-TRAP
4. POINT OF CONNECTION TO 1-1/2" LAB VENT AT 6" ABOVE FINISHED CEILING
5. POINT OF CONNECTION TO 2" LAB WASTE AT 6" ABOVE ABOVE FINISHED FLOOR, REFER TO P.* SERIES DRAWINGS

NOTES: SERVICES MAY VARY, REFER TO PLANS

PIPING @ UNDERCOUNTER WASHER

NO SCALE (5)

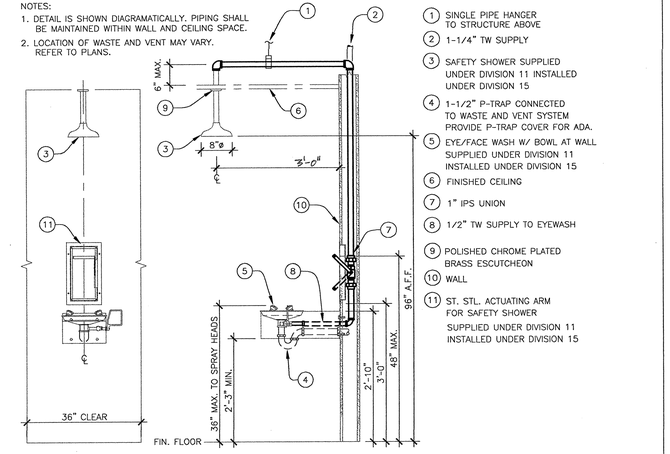

1. SINGLE PIPE HANGER TO STRUCTURE ABOVE
2. 1-1/4" TW SUPPLY
3. SAFETY SHOWER SUPPLIED UNDER DIVISION 11 INSTALLED UNDER DIVISION 15
4. 1-1/2" P-TRAP CONNECTED TO WASTE AND VENT SYSTEM PROVIDE P-TRAP COVER FOR ADA.
5. EYE/FACE WASH W/ BOWL AT WALL SUPPLIED UNDER DIVISION 11 INSTALLED UNDER DIVISION 15
6. FINISHED CEILING
7. 1" IPS UNION
8. 1/2" TW SUPPLY TO EYEWASH
9. POLISHED CHROME PLATED BRASS ESCUTCHEON
10. WALL
11. ST. STL. ACTUATING ARM FOR SAFETY SHOWER SUPPLIED UNDER DIVISION 11 INSTALLED UNDER DIVISION 15

PIPING @ SAFETY SHOWER/EYEWASH UNIT

NO SCALE (6)

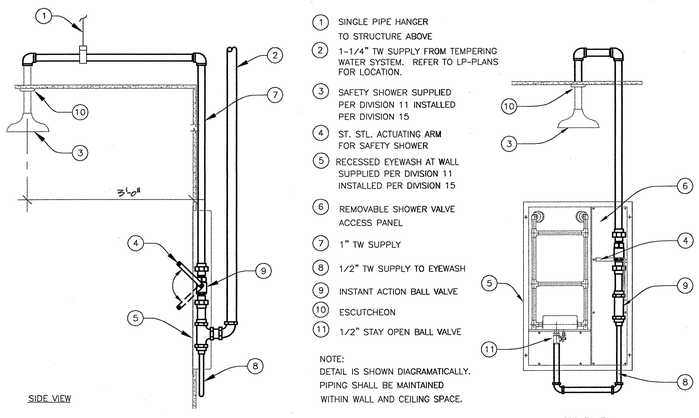

1. SINGLE PIPE HANGER TO STRUCTURE ABOVE
2. 1-1/4" TW SUPPLY FROM TEMPERING WATER SYSTEM. REFER TO LP-PLANS FOR LOCATION.
3. SAFETY SHOWER SUPPLIED PER DIVISION 11 INSTALLED PER DIVISION 15
4. ST. STL. ACTUATING ARM FOR SAFETY SHOWER
5. RECESSED EYEWASH AT WALL SUPPLIED PER DIVISION 11 INSTALLED PER DIVISION 15
6. REMOVABLE SHOWER VALVE ACCESS PANEL
7. 1" TW SUPPLY
8. 1/2" TW SUPPLY TO EYEWASH
9. INSTANT ACTION BALL VALVE
10. ESCUTCHEON
11. 1/2" STAY OPEN BALL VALVE

NOTE:
DETAIL IS SHOWN DIAGRAMATICALLY. PIPING SHALL BE MAINTAINED WITHIN WALL AND CEILING SPACE.

PIPING @ SAFETY SHOWER / RECESSED EYEWASH UNIT

NO SCALE (7)

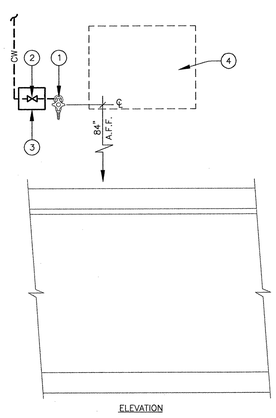

1. SERVICE FITTINGS AS SHOWN ON LF-SERIES DRAWINGS. REFER TO SCHEDULE DRAWING LP-1.1
2. SHUT OFF VALVE IN WALL. PROVIDE ACCESS PANEL.
3. ACCESS PANEL
4. OFOI WATER PURIFICATION UNIT

PIPING @ WATER PURIFICATION UNIT

NO SCALE (8)

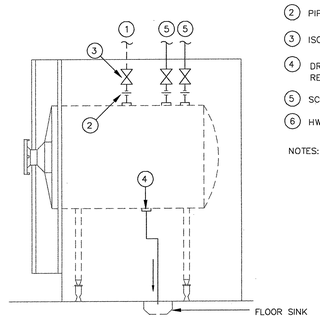

1. CW SUPPLY
2. PIPE UNION (TYPICAL)
3. ISOLATION VALVE (TYPICAL)
4. DRAIN TO FLOOR SINK. REFER TO LP AND PLUMBING PLANS
5. SCW SUPPLY
6. HW SUPPLY

NOTES: PIPE SIZES AND SERVICES MAY VARY REFER TO PLANS AND SCHEDULES

PIPING @ AUTOCLAVE

NO SCALE (9)

tBP
architecture
planning
interiors
management

LICENSED ARCHITECT RENEWAL 12/31/05 NO. C-5855 STATE OF CALIFORNIA

tBP/Architecture
1000 Bunnett Ave, Suite 140
Concord, CA 94520
ph: 925.246.6495 fx: 925.246.6495

architect

REGISTERED PROFESSIONAL ENGINEER SAMUEL SANDRUSSI NO. 28508 MECHANICAL STATE OF CALIFORNIA

RESEARCH FACILITIES DESIGN
2550 Fifth Avenue, Suite 600
San Diego, California 92103
TEL: 619 . 297 . 0506
FAX: 619 . 297 . 4501

RFD

consultant

CERTIFICATION STAMP
DIV. OF REGULATION SERVICES
OFFICE OF STATE ARCHITECT
APP. NO. 10719
BY
DATE

agency

SAN RAMON VALLEY CENTER
CONTRA COSTA COMMUNITY COLLEGE DISTRICT
SAN RAMON, CALIFORNIA

owner

tBP project number : 20212.00
file name:
drawn by: JRS checked by:
date: 03-09-04 plot scale: 1:1

drawing title: building no.:
LAB PLUMBING DETAILS

drawing no.:
LP-3.2
drawing of ?

1. POINT OF CONNECTION TO 2" LABORATORY WASTE AT 6" ABOVE FINISHED FLOOR, REFER TO P2.3 AND P2.4
2. SERVICE FITTINGS AS SHOWN ON LF-SERIES DRAWINGS. REFER TO SCHEDULE DRAWING LP-1.1
3. 1-1/2 "P" TRAP
4. POINT OF CONNECTION TO 1-1/2" LABORATORY WASTE VENT AT 6" ABOVE FINISHED CEILING REFER TO P2.3 AND P2.4
5. LABORATORY WASTE POINT OF CONNECTION TO SINK TAILPIECE
6. 1/2" DIAMETER FLEXIBLE CONNECTORS
7. SHUT-OFF VALVE
8. PIPING SUPPORTED BY RACK, SEE DETAIL #3/LP-3.1
9. POINT OF CONNECTION TO 2" VERICAL FIXTURE DRAIN @ 6"A.F.F. SEE P-SERIES DRAWINGS
10. POINT OF CONNECTION TO 1-1/2" VERICAL FIXTURE VENT @ 6"A.F.F. SEE P-SERIES DRAWINGS
11. RETURN BEND COMPOSED OF A 45°(0.79 rad), A 90°(1.6rad), AND A 45°(0.79 rad) FITTING.
12. CLEANOUT

NOTES:
1. SERVICES MAY VARY, REFER TO PLANS & SCHEDULES
2. PROVIDE SHUT-OFF VALVES IN SINK CABINET FOR CW SUPPLY TO DECK MOUNTED SERVICE FITTINGS

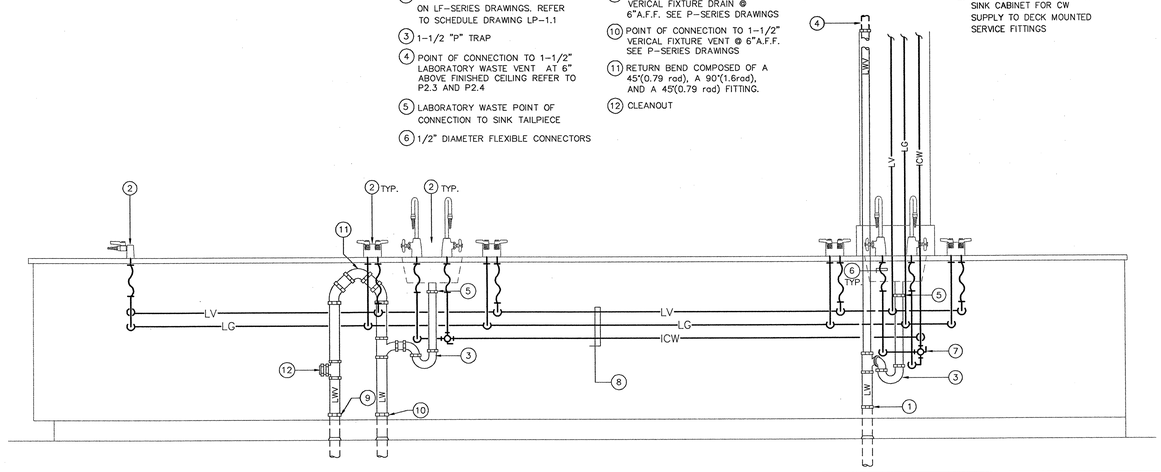

PIPING @ ISLAND BENCH LAB SINK

NO SCALE

1 2 3 4 5 6 7 8

tBP architecture planning interiors management

tBP/Architecture
1000 Burnett Ave, Suite 140
Concord, CA 94520
ph: 925.246.6419 fx: 925.246.6495

architect

RFD
RESEARCH FACILITIES DESIGN
3805 Fifth Avenue, Suite 300
San Diego, California 92103
TEL 619 · 297 · 0159
FAX 619 · 294 · 4901

consultant

agency

SAN RAMON VALLEY CENTER

CONTRA COSTA COMMUNITY COLLEGE DISTRICT

SAN RAMON, CALIFORNIA

owner

tBP project number : 20912.00

file name:

drawn by: JRS checked by:

date: 03-09-04 plot scale: 1:1

drawing title: building no.:

LAB PLUMBING DETAILS

drawing no.:

LP-3.3

drawing of ?

209

Electrical Symbol Legend

SYMBOL	DESCRIPTION
CONDUITS AND RACEWAY	
LP2A 1,3,5	SURFACE MOUNTED MULTI-OUTLET RACEWAY. LEADER WITH ARROW, IF PRESENT, INDICATES MOUNTING SURFACE. VERIFY REQ'D MOUNTING HEIGHT AND EXACT RACEWAY DIMENSIONS WITH LAB FURNISHINGS
S E	HOMERUN CONDUIT TO RACEWAY CONNECTION WITH PANEL AND CIRCUIT. 'S' INDICATES HOMERUN TO STANDBY PANEL, 'E' INDICATES HOMERUN TO EMERGENCY POWER PANEL.
	CONDUIT TO RACEWAY CONNECTION.
	PLUG IN BUSWAY.
SECTION OF RACEWAY	RACEWAY COVER SECTION AS FOLLOWS: – PROVIDE (1) 12" BLANK COVER SECTION, INSTALLED IN RACEWAY. – FOR EACH LOCATION INDICATED ALSO PROVIDE (1) ADDITIONAL 12" COVER SECTION WITH CUTOUT FOR TELECOMM OUTLET. COORDINATE CUTOUT CONFIGURATION WITH OWNER'S TELECOMM SYSTEM SUPPLIER. PROVIDE THESE TO THE OWNER FOR OWNER'S USE AS REQUIRED – REFER TO LAB ELECTRICAL DETAILS FOR TELECOMMUNICATIONS CONDUIT RISERS FROM RACEWAYS TO CEILING
	CONDUIT/WIRING, INSTALLED IN OR BELOW FLOOR SLAB. TYPICAL FOR ALL CONDUIT SYSTEMS
	CONDUIT/WIRING CONCEALED IN WALL OR CEILING SPACE. TYPICAL FOR ALL CONDUIT SYSTEMS.
	CONDUIT/WIRING RUN EXPOSED. TYPICAL FOR ALL CONDUIT SYSTEMS.
	FLEXIBLE CONDUIT, (LIQUIDTIGHT FLEX EXCEPT WHERE OTHERWISE INDICATED)
T	TELEPHONE/DATA SYSTEM CONDUIT HOMERUN ROUTED UNDERGROUND, BELOW OR IN SLAB, (2)–1" CONDUIT ONLY WITH PULLWIRE U.O.N., STUBBED OUT TO CORRIDOR CABLE TRAY SYSTEM.
T	TELEPHONE/DATA SYSTEM CONDUIT HOMERUN ROUTED IN WALL OR CEILING SPACE, (2)–1" CONDUIT ONLY WITH PULLWIRE U.O.N., STUBBED OUT TO CORRIDOR CABLE TRAY SYSTEM.
T	TELEPHONE/DATA SYSTEM CONDUIT, (2)–1" CONDUIT ONLY WITH PULLWIRE U.O.N.
E	CONDUIT/WIRING; "EMERGENCY" POWER CIRCUIT (NEC ART. 700)
S	CONDUIT/WIRING; "STANDBY" POWER CIRCUIT (NEC ART. 701, 702)
POWER RECEPTACLES/DEVICES	
TAG	DUPLEX RECEPTACLE, +18" ABOVE FINISH FLOOR, U.O.N.; NEMA 5–20R, U.O.N.; NUMBER INDICATES CIRCUIT NUMBER. TAGS: I.G. = ISOLATED GROUNDING TYPE DUPLEX RECEPTACLE WP = WEATHERPROOF TYPE RECEPTACLE V = DUPLEX RECEPTACLE FOR VARIABLE VOLTAGE REGULATOR. REGULATOR WILL BE A PLUG–IN TYPE AND WILL BE OWNER FURNISHED. GFI = GROUND FAULT INTERRUPTION AT THIS RECEPTACLE ONLY. GFIF = GROUND FAULT INTERRUPTION, FEED–THRU TYPE EXP = EXPLOSIONPROOF TYPE RECEPTACLE
	DOUBLE DUPLEX RECEPTACLE, +18" U.O.N.
	DUPLEX RECEPTACLE ABOVE COUNTERTOP BACKSPLASH, VERIFY REQ'D HEIGHT
	RECEPTACLE MOUNTED IN FRONT APRON OF CASEWORK. COORDINATE INSTALLATION WITH CASEWORK SUPPLIER FOR ADA COMPLIANCE.
	POWER RECEPTACLE, 30 AMP, 250V, 1PH, 2P, 3 WIRE, NEMA 6–30R. PROVIDE 2#10, 1#10 GND. AND 1#10 SPARE CONDUCTORS.
G	POWER RECEPTACLE, REFER TO LABORATORY POWER RECEPTACLE SCHEDULE. NEMA CONFIGURATION SHALL BE AS INDICATED BY ADJACENT LETTER TAG.
	RECEPTACLE ON STANDBY OR EMERGENCY POWER.
	POKE–THRU TYPE MULTI–SERVICE FLUSH FLOOR BOX ASSEMBLY WITH SEPARATE RECESSED WIRING/DEVICE COMPARTMENTS. FLUSH FINISH TRIM/COVER PLATE WITH INDIVIDUAL SLIDING ACCESS OPENINGS.
	DUPLEX RECEPTACLE, FLOOR MOUNTED, TWISTLOCK, NEMA L5–20R, U.O.N.
	DUPLEX RECEPTACLE, CEILING MOUNTED, TWISTLOCK, NEMA L5–20R, U.O.N.
G	CEILING MOUNTED RETRACTABLE CORD REEL, APPLETON RL5340 WITH RE–PPB DOUBLE DUPLEX OUTLET BOX AND RE–PBS–2 SHOCK ABSORBING BALL STOP.
F 60/3	DISCONNECT SWITCH, NEMA 4X NON–METALLIC ENCLOSURE. AMPERE RATING, NUMBER OF POLES AND VOLTAGE SHALL MATCH CIRCUIT RATING. FUSE SIZES SHALL BE AS INDICATED ON SPECIFIC EQUIPMENT NAMEPLATE F = FUSED 60/3 = SWITCH SIZE/POLES
J F	JUNCTION BOX (SIZE PER NEC ART. 370–6) WITH COVER, FLUSH MOUNT IN WALL AT APPROX. 48" U.O.N. (FIELD VERIFY/COORDINATE EACH LOCATION WITH OTHER WORK). PROVIDE FUSIBLE DISCONNECT SWITCH MOUNTED TO EQUIPMENT OR OTHER ACCESSIBLE LOCATION. PROVIDE EMT OR LIQUIDTIGHT FLEXIBLE METAL CONDUIT FROM BOX TO SWITCH AND FROM SWITCH TO EQUIPMENT POINT OF CONNECTION. SUPPORT AND SECURE CONDUITS PER CODE REQUIREMENTS
F	DISCONNECT SWITCH MOUNTED ON OVERHEAD SERVICE CARRIER STRUCTURE.
	PUSHBUTTON OR SHUNT TRIP STATION
SM	MANUAL MOTOR STARTER SWITCH WITH THERMAL OVERLOAD PROTECTOR
	POWER TELE/DATA POLE
	POWER/LIGHTING PANEL – FLUSH MOUNT UNLESS OTHERWISE INDICATED (NOTE: PANEL SCHEDULE MOUNTING TYPE TAKES PRECEDENCE OVER FLOOR PLAN SYMBOL.)
TELECOMM/DATA DEVICES	
TAG	TELEPHONE OUTLET BOX, 2 GANG, AT +18" U.O.N., WITH 1" C.O. (WITH PULLWIRE) TO CORRIDOR CABLE TRAY U.O.N. SEE TELECOMMUNICATIONS DRAWINGS FOR OUTLET AND WIRING REQUIREMENTS. W = MOUNTING HEIGHT OF +46"
TAG	COMBINATION DATA/TELEPHONE OUTLET BOX, 2 GANG, AT +18" U.O.N., WITH 1¼" C.O. (WITH PULLWIRE) TO CORRIDOR CABLE TRAY U.O.N. SEE TELECOMMUNICATIONS DRAWINGS FOR OUTLET AND WIRING REQUIREMENTS. W = MOUNTING HEIGHT OF +46"
OR	FLOOR MOUNTED
OR	CEILING MOUNTED
ELECTRICAL PEDESTAL BOXES	
	ELECTRICAL PEDESTAL, WITH DUPLEX RECEPTACLE AND SEPARATE BARRIERED COMPARTMENT FOR TEL/DATA.
	ELECTRICAL PEDESTAL, WITH (2) DUPLEX RECEPTACLES AND SEPARATE BARRIERED COMPARTMENT FOR TEL/DATA.
JUNCTION BOXES	
J	JUNCTION BOX (CONCEALED) WITH COVER, SIZE PER NEC, ART. 370–6.
J_C	FOR FINISH CEILINGS, MOUNT WITH COVERPLATES AT FINISH CEILING SURFACE. FOR OPEN CEILINGS, MOUNT BOX TO BOTTOM OF STRUCTURAL MEMBER.
J	JUNCTION BOX WITH COVER, FLUSH MOUNT IN WALL AT +18" U.O.N. SIZE PER NEC, ART. 370–6. PROVIDE LIQUIDTIGHT FLEXIBLE METAL CONDUIT CONNECTION FROM BOX TO EQUIPMENT SERVED
H	JUNCTION BOX (4" SQ.) FLUSH MOUNT IN WALL AT +96 U.O.N". PROVIDE FLEXIBLE METAL CONDUIT/WIRING FROM BOX TO FUME HOOD POINT OF CONNECTION
VP	JUNCTION BOX (4" SQ.) FLUSH MOUNT IN WALL AT +96" U.O.N. PROVIDE FLEXIBLE METAL CONDUIT/WIRING FROM BOX TO FUME HOOD VACUUM PUMP POINT OF CONNECTION
G	JUNCTION BOX (4" SQ.) FLUSH MOUNT IN WALL ABOVE GAS/FLAMMABLE CABINET. PROVIDE 1#10, 1/2"C. FROM GROUND LUG ON GAS/FLAMMABLE CABINET TO PANEL GROUND LUG
AV	JUNCTION BOX (3–GANG, 3–1/2" D.), STEEL CITY #GW–325–C (OR EQUAL) FLUSH WALL BOX AT +18" TO CENTERLINE, FOR AUDIO/VISUAL SYSTEM. COVER PLATE FURNISHED AND INSTALLED BY AV SYSTEM VENDOR
S	AUDIO VISUAL SYSTEMS CEILING SPEAKER ENCLOSURE FOR 8" SPEAKER (SOUNDOLIER EQ–8188EX, OR EQUAL)
J	JUNCTION BOX (4" SQ.) SURFACE MOUNT BEHIND ACCESS PANEL OF SERVICE CHASE IN CASEWORK. PROVIDE CONDUIT/WIRING FROM BOX TO CASEWORK MOUNTED DEVICES. COORDINATE WITH CASEWORK INSTALLATION
SS	FLUSH 2–GANG WALL BOX @+90", WITH COVERPLATE. CONNECT TO SAFETY SHOWER ALARM

Abbreviations

ABBREVIATION	DESCRIPTION
A	AMPS
AC	ABOVE COUNTERTOP
AF	FUSE RATING (IN AMPERES)
AFF	ABOVE FINISH FLOOR
C	CONDUIT, COUNTERTOP
CB	CIRCUIT BREAKER
C.L.	CENTERLINE
CO	CONDUIT ONLY, WITH PULL LINE
CONV	CONVENIENCE
EM	EMERGENCY POWER
EMT	ELECTRICAL METALLIC TUBING
EQ.	EQUIPMENT
EXP	EXPLOSION PROOF
F	FUSE
G	GROUND CONDUCTOR
GFI	GROUND FAULT INTERRUPT PROTECTION
GFIF	GROUND FAULT INTERRUPT PROTECTION, 'FEED–THRU' TO DOWNSTREAM DEVICES
GND	GROUND
I.G.	ISOLATED GROUND
LCL	LONG CONTINUOUS LOAD
MAX	MAXIMUM
MCB	MAIN CIRCUIT BREAKER
MIN	MINIMUM
MLO	MAIN LUGS ONLY
N/A	NON–AUTOMATIC
NEC	NATIONAL ELECTRICAL CODE
OFOI	OWNER FURNISHED, OWNER INSTALLED
OHSC	OVERHEAD SERVICE CARRIER
P	POLE, POLES
PH OR ø	PHASE
PNL	PANEL
REQ'D	REQUIRED
S	STANDBY POWER
TYP	TYPICAL, UNLESS OTHERWISE INDICATED, OF MANY
U.O.N.	UNLESS OTHERWISE INDICATED/NOTED
V	VOLTS

Feeder Schedule: 4–wire

804	CONDUCTOR & CONDUIT SIZE
204	4#12+ 1#12 GND, 3/4"C
304	4#10+ 1#10 GND, 3/4"C
404	4#8 + 1#10 GND, 3/4"C
604	4#6 + 1#8 GND, 1"C
804	4#4 + 1#8 GND, 1"C
1004	4#2 + 1#6 GND, 1¼"C
1304	4#1 + 1#6 GND, 1½"C
1504	4#1/0 + 1#6 GND, 2"C
1754	4#2/0 + 1#6 GND, 2"C
2004	4#3/0 + 1#6 GND, 2"C
2304	4#4/0 + 1#4 GND, 2½"C
2504	4#250MCM + 1#4 GND, 2½"C
3004	4#350MCM + 1#4 GND, 3"C
3504	4#500MCM + 1#4 GND, 3"C
4004	(2) SETS OF: 4#3/0 + 1#2 GND, 2½"C
5004	(2) SETS OF: 4#250MCM + 1#2 GND, 2½"C.
6004	(2) SETS OF: 4#350MCM + 1#1 GND, 3"C
8004	(3) SETS OF: 4#350MCM + 1#1/0 GND, 4"C
10004	(3) SETS OF: 4#400MCM + 1#2/0 GND, 4"C.

Feeder Schedule: 3–wire

803	CONDUCTOR & CONDUIT SIZE
203	3#12+ 1#12 GND, 3/4"C
303	3#10+ 1#10 GND, 3/4"C
403	3#8 + 1#10 GND, 3/4"C
603	3#6 + 1#8 GND, 1"C
803	3#4 + 1#8 GND, 1"C
1003	3#2 + 1#6 GND, 1¼"C
1303	3#1 + 1#6 GND, 1½"C
1503	3#1/0 + 1#6 GND, 2"C
1753	3#2/0 + 1#6 GND, 2"C
2003	3#3/0 + 1#6 GND, 2"C
2303	3#4/0 + 1#4 GND, 2½"C
2503	3#250MCM + 1#4 GND, 2½"C
3003	3#350MCM + 1#4 GND, 3"C
3503	3#500MCM + 1#4 GND, 3½"C
4003	(2) SETS OF: 3#3/0 + 1#2 GND, 2½"C
5003	(2) SETS OF: 3#250MCM+1#2 GND, 2½"C
6003	(2) SETS OF: 3#350MCM+1#1 GND, 3"C
8003	(3) SETS OF: 3#300MCM+1#1/0 GND, 4"C
10003	(3) SETS OF: 3#400MCM+1#2/0 GND, 4"C

Feeder Schedule: 2–wire

602	CONDUCTOR & CONDUIT SIZE
202	2#12+ 1#12 GND, 3/4"C
304	2#10+ 1#10 GND, 3/4"C
404	2#8 + 1#10 GND, 3/4"C
602	2#6 + 1#8 GND, 1"C

LIGHT SWITCH SYMBOL DEFINITIONS

S	LIGHT SWITCH, WALL MOUNTED AT +42"
S^{a}_{a}	a,b = INDICATES ROOM SWITCHING CIRCUITS AND NUMBER OF SWITCHES
S^{2}	TWO POLE
S^{3}	THREE WAY
S^{4}	FOUR WAY
S^{D}	DIMMER
S^{K}	KEYED
S^{OS}	OCCUPANCY SENSOR
S^{P}	PILOT LIGHT, LIGHTED IN THE 'ON' POSITION.
S^{T}	TIMER
S^{WP}	WEATHERPROOF

ALL OTHER

LP1A	LIGHTING/POWER PANELBOARD DESIGNATION
7	REFERENCE NOTE DESIGNATION
1	SPECIFIC EQUIPMENT REFERENCE NOTE

Electrical Symbol Legend Notes

1 ALL SYMBOLS SHOWN ON THIS SYMBOL LEGEND MAY NOT BE USED ON THIS PROJECT

2 SYMBOL LEGEND, ABBREVIATIONS, DIAGRAMS, DETAILS AND NOTES SHOWN ON THE LABORATORY ELECTRICAL DRAWINGS APPLY ONLY TO THE LAB ELECTRICAL DRAWINGS

Project Notes for Lab Electrical Areas

1. ALL CONDUITS SHALL CONTAIN A SEPARATE INSULATED GREEN GROUNDING CONDUCTOR. GROUND CONDUCTOR IS IN ADDITION TO CONDUCTORS INDICATED BY NOTES ON THE DRAWINGS.

2. FOR HARDWIRED EQUIPMENT, THESE DRAWINGS SHOW A BRANCH CIRCUIT AND JUNCTION BOX (AND DISCONNECT SWITCH WHERE APPLICABLE). PROVIDE CONDUIT FROM JUNCTION BOX TO EQUIPMENT POINT OF CONNECTION, OR FROM JUNCTION BOX TO DISCONNECT SWITCH, AND FROM SWITCH TO POINT OF CONNECTION. USE UP TO 3 FT. OF LIQUIDTIGHT FLEXIBLE CONDUIT BETWEEN BOX AND EQUIPMENT AND BETWEEN SWITCH AND EQUIPMENT. SECURE ALL CONDUITS IN ACCORDANCE WITH CODE REQUIREMENTS. MAKE FINAL EQUIPMENT POWER CONNECTIONS.

3. WHERE APPLICABLE, ISOLATED GROUND RECEPTACLE CIRCUITS SHALL INCLUDE A SEPARATE DEDICATED NEUTRAL, AND DEDICATED INSULATED GROUND CONDUCTOR, SIZED SAME AS PHASE CONDUCTORS.

4. FOR SURFACE METAL RACEWAYS, BRANCH CIRCUIT GROUNDING CONDUCTOR SHALL BE TERMINATED ON BONDING SCREW IN RACEWAY. PROVIDE SEPARATE GREEN GROUNDING CONDUCTOR FROM RACEWAY BONDING SCREW TO RACEWAY RECEPTACLES.

5. ALL RACEWAY MOUNTED OUTLETS SHALL MAINTAIN AN 18" CLEARANCE FROM ALL CUPSINKS, AND 12" FROM LAB SINKS.

6. REFER TO THE LAB FURNISHING DRAWINGS FOR RACEWAY AND RECEPTACLE MOUNTING HEIGHTS AND EXACT LOCATIONS.

7. ROOM DESIGNATIONS SHOWN ON PANEL SCHEDULES ARE FOR ARCHITECTURAL USE ONLY. CONTRACTOR'S FINAL PANEL SCHEDULES AND DIRECTORIES SHALL REFLECT ACTUAL ROOM DESIGNATIONS.

8. RECEPTACLES SHOWN IN FUME HOODS, LAMINAR FLOW HOODS AND BIO–SAFETY CABINETS SHALL BE PROVIDED AS AN INTEGRAL PART OF THE HOOD ASSEMBLY AND SHALL BE FACTORY PRE–WIRED TO THE HOOD ELECTRICAL POINT OF CONNECTION BY THE HOOD SUPPLIER. CONDUIT AND WIRING CONNECTION(S) FROM WALL BOX TO HOOD SHALL BE BY DIVISION 16.

9. PROVIDE SPARE BOXES AND CONDUIT HOMERUNS FROM RACEWAY COMPARTMENTS AS INDICATED IN SPECIFICATIONS.

10. JUNCTION BOXES SERVING FUME HOODS SHALL BE FLUSH MOUNTED ON WALL AT THE HEIGHT INDICATED. HORIZONTAL LOCATION OF BOX SHALL BE FIELD COORDINATED WITH PIPING AND DUCTWORK SUCH THAT AFTER ALL PIPES AND DUCTS ARE INSTALLED, BOX WILL BE ACCESSIBLE WITHOUT REMOVAL OF PIPES, DUCTS AND/OR STRUCTURES AND FINISHES. REFER TO LAB FURNISHING DRAWINGS/DETAILS AND FIELD COORDINATE WITH OTHER TRADES.

11. THE LAB BRANCH CIRCUIT CONDUIT QUANTITIES AND SIZES ARE INTENDED TO PROVIDE FOR FUTURE FLEXIBILITY AND EXPANDABILITY OF THE LAB SYSTEMS AND EQUIPMENT, TO MINIMIZE CONDUIT CROWDING AND TO MINIMIZE CONDUCTOR DERATING REQUIREMENTS. COMBINING MORE CIRCUITS THAN SHOWN INTO FEWER, LARGER CONDUITS WITHOUT WRITTEN AUTHORIZATION WILL NOT BE ACCEPTED.

12. WHERE 120 VOLT RECEPTACLES, INTENDED TO SERVE LAB BENCHTOP AREAS, ARE INSTALLED WITHIN SIX FEET (6 FT.) OF A LABORATORY SINK LOCATION IN A LAB OR LAB SUPPORT AREA, RECEPTACLES SHALL BE GROUND FAULT INTERRUPTING TYPE. 125 VOLT, 20 AMP, NEMA 5–20R DUPLEX RECEPTACLE, WITH INTEGRAL GROUND FAULT SENSING COMPONENTS AND TEST/RESET BUTTONS ON THE FACE OF THE RECEPTACLE. [NOTE THAT THE TERM LABORATORY SINK" DOES NOT APPLY TO LABORATORY "CUP SINKS"]. AS AN AID TO THE CONTRACTOR, THE PLANS ATTEMPT TO LABEL THE GFI AREAS OF PROTECTION; HOWEVER, WHERE RECEPTACLES ARE INSTALLED WITHIN THE DEFINED AREA(S), THE GFI REQUIREMENT SHALL APPLY WHETHER OR NOT THE DRAWINGS LABEL THE RECEPTACLES AND/OR ZONES OF PROTECTION.

WHERE INDICATED ON THE DRAWINGS AS "GFI", RECEPTACLES SHALL BE INTENDED TO PROVIDE GROUND FAULT SENSING ON THE INDIVIDUAL RECEPTACLE ONLY; DEVICE CIRCUITS SHALL BE CONNECTED SO THAT ADDITIONAL RECEPTACLES CONNECTED 'DOWNSTREAM' OF THE GFI RECEPTACLE WILL NOT TRIP ON GROUND FAULT CONDITIONS AT THE 'UPSTREAM' GFI DEVICE.

WHERE INDICATED ON THE DRAWINGS AS "GFIF", THE GFI DEVICE SHALL BE CONNECTED AS A FEED THROUGH DEVICE, I.E. ALL RECEPTACLES CONNECTED TO THE SAME CIRCUIT DOWNSTREAM OF THE GFI DEVICE SHALL BE PROTECTED BY THE GFI DEVICE AND WILL DE–ENERGIZE WHEN THE DEVICE TRIPS.

13. ALL WALL MOUNTED RECEPTACLES (IE. DUPLEX, POWER) SHALL BE MOUNTED AT +18" UNLESS NOTED OTHERWISE.

14. WHERE RACEWAYS SPAN DIFFERENT BENCHTOP HEIGHTS, MOUNT RACEWAY ABOVE THE HIGHEST BENCHTOP HEIGHT AND IN ONE CONTINUOUS ROW, UNLESS OTHERWISE NOTED.

15. WHERE FUME HOODS INDICATE TWO RECEPTACLES EACH SIDE, (1) EACH SIDE SHALL BE NORMAL AND CIRCUITED AS AN INTEGRAL PART OF THE FUME HOOD CIRCUIT, AND IF INDICATED, (1) EACH SIDE SHALL BE A VARIABLE VOLTAGE TYPE (DENOTED WITH A 'V') WITH A SEPARATE CIRCUIT AS INDICATED.

16. WHERE RACEWAY SECTIONS INDICATE BOTH NORMAL AND STANDBY/EMERGENCY POWER RECEPTACLES, THE STANDBY/EMERGENCY POWER SHALL BE SERVED TO SEPERATE OUTLET BOXES, FLUSH WALL MOUNTED ABOVE OR BELOW THE RACEWAY SECTION. VERIFY LOCATION OF STANDBY/EMERGENCY LOCATION.

Environmental Room Reference Notes

CR1 ALL RECEPTACLES, LIGHTING FIXTURES AND ASSOCIATED CONDUIT AND WIRING WITHIN THE ENVIRONMENTAL ROOM SHALL BE PROVIDED AND INSTALLED BY THE ROOM SUPPLIER, U.O.N. RECEPTACLES ARE SHOWN FOR INFORMATION ONLY (VERIFY MOUNTING HEIGHT OF ALL RECEPTACLES). ALL ENVIRONMENTAL ROOM RECEPTACLES SHALL BE INSTALLED IN FLUSH MOUNT BOXES, FOAMED INTO WALLS AND SHALL HAVE WEATHERPROOF COVERS WHICH MAINTAIN THEIR RATING WITH OR WITHOUT THE RECEPTACLES IN USE. CONTRACTOR SHALL PROVIDE ALL POWER CONDUIT AND WIRING OUTSIDE THE ENVIRONMENTAL ROOM. COORDINATE POINTS OF CONNECTION AND EXACT REQUIREMENTS WITH ENVIRONMENTAL ROOM SUPPLIER

CR2 PORCELAIN SOCKET WITH 100 WATT A–19 LAMP AND WIRE GUARD, PLUS 4" SQ. BOX WITH LIGHT SWITCH AND DUPLEX RECEPTACLE. MOUNT TO STRUCTURE IN ACCESS CEILING SPACE ABOVE ENVIRONMENTAL ROOM ROOF, WITHIN 18" OF ACCESS HATCH OPENING. VERIFY EXACT LOCATION WITH ARCHITECTURAL DWGS AND REFLECTED CEILING PLANS

CR3 PROVIDE 30A/3P FUSIBLE DISCONNECT SWITCH AT CONDENSING UNIT. WIRE TO MOTOR VIA MAGNETIC STARTER IN ENVIRONMENTAL ROOM CONTROL PANEL (STARTER PROVIDED BY ENVIRONMENTAL ROOM SUPPLIER). PROVIDE FUSES, SIZED PER CONDENSING UNIT NAMEPLATE. PROVIDE 3/4" C.O. FROM CONDENSING UNIT LOCATION TO CONTROL PANEL. CONTROL WIRING SHALL BE PROVIDED AND INSTALLED BY ROOM SUPPLIER. PROVIDE 3#8 + 1#10 GND, 3/4"C. FOR ALL POWER WIRING

CR4 3#10, 1#10 GND, 3/4" C.

Reference Notes (applies to all Lab Electrical drawings)

1. 4"SQ. J–BOX WITH DUPLEX RECEPTACLE, IN CEILING SPACE FOR VIDEO PROJECTOR POWER. PROVIDE (1) 1/2"C. AND 1–GANG WALL BOX WITH PULL WIRE AND BLANK COVER, NEAR ROOM DOORWAY FOR PROJECTOR CONTROLS. FIELD VERIFY EXACT LOCATION. PROVIDE (1) 4"SQ. J–BOX IN CEILING SPACE FOR TEL/DATA/VIDEO CABLING AND VIDEO PROJECTOR CONTROLS. PROVIDE (1) 3/4"C. FROM CEILING BOX TO WALL TEL/DATA BOX. FIELD VERIFY EXACT LOCATION. TYPICAL
2. 4"SQ. J–BOX IN CEILING SPACE: 2#12+GND, 1/2"C. TO PROJECTION SCREEN MOTOR. FIELD VERIFY EXACT LOCATION AND POINT OF CONNECTION. TYPICAL
3. PROVIDE THE FOLLOWING FOR PLANT GROWTH LIGHT:
   (1) #LUN4–2–LE120–CPP FIXTURE
   (2) #F40PL/AQ LAMPS
   (1) #C&#120 6' CONDUCTOR CORD AND PLUG SET
   COORDINATE MOUNTING AND EXACT LOCATION WITH LABORATORY ARCHITECT
4. REFER TO DETAIL SHEET FOR PORTABLE LAB TABLE POWER
5. REFER TO BUILDING ELECTRICAL ("E") DRAWINGS FOR 480V PANEL LOCATION
6. GAS CABINET BELOW FUME HOOD: MOUNT WALL BOX AT SAME HEIGHT AS FUME HOOD OUTLET BOX. EXTEND 1#10, 1/2"C. FROM WALL BOX DOWN TO GAS CABINET GROUND LUG

Index of Laboratory Electrical Drawings

SHEET NO.	SHEET TITLE
LE1.0	LABORATORY ELECTRICAL LEGEND, NOTES, AND SHEET INDEX
LE1.1	LABORATORY ELECTRICAL DETAILS
LE2.1	LABORATORY ELECTRICAL – OVERALL FLOOR PLAN
LE2.2	LABORATORY ELECTRICAL – PARTIAL FLOOR PLAN – LEVEL TWO
LE2.3	LABORATORY ELECTRICAL – PARTIAL FLOOR PLAN – LEVEL TWO
LE3.0	LABORATORY ELECTRICAL – PANEL SCHEDULES

Laboratory Power Receptacle Schedule

TAG	NEMA TYPE	TYPE	AMPERE RATING	VOLTS/PHASE/WIRES	CONDUCTORS	CONDUIT
A	L5–20R	TWISTLOCK	20A	125V, 1ø, 2P, 3W	2#12 + 1#12 GND	3/4"
B	L6–20R	TWISTLOCK	20A	250V, 1ø, 2P, 3W	2#12 + 1#12 GND	3/4"
BS	6–20R	STRAIGHT	20A	250V, 1ø, 2P, 3W	2#12 + 1#12 GND	3/4"
C	L14–20R	TWISTLOCK	20A	125/250V, 1ø, 3P, 4W	3#12 + 1#12 GND	3/4"
CS	14–20R	STRAIGHT	20A	125/250V, 1ø, 3P, 4W	3#12 + 1#12 GND	3/4"
D	L22–20R	TWISTLOCK	20A	277/480V, 3ø, 4P, 5W	4#12 + 1#12 GND	3/4"
DS	22–20R	STRAIGHT	20A	277/480V, 3ø, 4P, 5W	4#12 + 1#12 GND	3/4"
F	L21–20R	TWISTLOCK	20A	120/208V, 3ø, 4P, 5W	4#12 + 1#12 GND	3/4"
FS	21–20R	STRAIGHT	20A	120/208V, 3ø, 4P, 5W	4#12 + 1#12 GND	3/4"
G	L5–30R	TWISTLOCK	30A	125V, 1ø, 2P, 3W	2#10 + 1#10 GND	3/4"
GS	5–30R	STRAIGHT	30A	125V, 1ø, 2P, 3W	2#10 + 1#10 GND	3/4"
H	L6–30R	TWISTLOCK	30A	250V, 1ø, 2P, 3W	2#10 + 1#10 GND + 1#10 SPARE	3/4"
HS	6–30R	STRAIGHT	30A	250V, 1ø, 2P, 3W	2#10 + 1#10 GND	3/4"
J	L14–30R	TWISTLOCK	30A	125/250V, 1ø, 3P, 4W	3#10 + 1#10 GND	3/4"
JS	14–30R	STRAIGHT	30A	125/250V, 1ø, 3P, 4W	3#10 + 1#10 GND	3/4"
K	L21–30R	TWISTLOCK	30A	120/208V, 3ø, 4P, 5W	4#10 + 1#10 GND	3/4"
KS	21–30R	STRAIGHT	30A	120/208V, 3ø, 4P, 5W	4#10 + 1#10 GND	3/4"
L	L14–50R	TWISTLOCK	50A	125/250V, 1ø, 3P, 4W	3#6 + 1#8 GND	1"
LS	14–50R	STRAIGHT	50A	125/250V, 1ø, 3P, 4W	3#6 + 1#8 GND	1"
M	15–50R	STRAIGHT	50A	250V, 3ø, 3P, 4W	3#6 + 1#8 GND	1"
N	15–60R	STRAIGHT	60A	250V, 3ø, 3P, 4W	3#4 + 1#10 GND	1"
P	L15–30R	TWISTLOCK	30A	250V, 3ø, 4P, 4W	3#10 + 1#10 GND	3/4"
QS	15–20R	STRAIGHT	20A	250V, 3ø, 4P, 4W	3#12 + 1#12 GND	3/4"

ALL UNTAGGED POWER RECEPTACLES SHALL BE TYPE 'H', UNLESS OTHERWISE INDICATED. POWER RECEPTACLES SHALL BE INSTALLED IN DEDICATED CONDUIT HOMERUNS.

ALL WIRING SHALL BE AS FOLLOWS, EXCEPT WHERE OTHERWISE INDICATED:

- USE 3/4" CONDUIT, MINIMUM SIZE;
- PROVIDE (1) INSULATED GREEN GROUND CONDUCTOR, PER CONDUIT, SIZED PER N.E.C. ARTICLE # 250; BOND AT ALL BOXES AND DEVICES
- 1#12 PHASE CONDUCTOR PER 120 V, 20 AMP CIRCUIT.
- NEUTRAL CONDUCTOR:
  –– Each neutral conductor may carry the load of up to three separate phase conductors only
  –– In no case shall a neutral conductor be utilized for two conductors of the same phase.
  –– A #10 combined circuit neutral shall carry only the loads of individual, 120 volt circuits protected by overcurrent devices not exceeding 20 amps.
  –– In no case shall a #10 neutral serving a 30 amp circuit be combined with any other single or multi–phase circuits.
  –– All circuits exceeding 20 amps in overcurrent protection shall be provided with a dedicated, individual neutral conductor, sized per N.E.C. requirements

tBP architecture planning interiors management
tBP/Architecture
1000 Burnett Ave, Suite 140
Concord, CA 94520
ph: 925.246.6419 fx: 925.246.6495

REGISTERED ARCHITECT — VIRGINIA — No. 0–4655 — STATE OF CALIFORNIA

architect

REGISTERED PROFESSIONAL ENGINEER — RENATO A. SEMENZA — NO. E10897 — EXP. 12-31-06 — STATE OF CALIFORNIA

SEMENZA ENGINEERING
CONSULTING ELECTRICAL ENGINEERS
1176 BENICIA ROAD, SUITE A
VALLEJO, CALIFORNIA 94591
TEL (707) 747-1001 FAX (707) 747-1004

consultant

IDENTIFICATION STAMP — DIV. OF THE STATE ARCHITECT — OFFICE OF REGULATION SERVICES — APPL. NO. 07-119 — AC. — FIS — DATE

agency

SAN RAMON VALLEY CENTER

CONTRA COSTA COMMUNITY COLLEGE DISTRICT

SAN RAMON, CALIFORNIA

owner

tBP project number : 2021.00

file name:

drawn by: MJL checked by: RAS

date: 03-09-04 plot scale: 1:1

Rev. date: description:

drawing title: building no.:

SAN RAMON VALLEY CENTER

drawing no.:

LE1.0

drawing of

PLOTTED BY: OWNER DATE: 05 MAR 2004 TIME: 10:05 FILENAME: 231–LE1.00.DWG
Initial Setup: 2002–12–20, 35 % C.O. 2003–02–14, 90 % C.O. 2003–06–22, 100% C.O. 2003–08–19, Final 100% CD, DSA approved 2004–03–05
[W:\Revit\231 Projects\Sheet\1.0.dgn]

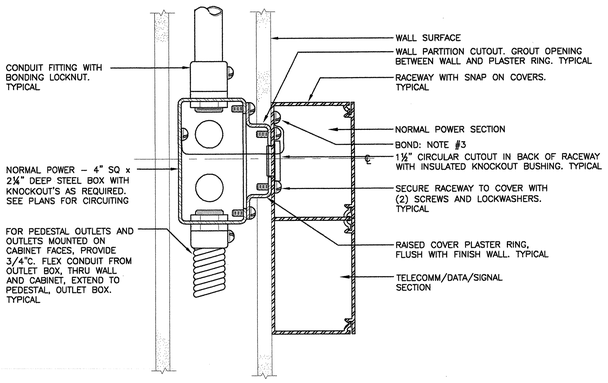

NOTES:

1. USE THIS METHOD FOR EACH SYSTEM ENTERING WALL MOUNTED RACEWAY. (TYPICAL FOR NORMAL POWER, STANDBY POWER, AND FOR TELE/COMM). OFFSET JUNCTION BOXES HORIZONTALLY ALONG WALL TO AVOID CONFLICT BETWEEN BOXES AND CONDUITS
2. ALL CONNECTORS AND LOCKNUTS SHALL BE U.L. APPROVED AS BONDING TYPE
3. BOND RACEWAY HOUSING TO CONDUIT SYSTEM: *PROVIDE #10 BOND JUMPER FROM JUNCTION–BOX TO RACEWAY* HOUSING. TERMINATE WITH APPROVED GROUNDING SCREWS OR CLIPS
4. SEE LAB FURNISHING DRAWINGS FOR STANDBY OUTLET MOUNTING HEIGHT ABOVE RACEWAYS

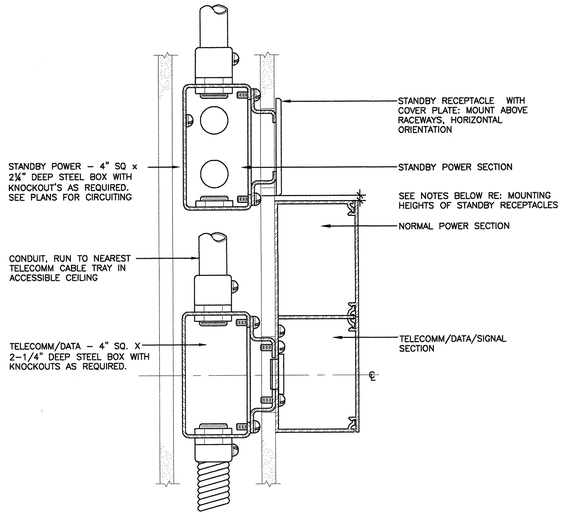

NOTES:

1. FOR THIS PROJECT, PROVIDE (1) WALL OUTLET BOX AND (1)1–1/4" CONDUIT RISER TO NEAREST CABLE TRAY, FOR EACH 8 FT. LENGTH OF RACEWAY. TYPICAL FOR ALL TELECOMM/DATA SURFACE RACEWAYS, U.O.N.
2. REFER TO TELECOMMUNICATIONS SPECIFICATIONS AND DRAWINGS FOR TELECOMM/DATA WIRING, DEVICES AND COVER PLATE REQUIREMENTS

Detail – Wall Entry Into And Above Raceway – Power And Telecommunications/Data

NOTES

1. FOR AREAS WITH FINISH CEILINGS, JUNCTION BOXES SHALL BE FLUSH WITH FINISH CEILING AND COVER PLATES SHALL BE STAINLESS STEEL.
2. FOR AREAS WITH STRUCTURAL, PRE–CAST CEILINGS (AND NO FINISH CEILING), CEILING J–BOXES AND HOMERUN CONDUITS SHALL BE SURFACE MOUNTED TO BOTTOM OF STRUCTURE. COVER PLATES SHALL BE GALVANIZED STEEL
3. PROVIDE A MINIMUM OF ONE (1) TELE/DATA CEILING JUNCTION BOX, CONDUIT RUN AND VERTICAL DROP TO EACH OVERHEAD SERVICE CARRIER. PROVIDE ONE ADDITIONAL BOX, CONDUIT AND VERTICAL DROP FOR EACH 30 LINEAR FEET (OR PART OF) OF RACEWAY LENGTH. DROPS TO SIGNAL SECTION OF RACEWAYS SHALL UTILIZE PULLING ELBOW TO MINIMIZE TURNING RADIUS AND PENETRATE INTO BACK OF RACEWAY.

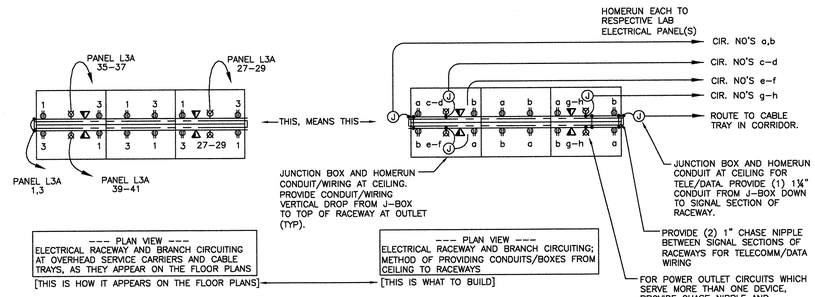

Detail – Overhead Service Carrier Electrical Installation

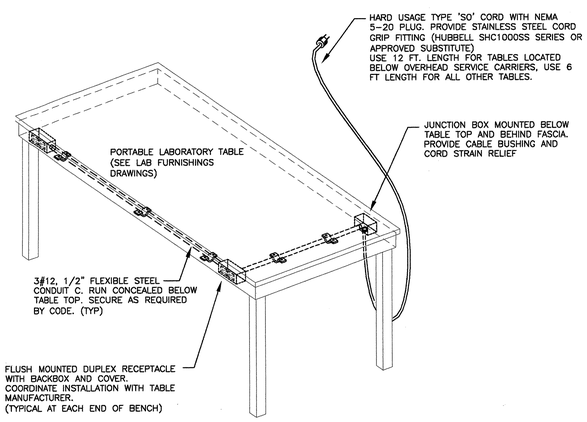

NOTE:

REFER TO LAB FURNISHINGS DRAWINGS FOR NUMBER OF RECEPTACLES PER TABLE AND MOUNTING LOCATIONS.

Detail – Portable Lab Table Power

NO SCALE

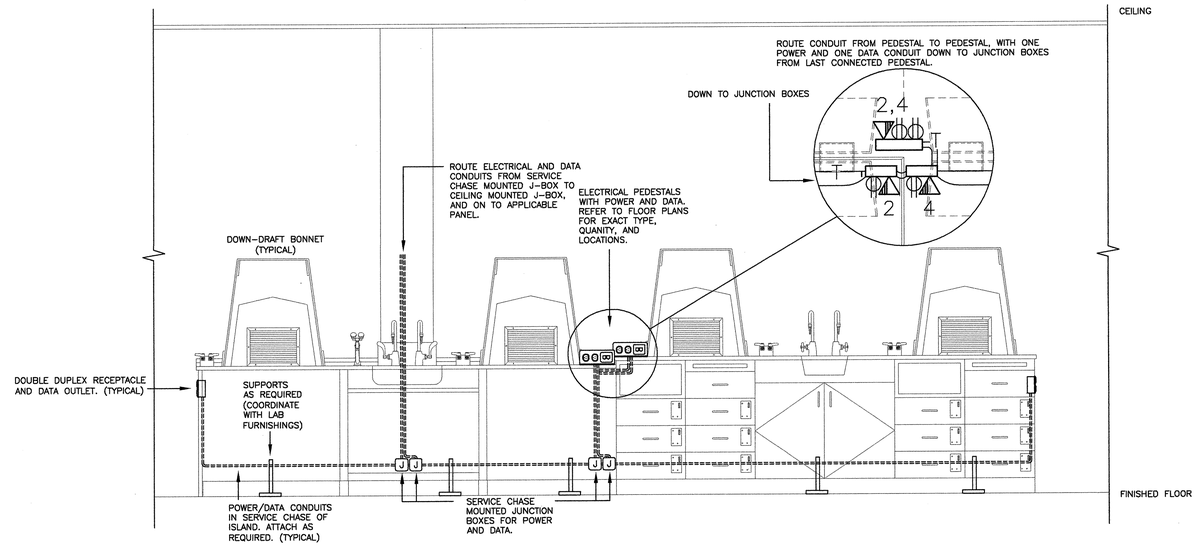

Detail – Island Power and Data Layout

NO SCALE

tBP
architecture
planning
interiors
management
tBP/Architecture
1000 Burnett Ave, Suite 140
Concord, CA 94520
ph: 925.246.6419 fx: 925.246.6495
architect
SEMENZA ENGINEERING
Civil • Structural • Geotechnical
1156 Sunrise Way, Livermore, CA 94551
Tel: (925)292-3551 Fax: (925)292-3554
consultant

REGISTERED PROFESSIONAL ENGINEER
RENATO A. SEMENZA
NO. E10897
EXP. 12-31-06
STATE OF CALIFORNIA

IDENTIFICATION STAMP
DIV. OF THE STATE ARCHITECT
OFFICE OF REGULATION SERVICES
APPL. NO. 4C7719
BY
DATE

agency

SAN RAMON VALLEY CENTER
CONTRA COSTA COMMUNITY COLLEGE DISTRICT
SAN RAMON, CALIFORNIA

owner

tBP project number : 20212.00
file name:
drawn by: K.L.L checked by: R.A.S
date: 03-04-04 plot scale: 1:1

Rev.	date:	description:

drawing title: building no.:
SAN RAMON VALLEY CENTER
drawing no.:
LE1.1
drawing of

PLOTTED BY: OWNER DATE: 04 MAR 2004 TIME: 10:05 FILENAME: J:\21-LE1.DWG
PLOT SCALE: 1.0000 '=' UNITS PLOT STYLE TABLE: ACAD.CTB LAYOUT: LE1.1 XREF'S: C.D. 2003-08-19; Final 100% CD, DSA approved 2004-03-05
[BE ABSOLUTELY DETERMINED TO ENJOY WHAT YOU DO]

architect
tBP/Architecture
1000 Burnett Ave, Suite 140
Concord, CA 94520
ph: 925.246.6419 fx: 925.246.6495
architecture
planning
interiors
management

consultant
SEMENZA ENGINEERING
Consulting Electrical Engineers
Civil Surveying
Owner Relations
Tel: (925) 930-9500 Fax: (925) 930-9504

agency

CONTRA COSTA COMMUNITY COLLEGE DISTRICT

SAN RAMON, CALIFORNIA

SAN RAMON VALLEY CENTER

owner

tBP project number : 202200
file name:
drawn by: MJL checked by: RAS
date: 03-04-04 plot scale: 1:1

Rev.	date:	description:

drawing title: SAN RAMON VALLEY CENTER
building no:
drawing no: LE-2.1
drawing of

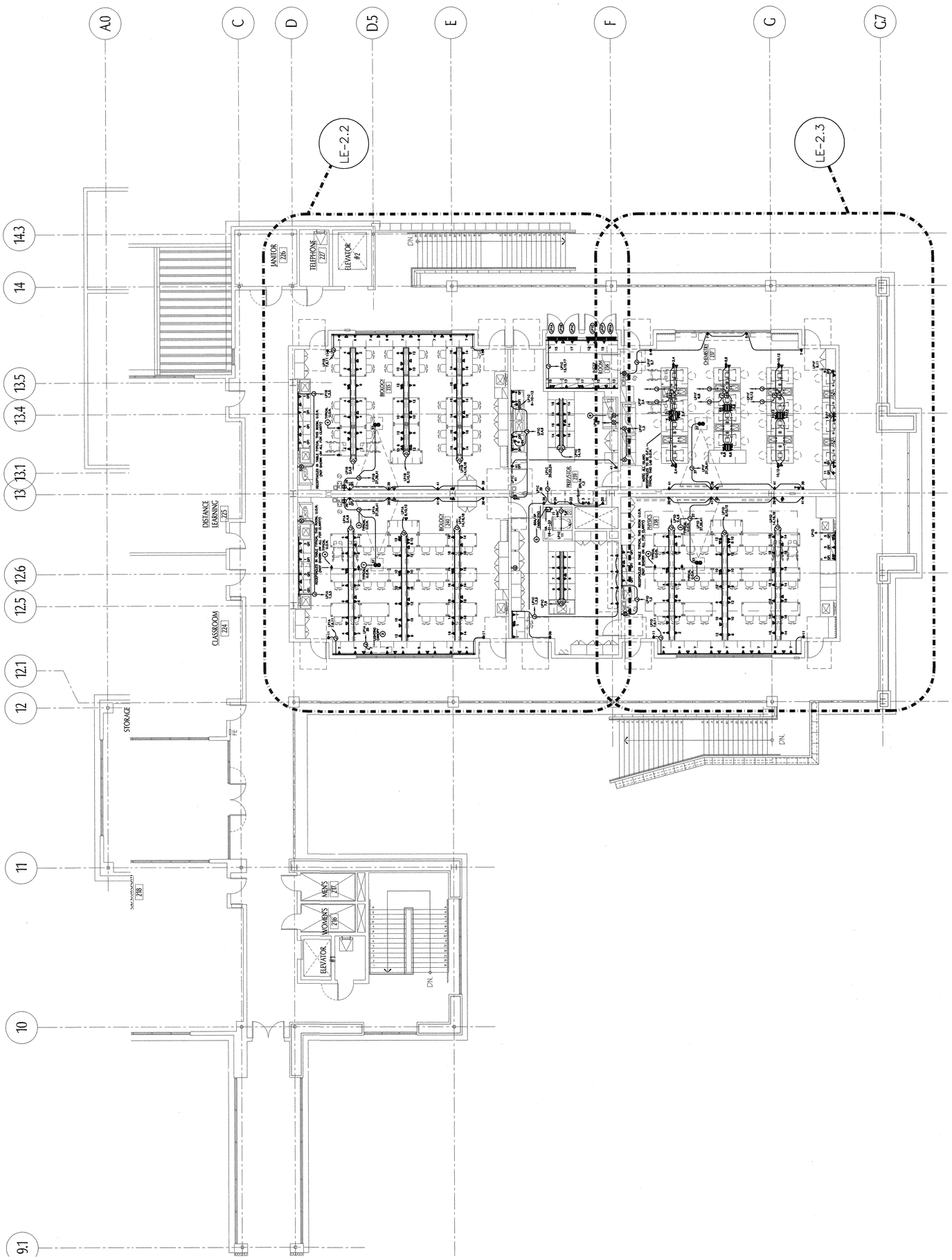

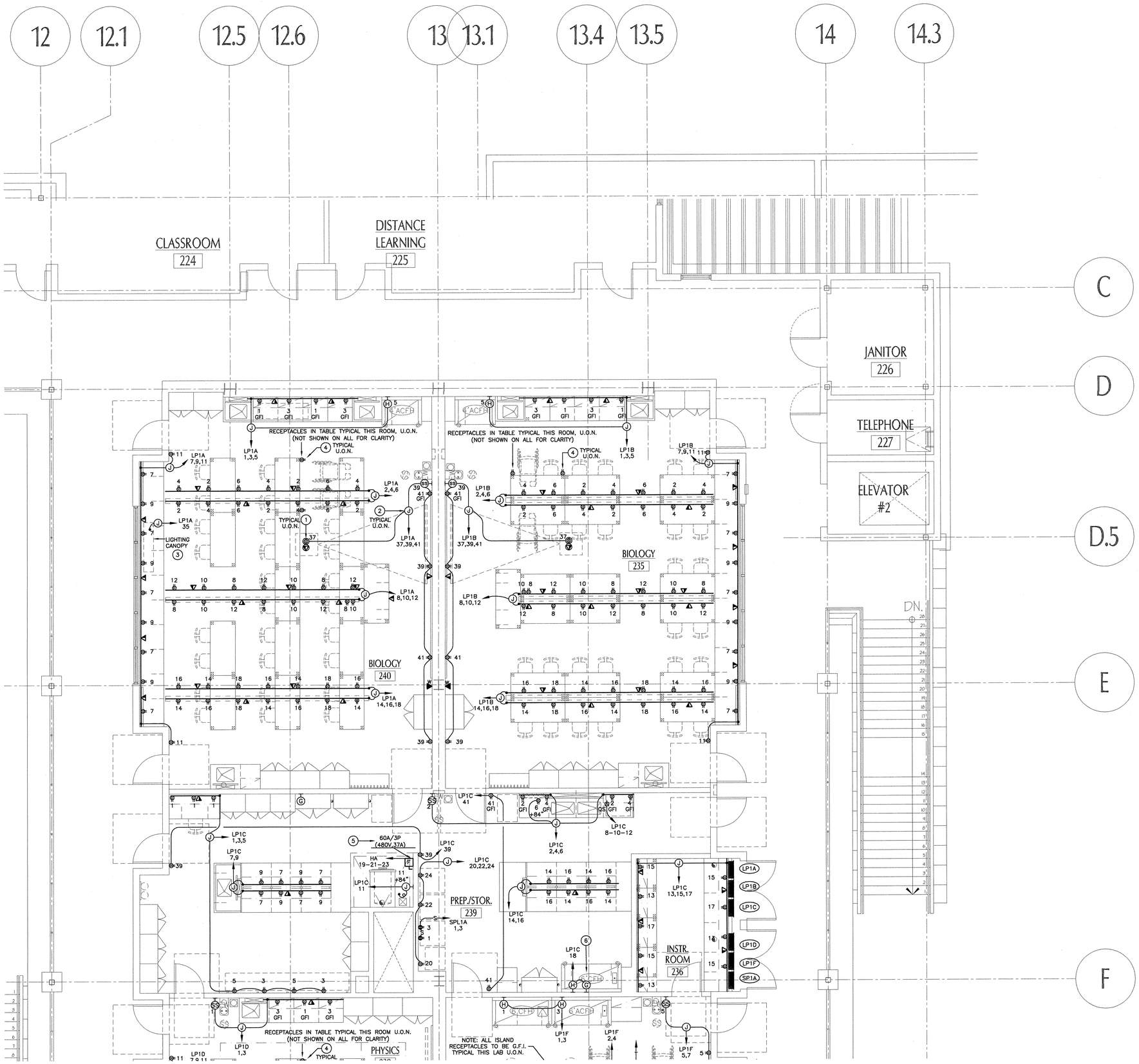

tBP
architecture
planning
interiors
management

tBP/Architecture
1000 Burnett Ave, Suite 140
Concord, CA 94520
ph: 925.246.6419 fx: 925.246.6495

architect

SEMENZA ENGINEERING
Consulting Electrical Engineers

consultant

agency

SAN RAMON VALLEY CENTER

CONTRA COSTA COMMUNITY COLLEGE DISTRICT

SAN RAMON, CALIFORNIA

owner

tBP project number : 20212.00

file name:

drawn by: MJL checked by: RAS

date: 03-04-04 plot scale: 1:1

Rev:	date:	description:

drawing title: building no.:

SAN RAMON VALLEY CENTER

drawing no.:

LE-2.2

drawing of

213

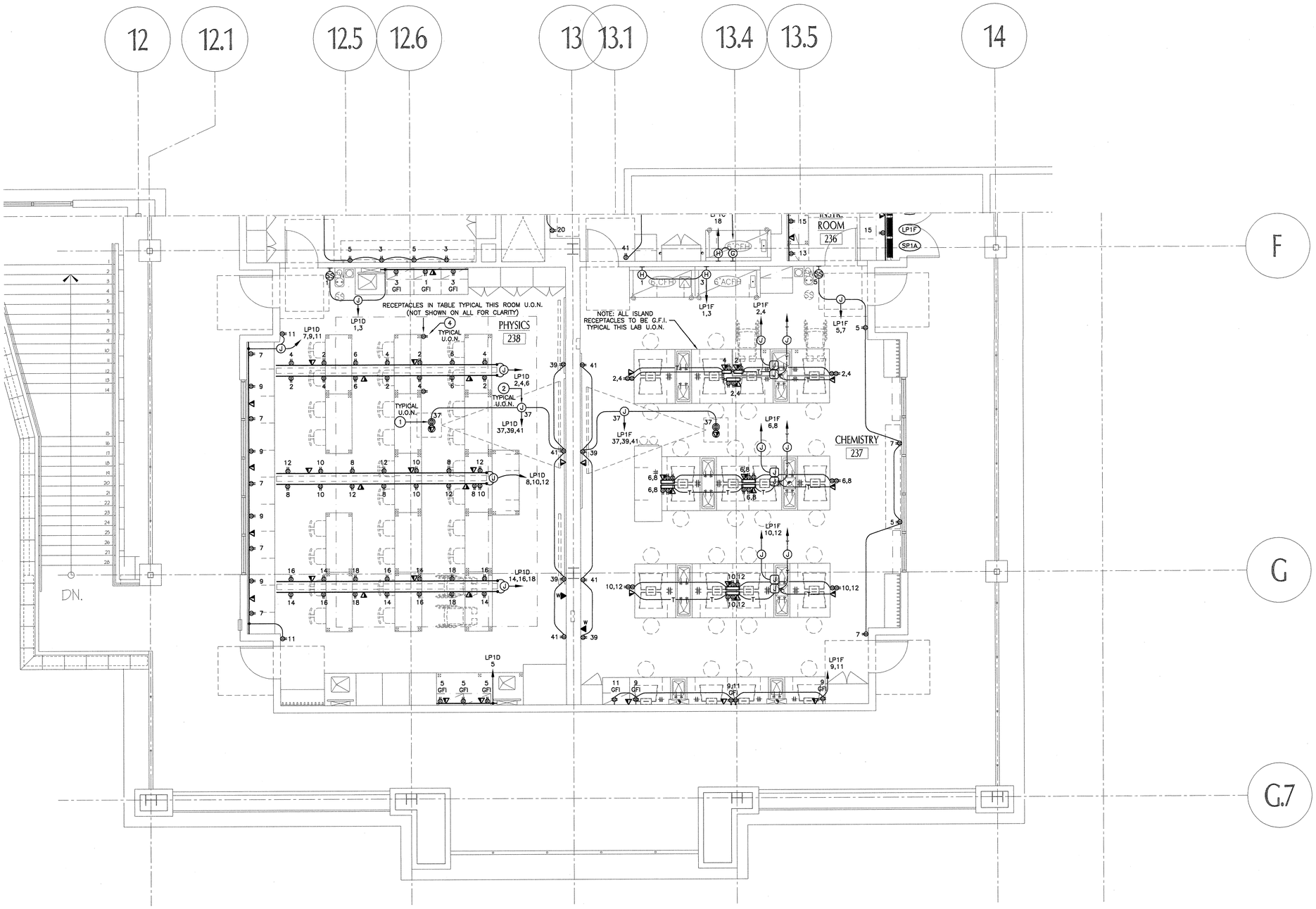

tBP
architecture
planning
interiors
management

tBP/Architecture
1000 Burnett Ave, Suite 140
Concord, CA 94520
ph: 925.246.6419 fx: 925.246.6495

architect

SEMENZA ENGINEERING
Civil Engineering • Surveying • Land Planning
1514 Diamond Blvd., Suite C, Concord, CA 94520
Tel.: (925) 825-3344 Fax: (925) 825-3345

consultant

IDENTIFICATION STAMP
DIV. OF THE STATE ARCHITECT
OFFICE OF REGULATION SERVICES
APPL. NO. 14-3779
BY: [illegible]
DATE: 3/15/04

agency

SAN RAMON VALLEY CENTER

CONTRA COSTA COMMUNITY COLLEGE DISTRICT

SAN RAMON, CALIFORNIA

owner

tBP project number : 20212.00
file name:
drawn by: MJL checked by: RAS
date: 03-04-04 plot scale: 1:1

Rev:	date:	description:

drawing title: building no.:
SAN RAMON VALLEY CENTER

drawing no.:
LE-2.3
drawing of

PLOTTED BY: OWNER DATE: 04 MAR 2004 TIME: 16:09 FILENAME: 231-LE2.3.DWG
Initial Setup, 2002-12-20; 35 % C.D. 2003-02-14; 90 % C.D. 2003-06-22; 100% C.D. 2003-08-19; Final 100% CD, DSA approved 2004-03-05
[© ARCHITECTS DESIGNED DRAWING PART 170.02]

214

PANEL: LP1A | VOLTAGE: 208/120 V, 3φ 4W | BUS SIZE: 225A | MAIN: 225A MCB
LOC: SEE PLANS | MOUNTING: FLUSH | AIC RATING: 10,000 | FEED: TOP [X] BOTTOM [ ]
CIRCUIT CODE: blank or N : NON-CONTINUOUS | L : LONG-CONTINUOUS | R : N.E.C Art 220-3 RECEPT | K : KITCHEN

ITEM	CODE	BKR	#	φ A	φ B	φ C	#	BKR	CODE	ITEM
REC. – RACEWAY RM 229		20/1	1	360 900			2	20/1		REC. RACEWAY–OHSC RM 229
REC. – RACEWAY RM 229		20/1	3		360 900		4	20/1		REC. RACEWAY–OHSC RM 229
FUME HOOD RM 229		20/1	5			1000 720	6	20/1		REC. RACEWAY–OHSC RM 229
REC. – RACEWAY RM 229		20/1	7	900 900			8	20/1		REC. RACEWAY–OHSC RM 229
REC. – RACEWAY RM 229		20/1	9		720 900		10	20/1		REC. RACEWAY–OHSC RM 229
REC. – WALL RM 229	R	20/1	11			360 900	12	20/1		REC. RACEWAY–OHSC RM 229
SPARE –		20/1	13	X 900			14	20/1		REC. RACEWAY–OHSC RM 229
SPARE –		20/1	15		X 900		16	20/1		REC. RACEWAY–OHSC RM 229
SPARE –		20/1	17			X 720	18	20/1		REC. RACEWAY–OHSC RM 229
SPARE –		20/1	19	X X			20			SPACE –
SPARE –		20/1	21		X X		22			SPACE –
SPARE –		20/1	23			X X	24			SPACE –
SPARE –		20/1	25	X X			26			SPACE –
SPARE –		20/1	27		X X		28			SPACE –
SPARE –		20/1	29			X X	30			SPACE –
SPARE –		20/1	31	X X			32			SPACE –
SPARE –		20/1	33		X X		34			SPACE –
LIGHTING CANOPY RM 229		20/1	35			500 X	36			SPACE –
VIDEO PROJECTOR RM 229		20/1	37	600 X			38			SPACE –
REC. – CONV./EYE WASH RM 229		20/1	39		540 X		40			SPACE –
REC. – CONV. RM 229	R	20/1	41			360 X	42			SPACE –

CONN. VA φ A	4560	CONN. VA (CODE N)	12720	PANEL DEMAND KVA	13.4
CONN. VA φ B	4320	CONN. VA (CODE L)	0	PANEL DEMAND AMPS	37.3
CONN. VA φ C	4560	CONN. VA (CODE R)	720	PANEL CONN. AMPS	37.3
TOTAL CONNECTED VA	13440	CONN. VA (CODE K)	0	HIGH φ AMPS W/LCL	38.0

PANEL: LP1B | VOLTAGE: 208/120 V, 3φ 4W | BUS SIZE: 225A | MAIN: 225A MCB
LOC: SEE PLANS | MOUNTING: FLUSH | AIC RATING: 10,000 | FEED: TOP [X] BOTTOM [ ]
CIRCUIT CODE: blank or N : NON-CONTINUOUS | L : LONG-CONTINUOUS | R : N.E.C Art 220-3 RECEPT | K : KITCHEN

ITEM	CODE	BKR	#	φ A	φ B	φ C	#	BKR	CODE	ITEM
REC. – RACEWAY RM 235		20/1	1	360 900			2	20/1		REC. RACEWAY–OHSC RM 235
REC. – RACEWAY RM 235		20/1	3		360 900		4	20/1		REC. RACEWAY–OHSC RM 235
FUME HOOD RM 235		20/1	5			1000 720	6	20/1		REC. RACEWAY–OHSC RM 235
REC. – RACEWAY RM 235		20/1	7	900 900			8	20/1		REC. RACEWAY–OHSC RM 235
REC. – RACEWAY RM 235		20/1	9		720 900		10	20/1		REC. RACEWAY–OHSC RM 235
REC. – WALL RM 235	R	20/1	11			360 900	12	20/1		REC. RACEWAY–OHSC RM 235
SPARE –		20/1	13	X 900			14	20/1		REC. RACEWAY–OHSC RM 235
SPARE –		20/1	15		X 900		16	20/1		REC. RACEWAY–OHSC RM 235
SPARE –		20/1	17			X 720	18	20/1		REC. RACEWAY–OHSC RM 235
SPARE –		20/1	19	X X			20			SPACE –
SPARE –		20/1	21		X X		22			SPACE –
SPARE –		20/1	23			X X	24			SPACE –
SPARE –		20/1	25	X X			26			SPACE –
SPARE –		20/1	27		X X		28			SPACE –
SPARE –		20/1	29			X X	30			SPACE –
SPARE –		20/1	31	X X			32			SPACE –
SPARE –		20/1	33		X X		34			SPACE –
SPARE –		20/1	35			X X	36			SPACE –
VIDEO PROJECTOR RM 235		20/1	37	600 X			38			SPACE –
REC. – CONV./EYE WASH RM 235		20/1	39		540 X		40			SPACE –
REC. – CONV. RM 235	R	20/1	41			360 X	42			SPACE –

CONN. VA φ A	4560	CONN. VA (CODE N)	12220	PANEL DEMAND KVA	12.9
CONN. VA φ B	4320	CONN. VA (CODE L)	0	PANEL DEMAND AMPS	35.9
CONN. VA φ C	4060	CONN. VA (CODE R)	720	PANEL CONN. AMPS	35.9
TOTAL CONNECTED VA	12940	CONN. VA (CODE K)	0	HIGH φ AMPS W/LCL	38.0

PANEL: LP1C | VOLTAGE: 208/120 V, 3φ 4W | BUS SIZE: 225A | MAIN: 225A MCB
LOC: SEE PLANS | MOUNTING: FLUSH | AIC RATING: 'E' DWGS. | FEED: TOP [X] BOTTOM [ ]
CIRCUIT CODE: blank or N : NON-CONTINUOUS | L : LONG-CONTINUOUS | R : N.E.C Art 220-3 RECEPT | K : KITCHEN

ITEM	CODE	BKR	#	φ A	φ B	φ C	#	BKR	CODE	ITEM
REC. – RACEWAY RM 232		20/1	1	540 540			2	20/1		REC.–RCWY/EYE WASH RM 232
REC. – WALL RM 232	R	20/1	3		360 360		4	20/1		REC. RACEWAY – RM 232
REC. – WALL RM 232	R	20/1	5			360 1000	6	20/1		WATER PURIFIER RM 232
REC. – RACEWAY RM 232		20/1	7	720 2080			8	20/1		GLASS WASHER RM 232
REC. – RACEWAY RM 232		20/1	9		720 2080		10	20/1		X –
AUTOCLAVE CONTROLS RM 232		20/1	11			1200 2080	12	3		X –
REC. – RACEWAY RM 232A		20/1	13	540 720			14	20/1		REC. – RACEWAY RM 232
REC. – RACEWAY RM 232A		20/1	15		720 720		16	20/1		REC. – RACEWAY RM 232
REC. – RACEWAY RM 232A		20/1	17			360 1000	18	20/1		FUME HOOD RM 232
SPARE –		20/1	19	X 1800			20	20/1		ICE MACHINE RM 232
SPARE –		20/1	21		X 1200		22	20/1		REC. – REFRIG. RM 232
SPARE –		20/1	23			X 1200	24	20/1		REC. – REFRIG. RM 232
SPARE –		20/1	25	X X			26			SPACE –
SPARE –		20/1	27		X X		28			SPACE –
SPARE –		20/1	29			X X	30			SPACE –
SPARE –		20/1	31	X X			32			SPACE –
SPARE –		20/1	33		X X		34			SPACE –
SPARE –		20/1	35			X X	36			SPACE –
SPARE –		20/1	37	X X			38			SPACE –
REC. – CONV. RM 232	R	20/1	39		360 X		40			SPACE –
REC. – CONV. RM 232	R	20/1	41			360 X	42			SPACE –

CONN. VA φ A	6940	CONN. VA (CODE N)	19580	PANEL DEMAND KVA	21.0
CONN. VA φ B	6520	CONN. VA (CODE L)	0	PANEL DEMAND AMPS	58.4
CONN. VA φ C	7560	CONN. VA (CODE R)	1440	PANEL CONN. AMPS	58.4
TOTAL CONNECTED VA	21020	CONN. VA (CODE K)	0	HIGH φ AMPS W/LCL	63.0

PANEL: LP1D | VOLTAGE: 208/120 V, 3φ 4W | BUS SIZE: 225A | MAIN: 225A MCB
LOC: SEE PLANS | MOUNTING: FLUSH | AIC RATING: 10,000 | FEED: TOP [X] BOTTOM [ ]
CIRCUIT CODE: blank or N : NON-CONTINUOUS | L : LONG-CONTINUOUS | R : N.E.C Art 220-3 RECEPT | K : KITCHEN

ITEM	CODE	BKR	#	φ A	φ B	φ C	#	BKR	CODE	ITEM
REC.–RCWY/EYE WASH RM 234		20/1	1	360 900			2	20/1		REC. RACEWAY–OHSC RM 234
REC. – RACEWAY RM 234		20/1	3		360 900		4	20/1		REC. RACEWAY–OHSC RM 234
REC. – RACEWAY RM 234		20/1	5			540 720	6	20/1		REC. RACEWAY–OHSC RM 234
REC. – RACEWAY RM 234		20/1	7	900 900			8	20/1		REC. RACEWAY–OHSC RM 234
REC. – RACEWAY RM 234		20/1	9		720 900		10	20/1		REC. RACEWAY–OHSC RM 234
REC. – WALL RM 234	R	20/1	11			360 900	12	20/1		REC. RACEWAY–OHSC RM 234
SPARE –		20/1	13	X 900			14	20/1		REC. RACEWAY–OHSC RM 234
SPARE –		20/1	15		X 900		16	20/1		REC. RACEWAY–OHSC RM 234
SPARE –		20/1	17			X 720	18	20/1		REC. RACEWAY–OHSC RM 234
SPARE –		20/1	19	X X			20			SPACE –
SPARE –		20/1	21		X X		22			SPACE –
SPARE –		20/1	23			X X	24			SPACE –
SPARE –		20/1	25	X X			26			SPACE –
SPARE –		20/1	27		X X		28			SPACE –
SPARE –		20/1	29			X X	30			SPACE –
SPARE –		20/1	31	X X			32			SPACE –
SPARE –		20/1	33		X X		34			SPACE –
SPARE –		20/1	35			X X	36			SPACE –
VIDEO PROJECTOR RM 234		20/1	37	600 X			38			SPACE –
REC. – CONV. RM 234		20/1	39		360 X		40			SPACE –
REC. – CONV. RM 234	R	20/1	41			360 X	42			SPACE –

CONN. VA φ A	4560	CONN. VA (CODE N)	11580	PANEL DEMAND KVA	12.3
CONN. VA φ B	4140	CONN. VA (CODE L)	0	PANEL DEMAND AMPS	34.1
CONN. VA φ C	3600	CONN. VA (CODE R)	720	PANEL CONN. AMPS	34.1
TOTAL CONNECTED VA	12300	CONN. VA (CODE K)	0	HIGH φ AMPS W/LCL	38.0

PANEL: LP1F | VOLTAGE: 208/120 V, 3φ 4W | BUS SIZE: 225A | MAIN: 225A MCB
LOC: SEE PLANS | MOUNTING: FLUSH | AIC RATING: 10,000 | FEED: TOP [X] BOTTOM [ ]
CIRCUIT CODE: blank or N : NON-CONTINUOUS | L : LONG-CONTINUOUS | R : N.E.C Art 220-3 RECEPT | K : KITCHEN

ITEM	CODE	BKR	#	φ A	φ B	φ C	#	BKR	CODE	ITEM
FUME HOOD RM 234		20/1	1	1000 720			2	20/1		REC. – PEDESTAL RM 234
FUME HOOD RM 234		20/1	3		1000 720		4	20/1		REC. – PEDESTAL RM 234
REC.–WALL/EYE WASH RM 234		20/1	5			540 900	6	20/1		REC. – PEDESTAL RM 234
REC. – WALL RM 234	R	20/1	7	360 900			8	20/1		REC. – PEDESTAL RM 234
REC. – COUNTERTOP RM 234		20/1	9		540 720		10	20/1		REC. – PEDESTAL RM 234
REC. – COUNTERTOP RM 234		20/1	11			360 720	12	20/1		REC. – PEDESTAL RM 234
SPARE –		20/1	13	X X			14	20/1		SPARE X
SPARE –		20/1	15		X X		16	20/1		SPARE X
SPARE –		20/1	17			X X	18	20/1		SPARE X
SPARE –		20/1	19	X X			20			SPACE –
SPARE –		20/1	21		X X		22			SPACE –
SPARE –		20/1	23			X X	24			SPACE –
SPARE –		20/1	25	X X			26			SPACE –
SPARE –		20/1	27		X X		28			SPACE –
SPARE –		20/1	29			X X	30			SPACE –
SPARE –		20/1	31	X X			32			SPACE –
SPARE –		20/1	33		X X		34			SPACE –
SPARE –		20/1	35			X X	36			SPACE –
VIDEO PROJECTOR RM 234		20/1	37	600 X			38			SPACE –
REC. – CONV. RM 234	R	20/1	39		360 X		40			SPACE –
REC. – CONV. RM 234	R	20/1	41			360 X	42			SPACE –

CONN. VA φ A	3580	CONN. VA (CODE N)	8720	PANEL DEMAND KVA	9.8
CONN. VA φ B	3340	CONN. VA (CODE L)	0	PANEL DEMAND AMPS	27.2
CONN. VA φ C	2880	CONN. VA (CODE R)	1080	PANEL CONN. AMPS	27.2
TOTAL CONNECTED VA	9800	CONN. VA (CODE K)	0	HIGH φ AMPS W/LCL	29.8

PANEL: SLP1A | VOLTAGE: 208/120 V, 3φ 4W | BUS SIZE: 225A | MAIN: 225A MCB
LOC: SEE PLANS | MOUNTING: FLUSH | AIC RATING: 'E' DWGS. | FEED: TOP [X] BOTTOM [ ]
CIRCUIT CODE: blank or N : NON-CONTINUOUS | L : LONG-CONTINUOUS | R : N.E.C Art 220-3 RECEPT | K : KITCHEN

ITEM	CODE	BKR	#	φ A	φ B	φ C	#	BKR	CODE	ITEM
EQ. REC. – INCUBATOR RM 232		20/1	1	1800 X			2			SPACE –
EQ. REC. – INCUBATOR RM 232		20/1	3		1800 X		4			SPACE –
SPARE –		20/1	5			X X	6			SPACE –
SPARE –		20/1	7	X X			8			SPACE –
SPARE –		20/1	9		X X		10			SPACE –
SPARE –		20/1	11			X X	12			SPACE –
SPARE –		20/1	13	X X			14			SPACE –
SPARE –		20/1	15		X X		16			SPACE –
SPARE –		20/1	17			X X	18			SPACE –
SPARE –		20/1	19	X X			20			SPACE –
SPARE –		20/1	21		X X		22			SPACE –
SPARE –		20/1	23			X X	24			SPACE –
SPARE –		20/1	25	X X			26			SPACE –
SPARE –		20/1	27		X X		28			SPACE –
SPARE –		20/1	29			X X	30			SPACE –
SPARE –		20/1	31	X X			32			SPACE –
SPARE –		20/1	33		X X		34			SPACE –
SPARE –		20/1	35			X X	36			SPACE –
SPARE –		20/1	37	X X			38			SPACE –
SPARE –		20/1	39		X X		40			SPACE –
SPARE –		20/1	41			X X	42			SPACE –

CONN. VA φ A	1800	CONN. VA (CODE N)	3600	PANEL DEMAND KVA	3.6
CONN. VA φ B	1800	CONN. VA (CODE L)	0	PANEL DEMAND AMPS	10.0
CONN. VA φ C	0	CONN. VA (CODE R)	0	PANEL CONN. AMPS	10.0
TOTAL CONNECTED VA	3600	CONN. VA (CODE K)	0	HIGH φ AMPS W/LCL	15.0

LP1A | LP1B | LP1C | LP1D

LP1F | SLP1A

PLOTTED BY: OWNER DATE: 05 MAR 2004 TIME: 10:23 FILENAME: 231-LE3.0.DWG
Initial Setup, 2002-12-20; 35 # C.O. 2003-02-14; 90 # C.O. 2003-06-22; 100# C.O. 2003-08-19; Final 100# CD, IOR approved 2004-03-05
(Revised/approved sheet only)

25

tBP
architecture
planning
interiors
management

tBP/Architecture
1000 Burnett Ave, Suite 140
Concord, CA 94520
ph: 925.246.6419 fx: 925.246.6495

architect

REGISTERED PROFESSIONAL ENGINEER
RENATO A. SEMENZA
NO. E10897
EXP. 12-31-06
STATE OF CALIFORNIA

SEMENZA ENGINEERING
CONSULTING ELECTRICAL ENGINEERS
1134 Gravenstein Hwy. North, Suite 41
Sebastopol, CA 95472
TEL: (707) 824-0551 FAX: (707) 824-0554

consultant

IDENTIFICATION STAMP
DIV. OF THE STATE ARCHITECT
OFFICE OF REGULATION SERVICES
APPL. No. 02-105719
BY: [signature]
DATE: 4/5/04

agency

SAN RAMON VALLEY CENTER
CONTRA COSTA COMMUNITY COLLEGE DISTRICT
SAN RAMON, CALIFORNIA

owner

tBP project number : 20212.00
file name:
drawn by: MJL checked by: RAS
date: 03-09-04 plot scale: 1:1

Rev:	date:	description:

drawing title: building no.:
SAN RAMON VALLEY CENTER
drawing no.:
LE-3.0
drawing of

LEGEND OF SYMBOLS TELECOMMUNICATIONS BOXES

SYMBOLS	DESCRIPTIONS
FRONT	19" x 84" STEEL RACK WITH CABLE MANAGEMENT AND AC POWER DISTRIBUTION.
	EQUIPMENT CABINET
	20 X 4 X 1/4 INCH COPPER GROUND BAR, PREDRILLED
	POWER DISTRIBUTION UNIT (PDU) MOUNTED IN THE REAR OF THE VERTICAL CABLE MANAGER ON EACH SIDE OF THE EQUIPMENT RACKS.
OR GND	DIRECT CONNECTION TO TELECOM GROUNDING BAR REQUIRED. SEE SPECIFICATION SECTION 16803 AND GROUNDING DIAGRAMS.
#	KEY NOTE INDICATOR. SEE CORRESPONDING SHEET NOTE ON SAME SHEET.
#	DETAIL KEY NOTE INDICATOR. SEE CORRESPONDING DETAIL NOTE ON SAME DETAIL.
	TELECOM BACKBOARDS 3/4" PLYWOOD A-C GRADE FIRE RESISTANT TREATED PLYWOOD. PLYWOOD SHALL HAVE STAMP THAT INDICATES TREATED FIRE RESISTANCE MASK STAMP AND PAINT PLYWOOD WITH A LOW SMOKE SEMI-GLOSS WHITE PAINT.
# T#.##	DETAIL INDICATOR/LOCATOR. SEE ASSOCIATED DETAIL. UPPER # INDICATES DETAIL NUMBER. LOWER # INDICATES SHEET. "__" IN UPPER HALF INDICATES MULTIPLE DETAILS FROM INDICATED SHEET APPLY. "__" IN LOWER HALF INDICATES DETAIL IS ON SAME SHEET AS INDICATOR.
# T#.##	ELEVATION INDICATOR/LOCATOR. SEE ASSOCIATED ELEVATION. UPPER # INDICATES DETAIL NUMBER. LOWER # INDICATES SHEET. "__" IN UPPER HALF INDICATES MULTIPLE DETAILS FROM INDICATED SHEET APPLY. "__" IN LOWER HALF INDICATES DETAIL IS ON SAME SHEET AS INDICATOR.
# T#.##	SECTION INDICATOR/LOCATOR. SEE ASSOCIATED SECTION. UPPER # INDICATES DETAIL NUMBER. LOWER # INDICATES SHEET. "__" IN UPPER HALF INDICATES MULTIPLE DETAILS FROM INDICATED SHEET APPLY. "__" IN LOWER HALF INDICATES DETAIL IS ON SAME SHEET AS INDICATOR.
	RISER CONDUITS UP
	RISER CONDUITS DOWN
	RISER CONDUITS THROUGH
	ROUTE CONDUIT TO CABLETRAY
#	FIBER OPTIC SERVICE LOOP, # INDICATES LOOP LENGTH IN FEET.
ZL	FIBER OPTIC CABLE
ZL	FIBER OPTIC SPLICE

TELECOM TERMINATION DEVICE IDENTIFIER LEGEND

SYMBOLS

FIBER TERMINATION SHELF LEGEND

ROOM: ROOM	ROOM IDENTIFIER
RACK: RACK	RACK IDENTIFIER
SHELF: SHELF	SHELF IDENTIFIER
POS POS	QTY. OF AVAILABLE SHELF POSITIONS
MM MM	QTY. OF MULTIMODE FIBER TERMINATED
SM SM	QTY. OF SINGLE MODE FIBER TERMINATED
SPARE SPARE	QTY. OF SPARE TERMINATIONS

COMMUNICATIONS OUTLETS

OUTLET NAMING CONVENTION

OUTLET DIAGRAM BREAKDOWN

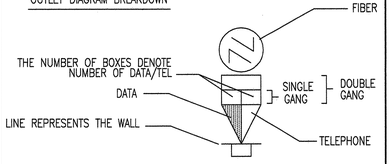

OUTLET NUMBERING CONVENTION

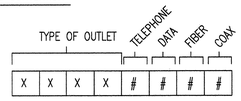

EXAMPLE: WALL BOX FLUSH DOUBLE GANG

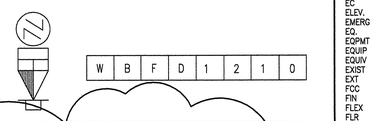

SYMBOLS	DESCRIPTIONS
A WBFD2400 IDF# ROOM# #	WALL BOX FLUSH DOUBLE GANG TERMINATION HARDWARE: (2) 4-PAIR TELEPHONE STATION CABLE (2) 8 PIN 8 POSITION TELEPHONE JACK (4) 4-PAIR NETWORK STATION CABLES (4) 8 PIN 8 POSITION NETWORK JACKS
B WBFD1400 IDF# ROOM# #	WALL BOX FLUSH DOUBLE GANG TERMINATION HARDWARE: (1) 4-PAIR TELEPHONE STATION CABLE (1) 8 PIN 8 POSITION TELEPHONE JACK (4) 4-PAIR NETWORK STATION CABLES (4) 8 PIN 8 POSITION NETWORK JACKS
A WBFD1200 IDF# ROOM# #	WALL BOX FLUSH DOUBLE GANG TERMINATION HARDWARE: (1) 4-PAIR TELEPHONE STATION CABLE (1) 8 PIN 8 POSITION TELEPHONE JACK (4) 4-PAIR NETWORK STATION CABLES (2) 8 PIN 8 POSITION NETWORK JACKS
A WBFD0800 IDF# ROOM# #	WALL BOX FLUSH DOUBLE GANG TERMINATION HARDWARE: (8) 4-PAIR NETWORK STATION CABLES (8) 8 PIN 8 POSITION NETWORK JACKS
A WBFD0400 IDF# ROOM# #	WALL BOX FLUSH DOUBLE GANG TERMINATION HARDWARE: (4) 4-PAIR NETWORK STATION CABLES (4) 8 PIN 8 POSITION NETWORK JACKS
A WBFD0200 IDF# ROOM# #	WALL BOX FLUSH DOUBLE GANG TERMINATION HARDWARE: (2) 4-PAIR NETWORK STATION CABLES (2) 8 PIN 8 POSITION NETWORK JACKS
A WAPS0100 IDF# ROOM# STA#	WIRELESS ACCESS POINT TERMINATION HARDWARE: (1) 4 PAIR NETWORK STATION CABLES (1) 8 PIN 8 POSITION NETWORK JACKS
A FBRT2400 IDF# ROOM# STA#	FLOOR BOX RECESSED TRIPLEX TERMINATION HARDWARE: (2) 4-PAIR TELEPHONE STATION CABLE (2) 8 PIN 8 POSITION TELEPHONE JACK (4) 4-PAIR NETWORK STATION CABLES (4) 8 PIN 8 POSITION NETWORK JACKS
A FBRT1500 IDF# ROOM# STA#	FLOOR BOX RECESSED TRIPLEX TERMINATION HARDWARE: (1) 4-PAIR TELEPHONE STATION CABLE (1) 8 PIN 8 POSITION TELEPHONE JACK (5) 4-PAIR NETWORK STATION CABLES (5) 8 PIN 8 POSITION NETWORK JACKS
A FBRT0800 IDF# ROOM# STA#	FLOOR BOX RECESSED TRIPLEX TERMINATION HARDWARE: (8) 4-PAIR NETWORK STATION CABLES (8) 8 PIN 8 POSITION NETWORK JACKS
A FBRT0600 IDF# ROOM# STA#	FLOOR BOX RECESSED TRIPLEX TERMINATION HARDWARE: (6) 4-PAIR NETWORK STATION CABLES (6) 8 PIN 8 POSITION NETWORK JACKS
A FBRD0400 IDF# ROOM# STA#	FLOOR BOX RECESSED DUPLEX TERMINATION HARDWARE: (4) 4-PAIR NETWORK STATION CABLES (4) 8 PIN 8 POSITION NETWORK JACKS
A FBRD2200 IDF# ROOM# STA#	TERMINATION HARDWARE: (2) 4-PAIR TELEPHONE STATION CABLE (2) 8 PIN 8 POSITION TELEPHONE JACK (2) 4-PAIR NETWORK STATION CABLES (2) 8 PIN 8 POSITION NETWORK JACKS
A FBRD1200 IDF# ROOM# STA#	FLOOR BOX RECESSED DUPLEX TERMINATION HARDWARE: (1) 4-PAIR TELEPHONE STATION CABLE (1) 8 PIN 8 POSITION TELEPHONE JACK (2) 4-PAIR NETWORK STATION CABLES (2) 8 PIN 8 POSITION NETWORK JACKS
A FBRT0400 IDF# ROOM# STA#	FLOOR BOX RECESSED TRIPLEX TERMINATION HARDWARE: (4) 4-PAIR NETWORK STATION CABLES (4) 8 PIN 8 POSITION NETWORK JACKS
A RALD0400 IDF# ROOM# #	RACEWAY ALUMINUM DUAL CHANNEL TERMINATION HARDWARE: (4) 4-PAIR NETWORK STATION CABLES (4) 8 PIN 8 POSITION NETWORK JACKS
A RALD0200 IDF# ROOM# #	RACEWAY ALUMINUM DUAL CHANNEL TERMINATION HARDWARE: (2) 4-PAIR NETWORK STATION CABLES (2) 8 PIN 8 POSITION NETWORK JACKS
A TBTF0200 IDF# ROOM# #	TABLE TOP FLUSH TERMINATION HARDWARE: (2) 4-PAIR NETWORK STATION CABLES (2) 8 PIN 8 POSITION NETWORK JACKS
A TBTS0200 IDF# ROOM# #	TABLE-TOP SURFACE MODULE TERMINATION HARDWARE: (2) 4-PAIR NETWORK STATION CABLES (2) 8 PIN 8 POSITION NETWORK JACKS

ABBREVIATIONS

ABBREVIATION / DESCRIPTION

(e) OR (E)	EXISTING
(n) OR (N)	NEW
(f) OR (F)	FUTURE
ABV	ABOVE
ACH	ABOVE COUNTER HEIGHT
ACT	ACOUSTICAL CEILING TILE
ADJ	ADJUST(ABLE)
AFC	ABOVE FINISHED CEILING
AFF	ABOVE FINISHED FLOOR
AFG	ABOVE FINISHED GRADE
ALT	ALTERNATE
ANSI	AMERICAN NATIONAL STANDARDS INSTITUTE
APPROX	APPROXIMATE
ARCH	ARCHITECT(URAL)
ASA	AMERICAN STANDARDS ASSOCIATION
BET	BETWEEN
BFC	BELOW FINISHED CEILING
BLDG	BUILDING
BLW	BELOW
C-C	CENTER TO CENTER
CL	CENTER LINE
CLG	CEILING
CLR	CLEAR(ANCE)
CMU	CONCRETE MASON UNIT
COL	COLUMN
CONC.	CONCRETE
CONT	CONTINUOUS
COORD	COORDINATE, COORDINATION
CORR	CORRIDOR
DED	DEDICATE, DEDICATED
DEMO	DEMOLISH
DEPT	DEPT DEPARTMENT
DET	DETAIL
DIM	DIMENSION
DIST	DISTANCE
DWG(S)	DRAWING(S)
EA	EACH
EC	ELECTRICAL CONTRACTOR
ELEV.	ELEVATION
EMERG	EMERGENCY
EQ.	EQUAL
EQPMT	EQUIPMENT
EQUIP	EQUIPMENT
EQUIV	EQUIVALENT
EXIST	EXISTING
EXT	EXTERIOR
FCC	FEDERAL COMMUNICATIONS COMMISSION
FIN	FINISH
FLEX	FLEXIBLE
FLR	FLOOR
FLUOR	FLUORESCENT
FUT	FUTURE
GA	GAUGE
GALV	GALVANIZED
	GENERAL CONTRACTOR
	GYPSUM WALL BOARD
INCAND	INCANDESCENT
	INCLUDE, INCLUDING
	INFORMATION
	INTERIOR
	MAXIMUM
	MECHANICAL
	MANUFACTURER
MIN	MINIMUM
MISC	MISCELLANEOUS
NA	NOT APPLICABLE
NEC	NATIONAL ELECTRICAL CODE
NEMA	NATIONAL ELECTRICAL MANUFACTURER'S ASSOCIATION
NFPA	NATIONAL FIRE PROTECTION ASSOCIATION
NIC	NOT IN CONTRACT
No.	NUMBER
NOM	NOMINAL
NTS	NOT TO SCALE
OC	ON CENTER
OFCI	OWNER FURNISHED CONTRACTOR INSTALLED
OFE	OWNER FURNISHED EQUIPMENT
OFOI	OWNER FURNISHED, OWNER INSTALLED
OPP	OPPOSITE
OSHA	OCCUPATIONAL SAFETY AND HEALTH ADMINISTRATION
OVHD	OVERHEAD
PAV	PAVEMENT
PLY	PLYWOOD
PLYWD	PLYWOOD
PRI	PRIMARY
PROP	PROPOSED
QTY	QUANTITY
RCP	REFLECTED CEILING PLAN
REF	REFERENCE
REM	REMOVE
REPL	REPLACE
REQ'D	REQUIRED
REQD	REQUIRED
RM	ROOM
SCHD	SCHEDULE
SECT.	SECTION
SHT	DRAWING SHEET NUMBER OR SERIES
SIM	SIMILAR
SPEC	SPECIFICATION
SQ	SQUARE
STD	STANDARD
STL	STEEL
SUSP	SUSPEND(ED)
SYM	SYMMETRICAL
SYST	SYSTEM
TELC	TELECOMMUNICATIONS CONTRACTOR
TEMP	TEMPORARY
THK	THICK(NESS)
TIA/EIA	TELECOMMUNICATIONS INDUSTRIES ASSOCIATION /ELECTRONIC INDUSTRY ALLIANCE
TME	TO MATCH EXISTING
TYP	TYPICAL
UBC	UNIFORM BUILDING CODE
UC	UNDERCOUNTER
UL	UNDERWRITERS LABORATORY
UON	UNLESS OTHERWISE NOTED
VIF	VERIFY IN FIELD
W/	WITH
W/O	WITHOUT
WD	WOOD
WO	WHERE OCCURS

WIRE & CABLE ABBREVIATIONS

ANMW	24 AWG BONDED FILL FLOODED TWISTED CABLE
ARMM	24 AWG RISER ARMORED BONDED MULTIPAIR CABLE
AWG	AMERICAN WIRE GAGE
CAT3	CATEGORY 3 TWISTED PAIR COPPER CABLE
CAT4	CATEGORY 4 TWISTED PAIR COPPER CABLE
CAT5	CATEGORY 5 TWISTED PAIR COPPER CABLE
CAT5E	CATEGORY 5 ENHANCED TWISTED PAIR CABLE
CM	NEC, COMMUNICATIONS CABLE
CMP	NEC, COMMUNICATIONS PLENUM CABLE
CMR	NEC, COMMUNICATIONS RISER CABLE
COAX	COAXIAL CABLE
FO	FIBER OPTIC
HDPE	HIGH DENSITY POLYETHYLENE
LTFF	LOOSE TUBE FILLED & FLOODED
MDPE	MEDIUM DENSITY POLYETHYLENE
MM	MULTIMODE FIBER OPTIC CABLE
MPP	NEC, MULTIPURPOSE PLENUM CABLE
OFC	NEC, OPTICAL FIBER CONDUCTIVE CABLE
OFCP	NEC, OPTICAL FIBER CONDUCTIVE PLENUM CABLE
OFCR	NEC, OPTICAL FIBER CONDUCTIVE RISER CABLE
OFNR	NEC, OPTICAL FIBER NON-CONDUCTIVE RISER CABLE
OFN	NEC, OPTICAL FIBER NON-CONDUCTIVE CABLE
OFNP	NEC, OPTICAL FIBER NON-CONDUCTIVE PLENUM CABLE
SM	SINGLE MODE FIBER OPTIC CABLE
STP	SHIELDED TWISTED PAIR
TB	TIGHT BUFFERED
UTP	UNSHIELDED TWISTED PAIR

ELECTRICAL ABBREVIATIONS

A OR AMP	AMPERE
BND	BOND(ING)
C	CONDUIT
C.O.	CONDUIT ONLY
COND.	CONDUIT
ELEC	ELECTRIC(AL)
EMT	ELECTRICAL METALLIC TUBING
ENT	ELECTRICAL NON-METALLIC TUBING
GRC	GALVANIZED RIGID CONDUIT
GRD	GROUND
GRND	GROUND
Hz	HERTZ
IG	ISOLATED GROUND
IMC	INTERMEDIATE METALLIC CONDUIT
PB	PULL BOX
PLN	PANEL
PWR	POWER
UPS	UNINTERRUPTABLE POWER SUPPLY
V	VOLT
VAC	VOLTS, ALTERNATING CURRENT
VDC	VOLTS, DIRECT CURRENT
W	WATT
XFMR	TRANSFORMER

MEASURMENTS ABBREVIATIONS

BTU	BRITISH THERMAL UNIT
D or Dp	DEEP
DIA	DIAMETER
FT	FOOT OR FEET
H or HGT	HEIGHT OR HIGH
ID	INSIDE DIAMETER
In	INCH
L	LENGTH OR LONG
Lb	POUND
LIN	LINEAR
M	METER
mm	MILIMETER
OD	OUTSIDE DIAMETER
R	RADIUS
RAD	RADIANS
um	MICRON
W	WIDE
WT	WEIGHT
YD	YARD

TELECOMMUNICATIONS ABBREVIATIONS

110	TWISTED PAIR TERMINATION BLOCK
ADF	AREA DISTRIBUTION FACILITY
BDF	BUILDING DISTRIBUTION FRAME OR FACILITY
BEF	BUILDING ENTRANCE FRAME OR FACILITY
CAB	TELECOM CABINET OR ENCLOSURE
CONN	CONNECTOR
CSC	COPPER SPLICE CLOSURE
CEV	CONTROLLED ENVIRONMENTAL VAULT
FDF	FIBER DISTRIBUTION FACILITY
FF	FRONT FACING
FS	FIBER SHELF/FIBER TERMINATION PANEL
FSC	FIBER OPTIC SPLICE CLOSURE
HH	HANDHOLE
IDF	INTERMEDIATE DISTRIBUTION FRAME OR FACILITY
MDF	MAIN DISTRIBUTION FRAME
MH	MANHOLE, MAINTENANCE HOLE
MPOE	MINIMUM POINT OF ENTRY, MAIN POINT OF ENTRY
OCEF	OPTICAL CABLE ENTRANCE FACILITY
PC	PLASTIC CONDUIT
PG	PAIR GROUP
POP	POINT OF PRESENCE
PR	PAIR
PVC	POLYVINYL CHLORIDE
R/W	RIGHT-OF-WAY
SC	SPLICE CLOSURE
SCS	STRUCTURED CABLING SYSTEM
SER	SERIAL
SMR	SURFACE MOUNTED RACEWAY
SS	FIBER SPLICE SHELF
TC	TELECOM CLOSET
TCC	TELECOM CONDUIT
TCH	TELECOM CONDUIT SLEEVE, HORIZONTAL
TCR	TELECOM HORIZONTAL & VERTICAL RISER CONDUIT
TCT	TELECOM CABLE TRAY
TEC	TELECOM ENTRANCE CONDUIT
TEL	TELEPHONE
TELECOM	TELECOMMUNICATIONS
TERM	TERMINAL
TP	TWISTED PAIR
TPB	TELECOM PULL BOX
TSL	TELECOM WALL OR FLOOR SLOT
TSV	TELECOM CONDUIT SLEEVE, VERTICAL

SYMBOLS AS ABBREVIATIONS

#	POUND
&	AND
@	AT
'	FOOT OR FEET
"	INCH OR INCHES
+/- OR ±	PLUS OR MINUS
<	LESS THAN
=	EQUAL
>	GREATER THAN
°	DEGREES, ANGULAR MEASURE
Ω	OHM
∥	PARALLEL
ø	DIAMETER
∠	ANGLE

NOTE

WHERE AN ABBREVIATION HAS MORE THAN ONE DESCRIPTION ABBREVIATIONS ARE CONTEXT SENSITIVE.

COLOR CODE

AQ	AQUA
BK	BLACK
BL	BLUE
BR	BROWN
G	GREEN
GR	GREY
OR	ORANGE
R	RED
RS	ROSE
SL	SLATE
V	VIOLET
W	WHITE
YL	YELLOW

DIRECTIONAL ABBREVIATIONS

DN	DOWN
E	EAST
HORIZ	HORIZONTAL
L	LEFT
LH	LEFT HAND
N	NORTH
PERP	PERPENDICULAR
R	RIGHT
RH	RIGHT HAND
S	SOUTH
VERT	VERTICAL
W	WEST

TELECOMMUNICATIONS DRAWING LIST

SHT.#	DESCRIPTION
T0.0.0	DRAWING INDEX, GENERAL NOTES, SITE PLAN, ABBREVIATIONS, LEGEND & SYMBOLS
T1.1.0	KEY PLAN FOR FIRST AND SECOND FLOOR PLANS
T2.1.1	TELECOM OUTLETS - FIRST FLOOR PLAN (WEST)
T2.1.2	TELECOM OUTLETS - FIRST FLOOR PLAN (EAST)
T2.2.1	TELECOM OUTLETS - SECOND FLOOR PLAN (WEST)
T2.2.2	TELECOM OUTLETS - SECOND FLOOR PLAN (EAST)
T3.1.1	FIRST FLOOR ENLARGED PLAN - IDF 105
T3.1.2	FIRST FLOOR ENLARGED PLAN - IDF 189
T3.1.3	FIRST FLOOR ENLARGED PLAN - MDF 180
T3.2.1	SECOND FLOOR ENLARGED PLAN - IDF 202
T3.2.2	SECOND FLOOR ENLARGED PLAN - IDF 233
T4.1.1	MDF ROOM 180 - ELEVATIONS
T4.2.1	IDF ROOMS - EQUIPMENT RACK ELEVATIONS
T4.3.1	IDF ROOMS - 110-BLOCK FIELD ELEVATIONS
T5.1.1	INTRA BUILDING BACKBONE CABLING DIAGRAM
T6.0.1	TELECOM OUTLET DETAILS
T6.0.2	TELECOM OUTLET DETAILS
T6.1.1	TELECOM CABLE TERMINATION & LABELING DETAILS
T6.2.1	TELECOM CABLE RUNWAY DETAILS
T6.3.1	TELECOM RACKS, CABINETS & DUAL CHANNEL SUPPORT DETAILS
T6.4.1	TELECOM GROUNDING AND FIRESTOPPING DETAILS
T10.2.1CP	CENTRAL UTILITY PLANT (CUP) BUILDING TELECOM OUTLETS & TELECOM ROOM ENLARGED PLAN.

GENERAL NOTES

1. PROVIDE SEISMIC DESIGN CALCULATIONS AND SEISMIC DESIGN DRAWINGS PREPARED BY THE CONTRACTOR'S CALIFORNIA CERTIFIED STRUCTURAL ENGINEER FOR COORDINATION AND APPROVAL BY THE OWNER'S REPRESENTATIVE PRIOR TO FABRICATING OR INSTALLING ANY SUPPORTS FOR TELECOM EQUIPMENT. ANY PROPOSED REINFORCEMENT TO BE THE RESPONSIBILITY OF THE CONTRACTOR.
2. COORDINATE SEISMIC SUPPORT DESIGN WITH ARCHITECTURAL, STRUCTURAL, MECHANICAL, ELECTRICAL, PLUMBING, FIRE PROTECTION, AND OTHER TRADES.
3. PRIOR TO BID, THE CONTRACTOR SHALL VISIT THE SITE TO ADEQUATELY DETERMINE ALL PRE-EXISTING CONDITIONS. BY THE ACT OF SUBMITTING A BID THE CONTRACTOR WILL BE DEEMED TO HAVE COMPLIED WITH THE FOREGOING TO HAVE ACCEPTED SUCH CONDITIONS AND TO HAVE MADE ALLOWANCES THEREFORE IN PREPARING THE BID.
4. ALL CONDUIT PENETRATIONS THROUGH FIRE-RATED WALLS AND FLOORS SHALL BE SEALED AND EQUIPPED WITH U.L LISTED PENETRATION ASSEMBLIES TO MAINTAIN FIRE SEPARATION RATING.
5. THE CONTRACTOR SHALL VERIFY ALL CRITICAL DIMENSIONS WITH THE ARCHITECTURAL DRAWINGS.
6. THE CONTRACTOR SHALL PROVIDE WRITTEN NOTICE OF FINAL COMPLETION OF THE TELECOM STRUCTURED CABLING INFRASTRUCTURE. UPON RECEIPT, THE OWNER'S REPRESENTATIVE WILL REVIEW/OBSERVE THE COMPLETED INSTALLATION AND MAY RANDOMLY REQUEST TESTS OF SPECIFIC COMPONENTS OF THE TELECOM STRUCTURED CABLING INFRASTRUCTURE. ONCE THE TESTING HAS BEEN COMPLETED AND THE OWNER'S REPRESENTATIVE IS SATISFIED THAT ALL WORK IS IN ACCORDANCE WITH THE CONTRACT DOCUMENTS, THE CONTRACTOR WILL BE NOTIFIED IN WRITING.

SITE PLAN

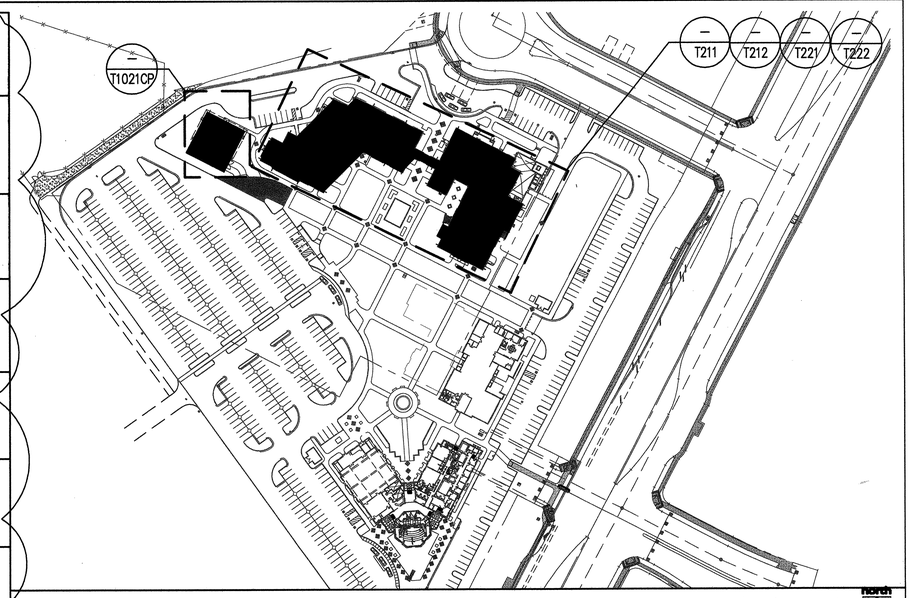

tBP
architecture
planning
interiors
management
tBP/Architecture
1000 Burnett Ave, Suite 140
Concord, CA 94520
ph: 9252466419 fx: 9252466495
architect
INFRASTRUCTURE DESIGN ASSOCIATES
1440 BROADWAY
SUITE 304 OAKLAND,
CA. 94612
PH: (510) 238-8000
FAX: (510) 238-8009
EXPIRES 12/31/04
Regis. No. 04166
consultant

APPROVED DSA/SS/CC DIVISION OF THE STATE ARCHITECT OFFICE OF REGULATION SERVICES
APPL NO. 105719
AC-NC FLS SS
DATE 6-24-04

agency

SAN RAMON VALLEY CENTER
CONTRA COSTA COMMUNITY COLLEGE DISTRICT
SAN RAMON, CALIFORNIA

owner

tBP project number : 20212.00
file name:
drawn by: IDA checked by:
date: 03-09-04 plot scale: 1:1

Rev:	date:	description:
1	05-26-04	Design Clarification

AS NOTED

drawing title: building no:
DRAWING INDEX, GENERAL NOTES,SITE PLAN, ABBREVIATIONS LEGEND & SYMBOLS

drawing no:
T0.0.0
drawing of

G:\San Ramon Valley Center\Bid Set\Acad\T000.dwg 5-27-04 11:25:42 AM cmendoza

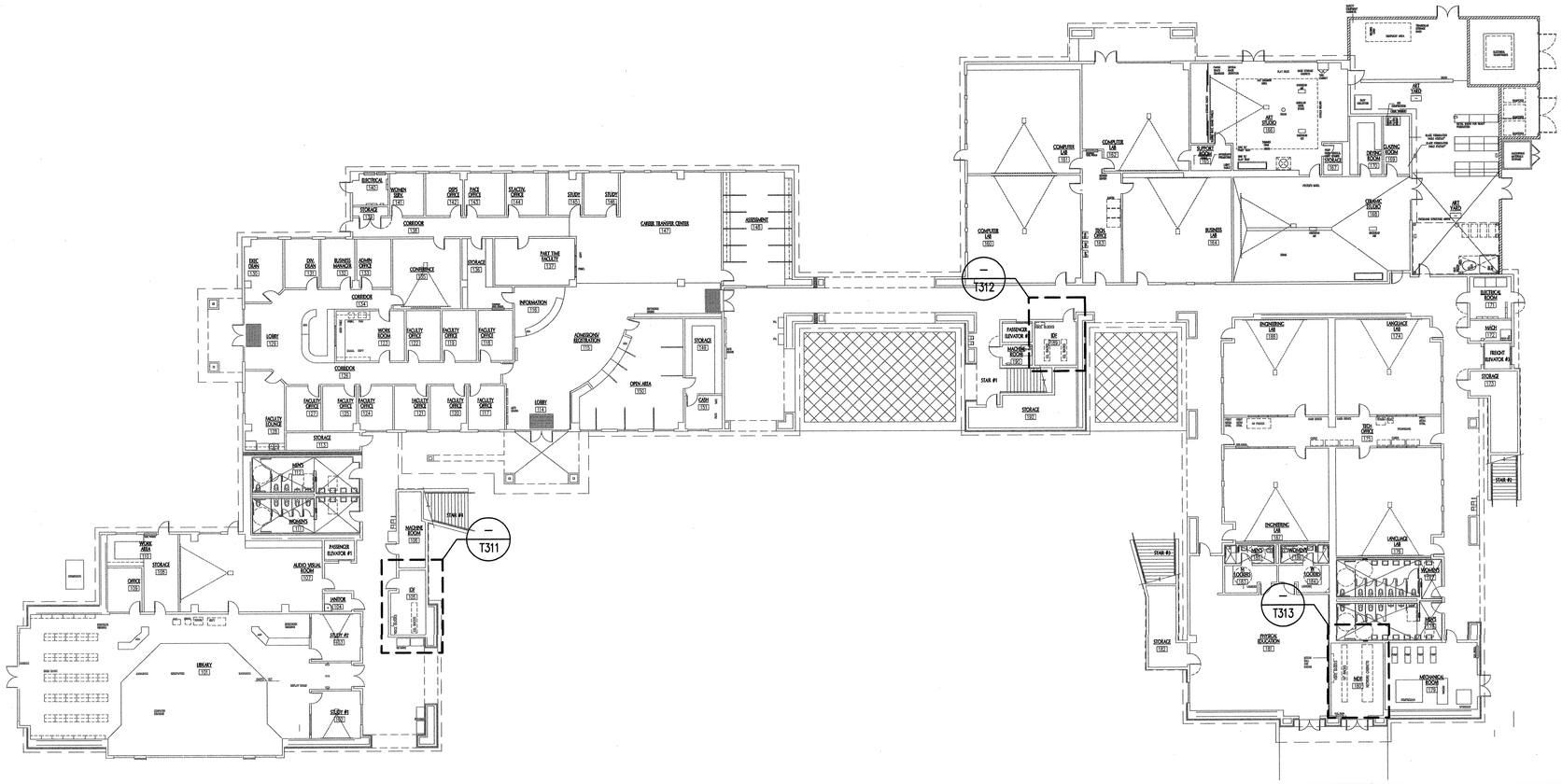

FIRST FLOOR PLAN - PATHWAYS | 1
SCALE: 1/16" = 1'-0"

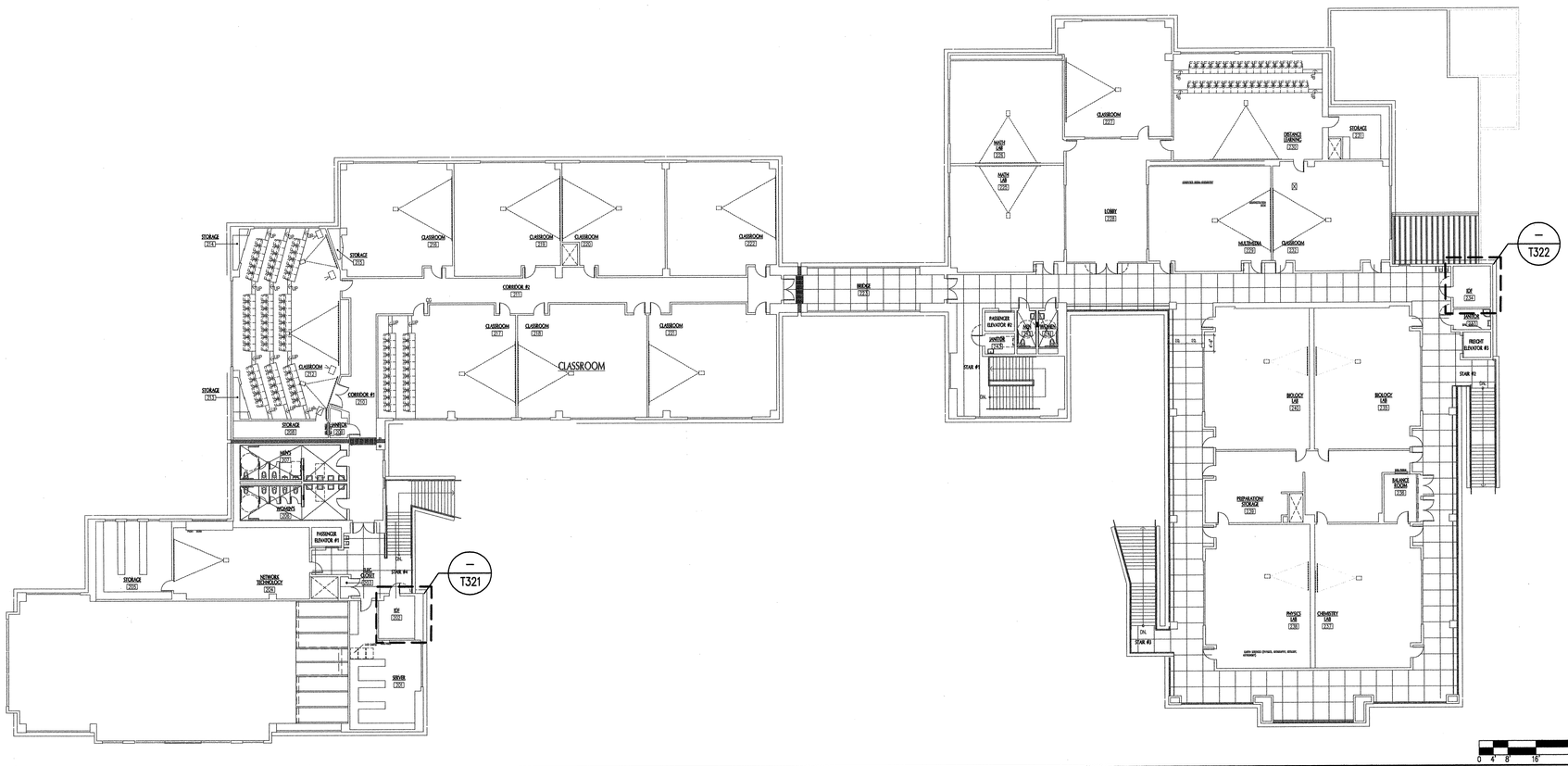

SECOND FLOOR PLAN - PATHWAYS | 2
SCALE: 1/16" = 1'-0"

KEY PLAN

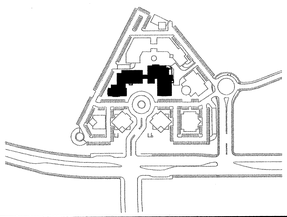

tBP — architecture planning interiors management

tBP/Architecture
1000 Burnett Ave, Suite 140
Concord, CA 94520
ph: 925.246.6419 fx: 925.246.6495

architect

INFRASTRUCTURE DESIGN ASSOCIATES
1440 BROADWAY
SUITE 304 OAKLAND,
CA. 94612
PH: (510) 238-8000
FAX: (510) 238-8009

EXPIRES 12/31/04
Regis. No. 04166

consultant

IDENTIFICATION STAMP
DIV. OF THE STATE ARCHITECT
OFFICE OF REGULATION SERVICES
APPL NO. 105719
AC. REG. 04-33
DATE

agency

SAN RAMON VALLEY CENTER
CONTRA COSTA COMMUNITY COLLEGE DISTRICT
SAN RAMON, CALIFORNIA

owner

tBP project number : 20212.00
file name:
drawn by: IDA checked by:
date: 03-09-04 plot scale: 1:1

Rev:	date:	description:

drawing title: KEY PLAN FOR FIRST AND SECOND PLANS
building no.:
drawing no.: T1.1.0
drawing of

G:\San Ramon Valley Center\DSA\Acad\T1110.dwg 3-05-04 10:29:09 AM cmendoza



FIRST FLOOR PLAN - WEST

SCALE: 1/8" = 1'-0"

1

north

KEY PLAN

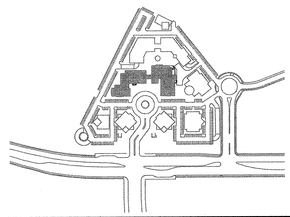

tBP
architecture
planning
interiors
management

tBP/Architecture
1000 Burnett Ave, Suite 140
Concord, CA 94520
ph: 9252466419 fx: 9252466495

architect

INFRASTRUCTURE DESIGN ASSOCIATES
1440 BROADWAY
SUITE 304 OAKLAND,
CA. 94612
PH: (510) 238-8000
FAX: (510) 238-8009

EXPIRES 12/31/04
Regis. No. 04166

consultant

APPROVED DSA
DIV. OF THE STATE ARCHITECT
OFFICE OF REGIONAL PROJECTS
BY: _____
APPL. NO. 04-119
AC. NO. FLS 58
DATE: 6-7-04

agency

SAN RAMON VALLEY CENTER

CONTRA COSTA COMMUNITY COLLEGE DISTRICT

SAN RAMON, CALIFORNIA

owner

tBP project number : 20212.00
file name:
drawn by: IDA checked by:
date: 03-09-04 plot scale: 1:1

Rev:	date:	description:
1	05-26-04	Design Clarification

drawing title: TELECOM OUTLETS FIRST FLOOR PLAN (WEST)
building no:
drawing no: T2.1.1
drawing of

G:\San Ramon Valley Center\Bid Set\Acad\T211.dwg 5-27-04 12:02:39 PM cmendoza

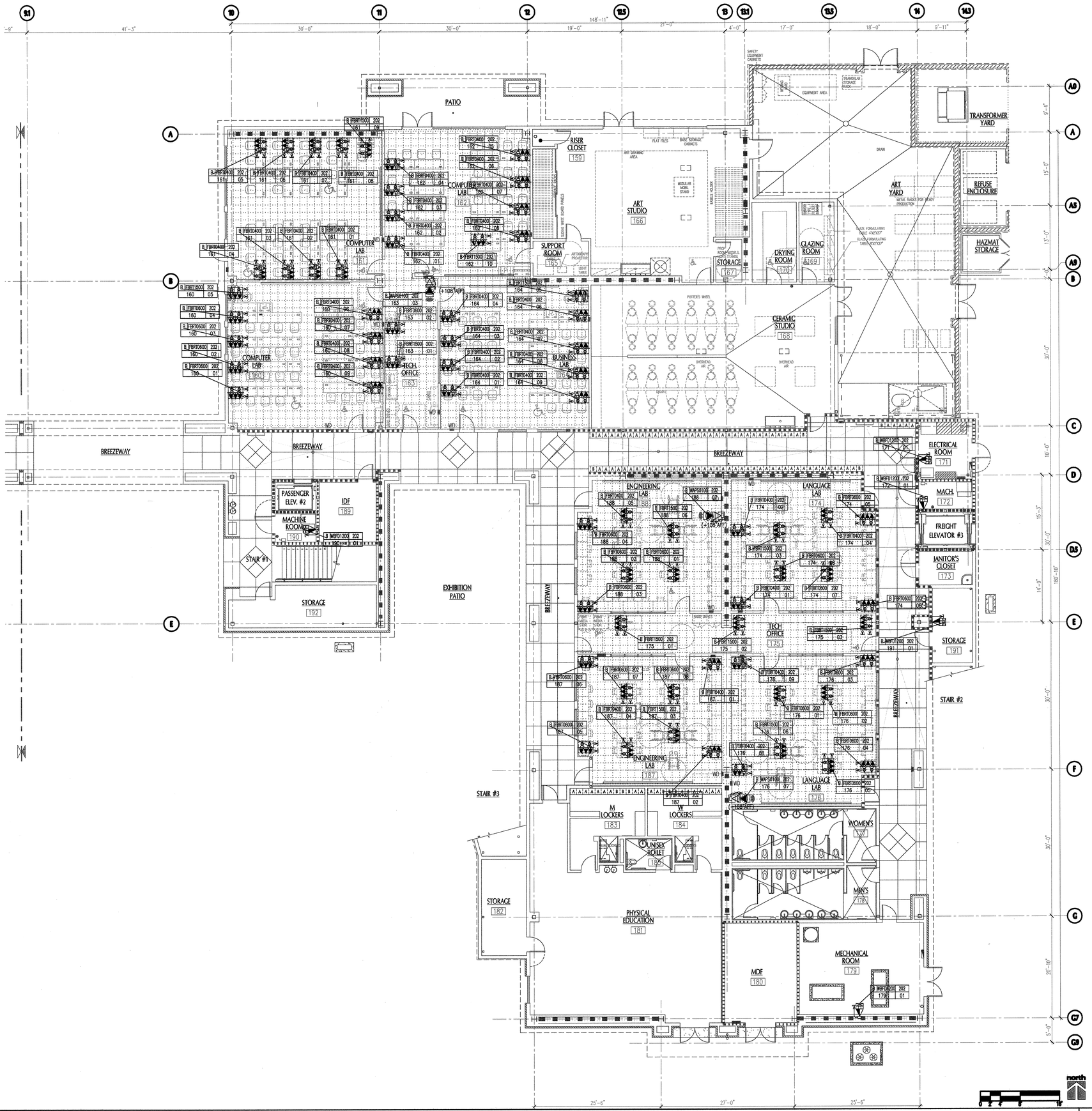

FIRST FLOOR PLAN - EAST
SCALE: 1/8" = 1'-0"

1

KEY PLAN

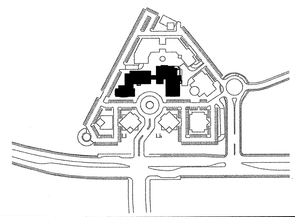

tBP
architecture
planning
interiors
management

tBP/Architecture
1000 Burnett Ave, Suite 140
Concord, CA 94520
ph: 9252466419 fx: 9252466495

architect

INFRASTRUCTURE DESIGN ASSOCIATES
1440 BROADWAY
SUITE 304 OAKLAND,
CA. 94612
PH: (510) 238-8000
FAX: (510) 238-8009

EXPIRES 12/31/04
Regis. No. 04166

consultant

APPROVED
ENGINEERING STAMP
DIV. OF THE STATE ARCHITECT
APPL. NO. 30719
DATE 5-27-04

agency

SAN RAMON VALLEY CENTER

CONTRA COSTA COMMUNITY COLLEGE DISTRICT

SAN RAMON, CALIFORNIA

owner

tBP project number : 20212.00
file name:
drawn by: IDA checked by:
date: 03-09-04 plot scale: 1:1

Rev:	date:	description:
1	05-26-04	Design Clarification

drawing title: TELECOM OUTLETS FIRST FLOOR PLAN (EAST)
building no:

drawing no: T2.1.2
drawing of

G:\San Ramon Valley Center\Bid Set\Acad\T212.dwg 5-27-04 11:52:17 AM cmendoza

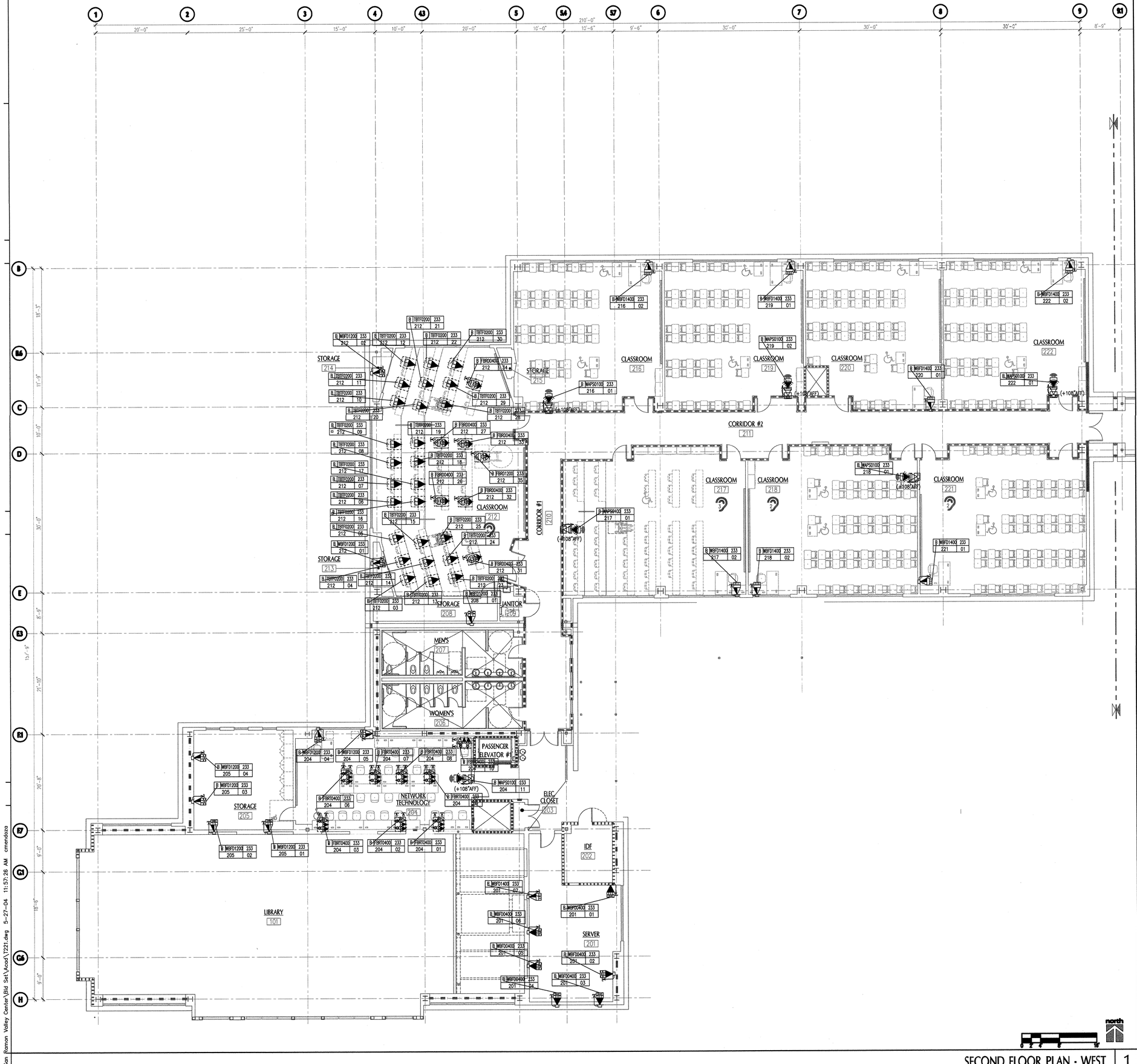

KEY PLAN

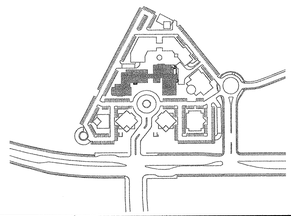

SECOND FLOOR PLAN - WEST
SCALE: 1/8" = 1'-0"

1

tBP
architecture
planning
interiors
management

tBP/Architecture
1000 Burnett Ave, Suite 140
Concord, CA 94520
ph: 925.246.6419 fx: 925.246.6495

architect

INFRASTRUCTURE DESIGN ASSOCIATES
1440 BROADWAY
SUITE 304 OAKLAND,
CA. 94612
PH: (510) 238-8000
FAX: (510) 238-8009

EXPIRES 12/31/04
Regis. No. 04166

consultant

APPROVED
FOR THE STATE ARCHITECT
OFFICE OF REGULATION SERVICES
APPL. NO. 105719
BY _____ FEE _____
DATE 6-9-04

agency

SAN RAMON VALLEY CENTER

CONTRA COSTA COMMUNITY COLLEGE DISTRICT

SAN RAMON, CALIFORNIA

owner

tBP project number : 20212.00
file name:
drawn by: IDA checked by:
date: 03-09-04 plot scale: 1:1

Rev:	date:	description:
1	05-26-04	Design Clarification

drawing title: building no:
TELECOM OUTLETS
SECOND FLOOR
PLAN (WEST)

drawing no:
T2.2.1
drawing of

G:\San Ramon Valley Center\Bid Set\Acad\T221.dwg 5-27-04 11:57:26 AM cmendoza

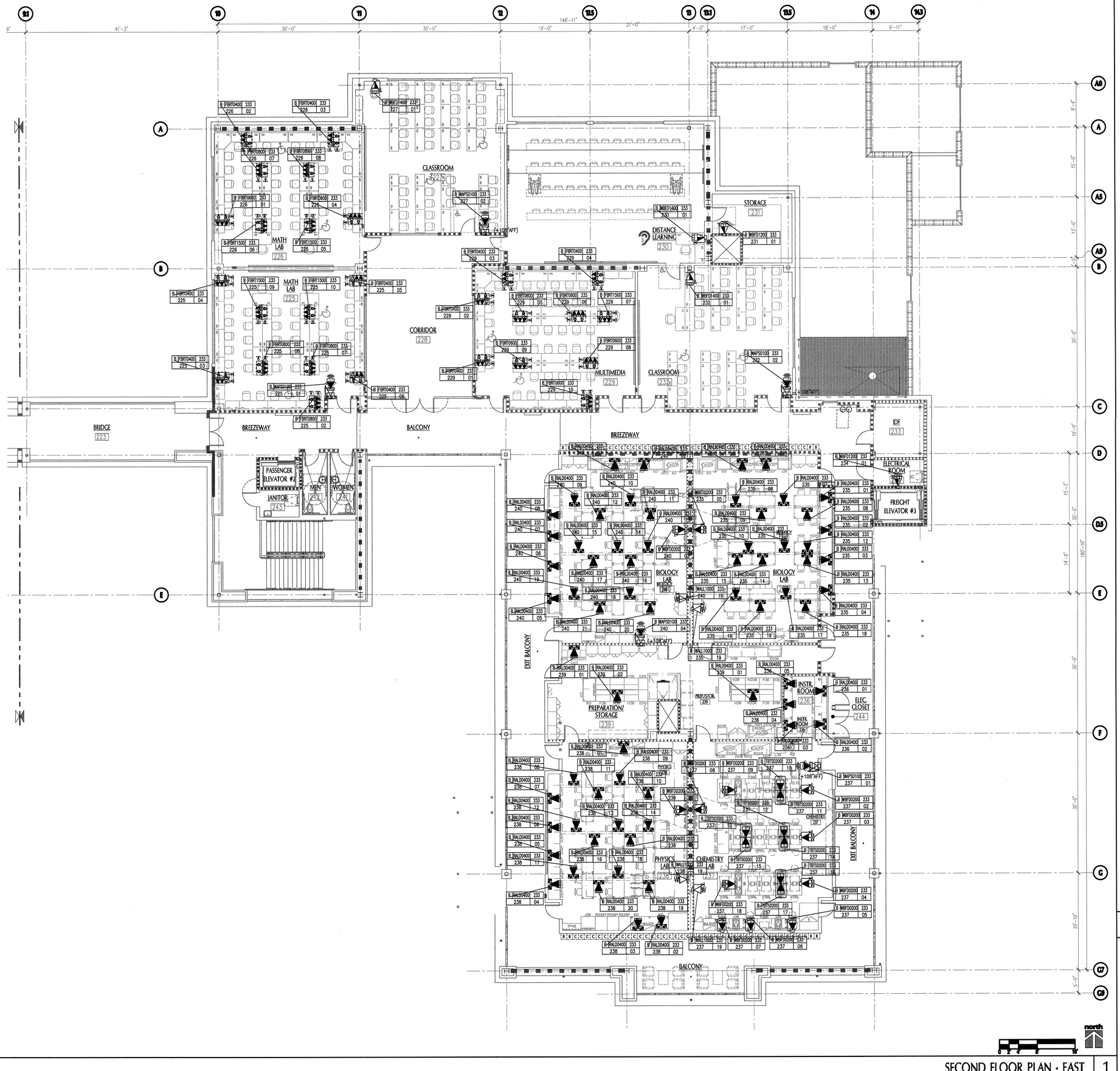

SECOND FLOOR PLAN - EAST
SCALE: 1/8" = 1'-0"

1

KEY PLAN

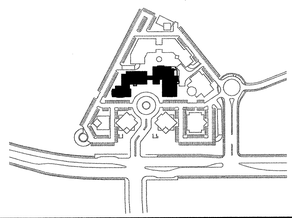

tBP
architecture
planning
interiors
management

tBP/Architecture
1000 Burnett Ave, Suite 140
Concord, CA 94520
ph: 925.246.6419 fx: 925.246.6495

architect

INFRASTRUCTURE DESIGN ASSOCIATES
1440 BROADWAY
SUITE 304 OAKLAND,
CA. 94612
PH: (510) 238-8000
FAX: (510) 238-8009

EXPIRES 12/31/04
Regis. No. 04166

consultant

agency

SAN RAMON VALLEY CENTER

CONTRA COSTA COMMUNITY COLLEGE DISTRICT

SAN RAMON, CALIFORNIA

owner

tBP project number : 20212.00

file name:

drawn by: IDA checked by:

date: 03-09-04 plot scale: 1:1

Rev:	date:	description:
1	05-26-04	Design Clarification

drawing title: building no.:
TELECOM OUTLETS
SECOND FLOOR
PLAN (EAST)

drawing no.:
T2.2.2
drawing of

G:\San Ramon Valley Center\Bid Set\Acad\T222.dwg 5-27-04 11:56:07 AM cmendoza

GENERAL NOTES

A. THE CONTRACTOR IS RESPONSIBLE FOR PROVIDING SEISMIC DESIGN CALCULATIONS AND SEISMIC DESIGN DRAWINGS PREPARED BY THE CONTRACTOR'S CALIFORNIA CERTIFIED STRUCTURAL ENGINEER FOR COORDINATION AND APPROVAL BY THE OWNER'S REPRESENTATIVE PRIOR TO FABRICATING OR INSTALLING ANY SUPPORTS FOR TELECOM EQUIPMENT. ANY PROPOSED REINFORCEMENT TO BE THE RESPONSIBILITY OF THE CONTRACTOR.

B. COORDINATE SEISMIC SUPPORT DESIGN WITH ARCHITECTURAL, STRUCTURAL, MECHANICAL, ELECTRICAL, PLUMBING, FIRE PROTECTION, AND OTHER TRADES.

C. ALL CONDUIT PENETRATIONS THROUGH FIRE-RATED WALLS AND FLOORS SHALL BE SEALED AND EQUIPPED WITH U.L LISTED PENETRATION ASSEMBLIES TO MAINTAIN FIRE SEPARATION RATING.

D. THE CONTRACTOR SHALL VERIFY ALL CRITICAL DIMENSIONS WITH THE ARCHITECTURAL DRAWINGS.

NOTES | 6

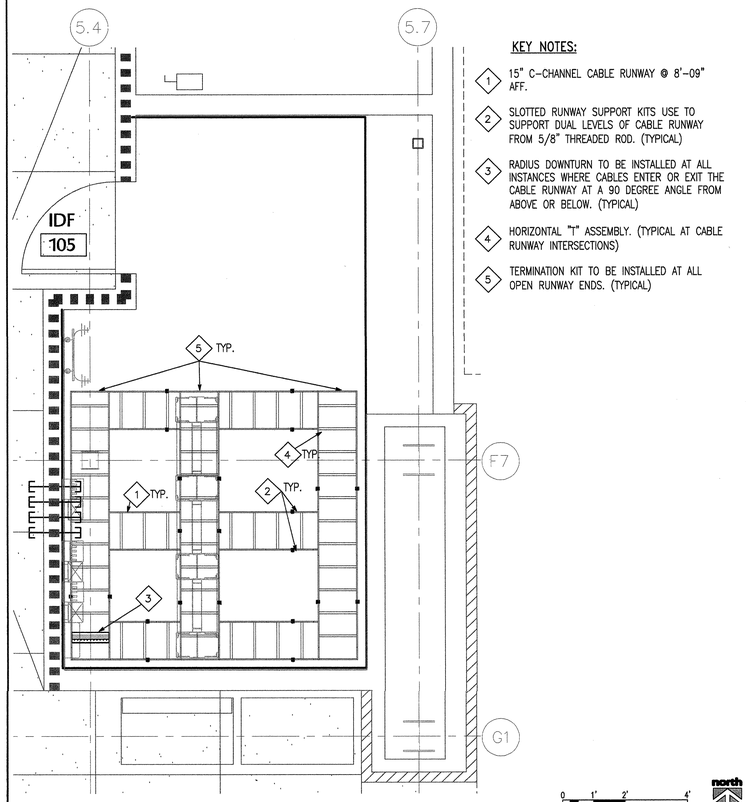

KEY NOTES:

1. 15" C-CHANNEL CABLE RUNWAY @ 8'-09" AFF.
2. SLOTTED RUNWAY SUPPORT KITS USE TO SUPPORT DUAL LEVELS OF CABLE RUNWAY FROM 5/8" THREADED ROD. (TYPICAL)
3. RADIUS DOWNTURN TO BE INSTALLED AT ALL INSTANCES WHERE CABLES ENTER OR EXIT THE CABLE RUNWAY AT A 90 DEGREE ANGLE FROM ABOVE OR BELOW. (TYPICAL)
4. HORIZONTAL "T" ASSEMBLY. (TYPICAL AT CABLE RUNWAY INTERSECTIONS)
5. TERMINATION KIT TO BE INSTALLED AT ALL OPEN RUNWAY ENDS. (TYPICAL)

UPPER 15" CABLE RUNWAY @ 8'-9" A.F.F. | 4

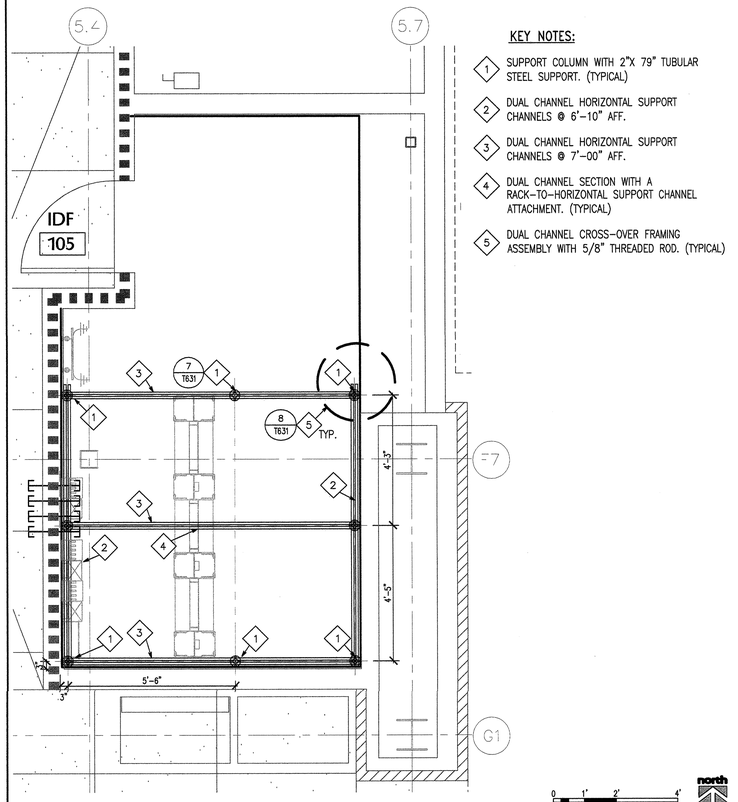

KEY NOTES:

1. SUPPORT COLUMN WITH 2"X 79" TUBULAR STEEL SUPPORT. (TYPICAL)
2. DUAL CHANNEL HORIZONTAL SUPPORT CHANNELS @ 6'-10" AFF.
3. DUAL CHANNEL HORIZONTAL SUPPORT CHANNELS @ 7'-00" AFF.
4. DUAL CHANNEL SECTION WITH A RACK-TO-HORIZONTAL SUPPORT CHANNEL ATTACHMENT. (TYPICAL)
5. DUAL CHANNEL CROSS-OVER FRAMING ASSEMBLY WITH 5/8" THREADED ROD. (TYPICAL)

DUAL CHANNEL SUPPORT | 2

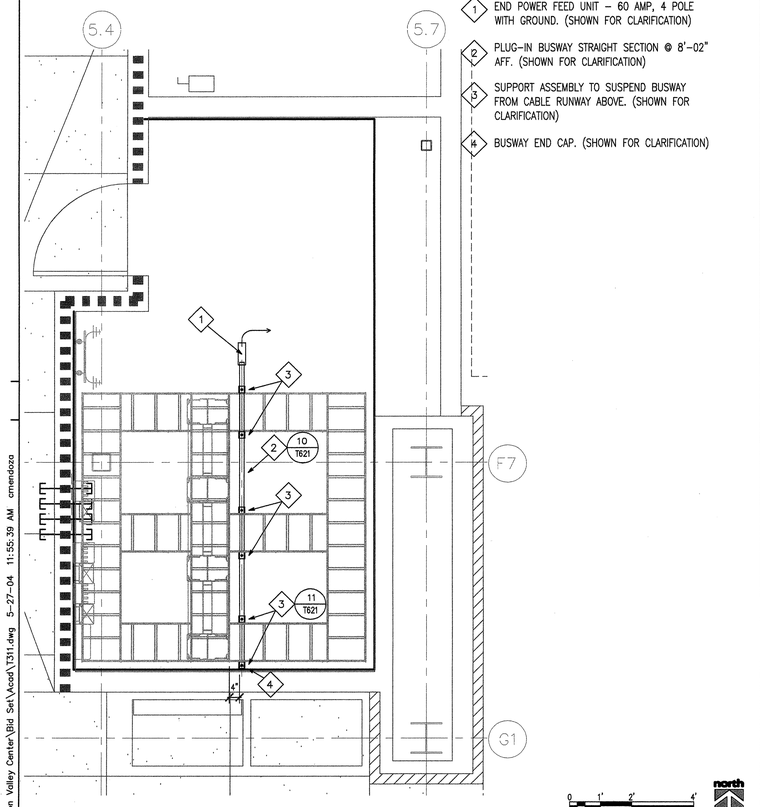

KEY NOTES:

1. END POWER FEED UNIT – 60 AMP, 4 POLE WITH GROUND. (SHOWN FOR CLARIFICATION)
2. PLUG-IN BUSWAY STRAIGHT SECTION @ 8'-02" AFF. (SHOWN FOR CLARIFICATION)
3. SUPPORT ASSEMBLY TO SUSPEND BUSWAY FROM CABLE RUNWAY ABOVE. (SHOWN FOR CLARIFICATION)
4. BUSWAY END CAP. (SHOWN FOR CLARIFICATION)

STARLINE ELECTRICAL BUSWAY @ 8'-2" A.F.F. (SHOWN FOR LOCATION-SEE ELECTRICAL DRAWINGS FOR WIRING) | 5

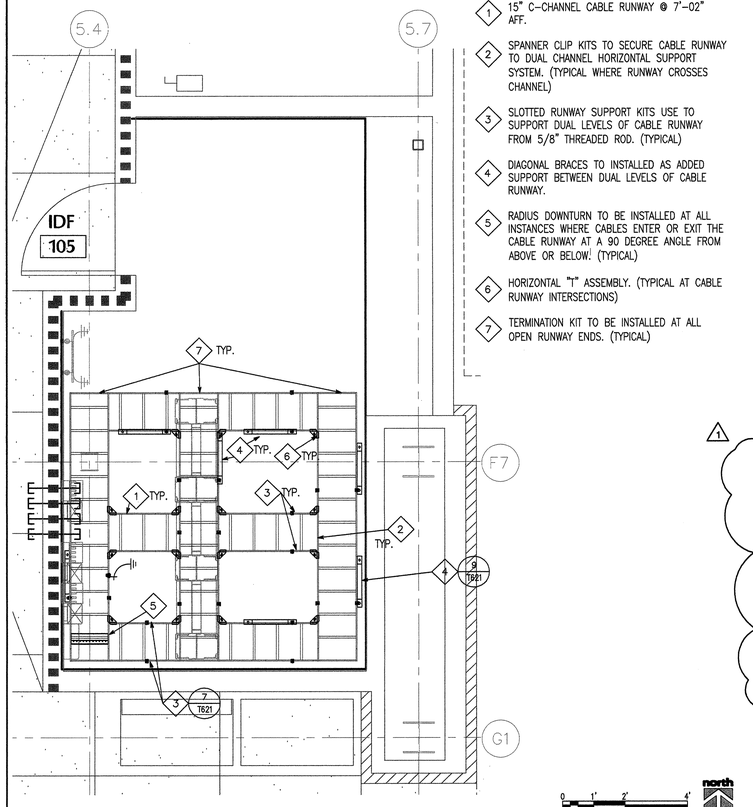

KEY NOTES:

1. 15" C-CHANNEL CABLE RUNWAY @ 7'-02" AFF.
2. SPANNER CLIP KITS TO SECURE CABLE RUNWAY TO DUAL CHANNEL HORIZONTAL SUPPORT SYSTEM. (TYPICAL WHERE RUNWAY CROSSES CHANNEL)
3. SLOTTED RUNWAY SUPPORT KITS USE TO SUPPORT DUAL LEVELS OF CABLE RUNWAY FROM 5/8" THREADED ROD. (TYPICAL)
4. DIAGONAL BRACES TO INSTALLED AS ADDED SUPPORT BETWEEN DUAL LEVELS OF CABLE RUNWAY.
5. RADIUS DOWNTURN TO BE INSTALLED AT ALL INSTANCES WHERE CABLES ENTER OR EXIT THE CABLE RUNWAY AT A 90 DEGREE ANGLE FROM ABOVE OR BELOW. (TYPICAL)
6. HORIZONTAL "T" ASSEMBLY. (TYPICAL AT CABLE RUNWAY INTERSECTIONS)
7. TERMINATION KIT TO BE INSTALLED AT ALL OPEN RUNWAY ENDS. (TYPICAL)

LOWER 15" CABLE RUNWAY @ 7'-2" A.F.F. | 3

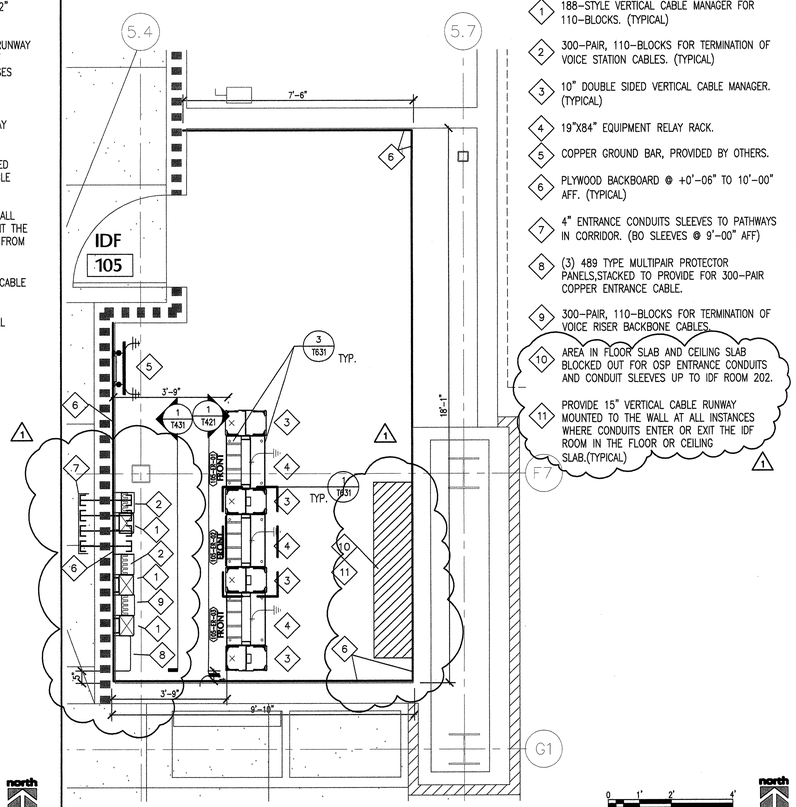

KEY NOTES:

1. 188-STYLE VERTICAL CABLE MANAGER FOR 110-BLOCKS. (TYPICAL)
2. 300-PAIR, 110-BLOCKS FOR TERMINATION OF VOICE STATION CABLES. (TYPICAL)
3. 10" DOUBLE SIDED VERTICAL CABLE MANAGER. (TYPICAL)
4. 19"X84" EQUIPMENT RELAY RACK.
5. COPPER GROUND BAR, PROVIDED BY OTHERS.
6. PLYWOOD BACKBOARD @ +0'-06" TO 10'-00" AFF. (TYPICAL)
7. 4" ENTRANCE CONDUITS SLEEVES TO PATHWAYS IN CORRIDOR. (80 SLEEVES @ 9'-00" AFF)
8. (3) 489 TYPE MULTIPAIR PROTECTOR PANELS,STACKED TO PROVIDE FOR 300-PAIR COPPER ENTRANCE CABLE.
9. 300-PAIR, 110-BLOCKS FOR TERMINATION OF VOICE RISER BACKBONE CABLES.
10. AREA IN FLOOR SLAB AND CEILING SLAB BLOCKED OUT FOR OSP ENTRANCE CONDUITS AND CONDUIT SLEEVES UP TO IDF ROOM 202.
11. PROVIDE 15" VERTICAL CABLE RUNWAY MOUNTED TO THE WALL AT ALL INSTANCES WHERE CONDUITS ENTER OR EXIT THE IDF ROOM IN THE FLOOR OR CEILING SLAB.(TYPICAL)

EQUIPMENT FLOOR PLAN | 1

tBP
architecture
planning
interior
management

tBP/Architecture
1000 Burnett Ave, Suite 140
Concord, CA 94520
ph: 9253466495 fx: 9253466419

LICENSED ARCHITECT STATE OF CALIFORNIA RICHARD C. MORRIS No. C-9805 RENEWAL 08-31-05

architect

INFRASTRUCTURE DESIGN ASSOCIATES
1440 BROADWAY
SUITE 304 OAKLAND,
CA. 94612
PH: (510) 238-8000
FAX: (510) 238-8009

REGISTERED COMMUNICATIONS DISTRIBUTION DESIGNER BICSI
EXPIRES 12/31/04
Regis. No. 04166

consultant

APPROVED STAMP
DIV. OF THE STATE ARCHITECT
OFFICE OF REGULATION SERVICES
APPL. NO. 03C0719
REVIEWED FOR ACCESSIBILITY
DATE: 5-7-04

agency

SAN RAMON VALLEY CENTER

CONTRA COSTA COMMUNITY COLLEGE DISTRICT

SAN RAMON, CALIFORNIA

owner

tBP project number : 20212.00
file name:
drawn by: IDA checked by:
date: 03-09-04 plot scale: 1:1

Rev:	date:	description:
1	05-26-04	Design Clarification

AS NOTED

drawing title: FIRST FLOOR ENLARGED PLANS IDF 105
building no:

drawing no: T3.1.1
drawing of

G:\San Ramon Valley Center\Bid Set\Acad\T311.dwg 5-27-04 11:55:39 AM cmendoza

GENERAL NOTES

A. THE CONTRACTOR IS RESPONSIBLE FOR PROVIDING SEISMIC DESIGN CALCULATIONS AND SEISMIC DESIGN DRAWINGS PREPARED BY THE CONTRACTOR'S CALIFORNIA CERTIFIED STRUCTURAL ENGINEER FOR COORDINATION AND APPROVAL BY THE OWNER'S REPRESENTATIVE PRIOR TO FABRICATING OR INSTALLING ANY SUPPORTS FOR TELECOM EQUIPMENT. ANY PROPOSED REINFORCEMENT TO BE THE RESPONSIBILITY OF THE CONTRACTOR.

B. COORDINATE SEISMIC SUPPORT DESIGN WITH ARCHITECTURAL, STRUCTURAL, MECHANICAL, ELECTRICAL, PLUMBING, FIRE PROTECTION, AND OTHER TRADES.

C. ALL CONDUIT PENETRATIONS THROUGH FIRE-RATED WALLS AND FLOORS SHALL BE SEALED AND EQUIPPED WITH U.L LISTED PENETRATION ASSEMBLIES TO MAINTAIN FIRE SEPARATION RATING.

D. THE CONTRACTOR SHALL VERIFY ALL CRITICAL DIMENSIONS WITH THE ARCHITECTURAL DRAWINGS.

NOTES | 6

KEY NOTES:

1. 15" C-CHANNEL CABLE RUNWAY @ 8'-06" AFF.
2. SLOTTED RUNWAY SUPPORT KITS USE TO SUPPORT DUAL LEVELS OF CABLE RUNWAY FROM 5/8" THREADED ROD. (TYPICAL)
3. RADIUS DOWNTURN TO BE INSTALLED AT ALL INSTANCES WHERE CABLES ENTER OR EXIT THE CABLE RUNWAY AT A 90 DEGREE ANGLE FROM ABOVE OR BELOW. (TYPICAL)
4. HORIZONTAL "T" ASSEMBLY. (TYPICAL AT CABLE RUNWAY INTERSECTIONS)
5. TERMINATION KIT TO BE INSTALLED AT ALL OPEN RUNWAY ENDS. (TYPICAL)
6. CABLE RUNWAY WALL SUPPORT

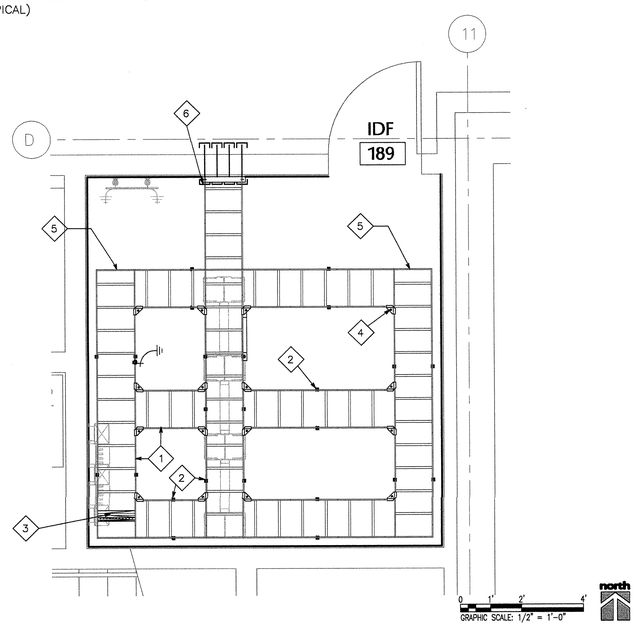

UPPER 15" CABLE RUNWAY @ 8'-9" A.F.F. | 4

KEY NOTES:

1. SUPPORT COLUMN WITH 2"X 79" TUBULAR STEEL SUPPORT. (TYPICAL)
2. DUAL CHANNEL HORIZONTAL SUPPORT CHANNELS @ 6'-10" AFF.
3. DUAL CHANNEL HORIZONTAL SUPPORT CHANNELS @ 7'-00" AFF.
4. DUAL CHANNEL SECTION WITH A RACK-TO-HORIZONTAL SUPPORT CHANNEL ATTACHMENT. (TYPICAL)
5. DUAL CHANNEL CROSS-OVER FRAMING ASSEMBLY WITH 5/8" THREADED ROD.

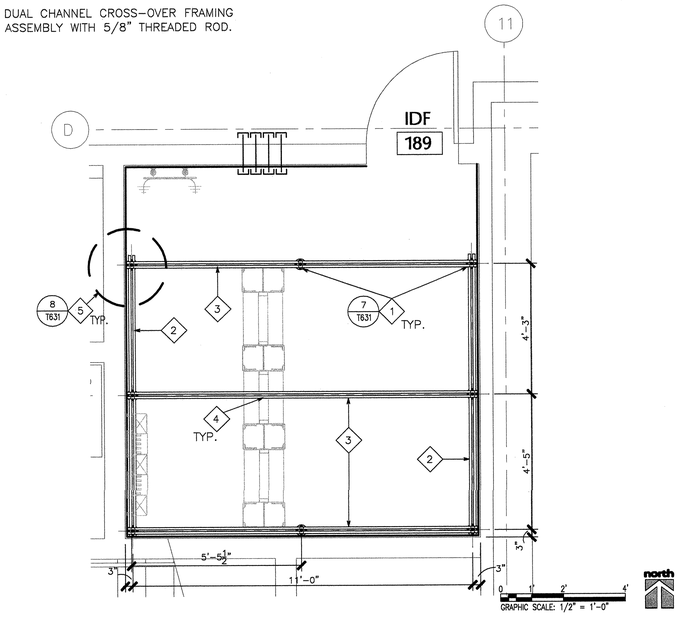

DUAL CHANNEL SUPPORT | 2

KEY NOTES:

1. END POWER FEED UNIT – 60 AMP, 4 POLE WITH GROUND. (SHOWN FOR CLARIFICATION)
2. PLUG-IN BUSWAY STRAIGHT SECTION @ 8'-02" AFF. (SHOWN FOR CLARIFICATION)
3. SUPPORT ASSEMBLY TO SUSPEND BUSWAY FROM CABLE RUNWAY ABOVE. (SHOWN FOR CLARIFICATION)
4. BUSWAY END CAP. (SHOWN FOR CLARIFICATION)

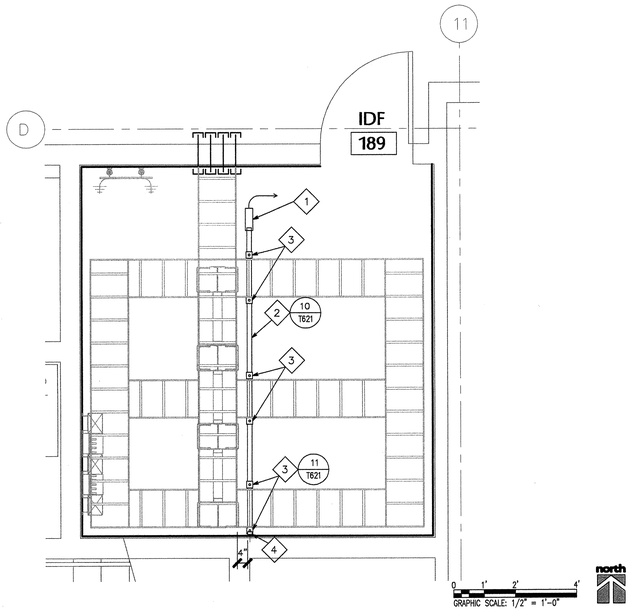

STARLINE ELECTRICAL BUSWAY @ 8'-2" A.F.F. (SHOWN FOR LOCATION-SEE ELECTRICAL DRAWINGS FOR WIRING) | 5

KEY NOTES:

1. 15" C-CHANNEL CABLE RUNWAY @ 7'-02" AFF.
2. SPANNER CLIP KITS TO SECURE CABLE RUNWAY TO DUAL CHANNEL HORIZONTAL SUPPORT SYSTEM. (TYPICAL WHERE RUNWAY CROSSES CHANNEL)
3. SLOTTED RUNWAY SUPPORT KITS USE TO SUPPORT DUAL LEVELS OF CABLE RUNWAY FROM 5/8" THREADED ROD. (TYPICAL)
4. DIAGONAL BRACES TO INSTALLED AS ADDED SUPPORT BETWEEN DUAL LEVELS OF CABLE RUNWAY.
5. RADIUS DOWNTURN TO BE INSTALLED AT ALL INSTANCES WHERE CABLES ENTER OR EXIT THE CABLE RUNWAY AT A 90 DEGREE ANGLE FROM ABOVE OR BELOW. (TYPICAL)
6. HORIZONTAL "T" ASSEMBLY. (TYPICAL AT CABLE RUNWAY INTERSECTIONS)
7. TERMINATION KIT TO BE INSTALLED AT ALL OPEN RUNWAY ENDS. (TYPICAL)

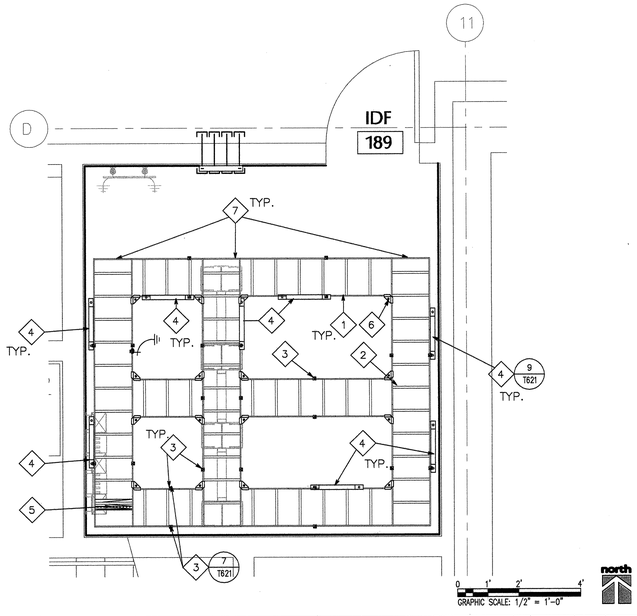

LOWER 15" CABLE RUNWAY @ 7'-2" A.F.F. | 3

KEY NOTES:

1. 188-STYLE VERTICAL CABLE MANAGER FOR 110-BLOCKS. (TYPICAL)
2. 300-PAIR, 110-BLOCKS FOR TERMINATION OF VOICE STATION CABLES. (TYPICAL)
3. 10" DOUBLE SIDED VERTICAL CABLE MANAGER. (TYPICAL)
4. 19"X84" EQUIPMENT RELAY RACK.
5. COPPER GROUND BAR, PROVIDED BY OTHERS.
6. PLYWOOD BACKBOARD @ +0'-06" TO 10'-00" AFF. (TYPICAL)
7. 4" ENTRANCE CONDUITS SLEEVES TO PATHWAYS IN CORRIDOR. (BO SLEEVES @ 9'-00" AFF)

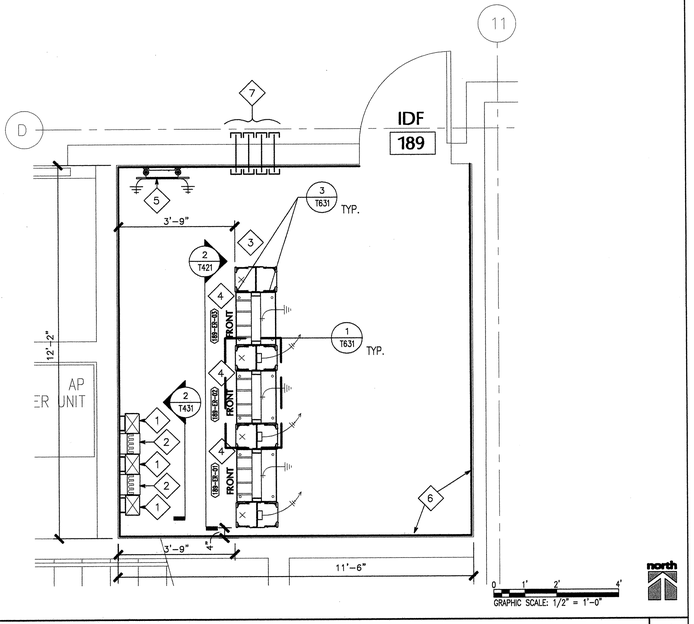

FLOOR PLAN - NORTH | 1

tBP architecture planning interiors management

LICENSED ARCHITECT RENEWAL 12/31/05 REG. NO. C-8885 STATE OF CALIFORNIA

LICENSED ARCHITECT RENEWAL 08/31/05 REG. NO. C-8885 STATE OF CALIFORNIA

tBP/Architecture
1000 Burnett Ave, Suite 140
Concord, CA 94520
ph: 925.246.6419 fx: 925.246.6495

architect

INFRASTRUCTURE DESIGN ASSOCIATES
1440 BROADWAY
SUITE 304 OAKLAND,
CA. 94612
PH: (510) 238-8000
FAX: (510) 238-8009

BICSI REGISTERED COMMUNICATIONS DISTRIBUTION DESIGNER
EXPIRES 12/31/04
Regis. No. 04166

consultant

BY ORDER OF THE STATE ARCHITECT OFFICE OF REGULATION SERVICES
APPL NO. 105719
AC-
FEE $
DATE

agency

SAN RAMON VALLEY CENTER

CONTRA COSTA COMMUNITY COLLEGE DISTRICT

SAN RAMON, CALIFORNIA

owner

tBP project number : 20212.00
file name:
drawn by: IDA checked by:
date: 03-09-04 plot scale: 1:1

Rev:	date:	description:

AS NOTED

drawing title: FIRST FLOOR ENLARGED PLANS IDF 189

building no:

drawing no: T3.1.2

drawing of

G:\San Ramon Valley Center\DSA\Acad\T312.dwg 3-05-04 11:04:36 AM cmendoza

GENERAL NOTES

A. THE CONTRACTOR IS RESPONSIBLE FOR PROVIDING SEISMIC DESIGN CALCULATIONS AND SEISMIC DESIGN DRAWINGS PREPARED BY THE CONTRACTOR'S CALIFORNIA CERTIFIED STRUCTURAL ENGINEER FOR COORDINATION AND APPROVAL BY THE OWNER'S REPRESENTATIVE PRIOR TO FABRICATING OR INSTALLING ANY SUPPORTS FOR TELECOM EQUIPMENT. ANY PROPOSED REINFORCEMENT TO BE THE RESPONSIBILITY OF THE CONTRACTOR.

B. COORDINATE SEISMIC SUPPORT DESIGN WITH ARCHITECTURAL, STRUCTURAL, MECHANICAL, ELECTRICAL, PLUMBING, FIRE PROTECTION, AND OTHER TRADES.

C. ALL CONDUIT PENETRATIONS THROUGH FIRE-RATED WALLS AND FLOORS SHALL BE SEALED AND EQUIPPED WITH U.L LISTED PENETRATION ASSEMBLIES TO MAINTAIN FIRE SEPARATION RATING.

D. THE CONTRACTOR SHALL VERIFY ALL CRITICAL DIMENSIONS WITH THE ARCHITECTURAL DRAWINGS.

NOTES | 6

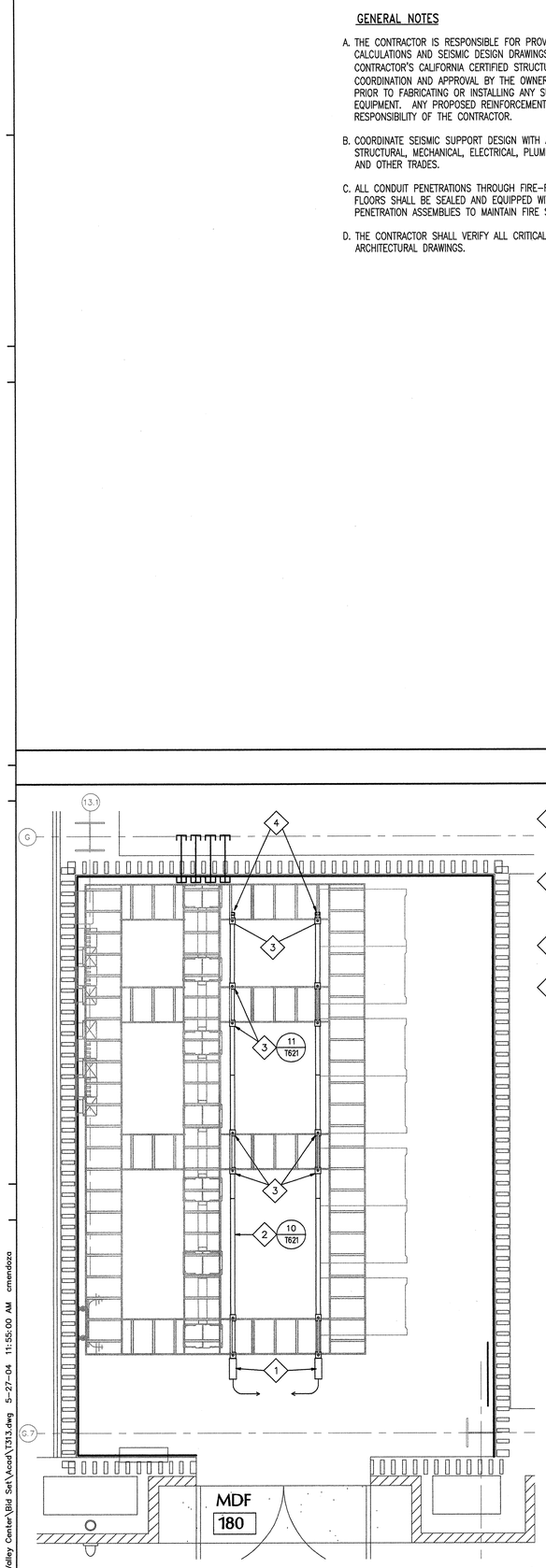

KEY NOTES:

1. END POWER FEED UNIT – 60 AMP, 4 POLE WITH GROUND. (SHOWN FOR CLARIFICATION)
2. PLUG-IN BUSWAY STRAIGHT SECTION @ 8'-02" AFF. (SHOWN FOR CLARIFICATION)
3. SUPPORT ASSEMBLY TO SUSPEND BUSWAY FROM CABLE RUNWAY ABOVE. (SHOWN FOR CLARIFICATION)
4. BUSWAY END CAP. (SHOWN FOR CLARIFICATION)

STARLINE ELECTRICAL BUSWAY @ 8'-2" A.F.F. (SHOWN FOR LOCATION-SEE ELECTRICAL DRAWINGS FOR WIRING) | 5

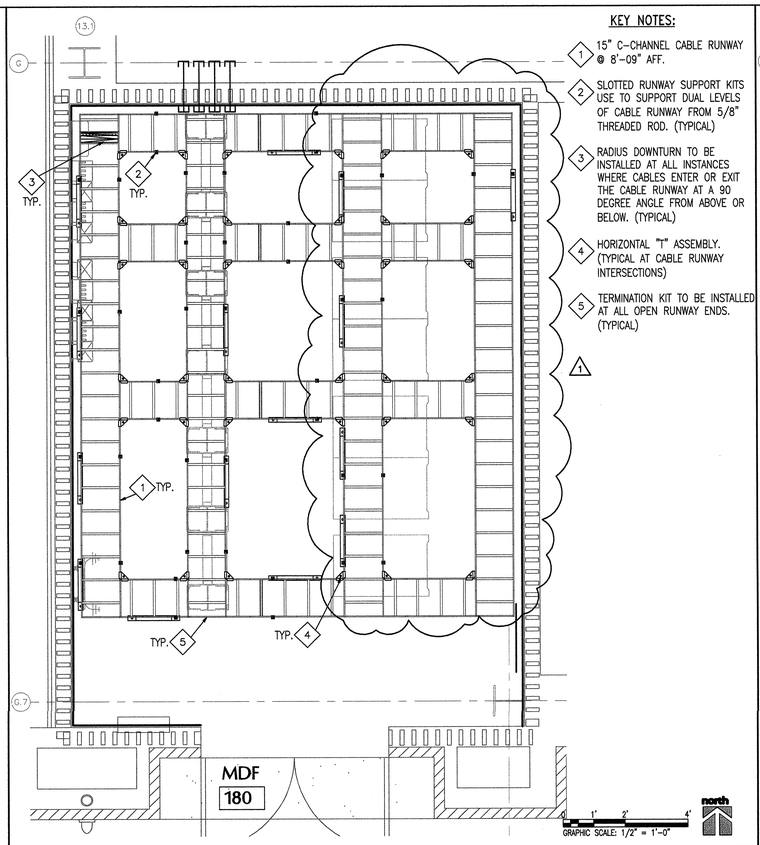

KEY NOTES:

1. 15" C-CHANNEL CABLE RUNWAY @ 8'-09" AFF.
2. SLOTTED RUNWAY SUPPORT KITS USE TO SUPPORT DUAL LEVELS OF CABLE RUNWAY FROM 5/8" THREADED ROD. (TYPICAL)
3. RADIUS DOWNTURN TO BE INSTALLED AT ALL INSTANCES WHERE CABLES ENTER OR EXIT THE CABLE RUNWAY AT A 90 DEGREE ANGLE FROM ABOVE OR BELOW. (TYPICAL)
4. HORIZONTAL "T" ASSEMBLY. (TYPICAL AT CABLE RUNWAY INTERSECTIONS)
5. TERMINATION KIT TO BE INSTALLED AT ALL OPEN RUNWAY ENDS. (TYPICAL)

UPPER 15" CABLE RUNWAY @ 8'-9" A.F.F. | 4

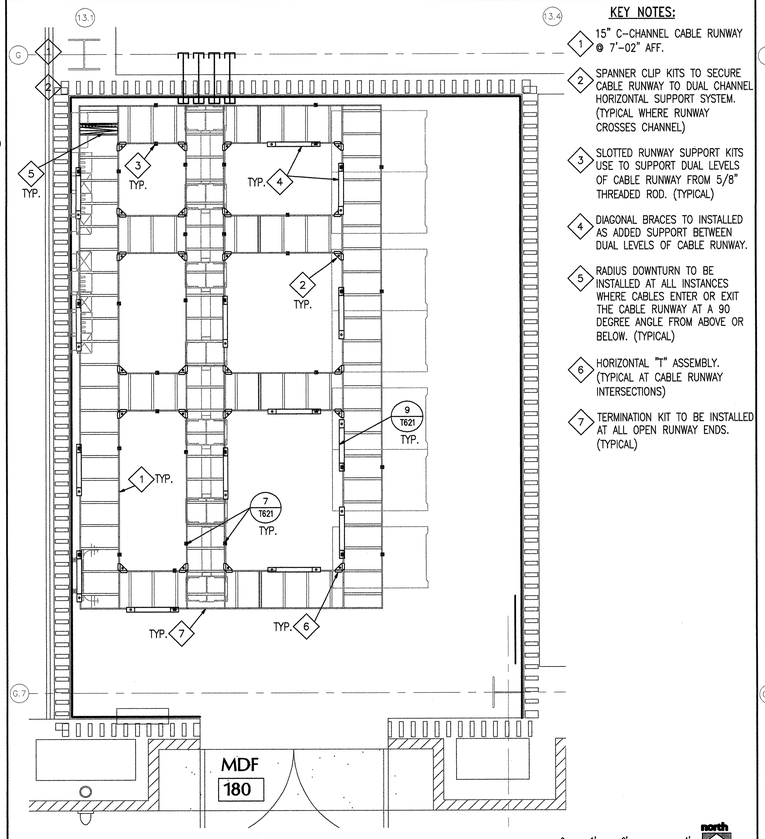

KEY NOTES:

1. 15" C-CHANNEL CABLE RUNWAY @ 7'-02" AFF.
2. SPANNER CLIP KITS TO SECURE CABLE RUNWAY TO DUAL CHANNEL HORIZONTAL SUPPORT SYSTEM. (TYPICAL WHERE RUNWAY CROSSES CHANNEL)
3. SLOTTED RUNWAY SUPPORT KITS USE TO SUPPORT DUAL LEVELS OF CABLE RUNWAY FROM 5/8" THREADED ROD. (TYPICAL)
4. DIAGONAL BRACES TO INSTALLED AS ADDED SUPPORT BETWEEN DUAL LEVELS OF CABLE RUNWAY.
5. RADIUS DOWNTURN TO BE INSTALLED AT ALL INSTANCES WHERE CABLES ENTER OR EXIT THE CABLE RUNWAY AT A 90 DEGREE ANGLE FROM ABOVE OR BELOW. (TYPICAL)
6. HORIZONTAL "T" ASSEMBLY. (TYPICAL AT CABLE RUNWAY INTERSECTIONS)
7. TERMINATION KIT TO BE INSTALLED AT ALL OPEN RUNWAY ENDS. (TYPICAL)

LOWER 15" CABLE RUNWAY @ 7'-2" A.F.F. | 3

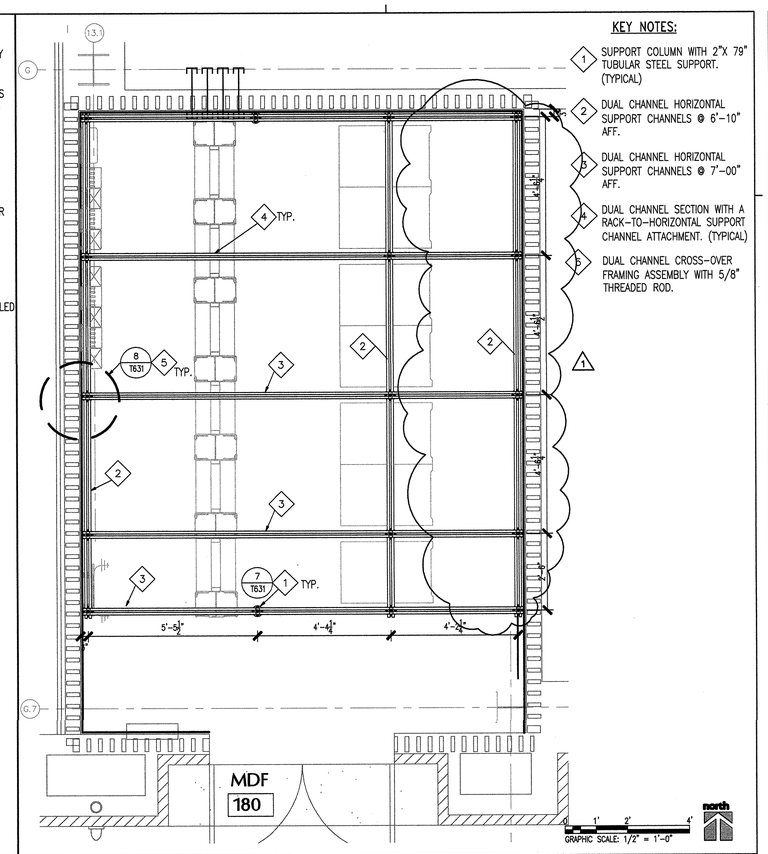

KEY NOTES:

1. SUPPORT COLUMN WITH 2"X 79" TUBULAR STEEL SUPPORT. (TYPICAL)
2. DUAL CHANNEL HORIZONTAL SUPPORT CHANNELS @ 6'-10" AFF.
3. DUAL CHANNEL HORIZONTAL SUPPORT CHANNELS @ 7'-00" AFF.
4. DUAL CHANNEL SECTION WITH A RACK-TO-HORIZONTAL SUPPORT CHANNEL ATTACHMENT. (TYPICAL)
5. DUAL CHANNEL CROSS-OVER FRAMING ASSEMBLY WITH 5/8" THREADED ROD.

DUAL CHANNEL SUPPORT | 2

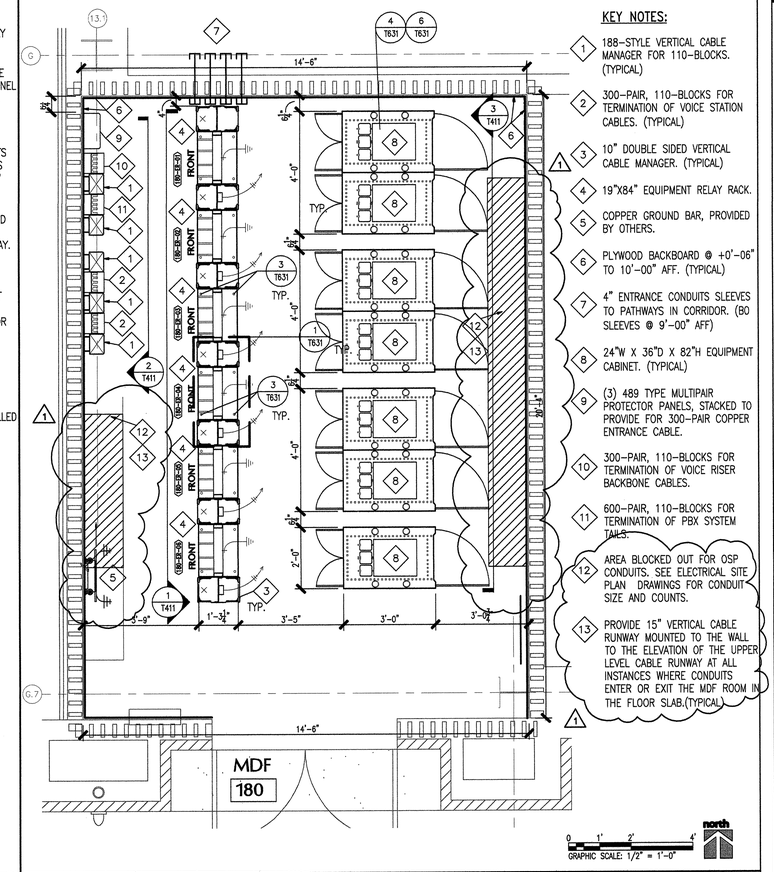

KEY NOTES:

1. 188-STYLE VERTICAL CABLE MANAGER FOR 110-BLOCKS. (TYPICAL)
2. 300-PAIR, 110-BLOCKS FOR TERMINATION OF VOICE STATION CABLES. (TYPICAL)
3. 10" DOUBLE SIDED VERTICAL CABLE MANAGER. (TYPICAL)
4. 19"X84" EQUIPMENT RELAY RACK.
5. COPPER GROUND BAR, PROVIDED BY OTHERS.
6. PLYWOOD BACKBOARD @ +0'-06" TO 10'-00" AFF. (TYPICAL)
7. 4" ENTRANCE CONDUITS SLEEVES TO PATHWAYS IN CORRIDOR. (80 SLEEVES @ 9'-00" AFF)
8. 24"W X 36"D X 82"H EQUIPMENT CABINET. (TYPICAL)
9. (3) 489 TYPE MULTIPAIR PROTECTOR PANELS, STACKED TO PROVIDE FOR 300-PAIR COPPER ENTRANCE CABLE.
10. 300-PAIR, 110-BLOCKS FOR TERMINATION OF VOICE RISER BACKBONE CABLES.
11. 600-PAIR, 110-BLOCKS FOR TERMINATION OF PBX SYSTEM TAILS.
12. AREA BLOCKED OUT FOR OSP CONDUITS. SEE ELECTRICAL SITE PLAN DRAWINGS FOR CONDUIT SIZE AND COUNTS.
13. PROVIDE 15" VERTICAL CABLE RUNWAY MOUNTED TO THE WALL TO THE ELEVATION OF THE UPPER LEVEL CABLE RUNWAY AT ALL INSTANCES WHERE CONDUITS ENTER OR EXIT THE MDF ROOM IN THE FLOOR SLAB.(TYPICAL)

EQUIPMENT FLOOR PLAN | 1

tBP
architecture
planning
interiors
management

tBP/Architecture
1000 Burnett Ave, Suite 140
Concord, CA 94520
ph: 925.246.6490 fx: 925.246.6495

architect

INFRASTRUCTURE DESIGN ASSOCIATES
1440 BROADWAY
SUITE 304 OAKLAND,
CA. 94612
PH: (510) 238-8000
FAX: (510) 238-8009

EXPIRES 12/31/04
Regis. No. 04166

consultant

APPROVED STAMP
DIV. OF THE STATE ARCHITECT
OFFICE OF REGULATION SERVICES
APPL NO. 102719
BY
DATE 6-9-04

agency

SAN RAMON VALLEY CENTER

CONTRA COSTA COMMUNITY COLLEGE DISTRICT

SAN RAMON, CALIFORNIA

owner

tBP project number : 20212.00
file name:
drawn by: IDA checked by:
date: 03-09-04 plot scale: 1:1

Rev:	date:	description:
1	05-26-04	Design Clarification

drawing title: FIRST FLOOR ENLARGED PLAN- MDF 180
building no.:

drawing no.: T3.1.3
drawing of

G:\San Ramon Valley Center\Bid Set\Acad\T313.dwg 5-27-04 11:55:00 AM cmendoza

GENERAL NOTES

A. THE CONTRACTOR IS RESPONSIBLE FOR PROVIDING SEISMIC DESIGN CALCULATIONS AND SEISMIC DESIGN DRAWINGS PREPARED BY THE CONTRACTOR'S CALIFORNIA CERTIFIED STRUCTURAL ENGINEER FOR COORDINATION AND APPROVAL BY THE OWNER'S REPRESENTATIVE PRIOR TO FABRICATING OR INSTALLING ANY SUPPORTS FOR TELECOM EQUIPMENT. ANY PROPOSED REINFORCEMENT TO BE THE RESPONSIBILITY OF THE CONTRACTOR.

B. COORDINATE SEISMIC SUPPORT DESIGN WITH ARCHITECTURAL, STRUCTURAL, MECHANICAL, ELECTRICAL, PLUMBING, FIRE PROTECTION, AND OTHER TRADES.

C. ALL CONDUIT PENETRATIONS THROUGH FIRE–RATED WALLS AND FLOORS SHALL BE SEALED AND EQUIPPED WITH U.L LISTED PENETRATION ASSEMBLIES TO MAINTAIN FIRE SEPARATION RATING.

D. THE CONTRACTOR SHALL VERIFY ALL CRITICAL DIMENSIONS WITH THE ARCHITECTURAL DRAWINGS.

NOTES | 6

KEY NOTES:

1. 15" C–CHANNEL CABLE RUNWAY @ 8'–09" AFF.
2. SLOTTED RUNWAY SUPPORT KITS USE TO SUPPORT DUAL LEVELS OF CABLE RUNWAY FROM 5/8" THREADED ROD. (TYPICAL)
3. RADIUS DOWNTURN TO BE INSTALLED AT ALL INSTANCES WHERE CABLES ENTER OR EXIT THE CABLE RUNWAY AT A 90 DEGREE ANGLE FROM ABOVE OR BELOW. (TYPICAL)
4. HORIZONTAL "T" ASSEMBLY. (TYPICAL AT CABLE RUNWAY INTERSECTIONS)
5. TERMINATION KIT TO BE INSTALLED AT ALL OPEN RUNWAY ENDS. (TYPICAL)
6. CABLE RUNWAY WALL SUPPORT.

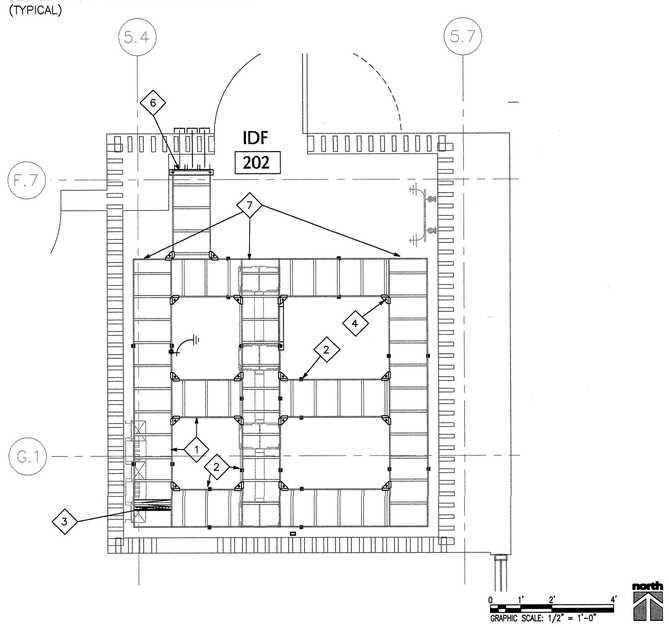

UPPER 15" CABLE RUNWAY @ 8'-9" A.F.F. | 4

KEY NOTES:

1. SUPPORT COLUMN WITH 2"X 79" TUBULAR STEEL SUPPORT. (TYPICAL)
2. DUAL CHANNEL HORIZONTAL SUPPORT CHANNELS @ 6'–10" AFF.
3. DUAL CHANNEL HORIZONTAL SUPPORT CHANNELS @ 7'–00" AFF.
4. DUAL CHANNEL SECTION WITH A RACK–TO–HORIZONTAL SUPPORT CHANNEL ATTACHMENT. (TYPICAL)
5. DUAL CHANNEL CROSS–OVER FRAMING ASSEMBLY WITH 5/8" THREADED ROD.

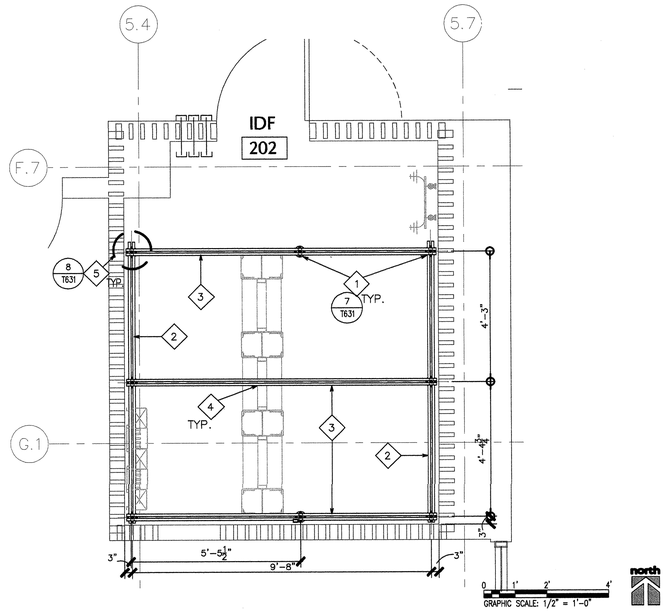

DUAL CHANNEL SUPPORT | 2

KEY NOTES:

1. END POWER FEED UNIT – 60 AMP, 4 POLE WITH GROUND. (SHOWN FOR CLARIFICATION)
2. PLUG–IN BUSWAY STRAIGHT SECTION @ 8'–02" AFF. (SHOWN FOR CLARIFICATION)
3. SUPPORT ASSEMBLY TO SUSPEND BUSWAY FROM CABLE RUNWAY ABOVE. (SHOWN FOR CLARIFICATION)
4. BUSWAY END CAP. (SHOWN FOR CLARIFICATION)

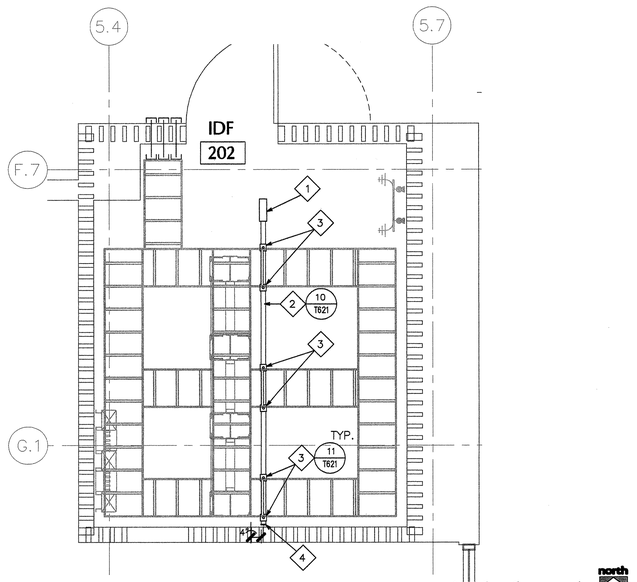

STARLINE ELECTRICAL BUSWAY @ 8'-2" A.F.F. (SHOWN FOR LOCATION-SEE ELECTRICAL DRAWINGS FOR WIRING) | 5

KEY NOTES:

1. 15" C–CHANNEL CABLE RUNWAY @ 7'–02" AFF.
2. SPANNER CLIP KITS TO SECURE CABLE RUNWAY TO DUAL CHANNEL HORIZONTAL SUPPORT SYSTEM. (TYPICAL WHERE RUNWAY CROSSES CHANNEL)
3. SLOTTED RUNWAY SUPPORT KITS USE TO SUPPORT DUAL LEVELS OF CABLE RUNWAY FROM 5/8" THREADED ROD. (TYPICAL)
4. DIAGONAL BRACES TO INSTALLED AS ADDED SUPPORT BETWEEN DUAL LEVELS OF CABLE RUNWAY.
5. RADIUS DOWNTURN TO BE INSTALLED AT ALL INSTANCES WHERE CABLES ENTER OR EXIT THE CABLE RUNWAY AT A 90 DEGREE ANGLE FROM ABOVE OR BELOW. (TYPICAL)
6. HORIZONTAL "T" ASSEMBLY. (TYPICAL AT CABLE RUNWAY INTERSECTIONS)
7. TERMINATION KIT TO BE INSTALLED AT ALL OPEN RUNWAY ENDS. (TYPICAL)

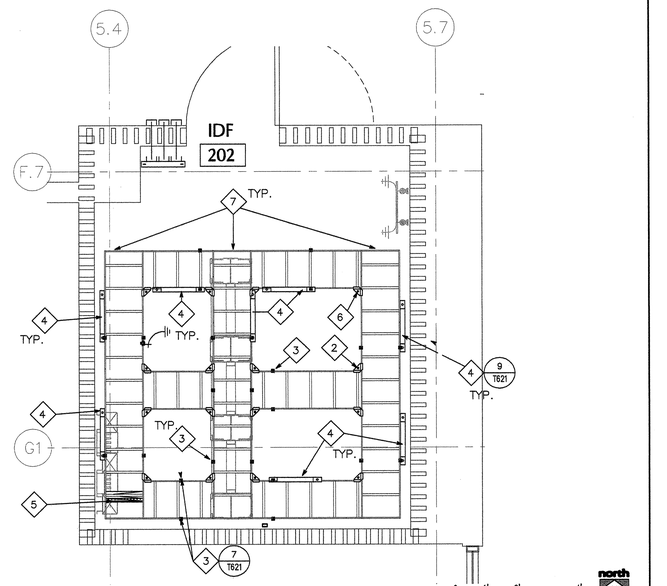

LOWER 15" CABLE RUNWAY @ 7'-2" A.F.F. | 3

KEY NOTES:

1. 188–STYLE VERTICAL CABLE MANAGER FOR 110–BLOCKS. (TYPICAL)
2. 300–PAIR, 110–BLOCKS FOR TERMINATION OF VOICE STATION CABLES. (TYPICAL)
3. 10" DOUBLE SIDED VERTICAL CABLE MANAGER. (TYPICAL)
4. 19"X84" EQUIPMENT RELAY RACK.
5. COPPER GROUND BAR, PROVIDED BY OTHERS.
6. PLYWOOD BACKBOARD @ +0'–06" TO 10'–00" AFF. (TYPICAL)
7. 4" ENTRANCE CONDUITS SLEEVES TO PATHWAYS IN CORRIDOR. (80 SLEEVES @ 9'–00" AFF)

1. AREA BLOCKED OUT FOR CONDUIT SLEEVES FROM IDF ROOM 105 BELOW.
8. PROVIDE 15" VERTICAL CABLE RUNWAY MOUNTED TO THE WALL AT ALL INSTANCE WHERE CONDUITS ENTER OR EXIT THE IDF ROOM IN THE FLOOR SLAB.
9.

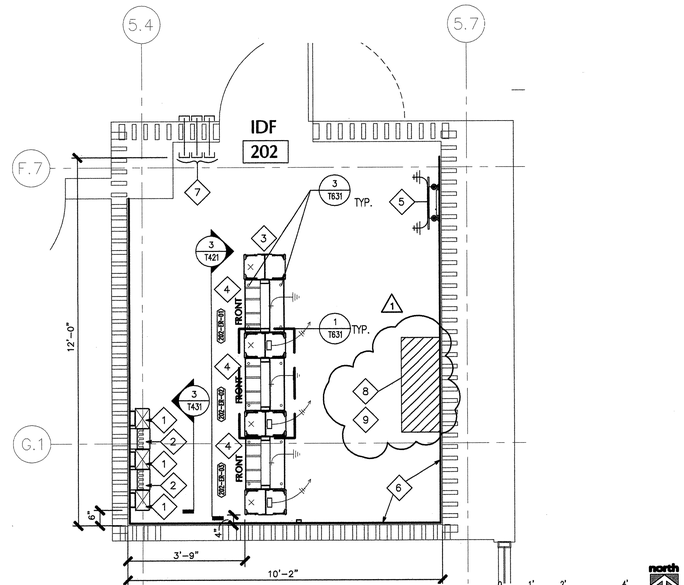

FLOOR PLAN - NORTH | 1

tBP architecture planning interiors management

tBP/architecture
1000 Burnett Ave, Suite 140
Concord, CA 94520
ph: 9252466495 fx: 9252466495

architect

INFRASTRUCTURE DESIGN ASSOCIATES
1440 BROADWAY
SUITE 304 OAKLAND,
CA 94612
PH: (510) 238–8000
FAX: (510) 238–8009
EXPIRES 12/31/04
Regis. No. 04166

consultant

APPROVED
DEPARTMENT OF THE STATE ARCHITECT
OFFICE OF REGULATION SERVICES
APPL NO. 165719
BY: [illegible]
DATE: 6-24-04

agency

SAN RAMON VALLEY CENTER

CONTRA COSTA COMMUNITY COLLEGE DISTRICT

SAN RAMON, CALIFORNIA

owner

tBP project number : 20212.00
file name:
drawn by: IDA checked by:
date: 03–09–04 plot scale: 1:1

Rev:	date:	description:
1	05–26–04	Design Clarification

drawing title: SECOND FLOOR ENLARGED PLANS IDF 202
building no:
drawing no: T3.2.1
drawing of

G:\San Ramon Valley Center\Bid Set\Acad\T321.dwg 5-27-04 11:54:32 AM cmendoza

GENERAL NOTES

A. THE CONTRACTOR IS RESPONSIBLE FOR PROVIDING SEISMIC DESIGN CALCULATIONS AND SEISMIC DESIGN DRAWINGS PREPARED BY THE CONTRACTOR'S CALIFORNIA CERTIFIED STRUCTURAL ENGINEER FOR COORDINATION AND APPROVAL BY THE OWNER'S REPRESENTATIVE PRIOR TO FABRICATING OR INSTALLING ANY SUPPORTS FOR TELECOM EQUIPMENT. ANY PROPOSED REINFORCEMENT TO BE THE RESPONSIBILITY OF THE CONTRACTOR.

B. COORDINATE SEISMIC SUPPORT DESIGN WITH ARCHITECTURAL, STRUCTURAL, MECHANICAL, ELECTRICAL, PLUMBING, FIRE PROTECTION, AND OTHER TRADES.

C. ALL CONDUIT PENETRATIONS THROUGH FIRE–RATED WALLS AND FLOORS SHALL BE SEALED AND EQUIPPED WITH U.L LISTED PENETRATION ASSEMBLIES TO MAINTAIN FIRE SEPARATION RATING.

D. THE CONTRACTOR SHALL VERIFY ALL CRITICAL DIMENSIONS WITH THE ARCHITECTURAL DRAWINGS.

KEY NOTES:

1. 15" C–CHANNEL CABLE RUNWAY @ 8'–09" AFF.
2. SLOTTED RUNWAY SUPPORT KITS USE TO SUPPORT DUAL LEVELS OF CABLE RUNWAY FROM 5/8" THREADED ROD. (TYPICAL)
3. RADIUS DOWNTURN TO BE INSTALLED AT ALL INSTANCES WHERE CABLES ENTER OR EXIT THE CABLE RUNWAY AT A 90 DEGREE ANGLE FROM ABOVE OR BELOW. (TYPICAL)
4. HORIZONTAL "T" ASSEMBLY. (TYPICAL AT CABLE RUNWAY INTERSECTIONS)
5. TERMINATION KIT TO BE INSTALLED AT ALL OPEN RUNWAY ENDS. (TYPICAL)
6. CABLE RUNWAY WALL SUPPORT.

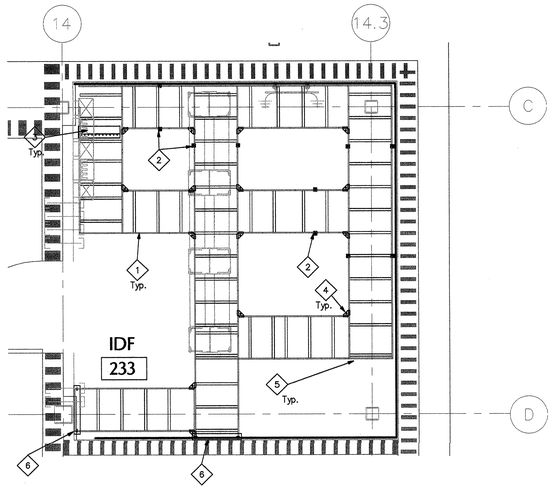

GRAPHIC SCALE: 1/2" = 1'–0"

north

NOTES | 6

KEY NOTES:

1. SUPPORT COLUMN WITH 2"X 79" TUBULAR STEEL SUPPORT. (TYPICAL)
2. DUAL CHANNEL HORIZONTAL SUPPORT CHANNELS @ 6'–10" AFF.
3. DUAL CHANNEL HORIZONTAL SUPPORT CHANNELS @ 7'–00" AFF.
4. DUAL CHANNEL SECTION WITH A RACK–TO–HORIZONTAL SUPPORT CHANNEL ATTACHMENT. (TYPICAL)
5. DUAL CHANNEL CROSS–OVER FRAMING ASSEMBLY WITH 5/8" THREADED ROD.

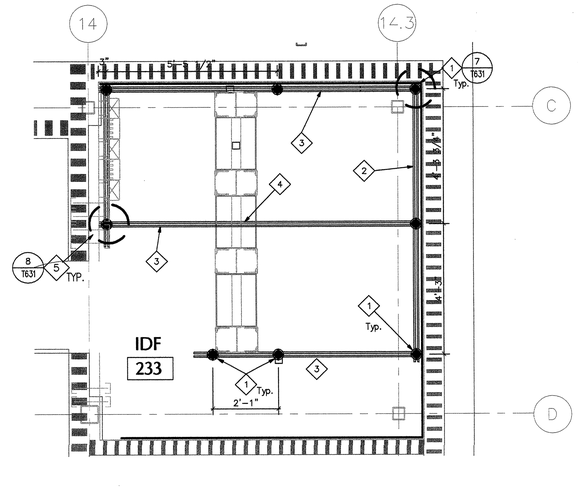

GRAPHIC SCALE: 1/2" = 1'–0"

north

DUAL CHANNEL SUPPORT | 2

KEY NOTES:

1. END POWER FEED UNIT – 60 AMP, 4 POLE WITH GROUND. (SHOWN FOR CLARIFICATION)
2. PLUG–IN BUSWAY STRAIGHT SECTION @ 8'–02" AFF. (SHOWN FOR CLARIFICATION)
3. SUPPORT ASSEMBLY TO SUSPEND BUSWAY FROM CABLE RUNWAY ABOVE. (SHOWN FOR CLARIFICATION)
4. BUSWAY END CAP. (SHOWN FOR CLARIFICATION)

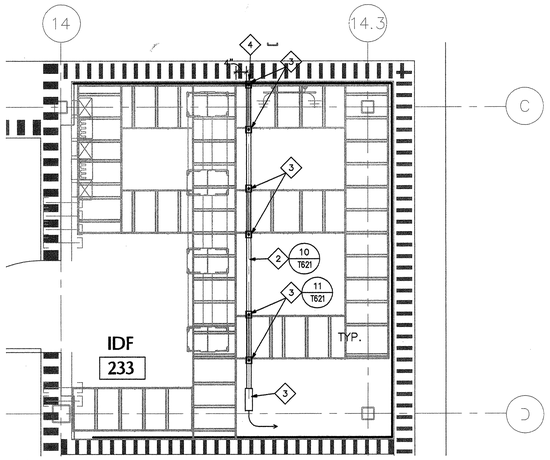

GRAPHIC SCALE: 1/2" = 1'–0"

north

STARLINE ELECTRICAL BUSWAY @ 8'-2" A.F.F. (SHOWN FOR LOCATION-SEE ELECTRICAL DRAWINGS FOR WIRING) | 5

KEY NOTES:

1. 15" C–CHANNEL CABLE RUNWAY @ 7'–02" AFF.
2. SPANNER CLIP KITS TO SECURE CABLE RUNWAY TO DUAL CHANNEL HORIZONTAL SUPPORT SYSTEM. (TYPICAL WHERE RUNWAY CROSSES CHANNEL)
3. SLOTTED RUNWAY SUPPORT KITS USE TO SUPPORT DUAL LEVELS OF CABLE RUNWAY FROM 5/8" THREADED ROD. (TYPICAL)
4. DIAGONAL BRACES TO INSTALLED AS ADDED SUPPORT BETWEEN DUAL LEVELS OF CABLE RUNWAY.
5. RADIUS DOWNTURN TO BE INSTALLED AT ALL INSTANCES WHERE CABLES ENTER OR EXIT THE CABLE RUNWAY AT A 90 DEGREE ANGLE FROM ABOVE OR BELOW. (TYPICAL)
6. HORIZONTAL "T" ASSEMBLY. (TYPICAL AT CABLE RUNWAY INTERSECTIONS)
7. TERMINATION KIT TO BE INSTALLED AT ALL OPEN RUNWAY ENDS. (TYPICAL)

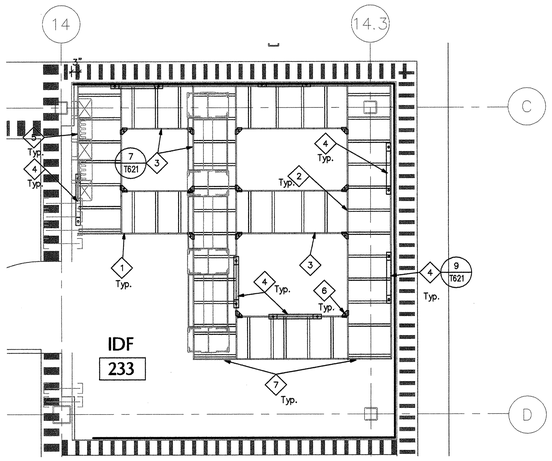

GRAPHIC SCALE: 1/2" = 1'–0"

north

LOWER 15" CABLE RUNWAY @ 7'-02" AFF | 3

KEY NOTES:

1. 188–STYLE VERTICAL CABLE MANAGER FOR 110–BLOCKS. (TYPICAL)
2. 300–PAIR, 110–BLOCKS FOR TERMINATION OF VOICE STATION CABLES. (TYPICAL)
3. 10" DOUBLE SIDED VERTICAL CABLE MANAGER. (TYPICAL)
4. 19"X84" EQUIPMENT RELAY RACK.
5. COPPER GROUND BAR, PROVIDED BY OTHERS.
6. PLYWOOD BACKBOARD @ +0'–06" TO 10'–00" AFF. (TYPICAL)
7. 4" ENTRANCE CONDUITS SLEEVES TO PATHWAYS IN CORRIDOR. (BO SLEEVES @ 9'–00" AFF)
8. AREA BLOCKED OUT FOR CONDUIT SLEEVES FROM ELECTRICAL ROOM 171 BELOW. SEE ELECTRICAL DRAWINGS FOR CONDUIT SIZE AND COUNTS.
9. PROVIDE 15" VERTICAL CABLE RUNWAY MOUNTED TO THE WALL AT ALL INSTANCE WHERE CONDUITS ENTER OR EXIT THE IDF ROOM IN THE FLOOR SLAB. (TYPICAL)

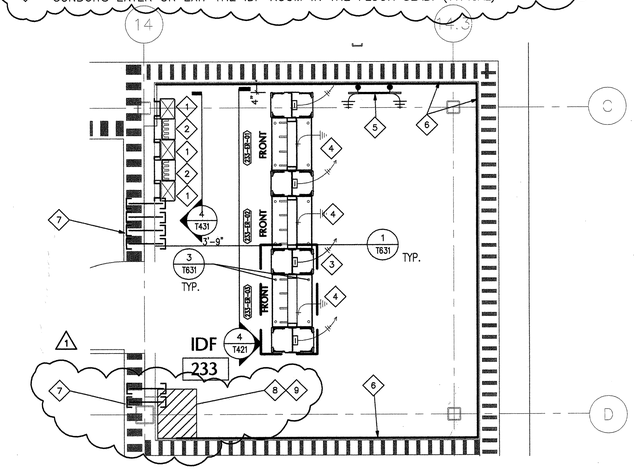

GRAPHIC SCALE: 1/2" = 1'–0"

north

PLAN VIEW | 1

tBP
architecture
planning
interiors
management

tBP/Architecture
1000 Burnett Ave, Suite 140
Concord, CA 94520
ph: 925.246.6495 fx: 925.246.6495

architect

INFRASTRUCTURE DESIGN ASSOCIATES
1440 BROADWAY
SUITE 304 OAKLAND,
CA. 94612
PH: (510) 238–8000
FAX: (510) 238–8009
EXPIRES 12/31/04
Regis. No. 04166

consultant

APPROVED
DIVISION OF THE STATE ARCHITECT
OFFICE OF REGIONAL SERVICES
APPL NO. 105719
BY
DATE 6-7-04

agency

SAN RAMON VALLEY CENTER
CONTRA COSTA COMMUNITY COLLEGE DISTRICT
SAN RAMON, CALIFORNIA

owner

tBP project number :	20212.00
file name:	
drawn by: IDA	checked by:
date: 03–09–04	plot scale: 1:1

Rev:	date:	description:
1	05–26–04	Design Clarification

drawing title: SECOND FLOOR ENLARGED PLAN IDF 233

building no:

drawing no: T3.2.2

drawing of

G:\San Ramon Valley Center\Bid Set\Acad\T322.dwg 5-27-04 11:53:58 AM cmendoza

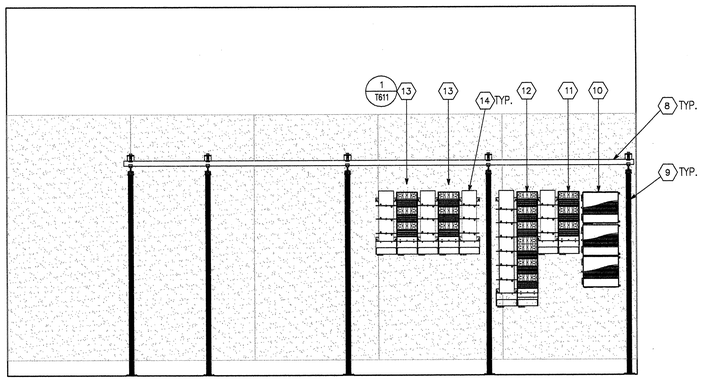

0 6" 1' 2' 4'

MDF 180 - 110 BLOCK FIELD ELEVATIONS 2
SCALE: 1/2" = 1'-0"

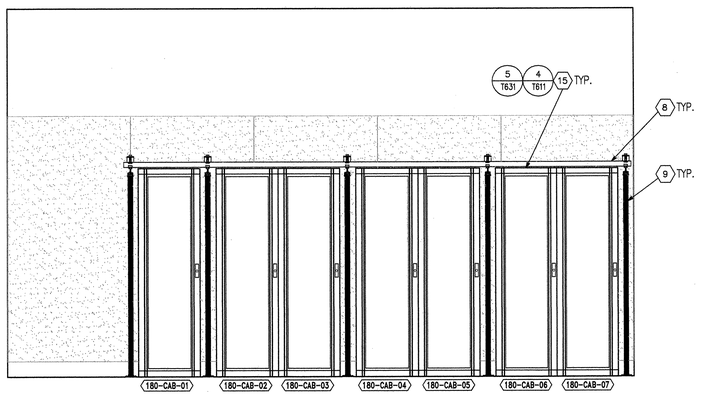

0 6" 1' 2' 4'

MDF 180 - EQUIPMENT CABINET ELEVATIONS 3
SCALE: 1/2" = 1'-0"

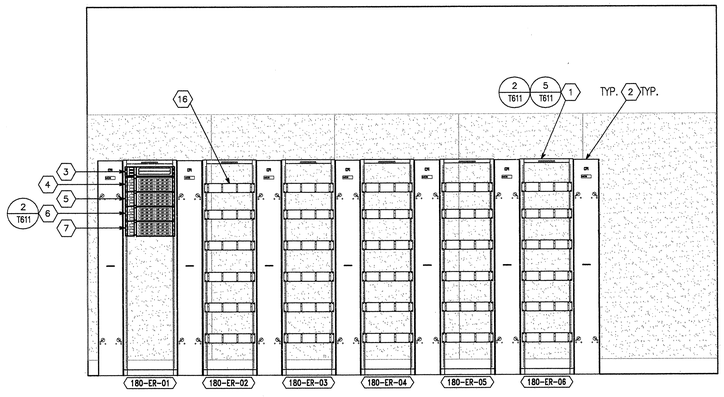

0 6" 1' 2' 4'

MDF 180 - EQUIPMENT RACK ELEVATIONS 1
SCALE: 1/2" = 1'-0"

NOTES

GENERAL NOTES

A. ELEVATION VIEWS SHOWN FOR LOCATING AND LABELING OF TELECOM COPPER AND FIBER OPTIC TERMINATION HARDWARE AND RACK ACCESSORIES ONLY. NOT ALL LAYERS OF CABLE MANAGEMENT SUPPORT DEVICES ARE SHOWN ON ELEVATION VIEWS.

B. THE CONTRACTOR IS RESPONSIBLE FOR PROVIDING SEISMIC DESIGN CALCULATIONS AND SEISMIC DESIGN DRAWINGS PREPARED BY THE CONTRACTOR'S CALIFORNIA CERTIFIED STRUCTURAL ENGINEER FOR COORDINATION AND APPROVAL BY THE OWNER'S REPRESENTATIVE PRIOR TO FABRICATING OR INSTALLING ANY SUPPORTS FOR TELECOM EQUIPMENT. ANY PROPOSED REINFORCEMENT TO BE THE RESPONSIBILITY OF THE CONTRACTOR.

C. COORDINATE SEISMIC SUPPORT DESIGN WITH ARCHITECTURAL, STRUCTURAL, MECHANICAL, ELECTRICAL, PLUMBING, FIRE PROTECTION, AND OTHER TRADES.

D. THE CONTRACTOR SHALL VERIFY ALL CRITICAL DIMENSIONS WITH THE ARCHITECTURAL DRAWINGS.

SHEET NOTES

1. 19' X 84" EQUIPMENT RACK.
2. 10" DOUBLE SIDED VERTICAL CABLE MANAGER.
3. 48-POSITION FIBER OPTIC SPLICE SHELF FOR SPLICING OF 24-STRAND SM FIBER OPTIC CABLE FROM IDF ROOM 105. SHELF LABEL IS SS01.
4. 48-POSITION, FIBER OPTIC TERMINATION SHELF FOR TERMINATION OF 24-STRAND SM FIBER OPTIC CABLE FROM IDF ROOM 105. SHELF LABEL IS FS01.
5. 48-POSITION, FIBER OPTIC TERMINATION SHELF FOR TERMINATION OF 48-STRAND MM FIBER OPTIC CABLE FROM IDF ROOM 105. SHELF LABEL IS FS02.
6. 48-POSITION, FIBER OPTIC TERMINATION SHELF FOR TERMINATION OF 24-STRAND MM FIBER OPTIC CABLE AND 12-STRAND SM FIBER OPTIC CABLE FROM IDF ROOM 189. SHELF LABEL IS FS03.
7. 48-POSITION, FIBER OPTIC TERMINATION SHELF FOR TERMINATION OF 24-STRAND MM FIBER OPTIC CABLE AND 12-STRAND SM FIBER OPTIC CABLE FROM MDF ROOM 233. SHELF LABEL IS FS04.
8. DUAL CHANNEL HORIZONTAL SUPPORT.
9. 2" X 79" TUBULAR STEEL SUPPORT COLUMN.
10. 489 TYPE-MULTIPAIR PROTECTOR PANELS FOR TERMINATION OF COPPER ENTRANCE CABLES FROM IDF ROOM 105.
11. 300-PAIR, 110-BLOCKS FOR TERMINATION OF VOICE RISER BACKBONE CABLES.
12. 600-PAIR, 110-BLOCKS FOR TERMINATION OF PBX SYSTEM TAILS.
13. 300-PAIR, 110-BLOCKS FOR FUTURE COPPER VOICE TERMINATIONS.
14. 188-STYLE VERTICAL CABLE MANAGER FOR 110-BLOCKS.
15. 24W X 36D X 82H EQUIPMENT CABINET.
16. 2U HORIZONTAL CABLE MANAGER

KEY PLAN

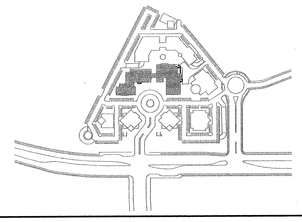

tBP
architecture
planning
interiors
management

LICENSED ARCHITECT ... RICHARD A. MARTINEZ ... NO. C-26685 ... STATE OF CALIFORNIA

LICENSED ARCHITECT ... RICHARD A. MARTINEZ ... NO. C-26685 ... STATE OF CALIFORNIA

tBP/Architecture
1000 Bunnett Ave, Suite 140
Concord, CA 94520
ph: 925.246.6419 fx: 925.246.6495

architect

INFRASTRUCTURE DESIGN ASSOCIATES
1440 BROADWAY
SUITE 304 OAKLAND,
CA. 94612
PH: (510) 238-8000
FAX: (510) 238-8009

REGISTERED COMMUNICATIONS DISTRIBUTION DESIGNER BICSI
EXPIRES 12/31/04
Regis. No. 04166

consultant

IDENTIFICATION STAMP
DIVISION OF THE STATE ARCHITECT
OFFICE OF REGULATION SERVICES
APPL NO. 1107319
FILE
DATE

agency

SAN RAMON VALLEY CENTER
CONTRA COSTA COMMUNITY COLLEGE DISTRICT
SAN RAMON, CALIFORNIA

owner

tBP project number : 20212.00
file name:
drawn by: IDA checked by:
date: 03-09-04 plot scale: 1:1

Rev:	date:	description:

drawing title: building no:
MDF ROOM 180
ELEVATIONS

drawing no:
T4.1.1
drawing of

G:\San Ramon Valley Center\USA\Acad\T4111.dwg 3-05-04 10:41:03 AM amendoza

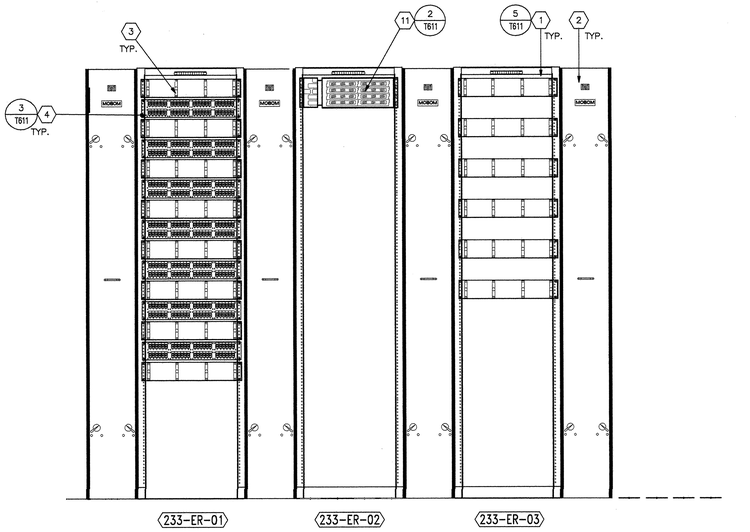

IDF 233 - EQUIPMENT RACK ELEVATIONS SCALE: 1" = 1'-0" 4

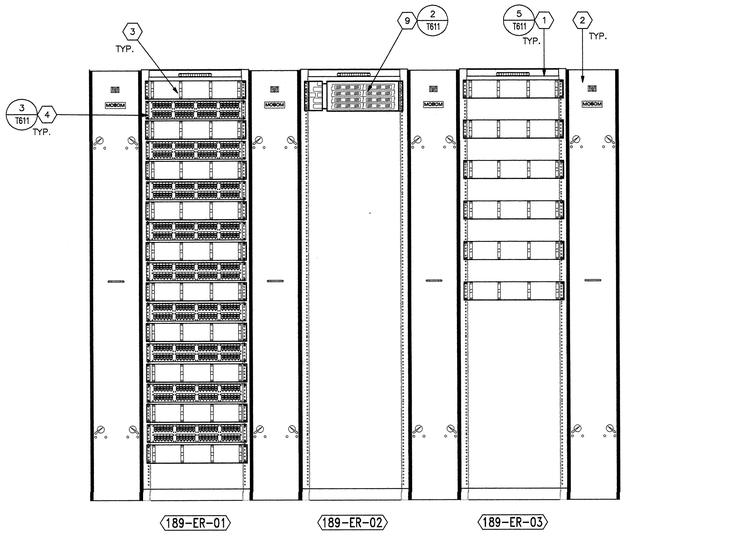

IDF 189 - EQUIPMENT RACK ELEVATIONS SCALE: 1" = 1'-0" 2

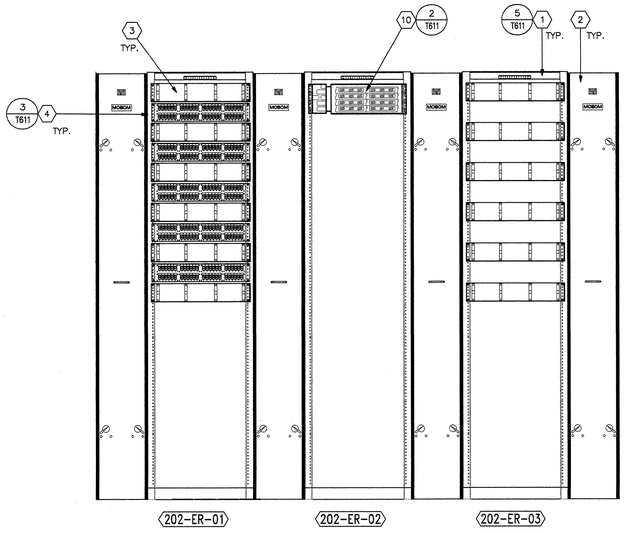

IDF 202 - EQUIPMENT RACK ELEVATIONS SCALE: 1" = 1'-0" 3

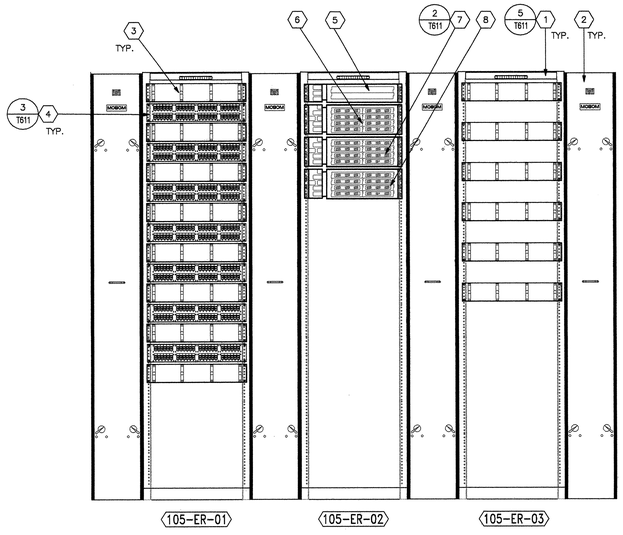

IDF 105 - EQUIPMENT RACK ELEVATIONS SCALE: 1" = 1'-0" 1

NOTES

GENERAL NOTES

A. ELEVATION VIEWS SHOWN FOR LOCATING AND LABELING OF TELECOM COPPER AND FIBER OPTIC TERMINATION HARDWARE AND RACK ACCESSORIES ONLY. NOT ALL LAYERS OF CABLE MANAGEMENT SUPPORT DEVICES ARE SHOWN ON ELEVATION VIEWS.

B. THE CONTRACTOR IS RESPONSIBLE FOR PROVIDING SEISMIC DESIGN CALCULATIONS AND SEISMIC DESIGN DRAWINGS PREPARED BY THE CONTRACTOR'S CALIFORNIA CERTIFIED STRUCTURAL ENGINEER FOR COORDINATION AND APPROVAL BY THE OWNER'S REPRESENTATIVE PRIOR TO FABRICATING OR INSTALLING ANY SUPPORTS FOR TELECOM EQUIPMENT. ANY PROPOSED REINFORCEMENT TO BE THE RESPONSIBILITY OF THE CONTRACTOR.

C. COORDINATE SEISMIC SUPPORT DESIGN WITH ARCHITECTURAL, STRUCTURAL, MECHANICAL, ELECTRICAL, PLUMBING, FIRE PROTECTION, AND OTHER TRADES.

D. THE CONTRACTOR SHALL VERIFY ALL CRITICAL DIMENSIONS WITH THE ARCHITECTURAL DRAWINGS.

SHEET NOTES

1. 19' X 84" EQUIPMENT RACK.
2. 10" DOUBLE SIDED VERTICAL CABLE MANAGER.
3. 2U HORIZONTAL CABLE MANAGER.
4. 48-PORT PATCH PANEL FOR COPPER DATA NETWORK STATION CABLE TERMINATION.
5. 48-POSITION FIBER OPTIC SPLICE SHELF FOR SPLICING OF 24-STRAND SM FIBER OPTIC CABLE FROM MDF ROOM 180. SHELF LABEL IS SS01.
6. 48-POSITION, FIBER OPTIC TERMINATION SHELF FOR TERMINATION OF 24-STRAND SM FIBER OPTIC CABLE FROM MDF ROOM 180. SHELF LABEL IS FS01.
7. 48-POSITION, FIBER OPTIC TERMINATION SHELF FOR TERMINATION OF 48-STRAND MM FIBER OPTIC CABLE FROM MDF ROOM 180. SHELF LABEL IS FS02.
8. 48-POSITION, FIBER OPTIC TERMINATION SHELF FOR TERMINATION OF 24-STRAND MM FIBER OPTIC CABLE AND 12-STRAND SM FIBER OPTIC CABLE FROM IDF ROOM 202. SHELF LABEL IS FS03.
9. 48-POSITION, FIBER OPTIC TERMINATION SHELF FOR TERMINATION OF 24-STRAND MM FIBER OPTIC CABLE AND 12-STRAND SM FIBER OPTIC CABLE FROM MDF ROOM 180. SHELF LABEL IS FS01.
10. 48-POSITION, FIBER OPTIC TERMINATION SHELF FOR TERMINATION OF 24-STRAND MM FIBER OPTIC CABLE AND 12-STRAND SM FIBER OPTIC CABLE FROM IDF ROOM 105. SHELF LABEL IS FS01.
11. 48-POSITION, FIBER OPTIC TERMINATION SHELF FOR TERMINATION OF 24-STRAND MM FIBER OPTIC CABLE AND 12-STRAND SM FIBER OPTIC CABLE FROM MDF ROOM 180. SHELF LABEL IS FS01.

KEY PLAN

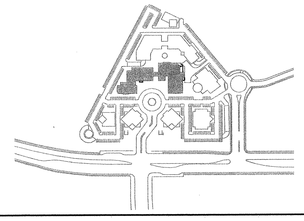

tBP
architecture
planning
interiors
management
LICENSED ARCHITECT RICHARD T. MARION, A.I.A. No. C-18855 STATE OF CALIFORNIA
LICENSED ARCHITECT RICHARD T. MARION, A.I.A. No. C-18855 EXP. 12-31-04 STATE OF CALIFORNIA
tBP/architecture
1000 Burnett Ave, Suite 140
Concord, CA 94520
ph: 925/246.6419 fx: 925/246.6495
architect

INFRASTRUCTURE DESIGN ASSOCIATES
1440 BROADWAY
SUITE 304 OAKLAND,
CA. 94612
PH: (510) 238-8000
FAX: (510) 238-8009
REGISTERED COMMUNICATIONS DISTRIBUTION DESIGNER BICSI
EXPIRES 12/31/04
Regis. No. 04166
consultant

IDENTIFICATION STAMP DIV. OF ARCHITECTURE OFFICE OF REGULATION SERVICES APPL. NO. 105719 AC JUL 15 2004 DATE

agency

SAN RAMON VALLEY CENTER
CONTRA COSTA COMMUNITY COLLEGE DISTRICT
SAN RAMON, CALIFORNIA

owner

tBP project number : 20212.00
file name:
drawn by: IDA checked by:
date: 03-09-04 plot scale: 1:1

Rev:	date:	description:

drawing title: IDF ROOMS EQUIPMENT RACK ELEVATIONS
building no:
drawing no: T4.2.1
drawing of

G:\San Ramon Valley Center\DSA\Acad\T421.dwg 3-05-04 11:05:55 AM cmendoza

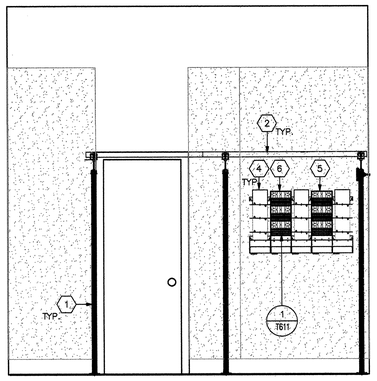

GRAPHIC SCALE: 1/2" = 1'-0"

IDF 233 - 110 BLOCK ELEVATIONS | 4
SCALE: 1" = 1'-0"

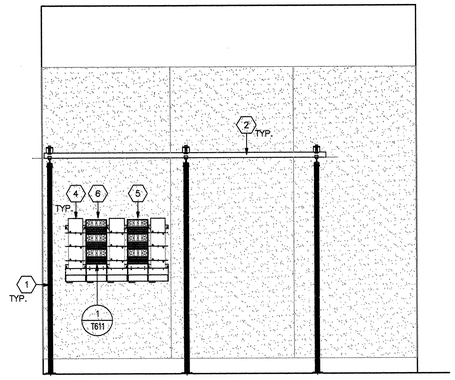

GRAPHIC SCALE: 1/2" = 1'-0"

IDF 189 - 110 BLOCK ELEVATIONS | 2
SCALE: 1" = 1'-0"

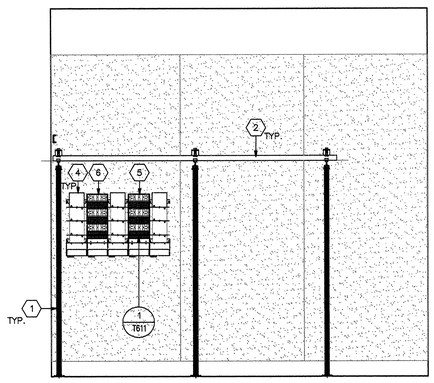

GRAPHIC SCALE: 1/2" = 1'-0"

IDF 202 - 110 BLOCK ELEVATIONS | 3
SCALE: 1" = 1'-0"

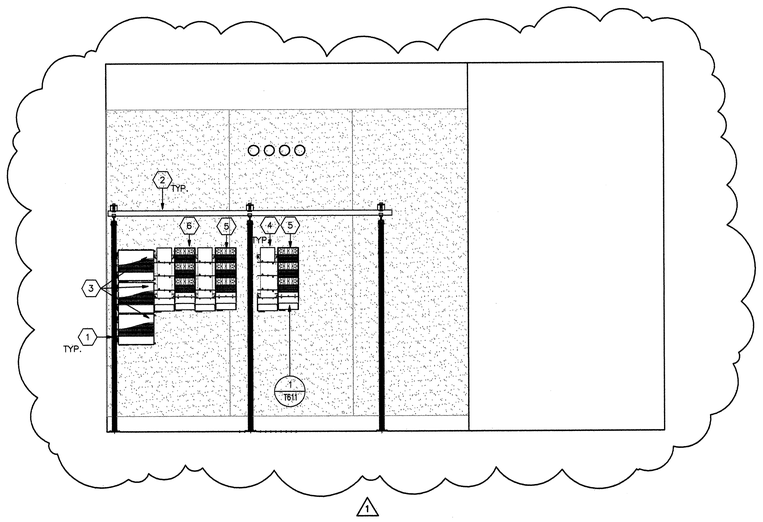

GRAPHIC SCALE: 1/2" = 1'-0"

IDF 105 - 110 BLOCK ELEVATIONS | 1
SCALE: 1" = 1'-0"

NOTES

GENERAL NOTES

A. ELEVATION VIEWS SHOWN FOR LOCATING AND LABELING OF TELECOM COPPER AND FIBER OPTIC TERMINATION HARDWARE AND RACK ACCESSORIES ONLY. NOT ALL LAYERS OF CABLE MANAGEMENT SUPPORT DEVICES ARE SHOWN ON ELEVATION VIEWS.

B. THE CONTRACTOR IS RESPONSIBLE FOR PROVIDING SEISMIC DESIGN CALCULATIONS AND SEISMIC DESIGN DRAWINGS PREPARED BY THE CONTRACTOR'S CALIFORNIA CERTIFIED STRUCTURAL ENGINEER FOR COORDINATION AND APPROVAL BY THE OWNER'S REPRESENTATIVE PRIOR TO FABRICATING OR INSTALLING ANY SUPPORTS FOR TELECOM EQUIPMENT. ANY PROPOSED REINFORCEMENT TO BE THE RESPONSIBILITY OF THE CONTRACTOR.

C. COORDINATE SEISMIC SUPPORT DESIGN WITH ARCHITECTURAL, STRUCTURAL, MECHANICAL, ELECTRICAL, PLUMBING, FIRE PROTECTION, AND OTHER TRADES.

D. THE CONTRACTOR SHALL VERIFY ALL CRITICAL DIMENSIONS WITH THE ARCHITECTURAL DRAWINGS.

SHEET NOTES

1. 2" X 79" TUBULAR STEEL SUPPORT COLUMN.
2. DUAL CHANNEL HORIZONTAL SUPPORT.
3. 489 TYPE-MULTIPAIR PROTECTOR PANELS FOR TERMINATION OF COPPER ENTRANCE CABLES FROM MDF ROOM 180.
4. 188-STYLE VERTICAL CABLE MANAGER FOR 110-BLOCKS.
5. 300-PAIR, 110-BLOCKS FOR COPPER VOICE STATION CABLE TERMINATIONS
6. 300-PAIR, 110-BLOCKS FOR TERMINATION OF VOICE RISER BACKBONE CABLES.

KEY PLAN

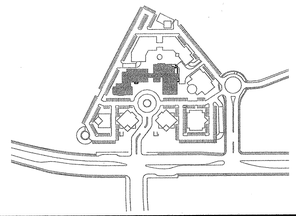

tBP
architecture
planning
interiors
management

tBP/Architecture
1000 Burnett Ave, Suite 140
Concord, CA 94520
ph: 925.246.6419 fx: 925.246.6495

architect

INFRASTRUCTURE DESIGN ASSOCIATES
1440 BROADWAY
SUITE 304 OAKLAND, CA. 94612
PH: (510) 238-8000
FAX: (510) 238-8009
EXPIRES 12/31/04
Regis. No. 04166

consultant

APPROVED
DIV. OF THE STATE ARCHITECT
OFFICE OF REGULATION SERVICES
APPL NO. 105719
AC R.S. 4-5-04
DATE 6-9-04

agency

SAN RAMON VALLEY CENTER

CONTRA COSTA COMMUNITY COLLEGE DISTRICT

SAN RAMON, CALIFORNIA

owner

tBP project number : 20212.00

file name:

drawn by: IDA checked by:

date: 03-09-04 plot scale: 1:1

Rev:	date:	description:
1	05-26-04	Design Clarification

drawing title: building no.:
IDF ROOMS
110-BLOCK
FIELD ELEVATIONS

drawing no.:
T4.3.1
drawing of

G:\San Ramon Valley Center\Bid Set\Acad\T431.dwg 5-27-04 11:53:33 AM cmendoza

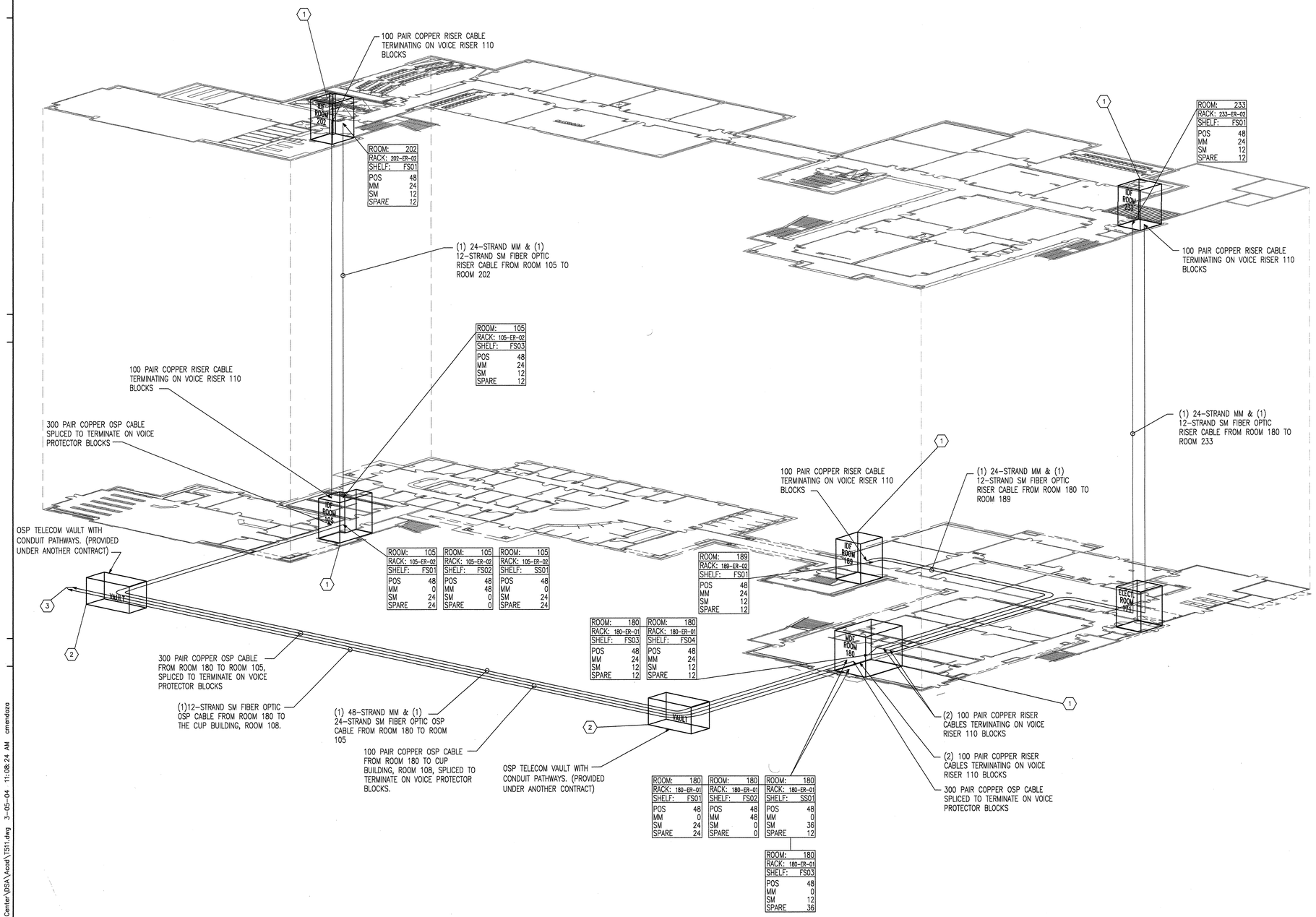

GENERAL NOTES

A. SEE ELECTRICAL DRAWINGS FOR TELECOM PATHWAYS AND VAULTS.

SHEET NOTES

1. PROVIDE 15'–20' SERVICE LOOP FOR FIBER OPTIC CABLE.
2. PROVIDE 20'–30' SERVICE LOOP FOR FIBER OPTIC CABLE AND COPPER BACKBONE CABLE.
3. OSP CABLES FROM MDF ROOM 180 TO CUP BUILDING ROOM 108. SEE ELECTRICAL DRAWINGS FOR TELECOM PATHWAYS AND VAULTS.

KEY PLAN

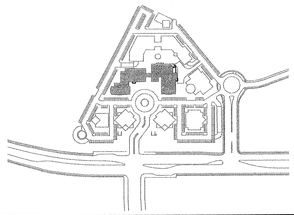

TELECOM OUTSIDE PLANT & RISER DIAGRAM NTS

1

tBP architecture planning interiors management

tBP/architecture
1000 Burnett Ave, Suite 140
Concord, CA 94520
ph: 9252466419 fx: 9252466495

architect

INFRASTRUCTURE DESIGN ASSOCIATES
1440 BROADWAY
SUITE 304 OAKLAND,
CA. 94612
PH: (510) 238-8000
FAX: (510) 238-8009
EXPIRES 12/31/04
Regis. No. 04166

consultant

BUREAUCRATIC STAMP
DIV. OF THE STATE ARCHITECT
OFFICE OF REGULATION SERVICES
APPL NO. 1125119
AC FIRE SS
DATE

agency

SAN RAMON VALLEY CENTER
CONTRA COSTA COMMUNITY COLLEGE DISTRICT
SAN RAMON, CALIFORNIA

owner

tBP project number : 20212.00
file name:
drawn by: IDA checked by:
date: 03-09-04 plot scale: 1:1

Rev:	date:	description:

drawing title: building no:
INTRA BUILDING BACKBONE CABLING DIAGRAM

drawing no:
T5.1.1
drawing of

G:\San Ramon Valley Center\USA\Acad\T511.dwg 3-05-04 11:08:24 AM cmendoza

12 FLOOR BOX RECESSED TRIPLEX - FBRT0600B
(6) NETWORK

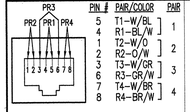

PIN #	PAIR/COLOR	PAIR
5	T1–W/BL	1
4	R1–BL/W	
1	T2–W/O	2
2	R2–O/W	
3	T3–W/GR	3
6	R3–GR/W	
7	T4–W/BR	4
8	R4–BR/W	

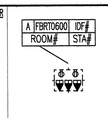

FLOOR BOX RECESSED TRIPLEX
TERMINATION HARDWARE:
(6) 4–PAIR NETWORK STATION CABLES
(6) 8 PIN 8 POSITION NETWORK JACKS

A T568B PINNING

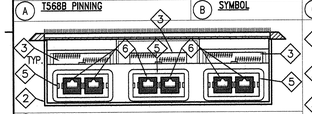

B SYMBOL

D SECTION

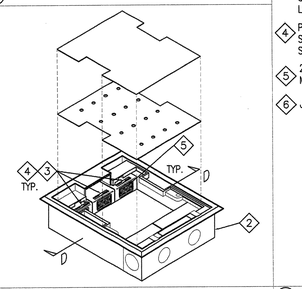

C DESCRIPTION

1. SEE PARTS MATRIX FOR SPECIFIC COLORS, FACEPLATE COMPONENTS, CABLE TYPE, AND PART NUMBERS.
2. RECESSED FLOOR BOX HOUSING ELECTRICAL AND COMMUNICATION DEVICES.
3. OUTLET DESIGNATION SHALL BE ADHERED TO HOLDER. USE 1.8" X 0.375", WHITE POLYESTER LABEL. LABEL SHALL BE LASER PRINTED. USE HELVETICA 10 AS LABELING FONT.
4. PROVIDE LABELING & FACE PLATE IDENTIFICATION AS SPECIFIED IN TELECOM IDENTIFICATION AND LABELING SPEC SECTION.
5. 2 UNIT DUAL OPENING FLUSHMOUNT UNLOADED MODULE FOR MOUNTING TWO JACKS.
6. JACK FOR NETWORK STATION CABLE TERMINATION.

E ISOMETRIC

F NOTES

11 WALL TELEPHONE FACE PLATE - WALL1000B

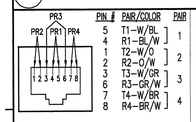

PIN #	PAIR/COLOR	PAIR
5	T1–W/BL	1
4	R1–BL/W	
1	T2–W/O	2
2	R2–O/W	
3	T3–W/GR	3
6	R3–GR/W	
7	T4–W/BR	4
8	R4–BR/W	

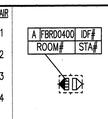

WALL TELEPHONE FACE PLATE
TERMINATION HARDWARE:
(1) 4–PAIR TELEPHONE STATION CABLE.
(1) 8 PIN 8 POSITION TELEPHONE JACK.

A T568B PINNING

B OUTLET SYMBOL

C OUTLET DESCRIPTION

1. WALL PHONE PLATE WITH MOUNTING STUDS
2. PROVIDE LASER PRINTED LABELING AND FACEPLATE IDENTIFICATION AS SPECIFIED IN TELECOM IDENTIFICATION AND AND LABELING SPEC SECTION.
3. OUTLET DESIGNATION SHALL BE ADHERED TO HOLDER USE 1.8"X0.375", WHITE POLYESTER LABEL. LABEL SHALL BE LASER PAINTED. USE HELVETIA 10 AS LABELING FONT
4. JACK FOR TELEPHONE STATION CABLE

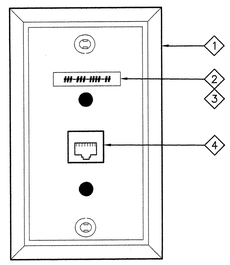

D OUTLET FACEPLATE

E FACEPLATE NOTES

10 FLOOR BOX RECESSED DUPLEX - FBRD0400B FOR CONCRETE RECESSED BOX
(4) NETWORK, (0) MM OPTICAL FIBER, (0) BROADBAND

PIN #	PAIR/COLOR	PAIR
5	T1–W/BL	1
4	R1–BL/W	
1	T2–W/O	2
2	R2–O/W	
3	T3–W/GR	3
6	R3–GR/W	
7	T4–W/BR	4
8	R4–BR/W	

FLOOR BOX RECESSED DUPLEX
TERMINATION HARDWARE:
(4) 4–PAIR NETWORK STATION CABLES
(4) 8 PIN 8 POSITION NETWORK JACKS

A T568B PINNING

B SYMBOL

C DESCRIPTION

1. SEE PARTS MATRIX FOR SPECIFIC COLORS, FACEPLATE CONNECTIVITY COMPONENTS, CABLE TYPE, AND PART NUMBERS.
2. HIGH CAPACITY CONCRETE RECESSED FLOOR BOX.
3. OUTLET DESIGNATION SHALL BE ADHERED TO HOLDER. USE 1.8" X 0.375", WHITE POLYESTER LABEL. LABEL SHALL BE LASER PRINTED. USE HELVETICA 10 AS LABELING FONT.
4. PROVIDE LABELING & FACE PLATE IDENTIFICATION AS SPECIFIED IN TELECOM IDENTIFICATION AND LABELING SPEC SECTION.
5. 2 UNIT DUAL OPENING FLUSHMOUNT UNLOADED MODULE FOR MOUNTING TWO JACKS.
6. 2 UNIT BLANK MODULE, TO FILL UNUSED OPENINGS.
7. JACK FOR TELEPHONE STATION CABLE TERMINATION.
8. JACK FOR NETWORK STATION CABLE TERMINATION.

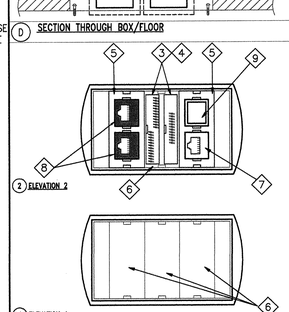

D SECTION THROUGH BOX/FLOOR

2 ELEVATION 2

1 ELEVATION 1

E ELEVATIONS

F NOTES

9 WALL BOX FLUSH DOUBLE GANG ANGLED FACEPLATE - WBFD1200B
(1) TELEPHONE, (1) NETWORK, (1) MM OPTICAL FIBER, (1) BROADBAND

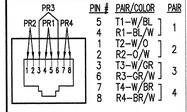

PIN #	PAIR/COLOR	PAIR
5	T1–W/BL	1
4	R1–BL/W	
1	T2–W/O	2
2	R2–O/W	
3	T3–W/GR	3
6	R3–GR/W	
7	T4–W/BR	4
8	R4–BR/W	

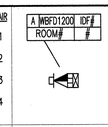

FLOOR BOX RECESSED DUPLEX
TERMINATION HARDWARE:
(1) 4–PAIR TELEPHONE STATION CABLE
(1) 8 PIN 8 POSITION TELEPHONE JACK
(2) 4–PAIR NETWORK STATION CABLES
(2) 8 PIN 8 POSITION NETWORK JACKS

A T568B PINNING

B SYMBOL

C DESCRIPTION

1. SEE PARTS MATRIX FOR SPECIFIC COLORS, FACEPLATE CONNECTIVITY COMPONENTS, CABLE TYPE, AND PART NUMBERS.
2. HIGH CAPACITY CONCRETE RECESSED FLOOR BOX.
3. OUTLET DESIGNATION SHALL BE ADHERED TO HOLDER. USE 1.8" X 0.375", WHITE POLYESTER LABEL. LABEL SHALL BE LASER PRINTED. USE HELVETICA 10 AS LABELING FONT.
4. PROVIDE LABELING & FACE PLATE IDENTIFICATION AS SPECIFIED IN TELECOM IDENTIFICATION AND LABELING SPEC SECTION.
5. 2 UNIT DUAL OPENING FLUSHMOUNT UNLOADED MODULE FOR MOUNTING TWO JACKS.
6. 2 UNIT BLANK MODULE, TO FILL UNUSED OPENINGS.
7. JACK FOR TELEPHONE STATION CABLE TERMINATION.
8. JACK FOR NETWORK STATION CABLE TERMINATION.
9. BLANK JACK HOLDER INSERT.

D SECTION THROUGH BOX/FLOOR

2 ELEVATION 2

E ELEVATIONS

F NOTES

8 FLOOR BOX RECESSED DUPLEX - FBRD1200B FOR CONCRETE RECESSED BOX
(1) TELEPHONE, (2) NETWORK, (0) MM OPTICAL FIBER, (0) BROADBAND

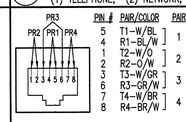

PIN #	PAIR/COLOR	PAIR
5	T1–W/BL	1
4	R1–BL/W	
1	T2–W/O	2
2	R2–O/W	
3	T3–W/GR	3
6	R3–GR/W	
7	T4–W/BR	4
8	R4–BR/W	

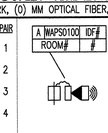

WIRELESS ACCESS POINT
TERMINATION HARDWARE:
(1) 4–PAIR NETWORK STATION CABLES
(1) 8 PIN 8 POSITION NETWORK JACKS

A T568B PINNING

B SYMBOL

C DESCRIPTION

1. SEE PARTS MATRIX FOR SPECIFIC COLORS, FACEPLATE COMPONENTS, CABLE TYPE, AND PART NUMBERS.
2. SINGLE GANG FACEPLATE WITH TWO OUTLET IDENTIFICATION LABELS WITH CLEAR COVERS, ONE MATCHING SCREW COVER AND MOUNITNG SCREWS.
3. CLEAR DESIGNATION STRIP HOLDER. OUTLET DESIGNATION SHALL BE PLACED BEHIND HOLDER AND SHALL NOT BE ADHERED TO HOLDER. USE 1.8" X 0.375", WHITE POLYESTER LABEL. LABEL SHALL BE LASER PRINTED. USE HELVETICA 10 AS LABELING FONT.
4. PROVIDE LABELING & FACE PLATE IDENTIFICATION AS SPECIFIED IN TELECOM IDENTIFICATION AND LABELING SPEC SECTION.
5. 2 UNIT DUAL OPENING FLUSHMOUNT UNLOADED MODULE FOR MOUNTING TWO JACKS.
6. 2 UNIT BLANK MODULE, TO FILL UNUSED OPENINGS.
7. 8 PIN 8 POS JACK FOR TELEPHONE STATION CABLE TERMINATION.
8. BLANK JACK TO FILL UNUSED OPENING

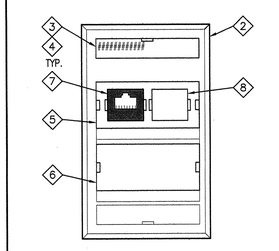

D FACEPLATE

E NOTES

7 WIRELESS ACCESS POINT SINGLE GANG FACEPLATE - WAPS0100B
(1) NETWORK

6 RACEWAY ALUMINUM DUAL CHANNEL - RALD0400B
(0) TELEPHONE, (4) NETWORK, (0) MM OPTICAL FIBER, (0) BROADBAND

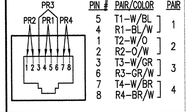

PIN #	PAIR/COLOR	PAIR
5	T1–W/BL	1
4	R1–BL/W	
1	T2–W/O	2
2	R2–O/W	
3	T3–W/GR	3
6	R3–GR/W	
7	T4–W/BR	4
8	R4–BR/W	

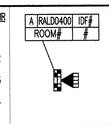

RACEWAY ALUMINUM DUAL CHANNEL
TERMINATION HARDWARE:
(4) 4–PAIR NETWORK STATION CABLES
(4) 8 PIN 8 POSITION NETWORK JACKS

A T568B PINNING

B SYMBOL

C DESCRIPTION

1. SEE PARTS MATRIX FOR SPECIFIC COLORS, FACEPLATE COMPONENTS, CABLE TYPE, AND PART NUMBERS.
2. LOW PROFILE BEZEL IN ALUMINUM RACEWAY COVER WITH TWO OUTLET IDENTIFICATION LABELS WITH CLEAR COVERS.
3. CLEAR DESIGNATION STRIP HOLDER. OUTLET DESIGNATION SHALL BE PLACED BEHIND HOLDER AND SHALL NOT BE ADHERED TO HOLDER. USE 1.8" X 0.375", WHITE POLYESTER LABEL. LABEL SHALL BE LASER PRINTED. USE HELVETICA 10 AS LABELING FONT.
4. PROVIDE LABELING & FACE PLATE IDENTIFICATION AS SPECIFIED IN TELECOM IDENTIFICATION AND LABELING SPEC SECTION.
5. 2 UNIT DUAL OPENING FLUSHMOUNT UNLOADED MODULE FOR MOUNTING TWO JACKS.
6. 2 UNIT BLANK MODULE, TO FILL UNUSED OPENINGS.
7. JACK FOR NETWORK STATION CABLE TERMINATION.

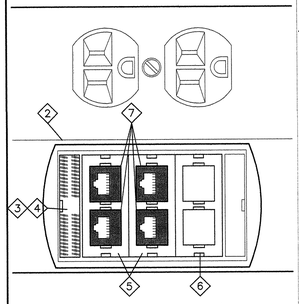

D FACEPLATE

E NOTES

5 TABLE TOP FLUSH - TBTF0200
(2) NETWORK

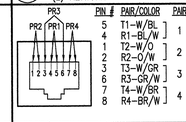

PIN #	PAIR/COLOR	PAIR
5	T1–W/BL	1
4	R1–BL/W	
1	T2–W/O	2
2	R2–O/W	
3	T3–W/GR	3
6	R3–GR/W	
7	T4–W/BR	4
8	R4–BR/W	

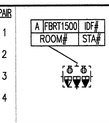

FLOOR BOX RECESSED TRIPLEX
TERMINATION HARDWARE:
(1) 4–PAIR TELEPHONE STATION CABLE
(1) 8 PIN 8 POSITION NETWORK JACKS
(5) 4–PAIR NETWORK STATION CABLES
(5) 8 PIN 8 POSITION NETWORK JACKS

A T568B PINNING

B SYMBOL

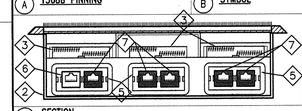

D SECTION

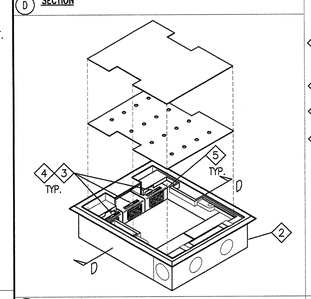

C DESCRIPTION

1. SEE PARTS MATRIX FOR SPECIFIC COLORS, FACEPLATE COMPONENTS, CABLE TYPE AND PART NUMBERS.
2. RECESSED FLOOR BOX HOUSING ELECTRICAL AND COMMUNICATION DEVICES.
3. OUTLET DESIGNATION SHALL BE ADHERED TO HOLDER. USE 1.8" X 0.375", WHITE POLYESTER LABEL. LABEL SHALL BE LASER PRINTED. USE HELVETICA 10 AS LABELING FONT.
4. PROVIDE LABELING & FACE PLATE IDENTIFICATION AS SPECIFIED IN TELECOM IDENTIFICATION AND LABELING SPEC SECTION.
5. 2 UNIT DUAL OPENING FLUSHMOUNT UNLOADED MODULE FOR MOUNTING TWO JACKS.
6. JACK FOR TELEPHONE STATION CABLE TERMINATION.
7. JACK FOR NETWORK STATION CABLE TERMINATION.

E ISOMETRIC

F NOTES

4 FLOOR BOX RECESSED TRIPLEX - FBRT1500B
1) TELEPHONE, (5) NETWORK, (0) MM OPTICAL FIBER, (0) BROADBAND

3 FLOOR BOX RECESSED TRIPLEX - FBRT0400B
0) TELEPHONE, (4) NETWORK, (0) MM OPTICAL FIBER, (0) BROADBAND

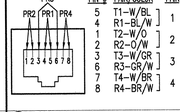

PIN #	PAIR/COLOR	PAIR
5	T1–W/BL	1
4	R1–BL/W	
1	T2–W/O	2
2	R2–O/W	
3	T3–W/GR	3
6	R3–GR/W	
7	T4–W/BR	4
8	R4–BR/W	

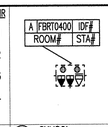

FLOOR BOX RECESSED TRIPLEX
TERMINATION HARDWARE:
(4) 4–PAIR NETWORK STATION CABLES
(4) 8 PIN 8 POSITION NETWORK JACKS

A T568B PINNING

B SYMBOL

C DESCRIPTION

1. SEE PARTS MATRIX FOR SPECIFIC COLORS, FACEPLATE COMPONENTS, CABLE TYPE AND PART NUMBERS.
2. RECESSED FLOOR BOX HOUSING ELECTRICAL AND COMMUNICATION DEVICES.
3. OUTLET DESIGNATION SHALL BE ADHERED TO HOLDER. USE 1.8" X 0.375", WHITE POLYESTER LABEL. LABEL SHALL BE LASER PRINTED. USE HELVETICA 10 AS LABELING FONT.
4. PROVIDE LABELING & FACE PLATE IDENTIFICATION AS SPECIFIED IN TELECOM IDENTIFICATION AND LABELING SPEC SECTION.
5. 2 UNIT DUAL OPENING FLUSHMOUNT UNLOADED MODULE FOR MOUNTING TWO JACKS.
6. 2 UNIT BLANK MODULE, TO FILL UNUSED OPENINGS.
7. JACK FOR NETWORK STATION CABLE TERMINATION.

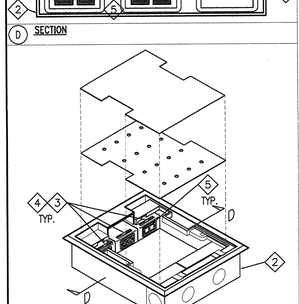

D SECTION

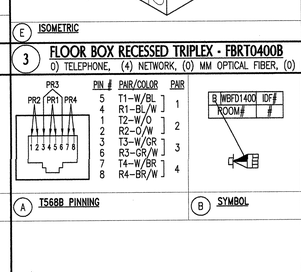

E ISOMETRIC

F NOTES

2 WALL BOX FLUSH DOUBLE GANG ANGLED FACEPLATE - WBFD1400B
(1) TELEPHONE, (4) NETWORK

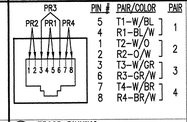

PIN #	PAIR/COLOR	PAIR
5	T1–W/BL	1
4	R1–BL/W	
1	T2–W/O	2
2	R2–O/W	
3	T3–W/GR	3
6	R3–GR/W	
7	T4–W/BR	4
8	R4–BR/W	

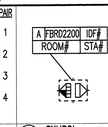

FLOOR BOX RECESSED DUPLEX
TERMINATION HARDWARE:
(2) 4–PAIR TELEPHONE STATION CABLE
(2) 8 PIN 8 POSITION TELEPHONE JACK
(2) 4–PAIR NETWORK STATION CABLES
(2) 8 PIN 8 POSITION NETWORK JACKS

A T568B PINNING

B SYMBOL

C DESCRIPTION

1. SEE PARTS MATRIX FOR SPECIFIC COLORS, FACEPLATE CONNECTIVITY COMPONENTS, CABLE TYPE, AND PART NUMBERS.
2. HIGH CAPACITY CONCRETE RECESSED FLOOR BOX.
3. OUTLET DESIGNATION SHALL BE ADHERED TO HOLDER. USE 1.8" X 0.375", WHITE POLYESTER LABEL. LABEL SHALL BE LASER PRINTED. USE HELVETICA 10 AS LABELING FONT.
4. PROVIDE LABELING & FACE PLATE IDENTIFICATION AS SPECIFIED IN TELECOM IDENTIFICATION AND LABELING SPEC SECTION.
5. 2 UNIT DUAL OPENING FLUSHMOUNT UNLOADED MODULE FOR MOUNTING TWO JACKS.
6. 2 UNIT BLANK MODULE, TO FILL UNUSED OPENINGS.
7. JACK FOR TELEPHONE STATION CABLE TERMINATION.
8. JACK FOR NETWORK STATION CABLE TERMINATION.

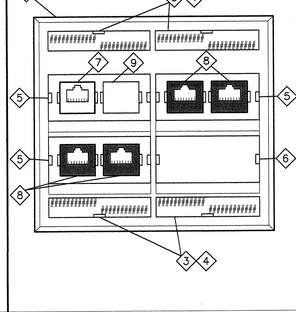

D SECTION THROUGH BOX/FLOOR

E ELEVATIONS

F NOTES

1 FLOOR BOX RECESSED DUPLEX - FBRD2200B FOR CONCRETE RECESSED BOX
(2) TELEPHONE, (2) NETWORK, (0) MM OPTICAL FIBER, (0) BROADBAND

tBP
architecture
planning
interiors
management

tBP/architecture
1000 Burnett Ave, Suite 140
Concord, CA 94520
ph: 9252466419 fx: 9252466495

architect

INFRASTRUCTURE DESIGN ASSOCIATES
1440 BROADWAY
SUITE 304 OAKLAND,
CA 94612
PH: (510) 238–8000
FAX: (510) 238–8009

EXPIRES 12/31/04
Regis. No. 04166

consultant

APPROVED
BERKELEY/ALAMEDA COUNTY
OFFICE OF REGULATION SERVICES
APPL # 10719
ACME FIRE DEPT
UNIT

agency

SAN RAMON VALLEY CENTER
CONTRA COSTA COMMUNITY COLLEGE DISTRICT
SAN RAMON, CALIFORNIA

owner

tBP project number : 20212.00
file name:
drawn by: IDA checked by:
date: 03–09–04 plot scale: 1:1

Rev:	date:	description:
1	05–26–04	Design Clarification

drawing title: TELECOM OUTLET DETAILS
building no:
drawing no: T6.0.1
drawing of

G:\San Ramon Valley Center\Bid Set\Acad\T601.dwg 5–27–04 01:49:22 PM cmendoza

6 FLOOR BOX RECESSED TRIPLEX - FBRT2400B
2) TELEPHONE, (4) NETWORK

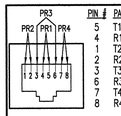

PIN #	PAIR/COLOR	PAIR
5	T1-W/BL	1
4	R1-BL/W	
1	T2-W/O	2
2	R2-O/W	
3	T3-W/GR	3
6	R3-GR/W	
7	T4-W/BR	4
8	R4-BR/W	

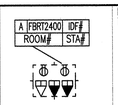

FLOOR BOX RECESSED TRIPLEX
TERMINATION HARDWARE:
(2) 4-PAIR TELEPHONE STATION CABLE
(2) 8 PIN 8 POSITION TELEPHONE JACK
(4) 4-PAIR NETWORK STATION CABLES
(4) 8 PIN 8 POSITION NETWORK JACKS

A T568B PINNING | B SYMBOL | C DESCRIPTION

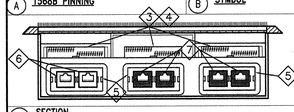

1. SEE PARTS MATRIX FOR SPECIFIC COLORS, FACEPLATE AND CONNECTIVITY COMPONENTS, CABLE TYPE, AND PART NUMBERS.
2. BOX DESCRIPTION HERE... RECESSED FLOOR BOX HOUSING ELECTRICAL AND COMMUNICATION DEVICES.
3. OUTLET SHALL BE ADHERED TO HOLDER. USE 1.8" X 0.375", WHITE POLYESTER LABEL. LABEL SHALL BE LASER PRINTED. USE HELVETICA 10 AS LABELING FONT.
4. PROVIDE LABELING & FACE PLATE IDENTIFICATION AS SPECIFIED IN TELECOM IDENTIFICATION AND LABELING SPEC SECTION.
5. 2 UNIT DUAL OPENING FLUSHMOUNT UNLOADED MODULE FOR MOUNTING TWO JACKS.
6. JACK FOR TELEPHONE STATION CABLE TERMINATION.
7. JACK FOR NETWORK STATION CABLE TERMINATION.

D SECTION

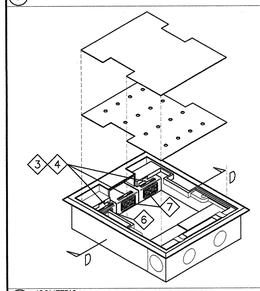

E ISOMETRIC | F NOTES

3 WALL BOX FLUSH DOUBLE GANG ANGLED FACEPLATE - WBFD2400
(2) TELEPHONE, (4) NETWORK

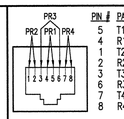

PIN #	PAIR/COLOR	PAIR
5	T1-W/BL	1
4	R1-BL/W	
1	T2-W/O	2
2	R2-O/W	
3	T3-W/GR	3
6	R3-GR/W	
7	T4-W/BR	4
8	R4-BR/W	

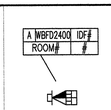

WALL BOX FLUSH DOUBLE GANG
TERMINATION HARDWARE:
(2) 4-PAIR TELEPHONE STATION CABLE
(2) 8 PIN 8 POSITION TELEPHONE JACK
(4) 4-PAIR NETWORK STATION CABLES
(4) 8 PIN 8 POSITION NETWORK JACKS

A T568B PINNING | B SYMBOL | C DESCRIPTION

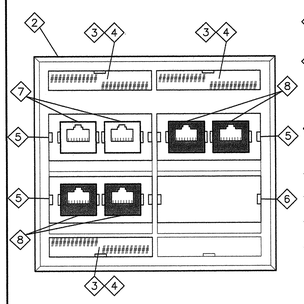

1. SEE PARTS MATRIX FOR SPECIFIC COLORS, FACEPLATE AND CONNECTIVITY COMPONENTS, CABLE TYPE, AND PART NUMBERS.
2. DOUBLE GANG FACEPLATE WITH FOUR OUTLET IDENTIFICATION LABELS WITH CLEAR COVERS, TWO MATCHING SCREW COVERS AND MOUNTING SCREWS.
3. CLEAR DESIGNATION STRIP HOLDER. OUTLET DESIGNATION SHALL BE PLACED BEHIND HOLDER AND SHALL NOT BE ADHERED TO HOLDER. USE 1.8" X 0.375", WHITE POLYESTER LABEL. LABEL SHALL BE LASER PRINTED. USE HELVETICA 10 AS LABELING FONT.
4. PROVIDE LABELING & FACE PLATE IDENTIFICATION AS SPECIFIED IN TELECOM IDENTIFICATION AND LABELING SPEC SECTION.
5. 2 UNIT DUAL OPENING FLUSHMOUNT UNLOADED MODULE FOR MOUNTING TWO JACKS.
6. 2 UNIT BLANK MODULE, TO FILL UNUSED OPENINGS.
7. 8 PIN 8 POS JACK FOR TELEPHONE STATION CABLE TERMINATION.
8. 8 PIN 8 POS JACK FOR NETWORK STATION CABLE TERMINATION.

D FACEPLATE | E NOTES

5 TABLE TOP SURFACE MODULE - TBTS0200B
(2) NETWORK

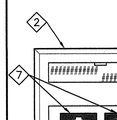

PIN #	PAIR/COLOR	PAIR
5	T1-W/BL	1
4	R1-BL/W	
1	T2-W/O	2
2	R2-O/W	
3	T3-W/GR	3
6	R3-GR/W	
7	T4-W/BR	4
8	R4-BR/W	

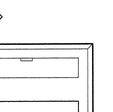

TABLE-TOP SURFACE MODULE
TERMINATION HARDWARE:
(2) 4-PAIR NETWORK STATION CABLES
(2) 8 PIN 8 POSITION NETWORK JACKS

A T568B PINNING | B SYMBOL | C DESCRIPTION

1. SEE PARTS MATRIX FOR SPECIFIC COLORS, FACEPLATE CONNECTIVITY COMPONENTS, CABLE TYPE, AND PART NUMBERS.
2. TABLE-TOP POWER AND NETWORK MODULE. WIREMOLD 'TABLESOURCE' SERIES.
3. OUTLET DESIGNATION SHALL BE ADHERED TO PEDESTAL. USE 1.0" X 0.375", WHITE POLYESTER ADHESIVE LABEL. LABEL SHALL BE LASER PRINTED. USE HELVETICA 10 AS LABELING FONT.
4. PROVIDE LABELING & FACE PLATE IDENTIFICATION AS SPECIFIED IN SPECIFICATION SECTION – TELECOM IDENTIFICATION AND LABELING.
5. POWER RECEPTACLE.
6. TABLE-TOP SURFACE. VERIFY MOUNTING LOCATION WITH OWNER'S REPRESENTATIVE.
7. DUAL OPENING FLUSHMOUNT UNLOADED MODULE FOR MOUNTING TWO NETWORK JACKS.
8. JACK FOR NETWORK STATION CABLE TERMINATION.

D FACEPLATE | E NOTES

4 WALL BOX FLUSH DOUBLE GANG ANGLED FACEPLATE - WBFD0200B
(0) TELEPHONE, (2) NETWORK, (0) MM OPTICAL FIBER, (0) BROADBAND

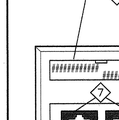

PIN #	PAIR/COLOR	PAIR
5	T1-W/BL	1
4	R1-BL/W	
1	T2-W/O	2
2	R2-O/W	
3	T3-W/GR	3
6	R3-GR/W	
7	T4-W/BR	4
8	R4-BR/W	

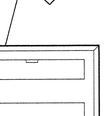

WALL BOX FLUSH DOUBLE GANG
TERMINATION HARDWARE:
(2) 4-PAIR NETWORK STATION CABLES
(2) 8 PIN 8 POSITION NETWORK JACKS

A T568B PINNING | B SYMBOL | C DESCRIPTION

1. SEE PARTS MATRIX FOR SPECIFIC COLORS, FACEPLATE AND CONNECTIVITY COMPONENTS, CABLE TYPE, AND PART NUMBERS.
2. DOUBLE GANG FACEPLATE WITH FOUR OUTLET IDENTIFICATION LABELS WITH CLEAR COVERS, TWO MATCHING SCREW COVERS AND MOUNTING SCREWS.
3. CLEAR DESIGNATION STRIP HOLDER. OUTLET DESIGNATION SHALL BE PLACED BEHIND HOLDER AND SHALL NOT BE ADHERED TO HOLDER. USE 1.8" X 0.375", WHITE POLYESTER LABEL. LABEL SHALL BE LASER PRINTED. USE HELVETICA 10 AS LABELING FONT.
4. PROVIDE LABELING & FACE PLATE IDENTIFICATION AS SPECIFIED IN TELECOM IDENTIFICATION AND LABELING SPEC SECTION.
5. 2 UNIT DUAL OPENING FLUSHMOUNT UNLOADED MODULE FOR MOUNTING TWO JACKS.
6. 2 UNIT BLANK MODULE, TO FILL UNUSED OPENINGS.
7. 8 PIN 8 POS JACK FOR TELEPHONE STATION CABLE TERMINATION.

D FACEPLATE | E NOTES

7 FLOOR BOX RECESSED TRIPLEX - FBRT0800B
0) TELEPHONE, (8) NETWORK, (0) MM OPTICAL FIBER, (0) BROADBAND

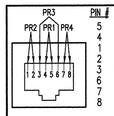

PIN #	PAIR/COLOR	PAIR
5	T1-W/BL	1
4	R1-BL/W	
1	T2-W/O	2
2	R2-O/W	
3	T3-W/GR	3
6	R3-GR/W	
7	T4-W/BR	4
8	R4-BR/W	

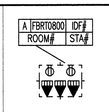

FLOOR BOX RECESSED TRIPLEX
TERMINATION HARDWARE:
(8) 4-PAIR NETWORK STATION CABLES
(8) 8 PIN 8 POSITION NETWORK JACKS

A T568B PINNING TYP. 4 3 TYP. | B SYMBOL | C DESCRIPTION

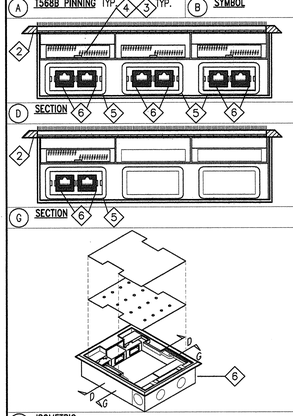

1. SEE PARTS MATRIX FOR SPECIFIC COLORS, FACEPLATE AND CONNECTIVITY COMPONENTS, CABLE TYPE, AND PART NUMBERS.
2. RECESSED FLOOR BOX FOR HOUSING ELECTRICAL AND COMMUNICATION DEVICES.
3. OUTLET SHALL BE PLACED BEHIND HOLDER AND SHALL BE ADHERED TO HOLDER. USE 1.8" X 0.375", WHITE POLYESTER LABEL. LABEL SHALL BE LASER PRINTED. USE HELVETICA 10 AS LABELING FONT.
4. PROVIDE LABELING & FACE PLATE IDENTIFICATION AS SPECIFIED IN TELECOM IDENTIFICATION AND LABELING SPEC SECTION.
5. 2 UNIT DUAL OPENING FLUSHMOUNT UNLOADED MODULE FOR MOUNTING TWO JACKS.
6. JACK FOR NETWORK STATION CABLE TERMINATION.

D SECTION

G SECTION

E ISOMETRIC | F NOTES

1 WALL BOX FLUSH DOUBLE GANG ANGLED FACEPLATE - WBFD0400B
(0) TELEPHONE, (4) NETWORK, (0) MM OPTICAL FIBER, (0) BROADBAND

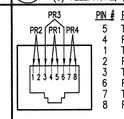

PIN #	PAIR/COLOR	PAIR
5	T1-W/BL	1
4	R1-BL/W	
1	T2-W/O	2
2	R2-O/W	
3	T3-W/GR	3
6	R3-GR/W	
7	T4-W/BR	4
8	R4-BR/W	

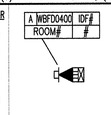

WALL BOX FLUSH DOUBLE GANG
TERMINATION HARDWARE:
(4) 4-PAIR NETWORK STATION CABLES
(4) 8 PIN 8 POSITION NETWORK JACKS

A T568B PINNING | B SYMBOL | C DESCRIPTION

1. SEE PARTS MATRIX FOR SPECIFIC COLORS, FACEPLATE AND CONNECTIVITY COMPONENTS, CABLE TYPE, AND PART NUMBERS.
2. DOUBLE GANG FACEPLATE WITH FOUR OUTLET IDENTIFICATION LABELS WITH CLEAR COVERS, TWO MATCHING SCREW COVERS AND MOUNTING SCREWS.
3. CLEAR DESIGNATION STRIP HOLDER. OUTLET DESIGNATION SHALL BE PLACED BEHIND HOLDER AND SHALL NOT BE ADHERED TO HOLDER. USE 1.8" X 0.375", WHITE POLYESTER LABEL. LABEL SHALL BE LASER PRINTED. USE HELVETICA 10 AS LABELING FONT.
4. PROVIDE LABELING & FACE PLATE IDENTIFICATION AS SPECIFIED IN TELECOM IDENTIFICATION AND LABELING SPEC SECTION.
5. 2 UNIT DUAL OPENING FLUSHMOUNT UNLOADED MODULE FOR MOUNTING TWO JACKS.
6. 2 UNIT BLANK MODULE, TO FILL UNUSED OPENINGS.
7. 8 PIN 8 POS JACK FOR NETWORK STATION CABLE TERMINATION.

D FACEPLATE | E NOTES

tBP
architecture
planning
interiors
management

tBP/Architecture
1000 Burnett Ave, Suite 140
Concord, CA 94520
ph: 9252466495 fx: 9252466495

architect

INFRASTRUCTURE DESIGN ASSOCIATES
1440 BROADWAY
SUITE 304 OAKLAND,
CA. 94612
PH: (510) 238-8000
FAX: (510) 238-8009

EXPIRES 12/31/04
Regis. No. 04166

consultant

APPROVED
DEPARTMENTAL STAMP
DIV. OF THE STATE ARCHITECT
DSA/OFFICE OF REGULATION
APPL NO. 10D719
BY: [illegible]
DATE: 6-4-04

agency

SAN RAMON VALLEY CENTER
CONTRA COSTA COMMUNITY COLLEGE DISTRICT
SAN RAMON, CALIFORNIA

owner

tBP project number : 20212.00
file name:
drawn by: IDA checked by:
date: 03-09-04 plot scale: 1:1

Rev:	date:	description:
1	05-26-04	Design Clarification

drawing title: TELECOM OUTLET DETAILS
building no.:
drawing no.: T6.0.2
drawing of

G:\San Ramon Valley Center\Bid Set\Acad\T602.dwg 5-27-04 11:59:15 AM cmendoza

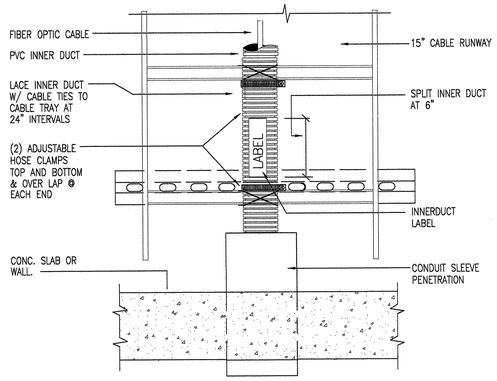

B PLAN VIEW

6 INNERDUCT AS IT ENTERS BDF/IDF

1. NEW OR EXISTING EQUIPMENT RACK OR FIBER SHELF.
2. LOCATE LABELING TO THE LEFT CORNER OF THE RACK. ONE INCH HIGH ADHESIVE BACKED SELF SPACING CHARACTERS, WHITE OR YELLOW ON BLACK BACKGROUND. LABELING SCHEME AS INDICATED IN SPECIFICATIONS AND APPROVED BY OWNER'S REPRESENTATIVE. 3M SCOTCHCAL 5003.

C NOTES

1. 48 PORT PATCH PANEL
2. RJ45 JACK STYLE ON FRONT WITH 8 POSITION. 8 WIRE, 110-STYLE TERMINATION ON BACK UNIVERSAL T568 WIRING SCHEME.
3. "FLOOR 1 – PP03" WHERE "PP" IS TO DESIGNATE IT AS A PATCH PANEL AND "03" DESIGNATES IT AS THE THIRD PATCH PANEL FOR FLOOR 1.
4. CABLE AND TERMINATION IDENTIFICATION LABEL, TO SHOW ROOM NUMBER WHERE CABLE TERMINATES AND CABLE NUMBER IN THAT ROOM, PLUS A LETTER "D" TO INDICATE IT IS A DATA CABLE. FOR EXAMPLE: "102B-03D" WHERE "102B" IS THE ROOM NUMBER. "03D" IS THE CABLE NUMBER WITH THE DATA DESIGNATION.

B NOTES

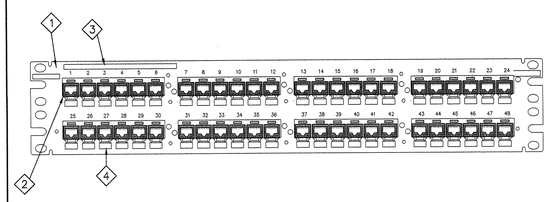

A FRONT VIEW

3 DATA NETWORK CABLE TERMINATION-48 PORT PATCH PANEL

NOTE:

1. FULLY ENCLOSED 48-POSITION, 4U, FIBER OPTIC TERMINATION SHELF FOR MOUNTING IN 19-INCH EIA/TIA DRILLED EQUIPMENT RACK. FRONT AND SIDE ACCESSIBLE.
2. HINGED FRONT COVER WITH KNOB STYLE LATCH. FIBER OPTIC COUPLER POSITION IDENTIFICATION CARDS VISIBLE WHEN PANEL IS OPENED OR CLOSED.
3. FIBER OPTIC ADAPTER IDENTIFICATION CARDS SHALL BE PROVIDED WITH THE PANEL FOR THE FRONT AND REAR LABELING OF THE ADAPTERS. THE PANEL CARDS SHALL BE OVERLAID WITH SELF-ADHESIVE FULL-SIZE LASER PRINTER GENERATED CLEAR LABEL SHEETS ADHERED TO THE MANUFACTURERS LABEL CARDS. ONE SINGLE LABEL SHALL BE USED. AN IDENTICAL LABLE SHALL BE ADHERED ON THE INSIDE OF THE RAR DOOR OF THE FIBER OPTIC TERMINATION PANEL. THE BACKGROUND OF THE SINGLE MODE LABEL SHALL BE YELLOW. THE BACKGROUND OF THE MULTI MODE LABEL SHALL BE ORANGE.
4. ADAPTERS/RETAINERS FOR COUPLING MULTI MODE AND SINGLE MODE FIBER OPTIC CABLE TERMINATIONS ON SC-CONNECTORS.
5. PROVIDE FIBER OPTIC TERMINATION SHELF COMPLETE WITH A MANUFACTURERS CABLE CLAMP AND KIT WITH BUSHING TO INSURE THE FIBER OPTIC CABLE SHEATH IS SECURED IN THE CLAMP.

B NOTES

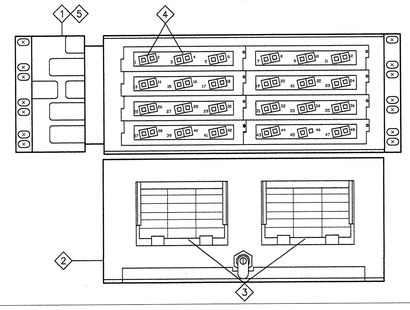

A FRONT ELEVATION

2 FIBER OPTIC TERMINATION PANEL-48 POSITION

SHEET NOTES:

1. LABEL LOCATION AT DESIGNATION STRIP 110 BLOCK-VOICE ST'N, LABEL TYPE LUCENT 110WB2-4500L, 4 PAIR LABEL WHITE, MACHINE .12"h PRINTING, AIREL SAN SERIF FONT.
2. VOICE STATION CABLES.
3. LABEL LOCATION AT DESIGNATION STRIP 110 BLOCK-RISER, LABEL TYPE LUCENT 110GA2-4500L, 5 PAIR LABEL GREEN, MACHINE .12"h PRINTING, AIREL SAN SERIF FONT.
4. LABEL LOCATION AT DESIGNATION STRIP 110 BLOCK-OSP, LABEL TYPE LUCENT 110YA2-4500L, 5 PAIR LABEL YELLOW, MACHINE .12"h PRINTING, AIREL SAN SERIF FONT.
5. CABLES SHOWN WITH DESIGNATION STRIP REMOVED. ALL LABLES SHALL BE VISIBLE FROM THE FRONT OF THE 110 BLOCKS

A NOTES

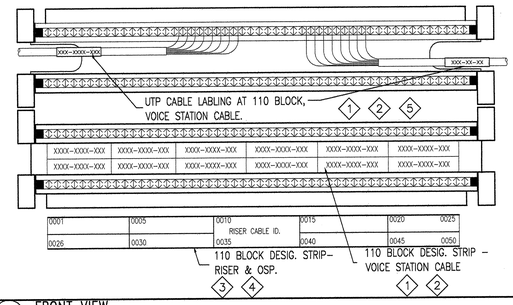

A FRONT VIEW

1 VOICE CABLE TERMINATION - 110 BLOCK

1. STAINLESS STEEL MARKER TAG, RISER CABLE >1-1/4" DIAMETER, LABEL TYPE PANDUIT MMP350-C .75 x3.5 316 STAINLESS, EMBOSSED .25"h PRINTING, AIREL SAN SERIF FONT.
2. LASER PRINTED LABELING AT RISER CABLE < 1-1/4" DIAMETER, LABEL TYPE PANDUIT LJSL19-Y3-1.
3. STAINLESS STEEL CABLE TIE W/NEOPRENE CUSHION SLEEVE, LOCATE RISER CABLE LABEL STRAP STEEL TYPE PANDUIT MLT6S-CP316 NON-MAGNETIC,.18"w NO PRINTING
4. STAINLESS STEEL CABLE TIE W/NEOPRENE CUSHION SLEEVE, LOCATE LABEL TYPE PANDUIT PCSS-CR, NO PRINTING

A NOTES

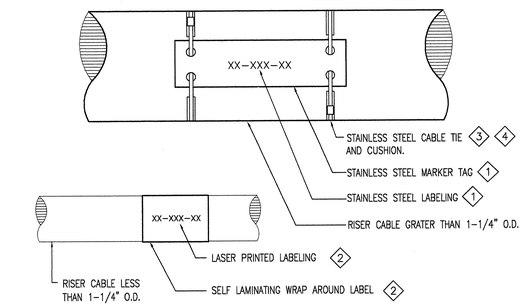

B PLAN VIEW

8 FIBER OPTIC AND COPPER RISER CABLE LABELING

1. FIBER CABLE INTERDUCT.
2. LOCATE FIBER OPTICWARNING TAGS WITHIN 12" OF ENTERING/EXITING SPLICES, CONDUIT SLEEVES AND WITHIN 12" OF TERMINATION PANEL.
3. LABEL LOCATION AT INNER DUCT IN CABLE TRAY W/ F.O. CABLE, LABEL TYPE PANDUIT PST-FO PLASTIC, 2"x3.5" YELLOW, PRE-PRINTED, AIREL SAN SERIF FONT

A NOTES

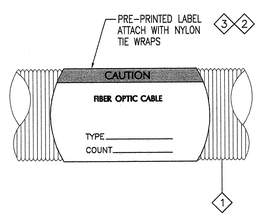

B PLAN VIEW

7 FIBER OPTIC INNERDUCT LABELING

1. EQUIPMENT CABINET.
2. LOCATE LABELING TO THE LEFT CORNER OF THE RACK. ONE INCH HIGH ADHESIVE BACKED SELF SPACING CHARACTERS, WHITE OR YELLOW ON BLACK BACKGROUND. LABELING SCHEME AS INDICATED IN SPECIFICATIONS AND APPROVED BY OWNER'S REPRESENTATIVE. 3M SCOTCHCAL 5003.
3. PROVIDE LABELING OF CABINET SIDE PANELS ONLY AT CABINETS LOCATED AT THE END OF THE CABINET ROWS. LOCATE LAELING AT THE CENTER OF THE SIDE PANEL AT A MIN. HEIGHT OF 6'-0" A.F.F. PROVIDE 1 INCH HIGH OF ADHESIVE BACKED, SELF SPACING CHARACTERS WHITE OR YELLOW ON BLACK BACKGROUND. LABEL TO SHOW ROOM # AND ROW #.

C NOTES

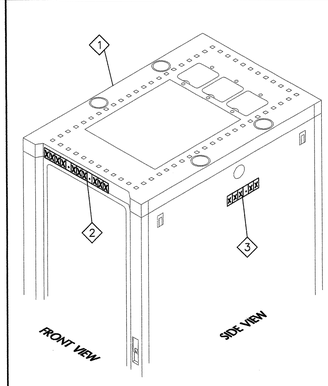

A ISOMETRIC VIEW

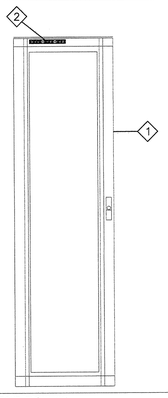

B FRONT ELEVATION

4 CABINET LABELING & IDENTIFICATION

tBP
architecture
planning
interiors
management

tBP/Architecture
1000 Burnett Ave, Suite 140
Concord, CA 94520
ph: 925.246.6419 fx: 925.246.6495

architect

INFRASTRUCTURE DESIGN ASSOCIATES
1440 BROADWAY
SUITE 304 OAKLAND,
CA. 94612
PH: (510) 238-8000
FAX: (510) 238-8009

EXPIRES 12/31/04
Regis. No. 04166

consultant

BUREAU OF THE STATE ARCHITECT
OFFICE OF REGULATION SERVICES
APPL NO. 105719
AC-DSA FEE $0
DATE

agency

SAN RAMON VALLEY CENTER
CONTRA COSTA COMMUNITY COLLEGE DISTRICT
SAN RAMON, CALIFORNIA

owner

tBP project number : 20212.00
file name:
drawn by: IDA checked by:
date: 03-09-04 plot scale: 1:1

Rev:	date:	description:

drawing title: TELECOM CABLE TERMINATION & LABELING DETAILS
building no:
drawing no: T6.1.1
drawing of

G:\San Ramon Valley Center\DSA\Acad\T611.dwg 3-05-04 10:43:01 AM cmendoza

12 CABLE RUNWAY TRIANGULAR BRACKET

NOTE:



CABLE RUNWAY TRIANGULAR BRACKET

(B) PLAN SYMBOL (LA15_SUPPORT_WALL)

(C) PRODUCT DESCRIPTION

1. "C" CHANNEL CABLE RUNWAY STRINGER, 2" STYLE.
2. CABLE RUNWAY TRIANGULAR BRACKET.
3. HOLD-DOWN CLAMP.
4. CHANNEL SPRING NUTS AND BOLTING HARDWARE.

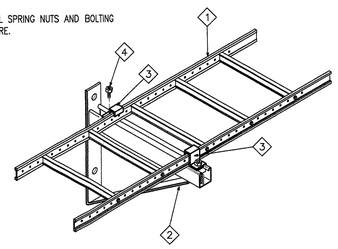

(A) ISOMETRIC VIEW

11 B60 BUSWAY SUPPORT

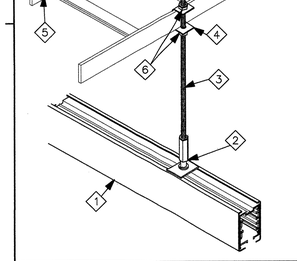

(A) PLAN SYMBOL

(B) PRODUCT DESCRIPTION

1. PLUG-IN BUSWAY STRAIGHT SECTION.
2. ROD MOUNT HANGER TO SUPPORT BUSWAY SECTION FROM CABLE RUNWAY ABOVE. UNIVERSAL ELECTRIC STARLINE PART NO. RHB-3.
3. THREADED ROD, 3/8".
4. RUNWAY SUPPORT BRACKET FOR SECURING THREADED ROD TO CABLE RUNWAY. CHATSWORTH PART NO. 11408-001, B-LINE OR EQUAL.
5. CABLE RUNWAY, 15 INCHES WIDE X 2 INCHES HIGH MOUNTED @ 8'-9" A.F.F.
6. 3/8 INCH NUTS FOR ANCHORING THREADED ROD TO RUNWAY SUPPORT BRACKET.

(C) ISOMETRIC VIEW

(D) NOTES

10 B60 ASSEMBLY

1. END POWER FEED UNIT JUNCTION BOX, 60A, 4 POLE/GROUND. THE END POWER FEED CONNECTOR INSERTS INTO THE END OF THE FIRST BUSWAY SECTION AND IS BOLTED TO IT. UNIVERSAL ELECTRIC STARLINE PART NO. EPFB0-4
2. PLUG-IN BUSWAY STRAIGHT SECTIONS WITH SOLID COPPER BUSBARS IN A CHANNEL CONFIGURATION, 60A, 4 POLE/GROUND. UNIVERSAL ELECTRIC STARLINE PART NO. B60-XX-4 (XX IS FOR THE REQUIRED LENGTHS NEEDED IN 5', 10' OR 20' LENGTHS)
3. BUS CONNECTOR TO JOIN ADJACENT BUSWAY SECTIONS ELECTRICALLY. UNIVERSAL ELECTRIC STARLINE PART NO. BC-4.
4. HOUSING COUPLER TO JOIN ADJACENT BUSWAY SECTIONS MECHANICALLY. UNIVERSAL ELECTRIC STARLINE PART NO. HC-2.
5. END CAP CLOSES OFF END PIECES OF THE BUSWAY SECTIONS SECURED IN PLACE WITH A SET SCREW. UNIVERSAL ELECTRIC STARLINE PART NO. EC-60
6. ROD MOUNT HANGER TO SUPPORT BUSWAY SECTION FROM CABLE RUNWAY ABOVE UNIVERSAL ELECTRIC STARLINE PART NO. RHB-3.

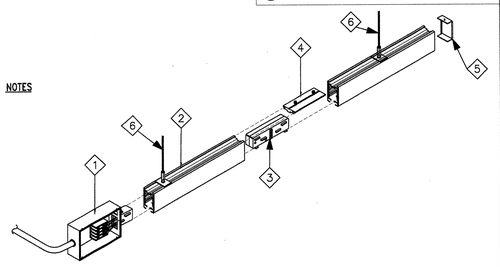

(A) ISOMETRIC VIEW

(B) NOTES

(D) PLAN SYMBOL

ELECTRICAL PLUG-IN BUSWAY SYSTEM.

(C) PRODUCT DESCRIPTION

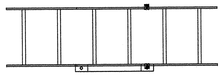

DUAL LAYER OF CABLE RUNWAY WITH DIAGONAL BRACE SUPPORT.

(B) PLAN SYMBOL (LA15_SUPPORT_BRACE)

(C) DESCRIPTION

1. "C" CHANNEL CABLE RUNWAY STRINGER 2" STYLE
2. 5/8" THREADED ROD.
3. SLOTTED SUPPORT KIT.
4. 45° STEEL ANGLE BARS WITH HARDWARE TO ATTACH TO CENTER ANGLE BAR OF CORRECT LENGTH
5. 2" X 2" STEEL 45° ANGLED BAR TRIMMED AND DRILLED TO SECURE PROVIDED ANGLE BARS TO "C" CHANNEL AND THREADED ROD.

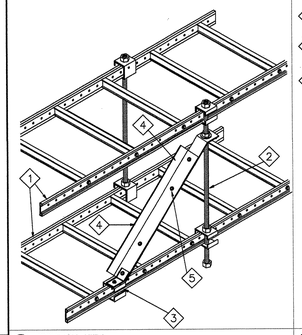

(A) ISOMETRIC VIEW

(D) NOTES

9 CABLE RUNWAY SEISMIC BRACING BETWEEN DUAL LEVELS OF RUNWAY

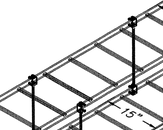

CABLE RUNWAY WALL SUPPORT

(B) PLAN SYMBOL (LA15_SUPPORT_WALL)

(C) PRODUCT DESCRIPTION

1. ALUMINUM "C" CHANNEL RUNWAY 2" STRINGER STYLE
2. CABLE RUNWAY WALL SUPPORT STEEL ANGLE TO SECURE CABLE RUNWAY TO A WALL.
3. "J" BOLTS AND 5/16"-18 HARDWARE TO SECURE STEEL ANGLE TO "C" CHANNEL STRINGER.

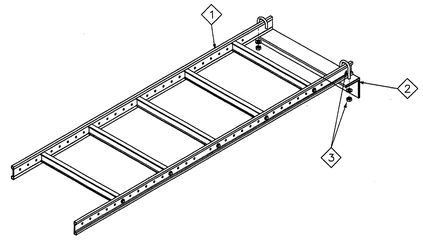

(A) ISOMETRIC VIEW

8 CABLE RUNWAY WALL SUPPORT

NOTE:

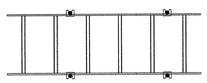

UPPER CABLE RUNWAY SUPPORTED FROM LOWER CABLE RUNWAY BY THREADED ROD.

(A) PLAN SYMBOL

(B) PRODUCT DESCRIPTION

1. UPPER CABLE RUNWAY 15" WIDE X 2" HIGH.
2. 5/8" THREADED ROD.
3. STRINGER SUPPORT KIT FOR ATTACHING CABLE RUNWAY TO 5/8" THREADED ROD.
4. LOWER CABLE RUNWAY, 15" WIDE X 2" HIGH.

(C) ISOMETRIC VIEW

(D) NOTES

7 CABLE RUNWAY SUPPORT DETAIL

NOTE:

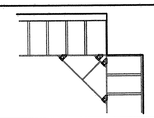

CABLE RUNWAY CORNER SUPPORT KIT USED FOR LARGER BEND RADIUS.

(A) PLAN SYMBOL

(B) PRODUCT DESCRIPTION

1. CABLE RUNWAY 15" WIDE X 2" HIGH
2. CORNER SUPPORT USED TO PRIVIDE ADDITIONAL SUPPORT FOR INTERSECTING CABLE RUNWAY AND LARGER CABLE BEND RADIUS

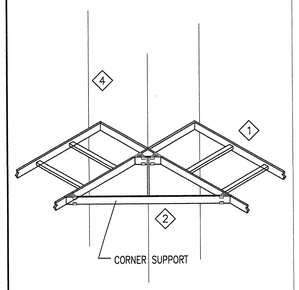

(C) ISOMETRIC VIEW

(D) NOTES

6 CABLE RUNWAY OUTSIDE CORNER SUPPORT

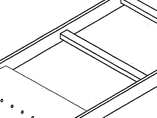

"TEE" KIT FOR SPLICING TOGETHER PERPENDICULAR SECTIONS.

(A) PLAN SYMBOL

(B) PRODUCT DESCRIPTION

1. CABLE RUNWAY 15" WIDE X 2" HIGH.
2. RUNWAY STRINGER "TEE" KIT.

(C) ISOMETRIC VIEW

(D) NOTES

5 CABLE RUNWAY HORIZONTAL "TEE" ASSEMBLY

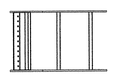

SHEET METAL FITTING FOR PROVIDING CABLE RUNWAY DROPOUT.

(A) PLAN SYMBOL

(B) PRODUCT DESCRIPTION

1. CABLE RUNWAY 15" WIDE X 2" HIGH
2. PANNING DOWNTURN DROPOUT.

(C) ISOMETRIC VIEW

(D) NOTES

4 CABLE RUNWAY

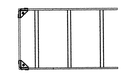

RUNWAY TERMINATION ASSEMBLY

(A) PLAN SYMBOL

(B) PRODUCT DESCRIPTION

1. CABLE RUNWAY 15" WIDE X 2" HIGH
2. DE-BUR ALL CUT END PIECES PRIOR TO FINAL ASSEMBLY.
3. RUNWAY TERMINATION, FINISH TO MATCH STRINGERS.

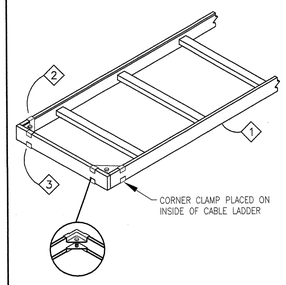

(C) ISOMETRIC VIEW

(D) NOTES

3 CABLE RUNWAY END ENCLOSURE

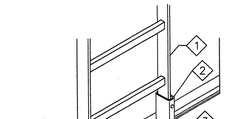

BONDING STRAP FOR BRIDGING SPLICES AND INTERSECTIONS.

(A) PLAN SYMBOL

(B) PRODUCT DESCRIPTION

1. CABLE RUNWAY 15" WIDE X 2" HIGH.
2. GROUNDING STRAP, #6 FLEXIBLE TIN PLATED COPPER WIRE, 7 3/4" LONG WITH 1/4" - 20 HARDWARE, CRIMPED LUGS WITH HOLES @ 3/4" CENTERS. USE ONE GROUNDING STRAP AT EACH END SPLICE, TEE SPLICE AND ANGLE SPLICE.
3. # 6 AWG STRANDED COPPER WITH GREEN SHEATH INSULATION FROM CABLE RUNWAY ASSEMBLY TO THE GROUND BUS BAR IN THE IDF. TERMINATE THE # 6 AWG CABLE IN A TWO HOLE LONG BARREL COMPRESSION LUG WITH 1/4" BOLTS ON 3/4" CENTERS AT BOTH THE GROUND BAR AND THE CABLE RUNWAY ASSEMBLY. PANDUIT LCC6-14B-L, OR EQUAL.

(C) ISOMETRIC VIEW

(D) NOTES

1 CABLE RUNWAY VERTICAL - FLOOR ATTACHMENT

X CABLE RUNWAY GROUNDING/BONDING

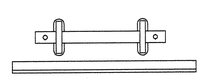

VERTICAL CABLE LADDER ATTACHMENT AT FLOOR.

(A) PLAN SYMBOL

(B) PRODUCT DESCRIPTION

1. CABLE RUNWAY
2. END SUPPORT KIT SPLICE.
3. END SUPPORT KIT.
4. ATTACH TO CONCRETE SLAB WITH 3" EXPANSION ANCHOR AND 1/2" GRADE 8 BOLT.

(C) ISOMETRIC VIEW

(D) NOTES

tBP architecture planning interiors management

LICENSED ARCHITECT No. C-26855 EXP. 12-31-05 STATE OF CALIFORNIA

LICENSED ARCHITECT No. 401-E EXP. 12-31-05 STATE OF CALIFORNIA

tBP/Architecture
1000 Burnett Ave, Suite 140
Concord, CA 94520
ph: 925.246.6419 fx: 925.246.6495

architect

INFRASTRUCTURE DESIGN ASSOCIATES
1440 BROADWAY
SUITE 304 OAKLAND,
CA. 94612
PH: (510) 238-8000
FAX: (510) 238-8009

REGISTERED COMMUNICATIONS DISTRIBUTION DESIGNER BICSI

EXPIRES 12/31/04
Regis. No. 04166

consultant

RE-IDENTIFICATION STAMP
FOR PERMIT SUBMITTAL
OFFICE OF REGULATION SERVICES
APPL NO. 102719
AC
DATE 12-5-05

agency

SAN RAMON VALLEY CENTER
CONTRA COSTA COMMUNITY COLLEGE DISTRICT
SAN RAMON, CALIFORNIA

owner

tBP project number : 20212.00
file name:
drawn by: IDA checked by:
date: 03-09-04 plot scale: 1:1

Rev:	date:	description:

drawing title: TELECOM CABLE RUNWAY DETAILS

building no:

drawing no: T6.2.1

drawing of

G:\San Ramon Valley Center\DSA\Acad\T621.dwg 3-05-04 10:43:48 AM cmendoza



A PLAN SYMBOL

FRAMING CLIP ASSEMBLY FOR SECURING CROSS OVER OF DUAL SUPPORT CHANNEL ASSEMBLIES.

B PRODUCT DESCRIPTION

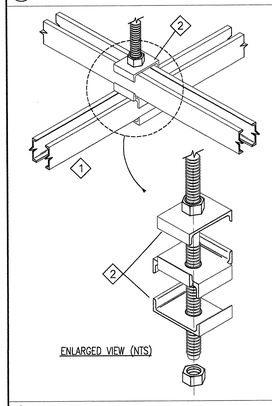

ENLARGED VIEW (NTS)

1. HORIZONTAL SUPPORT CHANNELS, 2" X 9/16". TWO CHANNELS SHALL BE PROVIDED AND PLACED SIDE-BY-SIDE AT EACH LOCATION INDICATED ON THE DRAWING.
2. CROSSOVER FRAMING CLIP KIT TO SECURE PERPENDICULAR SUPPORT CHANNEL ASSEMBLY, Y2N FINISH INCLUDING (1) CROSSOVER CLIP, (2) FRAMING CLIPS AND 5/8" - 11 HARDWARE.

NOTE:

IF 5/8" THREADED ROD CONNECTION IS MADE AT CROSSOVER OF SUPPORT CHANNEL, USE SUSPENDING CROSSOVER FRAMING CLIP KIT, IN LIEU OF CROSSOVER FRAMING CLIP KIT.

C ISOMETRIC VIEW

D NOTES

8 SUPPORT CHANNEL CROSSOVER FRAMING ASSEMBLY WITH 5/8" THREADED ROD



A PLAN SYMBOL

TUBULAR STEEL SUPPORT COLUMN FOR SUPPORTING DUAL SUPPORT CHANNEL.

B PRODUCT DESCRIPTION

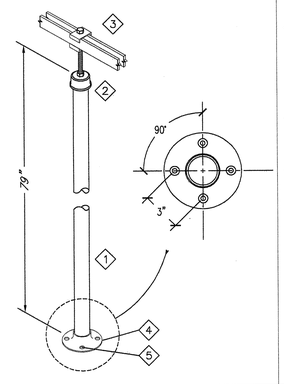

C ISOMETRIC VIEW

1. SUPPORT COLUMN W/79" TUBULAR STEEL 2" PIPE FLOOR FLANGE, CENTER DRILLED AND TAPPED FOR A 5/8" THREADED ROD. FLOOR FLANGE SHALL BE 5 5/8" IN DIAMETER WITH MOUNTING HOLES LOCATED AT 11/16" FROM BASE EDGE.
2. PIPE CAP DRILLED AND TAPPED FOR A 5/8" THREADED ROD. PROVIDE THREADED ROD OF APPROPRIATE LENGTH TO CONNECT TO FRAMING CLIP SUPPORT ASSEMBLY.
3. THREADED ROD CONNECTION TO SUPPORT CHANNEL USING FRAMING CLIP KIT.
4. SUPPORT COLUMN BASE.
5. 1/4" CRBON STEEL DROP-IN ANCHORS AND ANCHORS BOLTS WITH MINIMUN INSERTION OF 1". PROVIDE (4) PER COLUMN.

D NOTES

7 SUPPORT COLUMN FOR SUPPORT CHANNEL

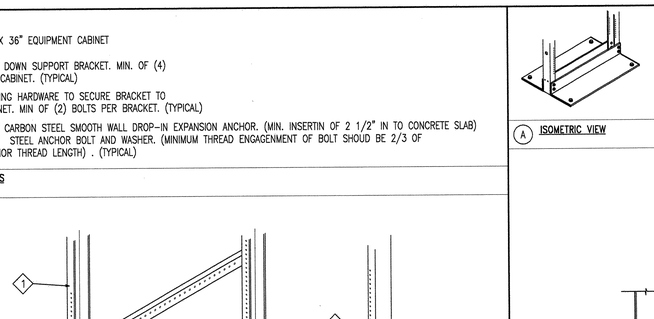

A ISOMETRIC VIEW

1. 24" X 36" EQUIPMENT CABINET
2. BOLT DOWN SUPPORT BRACKET. MIN. OF (4) PER CABINET. (TYPICAL)
3. BOLTING HARDWARE TO SECURE BRACKET TO CABINET. MIN OF (2) BOLTS PER BRACKET. (TYPICAL)
4. 5/8" CARBON STEEL SMOOTH WALL DROP-IN EXPANSION ANCHOR. (MIN. INSERTIN OF 2 1/2" IN TO CONCRETE SLAB) 5/8" STEEL ANCHOR BOLT AND WASHER. (MINIMUM THREAD ENGAGENMENT OF BOLT SHOUD BE 2/3 OF ANCHOR THREAD LENGTH) . (TYPICAL)

B NOTES

6 EQUIPMENTCABINET, BOLT DOWN SUPPORT BRACKET

A ISOMETRIC VIEW

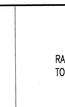

B PLAN SYMBOL

RACK FLOOR FLANGE ATTACHMENT TO CONCRETE FLOOR.

C DESCRIPTION

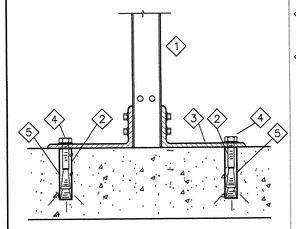

D PLAN VIEW

1. STANDARD 19" x 84" OPEN RAIL RACK.
2. 5/8" CARBON STEEL-SMOOTH WALL DROP-IN EXPANSION ANCHOR, WITH MINIMUM INSERTION OF 2 1/2" INTO CONCRETE SLAB.
3. RACK FLANGE
4. 5/8" STEEL ANCHOR BOLT AND WASHER. MINIMUN THREAD ENGAGEMENT OF BOLT SHOULD BE AT LEAST 2/3 OF THE ANCHER THREAD LENGTH.
5. CONCRETE EPOXY, USE ANCHOR ULTRA BOND OR EQUAL.

E NOTES

3 RACK ATTACHMENT AT CONCRETE FLOOR

1. EQUIPMENT CABINET PERFORATED AND LOCKABLE FRONT DOOR (BLACK).
2. EQUIPMENT CABINET PERFORATED AND LOCKABLE SPLIT REAR DOORS (BLACK).
3. EQUIPMENT CABINET ROOF PANEL (BLACK).
4. CABLE ENTRY ACCESS HOLES TO BE LOCATED NEAR REAR OF EQUIPMENT CABINET ROOF PANEL TO ROUTE PATCH CORDS FROM INSIDE EQUIPMENT CABINET TO THE PATCH PANELS LOCATED ABOVE THE CABINET.
5. 4 POST (24"W X 36"D X 82"H) EQUIPMENT CABINET FRAME WITH 42U RACK MOUNT UNITS TO ACCOMMODATE 19" RACK MOUNTABLE EQUIPMENT.

B NOTES

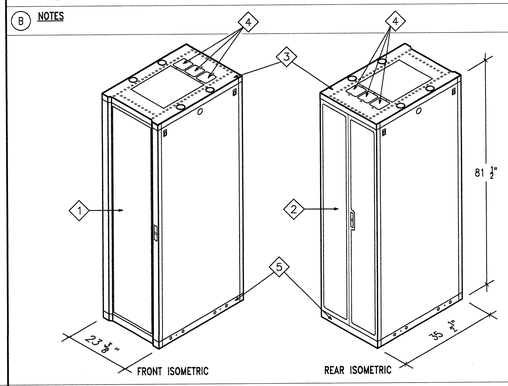

A ISOMETRICS

5 EQUIPMENT CABINET ISOMETRIC

1. EQUIPMENT CABINET PERFORATED AND LOCKABLE FRONT DOOR (BLACK).
2. EQUIPMENT CABINET PERFORATED AND LOCKABLE SPLIT REAR DOORS (BLACK).
3. EQUIPMENT CABINET ROOF PANEL (BLACK).
4. CABLE ENTRY ACCESS HOLES TO BE LOCATED NEAR REAR OF EQUIPMENT CABINET ROOF PANEL TO ROUTE PATCH CORDS FROM INSIDE EQUIPMENT CABINET TO THE PATCH PANELS LOCATED ABOVE THE CABINET.
5. 4 POST (24"W X 36"D X 82"H) EQUIPMENT CABINET FRAME WITH 42U RACK MOUNT UNITS TO ACCOMMODATE 19" RACK MOUNTABLE EQUIPMENT.

B NOTES

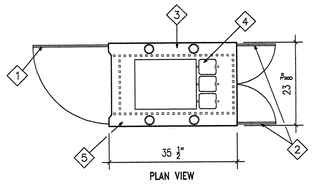

PLAN VIEW

A PLAN

4 EQUIPMENT CABINET PLAN

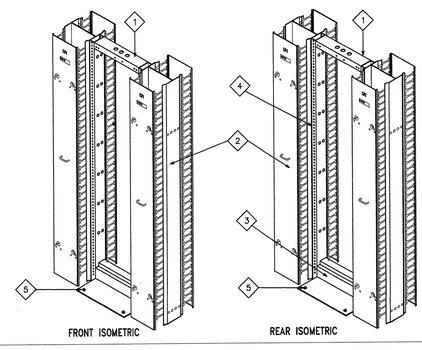

A ISOMETRIC VIEWS

2 EQUIPMENT RACK BUILD-OUT

1. 19 X 84 INCH SELF SUPPORTING, ALUMINUM, U.L. LISTED, POWDER COATED, EQUIPMENT RACK, DRILLED AND TAPPED, EIA/TIA SPACED HOLES FOR ATTACHING EQUIPMENT ON FRONT AND BACK.
2. (1) DOUBLE-SIDED VERTICAL RACK CABLE MANAGER ON EACH SIDE OF THE EQUIPMENT RACK.
3. BASE DUST COVER, 19 INCH EQUIPMENT RACK.
4. RACK RAILS, ON FRONT AND REAR OF RACK, HOLES DRILLED AND TAPPED ON EIA/TIA CENTERS.
5. 5/8" CARBON STEEL DROP-IN ANCHORS AND ANCHOR BOLTS WITH MINIMUN INSERTION OF 2 1/2". PROVIDE (4) PER RACK.

B NOTES

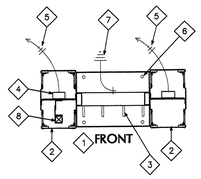

1. 19 X 84 INCH SELF SUPPORTING, ALUMINUM, U.L. LISTED, POWDER COATED, EQUIPMENT RACK, DRILLED AND TAPPED, EIA/TIA SPACED HOLES FOR ATTACHING EQUIPMENT ON FRONT AND BACK.
2. (1) DOUBLE-SIDED VERTICAL RACK CABLE MANAGER ON EACH SIDE OF THE EQUIPMENT RACK.
3. LARGE HORIZONTAL RING PANEL, 2 RU.
4. RACK MOUNT POWER DISTRIBUTION UNIT (PDU), 16 AMP, 120 VOLT, WITH DISPLAY INTERFACE, (24) NEMA 5-20R OUTLETS, NEMA L5-20 POWER CORD, CORD RETAINER HOLES, SERIAL CABLE CONNECTION FOR INTERFACE
5. CONNECT PDU TO DROP CORD PLUG-IN CABLE WITH 120VAC, 20 AMP, L5-20R RECEPTACLE CONNECTOR FROM JUNCTION BOX MOUNTED TO ELECTRICAL BUSWAY ABOVE. CIRCUITRY, BUSWAY, JUNCTION BOX AND DROP CORD PROVIDED BY OTHERS.
6. 5/8" CARBON STEEL DROP-IN ANCHORS AND ANCHOR BOLTS WITH MINIMUN INSERTION OF 2 1/2". PROVIDE (4) PER RACK.
7. PROVIDE # 6 COPPER GROUND CABLE BETWEEN THE RACK AND THE COPPER GROUND BAR.
8. 2" VERTICAL FIBER OPTIC SLOTTED DUCT TO BE MOUNTED INSIDE TO THE FRONT AND MIDDLE OF THE VERTICAL CABLE MANAGER.

B NOTES

1 EQUIPMENT RACK PLAN

tBP
architecture
planning
interiors
management

LICENSED ARCHITECT MINNESOTA NO. 20025 REGISTERED

LICENSED ARCHITECT VIRGINIA NO. 0-0605 REGISTERED

LICENSED ARCHITECT CALIFORNIA NO. C-26719 REGISTERED

tBP/Architecture
1000 Burnett Ave, Suite 140
Concord, CA 94520
ph: 925.246.6419 fx: 925.246.6495

architect

INFRASTRUCTURE DESIGN ASSOCIATES
1440 BROADWAY
SUITE 304 OAKLAND,
CA. 94612
PH: (510) 238-8000
FAX: (510) 238-8009

REGISTERED COMMUNICATIONS DISTRIBUTION DESIGNER BICSI

EXPIRES 12/31/04
Regis. No. 04166

consultant

IDENTIFICATION STAMP
BUILDING INSPECTION
OFFICE OF REGULATION SERVICES
APPL NO. 165719
AC-15-03-55
DATE

agency

SAN RAMON VALLEY CENTER

CONTRA COSTA COMMUNITY COLLEGE DISTRICT

SAN RAMON, CALIFORNIA

owner

tBP project number : 20212.00

file name:

drawn by: IDA checked by:

date: 03-09-04 plot scale: 1:1

Rev:	date:	description:

drawing title: TELECOM RACKS, CABINETS & DUAL CHANNEL SUPPORT DETAILS

building no:

drawing no:

T6.3.1

drawing of

G:\San Ramon Valley Center\DSA\vcad\T6311.dwg 3-05-04 10:45:12 AM omendoza

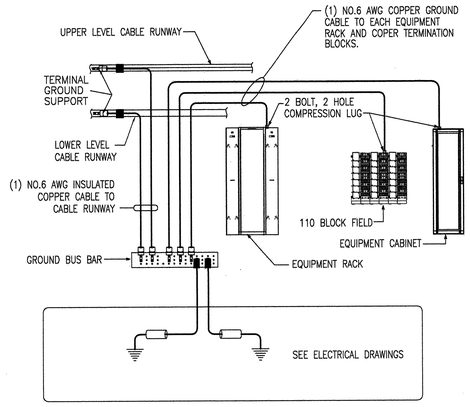

8 GROUND WIRING DIAGRAM FOR TYPICAL MDF

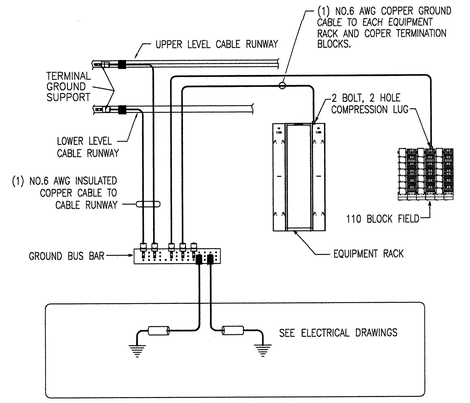

7 GROUND WIRING DIAGRAM FOR TYPICAL TELECOM ROOM

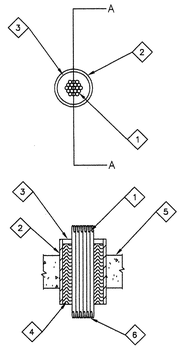

SECTION A–A

1. PENETRATING COMPONENTS: DATA OR VOICE CABLES WITH AGGREGATE CROSS–SECTIONAL AREA OF 4.9 SUPPORT THE CABLES ON EACH SIDE OF THE SLEEVE ASSEMBLY.
2. WALL/FLOOR CONSTRUCTION: 4" EMT OR METALLIC SLEEVE CAST OR GROUTED INTO FLOOR OR WALL ASSEMBLY. SLEEVE SHALL EXTEND A NOMINAL 2" PAST EACH SIDE OF THE FINISHED SURFACE OF THE FLOOR OR WALL.
3. FILL MATERIAL: 1–3/4" THICKNESS (MIN.) OF PUTTY. FILL MATERIAL MEASURED FROM THE BOTTOM OF THE FILL MATERIAL TO THE TOP OF THE SLEEVE. FILL MATERIAL SHALL COMPLETELY FILL THE ANNULUS.

   NELSON FIRESTOP PRODUCTS – FSP PUTTY
4. FILL MATERIAL: 5–1/4" (MIN.) OF 4 PCF (MIN.) MINERAL WOOL BATT INSULATION. FIRMLY PACK THE INSULATION INTO THE OPENING. RECESS THE INSULATION BELOW THE TOP OF THE SLEEVE TO PROVIDE ADEQUATE CLEARANCE FOR THE FILL MATERIAL.
5. WALL/FLOOR CONSTRUCTION: MINIMUM 4–1/2" REINFORCED LIGHTWEIGHT OR NORMAL WEIGHT CONCRETE.
6. MAXIMUM CABLE FILL 29%. APPROXIMATELY (128) – 4 PAIR 24 AWG STATION CABLES AND 2 STRAND MULTIMODE FIBER OPTIC CABLE WITH OVER SHEATH.

A PLAN/SECTION — B FIRE STOPPING NOTES

6 C-AJ-3089 - CABLE THROUGH EMT FLOOR SLEEVE

1. WALL ASSEMBLY– THE 1 OR 2 HR. FIRE–RATED GYPSUM WALLBOARD/ STUD WALL ASSEMBLY SHALL BE CONSTRUCTED OF THE MATERIALS AND IN THE MANNER DESCRIBED IN THE INDIVIDUAL U300 OR U400 SERIES WALL OR PARTITION DESIGN IN THE UL FIRE RESISTANCE DIRECTORY AND SHALL INCLUDE THE FOLLOWING CONSTRUCTION FEATURES:

   A. STUDS– WALL FRAMING MAY CONSIST OF EITHER WOOD STUDS OR STEEL CHANNEL STUDS. WOOD STUDS TO CONSIST OF NOM 2 BY 4 IN. LUMBER SPACED 16 IN. OC WITH NOM 2 BY 4 IN. LUMBER END PLATES AND CROSS BRACES STEEL STUDS TO BE 3–1/2 IN. WIDE BY 1–3/8 IN. DEEP CHANNELS SPACED MAX 24 IN. OC

   B. WALL BOARD, GYPSUM*– 5/8 IN. THICK, 4FT WIDE WITH SQUARE OR TAPERED EDGES. THE GYPSUM WALLBOARD TYPE, THICKNESS, NUMBER OF LAYERS, FASTENER TYPE AND SHEET ORIENTATION SHALL BE AS SPECIFIED IN THE UNDIVIDUAL U300 OR U400 SERIES DESIGN IN THE UL FIRE RESISTANCE DIRECTORY. MAX DIAM OF OPENING IS 6 IN.

   THE HOURLY F RATING OF THE FIRESTOP SYSTEM IS 1 HR WHEN INSTALLED IN A 1 HR FIRE RATED WALL AND 2 HR WHEN INSTALLED IN A 2 HR FIRE RATED WALL.
2. STEEL SLEEVE–CYLINDRICAL SLEEVE FABRICATED FROM MIN 0.019 IN. THICK (28 GAUGE) GALV SHEET AND HAVING A MIN 2 IN. LAP ALONG THE LONGITUDINAL SEAM. LENGTH OF STEEL SLEEVE TO BE EQUAL TO THICKNESS OF WALL PLUS APPROX 7/8 TO 1 IN. SUCH THAT WHEN INSTALLED, THE ENDS OF THE SLEEVES WILL PROJECT APPROX 7/16 TO 1/2 IN. BEYOND THE SURFACE OF THE WALL IN EACH SIDE OF THE WALL ASSEMBLY. SLEEVE INSTALLED BY COILING THE SHEET STEEL TO DIAM SMALLER THAN THE MAX 6 IN. DIAM THROUGH OPENINGS, INSERTING THE COIL THROUGH THE OPENINGS AND RELEASING THE COIL TO LET IT UNCOIL AGAINST THE CIRCULAR CUTOUTS IN THE GYPSUM WALLBOARD LAYERS.
3. CABLES– AGGREGATE CROSS–SECTIONAL AREA OF CABLES IN OPENING TO BE MIN 8 PERCENT TO MAX 36 PERCENT OF THE CROSS–SECTIONAL AREA OF THE SLEEVED OPENING IN WALL. CABLES TO BE RIGIDLY SUPPORTED ON BOTH SIDES OF WALL ASSEMBLY. THE SPACE BETWEEN CABLES AND PERIPHERY OF OPENING SHALL BE MIN 1/4 IN. TO MAX 2–1/2 IN. MIN SEPARATION BETWEEN ARMORED CABLES AND /OR METAL–CLAD CABLES (ITEM 3F) AND BETWEEN ARMORED CABLES AND /OR METAL–CLAD CABLES AND ALL OTHER TYPES OF CABLES SHALL BE 1/4 IN. IN ANY COMBINATION OF THE FOLLOWING TYPES AND SIZES OF COPPER CONDUCTOR CABLE MAY BE USED.

   A. MAX 350 KCMIL SINGLE CONDUCTOR POWER CABLES; CROSS LINKED POLYETHYLENE (XLPE) INSULATION.

   B. MAX 200 PAIR NO. 24 AWG CONDUCTOR TELECOMMUNICATION CABLES; POLYVINYL CHLORIDE (PVC) INSULATION AND JACKET.

   C. MAX 7/C NO. 2/0 AWG MULTICONDUCTOR POWER AND CONTROL CABLES; XLPE OR PVC INSULATION WITH XLPE OR PVC JACKET.

   D. MAX 3/C NO. 2/0 AWG CABLES; PVC INSULATION AND JACKET.

   E. MAX 6/94 FIBER OPTIC (F.O.) CABLE; PVC INSULATION AND JACKET.

   F. MAX FOUR COPPER CONDUCTOR NO. 2/0 AWG (OR SMALLER) ALUMINUM OR STEEL ARMORED CABLES OR METAL–CLAD CABLE CLASSIFIED AS A THROUGH PENETRATION PRODUCT. THE T RATING IS 0 HR WHEN ARMORED CABLES OR METAL–CLAD CABLES ARE USED. SEE THROUGH PENETRATING PRODUCT* (XHLY) CATEGORY IN THE FIRE RESISTANCE DIRECTORY FOR NAMES OF MANUFACTURERS. ANY ALUMINUM OR STEEL ARMORED CABLE OR METAL–CLAD CABLE CLASSIFIED AS A THROUGH PENETRATION PRODUCT MEETING THE ABOVE SPECIFICATIONS MAY BE USED.
4. PACKING MATERIAL–MIN 1 IN. THICKNESS OF MINERAL WOOL BATT INSULATION FIRMLY PACKED INTO STEEL SLEEVE ON BOTH SIDES OF THE WLL ASSEMBLY AS PERMANENT FORMS. PACKING MATERIAL TO BE RECESSED MIN 1 IN. FROM END OF STEEL SLEEVE (MIN 1/2 IN. FROM SURFACE OF GYPUM WALLBOARD) ON BOTH SIDES OF WALL ASSEMBLY.
5. FILL, VOID OR CAVITY MATERIAL*– CAULK–MIN 1 IN. THICKNESS OF FILL MATERIAL APPLIED WITHIN THE ANNULUS, FLUSH WITH BOTH ENDS OF THE STEEL SLEEVE. A NOM 1/4 IN. DIAM CONTINUOUS BEAD OF CAULK SHALL BE APPLIED GYPSUM WALLBOARD LAYERS ON BOTH SIDES OF THE WALL ASSEMBLY.

   MINNESOTA MINING & MFG. CO. – CP 25WB+
   * BEARING THE UL CLASSIFICATION MARKING

B FIRE STOPPING NOTES

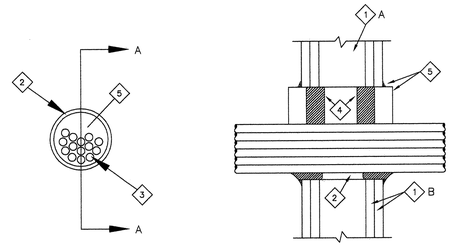

SECTION — SECTION A–A

A SECTIONS

4 W-L-3032 - CABLE THROUGH FRAMED WALL

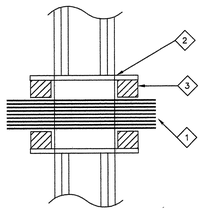

SECTION

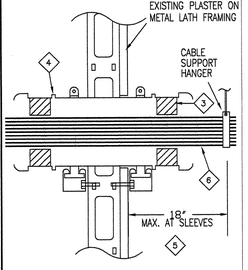

SECTION

1. PENETRATING COMPONENTS: DATA OR VOICE CABLES W/ AGGREGATE CROSS–SECTIONAL AREA OF 5.0 SQUARE INCHES. RIGIDLY SUPPORT THE CABLES ON EACH SIDE OF THE SLEEVE ASSEMBLY. AGGREGATE OF CABLE FILL SHALL NOT EXCEED 40%. MAXIMUM DIAMETER OF OPENING SHALL NOT EXCEED 4".
2. EMT METAL SLEEVE.
3. MIN. 1" THICK PUTTY PACKED TIGHTLY INTO ANNULAR SPACE BETWEEN CABLES AND CONDUIT SLEEVE AS WELL AS THE INTERSTICES BETWEEN CABLES.

   MINNESOTA MINING AND MANUFACTURING CO. – MPS–2+
4. BOX CONNECTOR AND BUSHING RING TO PROTECT STATION CABLES ARE NOT PART OF THE FIRE STOPPING SYSTEM AND ARE SHOWN FOR COORDINATION.
5. SUPPORT CABLES WITHIN 12" AT FIRESTOPPING SYSTEM ON BOTH SIDES OF THRU WALL PENETRATIONS. SEE UL FIRE RESISTANCE DIRECTORY.
6. MAXIMUM CABLE FILL 40%. APPROXIMATELY (132) – 4 PAIR 24 AWG STATION CABLES AND 2 STRAND MULTIMODE FIBER OPTIC CABLE W/ OVER SHEATH.

A PLAN/SECTION — B FIRE STOPPING NOTES

4 W-L-3031 - THROUGH WALL PENETRATION W/ EMT SLEEVE

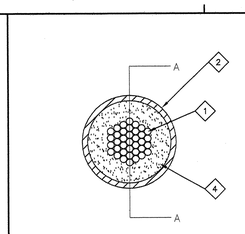

SECTION A–A

1. PENETRATING COMPONENTS: DATA OR VOICE CABLES W/ AGGREGATE CROSS–SECTIONAL AREA OF 4.14 SQUARE INCHES. AGGREGATE OF CABLE FILL SHALL NOT EXCEED 33%. MAX. DIAMTER OF OPENING SHALL NOT EXCEED 4".
2. METALLIC SLEEVE: 4" DIAMETER (MAX.) SCHEDULE 5 (MAX) METALLIC SLEEVE CUT FLUSH WITH WALL SURFACE AND CAST INTO WALL USING JOINT COMPOUND (OPTIONAL).
3. WALL CONSTRUCTION: GWB OVER WOOD OR METAL STUDS.
4. FILL MATERIAL: INSTALL SYMMETRICALLY ON BOTH SIDES OF WALL. APPLY 1–1/4" (MIN.) THICKNESS OF FILL MATERIAL ON BOTH SIDES OF WALL TO COMPLETELY FILL ANNULUS AND BE FLUSH WITH THE WALL SURFACE.

   HILTI CONSTRUCTION CHEMICALS, INC. FS601 OR FS–ONE SEALANT.
5. WALL ASSEMBLY – 2 HOUR FIRE–RATED GYPSUM WALLBOARD/STUD WALL ASSEMBLY CONSISTING OF EITHER WOOD STUDS (NOM. 2" X 4" SPACED 16" O.C.) OR STEEL CHANNEL STUDS (MIN. 2–1/2" WIDE, FABRICATED FROM MIN. 25 MSG GALVANIZED STEEL, SPACED 24" O.C.).
6. MAXIMUM CABLE FILL 33% APPROXIMATELY (109) – 4 PAIR 24 AWG STATION CABLES AND 2 STRAND MULTIMODE FIBER OPTIC CABLE WITH OVER SHEATH.

A PLAN/SECTION — B FIRE STOPPING NOTES

3 W-L-3065 - CABLE THROUGH EMT SLEEVE IN WALL

SYSTEM NO. W–L 1054
F RATINGS 1 AND 2 HR
T RATING 0 HOUR
I RATING AS AMBIENT–LESS THAN 1 CFM/SQ FT
L RATING AT 400 F–4 CFM/SQ FT

1. WALL ASSEMBLY–THE 1 OR 2 HR RATED GYPSUM WALLBOARD/STUD ASSEMBLY SHALL BE CONSTRUCTED OF THE MATERIALS AND TO THE MANNER SPECIFIED TO THE INDIVIDUAL U300 OR U400 SERIES WALL AND PARTITION DESIGNS IN THE UL FIRE RESISTANCE DIRECTORY AND SHALL INCLUDE THE FOLLOWING CONSTRUCTION FEATURES:

   A. STUDS–WALL FRAMING MAY CONSIST OF EITHER WOOD STUDS OR STEEL CHANNEL STUDS. WOOD STUDS TO CONSIST OF NOM. 2 BY 4 INCH LUMBER SPACED 16 IN. OC. STEEL STUDS TO BE MIN 2–1/2 IN WIDE AND SPACED MAX. 24 IN OC. WHEN STEEL STUDS ARE USED AND THE DIAM OF OPENING EXCEEDS THE WIDTH OF STUD CAVITY, THE OPENING SHALL BE FRAMED ON ALL SIDES USING LENGTHS OF STEEL STUD INSTALLED BETWEEN THE VERTICAL STUDS AND SCREW–ATTACHED TO THE STEEL STUDS AT EACH END. THE FRAMED OPENING IN THE WALL SHALL BE 4 TO 6 IN WIDER AND 4 TO 6 IN HIGHER THAN THE DIAM OF THE PENETRATING ITEM SUCH THAT WHEN THE PENETRATING ITEM IS INSTALLED IN THE OPENING, A 2 TO 3 IN CLEARANCE IS PRESENT BETWEEN THE PENTRATING ITEM AND FRAMING ON ALL FOUR SIDES.

   B. WALLBOARD, GYPSUM* – 5/8 IN THICK, 4 FT WIDE WITH SQUARE OR TAPERED EDGES. THE GYPSUM WALLBOARD TYPE, THICKNESS, NUMBER OF LAYERS, FASTENER TYPE AND SHEET ORIENTATION SHALL BE AS SPECIFIED IN THE INDIVIDUAL U300 OR U400 SERIES DESIGN IN THE UL FIRE RESISTANCE DIRECTORY. MAX DIAM. OF OPENING IS 32–1/4 IN FOR STEEL STUD WALLS. MAX DIAM. OF OPENING IS 14–1/2 IN FOR WOOD STUD WALLS.
2. THROUGH PENETRANTS–ONE METALLIC PIPE, CONDUIT OR TUBING TO BE CENTERED WITHIN THE FIRESTOP SYSTEM. AN ONNULAR SPACE OF MIN 0 IN TO MAX 2–1/4 IN IS REQUIRED WITHIN FIRESTOP SYSTEM. PIPE, CONDUIT OR TUBING TO BE RIGIDLY SUPPORTED ON BOTH SIDES OF WALL ASSEMBLY. THE FOLLOWING TYPES AND SIZES OF METALLIC PIPES, CONDUIT OR TUBING MAY BE USED:

   A. STEEL PIPE–NOM. 30 IN DIAM. (OR SMALLER) SCHEDULE 10 (OR HEAVIER) STEEL PIPE.

   B. CONDUIT–NOM. 4 IN DIAM. (OR SMALLER) STEEL ELECTRICAL METALLIC TUBING OR 6 IN DIAM STEEL CONDUIT.

   C. COPPER TUPING–NOM 6 IN DIAM. (OR SMALLER) TYPE L (OR HEAVIER) COPPER TUBING.

   D. COPPER PIPE–NOM 6 IN DIAM. (OR SMALLER) REGULAR (OR HEAVIER) COPPER PIPE.
3. FILL, VELD OR CAVITY MATERIAL*–SEALANT–IN 1 HR FIRE–RATED ASSEMBLIES, MIN. 5/8 IN THICKNESS OF FILL MATERIAL APPLIED WITHIN ONNULUS FLUSH WITH BOTH SURFACES OF THE WALL. IN 2 HR FIRE RATED ASSEMBLIES, MIN. 1–1/4 IN THICKNESS OF FILL MATERIAL APPLIED WITHIN THE ONNULUS. FLUSH WITH BOTH SURFACES OF WALL.

   HILTI CONSTRUCTION CHEMICALS, INC. – FS – ONE SEALANT

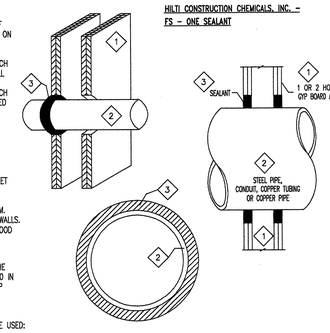

A SECTION / ISO VIEW / NOTES NTS — B FIRE STOPPING NOTES

2 W-L 1054 - FIRESTOPPING THROUGH GYPSUM WALLBOARD

SYSTEM NO. W–L 1080

F RATINGS 2 HR
T RATING 0 AND 3/4 HOUR (SEE ITEM 2)

1. WALL ASSEMBLY–THE 1 OR 2 HR RATED GYPSUM WALLBOARD/STUD WALL ASSEMBLY SHALL BE CONSTRUCTED OF THE MATERIALS AND IN THE MANNER DESCRIBED IN THE INDIVIDUAL U300 OR U400 SERIES WALL AND PARTITION DESIGNS IN THE UL FIRED RESISTANCE DIRECTORY AND SHALL INCLUDE THE FOLLOWING CONSTRUCTION FEATURES:

   A. STUDS–WALL FRAMING MAY CONSIST OF EITHER WOOD STUDS OR STEEL CHANNEL STUDS. WOOD STUDS TO CONSIST OF NOM. 2 BY 4 INCH LUMBER SPACED 16 IN. OC. WITH NOM 2 BY 4 IN LUMBER AND PLATES AND CROSS BRACES. STEEL STUDS TO BE MIN 3–5/8 IN WIDE CHANNELS SPACED MAX 24 IN OC.

   B. WALLBOARD, GYPSUM*–TWO LAYERS OF NOM 5/8 IN THICK GYPSUM WALLBOARD AS SPECIFIED IN THE INDIVIDUAL U300 OR U400 SERIES DESIGN IN THE UL FIRE RESISTANCE DIRECTORY. MAX DIAM OF OPENING IS 5–1/4 IN.

   DIAM OF CIRCULAR OPENING CUT THROUGH BOTH LAYERS OF GYPSUM WALLBOARD ON EACH SIDE OF WALLBOARD TO BE MIN. 3/4 IN TO MAX 1–1/2 IN LARGER THAN OUTSIDE DIAM OF PIPE, CONDUIT OR TUBE. SIDE EDGE OF THROUGH OPENING TO BE MIN. 3 IN FROM NEAREST STUD IN WALL CAVITY.
2. PIPE OR CONDUIT–NOM 4 IN DIAM (OR SMALLER) SCHEDULE 10 (OR HEAVIER) STEEL PIPE, NOM 4 IN DIAM (OR SMALLER) SERVICE WEIGHT (OR HEAVIER) CAST IRON SOIL PIPE, NOM 4 IN DIAM (OR SMALLER) CLASS 50 (OR HEAVIER) DUCTILE IRON PRESSURE PIPE, NOM 4 IN DIAM (OR SMALLER) STEEL CONDUIT, NOM 4 IN DIAM (OR SMALLER) STEEL ELECTRICAL METALLIC TUBING OR NOM 2 IN DIAM. TYPE L (OR HEAVIER) COPPER TUBING. WHEN STEEL OR IRON PIPE, CONDUIT OR TUBE IS USED, T RATING OF FIRESTOP SYSTEM (ITEM 2) IS 0 HOURS. A MAX OF ONE PIPE, CONDUIT, OR TUBE IS PERMITTED IN THE FIRESTOP SYSTEM. MAX ONNULAR SPACE BETWEEN PIPE, CONDUIT OR TUBE AND EDGE OF OPENING IS 3/4 IN. MIN ANNULAR SPACE BETWEEN PIPE, CONDUIT OR TUBE AND EDGE OF OPENING IS 0 IN (POINT CONTACT). PIPE, CONDUIT OR TUBE TO BE RIGIDLY SUPPORTED ON BOTH SIDES OF WALL ASSEMBLY.
3. FILL, VOID OR CAVITY MATERIAL*–PUTTY– FILL MATERIAL INSTALLED TO FILL ANNULAR SPACE THROUGHOUT THICKNESS OF GYPSUM WALLBOARD LAYERS ON EACH SIDE OF WALL ASSEMBLY. A MIN 1/4 IN DIAM BEAD OF PUTTY IS TO BE APPLIED TO THE WALL SURFACE WHERE THE PIPE, CONDUIT OR TUBE IS INSTALLED IN POINT CONTACT WITH THE EDGE OF THE THROUGH OPENING. PUTTY INSTALLED SYMMETRICALLY ON BOTH SIDES OF WALL ASSEMBLY.

   MINNESOTA MINING & MFG. CO. – TYPE MPS–2+PUTTY

   *BEARING THE UL CLASSIFICATION MARKING

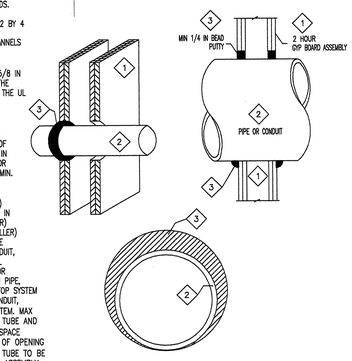

A SECTION / ISO VIEW / NOTES NTS

1 W-L 1080 - FIRESTOPPING THROUGH GYPSUM WALLBOARD

tBP architecture planning interiors management
tBP/Architecture
1000 Burnett Ave, Suite 140
Concord, CA 94520
ph: 9252466499 fx: 9252466495

architect

INFRASTRUCTURE DESIGN ASSOCIATES
1440 BROADWAY
SUITE 304 OAKLAND,
CA. 94612
PH: (510) 238–8000
FAX: (510) 238–8009

EXPIRES 12/31/04
Regis. No. 04166

consultant

agency

SAN RAMON VALLEY CENTER
CONTRA COSTA COMMUNITY COLLEGE DISTRICT
SAN RAMON, CALIFORNIA

owner

tBP project number : 20212.00
file name:
drawn by: IDA checked by:
date: 03–09–04 plot scale: 1:1

Rev:	date:	description:

drawing title: TELECOM GROUNDING AND FIRESTOPPING DETAILS
building no:
drawing no: T6.4.1
drawing of

G:\San Ramon Valley Center\DSA\Acad\T641.dwg 3–05–04 10:46:02 AM cmendoza

KEY NOTES:

1. 19' X 84" EQUIPMENT RACK.
2. 48-POSITION FIBER OPTIC SPLICE SHELF FOR SPLICING OF 12-STRAND SM FIBER OPTIC CABLE FROM MDF ROOM 180. SHELF LABEL IS SS01.
3. 48-POSITION, FIBER OPTIC TERMINATION SHELF FOR TERMINATION OF 12-STRAND SM FIBER OPTIC CABLE FROM MDF ROOM 180. SHELF LABEL IS FS01.
4. 48-PORT PATCH PANEL FOR COPPER DATA NETWORK STATION CABLE TERMINATION.
5. 6" DOUBLE SIDED VERTICAL CABLE MANAGER.
6. 15" CABLE RUNWAY @ 8-09" AFF. (TYPICAL)

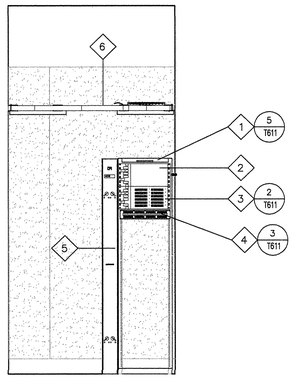

GRAPHIC SCALE: 1/2" = 1'-0"

ENLARGED PLAN, ROOM 108-EQUIPMENT - FRONT OF RACK ELEVATION 6

KEY NOTES:

1. 15" CABLE RUNWAY @ 8-09" AFF. (TYPICAL)
2. CABLE RUNWAY WALL SUPPORT.
3. CABLE RUNWAY TRIANGULAR BRACKET SUPPORT.
4. RADIUS DOWNTURN TO BE INSTALLED AT ALL INSTANCES WHERE CABLES ENTER OR EXIT THE CABLE RUNWAY AT A 90 DEGREE ANGLE FROM ABOVE OR BELOW. (TYPICAL)

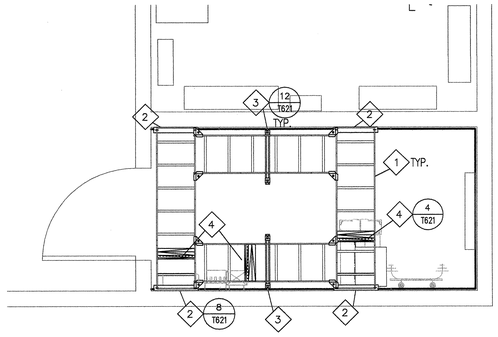

GRAPHIC SCALE: 1/2" = 1'-0"

north

ENLARGED PLAN, ROOM 108-15" CABLE RUNWAY @ 8'-09" AFF. 4

GENERAL NOTES:

A. ELEVATION VIEWS SHOWN FOR LOCATING AND LABELING OF TELECOM COPPER AND FIBER OPTIC TERMINATION HARDWARE AND RACK ACCESSORIES ONLY. NOT ALL LAYERS OF CABLE MANAGEMENT SUPPORT DEVICES ARE SHOWN ON ELEVATION VIEWS.

B. THE CONTRACTOR IS RESPONSIBLE FOR PROVIDING SEISMIC DESIGN CALCULATIONS AND SEISMIC DESIGN DRAWINGS PREPARED BY THE CONTRACTOR'S CALIFORNIA CERTIFIED STRUCTURAL ENGINEER FOR COORDINATION AND APPROVAL BY THE OWNER'S REPRESENTATIVE PRIOR TO FABRICATING OR INSTALLING ANY SUPPORTS FOR TELECOM EQUIPMENT. ANY PROPOSED REINFORCEMENT TO BE THE RESPONSIBILITY OF THE CONTRACTOR.

C. COORDINATE SEISMIC SUPPORT DESIGN WITH ARCHITECTURAL, STRUCTURAL, MECHANICAL, ELECTRICAL, PLUMBING, FIRE PROTECTION, AND OTHER TRADES.

D. THE CONTRACTOR SHALL VERIFY ALL CRITICAL DIMENSIONS WITH THE ARCHITECTURAL DRAWINGS.

NOTES 2

KEY NOTES:

1. 489-TYPE MULTIPAIR PROTECTOR PANEL TO PROVIDE FOR 100-PAIR COPPER ENTRANCE CABLE.
2. 188-STYLE VERTICAL CABLE MANAGER FOR 110-BLOCKS.
3. 300-PAIR, 110-BLOCKS FOR TERMINATION OF COPPER VOICE CABLES.
4. 6" DOUBLE SIDED VERTICAL CABLE MANAGER.
5. TELECOM COPPER GROUND BAR.
6. 15" CABLE RUNWAY @ 8-09" AFF. (TYPICAL)

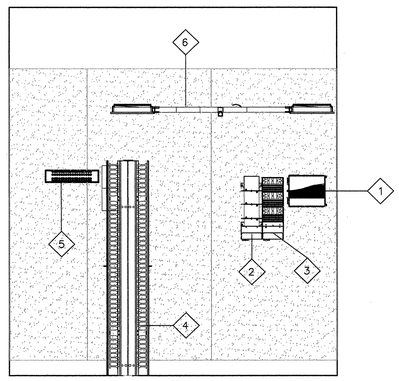

GRAPHIC SCALE: 1/2" = 1'-0"

ENLARGED PLAN, ROOM 108-EQUIPMENT - SOUTH WALL ELEVATION 5

KEY NOTES:

1. (1) 489-TYPE MULTIPAIR PROTECTOR PANEL TO PROVIDE FOR 100-PAIR COPPER ENTRANCE CABLE.
2. 188-STYLE VERTICAL CABLE MANAGER FOR 110-BLOCKS.
3. 300-PAIR, 110-BLOCKS FOR TERMINATION OF COPPER VOICE CABLES.
4. 6" DOUBLE SIDED VERTICAL CABLE MANAGER.
5. 19"X84" EQUIPMENT RELAY RACK.
6. TELECOM COPPER GROUND BAR.
7. PLYWOOD BACKBOARD @ +0'-06" TO 10'-00" AFF. (TYPICAL)

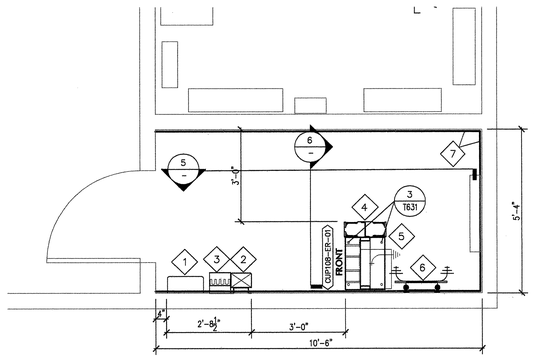

GRAPHIC SCALE: 1/2" = 1'-0"

north

ENLARGED PLAN, ROOM 108-EQUIPMENT FLOOR PLAN 3

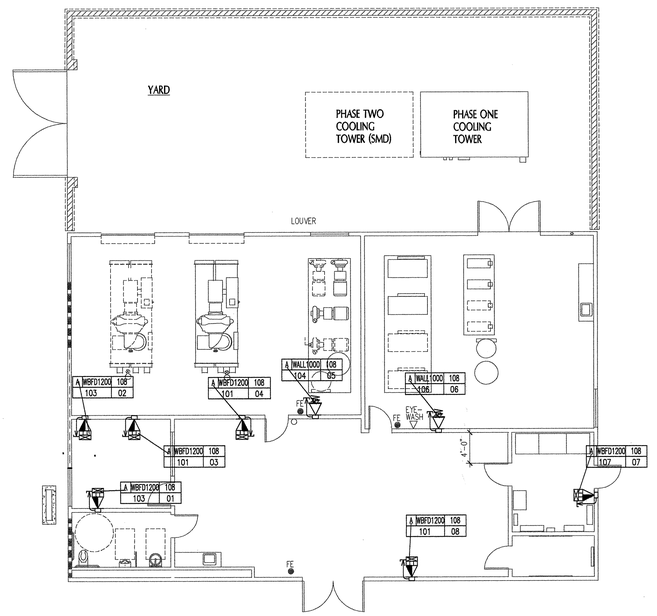

GRAPHIC SCALE: 1/8" = 1'-0"

north

CUP BUILDINGS-TELECOM OUTLETS 1

tBP
architecture
planning
interiors
management

tBP/Architecture
1000 Burnett Ave, Suite 140
Concord, CA 94520
ph: 925.246.6491 fx: 925.246.6495

architect

INFRASTRUCTURE DESIGN ASSOCIATES
1440 BROADWAY
SUITE 304 OAKLAND,
CA. 94612
PH: (510) 238-8000
FAX: (510) 238-8009

EXPIRES 12/31/04
Regis. No. 04166

consultant

IMPLEMENTATION SETUP BY THE STATE ARCHITECT OFFICE OF REGULATION SERVICES
APPL NO. 125719
AC ELEC SS
DATE

agency

SAN RAMON VALLEY CENTER
CONTRA COSTA COMMUNITY COLLEGE DISTRICT
SAN RAMON, CALIFORNIA

owner

tBP project number : 20212.00
file name:
drawn by: IDA checked by:
date: 03-09-04 plot scale: 1:1

Rev:	date:	description:

drawing title: CENTRAL UTILITY PLAN (CUP) BUILDING TELECOM OUTLETS & TELECOM ROOM ENLARGED PLAN

building no:

drawing no: T10.2.1

drawing of

G:\San Ramon Valley Center\DSA\Acad\T10.2.1CP.dwg 3-05-04 11:17:16 AM cmendoza

237

KEY NOTES:

1. 19" X 84" EQUIPMENT RACK.
2. 48-POSITION FIBER OPTIC SPLICE SHELF FOR SPLICING OF 12-STRAND SM FIBER OPTIC CABLE FROM MDF ROOM 180. SHELF LABEL IS SS01.
3. 48-POSITION, FIBER OPTIC TERMINATION SHELF FOR TERMINATION OF 12-STRAND SM FIBER OPTIC CABLE FROM MDF ROOM 180. SHELF LABEL IS FS01.
4. 48-PORT PATCH PANEL FOR COPPER DATA NETWORK STATION CABLE TERMINATION.
5. 6" DOUBLE SIDED VERTICAL CABLE MANAGER.
6. 15" CABLE RUNWAY @ 8-09" AFF. (TYPICAL)

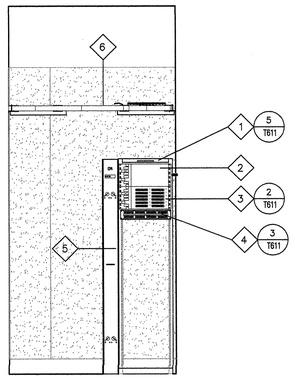

GRAPHIC SCALE: 1/2" = 1'-0"

ENLARGED PLAN, ROOM 108-EQUIPMENT - FRONT OF RACK ELEVATION 6

KEY NOTES:

1. 15" CABLE RUNWAY @ 8-09" AFF. (TYPICAL)
2. CABLE RUNWAY WALL SUPPORT.
3. CABLE RUNWAY TRIANGULAR BRACKET SUPPORT.
4. RADIUS DOWNTURN TO BE INSTALLED AT ALL INSTANCES WHERE CABLES ENTER OR EXIT THE CABLE RUNWAY AT A 90 DEGREE ANGLE FROM ABOVE OR BELOW. (TYPICAL)

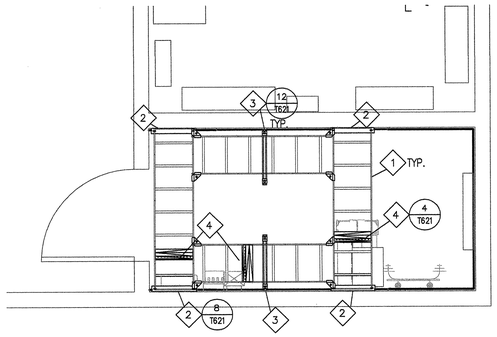

GRAPHIC SCALE: 1/2" = 1'-0"

north

ENLARGED PLAN, ROOM 108-15" CABLE RUNWAY @ 8'-09" AFF. 4

GENERAL NOTES:

A. ELEVATION VIEWS SHOWN FOR LOCATING AND LABELING OF TELECOM COPPER AND FIBER OPTIC TERMINATION HARDWARE AND RACK ACCESSORIES ONLY. NOT ALL LAYERS OF CABLE MANAGEMENT SUPPORT DEVICES ARE SHOWN ON ELEVATION VIEWS.

B. THE CONTRACTOR IS RESPONSIBLE FOR PROVIDING SEISMIC DESIGN CALCULATIONS AND SEISMIC DESIGN DRAWINGS PREPARED BY THE CONTRACTOR'S CALIFORNIA CERTIFIED STRUCTURAL ENGINEER FOR COORDINATION AND APPROVAL BY THE OWNER'S REPRESENTATIVE PRIOR TO FABRICATING OR INSTALLING ANY SUPPORTS FOR TELECOM EQUIPMENT. ANY PROPOSED REINFORCEMENT TO BE THE RESPONSIBILITY OF THE CONTRACTOR.

C. COORDINATE SEISMIC SUPPORT DESIGN WITH ARCHITECTURAL, STRUCTURAL, MECHANICAL, ELECTRICAL, PLUMBING, FIRE PROTECTION, AND OTHER TRADES.

D. THE CONTRACTOR SHALL VERIFY ALL CRITICAL DIMENSIONS WITH THE ARCHITECTURAL DRAWINGS.

NOTES 2

KEY NOTES:

1. 489-TYPE MULTIPAIR PROTECTOR PANEL TO PROVIDE FOR 100-PAIR COPPER ENTRANCE CABLE.
2. 188-STYLE VERTICAL CABLE MANAGER FOR 110-BLOCKS.
3. 300-PAIR, 110-BLOCKS FOR TERMINATION OF COPPER VOICE CABLES.
4. 6" DOUBLE SIDED VERTICAL CABLE MANAGER.
5. TELECOM COPPER GROUND BAR.
6. 15" CABLE RUNWAY @ 8-09" AFF. (TYPICAL)

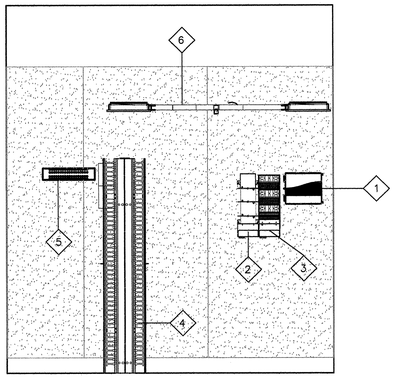

GRAPHIC SCALE: 1/2" = 1'-0"

ENLARGED PLAN, ROOM 108-EQUIPMENT - SOUTH WALL ELEVATION 5

KEY NOTES:

1. (1) 489-TYPE MULTIPAIR PROTECTOR PANEL TO PROVIDE FOR 100-PAIR COPPER ENTRANCE CABLE.
2. 188-STYLE VERTICAL CABLE MANAGER FOR 110-BLOCKS.
3. 300-PAIR, 110-BLOCKS FOR TERMINATION OF COPPER VOICE CABLES.
4. 6" DOUBLE SIDED VERTICAL CABLE MANAGER.
5. 19"X84" EQUIPMENT RELAY RACK.
6. TELECOM COPPER GROUND BAR.
7. PLYWOOD BACKBOARD @ +0'-06" TO 10'-00" AFF. (TYPICAL)
8. AREA IN FLOOR SLAB BLOCKED OUT FOR OSP ENTRANCE CONDUITS.
9. PROVIDE 15" VERTICAL CABLE RUNWAY MOUNTED TO THE WALL AT ALL INSTANCE WHERE CONDUITS ENTER OR EXIT THE DF ROOM IN THE FLOOR SLAB.

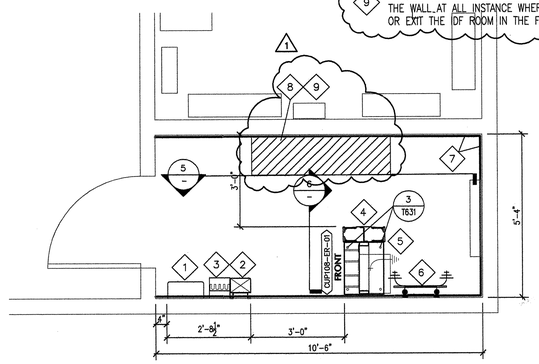

GRAPHIC SCALE: 1/2" = 1'-0"

north

ENLARGED PLAN, ROOM 108-EQUIPMENT FLOOR PLAN 3

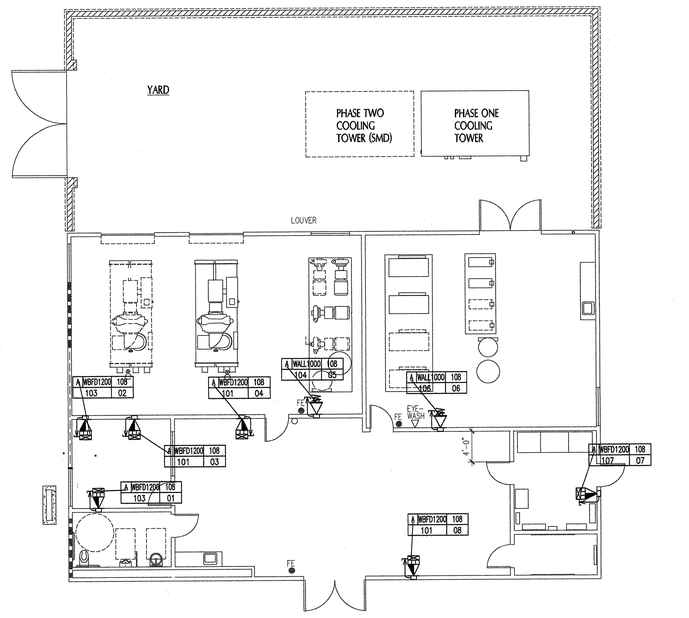

GRAPHIC SCALE: 1/8" = 1'-0"

north

CUP BUILDINGS-TELECOM OUTLETS 1

tBP architecture planning interiors management

tBP/architecture
1000 Burnett Ave, Suite 140
Concord, CA 94520
ph: 925.246.6419 fx: 925.246.6495

architect

INFRASTRUCTURE DESIGN ASSOCIATES
1440 BROADWAY
SUITE 304 OAKLAND,
CA 94612
PH: (510) 238-8000
FAX: (510) 238-8009

EXPIRES 12/31/04
Regis. No. 04166

consultant

APPROVED
BUILDING INSPECTIONS STAMP
DEPARTMENT OF ARCHITECTS
OFFICE OF REGULATION SERVICES
APPL. NO. 160719
MARK BY DATE
DATE 5-27-04

agency

SAN RAMON VALLEY CENTER

CONTRA COSTA COMMUNITY COLLEGE DISTRICT

SAN RAMON, CALIFORNIA

owner

tBP project number :	20212.00
file name:	
drawn by: IDA	checked by:
date: 03-09-04	plot scale: 1:1

Rev.	date:	description:
1	05-26-04	Design Clarification

drawing title: CENTRAL UTILITY PLAN (CUP) BUILDING TELECOM OUTLETS & TELECOM ROOM ENLARGED PLAN

building no.:

drawing no.: T10.2.1 CP

drawing of

G:\San Ramon Valley Center\Bid Set\Acad\T10.2.1CP.dwg 5-27-04 02:33:37 PM cmendoza