CODE COMPLIANCE

CHAPTER 4 PART 1, TITLE 24 C.C.R. ADMINISTRATIVE REQUIREMENTS (PARTIAL LISTING ONLY)

1. A COPY OF PARTS 1 AND 2, TITLE 24, C.C.R. SHALL BE KEPT ON THE JOB SITE AT ALL TIMES.
2. ALL CHANGE ORDERS AND ADDENDA TO BE SIGNED BY THE ARCHITECT AND THE OWNER AND APPROVED BY DSA. CHANGE ORDERS ARE NOT VALID UNTIL APPROVED BY DSA SECTION 4-338, PART 1, TITLE 24.
3. ALL TESTS TO CONFORM TO THE REQUIREMENTS OF SECTION 4-335, PART 1, TITLE 24, AND APPROVED T&I SHEET
4. TESTS OF MATERIALS AND TESTING LABORATORY SHALL BE IN ACCORDANCE WITH SECTION 4-335 OF PART 1,TITLE 24 AND THE DISTRICT SHALL EMPLOY AND PAY THE LABORATORY. COSTS OF RE-TEST MAY BE BACK CHARGED TO THE CONTRACTOR. TESTING LABORATORY SHALL BE APPROVED BY DSA.
5. DSA SHALL BE NOTIFIED AT THE START OF CONSTRUCTION AND PRIOR TO THE PLACEMENT OF CONCRETE PER SECTION 4-331, PART 1, TITLE 24.
6. INSPECTOR SHALL BE APPROVED BY DSA. INSPECTOR SHALL BE IN ACCORDANCE WITH SECTION 4-333(B). THE DUTY OF THE INSPECTOR SHALL BE IN ACCORDANCE WITH SECTION 4-342, PART 1, TITLE 24.
7. SUPERVISION OF CONSTRUCTION BY DSA SHALL BE IN ACCORDANCE WITH SECTION 4-334, PART 1, TITLE 24.
8. CONTRACTOR, INSPECTOR, ARCHITECT, AND ENGINEERS SHALL SUBMIT VERIFIED REPORTS (FORM SS5-6) IN ACCORDANCE WITH SECTION 4-336 AND 4-343, PART 1, TITLE 24.
9. THE ARCHITECT AND THE STRUCTURAL ENGINEER SHALL PERFORM THEIR DUTIES IN ACCORDANCE WITH SECTION 4-333(A) AND 4-341, PART 1, TITLE 24.
10. THE CONTRACTOR SHALL PERFORM HIS DUTIES IN ACCORDANCE WITH SECTION 4-343, PART 1, TITLE 24.
11. THE INTENT OF THE DRAWINGS AND SPECIFICATIONS IS TO CONSTRUCT THE PROJECT IN ACCORDANCE WITH TITLE 24, C.C.R. SHOULD ANY CONDITIONS DEVELOP NOT COVERED BY THE CONTRACT DOCUMENTS WHEREIN THE FINISHED WORK WILL NOT COMPLY WITH TITLE 24, C.C.R., A CONSTRUCTION CHANGE DIRECTIVE (CCD) DETAILING AND SPECIFYING THE REQUIRED WORK SHALL BE SUBMITTED TO AND APPROVED BY THE DIVISION OF THE STATE ARCHITECT BEFORE PROCEEDING WITH THE WORK.

PARTIAL LIST OF APPLICABLE CODES as of January 1, 2017

2016	BUILDING STANDARDS ADMINISTRATIVE CODE, PART 1, TITLE 24, C.C.R.
2016	CALIFORNIA BUILDING CODE (CBC), PART 2, TITLE 24, C.C.R. (2015 INTERNATIONAL BUILDING CODE WITH 2016 CALIFORNIA AMENDMENTS)
2016	CALIFORNIA ELECTRIC CODE (CEC), PART 3, TITLE 24, C.C.R. (2014 NATIONAL ELECTRIC CODE WITH 2016 CALIFORNIA AMENDMENTS)
2016	CALIFORNIA MECHANICAL CODE (CMC), PART 4, TITLE 24, C.C.R. (2015 UNIFORM MECHANICAL CODE WITH 2016 CALIFORNIA AMENDMENTS)
2016	CALIFORNIA PLUMBING CODE (CPC), PART 5, TITLE 24, C.C.R. (2015 UNIFORM PLUMBING CODE WITH 2016 CALIFORNIA AMENDMENTS)
2016	CALIFORNIA ENERGY CODE (CENC), PART 6, TITLE 24, C.C.R.
2016	CALIFORNIA FIRE CODE (CFC), PART 9, TITLE 24, C.C.R. (2015 INTERNATIONAL FIRE CODE WITH 2016 CALIFORNIA AMENDMENTS)
CCR TITLE-19, REGULATIONS OF THE STATE FIRE MARSHAL	

PARTIAL LIST OF APPLICABLE STANDARDS (as referenced in 2017 CBC/CFC)

NFPA 13	AUTOMATIC SPRINKLER SYSTEMS, 2016 EDITION CA AMENDED)
NFPA 14	STANDPIPE & HOSE SYSTEMS, 2013 EDITION (CA AMENDED)
NFPA 17A	WET CHEMICAL EXTINGUISHING SYSTEMS, 2013 EDITION
NFPA 20	STATIONARY FIRE PUMPS FOR FIRE PROTECTION, 2016 EDITION
NFPA 24	PRIVATE FIRE SERVICE MAINS, 2016 EDITION (CA AMENDED)
NFPA 25	INSPECTION, TESTING AND MAINTENANCE OF WATER BASED FIRE PROTECTION SYSTEMS, 2013 CALIFORNIA EDITION
NFPA 37	INSTALLATION AND USE OF STATIONARY COMBUSTION ENGINES AND GAS TURBINES, 2015 EDITION
NFPA 72	NATIONAL FIRE ALARM AND SIGNALING CODE, 2016 EDITION (CA AMENDED)
NFPA 80	FIRE DOORS AND OTHER OPENING PROTECTIVES, 2016 EDITION
NFPA 110	EMERGENCY AND STANDBY POWER SYSTEMS, 2016 EDITION
NFPA 170	STANDARD FOR FIRE SAFETY AND EMERGENCY SYMBOLS, 2015 EDITION
NFPA 2001	CLEAN AGENT FIRE EXTINGUISHING SYSTEMS, 2015 EDITION
ICC 300	STANDARDS ON BLEACHERS, FOLDING AND TELESCOPING SEATING, AND GRANDSTANDS 2012 EDITION

PARTIAL LIST OF APPLICABLE STANDARDS

AISC MANUAL OF STEEL CONSTRUCTION
ACI 318-14 CODE & COMMENTARY
NATIONAL REFERENCE STANDARDS
2010 ADA STANDARDS FOR ACCESSIBLE DESIGN

DIVISION OF THE STATE ARCHITECT REQUIREMENTS

1. ADDENDA AND CHANGES AS PER SECTION 4-338.
2. INSPECTOR APPROVED BY DSA.
3. INSPECTOR AND CONTINUOUS INSPECTION OF WORK PER SECTION 4-333(B) AND 4-342.
4. TESTS AND TESTING LABORATORY PER SECTION 4-335 (OWNER SHALL PAY THE TESTING LABORATORY).
5. SPECIAL INSPECTION PER SECTION 4-333(C).
6. CONTRACTOR SHALL SUBMIT VERIFIED REPORT PER SECTION 4-336 & 4-343(C).
7. ADMINISTRATION OF CONSTRUCTION PER PART 1, TITLE 24, C.C.R.
8. DUTIES OF ARCHITECT, STRUCTURAL ENGINEER, OR PROFESSIONAL ENGINEER PER SECTION 4-333(A) AND 4-341.
9. DUTIES OF CONTRACTOR PER SECTION 4-343.
10. VERIFIED REPORTS PER SECTION 4-336.
11. A COPY OF PART 1 & 2 OF TITLE 24, SHALL BE KEPT AND AVAILABLE IN FIELD DURING CONSTRUCTION.
12. DSA SHALL BE NOTIFIED ON START OF CONSTRUCTION PER SECTION 4-331.
13. SUPERVISION BY DSA PER SECTION 4-343.
14. DSA IS NOT SUBJECT TO ARBITRATION.

CAMPUS MAP

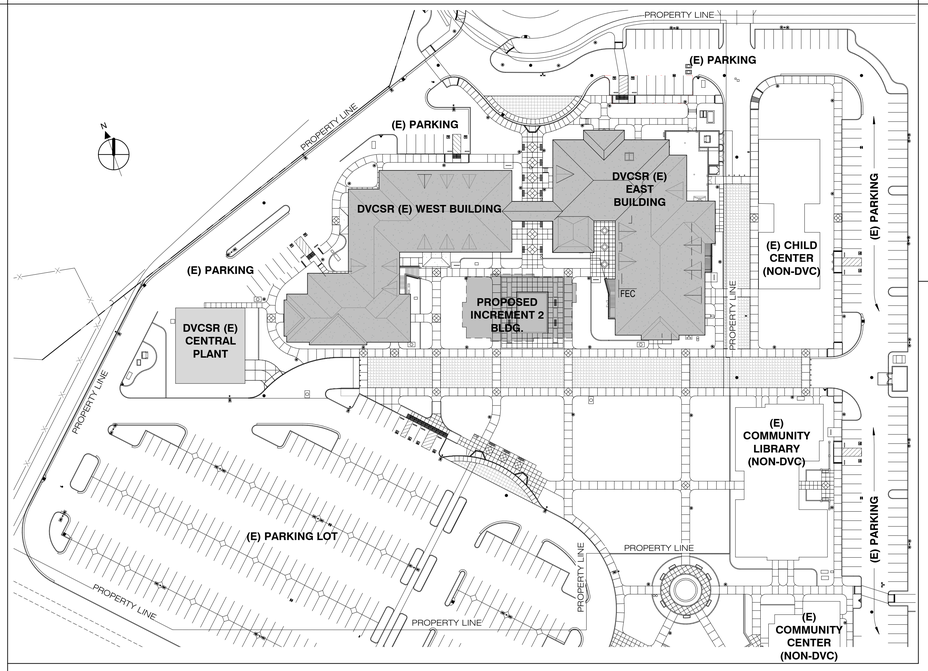

BID ALTERNATES

PRIOR DSA APPLICATION NUMBERS

ALL PROJECTS LISTED HAVE BEEN CERTIFIED:

1. SITE IMPROVEMENTS: 01-106062
2. EDUCATIONAL BUILDINGS 7 CENTRAL PLANT: 01-105719

DEFERRED SUBMITTALS

1. STOREFRONTS - PER DSA IR 24-2

DVC SAN RAMON CAMPUS EXPANSION & RENOVATION

1690 Watermill Rd.
San Ramon, CA 94582
D-4002 - INCREMENT 1 - RENOVATION 4/26/19

NOLL & TAM ARCHITECTS
729 Heinz Avenue
Berkeley, CA 94710
tel 510.542.2200
fax 510.542.2201

ARCHITECTS SEAL

LICENSED ARCHITECT
CHRISTOPHER NOLL
No. C15916
REN. 12-31-21
STATE OF CALIFORNIA

APPROVALS

FILE NUMBER: 07-C1

DIVISION OF THE STATE ARCHITECT
APP# 01-117630
ACS_____ FLS_____ SSS_____
Date:

RECORD DWGS
NOLL AND TAM ARCHITECTS
BERKELEY, CALIFORNIA
DATE 10/11/21 BY: PD
REFER TO CONTRACTOR'S AS-BUILTS DRAWINGS FOR ADDITIONAL INFORMATION

PROJECT TITLE
CONTRA COSTA CCD
D-4002
DVC SAN RAMON CAMPUS EXPANSION & RENOVATION
1690 Watermill Rd.
San Ramon, CA 94582

ISSUE TITLE
INCREMENT 1 - RENOVATION

ISSUE DATE	4/26/19
NOLL & TAM JOB NUMBER	21630

REVISIONS

	DATE	DESCRIPTION

SHEET TITLE
COVER SHEET

SHEET NUMBER
G0.00.1

ARCHITECT'S STATEMENT

STATEMENT OF GENERAL CONFORMANCE

FOR ARCHITECTS/ENGINEERS WHO UTILIZE PLANS, INCLUDING BUT NOT LIMITED TO SHOP DRAWINGS, PREPARED BY OTHER LICENSED DESIGN PROFESSIONALS AND/OR CONSULTANTS

(Application No. 01-117630 File No. 7-C1)

☒ The drawings or sheets listed on the cover or sheet index
☐ This drawing, page of specifications/calculations

have been prepared by other design professionals or consultants who are licensed and/or authorized to prepare such drawings in this state. It has been examined by me for:

1) design intent and appears to meet the appropriate requirements of Title 24, California Code of Regulations and the project specifications prepared by me, and
2) coordination with my plans and specifications and is acceptable for incorporation into the construction of this project.

The Statement of General Conformance "shall not be construed as relieving me of my rights, duties, and responsibilities under Sections 17302 and 81138 of the Education Code and Sections 4-336, 4-341 and 4-344" of the Title 24, Part 1. (Title 24, Part 1, Section 4-317 (b))

I certify that:
☒ All drawings or sheets listed on the cover or index sheet
☐ This drawing or page

☒ is/are in general conformance and
☒ have been coordinated

Signature — Date: 10/25/18

Architect or Engineer designated to be in general responsible charge

Chris Noll, Principal
Print Name

15916 — License Number
12/31/19 — Expiration Date

LOCAL STREET MAP

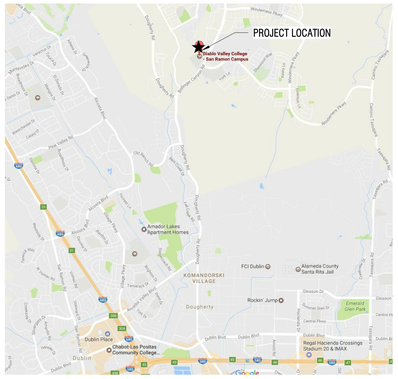

PROJECT SCOPE: INCREMENT 2

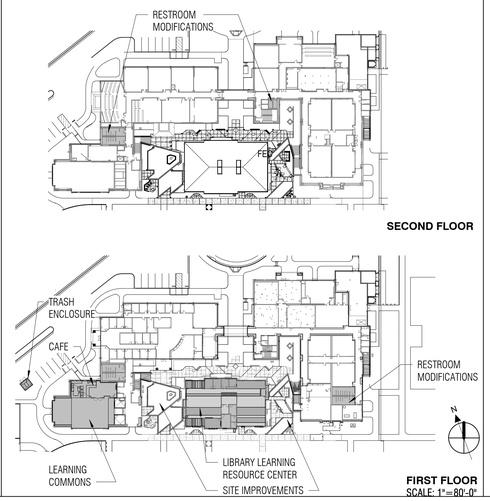

PROJECT SCOPE: INCREMENT 1

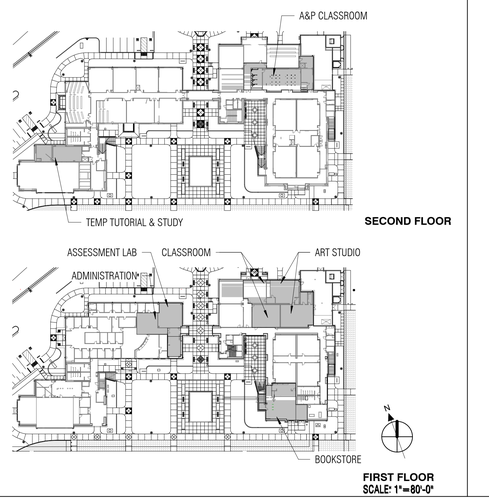

PROJECT SUMMARY

CONTRA COSTA COMMUNITY COLLEGE DISTRICT PROPOSES IMPROVEMENTS OCCURING IN TWO INCREMENTS AT ITS DIABLO VALLEY COLLEGE IN SAN RAMON. THE WORK INCLUDES RENOVATIONS TO PORTIONS OF THE EXISTING INSTRUCTIONAL BUILDINGS AS WELL AS THE CONSTRUCTION OF A NEW 6600 SF LIBRARY LEARNING RESOURCE CENTER AND SITE IMPROVEMENTS. THE CONSTRUCTION OF INCREMENT 1 WORK IS SLATED AT THE START OF THE 2019 CALENDAR YEAR. INCREMENT 2 WORK WILL BEGIN LATER IN 2019.

INCREMENT 1 WORK INCLUDES, BUT IS NOT LIMITED TO:
1. RENOVATIONS TO CLASSROOMS AS INDICATED IN THE INCREMENT 1 PROJECT SCOPE DIAGRAMS.
2. RENOVATIONS AT EXISTING EAST BUILDING FOR RELOCATION OF BOOKSTORE
3. MODIFICATIONS TO EXISTING WALLS, NEW INTERIOR WALLS, DOORS, INTERIOR GLAZING, CEILINGS, AND FINISHES, COMPLIANCE WITH CURRENT LIFE SAFETY CODES, AND MODIFICATION TO BUILDING SYSTEMS (HVAC, ELECTRICAL, LIGHTING, FIRE ALARM, FIRE PROTECTION, PLUMBING, AND TELECOMMUNICATIONS) FOR THE RENOVATION SCOPE.
4. PARKING LOT AREA MODIFICATIONS

INCREMENT 2 WORK INCLUDES BUT IS NOT LIMITED TO:
1. RENOVATIONS AT THE LEARNING COMMONS
2. RENOVATIONS AT THE EXISTING WEST BUILDING FOR A NEW CAFE INCLUDING SITE IMPROVEMENTS FOR A GREASE INTERCEPTOR AND TRASH/RECYCLE/COMPOST ENCLOSURE AS INDICATED IN THE INCREMENT 2 PROJECT SCOPE DIAGRAM.
3. ACCESSIBILITY UPGRADES TO EXISTING RESTROOMS AS NEEDED.
4. CONSTRUCTION OF A NEW 6600 SF BUILDING - LIBRARY LEARNING RESOURCE CENTER
5. SITE IMPROVEMENTS AT THE NEW BUILDING INCLUDING SUBGRADE PREPARATION, REROUTING OF EXISTING UNDERGROUND UTILITIES, EXTENSION OF UTILITIES TO SERVE THE NEW BUILDING, AND LANDSCAPE IMPROVEMENTS.
6. NO PARKING IS PROPOSED AS PART OF INCREMENT 2

CONTRACTOR WILL BE RESPONSIBLE FOR PREPPING ALL AREAS FOR NEW SCOPE OF WORK INCLUDING PATCHING AND REPAIRING EXISTING CONDITIONS WHERE AFFECTED BY ANY AND ALL DEMOLITION WORK.

THE WORK TO BE PERFORMED UNDER THIS CONTRACT INCLUDES THE FURNISHING OF ALL LABOR, MATERIALS, EQUIPMENT, TRANSPORTATION, SERVICES, PERMITS, TEMPORARY CONTROLS AND CONSTRUCTION FACILITIES, AND ALL GENERAL CONDITIONS, SEISMIC REQUIREMENTS, GENERAL REQUIREMENTS AND INCIDENTALS REQUIRED TO COMPLETE THE WORK ON THE PROJECT IN ITS ENTIRETY AS DESCRIBED IN THE CONTRACT DOCUMENTS.

PROJECT TEAM

Cost Estimator
mack5
1900 Powell Street Suite 470
Emeryville CA 94609
Tel: (510) 595-3020

Food Service Design
RAS Design
649 Main Street
Martinez, CA 94553
Tel: (925) 372-0222

Telecom
CMSalter
130 Sutter St, Flr 5
San Francisco, CA 94104
Tel: (415)470-5436

MEP
Interface Engineering Inc.
135 Main St. Ste 400
San Francisco, CA 94105
Tel: (415) 489-7240

Structural
Walter P. Moore and Associates Inc.
596 Market Street Suite 2130
San Francisco CA 94105
Tel: (415) 963-6303

Landscape
Merrill Morris Partners, Inc.
249 Front Street
San Francisco, CA 94111
Tel: (415) 291-8960

Civil
BKF Engineers
1646 N. California Blvd, #400
Walnut Creek, CA 94596
Tel: (925) 940-2200

Architect
Noll & Tam Architects
729 Heinz Ave
Berkeley, CA 94710
Tel: 510.542.2200
Fax: 510.542.2201

Client
Contra Costa Community College District
500 Court St.
Martinez, CA 94553
Tel: (925) 299-6842

10/11/2021 2:38:26 PM C:\Users\phan.dung\Documents\Revit Locals\DVCSR Expansion_ Central 2020_phan.dung@nollandtam.com.rvt

GENERAL NOTES

1. ALL CONSTRUCTION MATERIALS AND WORKMANSHIP SHALL CONFORM TO THE PROJECT SPECIFICATIONS.

2. ALL WORK SHALL MEET OR EXCEED THE MINIMUM STANDARDS OF THE MOST CURRENT RULES AND REGULATIONS OF ALL APPLICABLE STATE AND/OR LOCAL CODES, LAWS, AND ORDINANCES.

3. INFORMATION CONTAINED WITHIN THESE DOCUMENTS SHALL NOT BE CONSTRUED TO PERMIT WORK NOT CONFORMING TO THE APPLICABLE CODES.

4. CONTRACTOR SHALL EXAMINE THE DOCUMENTS AND SHALL NOTIFY THE ARCHITECT OF ANY DISCREPANCIES WHICH MAY BE FOUND PRIOR TO THE START OF WORK.

5. CONTRACTOR SHALL REVIEW ALL DOCUMENTS TO COORDINATE W/ THE (E) BLDG CONDITIONS. ANY VARIATIONS AND DISCREPANCIES THAT ARISE IN THIS REVIEW ARE TO BE BROUGHT IMMEDIATELY TO THE ARCHITECT'S ATTENTION.

6. THE CONTRACTOR AND ALL SUBCONTRACTORS ARE REQUIRED TO VISIT AND INSPECT THE SITE PRIOR TO CONSTRUCTION OR ORDERING ANY MATERIALS.

7. ALL DETAILS, SCHEDULES, ADDENDA AND SPECIFICATIONS BOUND SEPARATELY ARE A PART OF THE CONTRACT DOCUMENTS.

8. ITEMS MARKED "NIC" ARE NOT IN CONTRACT. SUCH ITEMS ARE INCLUDED IN THE DOCUMENTS WHEN CONTRACTOR'S COORDINATION IS REQUIRED OR FOR CLARIFICATION OF PROJECT LIMITS.

9. DIMENSIONS:
   A. IN NO CASE SHALL WORKING DIMENSIONS BE SCALED FROM THE DRAWINGS. IF DIMENSIONS ARE NOT SHOWN AND CANNOT BE DETERMINED FROM LAYOUT CRITERIA PROVIDED, OR IF DISCREPANCIES ARE NOTED, NOTIFY ARCHITECT FOR RESOLUTION.
   B. OPENINGS: DOOR DIMENSIONS ARE TO THE FACE OF JAMB, UON. LOCATE UNDIMENSIONED DOORS 4" FROM FINISHED FACE OF INTERSECTING PARTITION TO HINGE EDGE EDGE OF DOOR. REFER TO DETAILS FOR LOCATION OF DIMENSIONS OF WINDOWS AND OTHER OPENINGS
   C. ALL DIMENSIONS TO WALLS ARE TO THE FACE OF STUD, FACE OF CONCRETE, OR FACE OF CONCRETE MASONRY, UON.
   D. GRID DIMENSIONS ARE TO CENTERLINE OF STRUCTURAL GRID LINE, UON
   E. ITEMS THAT ARE LOCATED ON A GRID LINE OR OTHERWISE LOCATED BY MODULE, MULLION LAYOUT, SCHEDULE, OR DETAIL ARE NOT OTHERWISE DIMENSIONED.
   F. ELEVATIONS REFER TO THE TOP OF THE SLAB ON GRADE DATUM. FLOOR & ROOF ELEVATIONS NOTED ARE TO TOP OF CONCRETE SLAB OR STRUCTURAL DECK, UON. BUILDING HEIGHT ELEVATIONS ARE TO TOP OF FRAMING, UON.
   G. CEILING HEIGHT DIMENSIONS ARE FROM FINISHED FLOOR TO FINISHED FACE OF CEILING, UON.
   H. ALL DIMENSIONS SHALL BE VERIFIED IN THE FIELD BY GENERAL CONTRACTOR AND ALL SUBCONTRACTORS PRIOR TO PROCEEDING WITH CONSTRUCTION.
   I. COORDINATE WITH EQUIPMENT CONTRACTORS FOR ROUGH-IN DIMENSIONS AND TEMPLATES.
   J. ALL DIMENSIONS NOTED "CLEAR" OR "CLR" MUST BE STRICTLY MAINTAINED. "CLEAR" MEANS DIMENSION FROM FACE OF FINISH TO FACE OF FINISH OR OBJECT.
   K. ALL DIMENSIONS NOTED "VERIFY" OR "VIF" ARE TO BE CHECKED BY THE CONTRACTOR PRIOR TO CONSTRUCTION. ANY VARIANCE FROM THE REQUIRED DIMENSIONS MUST BE BROUGHT IMMEDIATELY TO THE ARCHITECT'S ATTENTION.
   L. DIMENSIONS ARE BASED UPON SPECIFIED MATERIALS AND EQUIPMENT. SUBSTITUTIONS MAY EFFECT DIMENSIONS. SUBSTITUTION REQUESTS SHALL INDICATE THE IMPACT OF THE SUBSTITUTIONS UPON DIMENSIONS AND CLEARANCES.
   M. DIMENSIONS FOR EXISTING CONDITIONS ARE TO BE FIELD VERIFIED BY CONTRACTOR. CONTRACTOR SHALL NOTIFY ARCHITEC OF ANY DISCREPANCIES.

10. DETAILS MARKED "TYPICAL" SHALL APPLY IN ALL CASES, UON.

11. WHERE NO SPECIFIC DETAIL IS SHOWN, THE FRAMING OR CONSTRUCTION SHALL BE IDENTICAL OR SIMILAR TO THAT INDICATED FOR LIKE CASES OF CONSTRUCTION ON THE PROJECT.

12. EXISTING CONDITIONS TO REMAIN, UNLESS OTHERWISE NOTED. PROTECT ALL (E) BUILDING CONDITIONS TO REMAIN, INCLUDING BUT NOT LIMITED TO WALLS, DOORS, CEILINGS, AND GLAZING.

13. THE CONTRACTOR SHALL MEET WITH THE ARCHITECT PRIOR TO THE START OF DEMOLITION TO NOTE WHAT ITEMS, IF ANY, ARE TO BE SALVAGED OR REUSED. REFER TO DIVISION 2 OF THE PROJECT SPECIFICATIONS.

14. THE DRAWINGS INDICATE THE GENERAL EXTENT OF (N) CONSTRUCTION NECESSARY FOR THE WORK, BUT ARE NOT INTENDED TO BE ALL-INCLUSIVE. ALL DEMO AND (N) WORK NECESSARY FOR A FINISHED JOB, IN ACCORDANCE w/ THE INTENTIONS OF THE CONTRACT DOCUMENTS, IS INCLUDED REGARDLESS OF WHETHER SHOWN IN THE CONTRACT DOCUMENTS. THIS IS TO INCLUDE, BUT IS NOT LIMITED TO; SELECTIVE REMOVAL, REPLACEMENT, PATCHING & REPAIR OF (E) ASSEMBLIES AND FINISHES TO MATCH (E) ADJACENT ASSEMBLIES AND FINISHES AS REQUIRED TO CONNECT (N) UTILITIES AND (N) BUILDING ELEMENTS TO (E) BUILDING STRUCTURE AND BUILDING SERVICES.

15. (E) BUILDING DOCUMENTATION IS BASED ON "AS-BUILT" DRAWINGS AND OBSERVATIONAL SITE INVESTIGATIONS. ACTUAL BUILT CONDITIONS MAY VARY. CONTRACTOR IS TO USE CAUTION IN DEMOLITION, AND IS TO NOTIFY ARCHITECT IMMEDIATELY IF ANY VARIATIONS OR DISCREPANCIES ARE UNCOVERED.

16. ALL WORK UNDERSTOOD TO BE (N), NEW WORK UNLESS NOTED AS (E), EXISTING.

17. ALL WORK SHALL CONFORM TO 2016 TITLE 24, CALIFORNIA CODE OF REGULATIONS (CCR).

18. FABRICATION AND INSTALLATION OF DEFERRED SUBMITTAL ITEMS SHALL NOT BE STARTED UNTIL CONTRACTOR'S DRAWINGS, SPECIFICATIONS, AND ENGINEERING CALCULATIONS FOR THE ACTUAL SYSTEMS TO BE INSTALLED HAVE BEEN ACCEPTED AND SIGNED BY THE ARCHITECT OR STRUCTURAL ENGINEER AND APPROVED BY THE DSA. LIST DEFERRED SUBMITTAL ITEMS FOR THIS PROJECT.

19. CHANGES TO THE APPROVED DRAWINGS AND SPECIFICATIONS SHALL BE MADE BY AN ADDENDUM OR A CONSTRUCTION CHANGED DOCUMENT (CCD) APPROVED BY THE DIVISION OF THE STATE ARCHITECT, AS REQUIRED BY SECTION 4-338, PART 1, TITLE 24, CCR.

20. A "DSA CERTIFIED" PROJECT INSPECTOR EMPLOYED BY THE DISTRICT (OWNER) AND APPROVED BY THE DSA SHALL PROVIDE CONTINUOUS INSPECTION OF THE WORK. THE DUTIES OF THE INSPECTOR ARE DEFINED IN SECTION 4-342, PART 1, TITLE 24, CCR.

21. A DSA ACCEPTED TESTING LABORATORYDIRECTLY EMPLOYED BY THE DISTRICT (OWNER) SHALL CONDUCT ALL THE REQUIRED TESTS AND INSPECTIONS FOR THE PROJECT.

22. THE INTENT OF THESE DRAWINGS AND SPECIFICATIONS IS THAT THE WORK OF THE ALTERATION, REHABILITATION OR RECONSTRUCTION IS TO BE IN ACCORDANCE WITH TITLE 24, CCR. SHOULD ANY EXISTING CONDITIONS SUCH AS DETERIORATION OR NON-COMPLYING CONSTRUCTION BE DISCOVERED WHICH IS NOT COVERED BY THE CONTRACT DOCUMENTS WHEREIN THE FINISHED WORK WILL NOT COMPLY WITH TITLE 24, CCR, A CONSTRUCTION CHANGE DOCUMENT (CCD), OR A SEPARATE SET OF PLANS AND SPECIFICATIONS, DETAILING AND SPECIFYING THE REQUIRED WORK SHALL BE SUBMITTED TO AND APPROVED BY DSA BEFORE PROCEEDING WITH THE WORK. (SECTION 4-317(c), PART 1, TITLE 24, CCR)

23. GRADING PLANS, DRAINAGE IMPROVEMENTS, ROAD AND ACCESS REQUIREMENTS AND ENVIRONMENTAL HEALTH CONSIDERATIONS SHALL COMPLY WITH ALL LOCAL ORDINANCES.

SHEET INDEX

GENERAL
G0.00.1 COVER SHEET
G0.01.1 GENERAL NOTES, SHEET INDEX
G1.11.1 ENERGY CHECKLIST & SUMMARY
G2.10.1 SITE ACCESSIBILITY PLAN
G2.11.1 CODE ANALYSIS
G2.12.1 OCCUPANCY & EGRESS PLAN - 1ST FLOOR
G2.13.1 OCCUPANCY & EGRESS PLAN - 2ND FLOOR
G2.21.1 EXISTING RESTROOM SUMMARY - INCREMENT 1
G2.23.2 ACCESSIBILITY COMPLIANCE PLANS - RESTROOMS 1ST FLOOR
G2.24.2 ACCESSIBILITY COMPLIANCE PLANS - RESTROOMS 2ND FLOOR
G3.21.0 MOUNTING HEIGHTS / STANDARD CODE AND ACCESSIBILITY DETAILS
G4.11.2 PHASING PLAN

CIVIL
C1.0.0 EXISTING CONDITIONS
C1.0.1 GRADING AND LAYOUT PLAN
C1.1.1 GRADING AND LAYOUT PLAN AT PARKING LOT C AND D

LANDSCAPE
L1.00.1 ENLARGED SITE LANDSCAPE PLANS - DEMOLITION & NEW

ARCHITECTURE
A0.01.0 ABBREVIATIONS / SYMBOLS
A2.01.1 OVERALL SITE PLAN
A2.03.1 ENLARGED SITE PLANS - DEMOLITION & NEW
A2.04.1 SITE DETAILS
A2.30A.1 OVERALL PLAN - 1ST FLOOR - EXISTING BUILDINGS
A2.30B.1 OVERALL PLAN - 2ND FLOOR - EXISTING BUILDINGS
A2.32.1 DEMO & NEW - 1ST FLOOR - EAST - CLASSROOM - PAINTING STUDIO
A2.33.1 DEMO & NEW - 1ST FLOOR - EAST - CLASSROOM 164 - DRAWING STUDIO
~~A2.34.1 DEMO & NEW - 1ST FLOOR - EAST - BOOKSTORE~~
CCDA-08 A2.35.1 DEMO & NEW -1ST FLOOR - WEST - ASSESSMENT LAB
A2.36.1 DEMO & NEW - 2ND FLOOR - WEST - TEMPORARY TUTORIAL & STUDY ROOM
A2.37.1 DEMO & NEW - 2ND FLOOR - EAST - A&P CLASSROOM
A2.42.1 DEMO & NEW RCP - 1ST FLOOR - EAST - CLASSROM - PAINTING STUDIO
A2.43.1 DEMO & NEW RCP - 1ST FLOOR - EAST - CLASSROOM 164 - DRAWING STUDIO
~~A2.44.1 DEMO & NEW RCP - 1ST FLOOR - EAST - BOOKSTORE~~
CCDA-08 A2.45.1 DEMO & NEW RCP - 1ST FLOOR - WEST - ASSESSMENT LAB
A2.46.1 DEMO & NEW RCP - 2ND FLOOR - WEST - TEMP TUTORIAL & STUDY
A2.47.1 DEMO & NEW RCP - 2ND FLOOR - EAST - A&P CLASSROOM
A2.57.1 ROOF PLAN - EAST - A&P CLASSROOM
A3.11.1 EXTERIOR ELEVATIONS -- DEMO & NEW
A3.12.1 EXTERIOR ELEVATIONS -- DEMO & NEW
~~A4.10.1 ENLARGED PLANS & DETAILS @ BOOKSTORE CANOPY~~
CCDA-08 A6.11.1 EXTERIOR DETAILS
A7.11.1 INTERIOR ELEVATIONS - 1ST FLOOR
A7.12.1 INTERIOR ELEVATIONS - 1ST FLOOR
~~A7.13.1 INTERIOR ELEVATIONS - BOOKSTORE~~
CCDA-08 A7.14.1 INTERIOR ELEVATIONS - SECOND FLOOR
A8.10.1 INTERIOR- PARTITION TYPE SCHEDULE
A8.11.1 PARTITION TYPE DETAILS
A8.13.1 INTERIOR DETAILS - PARTITION FRAMING & OPENINGS
A8.21.1 INTERIOR- FLOOR DETAILS
A8.31.1 INTERIOR CEILING DETAILS
A8.32.1 INTERIOR CEILING DETAILS
A8.33.1 INTERIOR CEILING & SOFFIT DETAILS
A8.40.1 DOOR SCHEDULES & TYPES
A8.50.1 INTERIOR & EXTERIOR WINDOW & STOREFRONT TYPES
A8.71.1 INTERIOR - CASEWORK PLANS & ELEVATIONS
A8.73.1 INTERIOR - CASEWORK DETAILS
A8.74.1 INTERIOR - CASEWORK DETAILS
A9.13.1 ROOM FINISH SCHEDULE
A9.21.1 SIGNAGE PLAN - 1ST FLOOR
A9.22.1 SIGNAGE PLAN - 2ND FLOOR
A9.24.1 SIGNAGE DETAILS
A9.25.1 SIGNAGE DETAILS
A9.52.1 FURNITURE PLAN - 1ST FLOOR - EAST - CLASSROOM - PAINTING STUDIO (FOR REFERENCE ONLY)
A9.53.1 FURNITURE PLAN - 1ST FLOOR - EAST - CLASSROOM - DRAWING STUDIO (FOR REFERENCE ONLY)
~~A9.54.1 FURNITURE PLAN - 1ST FLOOR - EAST - BOOKSTORE (FOR REFERENCE ONLY)~~
CCDA-08 A9.55.1 FURNITURE PLAN - 1ST FLOOR - WEST - ASSESSMENT LAB (FOR REFERENCE ONLY)
A9.56.1 FURNITURE PLAN - 2ND FLOOR - TEMPORARY TUTORIAL SPACE (FOR REFERENCE ONLY)
A9.57.1 FURNITURE PLAN - 2ND FLOOR - EAST - CLASSROOMS (FOR REFERENCE ONLY)
A9.58.1 FURNITURE PLAN - BREEZEWAY (FOR REFERENCE ONLY)

LABORATORY
Q0.02.1 LABORATORY - FURNISHINGS SCHEDULE & DETAILS
Q0.03.1 LABORATORY - FURNISHINGS SCHEDULE & DETAILS
Q2.37.1 LABORATORY - 2ND FLOOR - EAST - A&P PLANS
Q7.11.1 LABORATORY - INTERIOR ELEVATIONS & SECTIONS

FOOD SERVICE
~~FS1.1 BOOKSTORE FOOD SERVICE ITEMIZED PLAN & EQUIPMENT SCHEDULE WITH UTILITY DATA~~
~~FS1.2 BOOKSTORE FOOD SERVICE EQUIPMENT ELECTRICAL ROUGH-IN PLAN~~
~~FS1.3 BOOKSTORE FOOD SERVICE EQUIPMENT PLUMBING ROUGH-IN PLAN~~
~~FS2.1 BOOKSTORE FOOD SERVICE EQUIPMENT SMACNA DETAILS~~
CCDA-08 STRUCTURAL
S0.00.1 STRUCTURAL COVER SHEET
S0.01.1 STRUCTURAL GENERAL NOTES
S0.03.1 SYMBOLS & ABBREVIATIONS
S2.30A.1 KEY PLAN
S2.30B.1 KEY PLAN
S2.33.1 FIRST FLOOR - EAST - CLASSROOM DRAWING STUDIO
~~S2.34.1 FIRST FLOOR - EAST - BOOKSTORE~~
CCDA-08 S2.37.1 SECOND FLOOR - EAST - A&P LAB
S2.47.1 ATTIC FLOOR - EAST - MECHANICAL
S5.01.1 TYPICAL CONCRETE REINFORCEMENT DETAILS
S5.02.1 TYPICAL CONCRETE SLAB DETAILS
~~S5.03.1 CONCRETE DETAILS~~
CCDA-08 S7.01.1 STEEL DETAILS
S9.01.1 INTERIOR METAL STUD WALL DETAILS I
S9.02.1 INTERIOR METAL STUD WALL DETAILS II
S9.03.1 EXTERIOR METAL STUD WALL DETAILS

FIRE PROTECTION
FP0.01.1 SYMBOLS LIST AND GENERAL NOTES - FIRE PROTECTION
FP2.30A.1 1ST FLOOR OVERALL PLAN - FIRE PROTECTION
FP2.30B.1 2ND FLOOR OVERALL PLAN - FIRE PROTECTION
FP2.32.1 DEMO & NEW - 1ST FLOOR - EAST - CLASSROOM - PAINTING STUDIO- FIRE PROTECTION
FP2.33.1 DEMO & NEW - 1ST FLOOR - EAST - CLASSROOM - DRAWING STUDIO - FIRE PROTECTION
~~FP2.34.1 DEMO & NEW - 1ST FLOOR - EAST - BOOKSTORE - FIRE PROTECTION~~
CCDA-08 FP2.35.1 DEMO & NEW - 1ST FLOOR - WEST - ASSESSMENT LAB - FIRE PROTECTION
FP2.37.1 DEMO & NEW - 2ND FLOOR - EAST - A&P LAB - FIRE PROTECTION
FP5.01.1 DETAILS - FIRE PROTECTION

PLUMBING
P0.01.1 SYMBOLS LIST AND GENERAL NOTES - PLUMBING
P2.30A.1 1ST FLOOR OVERALL PLAN - PLUMBING
P2.30B.1 2ND FLOOR OVERALL PLAN - PLUMBING
P2.33.1 DEMO & NEW - 1ST FLOOR - EAST - CLASSROOM - DRAWING STUDIO -PLUMBING
CCDA-08 ~~P2.34.1 DEMO & NEW - 1ST FLOOR - EAST - BOOKSTORE - PLUMBING~~
P2.37.1 DEMO & NEW - 2ND FLOOR - EAST - A&P LAB PLUMBING
ADD ADD P2.38.1 ATTIC FLOOR - EAST - PLUMBING
P4.01.1 SCHEDULES - PLUMBING
P5.01.1 DETAILS - PLUMBING

MECHANICAL
M0.01.1 SYMBOLS LIST AND GENERAL NOTES - MECHANICAL
M0.02.1 SCHEDULES - MECHANICAL
M0.03.1 TITLE 24 - MECHANICAL
M0.04.1 TITLE 24 - MECHANICAL
M2.30A.1 1ST FLOOR OVERALL PLAN - MECHANICAL
M2.30B.1 2ND FLOOR OVERALL PLAN - MECHANICAL
M2.32.1 DEMO & NEW - 1ST FLOOR - EAST - CLASSROOM - PAINTING STUDIO - MECHANICAL
M2.33.1 DEMO & NEW - 1ST FLOOR - EAST - CLASSROOM - DRAWING STUDIO - MECHANICAL
CCDA-08 ~~M2.34.1 DEMO & NEW - 1ST FLOOR - EAST - BOOKSTORE - MECHANICAL~~
M2.35.1 DEMO & NEW - 1ST FLOOR - WEST - ASSESSMENT LAB - MECHANICAL
M2.37.1 DEMO & NEW - 2ND FLOOR - EAST - A&P LAB - MECHANICAL
M2.38.1 ATTIC FLOOR PLAN - EAST - MECHANICAL
M3.01.1 SECTIONS - MECHANICAL
M5.01.1 DETAILS - MECHANICAL
M5.02.1 DETAILS - MECHANICAL
M5.03.1 DETAILS - MECHANICAL
M6.01.1 CONTROLS - MECHANICAL

ELECTRICAL
E0.01.1 SYMBOLS LIST AND GENERAL NOTES - ELECTRICAL
E0.02.1 LUMINAIRE SCHEDULE - ELECTRICAL
E0.03.1 TITLE 24 - INCREMENT 1
E0.04.1 TITLE 24 - INCREMENT 1
E0.05.1 TITLE 24 - INCREMENT 1
E0.06.1 TITLE 24 - INCREMENT 1
E2.30A.1 1ST FLOOR OVERALL PLAN - ELECTRICAL
E2.30B.1 2ND FLOOR OVERALL PLAN - ELECTRICAL
E2.32.1 DEMO & NEW - 1ST FLOOR - EAST - CLASSROOM - PAINTING STUDIO - POWER
E2.33.1 DEMO & NEW - 1ST FLOOR - EAST - CLASSROOM - DRAWING STUDIO -POWER
CCDA-08 ~~E2.34.1 DEMO & NEW - 1ST FLOOR - EAST - BOOKSTORE - POWER~~
E2.35.1 DEMO & NEW -1ST FLOOR - WEST - ASSESSMENT LAB - POWER
E2.36.1 DEMO & NEW - 1ST FLOOR - WEST - READ STUDY CLASSROOM - POWER
E2.37.1 DEMO & NEW - 2ND FLOOR - EAST - A&P LAB - POWER
ADD ADD E2.38.1 DEMO & NEW - ATTIC FLOOR PLAN - WEST
E2.42.1 DEMO & NEW - 1ST FLOOR - EAST - CLASSROOM - PAINTING STUDIO -LIGHTING
E2.43.1 DEMO & NEW - 1ST FLOOR - EAST - CLASSROOM - DRAWING STUDIO - LIGHTING
CCDA-08 ~~E2.44.1 DEMO & NEW - 1ST FLOOR - EAST - BOOKSTORE - LIGHTING~~
E2.45.1 DEMO & NEW -1ST FLOOR - WEST - ASSESSMENT LAB - LIGHTING
E2.46.1 DEMO & NEW - 2ND FLOOR - WEST - TEMP TUTORIAL & STUDY - LIGHTING
E2.47A.1 DEMO - 2ND FLOOR - EAST - A&P LAB - LIGHTING
E2.47B.1 NEW - 2ND FLOOR - EAST - A&P LAB - LIGHTING
E2.51.1 ATTIC FLOOR PLAN - POWER
E4.01.1 PARTIAL SINGLE LINE DIAGRAM AND PANEL SCHEDULES - ELECTRICAL
E5.01.1 DETAILS - ELECTRICAL
E5.02.1 DETAILS - LIGHTING CONTROLS
E5.03.1 DETAILS - LIGHTING CONTROLS
E5.04.1 DETAILS - LIGHTING CONTROLS
E5.05.1 DETAILS - LIGHTING CONTROLS
E5.06.1 DETAILS - LIGHTING CONTROLS

TECHNOLOGY
T0.00.0 TECHNOLOGY NOTES AND ABBREVIATIONS
T0.01.0 TECHNOLOGY SYMBOLS AND LEGENDS
T1.01.1 LEVEL 1 PLAN - WEST BUILDING
T1.02.1 LEVEL 1 PLAN - EAST BUILDING
T1.03.1 LEVEL 2 PLAN - WEST BUILDING
T1.04.1 LEVEL 2 PLAN - EAST BUILDING
T4.01.0 ELEVATIONS
T7.01.0 DETAILS - SECURITY
T7.02.0 DETAILS - TELECOM
T7.03.0 DETAILS - AUDIOVISUAL
T7.04.0 AV JUNCTION BOX SCHEDULE
T4.02.1 ENLARGED CADAVER LAB AND CLASSROOM PLANS

FIRE ALARM
FA0.01.1 SYMBOLS LIST AND GENERAL NOTES - FIRE ALARM
FA2.30A.1 1ST FLOOR OVERALL PLAN - FIRE ALARM
FA2.30B.1 2ND FLOOR OVERALL PLAN - FIRE ALARM
FA2.32.1 DEMO & NEW - 1ST FLOOR - EAST - CLASSROOM - PAINTING STUDIO -FIRE ALARM
FA2.33.1 DEMO & NEW - 1ST FLOOR - EAST - CLASSROOM - DRAWING STUDIO - FIRE ALARM
CCDA-08 ~~FA2.34.1 DEMO & NEW - 1ST FLOOR - EAST - BOOKSTORE - FIRE ALARM~~
FA2.35.1 DEMO & NEW -1ST FLOOR - WEST - ASSESSMENT LAB - FIRE ALARM
FA2.37.1 DEMO & NEW - 2ND FLOOR - EAST - A&P LAB - FIRE ALARM
FA2.38.1 EXISTING - PENTHOUSE FLOOR PLAN - EAST - FIRE ALARM
FA5.01.1 DETAILS - FIRE ALARM

TOTAL SHEETS: : 177

NOLL & TAM ARCHITECTS
729 Heinz Avenue
Berkeley, CA 94710
tel 510.542.2200
fax 510.542.2201

ARCHITECTS SEAL

LICENSED ARCHITECT
CHRISTOPHER NOLL
No. C15916
REN. 12-31-21
STATE OF CALIFORNIA

APPROVALS
FILE NUMBER: 07-C1
DIVISION OF THE STATE ARCHITECT
APP# 01-117630
ACS_____FLS_____SSS_____
Date:

PROJECT TITLE
CONTRA COSTA CCD
D-4002
DVC SAN RAMON CAMPUS EXPANSION & RENOVATION
1690 Watermill Rd.
San Ramon, CA 94582

ISSUE TITLE
INCREMENT 1 - RENOVATION

ISSUE DATE 4/26/19
NOLL & TAM JOB NUMBER 21630

REVISIONS

	DATE	DESCRIPTION
1	1/30/19	BID ADDENDUM 3
	6/11/19	INC 1 CD3

SHEET TITLE
GENERAL NOTES, SHEET INDEX

SHEET NUMBER
G0.01.1

10/11/2021 2:38:30 PM C:\Users\phan.dung\Documents\Revit Locals\DVCSR Expansion_Central 2020_phan.dung@nollandtam.com.rvt

DSA 403-A

2016 ENERGY CODE – CERTIFICATES OF COMPLIANCE CHECKLIST

PRESCRIPTIVE METHOD
(for Performance Method, use Form DSA 403-B)

Energy Forms and Worksheets to be included in Title 24 Report and Plans
Check the appropriate boxes for all required forms included in this DSA submittal
Key: **R** = Report Required **P** = Copy of Form Required on Plans

DESIGN REVIEW	R	☐				NRCC-CXR-01-E Cx Design Review Kickoff
	R	☐				NRCC-CXR-02-E Cx Construction Documents – General
	R	☐				NRCC-CXR-03-E Cx Construction Documents – Simple HVAC
	R	☐				NRCC-CXR-04-E Cx Construction Documents – Complex HVAC
	R	☐				NRCC-CXR-05-E Cx Design Review Signature Page
ENVELOPE	R	☒	P	☐		NRCC-ENV-01-E Envelope Component Approach
	R	☒				NRCC-ENV-02-E Fenestration Component Approach
	R	☐				NRCC-ENV-03-E Solar Reflective Index (SRI) Calculation Worksheet
	R	☐				NRCC-ENV-04-E Envelope - Daylit Zone Worksheet
	R	☐				NRCC-ENV-05-E Fenestration Certificate Label
	R	☐				NRCC-ENV-06-E Area Weighted Average Calculations Worksheet
MECHANICAL	R	☒	P	☐		NRCC-MCH-01-E Mechanical Systems
	R	☒				NRCC-MCH-02-E HVAC System Requirements
	R	☒				NRCC-MCH-03-E Mechanical Ventilation and Reheat
	R	☐				NRCC-MCH-06-E Maximum Cycles of Concentration Worksheet
	R	☒	P	☐		NRCC-MCH-07-E Fan Power Consumption
	R	☐	P	☐		NRCC-MCH-04-E Required Acceptance Tests
	R	☐	P	☐		NRCC-MCH-05-E Requirements for Packaged Single Zone Units
INDOOR LIGHTING	R	☒	P	☒		NRCC-LTI-01-E Indoor Lighting
	R	☒	P	☒		NRCC-LTI-02-E Indoor Lighting Controls
	R	☒				NRCC-LTI-03-E Indoor Lighting Power Allowance
	R	☐				NRCC-LTI-04-E Tailored Method
	R	☐				NRCC-LTI-05-E Line-Voltage Track Lighting Worksheet
	R	☐				NRCC-LTI-06-E Indoor Lighting Existing Conditions
OUTDOOR LIGHTING	R	☒	P	☒		NRCC-LTO-01-E Outdoor Lighting
	R	☒	P	☒		NRCC-LTO-02-E Outdoor Lighting Control
	R	☒				NRCC-LTO-03-E Outdoor Lighting Power Allowance
	R	☐				NRCC-LTO-04-E Outdoor Lighting Existing Conditions
SOLAR	R	☐				NRCC-SRA-01-E Solar Ready Areas
	R	☐				NRCC-SRA-02-E Minimum Solar Zone Area Worksheet
	R	☐				NRCC-STH-01-E OG 100 Solar Water Heating Worksheet

DSA 403-A
2016 ENERGY CODE – CERTIFICATES OF COMPLIANCE CHECKLIST

Energy Forms and Worksheets to be included in Title 24 Report and Plans
Check the appropriate boxes for all required forms included in this DSA submittal
Key: **R** = Report Required **P** = Copy of Form Required on Plans

SIGN LIGHTING	R	☐	P	☐		NRCC-LTS-01-E Sign Lighting
COVERED PROCESSES	R	☐	P	☐		NRCC-PRC-01-E Process Compliance Forms and Worksheets
	R	☐				NRCC-PRC-02-E Garage Exhaust
	R	☐				NRCC-PRC-03-E Commercial Kitchen Requirements
	R	☐				NRCC-PRC-04-E Computer Room Requirements
	R	☐				NRCC-PRC-05-E Commercial Refrigeration
	R	☐				NRCC-PRC-06-E Refrigerated Warehouse
	R	☐				NRCC-PRC-07-E Refrigerated Warehouse ≥ 3,000 sq. ft.
	R	☐				NRCC-PRC-08-E Refrigerated Warehouses ≥ 3,000 sq. ft. served by same refrigeration system
	R	☐				NRCC-PRC-09-E Laboratory Exhaust
	R	☐				NRCC-PRC-10-E Compressed Air System
	R	☐				NRCC-PRC-11-E Process Boiler Requirements
	R	☐				NRCC=PRC-12-E Elevator Lighting and Ventilation Controls
	R	☐				NRCC-PRC-13-E Escalators and Moving Walkways Speed Controls
ELECTRICAL	R	☐	P	☐		NRCC-ELC-01-E Electrical Power Distribution
PLUMBING	R	☐	P	☐		NRCC-PLB-01-E Water Heating Systems

As Professional in General Responsible Charge, I declare that I have reviewed this project plans submittal and affirm that the project plans are in compliance with the requirements of the current Energy Code (Title 24, Part 6), and the documents checked on pages 1 and 2 of this form are included in the project submittal. I further acknowledge that upon installation of equipment and material identified on compliance forms, I will ensure that the appropriate tests are conducted and the associated acceptance forms (see http://www.energy.ca.gov/title24/2016standards/nonresidential_manual.html) are completed, signed, and submitted and that the project construction complies with Energy Efficiency Regulations.

Jess Agosta		06/25/18
Print Name	**Signature**	**Date**

ENERGY COMPLIANCE SUMMARY

CLIMATE ZONE: 12

FENESTRATION:
EAST BUILDING:
BOOKSTORE:
ALTERED OPENING = 66 SF
EXISTING OPENING = - 46.75 SF
19.25 SF ADDED
CLASSROOM 164:
AREA OF (N) GLAZING @ TRANSOM = 17.08 SF ADDED

CORRIDOR 228:
ALTERED OPENING = 106.75 SF
EXISTING OPENING = - 144 SF
- 37.25 SF (LESS THAN EXISTING)

TOTAL EAST BUILDING FENESTRATION ADDED = 19.25 + 17.08 -37.25 = - 0.92 SF ≤ 50 SF (CEC 141.0(b)2Aii EXCEPTION 2 FOR SHGC AND VT APPLIES)

WEST BUILDING:
ASSESSMENT LAB:
AREA OF (N) GLAZING @ TRANSOM = 17.08 SF ADDED ≤ 50 SF (CEC 141.0(b)2Aii EXCEPTION 2 FOR SHGC AND VT APPLIES)

FENESTRATION MAX U-VALUE (CEC TABLE 140.3-B):
STOREFRONT ≤ 0.41
GLAZED DOORS ≤ 0.45
FENESTRATION MAX SHGC = N/A PER CEC 141.0(b)2Ai EXCEPTION 2
FENESTRATION MAX VT = N/A PER CEC 141.0(b)2Ai EXCEPTION 2

WALL INSULATION : CEC 141.0(b).1B

METAL FRAMED: MINIMUM R-13 REQUIRED (R-19 PROVIDED) BETWEEN FRAMING MEMBERS, OR WEIGHTED AVERAGE U-FACTOR OF ASSEMBLY ≤ 0.113

EXTERIOR DOORS (LESS THAN 50% GLAZED): CEC TABLE 140.3-B

SWINGING, MAX U-FACTOR ≤ 0.70
EXTERIOR DOOR AIR INFILRATION: CEC 110.6, ≤ 0.3 cfm/ft² OF DOOR AREA (SINGLE DOORS)

NOLL & TAM ARCHITECTS
729 Heinz Avenue
Berkeley, CA 94710
tel 510.542.2200
fax 510.542.2201

ARCHITECTS SEAL

LICENSED ARCHITECT
CHRISTOPHER NOLL
No. C15916
REN. 12-31-21
STATE OF CALIFORNIA

APPROVALS
FILE NUMBER: 07-C1
DIVISION OF THE STATE ARCHITECT
APP# 01-117630
ACS_____ FLS_____ SSS_____
Date:

PROJECT TITLE
CONTRA COSTA CCD
D-4002
DVC SAN RAMON CAMPUS EXPANSION & RENOVATION
1690 Watermill Rd.
San Ramon, CA 94582

ISSUE TITLE
INCREMENT 1 - RENOVATION

ISSUE DATE **4/26/19**
NOLL & TAM JOB NUMBER **21630**
REVISIONS
△ | DATE | DESCRIPTION

SHEET TITLE
ENERGY CHECKLIST & SUMMARY

SHEET NUMBER
G1.11.1

10/11/2021 2:38:32 PM C:\Users\phan.dung\Documents\Revit Locals\DVCSR Expansion_Central 2020_phan.dung@nollandtam.com.rvt

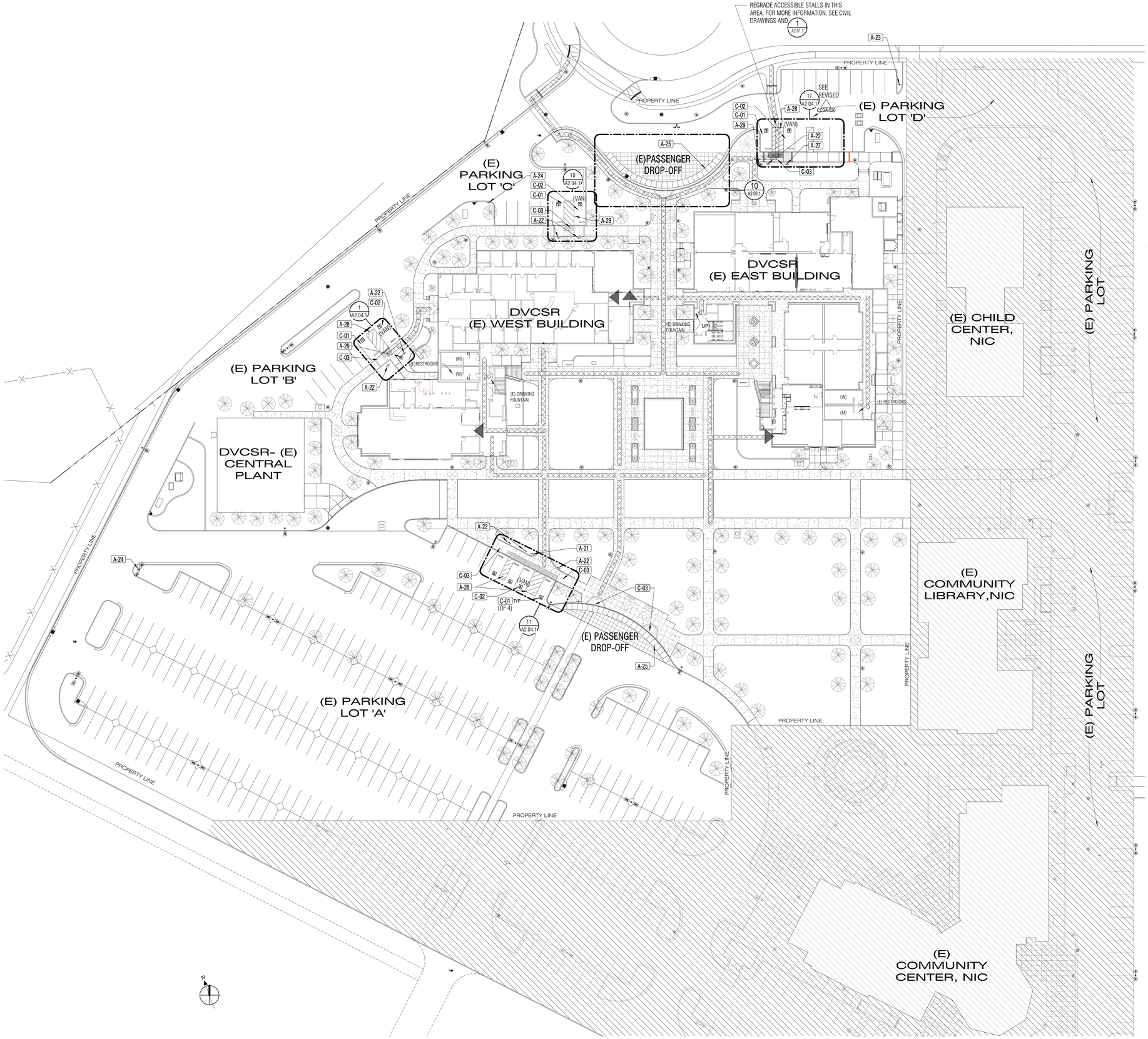

1 G2.10.1 **OVERALL SITE PLAN_ACCESSIBILITY**
1" = 30'-0"

SHEET NOTES

1. EXISTING SITE IMPROVEMENTS ARE PART DSA APPLICATION #01-106062. EXISTING BUILDINGS ARE UNDER DSA APPLICATION # 01-105719
2. SEE 5 & 9/A2.03.1 FOR MINIMUM HEIGHT CLEARANCES BELOW PARKING SIGNS.
3. SEE 1 & 2/A9.25.1 FOR PARKING SIGNAGE GRAPHIC & SIZE INFORMATION

ACCESSIBILE PATH OF TRAVEL

ACCESSIBLE PATH OF TRAVEL AS INDICATED ON PLAN IS A CONTINUOUS, BARRIER FREE ACCESS ROUTE WITHOUT ANY ABRUPT LEVEL CHANGES EXCEEDING 1/2" BEVELED AT 1:2 MAX SLOPE, OR VERTICAL CHANGES NOT EXCEEDING 1/4" MAX, AND AT LEAST 48" WIDE. SURFACE IS SLIP RESISTANT, STABLE, FIRM, AND SMOOTH. CROSS SLOPE DOES NOT EXCEED 2% AND SLOPE IN THE DIRECTION OF TRAVEL IS LESS THAN 5% UNLESS OTHERWISE INDICATED. CONTRACTOR SHALL VERIFY THAT ALL BARRIERS IN THE PATH OF TRAVEL HAVE BEEN REMOVED OR WILL BE REMOVED UNDER THIS PROJECT, AND PATH OF TRAVEL COMPLIES WITH CBC.

ACCESSIBILITY STATEMENT

ACCESSIBILITY STATEMENT BY DESIGN PROFESSIONAL IN GENERAL RESPONSIBLE CHARGE

THE PATH-OF-TRAVEL (POT) INDICATED IN THESE CONSTRUCTION DOCUMENTS IS COMPLIANT WITH CURRENT APPLICABLE CALIFORNIA BUILDING CODE ACCESSIBILITY PROVISIONS FOR PATH OF TRAVEL REQUIREMENTS FOR ALTERATIONS, ADDITIONS AND STRUCTURAL REPAIRS.

AS PART OF THE DESIGN OF THIS PROJECT, THE POT WAS EXAMINED, AND ANY ELEMENTS, COMPONENTS OR PORTIONS OF THE POT THAT WERE DETERMINED TO BE NONCOMPLIANT (1) HAVE BEEN IDENTIFIED; AND (2) THE CORRECTIVE WORK NECESSARY TO BRING THEM INTO COMPLIANCE HAS BEEN INCLUDED WITHIN THE SCOPE OF THIS PROJECT'S WORK THROUGH DRAWINGS, DETAILS AND SPECIFICATION INCORPORATED INTO THESE CONSTRUCTION DOCUMENTS.

ANY NONCOMPLIANT ELEMENT, COMPONENT, OR PORTION OF THE POT THAT WILL NOT BE CORRECTED BY THIS PROJECT, BASED ON A VALUATION THRESHOLD LIMITATION OR A FINDING OF UNREASONABLE HARDSHIP, IS SO INDICATED IN THESE CONSTRUCTION DOCUMENTS.

DURING CONSTRUCTION, IF ANY POT ITEM WITHIN THE SCOPE OF THE PROJECT REPRESENTED AS CODE COMPLIANT IS FOUND TO BE NONCONFORMING BEYOND REASONABLE CONSTRUCTION TOLERANCES, IT SHALL BE BROUGHT INTO COMPLIANCE WITH THE CBC AS A PART OF THIS PROJECT BY MEANS OF A CONSTRUCTION CHANGE DOCUMENT.

PARKING SUMMARY

EXISTING PARKING:

(E) PARKING SPACE TOTAL = 281
TOTAL ACCESSIBLE STALLS PROVIDED = 10
(E) ACCESSIBLE STALLS = 6
(E) VAN ACCESSIBLE STALLS = 4

ACCESSIBLE PARKING REQUIRED PER 2016 CBC:

FOR 281 STALLS: (7) TOTAL ACCESSIBLE STALLS REQUIRED PER CBC TABLE 11B-208.2 PER CBC 11B-208.4, (2) OF THE (7) REQUIRED STALLS SHALL BE VAN ACCESSIBLE

NO ADDITIONAL ACCESSIBLE STALLS REQUIRED.

Key Value	Keynote Text
A-21	NEW ACCESSIBLE PARKING IDENTIFICATION & MINIMUM FINE SIGNS MOUNTED ON SHARED POLE.
A-22	ADD (N) MINIMUM $250 FINE SIGN TO (E) POLE WITH (E) ACCESSIBLE PARKING IDENTIFICATION SIGN
A-23	(E) POLE-MOUNTED UNAUTHORIZED VEHICLE WARNING SIGN
A-24	NEW POLE-MOUNTED UNAUTHORIZED VEHICLE WARNING SIGN
A-25	NEW PAINTED STRIPING TO IDENTIFY PASSENGER LOADING / DROP-OFF ACCESS AISLE. SEE 10/A2.03.1
A-27	ADD (N) MINIMUM FINE SIGN TO (E) POLE WITH (E) ACCESSIBLE PARKING IDENTIFICATION SIGN. LOWER (E) FACULTY PARKING RESTRICTION BENEATH FEE SIGN. MAINTAIN MIN. HT CLEARANCE.
A-28	RE-PAINT PERIMETER OF ACCESS AISLE WITH BLUE TRAFFIC STRIPING PER CBC 11B-502.3.3
A-29	ADD (N) UNAUTHORIZED VEHICLES WARNING SIGN TO (E) LIGHT POLE
C-01	EXISTING ACCESSIBLE PARKING STALL(S) WITH ACCESS AISLE (DSA#01-105719)
C-02	EXISTING VAN ACCESSIBLE PARKING STALL WITH ACCESS AISLE (DSA#01-105719)
C-03	EXISTING CURB CUT RAMP (DSA#01-105719)

ACCESSIBILITY LEGEND

- SITE AREA NOT IN SCOPE
- ACCESSIBLE ROUTE OF TRAVEL (POT)
- (E) FIRE ACCESS LANE - TURF PAVERS REFER TO CIVIL FOR EXTENT OF WORK AND REPLACEMENT
- (E) BUILDING MAIN ENTRANCE
- (E)CONCRETE WALK
- (E) FIRE ACCESS LANE - SITE AREA NOT IN SCOPE

NOLL & TAM ARCHITECTS
729 Heinz Avenue
Berkeley, CA 94710
tel 510.542.2200
fax 510.542.2201

ARCHITECTS SEAL

LICENSED ARCHITECT
CHRISTOPHER NOLL
No. C15916
REN. 12-31-21
STATE OF CALIFORNIA

APPROVALS
FILE NUMBER: 07-C1
DIVISION OF THE STATE ARCHITECT
APP# 01-117630
ACS_____FLS_____SSS_____
Date:

PROJECT TITLE
CONTRA COSTA CCD
D-4002
DVC SAN RAMON CAMPUS EXPANSION & RENOVATION
1690 Watermill Rd.
San Ramon, CA 94582

ISSUE TITLE
INCREMENT 1 - RENOVATION

ISSUE DATE 4/26/19
NOLL & TAM JOB NUMBER 21630

REVISIONS

	DATE	DESCRIPTION
1	9/25/19	INC 1

SHEET TITLE
SITE ACCESSIBILITY PLAN

SHEET NUMBER
G2.10.1

10/11/2021 2:38:33 PM C:\Users\phan.dung\Documents\Revit Locals\DVCSR Expansion_Central 2020_phan.dung@nollandtam.com.rvt

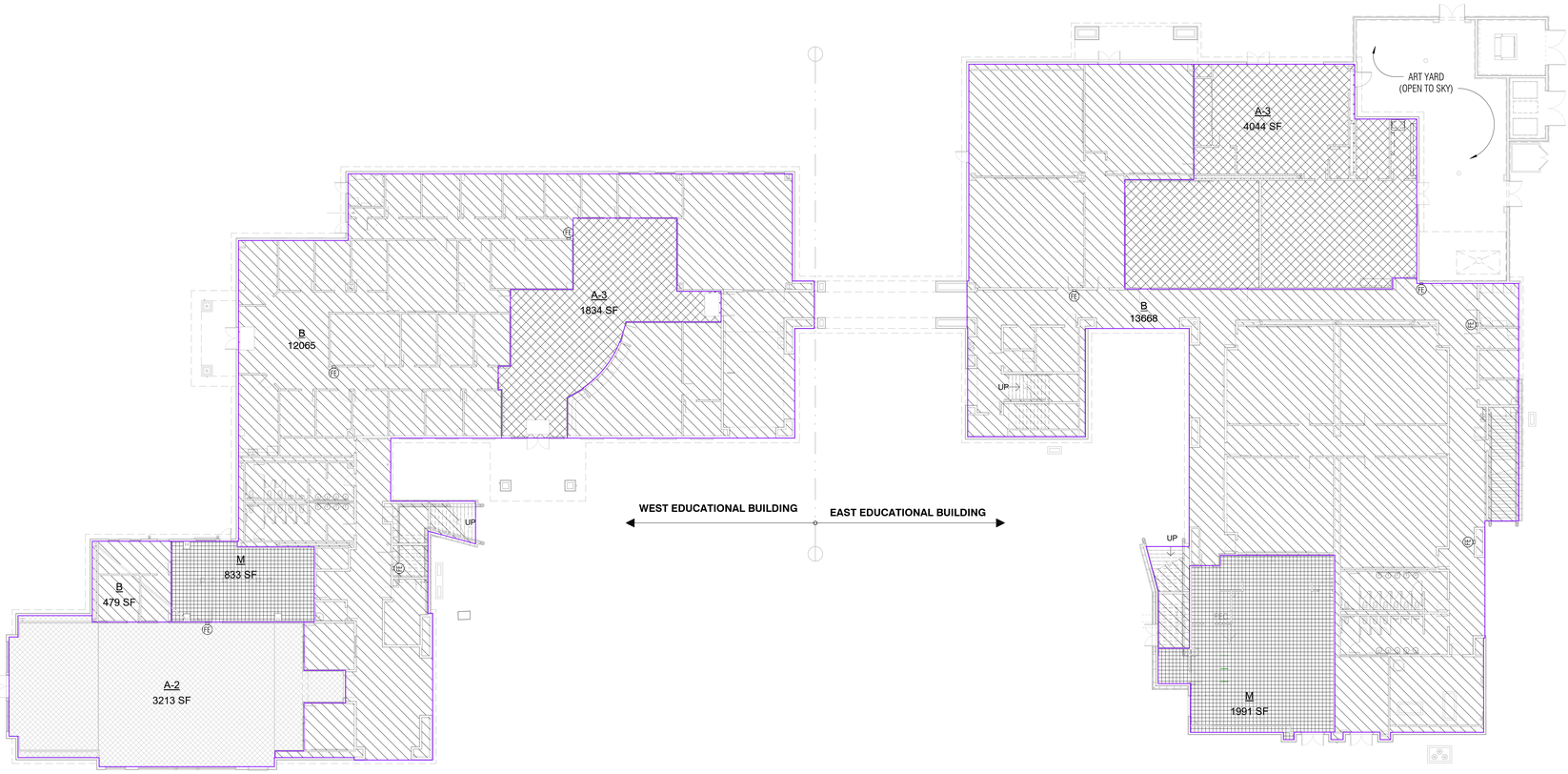

1 G2.11.1 **LEVEL 01 - BUILDING AREA DIAGRAM**
1/16" = 1'-0"

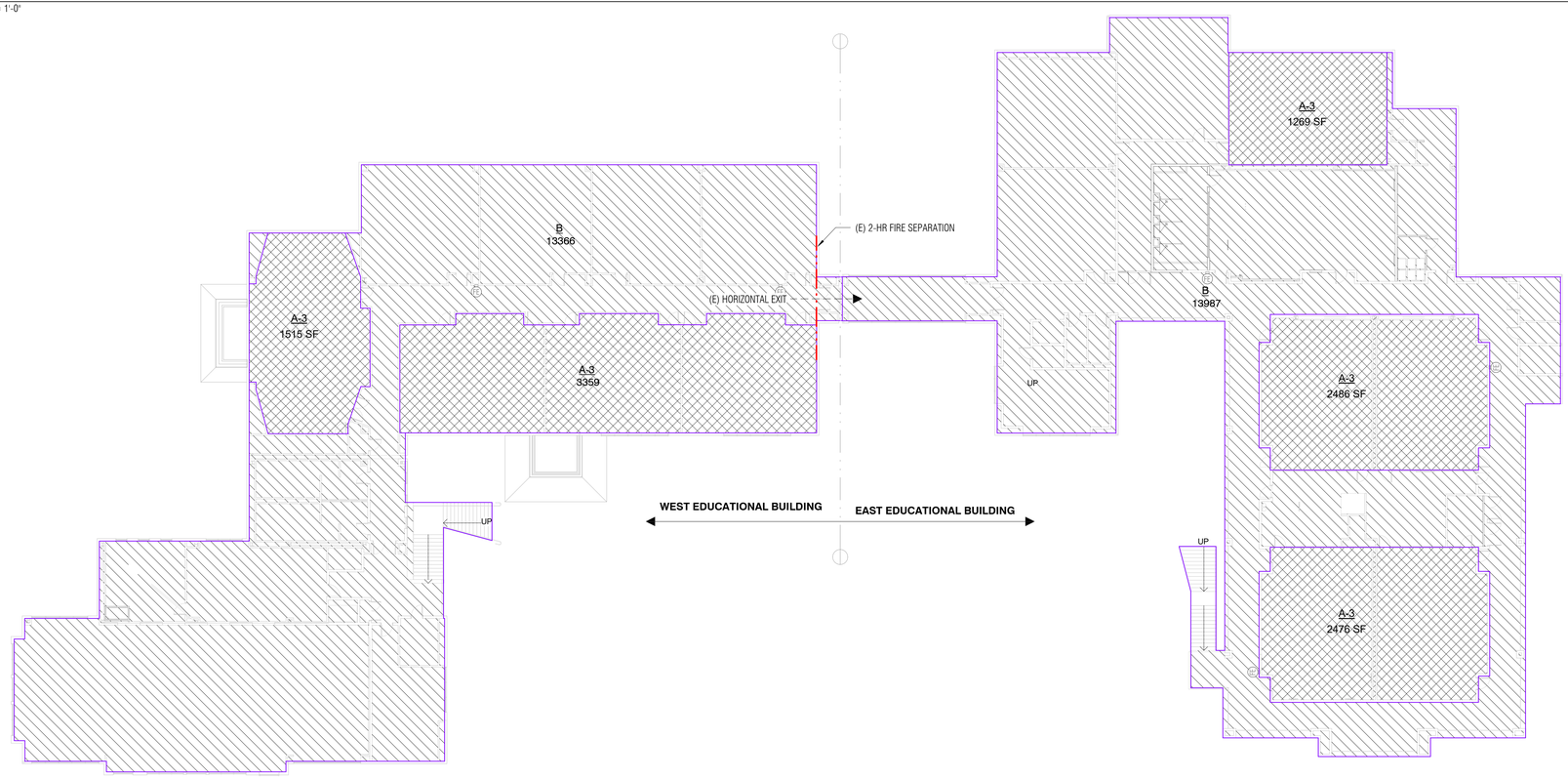

2 G2.11.1 **LEVEL 02 - BUILDING AREA DIAGRAM**
1/16" = 1'-0"

BUILDING CODE SUMMARY

SUMMARY OF EXISTING CONSTRUCTION:

1. EXISTING CAMPUS BUILDINGS WERE PERMITTED UNDER THE 2001 CBC
   - A. CONSTRUCTION TYPE OF EAST & WEST EDUCATIONAL BUILDINGS:
     - a. II 1-HR, FULLY SPRINKLERED
   - B. AUTOMATIC SPRINKLER SYSTEM WAS USED FOR SUBSTITUTION OF 1-HOUR CONSTRUCTION (2001 CBC 508)
   - C. OCCUPANCIES:
     - a. B: HIGHER ED-COMMUNITY COLLEGE
     - b. A-3: CLASSROOMS WITH OCCUPANT LOAD >50, LIBRARY
   - D. EAST AND WEST BUILDING WINGS WERE CONSIDERED SEPARATE BUILDINGS WITH THE 2-HR AREA SEPARATION WALL. (SEE PLAN FOR LOCATION; 2001 CBC 504.6)
   - E. BUILDING AREAS WERE CALCULATED AS SEPARATED OCCUPANCIES. (2001 CBC 504.3)
     - a. NO FIRE RATED SEPARATION WAS REQUIRED BETWEEN B AND M OCCUPANCIES (2001 CBC TABLE 3-B)
   - F. ALLOWABLE HEIGHT = 65' (54'-5" ACTUAL)
   - G. ALLOWABLE STORIES = 2 STORIES FOR A-3, 4 FOR B (2 ACTUAL)
   - H. NO INCREASE IN BUILDING AREA OR HEIGHT WAS TAKEN FOR SPRINKLERS.

ACTUAL AREAS OF EXISTING BUILDINGS:

EAST EDUCATIONAL BUILDING	B	A-3	M	
FIRST FLOOR	17,031	2,616	0	= 19,647
SECOND FLOOR	14,324	5,893	0	= 20,217
				39,864 TOTAL BLDG. AREA

WEST EDUCATIONAL BUILDING	B	A-3	M	
FIRST FLOOR	12,830	4,762	832	= 18,424
SECOND FLOOR	13,366	4,874	0	= 18,240
				36,664 TOTAL BLDG. AREA

TOTAL SQ FOOT OF TWO BUILDINGS = 76,578 SF

SUMMARY OF PROPOSED RENOVATION:

1. NO CHANGE TO BUILDING AREA, HEIGHT, OR STORIES.
2. CONSTRUCTION TYPE: II-B
   - A. APPLIES TO BOTH EAST & WEST EDUCATIONAL BUILDINGS
   - B. 1-HR SUBSTITUTION USED IN 2001 CODE IS NOT PERMITTED IN 2016 CODE SO NO LONGER EQUIVALENT TO ORIGINAL TYPE II-1 HR WITH SPRINKLER SUBSTITUTION.
3. EAST & WEST BUILDINGS STILL CONSIDERED SEPARATE BUILDINGS FOR DETERMINING ALLOWABLE AREA.
   - A. TYPE II CONSTRUCTION B & A OCCUPANCIES CAN HAVE 2-HR FIRE WALL SEPARATION PER 2016 CBC TABLE 706.A, FOOTNOTE 'a'. (2-HR FIRE SEPARATION PROVIDED IN ORIGINAL CONSTRUCTION)
   - B. INCREASE IN AREA TAKEN FOR FULLY AUTOMATIC SPRINKLER SYSTEM
4. PROPOSED OCCUPANCY AREAS:
   - A. L OCCUPANCY IS ACCESSORY TO B (<10% OF B AREA)

EAST EDUCATIONAL BUILDING:	B	A-3	M	
FIRST FLOOR	13,618	4,047	1,982	= 19,647
SECOND FLOOR	13,987	6,230	0	= 20,217
				39,814 TOTAL BLDG. AREA

WEST EDUCATIONAL BUILDING	B	A-3	M	
FIRST FLOOR	12,544	5,048	832	= 18,424
SECOND FLOOR	13,366	4,874	0	= 18,240
				36,664 TOTAL BLDG. AREA

ALLOWABLE AREA, NON-SEPARATED OCCUPANCIES:
PER TABLE 506.2, ALLOWABLE AREA FACTORS (SM):
B = 69,000
A-3 = 28,500
M = 37,500
WORST CASE CONDITION, A-3 OCCUPANCY APPLIED TO BOTH EAST AND WEST BUILDINGS

CBC TABLE 506.2:
A-3 (SM) = 28,500 SF PER FLOOR x 2 (FLOORS) = 57,000 TOTAL BUILDING AREA

EACH FLOOR IN EACH BUILDINGS < 28,500 SF: OK
EACH BUILDINGS TOTAL AREA < 57,000: OK

FOR CURRENT 2016 CBC, THE BUILDINGS ARE ANALYZED AS BEING EQUIVALENT TO TYPE II-B CONSTRUCTION. PER 2004 DWGS, BUILDING WERE CONSTRUCTED AS TWO SEPARATE BUILDINGS WITH A 2-HOUR FIRE SEPARATION. THEREFORE, SEPARATED AS EAST AND WEST BUILDINGS.

CODE REVIEW UTILIZES AN ALLOWABLE AREA, NON-SEPARATED OCCUPANCY APPROACH. IN THAT CASE THE A-3 OCCUPANCY IS THE MOST RESTRICTIVE OF THE THREE OCCUPANCIES LISTED – OCCUPANCY B : 69,000 SF; OCCUPANCY A-3: 28,500 SF; OCCUPANCY M:37,500 SF ALLOWABLE AREA PER FLOOR. FOR A 2-STORY BUILDING, THE TABULAR AREA ALLOWED FOR AN A-3 OCCUPANCY PER CBC TABLE 506.2 IS 28,500 MULTIPLIED BY 2, OR 57,000 SQUARE FEET TOTAL FOR EACH BUILDING. BOTH THE EAST AND WEST BUILDINGS FALL UNDER THIS THRESHOLD THEREFORE, THE CODE ALLOWS THE NON-SEPARATED OCCUPANCY APPROACH AND EXISTING WALLS DO NOT REQUIRE BEING UPGRADED TO PROVIDE A 1-HOUR SEPARATION

"A&P LAB" IS A PRACTICAL APPLICATION ANATOMY & PHYSIOLOGY CLASSROOM FOR NURSING STUDENTS AND CLASSIFIED AS A 'B' OCCUPANCY. THE CADAVER LAB IS PART OF THE GROSS ANATOMY & PHYSIOLOGY CLASSROOM AND THE INTERIOR PARTITION BETWEEN THE TWO IS REQUIRED FOR CLIMATE CONTROL AND SECURITY OF THE CADAVERS. THESE ROOMS DO NOT QUALIFY TO RECEIVE 1-HR RATED WALL REQUIREMENT.

- PER DSA IR A-26.CC OCCUPANCY CLASSIFICATIONS AND OCCUPANT LOAD FACTORS FOR COMMUNITY COLLEGES: 1.3 SCIENCE CLASSROOMS
- "WHERE HAZARDOUS MATERIALS IN EXEMPT QUANTITIES ARE USED OR STORED, SHALL BE CLASSIFIED AS A GROUP 'B' OCCUPANCY WITH AN OCCUPANT LOAD FACTOR OF 50 (NET)". CADAVER SCIENCE CLASSROOM AND ANATOMY & PHYSIOLOGY SCIENCE CLASSROOM IS NOT A 'LAB' WHICH INDICATES A HIGHER LEVEL OF HAZARDOUS USE/ OCCUPANCY USE RATHER IT IS MEANT.
- CALCULATED OCCUPANT LOAD IS 20 OCCUPANTS FOR TYPE 'B' USE (ALLOCATED BENCH SPACE FOR 32 STUDENTS + 1 INSTRUCTOR = 33 TOTAL PERSONS)

NO CHANGE TO EXISTING BUILDING CHEMICAL USE OR QUANTITY. PER OWNER'S CHEMICAL STORAGE/USAGE LETTER, THE QUANTITIES ARE BELOW REQUIREMENTS FOR 'B' OCCUPANCY.

OCCUPANCY TYPE LEGEND

- ASSEMBLY, UNCONCENTRATED (15 OCC/NET SF)
- BUSINESS, INCLUDING CLASSROOMS (100 OCC/GROSS SF OR 20 OCC/NET SF @ CLASSROOMS)
- MERCANTILE (60 OCC/GROSS SF)
- STORAGE, INCLUDING MERCANTILE STORAGE/STOCKING (300 OCC/GROSS SF)

NOLL & TAM ARCHITECTS
729 Heinz Avenue
Berkeley, CA 94710
tel 510.542.2200
fax 510.542.2201

ARCHITECTS SEAL

LICENSED ARCHITECT
CHRISTOPHER NOLL
No. C15916
REN. 12-31-21
STATE OF CALIFORNIA

APPROVALS
FILE NUMBER: 07-C1
DIVISION OF THE STATE ARCHITECT
APP# 01-117630
ACS_____FLS_____SSS_____
Date:

PROJECT TITLE
CONTRA COSTA CCD
D-4002
DVC SAN RAMON CAMPUS EXPANSION & RENOVATION
1690 Watermill Rd.
San Ramon, CA 94582

ISSUE TITLE
INCREMENT 1 - RENOVATION

ISSUE DATE 4/26/19
NOLL & TAM JOB NUMBER 21630
REVISIONS
| DATE | DESCRIPTION

SHEET TITLE
CODE ANALYSIS

SHEET NUMBER
G2.11.1

10/11/2021 2:38:39 PM C:\Users\phan.dung\Documents\Revit Locals\DVCSR Expansion_Central_2020_phan.dung@nollandtam.com.rvt

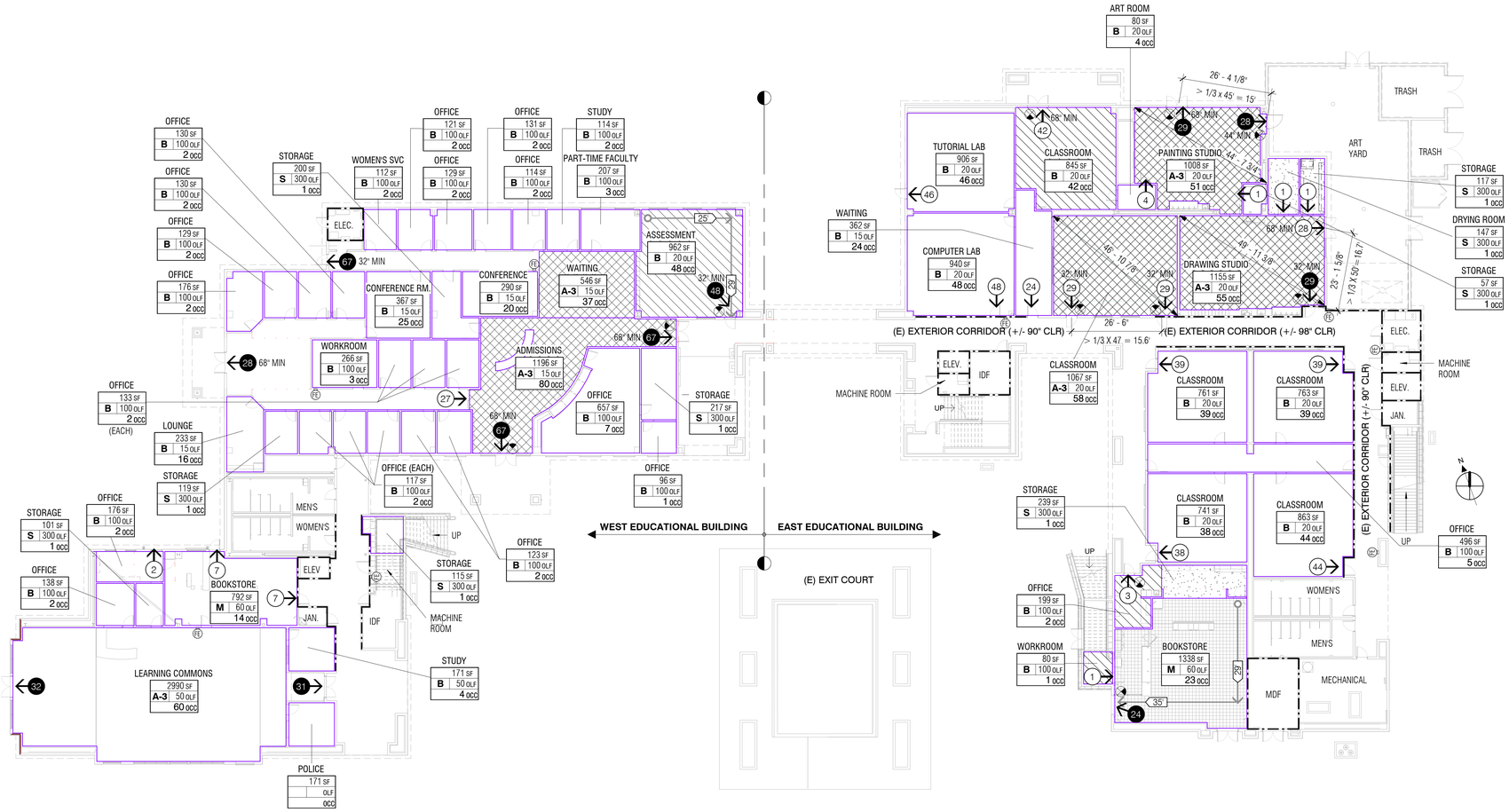

1 G2.12.1 **FLOOR 1 OCCUPANCY / EXITING**
1/16" = 1'-0"

SHEET NOTES:

1. HATCHED AREAS INDICATE AREAS OF RENOVATION WORK.
2. EXIT SIGN LOCATIONS ARE SHOWN IN AREA OF WORK ONLY AND ARE DIAGRAMMATIC. SEE RCP's AND ELECTRICAL LIGHTING PLANS FOR INFORMATION REGARDING EXISTING OR NEW, LOCATION, MOUNTING, AND DIRECTION.

SYMBOL LEGEND

- ASSEMBLY-UNCONCENTRATED / 4000 SF / A-3 / 15 OLF / 267 OCC — OCCUPANCY TYPE DESCRIPTION; TOTAL ROOM AREA IN SQUARE FEET; OCCUPANT LOAD FACTOR PER CBC TABLE 1004.1.2; TOTAL ROOM OCCUPANCY; OCCUPANCY TYPE PER CBC TABLE 1004.1.2
- 19 — COMMON PATH OF EGRESS TRAVEL (CPOT) CBC SECTION 1014.3 (MAY ALSO INCLUDE EXIT ACCESS TRAVEL DISTANCE)
- 19 — EXIT ACCESS TRAVEL DISTANCE PER CBC SECTION 1017.2
- EXISTING 1- HOUR RATED ASSEMBLY
- EXISTING 2 - HOUR RATED AREA SEPARATION WALL
- NEW 1 - HOUR RATED ASSEMBLY
- 6 — OCCUPANT LOAD
- 24 — ACCUMULATED OCCUPANT LOAD
- (E) FIRE EXTINGUISHER
- EXIT SIGN LOCATION (SEE SHEET NOTE #2)

OCCUPANCY TYPE LEGEND

- ASSEMBLY, UNCONCENTRATED (15 OCC/NET SF)
- BUSINESS, INCLUDING CLASSROOMS (100 OCC/GROSS SF OR 20 OCC/NET SF @ CLASSROOMS)
- MERCANTILE (60 OCC/GROSS SF)
- STORAGE, INCLUDING MERCANTILE STORAGE/STOCKING (300 OCC/GROSS SF)

EGRESS CODE NOTES:

1. OCCUPANCY CLASSIFICATIONS PER DSA IR A-26.cc:
   A. CLASSROOMS = B OCCUPANCY WITH LOAD FACTOR OF 20 NET.
   B. CLASSROOMS WITH OCCUPANT LOAD >50 = A-3
   C. SCIENCE CLASSROOMS (EXEMPT AMOUNTS OF HAZARDOUS MATERIALS) = B OCCUPANCY WITH LOAD FACTOR OF 50 NET.
   D. READING ROOM AREAS (COMPUTER AREA, CHAIR & TABLE AREAS) = OCCUPANT LOAD FACTOR OF 50 NET
2. MINIMUM EXIT WIDTH (CBC 1005.1):
   A. DOOR: OCC LOAD x 0.2 EGRESS CAPACITY FACTOR, OR MINIMUM 32" CLEAR BETWEEN STOP & FACE OF DOOR WHEN OPEN 90 DEGREES (CBC 1010.1)
   B. CORRIDOR: OCC LOAD x 0.2 EGRESS CAPACITY FACTOR, OR 44" MINIMUM CLEAR (CBC TABLE 1020.2)
   C. STAIR: OCC LOAD x 0.3 EGRESS CAPACITY FACTOR, OR MINIMUM 44" PER CBC 1011.2
3. EXIT DOORS TO SWING IN DIRECTION OF TRAVEL WHEN OCC LOAD > 50 (CBC 1010.1.2.1)
4. MAXIMUM COMMON PATH OF EGRESS TRAVEL DISTANCE (CBC TABLE 1006.2.1)
   A. A, M OCCUPANCY WITH SPRINKLER SYSTEM = 75'
   B. B OCCUPANCY WITH SPRINKLER SYSTEM = 100'
   C. MAXIMUM OCCUPANT LOAD OF SPACE = 49
5. MAXIMUM EXIT ACESS TRAVEL DISTANCE WITH AUTOMATIC SPRINKLERS (CBC TABLE 1017.2):
   A. B OCCUPANCY = 300 FEET
   B. A, M, S-1 = 250 FEET
   C. TRAVEL DISTANCE SPECIFIED IN TABLE 1017.2 SHALL BE INCREASED UP TO AN ADDITIONAL 100' PROVIDED THE LAST PORTION OF THE EXIT ACCESS LEADING TO THE EXIT OCCURS ON AN EXTERIOR EGRESS BALCONY.
6. MAXIMUM DEAD-END CORRIDOR (CBC 1020.4) = 50' WITH AUTOMATIC SPRINKLER SYSTEM THROUGHOUT
7. CORRIDOR FIRE-RATING WHEN OCCUPANT LOAD >30 (CBC TABLE 1020.1)
   A. A, B, M, S OCCUPANCIES = NON-RATED WITH SPRINKLER SYSTEM
8. HORIZONTAL EXITS:
   A. NUMBER OF EXITS WITHIN THE REFUGE AREA FROM THE HORIZONTAL EXIT IS NOT REQUIRED TO INCLUDE THE NUMBER OF OCCUPANTS SERVED BY THE HORIZONTAL EXIT (CBC 1026.4.2)

NOLL & TAM ARCHITECTS
729 Heinz Avenue
Berkeley, CA 94710
tel 510.542.2200
fax 510.542.2201

ARCHITECTS SEAL

LICENSED ARCHITECT — CHRISTOPHER NOLL — No. C15916 — REN. 12-31-21 — STATE OF CALIFORNIA

APPROVALS

FILE NUMBER: 07-C1

DIVISION OF THE STATE ARCHITECT
APP# 01-117630
ACS_____ FLS_____ SSS_____
Date:

PROJECT TITLE

CONTRA COSTA CCD
D-4002
DVC SAN RAMON CAMPUS EXPANSION & RENOVATION

1690 Watermill Rd.
San Ramon, CA 94582

ISSUE TITLE
INCREMENT 1 - RENOVATION

ISSUE DATE 4/26/19
NOLL & TAM JOB NUMBER 21630

REVISIONS
| | DATE | DESCRIPTION |

SHEET TITLE
OCCUPANCY & EGRESS PLAN - 1ST FLOOR

SHEET NUMBER
G2.12.1

10/11/2021 2:38:45 PM C:\Users\phan.dung\Documents\Revit Locals\DVCSR Expansion_Central 2020_phan.dung@nollandtam.com.rvt

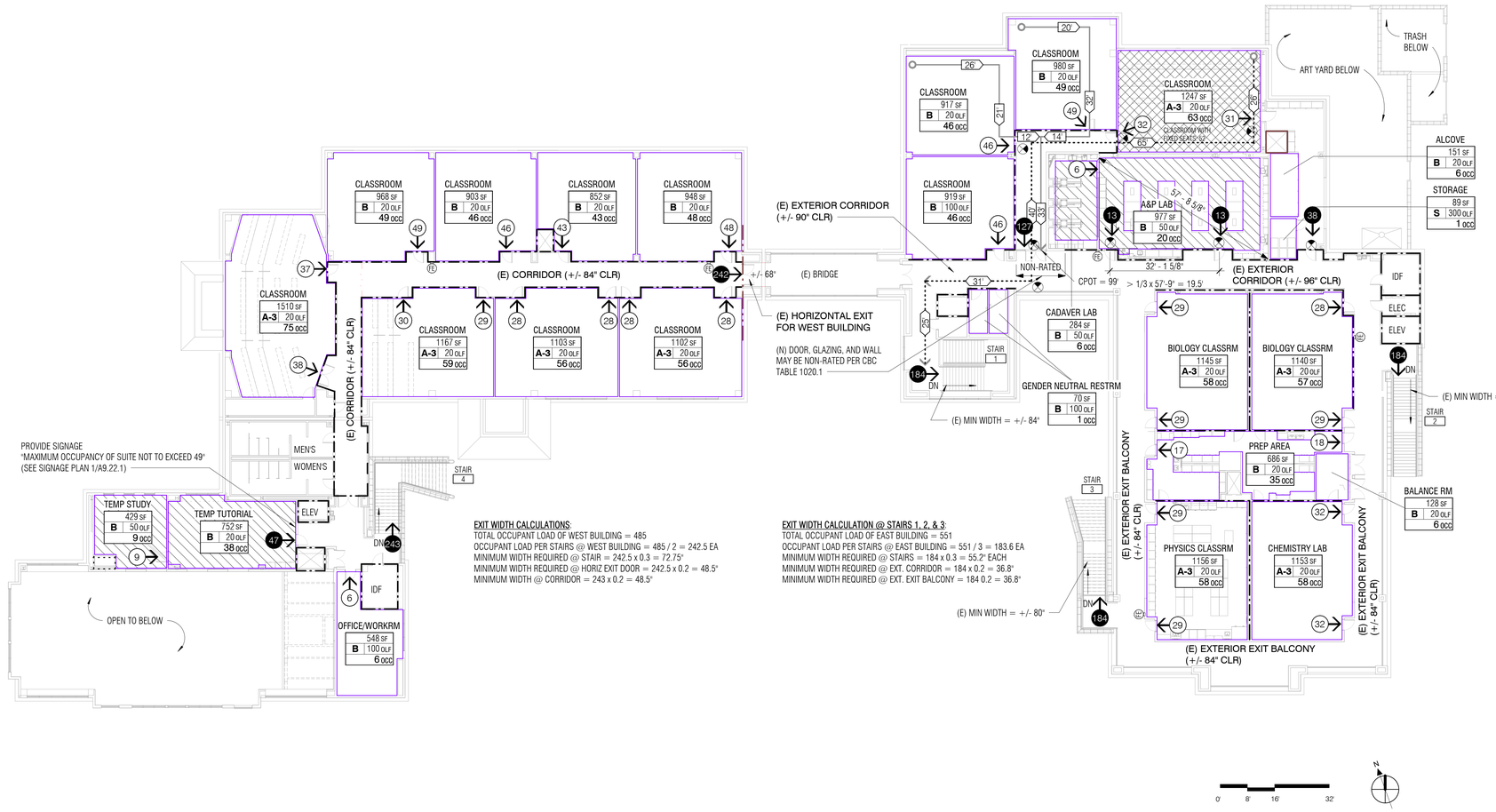

1 FLOOR 2 OCCUPANCY / EXITING
62.13.1 — 1/16" = 1'-0"

SHEET NOTES:

1. HATCHED AREAS INDICATE AREAS OF RENOVATION WORK.
2. EXIT SIGN LOCATIONS ARE SHOWN IN AREA OF WORK ONLY AND ARE DIAGRAMMATIC. SEE RCP's AND ELECTRICAL LIGHTING PLANS FOR INFORMATION REGARDING EXISTING OR NEW, LOCATION, MOUNTING, AND DIRECTION.

SYMBOL LEGEND

- ASSEMBLY-UNCONCENTRATED / 4000 SF / A-3 15 OLF / 267 OCC — OCCUPANCY TYPE DESCRIPTION; TOTAL ROOM AREA IN SQUARE FEET; OCCUPANT LOAD FACTOR PER CBC TABLE 1004.1.2; TOTAL ROOM OCCUPANCY; OCCUPANCY TYPE PER CBC TABLE 1004.1.2
- 19 — COMMON PATH OF EGRESS TRAVEL (CPOT) CBC SECTION 1014.3 (MAY ALSO INCLUDE EXIT ACCESS TRAVEL DISTANCE)
- 19 — EXIT ACCESS TRAVEL DISTANCE PER CBC SECTION 1017.2
- EXISTING 1- HOUR RATED ASSEMBLY
- EXISTING 2 - HOUR RATED AREA SEPARATION WALL
- NEW 1 - HOUR RATED ASSEMBLY
- 6 — OCCUPANT LOAD
- 24 — ACCUMULATED OCCUPANT LOAD
- FE — (E) FIRE EXTINGUISHER
- EXIT SIGN LOCATION (SEE SHEET NOTE #2)

OCCUPANCY TYPE LEGEND

- ASSEMBLY, UNCONCENTRATED (15 OCC/NET SF)
- BUSINESS, INCLUDING CLASSROOMS (100 OCC/GROSS SF OR 20 OCC/NET SF @ CLASSROOMS)
- MERCANTILE (60 OCC/GROSS SF)
- STORAGE, INCLUDING MERCANTILE STORAGE/STOCKING (300 OCC/GROSS SF)

EGRESS CODE NOTES:

1. OCCUPANCY CLASSIFICATIONS PER DSA IR A-26.cc:
   A. CLASSROOMS = B OCCUPANCY WITH LOAD FACTOR OF 20 NET.
   B. CLASSROOMS WITH OCCUPANT LOAD >50 = A-3
   C. SCIENCE CLASSROOMS (EXEMPT AMOUNTS OF HAZARDOUS MATERIALS) = B OCCUPANCY WITH LOAD FACTOR OF 50 NET.
   D. READING ROOM AREAS (COMPUTER AREA, CHAIR & TABLE AREAS) = OCCUPANT LOAD FACTOR OF 50 NET
2. MINIMUM EXIT WIDTH (CBC 1005.1):
   A. DOOR: OCC LOAD x 0.2 EGRESS CAPACITY FACTOR, OR MINIMUM 32" CLEAR BETWEEN STOP & FACE OF DOOR WHEN OPEN 90 DEGREES (CBC 1010.1)
   B. CORRIDOR: OCC LOAD x 0.2 EGRESS CAPACITY FACTOR, OR 44" MINIMUM CLEAR (CBC TABLE 1020.2)
   C. STAIR: OCC LOAD x 0.3 EGRESS CAPACITY FACTOR, OR MINIMUM 44" PER CBC 1011.2
3. EXIT DOORS TO SWING IN DIRECTION OF TRAVEL WHEN OCC LOAD > 50 (CBC 1010.1.2.1)
4. MAXIMUM COMMON PATH OF EGRESS TRAVEL DISTANCE (CBC TABLE 1006.2.1)
   A. A, M OCCUPANCY WITH SPRINKLER SYSTEM = 75'
   B. B OCCUPANCY WITH SPRINKLER SYSTEM = 100'
   C. MAXIMUM OCCUPANT LOAD OF SPACE = 49
5. MAXIMUM EXIT ACESS TRAVEL DISTANCE WITH AUTOMATIC SPRINKLERS (CBC TABLE 1017.2):
   A. B OCCUPANCY = 300 FEET
   B. A, M, S-1 = 250 FEET
   C. TRAVEL DISTANCE SPECIFIED IN TABLE 1017.2 SHALL BE INCREASED UP TO AN ADDITIONAL 100' PROVIDED THE LAST PORTION OF THE EXIT ACCESS LEADING TO THE EXIT OCCURS ON AN EXTERIOR EGRESS BALCONY.
6. MAXIMUM DEAD-END CORRIDOR (CBC 1020.4) = 50' WITH AUTOMATIC SPRINKLER SYSTEM THROUGHOUT
7. CORRIDOR FIRE-RATING WHEN OCCUPANT LOAD >30 (CBC TABLE 1020.1)
   A. A, B, M, S OCCUPANCIES = NON-RATED WITH SPRINKLER SYSTEM
8. HORIZONTAL EXITS:
   A. NUMBER OF EXITS WITHIN THE REFUGE AREA FROM THE HORIZONTAL EXIT IS NOT REQUIRED TO INCLUDE THE NUMBER OF OCCUPANTS SERVED BY THE HORIZONTAL EXIT (CBC 1026.4.2)

NOLL & TAM ARCHITECTS
729 Heinz Avenue
Berkeley, CA 94710
tel 510.542.2200
fax 510.542.2201

ARCHITECTS SEAL

LICENSED ARCHITECT — CHRISTOPHER NOLL — No. C15916 — REN. 12-31-21 — STATE OF CALIFORNIA

APPROVALS

FILE NUMBER: 07-C1

DIVISION OF THE STATE ARCHITECT
APP# 01-117630
ACS_____FLS_____SSS_____
Date:

PROJECT TITLE

CONTRA COSTA CCD
D-4002
DVC SAN RAMON CAMPUS EXPANSION & RENOVATION

1690 Watermill Rd.
San Ramon, CA 94582

ISSUE TITLE
INCREMENT 1 - RENOVATION

ISSUE DATE 4/26/19
NOLL & TAM JOB NUMBER 21630

REVISIONS

	DATE	DESCRIPTION

SHEET TITLE
OCCUPANCY & EGRESS PLAN - 2ND FLOOR

SHEET NUMBER
G2.13.1

10/11/2021 2:38:51 PM C:\Users\phan.dung\Documents\Revit Locals\DVCSR Expansion_Central 2020_phan.dung@nollandtam.com.rvt

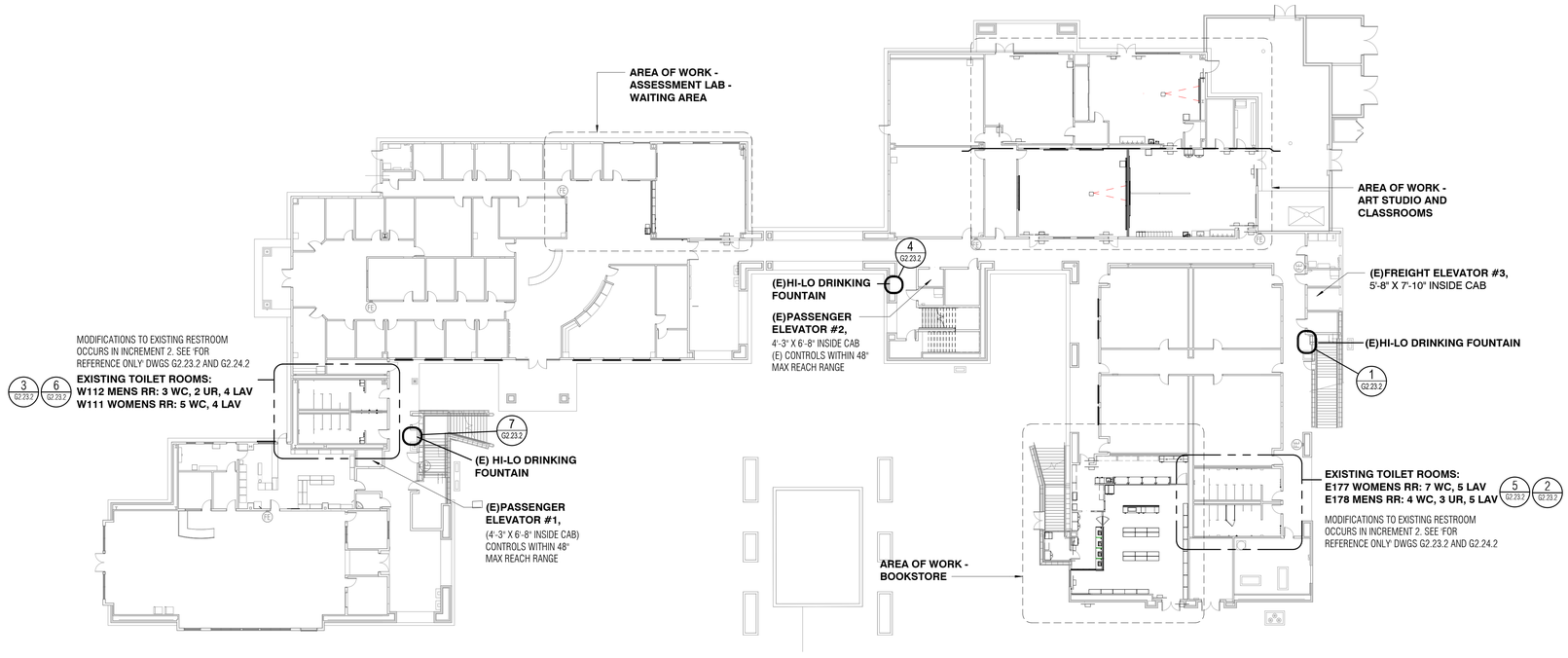

1 G2.21.1 **01 - FLOOR - EXISTING RESTROOMS OVERVIEW - Increment 1**
1" = 20'-0"

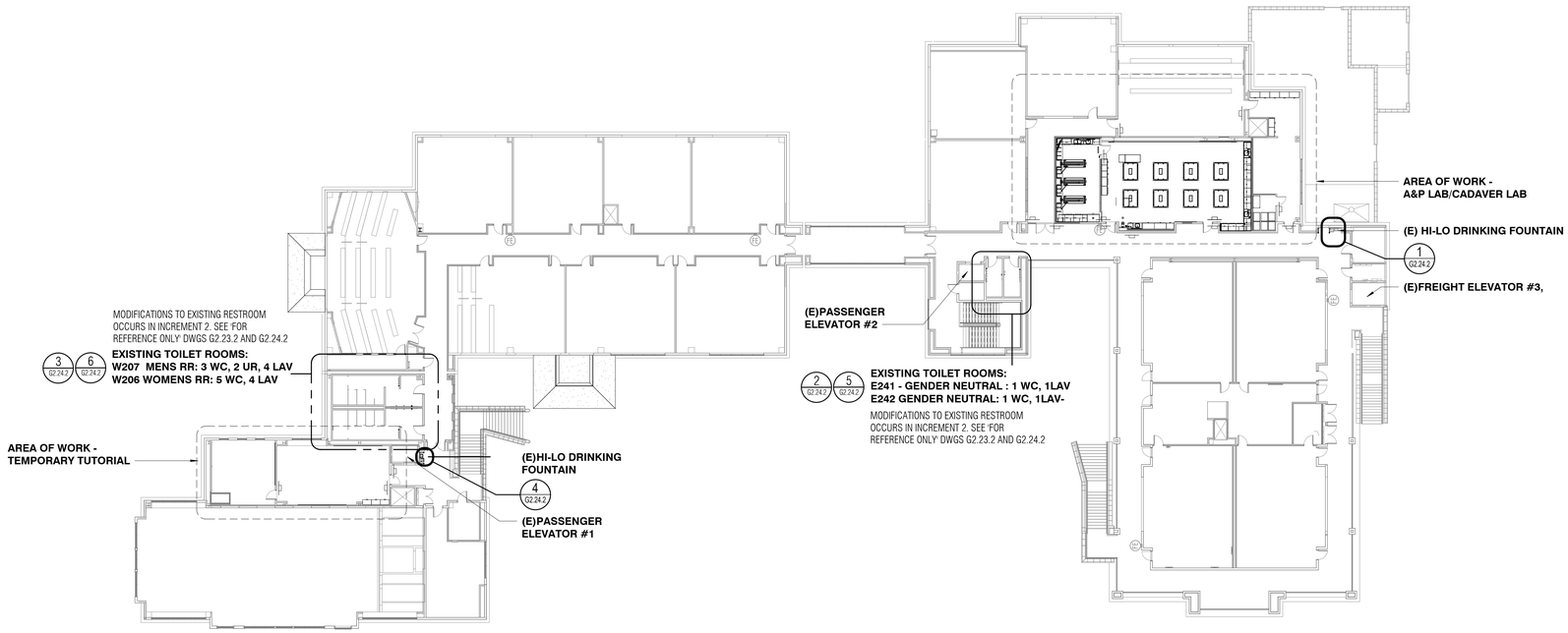

2 G2.21.1 **02 - FLOOR - EXISTING RESTROOMS OVERVIEW- Increment 1**
1" = 20'-0"

NOLL & TAM ARCHITECTS
729 Heinz Avenue
Berkeley, CA 94710
tel 510.542.2200
fax 510.542.2201

ARCHITECTS SEAL

LICENSED ARCHITECT
CHRISTOPHER NOLL
No. C15916
REN. 12-31-21
STATE OF CALIFORNIA

APPROVALS
FILE NUMBER: 07-C1
DIVISION OF THE STATE ARCHITECT
APP# 01-117630
ACS_____FLS_____SSS_____
Date:

PROJECT TITLE
CONTRA COSTA CCD
D-4002
DVC SAN RAMON CAMPUS EXPANSION & RENOVATION
1690 Watermill Rd.
San Ramon, CA 94582

ISSUE TITLE
INCREMENT 1 - RENOVATION

ISSUE DATE 4/26/19
NOLL & TAM JOB NUMBER 21630

REVISIONS
| DATE | DESCRIPTION

SHEET TITLE
EXISTING RESTROOM SUMMARY - INCREMENT 1

SHEET NUMBER
G2.21.1

10/11/2021 2:38:54 PM C:\Users\phan.dung\Documents\Revit Locals\DVCSR Expansion_Central 2020_phan.dung@nollandtam.com.rvt

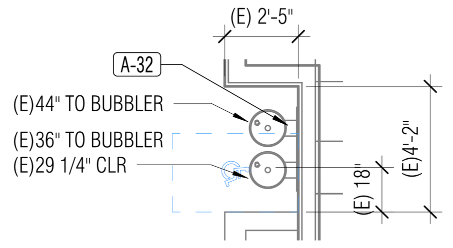

7 FLOOR 1 (EXISTING) DRINKING FOUNTAIN 3
G2.23.2 1/4" = 1'-0"

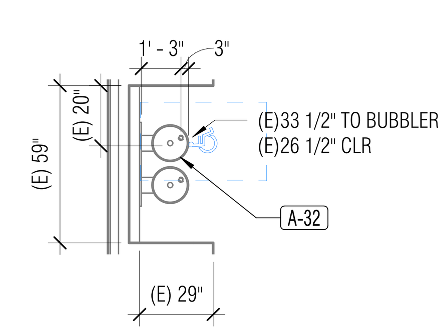

4 FLOOR 1 (EXISTING) DRINKING FOUNTAIN 2
G2.23.2 1/4" = 1'-0"

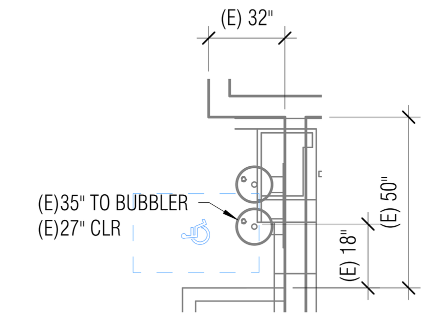

1 FLOOR 1 (EXISTING) DRINKING FOUNTAIN 1
G2.23.2 1/4" = 1'-0"

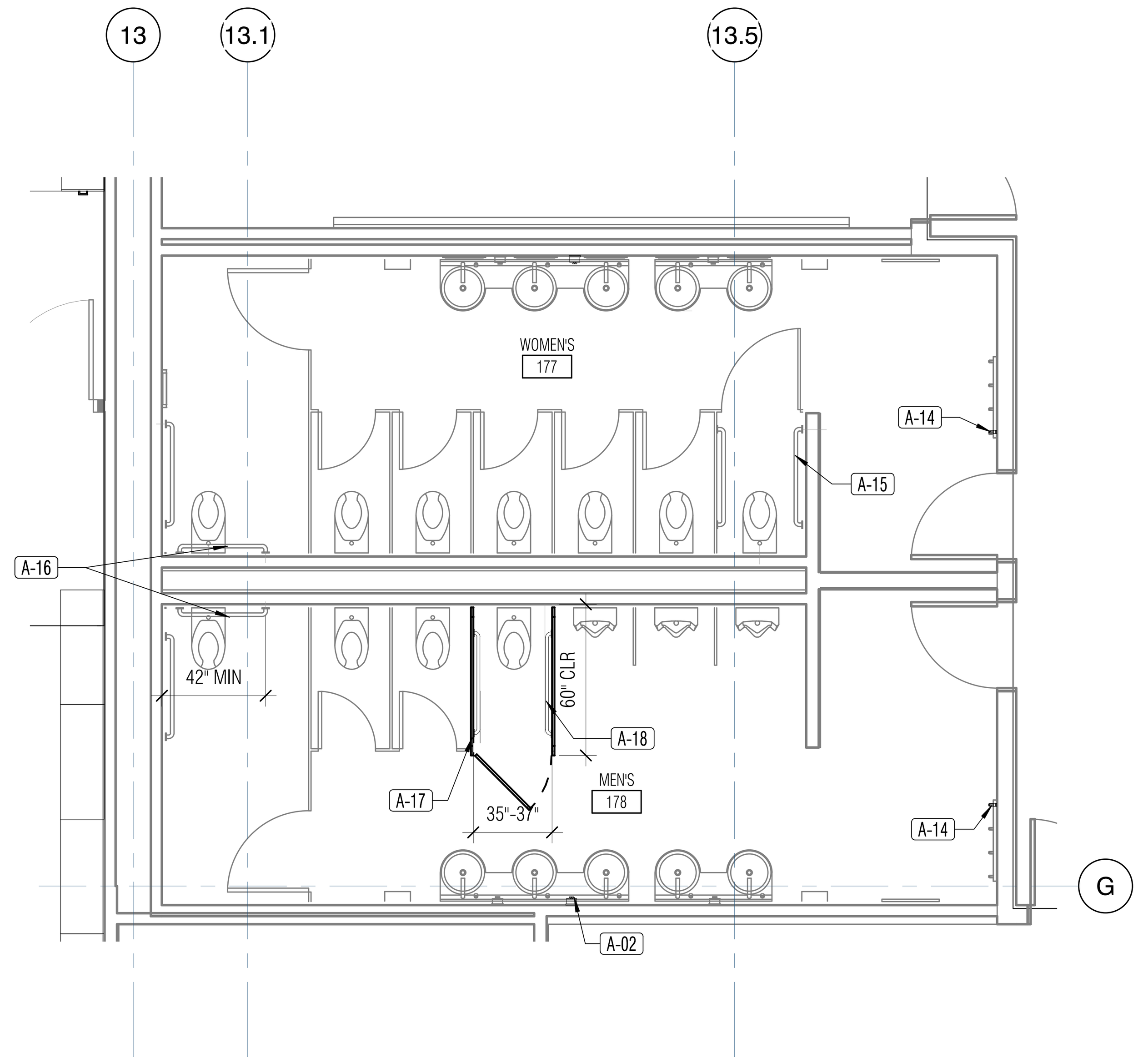

5 LEVEL 1 - FLOOR PLAN - WOMENS 177, MENS 178
G2.23.2 1/4" = 1'-0"

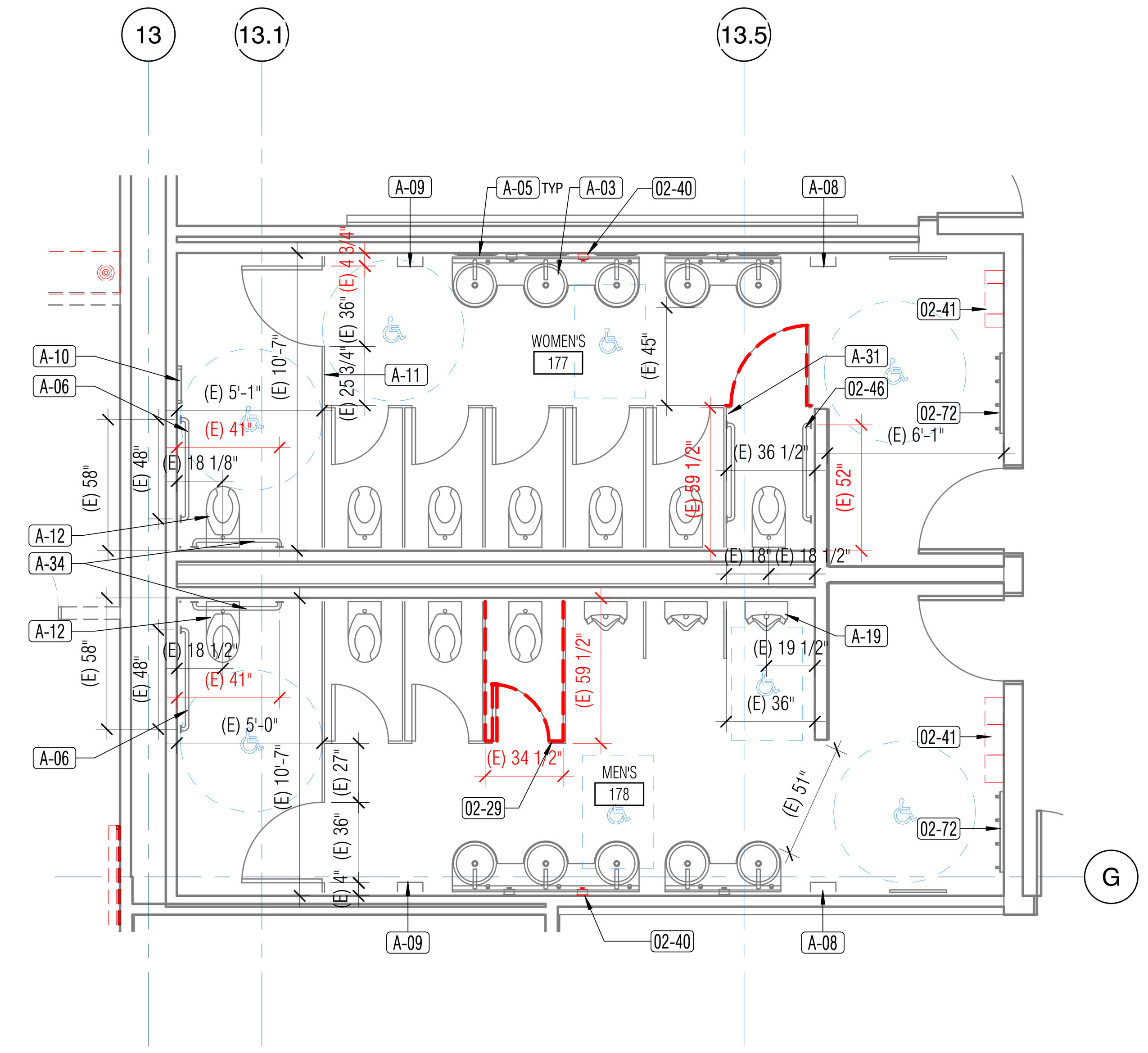

2 LEVEL 1 - FLOOR PLAN (EXISTING) - WOMENS 177, MENS 178
G2.23.2 1/4" = 1'-0"

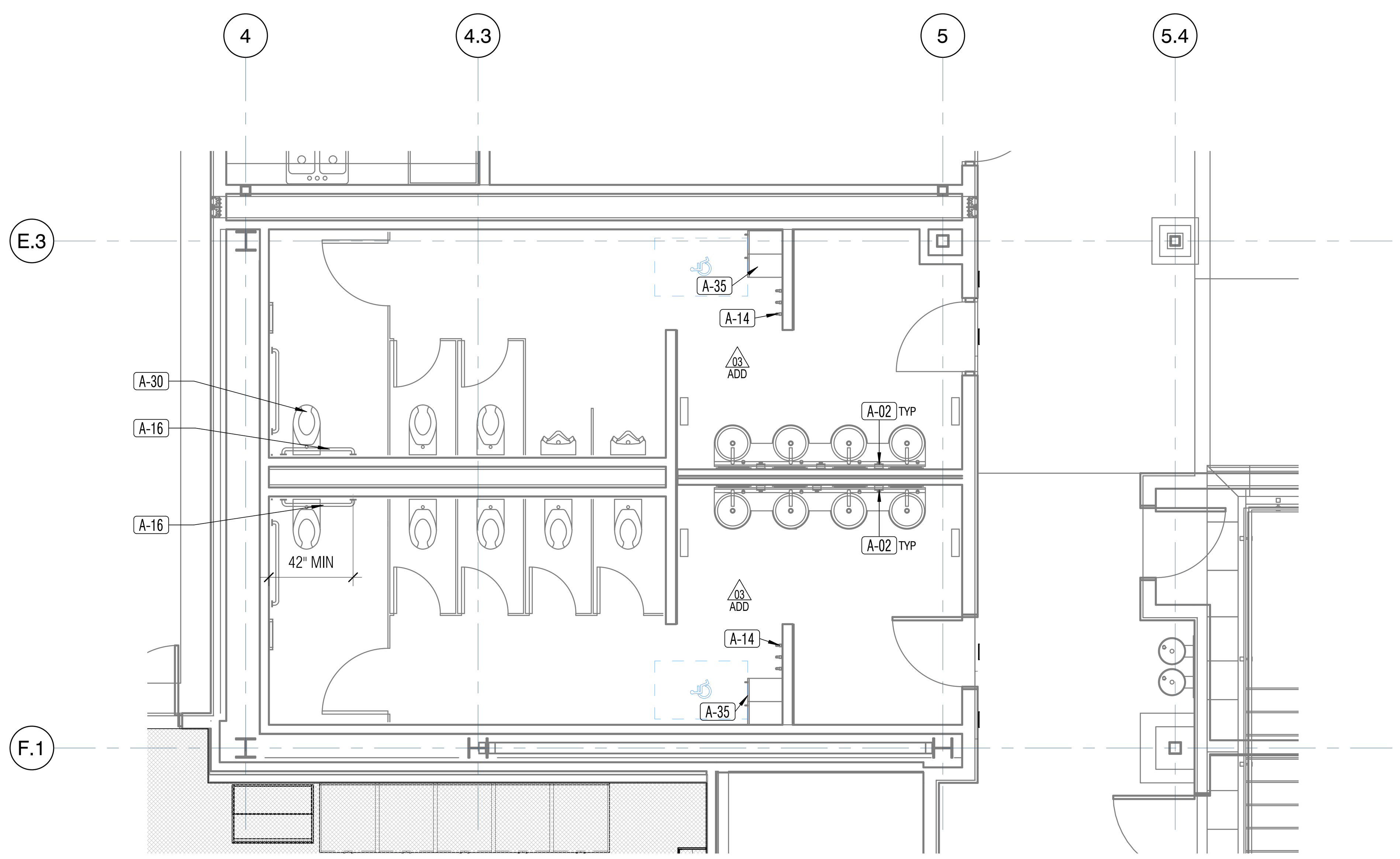

6 LEVEL 1 - FLOOR PLAN - WOMENS 111, MENS 112
G2.23.2 1/4" = 1'-0"

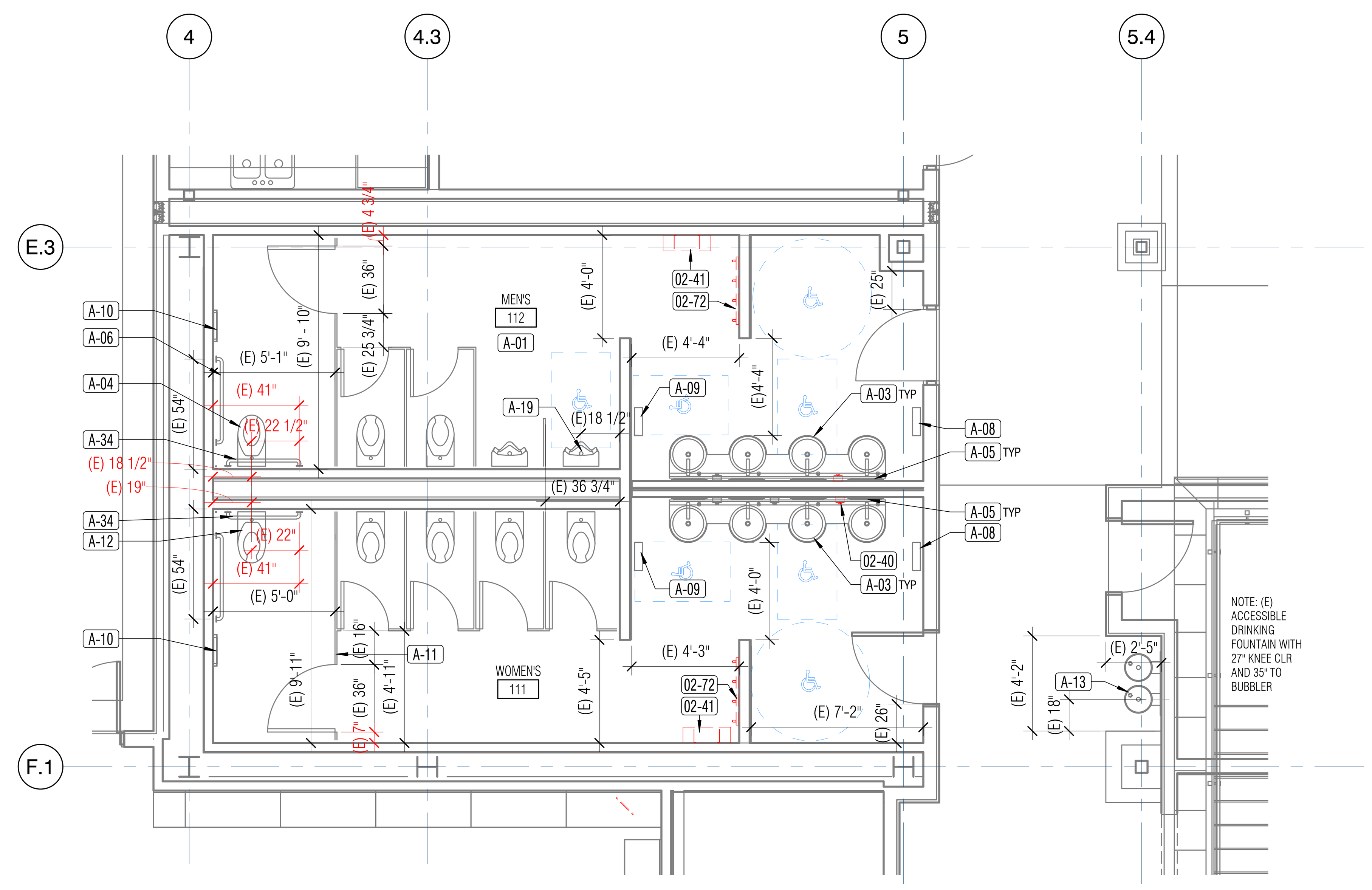

3 LEVEL 1 - FLOOR PLAN (EXISTING) - WOMENS 111, MENS 112
G2.23.2 1/4" = 1'-0"

GENERAL NOTES

1. EXISTING RESTROOMS AND DRINKING FOUNTAIN CONSTRUCTED UNDER THE SAN RAMON VALLEY CENTER PROJECT - DSA# 01-105719
2. EXISTING SIGNAGE ON RESTROOM DOOR AND ADJACENT TO DOOR, SIGNAGE, WITH EXCEPTION OF GENDER NEUTRAL RESTROOMS, INSTALLED UNDER DSA# 01-105719
3. REMOVE AND REPLACE EXISTING RESTROOM SIGNAGE. SEE SIGNAGE PLAN
4. REMOVE AND REPLACE EXISTING TOILET PAPER DISPENSER IN EACH ACCESSIBLE TOILET STALL. SEE MOUNTING HEIGHT

KEY NOTES

Key Value	Keynote Text
02-29	REMOVE PORTION OF EXISTING PARTITION AS INDICATED
02-40	REMOVE AND SALVAGE EXISTING SOAP DISPENSER FOR RELOCATION TO LOWER HEIGHT
02-41	REMOVE AND SALVAGE EXISTING 8" STAINLESS STEEL SHELF. RETURN TO OWNER
02-46	REMOVE AND SALVAGE EXISTING GRAB BARS, BOTH SIDES @ AMBULATORY STALL FOR RELOCATION
02-72	REMOVE AND SALVAGE EXISTING HOOK STRIP - NON-ADA HEIGHT. RETURN TO OWNER. SEE KEYNOTE FOR NEW ACCESSIBLE HOOK AT LOWER HEIGHT
A-01	LESS THAN TOTAL (6) PLUMBING FIXTURES (WC + URINALS) DOES NOT REQUIRE AN AMBULATORY STALL.
A-02	REMOUNT EXISTING SOAP DISPENSER TO ACCESSIBLE MOUNTING HEIGHT
A-03	EXISTING ACCESSIBLE MULTI-STATION LAVATORY - 29" MIN KNEE CLEAR, 34" MAX TO TOP (ACORN ENG -MODEL 3704, 3703, OR 3702)
A-04	REMOVE EXISTING TOILET SEAT COVER, TOP OF SEAT AT 20" AFF
A-05	EXISTING WALL-MOUNTED MIRROR, 39" TO REFLECTIVE SURFACE
A-06	EXISTING SIDE 48" GRAB BAR, WITHIN 33" MIN, 36" MAX AFF, 1-1/2" MAX DIAM.
A-08	EXISTING PAPER TOWEL DISPENSER, WITHIN THE 40" MAX OPERABLE PART
A-09	EXISTING HAND DRYER, WITHIN THE 40" MAX OPERABLE PART
A-10	EXISTING SEAT COVER DISPENSER, WITHIN THE 40" MAX OPERABLE PART
A-11	EXISTING TOILET PARTITION, @ ACCESSIBLE COMPARTMENT - ACCESSIBLE DOOR WITH SELF-CLOSING HARDWARE, U-SHAPE HANDLE
A-12	EXISTING WATER CLOSET - SENSORED, WITHIN 17" MIN TO 19" TOP OF SEAT
A-13	EXISTING HI-LO DRINKING FOUNTAIN
A-14	NEW SURFACE MOUNTED SINGLE HAT AND COAT HOOK. (3) AT ACCESSIBLE MOUNTING HEIGHT (48" MAX TO TOP), 6" OC SPACING
A-15	REMOUNT EXISTING GRAB BARS, BOTH SIDES @ AMUBULATORY STALL, 54" MIN FROM REAR WALL
A-16	REMOUNT EXISTING GRAB BAR @ ACCESSIBLE COMPARTMENT
A-17	NEW TOILET PARTITION - FLOOR MOUNTED, TO MATCH EXISTING, FOR AMBULATORY STALL. REMOUNT ANY EXISTING ACCESSORIES MOUNTED ON PARTITION, MIN 32" DOOR WITH SELF-CLOSING HARDWARE, U-SHAPE HANDLE AND LATCH
A-18	NEW 42" GRAB BARS, BOTH SIDES OF AMBULATORY STALL
A-19	EXISTING ACCESSIBLE URINAL - SENSORED - LIP WITHIN 17" MAX AFF
A-30	NEW TOILET SEAT COVER AT ACCESSIBLE STALL, TOP OF SEAT AT 19" MAX. AFF
A-31	MODIFY DEPTH OF AMBULATORY STALL TO 60" MIN. TRIM AND REPLACE DOOR AND PARTITION AS REQUIRED.
A-32	REMOVE AND RAISE THE DRINKING FOUNTAIN FOR 27" MIN CLR BELOW ACCESSIBLE SINK. MODIFY PLUMBING AS REQUIRED, PATCH AND REPAIR EXTERIOR PLASTER FINISH IN KIND
A-34	REMOVE AND SALVAGE EXISTING GRAB BARS FOR RE-INSTALLATION AT ACCESSIBLE DISTANCE FROM WALL AND WC
A-35	NEW 2 TIER LOCKERS (12"W X 18"X 36" H @ EACH LOCKER) - TOTAL (4) LOCKERS INCLUDING (1) ACCESSIBLE LOCKER, ON 6" LEGS, SECURE TO WALL, BACKING AS REQUIRED.

03 ADD

THIS SHEET IS ONLY FOR REFERENCE ONLY. RESTROOM MODIFICATIONS OCCUR IN INCREMENT 2

APPROVALS

NOLL & TAM ARCHITECTS
729 Heinz Avenue
Berkeley, CA 94710
tel 510.542.2200
fax 510.542.2201

ARCHITECTS SEAL
LICENSED ARCHITECT CHRISTOPHER NOLL No. C15916 REN. 12-31-21 STATE OF CALIFORNIA

PROJECT TITLE
CONTRA COSTA CCD
D-4002
DVC SAN RAMON CAMPUS EXPANSION & RENOVATION
1690 Watermill Rd.
San Ramon, CA 94582

ISSUE TITLE
INCREMENT 2

ISSUE DATE	5/30/2019
NOLL & TAM JOB NUMBER	21630

REVISIONS

DATE	DESCRIPTION
8/27/19	INC 2 - ADDENDUM 03
10/15/19	INC 2 - ADDENDUM 03 REV

SHEET TITLE
ACCESSIBILITY COMPLIANCE PLANS - RESTROOMS 1ST FLOOR

SHEET NUMBER
G2.23.2

10/11/2021 2:39:00 PM C:\Users\phan.dung\Documents\Revit Locals\DVCSR Expansion_Central 2020_phan.dung@nollandtam.com.rvt

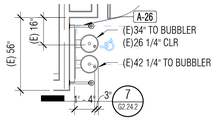

4 G2.24.2 **FLOOR 2 (EXISTING) DRINKING FOUNTAIN 2 -WEST**
1/4" = 1'-0"

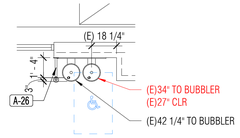

1 G2.24.2 **FLOOR 2 (EXISTING) DRINKING FOUNTAIN 1 - EAST**
1/4" = 1'-0"

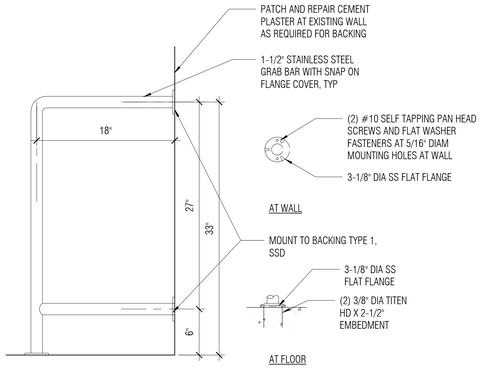

7 G2.24.2 **CANE DETECTION RAIL AT DRINKING FOUNTAIN**
1 1/2" = 1'-0"

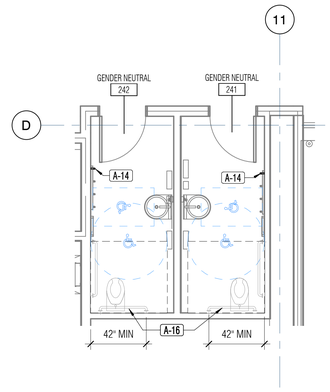

5 G2.24.2 **LEVEL 2 - FLR PLAN - GENDER NEUTRAL 241, 242**
1/4" = 1'-0"

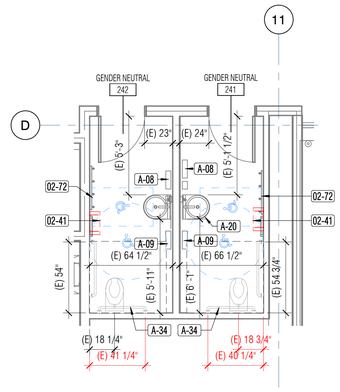

2 G2.24.2 **LEVEL 2 - FLR PLAN (EXISTING) - GENDER NEUTRAL 241, 242**
1/4" = 1'-0"

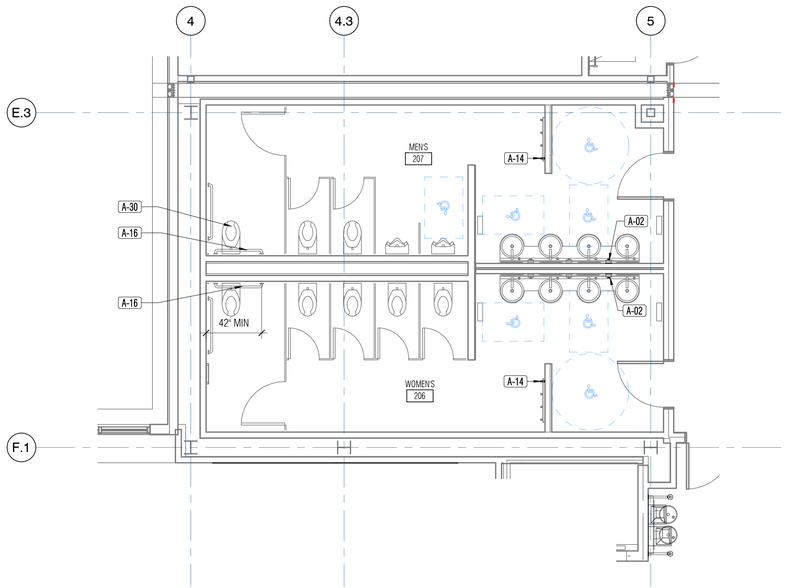

6 G2.24.2 **LEVEL 2 - FLOOR PLAN - WOMENS 206, MEN'S 207**
1/4" = 1'-0"

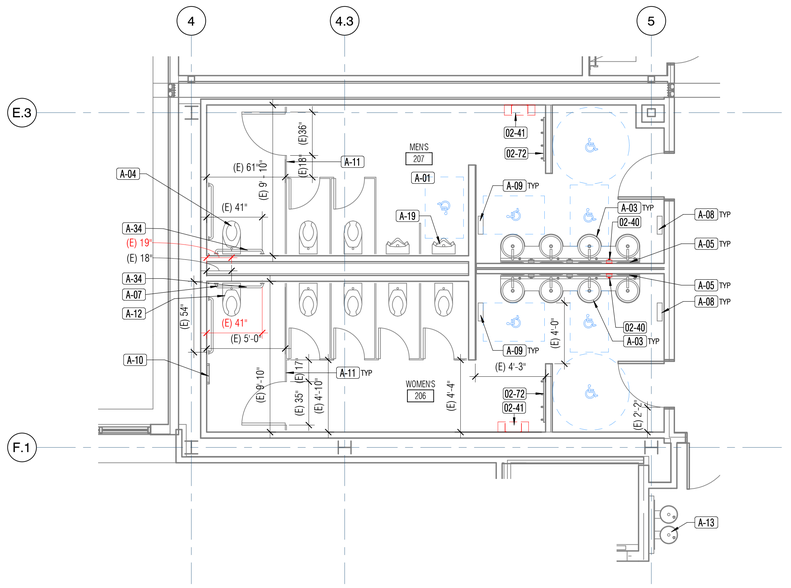

3 G2.24.2 **LEVEL 2 - FLOOR PLAN (EXISTING) - WOMENS 206, MEN'S 207**
1/4" = 1'-0"

GENERAL NOTES

1. EXISTING RESTROOMS AND DRINKING FOUNTAIN CONSTRUCTED UNDER THE SAN RAMON VALLEY CENTER PROJECT - DSA# 01-105719
2. EXISTING SIGNAGE ON RESTROOM DOOR AND ADJACENT TO DOOR, TO REMAIN. SIGNAGE , WITH EXCEPTION OF GENDER NEUTRAL RESTROOMS, INSTALLED UNDER DSA# 01-105719
3. REMOVE AND REPLACE EXISTING RESTROOM SIGNAGE. SEE SIGNAGE PLAN
4. REMOVE AND REPLACE EXISTING TOILET PAPER DISPENSER IN ACCESSIBLE TOILET STALL IN WEST BUILDING RESTROOM W111, W112, W206, AND W207. REMOUNT PER MOUNTING DISTANCES & HEIGHT PER G3.21.0
5. REFER TO G3.21.0 FOR MOUNTING HEIGHTS/STANDARD CODE AND ACCESSIBILITY DETAILS
6. PROVIDE BACKING TYPE 1 AND TYPE 2 AS REQUIRED FOR MOUNTING OF GRABBAR AND RESTROOM ACCESSORIES. REPLACE WALL ASSEMBLY AND FINISHES IN KIND

KEY NOTES

Key Value	Keynote Text
02-40	REMOVE AND SALVAGE EXISTING SOAP DISPENSER FOR RELOCATION TO LOWER HEIGHT
02-41	REMOVE AND SALVAGE EXISTING 8" STAINLESS STEEL SHELF. RETURN TO OWNER
02-72	REMOVE AND SALVAGE EXISTING HOOK STRIP - NON-ADA HEIGHT. RETURN TO OWNER. SEE KEYNOTE FOR NEW ACCESSIBLE HOOK AT LOWER HEIGHT
A-01	LESS THAN TOTAL (6) PLUMBING FIXTURES (WC + URINALS) DOES NOT REQUIRE AN AMBULATORY STALL.
A-02	REMOUNT EXISTING SOAP DISPENSER TO ACCESSIBLE MOUNTING HEIGHT
A-03	EXISTING ACCESSIBLE MULTI-STATION LAVATORY - 29" MIN KNEE CLEAR, 34" MAX TO TOP (ACORN ENG -MODEL 3704, 3703, OR 3702)
A-04	REMOVE EXISTING TOILET SEAT COVER, TOP OF SEAT AT 20" AFF
A-05	EXISTING WALL-MOUNTED MIRROR, 39" TO REFLECTIVE SURFACE
A-07	EXISTING REAR 36" GRAB BAR, WITHIN 33" MIN, 36" MAX, AFF, 1-1/2" MAX DIAM.
A-08	EXISTING PAPER TOWEL DISPENSER, WITHIN THE 40" MAX OPERABLE PART
A-09	EXISTING HAND DRYER. WITHIN THE 40" MAX OPERABLE PART
A-10	EXISTING SEAT COVER DISPENSER, WITHIN THE 40" MAX OPERABLE PART
A-11	EXISTING TOILET PARTITION, @ ACCESSIBLE COMPARTMENT - ACCESSIBLE DOOR WITH SELF-CLOSING HARDWARE, U-SHAPE HANDLE
A-12	EXISTING WATER CLOSET - SENSORED, WITHIN 17" MIN TO 19" TOP OF SEAT
A-13	EXISTING HI-LO DRINKING FOUNTAIN
A-14	NEW SURFACE MOUNTED SINGLE HAT AND COAT HOOK. (3) AT ACCESSIBLE MOUNTING HEIGHT (48" MAX TO TOP), 6" OC SPACING
A-16	REMOUNT EXISTING GRAB BAR @ ACCESSIBLE COMPARTMENT
A-19	EXISTING ACCESSIBLE URINAL - SENSORED - LIP WITHIN 17" MAX AFF
A-20	EXISTING SINGLE ACCESSSIBLE LAVATORY - 29" MIN KNEE CLEAR, 34" MAX TO TOP (ACORN ENG - MODEL 3701)
A-26	PROVIDE STAINLESS STEEL CANE DETECTION RAIL AT DRINKING FOUNTAIN, EXTEND 18" HORIZONTAL FROM WALL, WELDED HORIZONTAL SUPPORT BAR AND MOUNTED INTO THE FLOOR
A-30	NEW TOILET SEAT COVER AT ACCESSIBLE STALL, TOP OF SEAT AT 19" MAX. AFF
A-34	REMOVE AND SALVAGE EXISTING GRAB BARS FOR RE-INSTALLATION AT ACCESSIBLE DISTANCE FROM WALL AND WC

THIS SHEET IS ONLY FOR REFERENCE ONLY. RESTROOM MODIFICATIONS OCCUR IN INCREMENT 2

APPROVALS

NOLL & TAM ARCHITECTS
729 Heinz Avenue
Berkeley, CA 94710
tel 510.542.2200
fax 510.542.2201

ARCHITECTS SEAL

LICENSED ARCHITECT
CHRISTOPHER NOLL
No. C15916
REN. 12-31-21
STATE OF CALIFORNIA

PROJECT TITLE

CONTRA COSTA CCD
D-4002
DVC SAN RAMON CAMPUS EXPANSION & RENOVATION

1690 Watermill Rd.
San Ramon, CA 94582

ISSUE TITLE
INCREMENT 2

ISSUE DATE 5/30/2019
NOLL & TAM JOB NUMBER 21630

REVISIONS
| DATE | DESCRIPTION

SHEET TITLE
ACCESSIBILITY COMPLIANCE PLANS - RESTROOMS 2ND FLOOR

SHEET NUMBER
G2.24.2

10/11/2021 2:39:05 PM C:\Users\phan.dung\Documents\Revit Locals\DVCSR Expansion_Central 2020_phan.dung@nollandtam.com.rvt

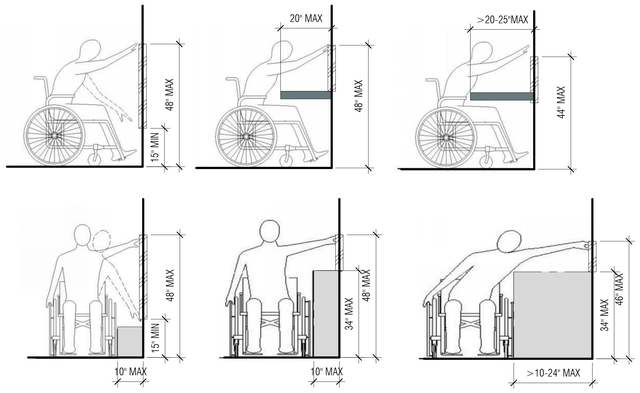

17 G3.21.0 REACH RANGES(REFERENCE)
1/2" = 1'-0"

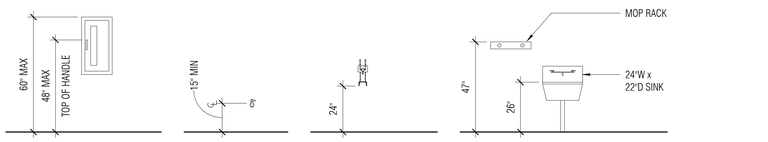

FIRE EXTINGUISHER, FIRE HOSE CAB | HOSE BIBB | MIXING VALVE w/ HOSE RACK | JANITOR'S SINK

SHELF AND ROD | COAT HOOKS | LOCKERS

NOTE: 11B-309.4 CBC
OPERATION: OPERABLE PARTS SHALL BE OPERABLE WITH ONE HAND AND SHALL NOT REQUIRE TIGHT GRASPING, PINCHING OR TWISTING OF THE WRIST. THE FORCE REQUIRED TO ACTIVATE OPERABLE PARTS SHALL BE 5 POUNDS MAX.

18 G3.21.0 TYP MOUNTING HTS (REFERENCE)
3/8" = 1'-0"

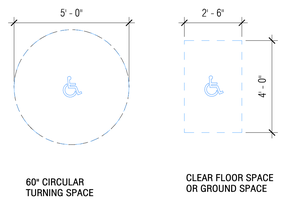

60" CIRCULAR TURNING SPACE | CLEAR FLOOR SPACE OR GROUND SPACE

19 G3.21.0 ACCESSIBLE SYMBOLS (REFERENCE)
3/8" = 1'-0"

15 G3.21.0 PROTRUDING OBJECTS (REFERENCE)
3/8" = 1'-0"

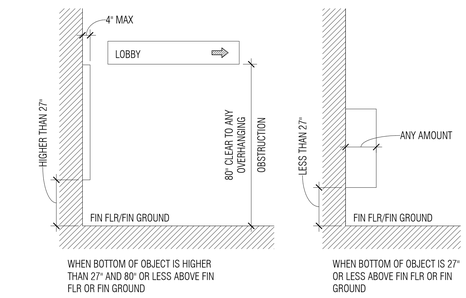

WHEN BOTTOM OF OBJECT IS HIGHER THAN 27" AND 80" OR LESS ABOVE FIN FLR OR FIN GROUND

WHEN BOTTOM OF OBJECT IS 27" OR LESS ABOVE FIN FLR OR FIN GROUND

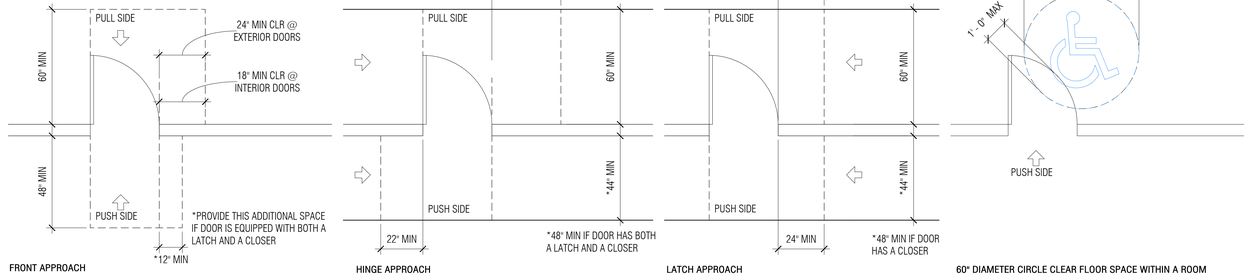

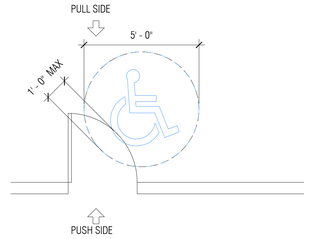

60" DIAMETER CIRCLE CLEAR FLOOR SPACE WITHIN A ROOM

APPLICABLE TO MULTI-STALLTOILET OR BATHING ROOM DOORS ONLY

2016 CBC 11B-603.2.3: DOORS TO ACCESSIBLE WATER CLOSET COMPARTMENTS SHALL BE PERMITTED TO ENCROACH INTO THE TURNING SPACE WITHOUT LIMITATION. OTHER THAN DOORS TO ACCESSIBLE WATER CLOSET COMPARTMENTS, A DOOR, IN ANY POSITION SHALL BE PERMITTED TO ENCROACH INTO THE TURNING SPACE BY 12" MAXIMUM.

NOTE:
1. LEVEL IS DEFINED AS 2% IN ANY DIRECTION.
2. ALL DOORS REQUIRING FULL USER PASSAGE MUST BE 3'-0"x6'-8" MIN OR HUNG TO PROVIDE 32" MIN.
3. SYMBOL DENOTING "CLEAR DIRECTION OF APPROACH"

9 G3.21.0 LEVEL MANEUVERING CLEARANCES AT DOORS (REFERENCE)
3/8" = 1'-0"

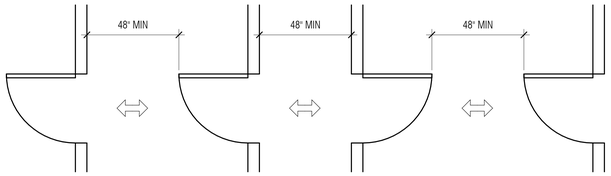

NOTE:
1. RECEPTACLES, POWER/DATA, SWITCHES/CONTROLS/THERMOSTATS SHALL BE INSTALLED AT A RANGE OF 15" TO BOTTOM OF BOX AND 48" AFF TO TOP OF BOX.
2. FIRE STROBES ARE TO BE MOUONTED 80" MIN. AFF TO 96" MAX. AFF TO BOTTOM OF LENSE, PER NFPA 72-4-4.4
3. UNLESS OTHERWISE NOTED, MOUNT ELECTRICAL ITEMS AS INDICATED.

10 G3.21.0 DOORS IN SERIES(REFERENCE)
3/8" = 1'-0"

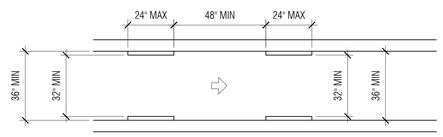

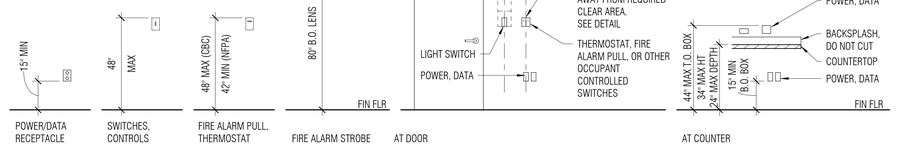

POWER/DATA RECEPTACLE | SWITCHES, CONTROLS | FIRE ALARM PULL, THERMOSTAT | FIRE ALARM STROBE | AT DOOR | AT COUNTER

11 G3.21.0 ACCESSIBLE ROUTE WIDTH(REFERENCE)
3/8" = 1'-0"

6 G3.21.0 ELEC MOUNTING HTS (REFERENCE)
3/8" = 1'-0"

NOTE:
1. LAVATORY FAUCET CONTROLS SHALL BE OPERABLE WITH ONE HAND AND SHALL NOT REQUIRE TIGHT GRASPING, PINCHING OR TWISTING OF THE WRIST. THE FORCE REQUIRED TO ACTIVATE CONTROLS SHALL BE NO GREATER THAN 5 POUNDS.
2. IF MIRROR IS NOT CENTERED OVER FIXTURE THEN 35" MAX AFF.

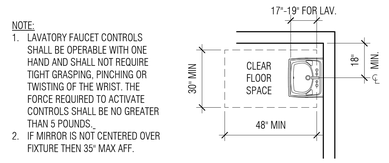

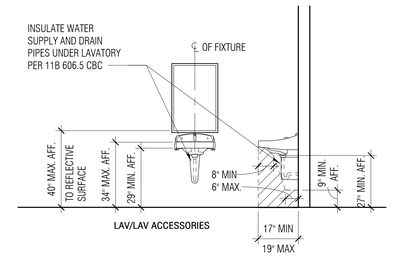

LAV/LAV ACCESSORIES

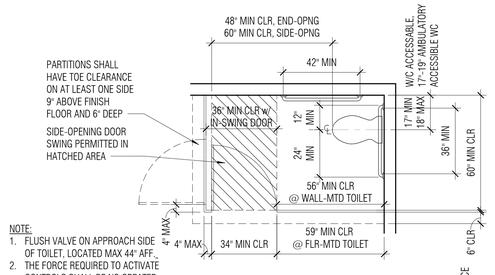

NOTE:
1. FLUSH VALVE ON APPROACH SIDE OF TOILET, LOCATED MAX 44" AFF.
2. THE FORCE REQUIRED TO ACTIVATE CONTROLS SHALL BE NO GREATER THAN 5 POUNDS.
3. GRAB BAR SHALL HAVE GRIPPING SURFACES WITH AN OUTSIDE DIAMETER OF 1 1/4" TO 1 1/2" LOCATED WITH A SPACE BETWEEN THE WALL AND GRAB BAR OF 1 1/2".
4. TOILET PAPER DISPENSER SHALL BE BELOW GRAB BAR.
5. DISPENSERS SHALL NOT BE OF A TYPE THAT CONTROLS DELIVERY OR THAT DOES NOT ALLOW CONTINUOUS FLOW.

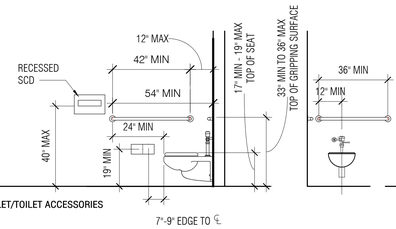

TOILET/TOILET ACCESSORIES

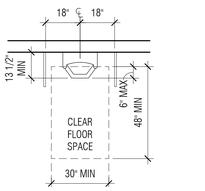

NOTE:
THE FORCE REQUIRED TO ACTIVATE CONTROLS SHALL BE NO GREATER THAN 5 POUNDS.

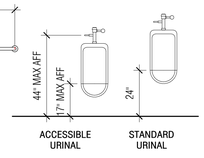

ACCESSIBLE URINAL | STANDARD URINAL

NOTE:
1. WHERE PROVIDED, SANITARY NAPKIN DISPOSAL UNIT SHALL BE MOUNTED ON THE TOILET SIDE WALL, BETWEEN THE TOILET PAPER DISPENSER AND TOILET REAR WALL.

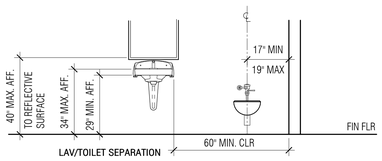

LAV/TOILET SEPARATION

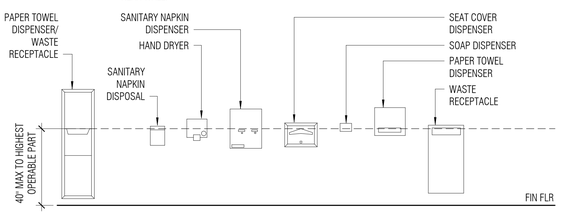

ACCESSORIES

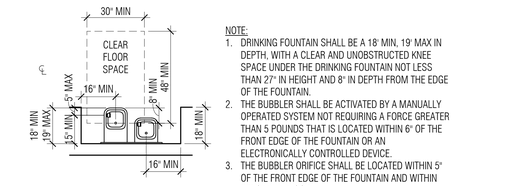

NOTE:
1. DRINKING FOUNTAIN SHALL BE A 18" MIN, 19" MAX IN DEPTH, WITH A CLEAR AND UNOBSTRUCTED KNEE SPACE UNDER THE DRINKING FOUNTAIN NOT LESS THAN 27" IN HEIGHT AND 8" IN DEPTH FROM THE EDGE OF THE FOUNTAIN.
2. THE BUBBLER SHALL BE ACTIVATED BY A MANUALLY OPERATED SYSTEM NOT REQUIRING A FORCE GREATER THAN 5 POUNDS THAT IS LOCATED WITHIN 6" OF THE FRONT EDGE OF THE FOUNTAIN OR AN ELECTRONICALLY CONTROLLED DEVICE.
3. THE BUBBLER ORIFICE SHALL BE LOCATED WITHIN 5" OF THE FRONT EDGE OF THE FOUNTAIN AND WITHIN 36" OF THE FLOOR.
4. THE SPOUT SHALL PROVIDE A FLOW OF WATER AT LEAST 4" HIGH AS TO ALLOW THE INSERTION OF A CUP OR GLASS UNDER THE FLOW OF WATER.
5. WHEN USED, WING WALL OR BARRIERS SHALL PROJECT HORIZ AT LEAST AS FAR AS THE DRINKING FOUNTAIN, AND TO WITHIN 6" VERT FROM THE FLOOR/GROUND.

ACCESSIBLE DRINKING FOUNTAIN OR ELECTRIC WATER COOLER | STANDING DRINKING FOUNTAIN OR ELECTRIC WATER COOLER

12 G3.21.0 TOILET ROOM MOUNTING HEIGHTS(REFERENCE)
3/8" = 1'-0"

NOLL & TAM ARCHITECTS
729 Heinz Avenue
Berkeley, CA 94710
tel 510.542.2200
fax 510.542.2201

APPROVALS

ARCHITECTS SEAL

LICENSED ARCHITECT
CHRISTOPHER NOLL
No. C15916
REN. 12-31-21
STATE OF CALIFORNIA

PROJECT TITLE
CONTRA COSTA CCD
D-4002
DVC SAN RAMON CAMPUS EXPANSION & RENOVATION

1690 Watermill Rd.
San Ramon, CA 94582

ISSUE TITLE
INCREMENT 2

ISSUE DATE 5/30/2019
NOLL & TAM JOB NUMBER 21630

REVISIONS
| | DATE | DESCRIPTION |

SHEET TITLE
MOUNTING HEIGHTS / STANDARD CODE AND ACCESSIBILITY DETAILS

SHEET NUMBER
G3.21.0

10/11/2021 2:39:08 PM C:\Users\phan.dung\Documents\Revit Local\DVCSR Expansion_Central 2020_phan.dung@nollandtam.com.rvt

1 / 04.11.1 **01 - FLOOR PLAN - OVERALL - PHASING**
1" = 20'-0"

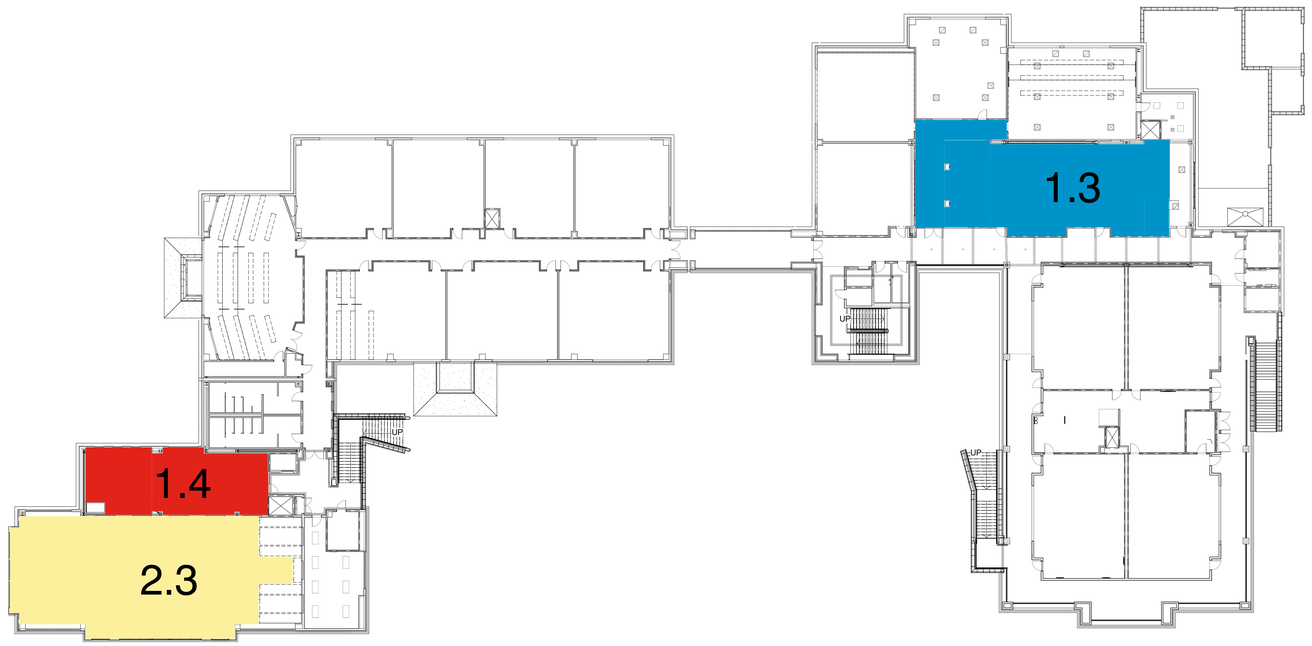

2 / 04.11.1 **02 - FLOOR PLAN - OVERALL - PHASING**
1" = 20'-0"

PROPOSED SEQUENCE OF WORK

INCRMENT 1:
1 .1
WORK BEGINS AT EXISTING READ-STUDY TUTORIAL ROOM SINCE IT CAN CO-EXIST IN THE ASSESSMENT LAB 164 DURING CONSTRUCTION DUE TO DIFFERENT OPERATING HOURS. ONCE THIS NEW AREA WITH WAITING AREA IS COMPLETE, THE ASSESSMENT LAB CAN MOVE IN, VACATE THEIR EXISTING SPACE IN EAST BUILDING. WORK INCLUDES REGRADING OF EXISTING ACCESSIBLE PARKING STALLS TO MAKE THEM CODE & ADA COMPLIANT.

1.2
ONCE CERAMIC STUDIO IS NO LONGER OFFERED, AREA IS AVAILABLE FOR CONSTRUCTION ALONG WITH VACATED ASSESSMENT LAB 164. ONCE DRAWING STUDIO AND ENLARGED CLASSROOM 164 ARE COMPLETE, DRAWING STUDIO CAN BE RELOCATED AND CLASSROOM 164 CAN BE USED ALONG WITH CLASSROOM 162. PAINTING IS INDEPEPENDENT AND MINOR

1.2
ONCE CLASSROOM 162 AND 164 ARE COMPLETE, THE 2ND FLOOR CLASSROOM 229 AND 232 CAN BE RELOCATED DOWNSTAIRS

1.3
WORK FOR THE ANATOMY & PHYSIOLOGY-CADAVER LAB AREAS MAY BEGIN.

1.4
CONFERENCE ROOM AND STORAGE RM ARE TEMPORARY SURGE SPACE FOR THE RELOCATION OF THE MATH-SCIENCE TUTORIAL SPACE.

1.5
WITH VACANCY OF THE TUTORIAL, THE BOOKSTORE SCOPE CAN BEGIN.

INCREMENT 2:
2.1
WORK FOR THE NEW BUILDING CAN BEGIN INDEPENDENTLY OF OTHER SCOPE SINCE IT HOUSES EITHER NEW SCOPE (LIBRARY) OR EXISTING SCOPE (TUTORIAL WHICH ALREADY HAS A LOCATION). ONCE NEW BUILDING IS COMPLETE, THE TUTORIAL CAN MOVE IN.

2.2
ONCE BOOKSTORE IS COMPLETED AND RELOCATED TO NEW LOCATION, THE CAFE SCOPE AND ASSOCIATE SITE IMPROVEMENTS CAN BEGIN.

2.3
LEARNING COMMONS UPGRADE CAN FOLLOW OR BE DONE SIMULTANEOUS WITH THE CAFE WORK. THE LLRC SHOULD BE COMPLETED PRIOR TO ALLOW FOR LLRC TO SERVE AS EVENT SPACE DURING LEARNING COMMONS UPGRADE

APPROVALS

NOLL & TAM ARCHITECTS
729 Heinz Avenue
Berkeley, CA 94710
tel 510.542.2200
fax 510.542.2201

ARCHITECTS SEAL

LICENSED ARCHITECT
CHRISTOPHER NOLL
No. C15916
REN. 12-31-21
STATE OF CALIFORNIA

PROJECT TITLE

CONTRA COSTA CCD
D-4002
DVC SAN RAMON CAMPUS EXPANSION & RENOVATION

1690 Watermill Rd.
San Ramon, CA 94582

ISSUE TITLE
INCREMENT 2

ISSUE DATE 5/30/2019
NOLL & TAM JOB NUMBER 21630

REVISIONS
△ | DATE | DESCRIPTION

SHEET TITLE
PHASING PLAN

SHEET NUMBER
G4.11.1

10/11/2021 2:39:11 PM C:\Users\phan.dung\Documents\Revit Locals\DVCSR Expansion_Central 2020_phan.dung@nollandtam.com.rvt

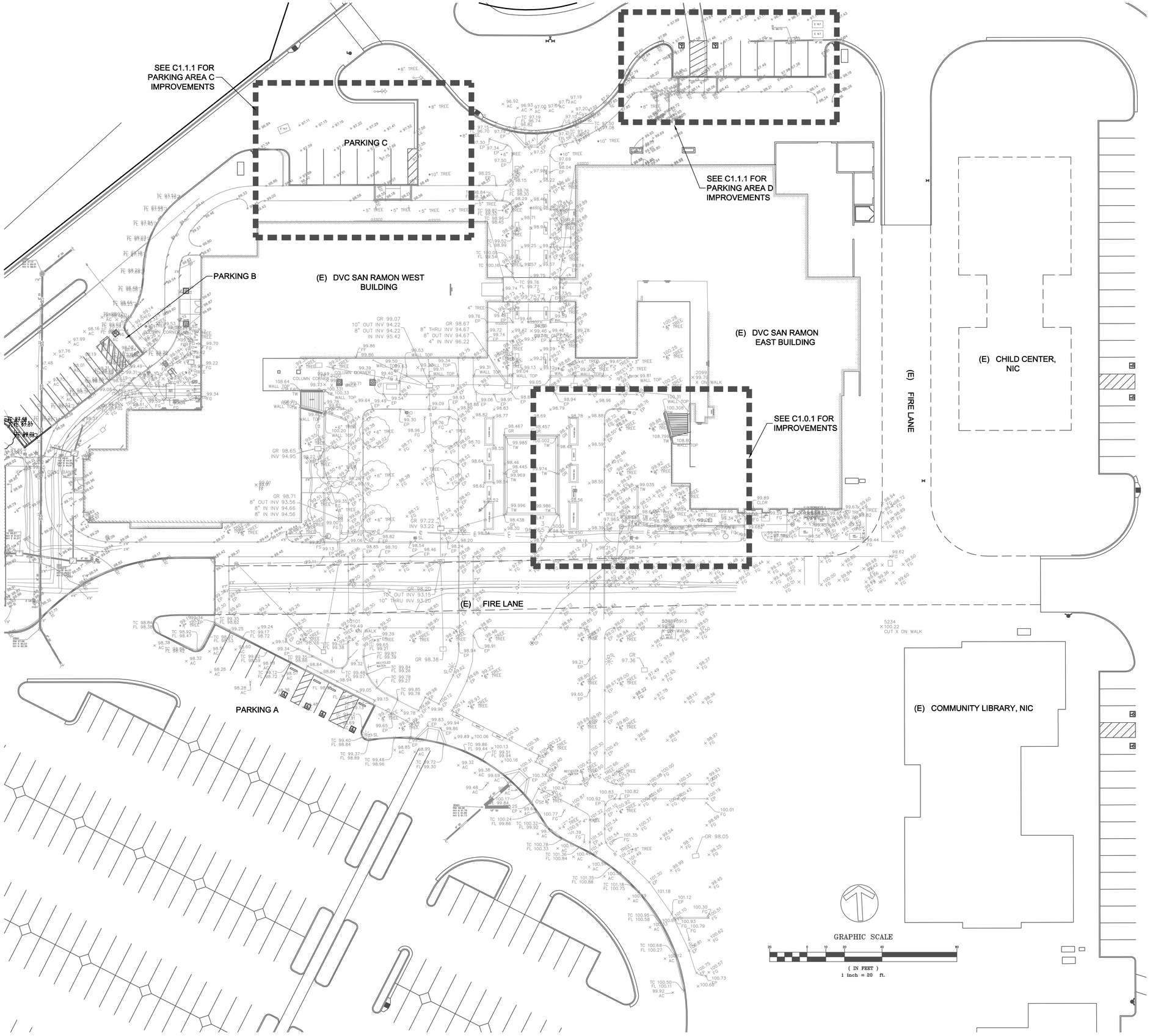

NOLL & TAM ARCHITECTS
729 Heinz Avenue
Berkeley, CA 94710
tel 510.542.2200
fax 510.542.2201

REGISTERED PROFESSIONAL ENGINEER
ERIC S. SWANSON
No. 64607
CIVIL
STATE OF CALIFORNIA
10/12/2021

BkF
ENGINEERS / SURVEYORS / PLANNERS
1646 N. California Blvd, Suite 400
Walnut Creek, CA 94596
(925) 940-2200
(925) 940-2299 (FAX)

APPROVALS
FILE NUMBER: 07-C1

DIVISION OF THE STATE ARCHITECT
APP# 01-117630
ACS_____ FLS_____ SSS_____
Date:

PROJECT TITLE
CONTRA COSTA CCD
D-4002
DVC SAN RAMON CAMPUS EXPANSION

1690 Watermill Rd.
San Ramon, CA 94582

ISSUE TITLE
INCREMENT 1- RENOVATION

ISSUE DATE	09/26/2019
NOLL & TAM JOB NUMBER	21630

REVISIONS

	DATE	DESCRIPTION
1	09/25/19	CCD A-20

SHEET TITLE
EXISTING CONDITIONS

SHEET NUMBER
C1.0.0

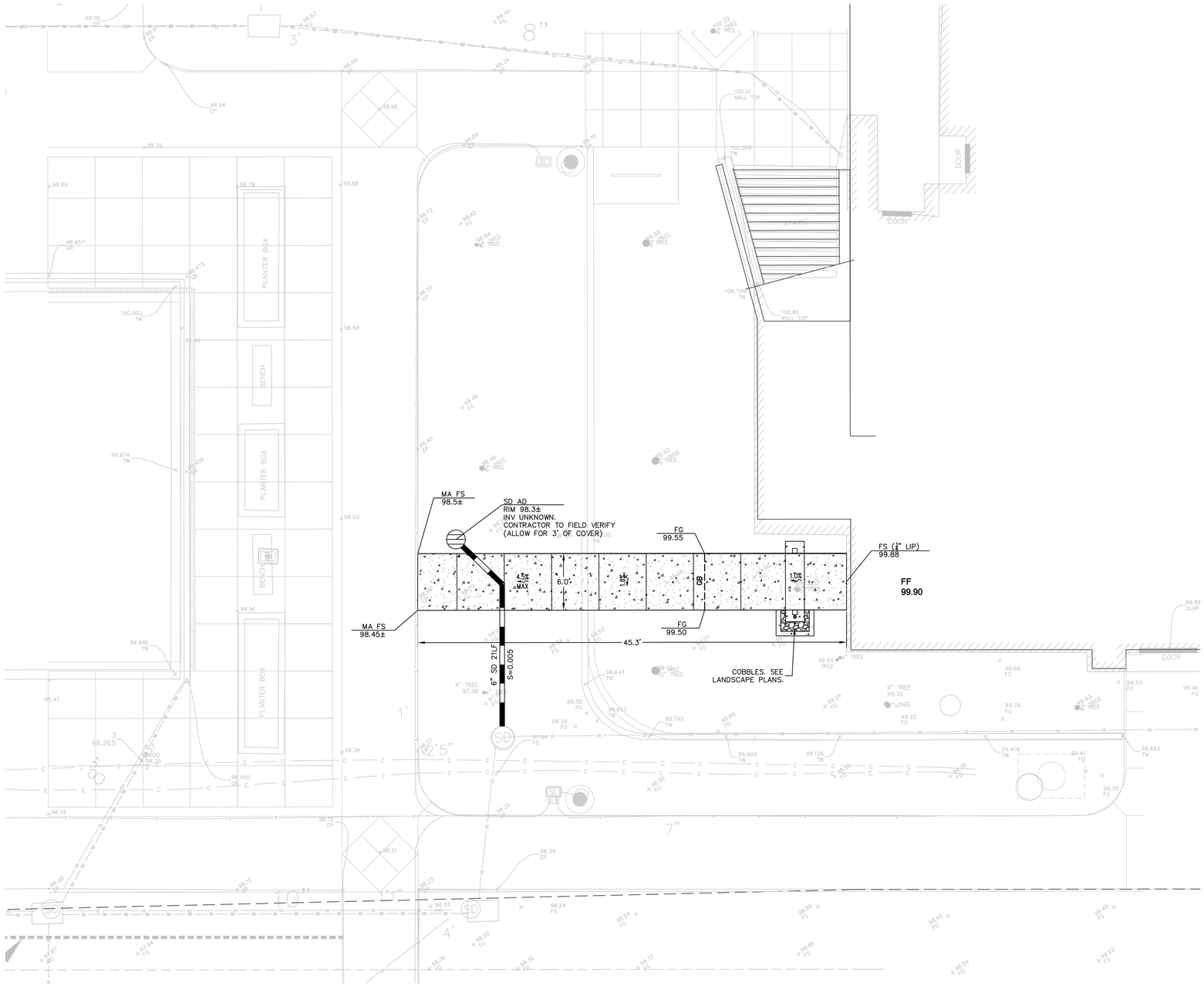

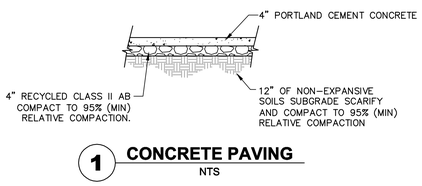

1 CONCRETE PAVING
NTS

HORIZONTAL CONTROL LEGEND:

4" PCC OVER 4" CLASS II AB.
SEE DETAIL 1 THIS SHEET.

HORIZONTAL CONTROL NOTES:

1. ALL DISTANCES AND DIMENSIONS ARE IN FEET AND TO FACE OF CURB UNLESS OTHERWISE NOTED ON PLANS.
2. THE CONTRACTOR IS RESPONSIBLE FOR MATCHING EXISTING STREETS, SURROUNDING LANDSCAPE AND OTHER IMPROVEMENTS WITH A SMOOTH TRANSITION IN PAVING, CURBS AND SIDEWALKS, GRADING, ETC. AND TO AVOID ABRUPT OR APPARENT CHANGES.
3. REFER TO ARCHITECTURAL PLANS FOR BUILDING DETAILS.
4. CONTRACTOR SHALL RESTORE ALL EXISTING WALLS, FENCES, SERVICES, UTILITIES, OR OTHER FEATURES OF WHATEVER NATURE WHICH ARE DAMAGED, DUE TO CONTRACTOR'S WORK, TO THEIR PREVIOUS CONDITION UNLESS OTHERWISE NOTED.

GRADING LEGEND:

~	PROPOSED FLOW DIRECTION
	FLOWLINE
GB	GRADE BREAK
(E)	EXISTING
(N)	NEW
AC	ASPHALT
BOT	BOTTOM
BW	BACK OF WALK
CO	CLEANOUT
DI	DRAIN INLET
FF	FINISHED FLOOR
FG	FINISHED GRADE (EARTH)
FS	FINISHED SURFACE (AC OR PCC)
GB	GRADE BREAK
GR	GRATE
LP	LOW POINT
MA	MATCH
PERF	PERFORATED
SD	STORM DRAIN
SS	SANITARY SEWER
TC	TOP OF CURB
TS	TOP OF SOIL
TW	TOP OF WALL

NOTES:

1. ALL EXISTING UTILITY COVERS WITHIN LIMIT OF WORK ARE TO BE ADJUSTED TO GRADES SHOWN ON PLAN.
2. SEE LANDSCAPE PLANS FOR ALL GRADING IN LANDSCAPE AREAS.
3. FOR WALKS AND IN ADA ACCESSIBLE AREAS CROSS SLOPES SHOULD NOT EXCEED 2% GRADE.
4. IF DURING CONSTRUCTION, ARCHEOLOGICAL OR NATIVE AMERICAN REMAINS OR ARTIFACTS ARE ENCOUNTERED, THE CONTRACTOR SHALL HALT CONSTRUCTION IN THE VICINITY AND SHALL NOTIFY THE CITY OF SAN RAMON BUILDING DEPARTMENT.
5. REFERENCE: "GEOTECHNICAL INVESTIGATION FOR PROPOSED NEW TUTORIAL LIBRARY BUILDING DIABLO VALLEY COLLEGE – SAN RAMON CAMPUS 1690 WATERMILL ROAD SAN RAMON, CA" BY RMA GROUP

NORTH

GRAPHIC SCALE

20 0 10 20 40 80

(IN FEET)
1 inch = 20 ft.

NOLL & TAM ARCHITECTS
729 Heinz Avenue
Berkeley, CA 94710
tel 510.542.2200
fax 510.542.2201

REGISTERED PROFESSIONAL ENGINEER
ERIC S. SWANSON
No. 64607
STATE OF CALIFORNIA
10/12/2021

BkF
ENGINEERS / SURVEYORS / PLANNERS
1646 N. California Blvd, Suite 400
Walnut Creek, CA 94596
(925) 940-2200
(925) 940-2299 (FAX)

APPROVALS
FILE NUMBER: 07-C1

DIVISION OF THE STATE ARCHITECT
APP# 01-117630
ACS_____ FLS_____ SSS_____
Date:

PROJECT TITLE
CONTRA COSTA CCD
D-4002
DVC SAN RAMON CAMPUS EXPANSION
1690 Watermill Rd.
San Ramon, CA 94582

ISSUE TITLE
INCREMENT 1- RENOVATION

ISSUE DATE 09/26/2019
NOLL & TAM JOB NUMBER 21630

REVISIONS

	DATE	DESCRIPTION
1	09/25/19	CCD A-20

SHEET TITLE
GRADING AND LAYOUT PLAN

SHEET NUMBER
C1.0.1

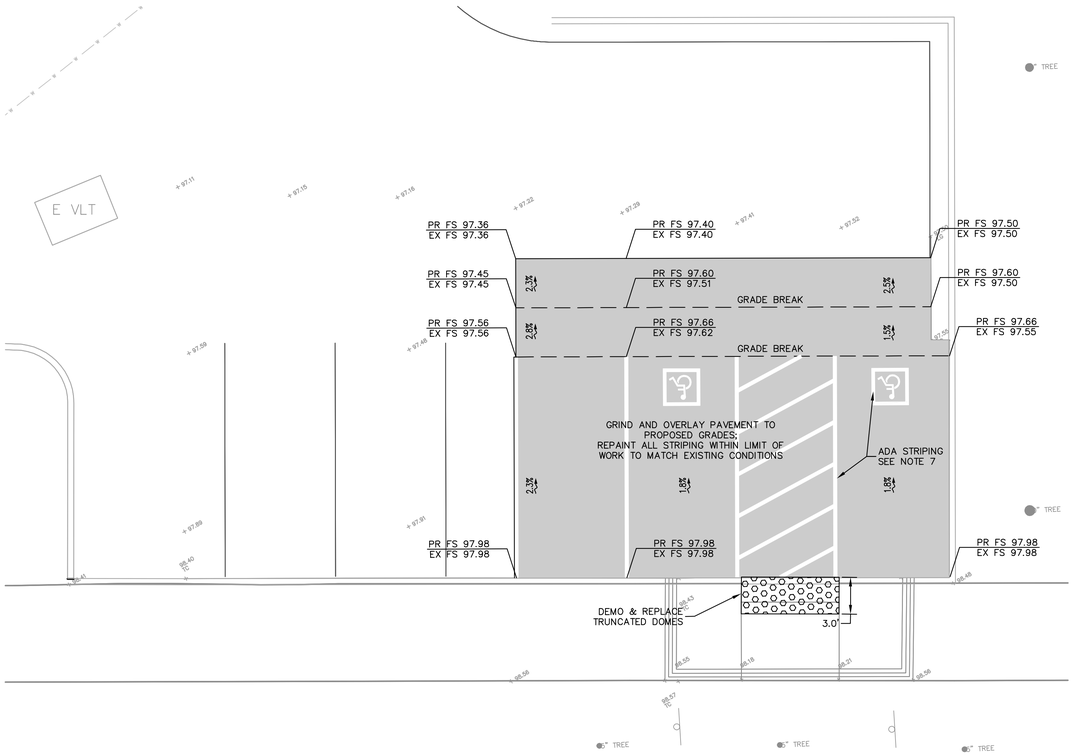

PARKING AREA C

GRAPHIC SCALE
(IN FEET)
1 inch = 5 ft.

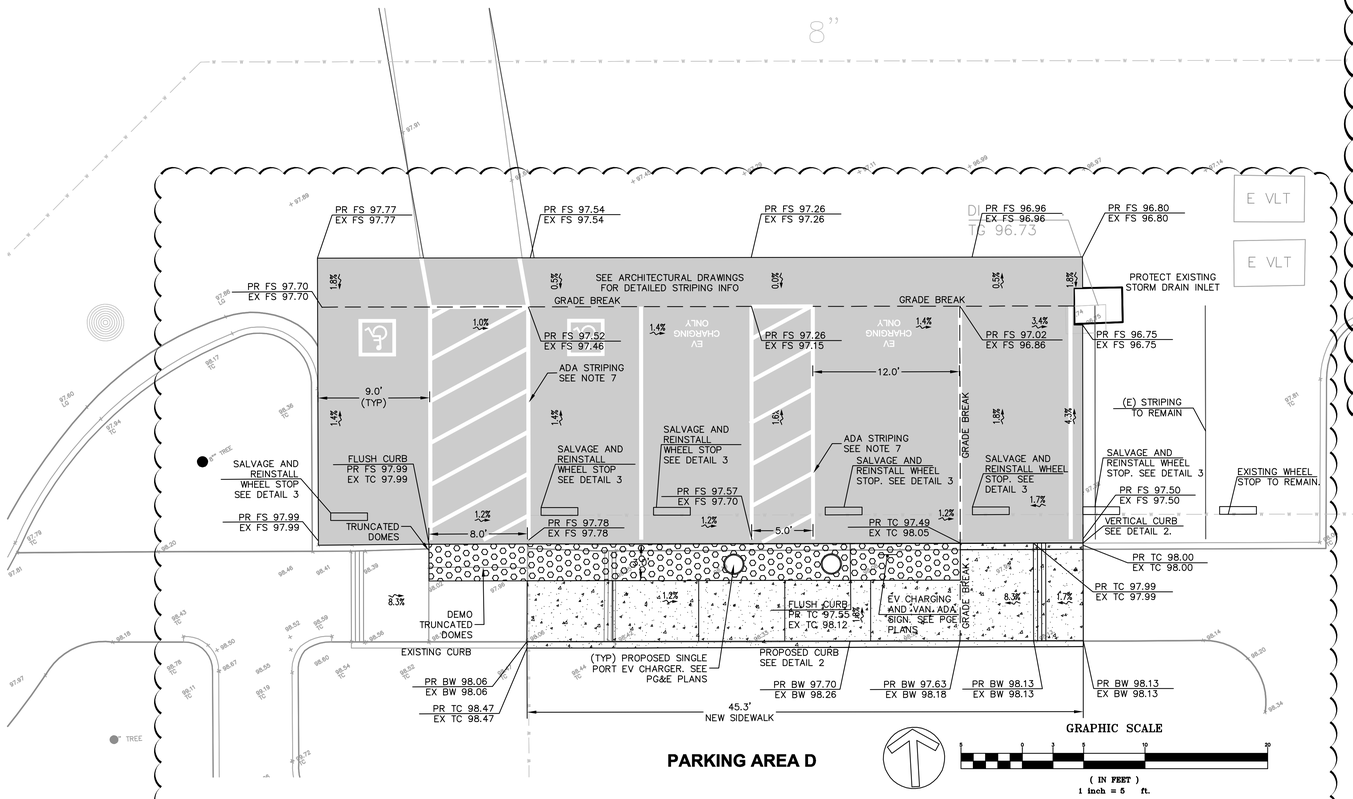

PARKING AREA D

GRAPHIC SCALE
(IN FEET)
1 inch = 5 ft.

LAYOUT LEGEND:

- 4" PCC OVER 4" CLASS II AB. SEE DETAIL 1 THIS SHEET.
- ASPHALT GRIND & OVERLAY
- TRUNCATED DOMES

LAYOUT NOTES:

1. ALL DISTANCES AND DIMENSIONS ARE IN FEET AND TO FACE OF CURB UNLESS OTHERWISE NOTED ON PLANS.
2. THE CONTRACTOR IS RESPONSIBLE FOR MATCHING EXISTING STREETS, SURROUNDING LANDSCAPE AND OTHER IMPROVEMENTS WITH A SMOOTH TRANSITION IN PAVING, CURBS AND SIDEWALKS, GRADING, ETC. AND TO AVOID ABRUPT OR APPARENT CHANGES.
3. REFER TO ARCHITECTURAL PLANS FOR BUILDING DETAILS.
4. CONTRACTOR SHALL RESTORE ALL EXISTING WALLS, FENCES, SERVICES, UTILITIES, OR OTHER FEATURES OF WHATEVER NATURE WHICH ARE DAMAGED, DUE TO CONTRACTOR'S WORK, TO THEIR PREVIOUS CONDITION UNLESS OTHERWISE NOTED.

GRADING LEGEND:

~	PROPOSED FLOW DIRECTION
	FLOWLINE
GB	GRADE BREAK
(PR)	PROPOSED
(EX)	EXISTING
AC	ASPHALT
BOT	BOTTOM
BW	BACK OF WALK
CO	CLEANOUT
DI	DRAIN INLET
FF	FINISHED FLOOR
FG	FINISHED GRADE (EARTH)
FS	FINISHED SURFACE (AC OR PCC)
GB	GRADE BREAK
GR	GRATE
LP	LOW POINT
MA	MATCH
PERF	PERFORATED
SD	STORM DRAIN
SS	SANITARY SEWER
TC	TOP OF CURB
TS	TOP OF SOIL
TW	TOP OF WALL

NOTES:

1. TC ELEVATION SHOWN IS FOR 6" CURB HEIGHT UNLESS OTHERWISE NOTED ON PLAN.
2. ALL EXISTING UTILITY COVERS WITHIN LIMIT OF WORK ARE TO BE ADJUSTED TO GRADES SHOWN ON PLAN.
3. SEE LANDSCAPE PLANS FOR ALL GRADING IN LANDSCAPE AREAS.
4. FOR WALKS AND IN ADA ACCESSIBLE AREAS CROSS SLOPES SHOULD NOT EXCEED 2% GRADE.
5. IF DURING CONSTRUCTION, ARCHEOLOGICAL OR NATIVE AMERICAN REMAINS OR ARTIFACTS ARE ENCOUNTERED, THE CONTRACTOR SHALL HALT CONSTRUCTION IN THE VICINITY AND SHALL NOTIFY THE CITY OF SAN RAMON BUILDING DEPARTMENT.
6. REFERENCE: "GEOTECHNICAL INVESTIGATION FOR PROPOSED NEW TUTORIAL LIBRARY BUILDING DIABLO VALLEY COLLEGE – SAN RAMON CAMPUS 1690 WATERMILL ROAD SAN RAMON, CA" BY RMA GROUP
7. STRIPING FOR ADA STALLS AND AISLE SHALL BE BLUE PAINT. STANDARD PARKING STALLS SHALL BE WHITE PAINT. EV CHARGING STRIPING SHALL BE WHITE PAINT.
8. CONTRACTOR TO FIELD LOCATE CONSTRUCTION JOINTS ALONG NEW CONCRETE SIDEWALK.

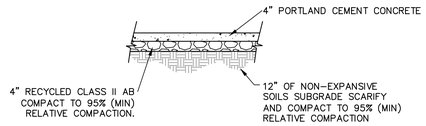

1 CONCRETE PAVING
NTS

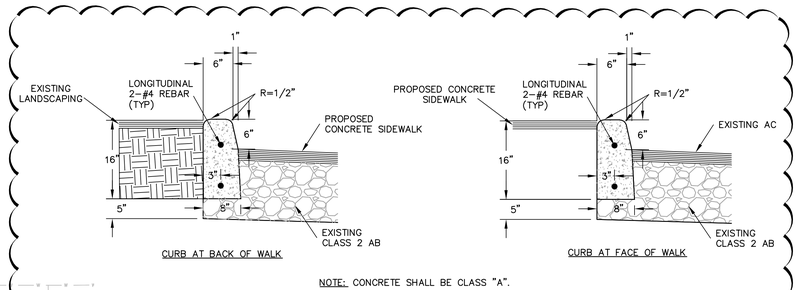

2 VERTICAL CURB
NTS

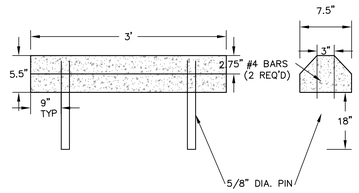

3 WHEEL STOP
NTS

NOLL & TAM ARCHITECTS
729 Heinz Avenue
Berkeley, CA 94710
tel 510.542.2200
fax 510.542.2201

REGISTERED PROFESSIONAL ENGINEER
ERIC S. SWANSON
No. 64607
CIVIL
STATE OF CALIFORNIA
10/12/2021

BkF
ENGINEERS / SURVEYORS / PLANNERS
1646 N. California Blvd, Suite 400
Walnut Creek, CA 94596
(925) 940-2200
(925) 940-2299 (FAX)

APPROVALS
FILE NUMBER: 07-C1
DIVISION OF THE STATE ARCHITECT
APP# 01-117630
ACS_____FLS_____SSS_____
Date:

PROJECT TITLE
CONTRA COSTA CCD
D-4002
DVC SAN RAMON CAMPUS EXPANSION
1690 Watermill Rd.
San Ramon, CA 94582

ISSUE TITLE
INCREMENT 1- RENOVATION

ISSUE DATE 09/26/2019
NOLL & TAM JOB NUMBER 21630

REVISIONS

	DATE	DESCRIPTION
2	09/25/19	CCD A-20

SHEET TITLE
GRADING AND LAYOUT PLAN AT PARKING LOT "C" AND "D"

SHEET NUMBER
C1.1.1

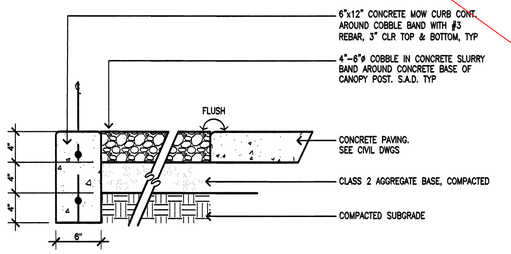

2 COBBLE BAND DETAIL
SECTION — SCALE: 3/2=1'-0"

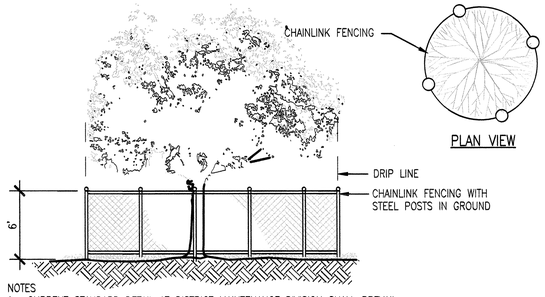

NOTES
1. CURRENT STANDARD DETAIL AT DISTRICT MAINTENANCE DIVISION SHALL PREVAIL.

TREE PRESERVATION NOTES

1. TREE PRESERVATION MEASURES MUST BE IN PLACE BEFORE CONSTRUCTION, DEMOLITION AND/OR GRADING ACTIVITIES COMMENCE. DISTRICT REPRESENTATIVE WILL STOP CONSTRUCTION IF TREE PRESERVATION MEASURES ARE NOT IN PLACE AND MAINTAINED THROUGHOUT THE CONSTRUCTION PERIOD.
2. TREES CALLED OUT FOR PRESERVATION SHALL BE FENCED AT THE DRIPLINE. FENCING MAY OCCUR AT THE COMBINED DRIPLINES OF GROVES OF TREES. PLACE 3" BARK MULCH BENEATH DRIPLINES OF TREES TO BE PRESERVED.
3. FENCING SHALL BE 6–FOOT TALL CHAIN LINK FENCING WITH STEEL POSTS EMBEDDED IN THE GROUND.
4. NO GRADING SHALL OCCUR WITHIN THE DRIPLINES/FENCED AREA OF EXISTING TREES.
5. NO CONSTRUCTION MATERIALS OR CONSTRUCTION VEHICLES MAY BE STORED WITHIN THE DRIPLINES/FENCED AREA OF EXISTING TREES.
6. CONSTRUCTION VEHICLES OR MACHINERY MAY NOT PASS BETWEEN TWO OR MORE EXISTING TREES IDENTIFIED FOR PRESERVATION IF THEIR CANOPIES ARE WITHIN 10 FEET OF TOUCHING. ADDITIONAL FENCING MAY BE REQUIRED BY THE DISTRICT REPRESENTATIVE TO ENFORCE THIS.
7. THE CONTRACTOR IS REQUIRED TO HAVE AN ARBORIST CERTIFIED BY THE INTERNATIONAL SOCIETY OF ARBORICULTURE (ISA) ON SITE IF SITE CONSTRUCTION EFFORTS REQUIRE REMOVAL OF EXISTING ROOTS OR BRANCH PRUNING.
8. UNAUTHORIZED TREE REMOVAL IS SUBJECT TO REPLACEMENT EQUAL TO THE APPRAISED VALUE OF THE TREE LOST.
9. THE CONTRACTOR IS REQUIRED TO WATER, FERTILIZE AND ATTEND TO OTHER MAINTENANCE NEEDS OF EXISTING TREES TO MAINTAIN HEALTHY GROWTH THROUGHOUT THE CONSTRUCTION PERIOD. AN EARTH BERM MEASURING MINIMUM 6 FT IN DIA. AND 6 IN. HEIGHT SHALL BE CONSTRUCTED AT THE BASE OF EACH TREE TO FUNCTION AS A TEMPORARY WATERING BASIN DURING THE CONSTRUCTION PERIOD. TREES SHALL BE WATERED ACCORDING TO WEATHER AND TREE REQUIREMENTS.

1 TREE PROTECTION NOTES AND FENCING DETAIL
SECTION — SCALE: NTS
TREEPROTECT DETAILING

LANDSCAPE SITE DEMO & IMPROVEMENTS LEGEND

- TREE PROTECTION FENCING, SEE DETAIL 1, THIS SHEET
- EXISTING TREE TO BE REMOVED
- EXISTING TREE TO REMAIN
- AREA OF MULCH APPLICATION
- EXISTING SHRUBS TO REMAIN
- EXISTING SHRUBS AND GROUND COVER TO BE REMOVED
- EXISTING WALKWAY TO BE REMOVED
- EXISTING CONCRETE BAND TO BE REMOVED
- COBBLE BAND AT CANOPY BASE SEE DETAIL 2, THIS SHEET
- EJ — EXPANSION JOINT. SEE CIVIL PLANS & SPECIFICATIONS

GENERAL LANDSCAPE CONSTRUCTION NOTES:

1. FOR ADDITIONAL NOTES, SEE ARCHITECTS & CIVIL PLANS
2. CONTRACTOR SHALL VERIFY LOCATION OF ALL UNDERGROUND UTILITIES PRIOR TO CONSTRUCTION. LOCATIONS OF ALL PROPOSED UTILITIES, INCLUDING AREA DRAINS, MANHOLES AND VAULTS AS INDICATED ON CIVIL DRAWINGS.
3. ALL LANDSCAPE RELATED WORK SHALL BE DONE IN ACCORDANCE WITH PROJECT SPECIFICATIONS AND DETAILS.
4. ANY DAMAGE TO EXISTING WALLS, PAVING, OR STRUCTURES TO REMAIN SHALL BE REMOVED & REPLACED BY THE CONTRACTOR AT NO ADDITIONAL COSTS TO THE DISTRICT.
5. THE EXISTING IRRIGATION SYSTEM IS TO REMAIN OPERATIONAL. ANY DAMAGE TO THE SYSTEM SHALL BE REMOVED & REPLACED BY THE CONTRACTOR, AT NO ADDITIONAL COSTS TO THE DISTRICT.
6. 3" DEEP LAYER OF ORGANIC MULCH OR CRUSHED ROCK MULCH OVER DISTURBED NON–PAVED AREAS APPLIED DURING DEMOLITION ACTIVITY IS TO REMAIN.
7. EXISTING LAWN & TREES TO REMAIN
8. EXISTING LAWN TO REMAIN
9. TREE PROTECTION FENCING SHALL BE PROVIDED AND INSTALLED AT NOTED TREES TO REMAIN. ANY DAMAGE TO TREES OR SHRUB MASSINGS SHALL BE REMOVED & REPLACED BY THE CONTRACTOR AT NO ADDITIONAL COSTS TO THE DISTRICT.
10. FOR NEW CONCRETE PAVING SECTION DETAIL, SEE CIVIL PLANS CONTRACTOR SHALL MATCH NEW CONCRETE COLOR & FINISH, TO EXISTING TAN COLOR, SEE LANDSCAPE SPECS
11. FOR COBBLE BAND DETAIL AT CANOPY POST BASE, SEE DETAIL 2, THIS SHEET. TO EXISTING TAN COLOR, SEE LANDSCAPE SPECS
12. ADA PUSH/PAD BOLLARD. SEE ARCHITECT PLANS

GENERAL LANDSCAPE DEMOLITION NOTES:

1. PLACE 3" DEEP LAYER OF ORGANIC MULCH OR CRUSHED ROCK MULCH OVER DISTURBED NON–PAVED AREAS TO THE SOUTH OF THE BOOKSTORE AS NOTED ON DEMOLITION PLAN.
2. TREE PROTECTION FENCING SHALL BE PROVIDED AND INSTALLED AT NOTED TREES TO REMAIN. SEE DETAIL 1, THIS SHEET. ANY DAMAGE TO TREES OR SHRUB MASSINGS SHALL BE REMOVED & REPLACED BY THE CONTRACTOR AT NO ADDITIONAL COSTS TO THE DISTRICT.
3. EXISTING LAWN TO REMAIN
4. EXISTING SHRUBS TO REMAIN. INSTALL 3" LAYER OF MULCH UNDERNEATH SHRUBS PER DEMOLITION NOTE 1
5. EXISTING SHRUBS & GROUND COVER TO BE REMOVED
6. EXISTING LAWN & TREES TO REMAIN
7. EXISTING COMMUNICATIONS VAULT TO REMAIN
8. EXISTING CONCRETE BAND TO BE REMOVED AS NOTED TO EDGE OF NEW CONCRETE PAVING
9. EXISTING LIGHTS TO REMAIN

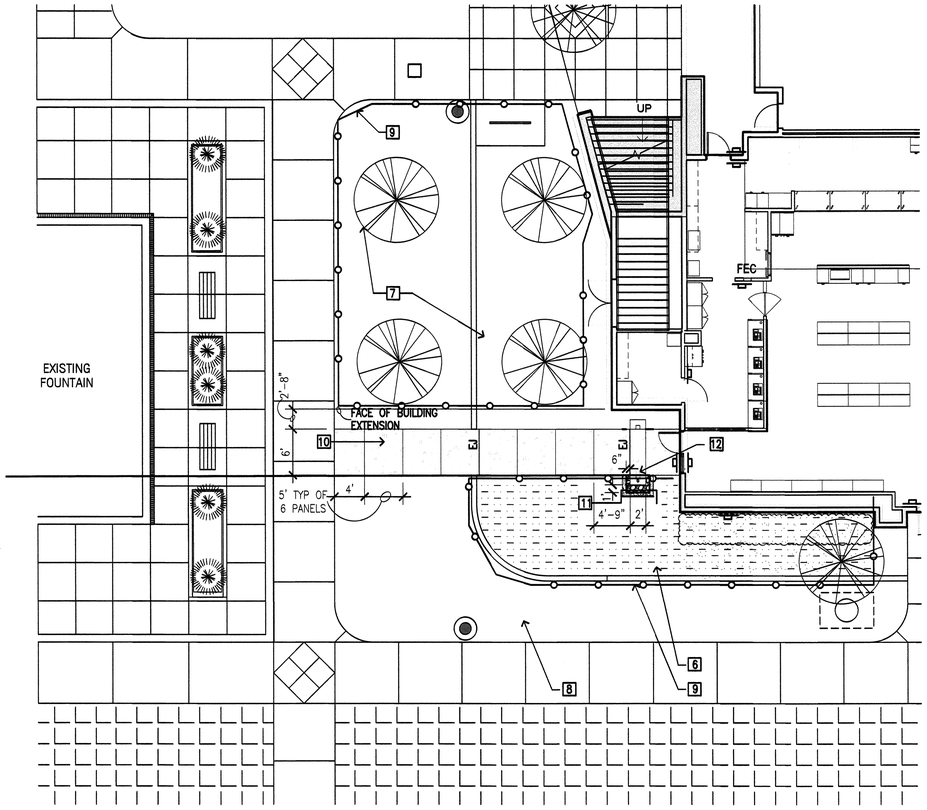

2 ENLARGED LANDSCAPE SITE PLAN @ (N) BOOKSTORE ENTRANCE
L1.00.1 — 1/8" = 1'-0"

BOOKSTORE RELATED SCOPE REMOVED PER CCDA-8

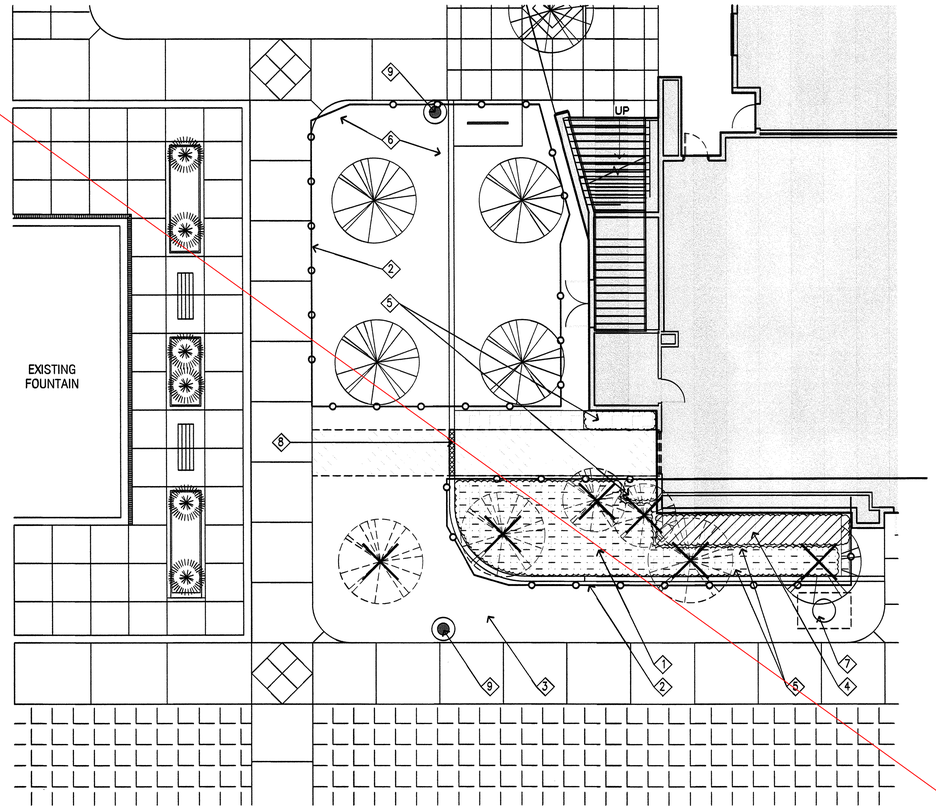

1 ENLARGED LANDSCAPE SITE DEMOLITION PLAN
L1.00.1 — 1/8" = 1'-0"

NOLL & TAM ARCHITECTS
729 Heinz Avenue
Berkeley, CA 94710
tel 510.542.2200
fax 510.542.2201

ARCHITECTS SEAL

REGISTERED LANDSCAPE ARCHITECT — DANIEL L. MORRIS — 2533 — Exp. 4/30/20 — STATE OF CALIFORNIA

APPROVALS
FILE NUMBER: 07-C1
DIVISION OF THE STATE ARCHITECT
APP# 01-117630
ACR: WR BRS: NTS
Date: OCT 25 2018

PROJECT TITLE
CONTRA COSTA CCD
D-4002
DVC SAN RAMON CAMPUS EXPANSION
1690 Watermill Rd.
San Ramon, CA 94582

ISSUE TITLE
INCREMENT 1 - RENOVATION

ISSUE DATE	10/25/2018
NOLL & TAM JOB NUMBER	21630

REVISIONS
	DATE	DESCRIPTION

SHEET TITLE
ENLARGED SITE LANDSCAPE PLANS - DEMOLITION & NEW

SHEET NUMBER
L1.00.1

4/25/2018 8:53:28 PM C:\Users\tbeckle.daniel\Documents\Revit locals\DVCSR Expansion_Central 2018_tbeckle.daniel.rvt

SYMBOLS LEGEND

EXTERIOR WALL TAG
WA0.0 — EXTERIOR WALL TYPE ID

DETAIL MARK
1 / A10.00 — DETAIL DESIGNATION; SHEET NUMBER; DIRECTION OF DETAIL

SECTION MARK
1 / A10.00.0 — DETAIL DESIGNATION; SHEET NUMBER; DIRECTION OF DETAIL

EXTERIOR ELEVATION
1 / A10.00.0 — DIRECTION OF DETAIL; DETAIL DESIGNATION; SHEET NUMBER

INTERIOR ELEVATION
ELEVATION NUMBER; DIRECTION/VIEW SHOWN; SHEET NUMBER

REVISION MARK
AREA CONSIDERED; REVISION NUMBER; REVISION TYPE (XXX ADD)

NORTH ARROW
DIRECTION OF TRUE NORTH; DIRECTION OF SHEET NORTH

WORK POINT (PLAN)

DATUM LEVEL
NAME; ELEVATION

GRID LINES
1, 2; A, B — NEW; EXISTING

KEY NOTE TAG
09-12

ROOM TAG
ROOM NAME; 04-101 — ROOM NAME; ROOM NUMBER

PARTITION TAG
A / 4 / T — PARTITION TYPE ID; INSULATION TYPE; FRAMING SIZE CODE

FRAMING CODE
6: 6"
4: 4"
3: 3 5/8"
2: 2 1/2"
--: Match (E)

INSULATION TYPE: T: THERMAL; A: ACOUSTIC; - : NONE

DOOR TAG
001A — DOOR NUMBER

GLAZING TAG
A — GLAZING TYPE MARK

CASEWORK TAG
DOOR W H D — NUMBER (WOOD INSTITUTE # OR OTHER); MATERIAL / FINISH; DEPTH; HEIGHT; WIDTH

CURB TAG
C1 — TYPE IDENTIFICATION

EQUIPMENT TAG
1

PROPERTY LINE

ABBREVIATIONS

&	AND
(E)	EXISTING
(N)	NEW
@	AT
AB	ANCHOR BOLT
AC	ASPHALTIC CONCRETE
ACC	ACCESS
ACOUS	ACOUSTICAL
ACT	ACOUSTIC CEIILING TILE
AD	AREA DRAIN
ADDL	ADDITIONAL
ADJ	ADJACENT/ADJUSTABLE
AESS	ARCHITECTURAL EXPOSED STRUCTURAL STEEL
AFF	ABOVE FINISHED FLOOR
AGG	AGGREGATE
ALT	ALTERNATE
ALUM	ALUMINUM
ANOD	ANODIZED
APPROX	APPROXIMATE
AV	AUDIO VISUAL
BD	BOARD
BLDG	BUILDING
BLK	BLOCK
BLKG	BLOCKING
BM	BEAM
BO	BOTTOM OF
BOT	BOTTOM
BUR	BUILT UP ROOF
CAB	CABINET
CB	CARRIAGE BOLT
CE	CIVIL ENGINEER
CEM	CEMENT/CEMENTITIOUS
CER	CERAMIC
CFMF	COLD FORMED METAL FRAMING
CI	CAST IRON
CJ	CONTROL JOINT
CLG	CEILING
CLKG	CAULKING
CLO	CLOSET
CLR	CLEAR
CMU	CONCRETE MASONRY UNIT
CNTR	COUNTER
CO	CLEAN OUT
COL	COLUMN
CONC	CONCRETE
CONN	CONNECTION
CONT	CONTINUOUS
CONTR	CONTRACTOR
CORR	CORRIDOR
CPT	CARPET
CSMT	CASEMENT
CTR	CENTER
CTSK	COUNTERSINK
D	DEPTH
DBL	DOUBLE
DEMO	DEMOLITION
DEPT	DEPARTMENT
DF	DOUGLAS FIR/DRINKING FOUNTAIN
DH	DOUBLE HUNG
DIA	DIAMETER
DIM	DIMENSION
DISP	DISPOSAL
DN	DOWN
DR	DOOR
DS	DOWNSPOUT
DTL	DETAIL
DWG	DRAWING
DWR	DRAWER
E	EAST
EA	EACH
EJ	EXPANSION JOINT
ELEC	ELECTRICAL
ELEV	ELEVATION/ELEVATOR
ENLG	ENLARGED
EO	EDGE OF
EOS	EDGE OF SLAB
EP	ELECTRICAL PANEL
EQ	EQUAL
EQUIP	EQUIPMENT
EWC	ELECTRIC WATER COOLER
EXH	EXHAUST
EXP	EXPANSION
EXT	EXTERIOR
FA	FIRE ALARM
FD	FLOOR DRAIN
FDN	FOUNDATION
FE	FIRE EXTINGUISHER
FEC	FIRE EXTINGUISHER CABINET
FF	FACTORY FINISH
FHC	FIRE HOSE CABINET
FIN	FINISH
FIN FLR	FINISH FLOOR
FIXT	FIXTURE
FLR	FLOOR
FLRG	FLOORING
FLUOR	FLUORESCENT
FOC	FACE OF CONCRETE
FOF	FACE OF FINISH
FOS	FACE OF STUD
FR	FIRE RESISTANT/FIRE RETARDANT
FRP	FIBERGLASS REINFORCED PANEL
FRT	FIRE RETARDANT TREATED
FSD	FIRE SEPARATION DISTANCE
FSP	FIBERGLASS SANDWICH PANEL
FT	FOOT/FEET
FTG	FOOTING
FURN	FURNITURE
FX	FIXED
GA	GAUGE
GALV	GALVANIZED
GB	GRAB BAR
GC	GENERAL CONTRACTOR
GFI	GROUND FAULT INTERRUPT
GI	GALVANIZED IRON
GL	GLASS/GLAZING
GLAM	GLUE LAMINATED
GR	GRADE
GSM	GALVANIZED SHEET METAL
GWB	GYPSUM WALL BOARD
GYP	GYPSUM
H	HIGH
HB	HOSE BIB
HC	HOLLOW CORE
HD	HEAD
HDR	HEADER
HDW	HARDWARE
HDWD	HARDWOOD
HM	HOLLOW METAL
HORIZ	HORIZONTAL
HR	HOUR
HT	HEIGHT
HVAC	HEATING VENTILATION & AIR CONDITIONING
ID	INSIDE DIAMETER
IF	INSIDE FACE
INC	INCANDESCENT
INCL	INCLUDE/INCLUDING
INSUL	INSULATION
INT	INTERIOR
JAN	JANITOR
JBOX	JUNCTION BOX
JST	JOIST
JT	JOINT
LAM	LAMINATE
LAV	LAVATORY
LB	LAG BOLT
LF	LINEAR FEET
LKR	LOCKER
LT	LIGHT
MAS	MASONRY
MATL	MATERIAL
MAX	MAXIMUM
MB	MACHINE BOLT
MECH	MECHANICAL
MFR	MANUFACTURER
MH	MANHOLE
MIN	MINIMUM
MISC	MISCELLANEOUS
MTD	MOUNTED
MTL	METAL
MUL	MULLION
N	NORTH
NA	NOT APPLICABLE
NIC	NOT IN CONTRACT
NO	NUMBER
NOM	NOMINAL
NTS	NOT TO SCALE
O/	OVER
OA	OVERALL
OC	ON CENTER
OCC	OCCUPANT
OD	OUTSIDE DIAMETER/OVERFLOW DRAIN
OF	OUTSIDE FACE
OFCI	OWNER FURNISHED CONTRACTOR INSTALLED
OFD	OVERFLOW DRAIN
OFF	OFFICE
OP	OPERABLE
OPNG	OPENING
OPP	OPPOSITE
OPP HD	OPPOSITE HAND
PA	PUBLIC ADDRESS
PARTN	PARTITION
PCP	PORTLAND CEMENT PLASTER
PL	PLATE
PLAM	PLASTIC LAMINATE
PLAS	PLASTIC
PLY	PLYWOOD
PR	PAIR
PROJ	PROJECT/PROJECTOR
PT	POINT/PRESSURE TREATED
PTD	PAINTED
PVC	POLYVINYLCHLORIDE
QTY	QUANTITY
R	RISER
RAD	RADIUS
RD	ROOF DRAIN
REF	REFERENCE
REFR	REFRIGERATOR
REG	REGISTER
REINF	REINFORCE/REINFORCING
REQD	REQUIRED
REQT	REQUIREMENTS
RES	RESILIENT
REV	REVISION
RM	ROOM
RO	ROUGH OPENING
RWL	RAIN WATER LEADER
S	SOUTH
SASF	SELF ADHERING SHEET FLASHING
SASM	SELF ADHERING SHEET MEMBRANE
SC	SOLID CORE
SCD	SEE CIVIL DRAWINGS
SCHED	SCHEDULE
SE	STRUCTURAL ENGINEER
SEC	SECTION
SED	SEE ELECTRICAL DRAWINGS
SF	SUPPLY FAN
SFAD	SEE FIRE ALARM DRAWINGS
SFSD	SEE FIRE SPRINKLER DRAWINGS
SH	SINGLE HUNG
SHT	SHEET
SHTG	SHEATHING
SIM	SIMILAR
SLD	SEE LANDSCAPE DRAWINGS
SMD	SEE MECHANICAL DRAWINGS
SOG	SLAB ON GRADE
SP	SPACE
SPA	SANDWICH PANEL ASSEMBLY
SPD	SEE PLUMBING DRAWINGS
SPEC	SPECIFICATION
SQ	SQUARE
SS	STAINLESS STEEL
SSD	SEE STRUCTURAL DRAWINGS
SSGD	SEE SIGNAGE DRAWINGS
SSK	SERVICE SINK
SSTL	STAINLESS STEEL
STD	STANDARD
STED	SEE TELECOM DRAWINGS
STL	STEEL
STOR	STORAGE
STRL	STRUCTURAL
STRUC	STRUCTURAL
SUSP	SUSPENDED
SYS	SYSTEM
T	TREAD
T&G	TONGUE & GROOVE
TBD	TO BE DETERMINED
TEL	TELEPHONE
TEMP	TEMPERED
THK	THICK/THICKNESS
THRESH	THRESHOLD
TJI	TRUSS JOIST
TO	TOP OF
TOC	TOP OF CONCRETE/CURB
TOP	TOP OF PAVING
TOS	TOP OF STEEL
TOW	TOP OF WALL
TS	TUBE STEEL
TYP	TYPICAL
UON	UNLESS OTHERWISE NOTED
UR	URINAL
VCT	VINYL COMPOSITION TILE
VENT	VENTILATION
VERT	VERTICAL
VEST	VESTIBULE
VIF	VERIFY IN FIELD
W	WEST/WIDTH
W/	WITH
W/O	WITHOUT
WC	WATER CLOSET
WD	WOOD
WH	WATER HEATER
WIN	WINDOW
WO	WHERE OCCURS
WP	WORK POINT
WR	WATER RESISTANT
WRB	WEATHER RESISTANT BARRIER
WT	WEIGHT

APPROVALS

NOLL & TAM ARCHITECTS
729 Heinz Avenue
Berkeley, CA 94710
tel 510.542.2200
fax 510.542.2201

ARCHITECTS SEAL

LICENSED ARCHITECT
CHRISTOPHER NOLL
No. C15916
REN. 12-31-21
STATE OF CALIFORNIA

PROJECT TITLE

CONTRA COSTA CCD
D-4002
DVC SAN RAMON CAMPUS EXPANSION & RENOVATION

1690 Watermill Rd.
San Ramon, CA 94582

ISSUE TITLE
INCREMENT 2

ISSUE DATE 5/30/2019
NOLL & TAM JOB NUMBER 21630

REVISIONS

	DATE	DESCRIPTION
1	1/30/19	BID ADDENDUM 3

SHEET TITLE
ABBREVIATIONS / SYMBOLS

SHEET NUMBER
A0.01.0

10/11/2021 2:34:31 PM C:\Users\phan.dung\Documents\Revit Locals\DVCSR Expansion_Central 2020_phan.dung@nollandtam.com.rvt

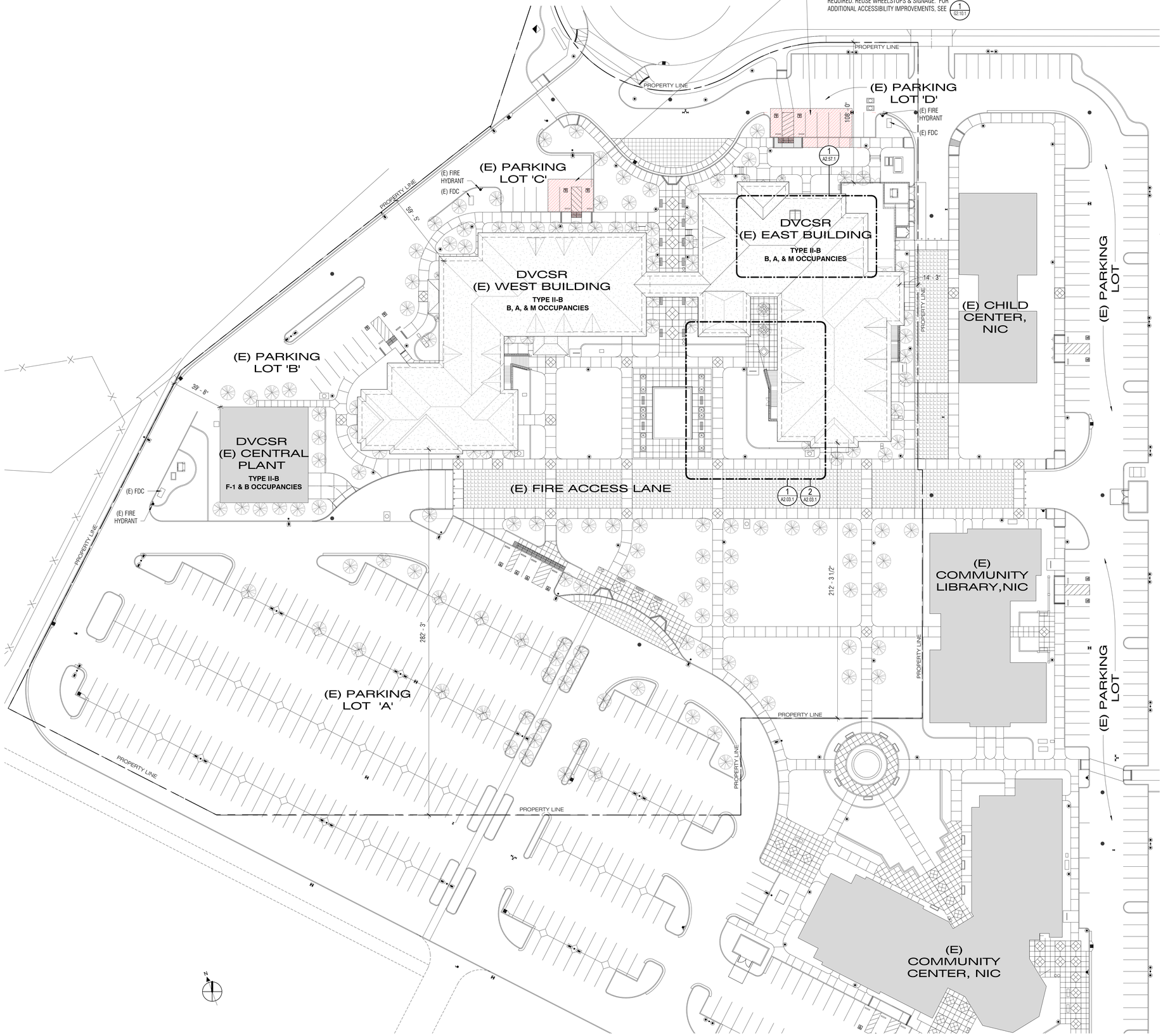

1 A2.01.1 **OVERALL SITE PLAN**
1" = 30'-0"

SHEET NOTES

1. EXISTING SITE IMPROVEMENTS ARE PART DSA APPLICATION #01-106062. EXISTING BUILDINGS ARE UNDER DSA APPLICATION # 01-105719
2. SEE 5 & 9/A2.03.1 FOR MINIMUM HEIGHT CLEARANCES BELOW PARKING SIGNS.
3. SEE 1 & 2/A9.25.1 FOR PARKING SIGNAGE GRAPHIC & SIZE INFORMATION

NOLL & TAM ARCHITECTS
729 Heinz Avenue
Berkeley, CA 94710
tel 510.542.2200
fax 510.542.2201

ARCHITECTS SEAL

LICENSED ARCHITECT
CHRISTOPHER NOLL
No. C15916
REN. 12-31-21
STATE OF CALIFORNIA

APPROVALS
FILE NUMBER: 07-C1
DIVISION OF THE STATE ARCHITECT
APP# 01-117630
ACS_____FLS_____SSS_____
Date:

PROJECT TITLE
CONTRA COSTA CCD
D-4002
DVC SAN RAMON CAMPUS EXPANSION & RENOVATION
1690 Watermill Rd.
San Ramon, CA 94582

ISSUE TITLE
INCREMENT 1 - RENOVATION

ISSUE DATE 4/26/19
NOLL & TAM JOB NUMBER 21630

REVISIONS
| | DATE | DESCRIPTION |

SHEET TITLE
OVERALL SITE PLAN

SHEET NUMBER
A2.01.1

10/11/2021 2:34:53 PM C:\Users\jhan.dung\Documents\Revit Locals\DVCSR Expansion_Central 2020_jhan.dung@nollandtam.com.rvt

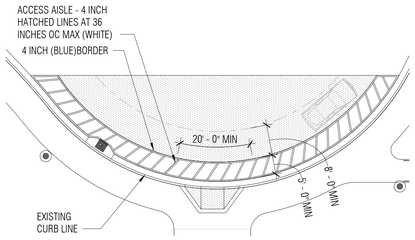

NOTE: ACCESS AISLE MARKING SHALL CONTRAST WITH AISLE SURFACE.

10 A2.03.1 PASSENGER DROP-OFF ENLARGED PLAN

1/16" = 1'-0"

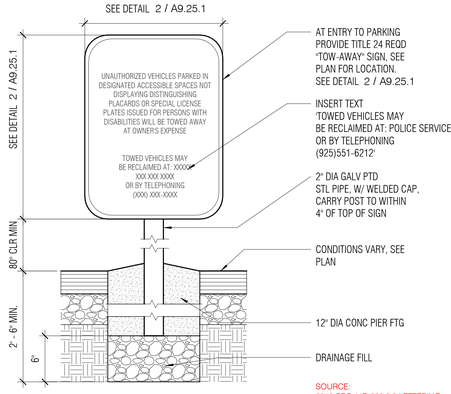

9 A2.03.1 UNAUTHORIZED VEHICLE - TOW-AWAY SIGN AND POST

1 1/2" = 1'-0"

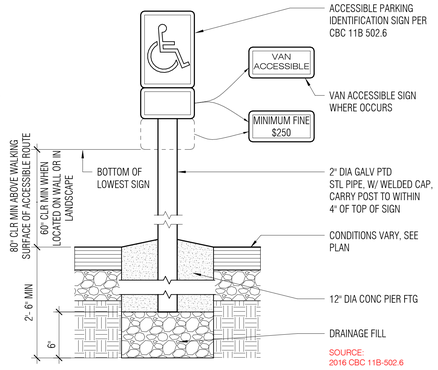

5 A2.03.1 ACCESSIBLE PARKING IDENTIFICATION SIGN AND POST

1 1/2" = 1'-0"

BOOKSTORE RELATED SCOPE REMOVED FROM SCOPE CCDA-8

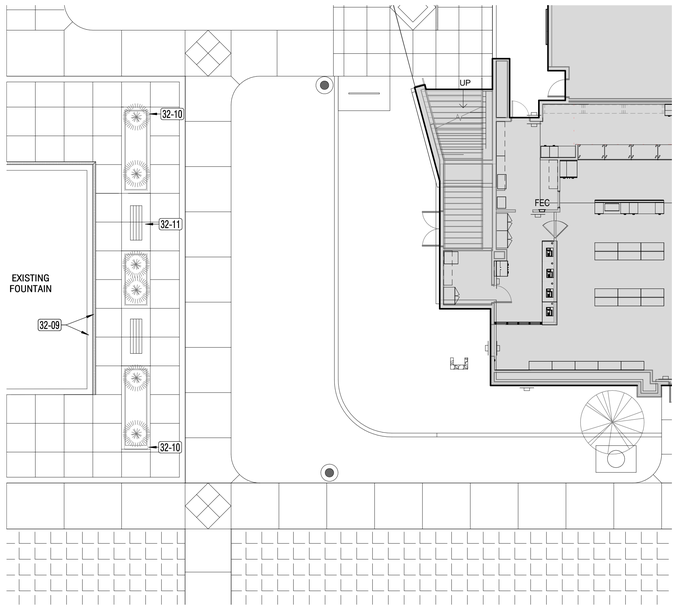

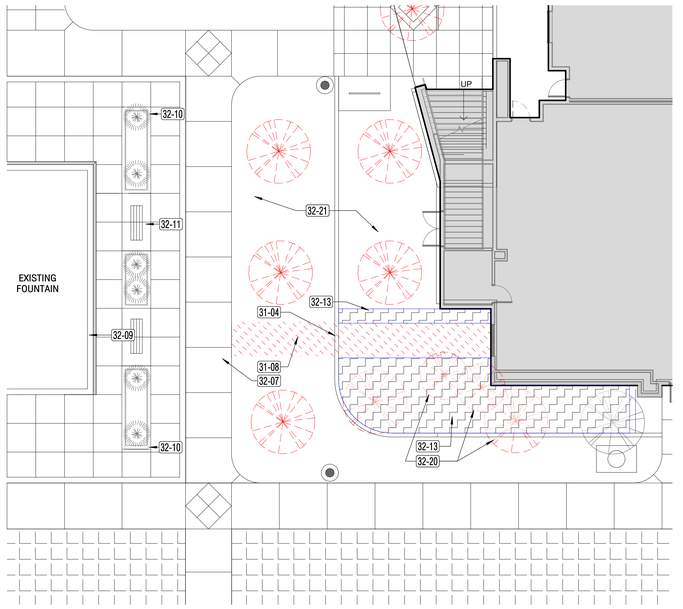

2 A2.03.1 ENLARGED SITE PLAN @ (N) BOOKSTORE ENTRANCE

3/32" = 1'-0"

1 A2.03.1 ENLARGED SITE DEMOLITION PLAN

3/32" = 1'-0"

SHEET NOTES

1. SLD AND SCD FOR ADDITIONAL INFORMATION.

KEY NOTES

Key Value	Keynote Text
31-04	REMOVE EXISTING BORDER, SLD
31-08	REMOVE EXISTING VEGETATION & PREPARE SUBGRADE FOR NEW SIDEWALK
32-07	EXISTING CONCRETE WALK TO REMAIN
32-09	EXISTING WATER FOUNTAIN AND TRENCH DRAIN TO REMAIN
32-10	EXISTING LOW PLANTER TO REMAIN
32-11	EXISTING BENCH, TO REMAIN
32-13	TRIM EXISTING SHRUBBERY AS REQUIRED FOR A VISIBLE BUILDING CORNER, SLD
32-20	REMOVE EXISTING TREE INCLUDING ROOTS. SLD FOR SOIL INFILL OF REMOVED TREE
32-21	EXISTING PLANTING AREA TO REMAIN

SITE DEMO LEGEND

- DEMO (E) SITE OBJECT (SHOWN DASHED), UON
- (E) BUILDING FOOTPRINT
- (E) PLANTING AREA TO BE TRIMMED
- AREA OF DEMOLITION

NOLL & TAM ARCHITECTS
729 Heinz Avenue
Berkeley, CA 94710
tel 510.542.2200
fax 510.542.2201

ARCHITECTS SEAL

LICENSED ARCHITECT
CHRISTOPHER NOLL
No. C15916
REN. 12-31-21
STATE OF CALIFORNIA

APPROVALS

FILE NUMBER: 07-C1

DIVISION OF THE STATE ARCHITECT

APP# 01-117630

ACS_____FLS_____SSS_____
Date:

PROJECT TITLE

CONTRA COSTA CCD
D-4002
DVC SAN RAMON CAMPUS EXPANSION & RENOVATION

1690 Watermill Rd.
San Ramon, CA 94582

ISSUE TITLE

INCREMENT 1 - RENOVATION

ISSUE DATE 4/26/19
NOLL & TAM JOB NUMBER 21630

REVISIONS
| | DATE | DESCRIPTION |

SHEET TITLE

ENLARGED SITE PLANS - DEMOLITION & NEW

SHEET NUMBER

A2.03.1

10/11/2021 2:34:37 PM C:\Users\phan.dung\Documents\Revit Locals\DVCSR Expansion_Central 2020_phan.dung@nollandtam.com.rvt

CCDA-020

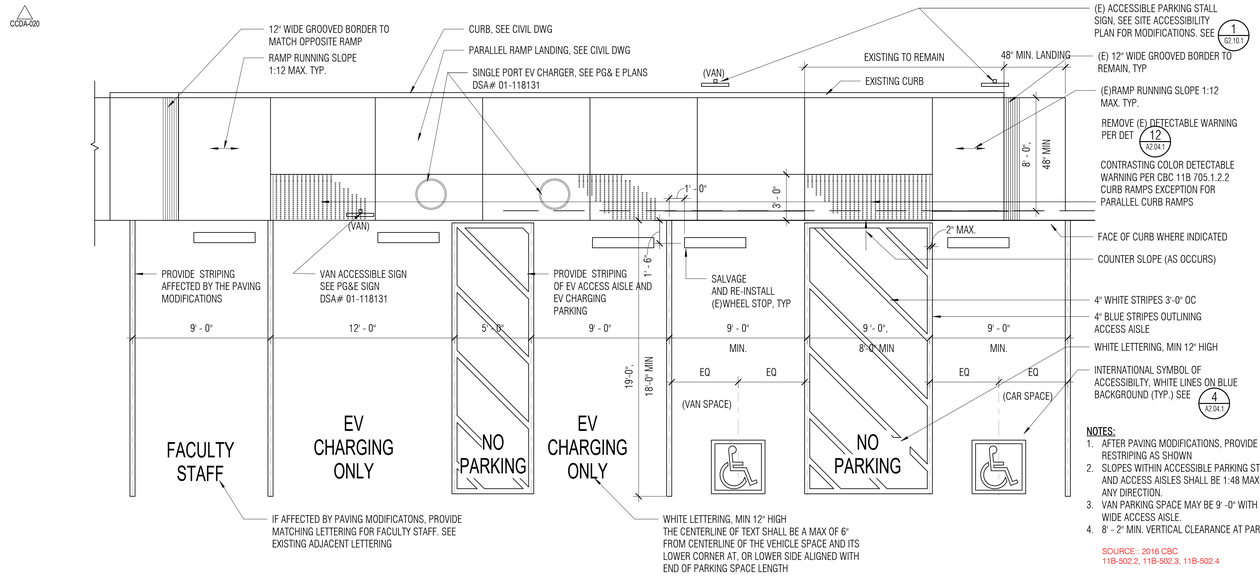

NOTES:
1. REFER TO CIVIL DWG FOR EXTENT OF SIDEWALK MODIFICATIONS. PROTECT (E) PARALLEL CURB RAMP
2. (E)SLOPE LANDINGS TO PREVENT PONDING. MAX. SLOPE IN ANY DIRECTION SHALL BE 1:48.
3. (E)RAMP CROSS SLOPE SHALL BE 1:48 MAX.
4. COUNTER SLOPE @ ADJACENT GUTTERS AND SURFACES, WITHIN 24" MIN. OF CURB FACE, SHALL BE 1:20 MAX .
5. PROVIDE FLUSH TRANSITIONS AT ADJACENT SURFACES

SOURCE: 2016 CBC 11B-406.3.2, CBC 11B 705, 1.2.2 EXCEPTION

NOTES:
1. AFTER PAVING MODIFICATIONS, PROVIDE RESTRIPING AS SHOWN
2. SLOPES WITHIN ACCESSIBLE PARKING STALLS AND ACCESS AISLES SHALL BE 1:48 MAX. IN ANY DIRECTION.
3. VAN PARKING SPACE MAY BE 9' -0" WITH 8' - 0" WIDE ACCESS AISLE.
4. 8' - 2" MIN. VERTICAL CLEARANCE AT PARKING.

SOURCE:: 2016 CBC 11B-502.2, 11B-502.3, 11B-502.4

17 / A2.04.1 ACCESSIBLE PARKING - NORTHEAST - LOT D
1/4" = 1'-0"

NOTES:
1. (E) SLOPE LANDINGS MAX. SLOPE IN ANY DIRECTION SHALL BE 1:48.
2. (E) RAMP CROSS SLOPE SHALL BE 1:48 MAX.
3. COUNTER SLOPE @ ADJACENT GUTTERS AND SURFACES, WITHIN 24" MIN. OF CURB FACE, SHALL BE 1:20 MAX .
4. FLUSH TRANSITIONS AT ADJACENT SURFACES

SOURCE: 2016 CBC 11B-406.3.2, CBC 11B 705, 1.2.2 EXCEPTION

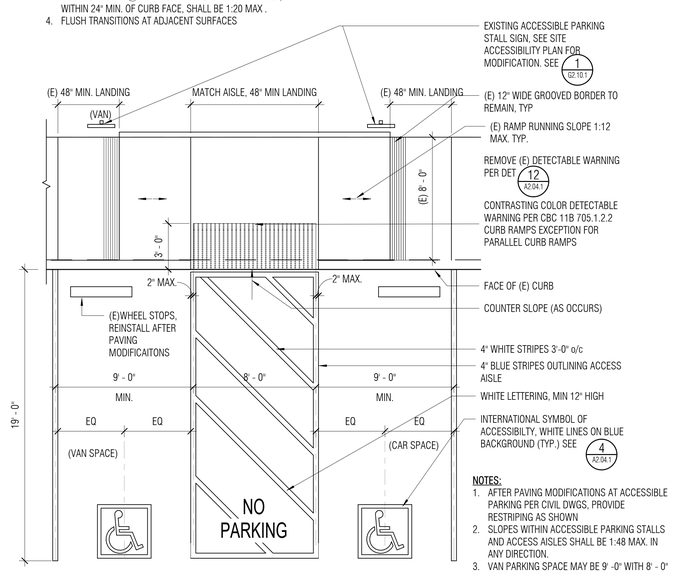

NOTES:
1. AFTER PAVING MODIFICATIONS AT ACCESSIBLE PARKING PER CIVIL DWGS, PROVIDE RESTRIPING AS SHOWN
2. SLOPES WITHIN ACCESSIBLE PARKING STALLS AND ACCESS AISLES SHALL BE 1:48 MAX. IN ANY DIRECTION.
3. VAN PARKING SPACE MAY BE 9' -0" WITH 8' - 0" WIDE ACCESS AISLE.
4. 8' - 2" MIN. VERTICAL CLEARANCE AT PARKING.

SOURCE:: 2016 CBC 11B-502.2, 11B-502.3, 11B-502.4

10 / A2.04.1 ACCESSIBLE PARKING - NORTH - LOT C
1/4" = 1'-0"

NOTES:
1. (E) SLOPE LANDINGS MAX. SLOPE IN ANY DIRECTION SHALL BE 1:48.
2. (E) RAMP CROSS SLOPE SHALL BE 1:48 MAX.
3. COUNTER SLOPE @ ADJACENT GUTTERS AND SURFACES, WITHIN 24" MIN. OF CURB FACE, SHALL BE 1:20 MAX .
4. FLUSH TRANSITIONS AT ADJACENT SURFACES

SOURCE: 2016 CBC 11B-406.3.2, CBC 11B 705, 1.2.2 EXCEPTION

NOTES:
1. PROVIDE RESTRIPING AS SHOWN
2. (E) SLOPES WITHIN ACCESSIBLE PARKING STALLS AND ACCESS AISLES SHALL BE 1:48 MAX. IN ANY DIRECTION.
3. (E) VAN PARKING SPACE MAY BE 9' -0" WITH 8' - 0" WIDE ACCESS AISLE.
4. (E) 8' - 2" MIN. VERTICAL CLEARANCE AT PARKING.

SOURCE:: 2016 CBC 11B-502.2, 11B-502.3, 11B-502.4

11 / A2.04.1 ACCESSIBLE PARKING - SOUTH - LOT A
1/4" = 1'-0"

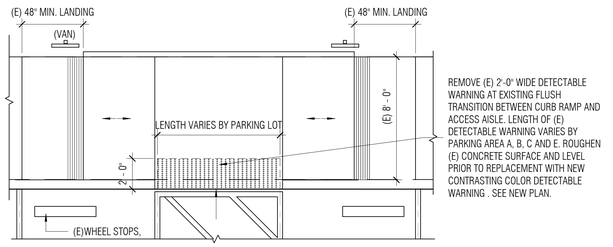

12 / A2.04.1 ACCESSIBLE PARKING - DEMO AT PARALLEL ACCESS CURB
1/4" = 1'-0"

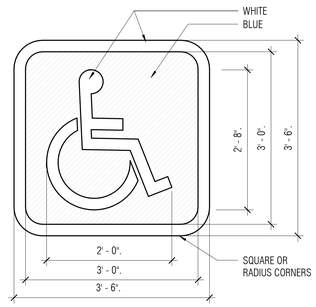

SOURCE: 2013 CBC 703.7.2.1 & 2010 ADA 703.7.2.1

4 / A2.04.1 INTERNATIONAL SYMBOL OF ACCESSIBILITY
3/4" = 1'-0"

NOLL & TAM ARCHITECTS
729 Heinz Avenue
Berkeley, CA 94710
tel 510.542.2200
fax 510.542.2201

ARCHITECTS SEAL

LICENSED ARCHITECT
CHRISTOPHER NOLL
No. C15916
REN. 12-31-21
STATE OF CALIFORNIA

APPROVALS
FILE NUMBER: 07-C1
DIVISION OF THE STATE ARCHITECT
APP# 01-117630
ACS_____FLS_____SSS_____
Date:

PROJECT TITLE
CONTRA COSTA CCD
D-4002
DVC SAN RAMON CAMPUS EXPANSION & RENOVATION
1690 Watermill Rd.
San Ramon, CA 94582

ISSUE TITLE
INCREMENT 1 - RENOVATION

ISSUE DATE 4/26/19
NOLL & TAM JOB NUMBER 21630

REVISIONS

	DATE	DESCRIPTION
1	9/25/19	INC 1

SHEET TITLE
SITE DETAILS

SHEET NUMBER
A2.04.1

10/11/2021 2:34:38 PM C:\Users\phan.dung\Documents\Revit Local\DVCSR Expansion_Central 2020_phan.dung@nollandtam.com.rvt

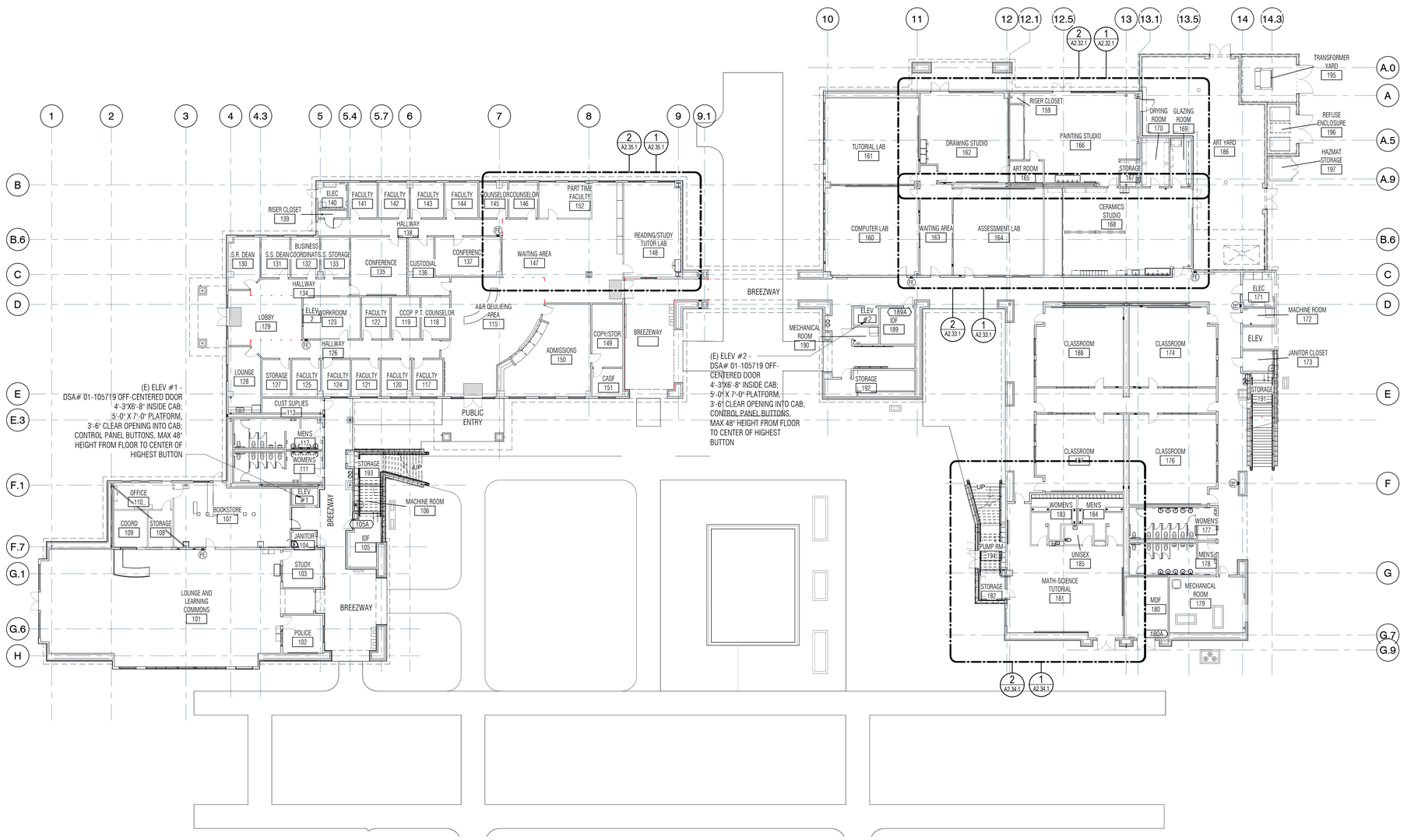

1 A2.30A.1 **01 - FLOOR PLAN (EXISTING)**
1/16" = 1'-0"

10/11/2021 2:34:42 PM C:\Users\phan.dung\Documents\Revit Locals\DVCSR Expansion_Central 2020_phan.dung@nollandtam.com.rvt

NOLL & TAM ARCHITECTS
729 Heinz Avenue
Berkeley, CA 94710
tel 510.542.2200
fax 510.542.2201

ARCHITECTS SEAL

LICENSED ARCHITECT
CHRISTOPHER NOLL
No. C15916
REN. 12-31-21
STATE OF CALIFORNIA

APPROVALS

FILE NUMBER: 07-C1

DIVISION OF THE STATE ARCHITECT
APP# 01-117630
ACS_____FLS_____SSS_____
Date:

PROJECT TITLE

CONTRA COSTA CCD
D-4002
DVC SAN RAMON CAMPUS EXPANSION & RENOVATION

1690 Watermill Rd.
San Ramon, CA 94582

ISSUE TITLE
INCREMENT 1 - RENOVATION

ISSUE DATE 4/26/19
NOLL & TAM JOB NUMBER 21630

REVISIONS
| DATE | DESCRIPTION

SHEET TITLE
OVERALL PLAN - 1ST FLOOR - EXISTING BUILDINGS

SHEET NUMBER
A2.30A.1

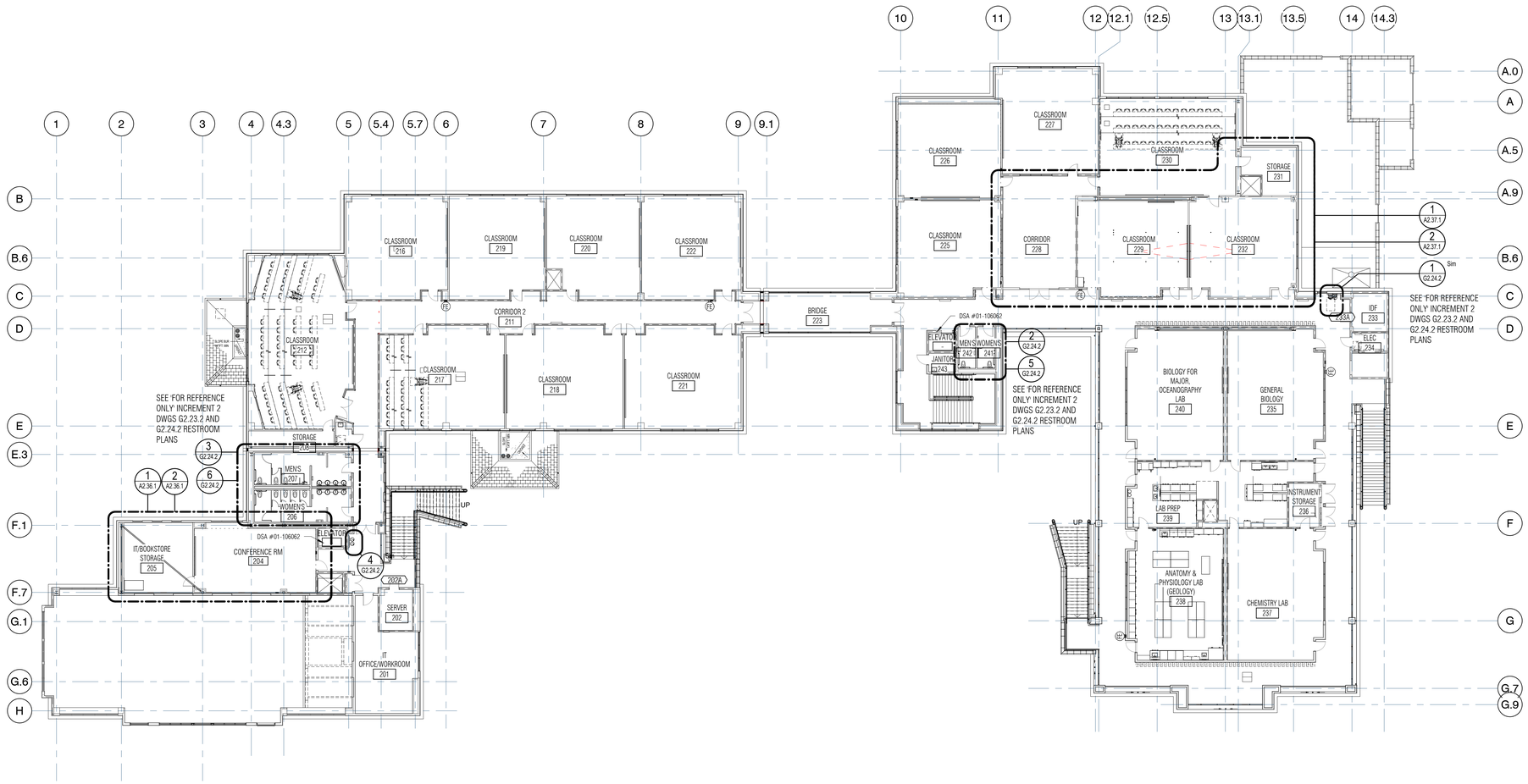

1 A2.308.1 **02 - FLOOR PLAN (EXISTING)**
1/16" = 1'-0"

NOLL & TAM ARCHITECTS

729 Heinz Avenue
Berkeley, CA 94710
tel 510.542.2200
fax 510.542.2201

ARCHITECTS SEAL

LICENSED ARCHITECT
CHRISTOPHER NOLL
No. C15916
REN. 12-31-21
STATE OF CALIFORNIA

APPROVALS

FILE NUMBER: 07-C1

DIVISION OF THE STATE ARCHITECT
APP# 01-117630
ACS_____FLS_____SSS_____
Date:

PROJECT TITLE

CONTRA COSTA CCD
D-4002
DVC SAN RAMON CAMPUS EXPANSION & RENOVATION

1690 Watermill Rd.
San Ramon, CA 94582

ISSUE TITLE
INCREMENT 1 - RENOVATION

ISSUE DATE	4/26/19
NOLL & TAM JOB NUMBER	21630

REVISIONS

	DATE	DESCRIPTION

SHEET TITLE
OVERALL PLAN - 2ND FLOOR - EXISTING BUILDINGS

SHEET NUMBER
A2.30B.1

10/11/2021 2:34:45 PM C:\Users\phan.dung\Documents\Revit Locals\DVCSR Expansion_Central 2020_phan.dung@nollandtam.com.rvt

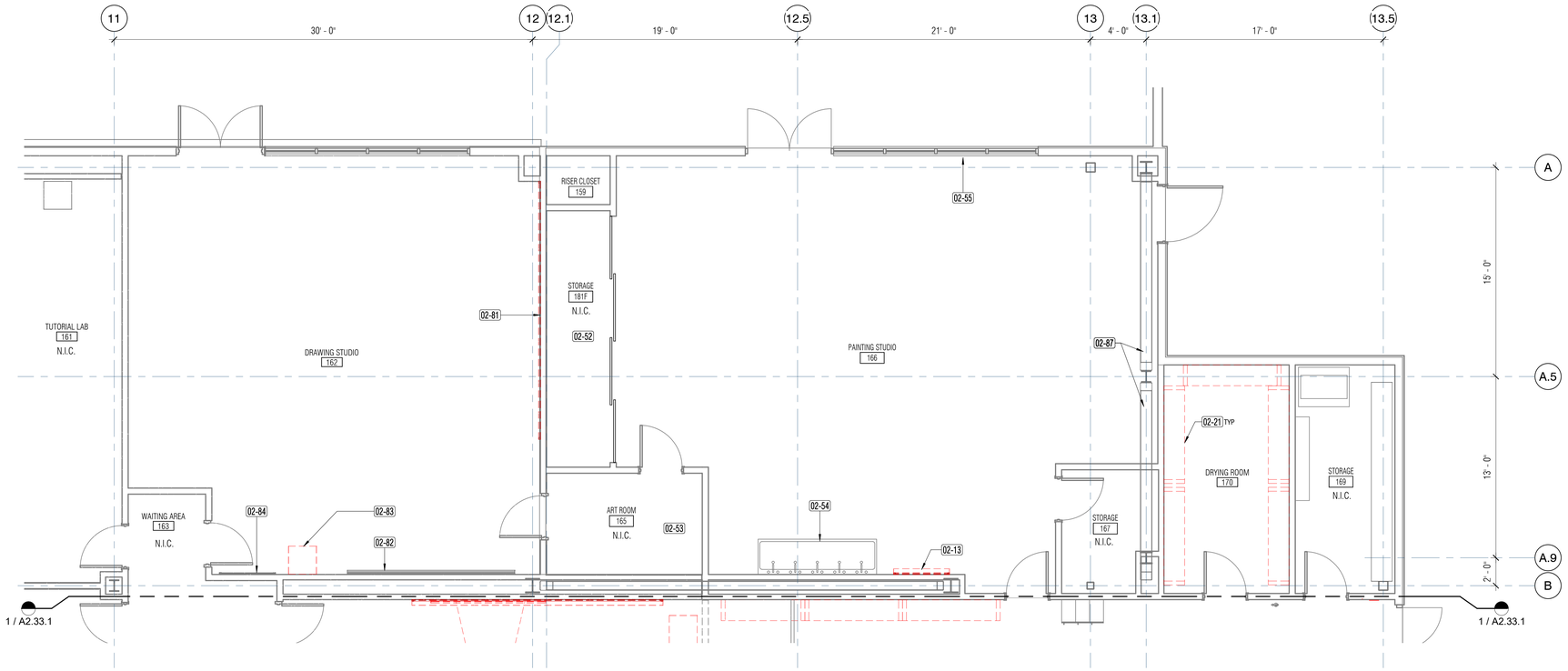

1 A2.32.1 **01 - FLOOR PLAN - EAST - (DEMO) DRAWING - PAINTING STUDIO**

1/4" = 1'-0"

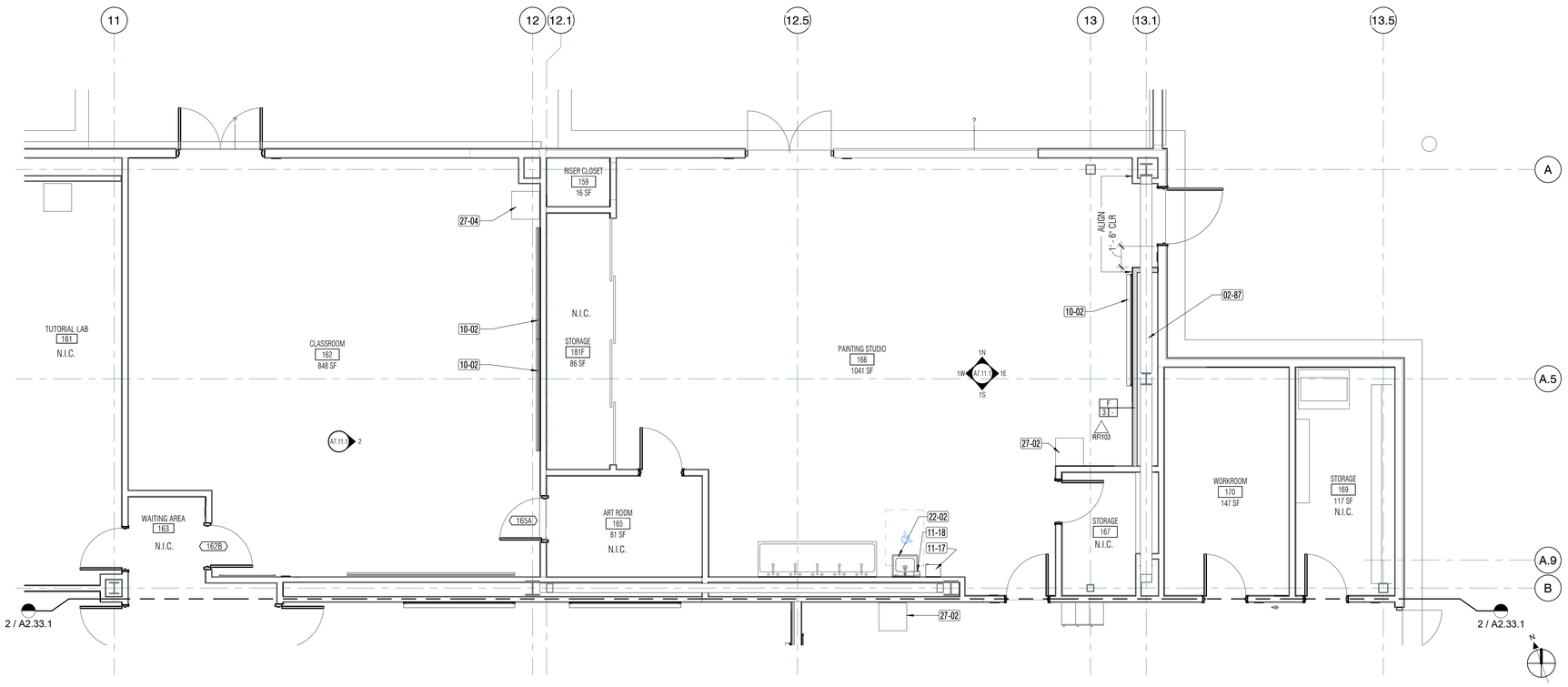

2 A2.32.1 **01 - FLOOR PLAN - EAST - CLASSROOM - PAINTING**

1/4" = 1'-0"

SHEET NOTES

1. SEE REFLECTED CEILING PLANS, SSD, SMP, SED, SPD, SFAD, SFSD, STED FOR MORE DEMOLITION INFORMATION.
2. (E) GYPSUM BOARD OR OTHER INTERIOR FINISHES ON WALLS NOT BEING DEMOLISHED SHALL REMAIN IN PLACE UON. SEE SHEET NOTE #5. PATCH, REPAIR & PAINT EXISTING FINISHES AS AFFECTED BY SCOPE OF WORK,TO MATCH (E) ADJACENT SURFACES AS REQUIRED.
3. DIMENSIONS PROVIDED ON THE DRAWING ARE FOR REFERENCE ONLY. CONTRACTOR SHALL PROVIDE FIELD VERIFICATION AS REQUIRED IN AREA OF WORK
4. REFER TO FURNITURE PLAN FOR NON-FIXED FURNISHINGS AND EQUIPMENT
5. GENERAL CONTRACTOR TO COORDINATE BACKING AT ALL REQUIRED LOCATIONS IN NEW AND EXISTING WALLS, INCLUDING SELECTIVE DEMOLITION AND REPAIR OF EXISTING FINISHES TO PROVIDE BACKING IN EXISTING WALLS. BACKING IS REQUIRED FOR MOUNTING OF WALL MOUNTED EQUIPMENT INCLUDING, BUT NOT LIMITED TO, ACCESSORIES, FIXTURES, FIXED CASEWORK..ETC. SEE 6 & 7/S9.02.1 FOR BACKING DETAILS. FOR WALL-MOUNTED FURNITURE ITEMS SEE FURNITURE PLAN. AT EXISTING WALLS TO RECEIVE WALL MOUNTED UPPER CABINETS OR ITEMS EXCEEDING 50 LBS, WHERE EXISTING STUDS ARE LIGHTER THAN 16 GA, GYPSUM BOARD WILL NEED TO BE REMOVED TO INSTALL MIN 16 GA STUDS SISTERED TO EXISTING STUDS PER 7/S9.02.1. PATCH & REPAIR WALL TO MATCH EXISTING ASSEMBLIES AND FINISHES, UON.
6. WHERE NEW ROOM ID SIGNAGE IS PROVIDED, REMOVE EXISTING ROOM SIGNAGE THAT IS NO LONGER APPLICABLE. SEE A9.21.2 AND A9.22.1 FOR SIGNAGE
7. REFER TO SHEET A9.24.1 & A9.25.1 FOR NEW SIGNAGE DETAILS.
8. PROVIDE WINDOW SHADES AT EXTERIOR OR INTERIOR WINDOWS, SEE A8.50.1 FOR WINDOW SHADE INFORMATION. SEE DOOR COMMENTS FOR SHADES AT DOOR LITES
9. IN SCOPE AREA, AN ASSISTIVE LISTENING SYSTEM SHALL BE PROVIDED IN ASSEMBLY AREAS, INCLUDING CLASSROOMS. THE NUMBER OF RECEIVES SHALL BE EQUAL TO 4% OF TOTAL # OF SEATS, BUT NO LESS THAN TWO. 25% MIN OF RECEIVERS PROVIDED BUT NOT FEWER THAN TWO SHALL BE HEARING-AID COMPATIBLE. PORTABLE ASSISTIVE LISTENING SYTEM ARE USED TO SERVE MORE THAN ONE ROOM. ALS NOT IN CONTRACT BUT SHALL BE PROVIDED BY OWNER

KEY NOTES

Key Value	Keynote Text
02-13	REMOVE AND SALVAGE EXISTING MARKERBOARD FOR RE-INSTALLATION @ NEW LOCATION OR STORAGE. COORDINATE WITH OWNER.
02-21	REMOVE AND SALVAGE EXISTING HEAVY DUTY SHELVING RACK . COORDINATE RE-USE OR STORAGE OF SHELVES WITH OWNER.
02-52	EXISTING DRAWING STORAGE DRAWERS AND CABINETS. PROTECT IN PLACE.
02-53	EXISTING DRAWING EQUIPMENT. PROTECT IN PLACE
02-54	EXISTING SINK TROUGH AND FAUCET TO REMAIN. PROTECT IN PLACE
02-55	EXISTING CURTAINS AND SHADES TO REMAIN. PROTECT IN PLACE
02-81	REMOVE & SALVAGE (E) TACK BOARD(S). COORDINATE WITH OWNER.
02-82	EXISTING MARKERBOARD TO REMAIN
02-83	REMOVE AND SALVAGE EXISTING DISTRICT STANDARD AV BLACKBOX FOR RE-INSTALLATION IN SAME ROOM. SEE NEW FLOOR PLAN FOR NEW LOCATION. COORDINATE WITH OWNER.
02-84	EXISTING BULLETIN BOARD TO REMAIN
02-87	EXISTING STRUCTURAL STEEL BRACE FRAME
10-02	NEW MARKERBOARD
11-17	OFCI - PAPER TOWEL DISPENSER, KIMBERLY-CLARK MOD.34346, PROVIDE BACKING @ GYP. BD & METAL STUD WALLS
11-18	OFCI - SOAP DISPENSER, GOJO SOAP DISPENSER # IS. 0884-06-BCE14YL, PROVIDE BACKING @ GYP. BD & METAL STUD WALLS
22-02	NEW ACCESSIBLE STAINLESS STEEL SINK, SPD, SEE DET 17/A8.73.1
27-02	RELOCATED DISTRICT STANDARD AV BLACKBOX FROM CLASSROOM 232, CLASSROOM 229
27-04	(E) RELOCATED DISTRICT STANDARD AV BLACK BOX FROM SAME ROOM

FLOOR DEMO LEGEND

(SYMBOLS SHOWN - NOT ALL WILL BE USED ON PLAN)

- REMOVE (E) WALL OR ASSEMBLY, INCLUDING WINDOWS (SHOWN DASHED)
- REMOVE (E) DOOR AND FRAME, UON
- EXISTING WALLS AND COLUMNS

LEGEND

(SYMBOLS SHOWN - NOT ALL WILL BE USED ON PLAN)

- FRAMED PARTITION WALL, EXTEND TO FLOOR/ROOF STRUCTURE ABOVE, NON-RATED U.O.N. (SEE A0.01.0 FOR MORE INFORMATION)
- DOOR TYPE
- WINDOW / STOREFRONT TYPE
- EXISTING WALL, PARTITION, COLUMNS, & MISCELLANEOUS OBJECTS
- EXISTING 1-HR-RATED ASSEMBLY
- EXISTING 2-HR FIRE SEPARATION WALL
- NEW 1-HR RATED ASSEMBLY

NOLL & TAM ARCHITECTS

729 Heinz Avenue
Berkeley, CA 94710
tel 510.542.2200
fax 510.542.2201

ARCHITECTS SEAL

LICENSED ARCHITECT
CHRISTOPHER NOLL
No. C15916
REN. 12-31-21
STATE OF CALIFORNIA

APPROVALS

FILE NUMBER: 07-C1

DIVISION OF THE STATE ARCHITECT

APP# 01-117630

ACS_____FLS_____SSS_____

Date:

PROJECT TITLE

CONTRA COSTA CCD
D-4002
DVC SAN RAMON CAMPUS EXPANSION & RENOVATION

1690 Watermill Rd.
San Ramon, CA 94582

ISSUE TITLE

INCREMENT 1 - RENOVATION

ISSUE DATE	4/26/19
NOLL & TAM JOB NUMBER	21630

REVISIONS

	DATE	DESCRIPTION
1	6/5/19	INC 1 RFI103

SHEET TITLE

DEMO & NEW - 1ST FLOOR - EAST - CLASSROOM - PAINTING STUDIO

SHEET NUMBER

A2.32.1

10/11/2021 2:34:50 PM C:\Users\phan.dung\Documents\Revit Locals\DVCSR Expansion_Central 2020_phan.dung@nollandtam.com.rvt

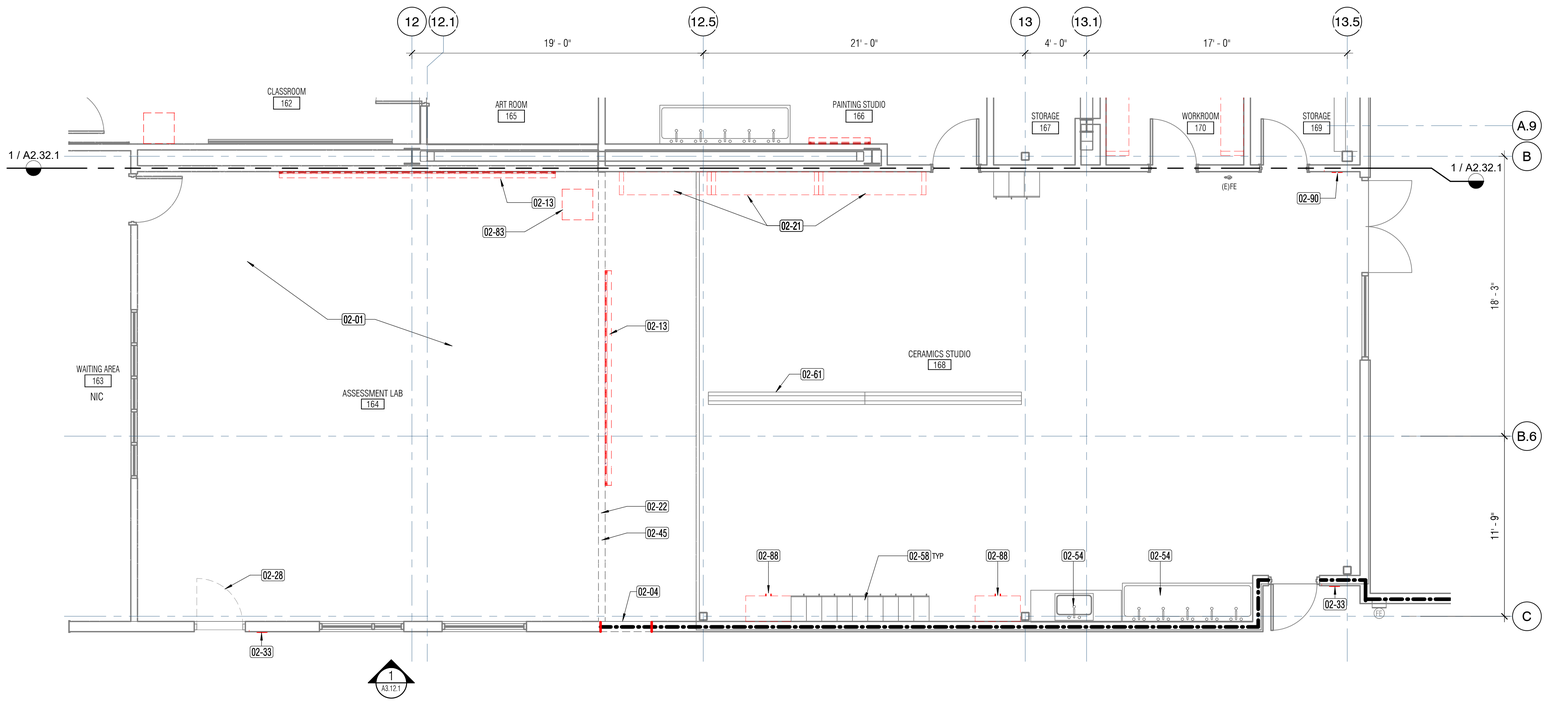

1 A2.33.1 **01 - FLOOR PLAN - EAST - (DEMO) LAB - CERAMIC STUDIO**
1/4" = 1'-0"

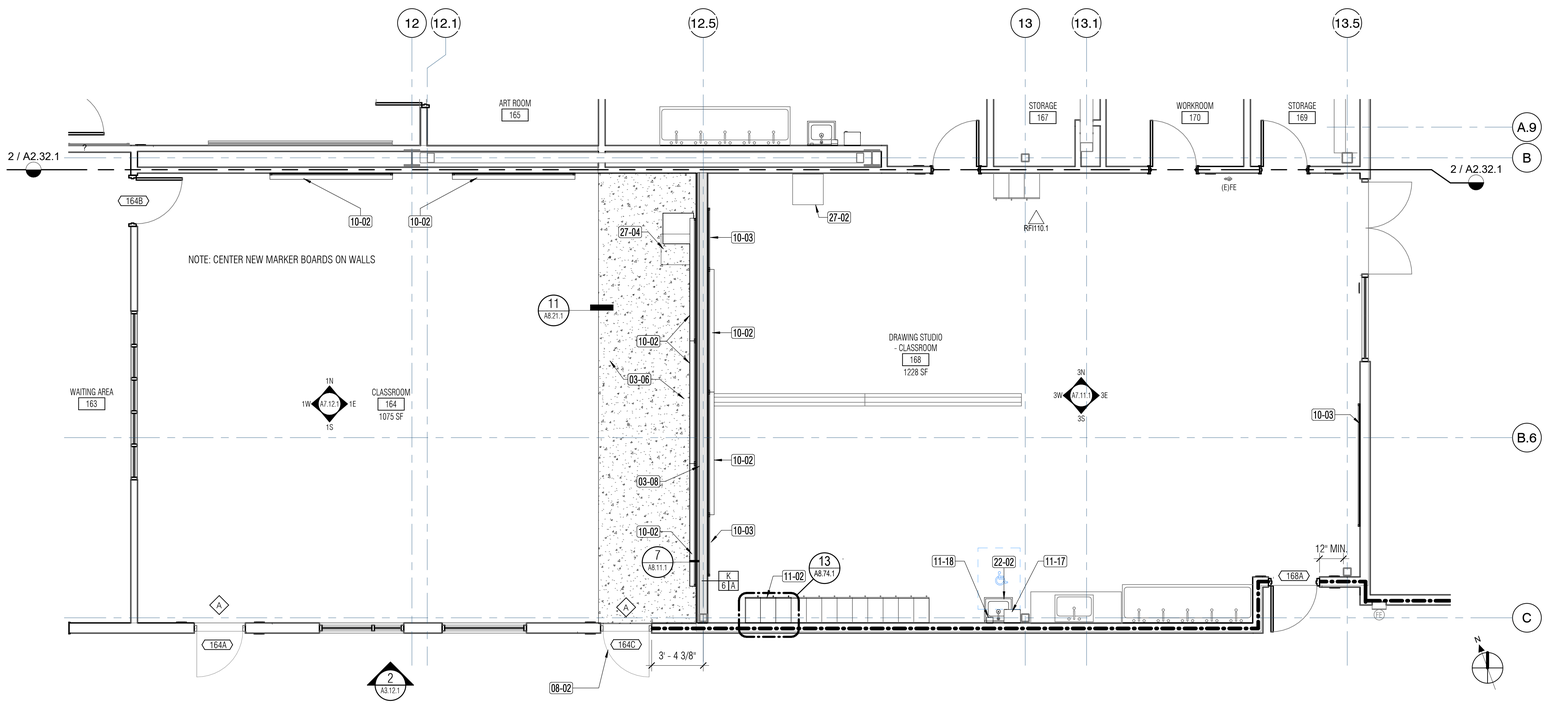

2 A2.33.1 **01 - FLOOR PLAN - EAST - CLASSROOM - DRAWING STUDIO**
1/4" = 1'-0"

SHEET NOTES

1. SEE REFLECTED CEILING PLANS, SSD, SMP, SED, SPD, SFAD, SFSD, STED FOR MORE DEMOLITION INFORMATION.
2. (E) GYPSUM BOARD OR OTHER INTERIOR FINISHES ON WALLS NOT BEING DEMOLISHED SHALL REMAIN IN PLACE UON. SEE SHEET NOTE #5. PATCH, REPAIR & PAINT EXISTING FINISHES AS AFFECTED BY SCOPE OF WORK,TO MATCH (E) ADJACENT SURFACES AS REQUIRED.
3. DIMENSIONS PROVIDED ON THE DRAWING ARE FOR REFERENCE ONLY. CONTRACTOR SHALL PROVIDE FIELD VERIFICATION AS REQUIRED IN AREA OF WORK
4. REFER TO FURNITURE PLAN FOR NON-FIXED FURNISHINGS AND EQUIPMENT
5. GENERAL CONTRACTOR TO COORDINATE BACKING AT ALL REQUIRED LOCATIONS IN NEW AND EXISTING WALLS, INCLUDING SELECTIVE DEMOLITION AND REPAIR OF EXISTING FINISHES TO PROVIDE BACKING IN EXISTING WALLS. BACKING IS REQUIRED FOR MOUNTING OF WALL MOUNTED EQUIPMENT INCLUDING, BUT NOT LIMITED TO, ACCESSORIES, FIXTURES, FIXED CASEWORK..ETC. SEE 6 & 7/S9.02.1 FOR BACKING DETAILS. FOR WALL-MOUNTED FURNITURE ITEMS SEE FURNITURE PLAN. AT EXISTING WALLS TO RECEIVE WALL MOUNTED UPPER CABINETS OR ITEMS EXCEEDING 50 LBS, WHERE EXISTING STUDS ARE LIGHTER THAN 16 GA, GYPSUM BOARD WILL NEED TO BE REMOVED TO INSTALL MIN 16 GA STUDS SISTERED TO EXISTING STUDS PER 7/S9.02.1. PATCH & REPAIR WALL TO MATCH EXISTING ASSEMBLIES AND FINISHES, UON.
6. WHERE NEW ROOM ID SIGNAGE IS PROVIDED, REMOVE EXISTING ROOM SIGNAGE THAT IS NO LONGER APPLICABLE. SEE A9.21.2 AND A9.22.1 FOR SIGNAGE
7. REFER TO SHEET A9.24.1 & A9.25.1 FOR NEW SIGNAGE DETAILS.
8. PROVIDE WINDOW SHADES AT EXTERIOR OR INTERIOR WINDOWS, SEE A8.50.1 FOR WINDOW SHADE INFORMATION. SEE DOOR COMMENTS FOR SHADES AT DOOR LITES
9. IN SCOPE AREA, AN ASSISTIVE LISTENING SYSTEM SHALL BE PROVIDED IN ASSEMBLY AREAS, INCLUDING CLASSROOMS. THE NUMBER OF RECEIVES SHALL BE EQUAL TO 4% OF TOTAL # OF SEATS, BUT NO LESS THAN TWO. 25% MIN OF RECEIVERS PROVIDED BUT NOT FEWER THAN TWO SHALL BE HEARING-AID COMPATIBLE. PORTABLE ASSISTIVE LISTENING SYTEM ARE USED TO SERVE MORE THAN ONE ROOM. ALS NOT IN CONTRACT BUT SHALL BE PROVIDED BY OWNER

KEY NOTES

Key Value	Keynote Text
02-01	REMOVE EXISTING FLOOR FINISH AND BASE
02-04	REMOVE EXISTING EXTERIOR WALL FOR NEW OPENING. COORDINATE OPENING SIZE WITH DOOR AND/OR WINDOW SCHEDULE.
02-13	REMOVE AND SALVAGE EXISTING MARKERBOARD FOR RE-INSTALLATION @ NEW LOCATION OR STORAGE. COORDINATE WITH OWNER.
02-21	REMOVE AND SALVAGE EXISTING HEAVY DUTY SHELVING RACK . COORDINATE RE-USE OR STORAGE OF SHELVES WITH OWNER.
02-22	REMOVE EXISTING PARTITION
02-28	REMOVE EXISTING DOOR AND FRAME
02-33	REMOVE EXISTING ROOM ID SIGNAGE - APPLICABLE TO ROOMS WITH CHANGED ROOM ASSIGNMENT
02-45	REMOVE EXISTING WALL CURB
02-54	EXISTING SINK TROUGH AND FAUCET TO REMAIN. PROTECT IN PLACE
02-58	EXISTING 2-TIER LOCKERS TO REMAIN. PROTECT IN PLACE
02-61	EXISTING RECESSED FLOOR DRAIN TROUGH, TO REMAIN. PROTECT IN PLACE.
02-83	REMOVE AND SALVAGE EXISTING DISTRICT STANDARD AV BLACKBOX FOR RE-INSTALLATION IN SAME ROOM. SEE NEW FLOOR PLAN FOR NEW LOCATION. COORDINATE WITH OWNER.
02-88	REMOVE & SALVAGE (E) STORAGE CABINETS FOR REUSE. COORDINATE WITH OWNER
02-90	REMOVE & REPLACE (E) MAXIMUM OCCUPANCY SIGN. SEE SIGNAGE PLAN.
03-06	PROVIDE SELF-LEVELING UNDERLAYMENT OVER EXISTING SLOPED CONCRETE FLOOR - LEVEL OUT TO ADJACENT CLASSROOM FLOOR. PREP FOR NEW SCHEDULED FLOOR FINISH.
03-08	NEW CONCRETE CURB UNDER NEW PARTITION (+/- 6" HIGH TO MATCH EXISTING ADJACENT CURBS)
08-02	NEW EXTERIOR HOLLOW METAL FRAMING SYSTEM AS SCHEDULED. MATCH EXISTING.
10-02	NEW MARKERBOARD
10-03	NEW BULLETIN BOARD (SIZE PER ELEVATIONS)
11-02	NEW 3' WIDE 2-TIER LOCKERS WITH LEGS, BOTTOM LOCKERS TO BE ACCESSIBLE, SEE 18/G3.21.0
11-17	OFCI - PAPER TOWEL DISPENSER, KIMBERLY-CLARK MOD.34346, PROVIDE BACKING @ GYP. BD & METAL STUD WALLS
11-18	OFCI - SOAP DISPENSER, GOJO SOAP DISPENSER # IS 0884-06-BCE14YL, PROVIDE BACKING @ GYP. BD & METAL STUD WALLS
22-02	NEW ACCESSIBLE STAINLESS STEEL SINK, SPD, SEE DET 17/A8.73.1
27-02	RELOCATED DISTRICT STANDARD AV BLACKBOX FROM CLASSROOM 232, CLASSROOM 229
27-04	(E) RELOCATED DISTRICT STANDARD AV BLACK BOX FROM SAME ROOM

FLOOR DEMO LEGEND

(SYMBOLS SHOWN - NOT ALL WILL BE USED ON PLAN)

- REMOVE (E) WALL OR ASSEMBLY, INCLUDING WINDOWS (SHOWN DASHED)
- REMOVE (E) DOOR AND FRAME, UON
- EXISTING WALLS AND COLUMNS

LEGEND

(SYMBOLS SHOWN - NOT ALL WILL BE USED ON PLAN)

- FRAMED PARTITION WALL, EXTEND TO FLOOR/ROOF STRUCTURE ABOVE, NON-RATED U.O.N. (SEE A0.01.0 FOR MORE INFORMATION)
- DOOR TYPE
- WINDOW / STOREFRONT TYPE
- EXISTING WALL, PARTITION, COLUMNS, & MISCELLANEOUS OBJECTS
- EXISTING 1-HR-RATED ASSEMBLY
- EXISTING 2-HR FIRE SEPARATION WALL
- NEW 1-HR RATED ASSEMBLY

NOLL & TAM ARCHITECTS
729 Heinz Avenue
Berkeley, CA 94710
tel 510.542.2200
fax 510.542.2201

ARCHITECTS SEAL

LICENSED ARCHITECT
CHRISTOPHER NOLL
No. C15916
REN. 12-31-21
STATE OF CALIFORNIA

APPROVALS

FILE NUMBER: 07-C1

DIVISION OF THE STATE ARCHITECT
APP# 01-117630
ACS_____FLS_____SSS_____
Date:

PROJECT TITLE

CONTRA COSTA CCD
D-4002
DVC SAN RAMON CAMPUS EXPANSION & RENOVATION

1690 Watermill Rd.
San Ramon, CA 94582

ISSUE TITLE
INCREMENT 1 - RENOVATION

ISSUE DATE	4/26/19
NOLL & TAM JOB NUMBER	21630

REVISIONS

	DATE	DESCRIPTION
1	6/21/19	INCR 1 RFI110.1

SHEET TITLE
DEMO & NEW - 1ST FLOOR - EAST - CLASSROOM 164 - DRAWING STUDIO

SHEET NUMBER
A2.33.1

10/11/2021 2:34:55 PM C:\Users\phan.dung\Documents\Revit Locals\DVCSR Expansion_Central 2020_phan.dung@nollandtam.com.rvt

LEGEND

(SYMBOLS SHOWN - NOT ALL WILL BE USED ON PLAN)

FRAMED PARTITION WALL, EXTEND TO FLOOR/ROOF STRUCTURE ABOVE, NON-RATED U.O.N. (SEE A0.01.0 FOR MORE INFORMATION)

DOOR TYPE

WINDOW / STOREFRONT TYPE

EXISTING WALL, PARTITION, COLUMNS, & MISCELLANEOUS OBJECTS

EXISTING 1-HR-RATED ASSEMBLY

EXISTING 2-HR FIRE SEPARATION WALL

NEW 1-HR RATED ASSEMBLY

FLOOR DEMO LEGEND

(SYMBOLS SHOWN - NOT ALL WILL BE USED ON PLAN)

REMOVE (E) WALL OR ASSEMBLY, INCLUDING WINDOWS (SHOWN DASHED)

REMOVE (E) DOOR AND FRAME, UON

EXISTING WALLS AND COLUMNS

KEY NOTES

Key Value	Keynote Text
02-01	REMOVE EXISTING FLOOR FINISH AND BASE
02-06	REMOVE EXISTING EXTERIOR WINDOW FOR NEW DOOR OPENING. REMOVE EXISTING CURB AS REQUIRED. COORDINATE WITH DOOR SCHEDULE.
02-13	REMOVE AND SALVAGE EXISTING MARKERBOARD FOR RE-INSTALLATION @ NEW LOCATION OR STORAGE. COORDINATE WITH OWNER.
02-14	REMOVE EXISTING 2-TIER METAL LOCKERS INCLUDING 6" CONCRETE LOCKER CURB
02-15	REMOVE EXISTING SHOWER BENCH AND PLUMBING ACCESSORIES
02-16	REMOVE EXISTING SINGLE OCCUPANCY RESTROOM, INCLUDING WATER CLOSET, LAVATORY AND ACCESSORIES, SPD
02-17	REMOVE EXISTING WOOD ATHLETIC FLOORING SYSTEM AND WALL BASE
02-18	REMOVE EXISTING CERAMIC TILE FLOORING AND MORTAR AT +/-2-1/2" DEPRESSED SLAB - SHOWER AND LOCKER AREA
02-19	REMOVE EXISTING FLOOR MOUNTED WOOD BENCH
02-21	REMOVE AND SALVAGE EXISTING HEAVY DUTY SHELVING RACK . COORDINATE RE-USE OR STORAGE OF SHELVES WITH OWNER.
02-31	REMOVE EXISTING DRINKING FOUNTAIN, SPD
02-32	REMOVE EXISTING WALL MOUNTED MIRROR
02-33	REMOVE EXISTING ROOM ID SIGNAGE - APPLICABLE TO ROOMS WITH CHANGED ROOM ASSIGNMENT
02-91	(E) WALL CLOCK TO REMAIN. COORDINATE TEMPORARY REMOVAL WITH OWNER TO PROTECT DURING CONSTRUCTION.
03-01	SELF-LEVELING CONCRETE TOPPING 0/ (E) SLAB ON GRADE

Key Value	Keynote Text
03-04	AT EXISTING DEPRESSED CONCRETE SLAB (@ EXISTING LOCKER ROOM, RESTROOM AREAS, AND ATHLETIC FLOOR) INSTALL SELF-LEVELING CONCRETE FINISH OVER CONCRETE TOPPING INFILL, SSD. MATCH HEIGHT OF EXISTING ADJACENT FLOOR FINISH. SEAL SELF-LEVELING CONCRETE FINISH.
06-03	NEW COUNTERTOP OVER PLAM BASE CABINETS - CASHIER STATION
06-04	NEW SOLID SURFACE COUNTERTOP OVER PLAM BASE CABINET, AND UPPER CABINET
06-05	NEW TALL STORAGE CABINETS
06-21	NEW FOOD SERVICE COUNTERTOP - SOLID SURFACE COUNTERTOP AND BASE CABINETS, POWER RECEPTACLE FOR MICROWAVE, OPENING FOR GARBAGE BIN
06-22	NEW SHIPPING, RECEIVING COUNTERTOP - SOLID SURFACE COUNTERTOP AND BASE CABINETS, UPPER CABINETS.
07-02	PROVIDE WEATHERSEAL AT GAPS AROUND DOOR (FOR AC SYSTEM IN MDF ROOM)
08-04	(N) WALL MOUNTED PUSH PLATE DOOR ACTUATOR
08-06	NEW INTERIOR 42" WOOD DOOR - WITH VISION LITE - 48" HIGH STAINLESS STEEL PROTECTION PLATE
10-08	RE-INSTALL HEAVY DUTY SHELVING RACK FROM EXISTING CERAMIC STUDIO 168. PROVIDE BACKING AND ANGLE CLIPS TO BRACE TO WALL.
10-10	RE-INSTALL EXISTING SLAT WALL FROM EXISTING BOOKSTORE 107
10-12	NEW EXTERIOR SIGNAGE LETTERS - 'BOOKSTORE', AS NOTED ON ELEVATION, MOUNTED TO FACE OF CEMENT PLASTER, SEE SIGNAGE PLAN AND ASSOCIATED DETAIL

Key Value	Keynote Text
10-23	RE-INSTALL EXISTING SINGLE SIDED GONDOLAS FROM EXISTING BOOKSTORE 107. EXISTING GONDOLAS (SHOWN HATCHED) ARE 6'-0" TALL. SHOP PAINT FRAMES TO NEW COLOR SCHEME
11-03	NEW REAR-LOADING BEVERAGE COOLERS, SED, SPD FOR ELECTRICAL AND PLUMBING REQUIREMENTS.SEE FOOD SERVICE DRAWINGS FOR SPECIFIC EQUIPMENT
11-09	NEW REFRIGERATED DISPLAY FOOD CASE, SED, SPD FOR ELECTRICAL AND PLUMBING REQUIREMENTS. SEE FOOD SERVICE DWGS
11-11	NEW MILKSHAKE BLENDING-FREEZER MACHINE - SED SPD - FOR WATER , DRAINAGE AND ELECTRICAL REQUIREMENTS. SEE FOOD SERVICE DWGS
11-13	NEW FREEZER, SED, SPD FOR ELECTRICAL AND PLUMBING REQUIREMENTS . SEE FOOD SERVICE DWGS
11-21	NEW 76" HIGH METAL CANTILEVER SHELVING (48" W x 18"D x 76"H) WITH SECURITY ROLL-DOWN SHUTTER (CLEAR SLATS) ON GUIDERAILS. ENDPANELS REQUIRED AT EACH SECTION OF ROLL-DOWN SHUTTER
11-28	(N) WALL-MOUNTED TELECOM EQUIPMENT RACK ON FIRE-RESISTANT PLYWOOD BACKING, STED
12-25	WALL MOUNTED FURNITURE/CASEWORK STORAGE UNIT, OFCI TYP, SEE FURNITURE PLAN. PROVIDE BACKING AT WALL - TOP AND BOTTOM.
12-26	NEW MICROWAVE, SED FOR POWER
22-03	NEW ACCESSIBLE HAND WASH SINK

SHEET NOTES

1. SEE REFLECTED CEILING PLANS, SSD, SMP, SED, SPD, SFAD, SFSD, STED FOR MORE DEMOLITION INFORMATION.
2. (E) GYPSUM BOARD OR OTHER INTERIOR FINISHES ON WALLS NOT BEING DEMOLISHED SHALL REMAIN IN PLACE UON. SEE SHEET NOTE #5. PATCH, REPAIR & PAINT EXISTING FINISHES AS AFFECTED BY SCOPE OF WORK,TO MATCH (E) ADJACENT SURFACES AS REQUIRED.
3. DIMENSIONS PROVIDED ON THE DRAWING ARE FOR REFERENCE ONLY. CONTRACTOR SHALL PROVIDE FIELD VERIFICATION AS REQUIRED IN AREA OF WORK
4. REFER TO FURNITURE PLAN FOR NON-FIXED FURNISHINGS AND EQUIPMENT
5. GENERAL CONTRACTOR TO COORDINATE BACKING AT ALL REQUIRED LOCATIONS IN NEW AND EXISTING WALLS, INCLUDING SELECTIVE DEMOLITION AND REPAIR OF EXISTING FINISHES TO PROVIDE BACKING IN EXISTING WALLS. BACKING IS REQUIRED FOR MOUNTING OF WALL MOUNTED EQUIPMENT INCLUDING, BUT NOT LIMITED TO, ACCESSORIES, FIXTURES, FIXED CASEWORK, ETC. SEE 6 & 7/S9.02.1 FOR BACKING DETAILS. FOR WALL-MOUNTED FURNITURE ITEMS SEE FURNITURE PLAN. AT EXISTING WALLS TO RECEIVE WALL MOUNTED UPPER CABINETS OR ITEMS EXCEEDING 50 LBS, WHERE EXISTING STUDS ARE LIGHTER THAN 16 GA, GYPSUM BOARD WILL NEED TO BE REMOVED TO INSTALL MIN 16 GA STUDS SISTERED TO EXISTING STUDS PER 7/S9.02.1. PATCH & REPAIR WALL TO MATCH EXISTING ASSEMBLIES AND FINISHES, UON.
6. WHERE NEW ROOM ID SIGNAGE IS PROVIDED, REMOVE EXISTING ROOM SIGNAGE THAT IS NO LONGER APPLICABLE. SEE A9.21.2 AND A9.22.1 FOR SIGNAGE
7. REFER TO SHEET A9.24.1 & A9.25.1 FOR NEW SIGNAGE DETAILS.
8. PROVIDE WINDOW SHADES AT EXTERIOR OR INTERIOR WINDOWS, SEE A8.50.1 FOR WINDOW SHADE INFORMATION. SEE DOOR COMMENTS FOR SHADES AT DOOR LITES
9. IN SCOPE AREA, AN ASSISTIVE LISTENING SYSTEM SHALL BE PROVIDED IN ASSEMBLY AREAS, INCLUDING CLASSROOMS. THE NUMBER OF RECEIVES SHALL BE EQUAL TO 4% OF TOTAL # OF SEATS, BUT NO LESS THAN TWO. 25% MIN OF RECEIVERS PROVIDED BUT NOT FEWER THAN TWO SHALL BE HEARING-AID COMPATIBLE. PORTABLE ASSISTIVE LISTENING SYTEM ARE USED TO SERVE MORE THAN ONE ROOM. ALS NOT IN CONTRACT BUT SHALL BE PROVIDED BY OWNER

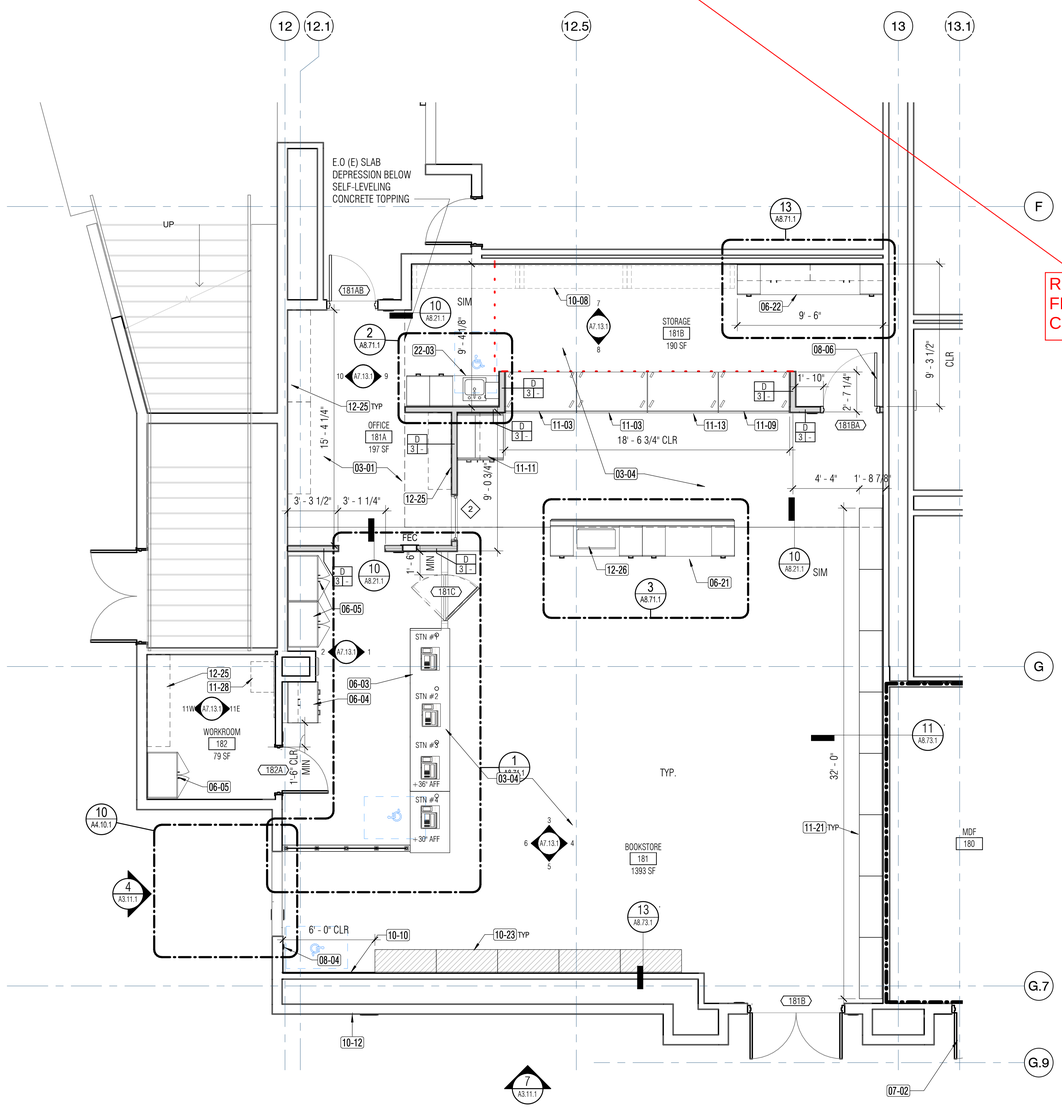

2 A2.34.1 **01 - FLOOR PLAN - EAST - BOOKSTORE**
1/4" = 1'-0"

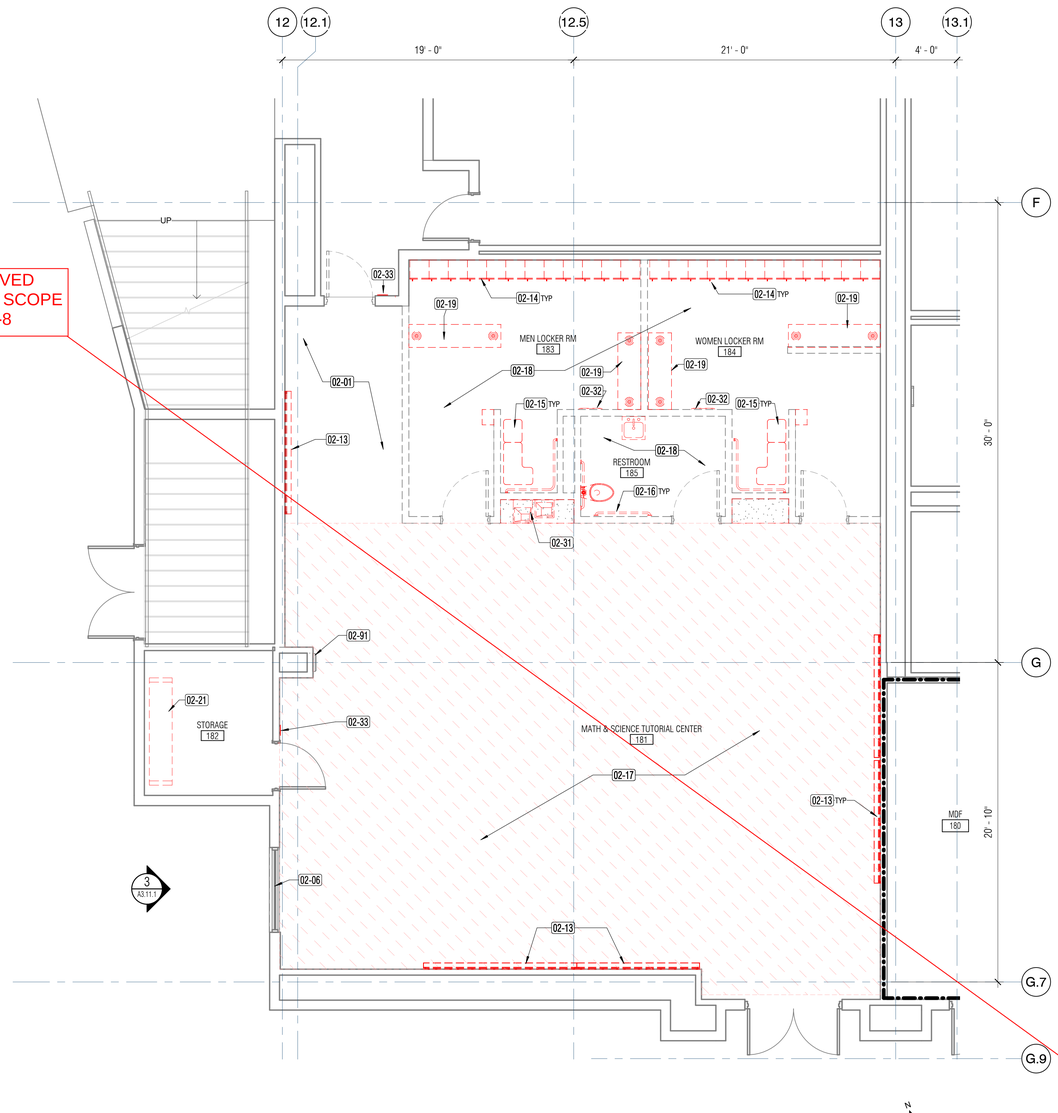

1 A2.34.1 **01 - FLOOR PLAN - EAST - (DEMO) MS TUTORIAL**
1/4" = 1'-0"

0' 2' 4' 8'

REMOVED FROM SCOPE CCDA-8

NOLL & TAM ARCHITECTS
729 Heinz Avenue
Berkeley, CA 94710
tel 510.542.2200
fax 510.542.2201

ARCHITECTS SEAL

LICENSED ARCHITECT
CHRISTOPHER NOLL
No. C15916
REN. 12-31-21
STATE OF CALIFORNIA

APPROVALS

FILE NUMBER: 07-C1

DIVISION OF THE STATE ARCHITECT
APP# 01-117630
ACS_____ FLS_____ SSS_____
Date:

PROJECT TITLE

CONTRA COSTA CCD
D-4002
DVC SAN RAMON CAMPUS EXPANSION & RENOVATION

1690 Watermill Rd.
San Ramon, CA 94582

ISSUE TITLE

INCREMENT 1 - RENOVATION

ISSUE DATE 4/26/19
NOLL & TAM JOB NUMBER 21630

REVISIONS

	DATE	DESCRIPTION

SHEET TITLE

DEMO & NEW - 1ST FLOOR - EAST - BOOKSTORE

SHEET NUMBER

A2.34.1

10/11/2021 2:34:59 PM C:\Users\phan.dung\Documents\Revit Locals\DVCSR Expansion_Central 2020_phan.dung@nollandtam.com.rvt

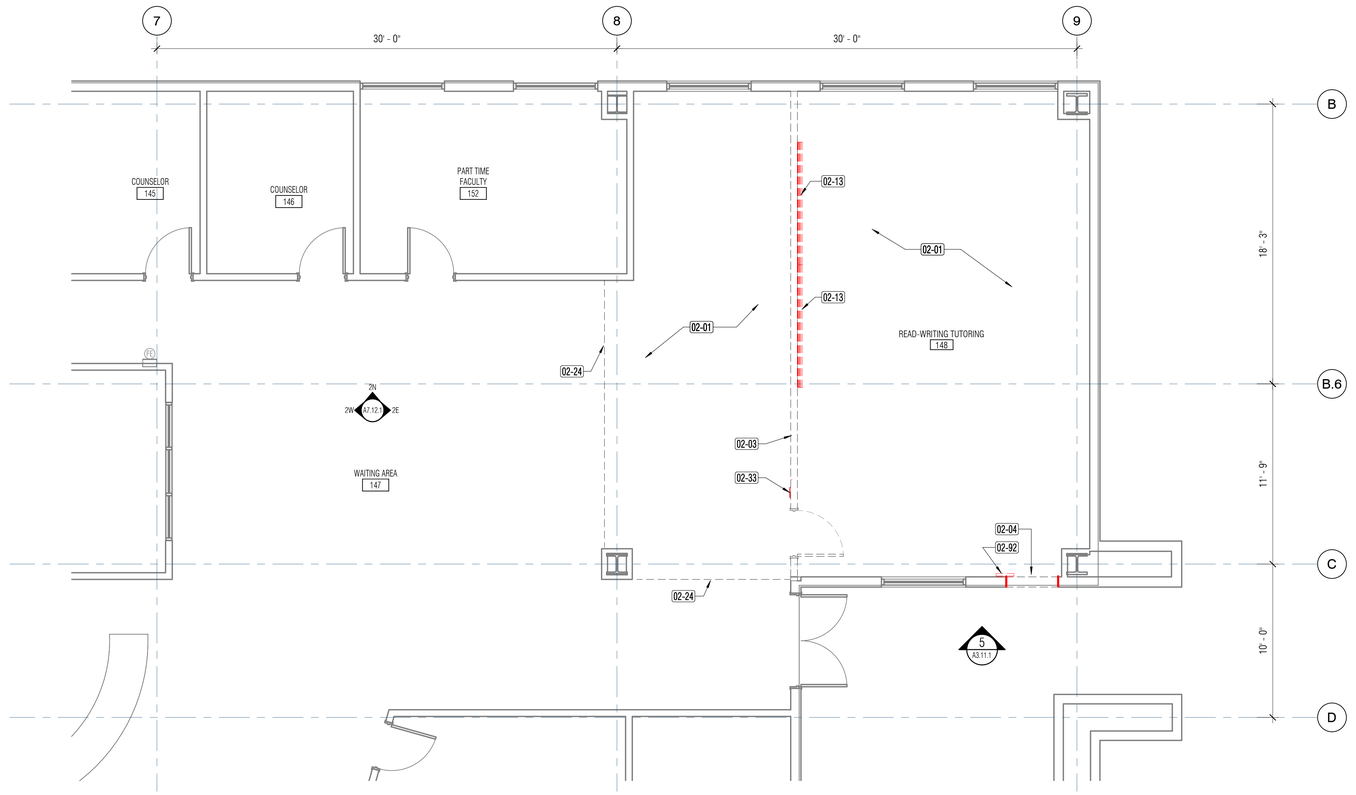

1 A2.35.1 **01 - FLOOR PLAN - WEST (DEMO) - READ STUDY TUTORIAL**
1/4" = 1'-0"

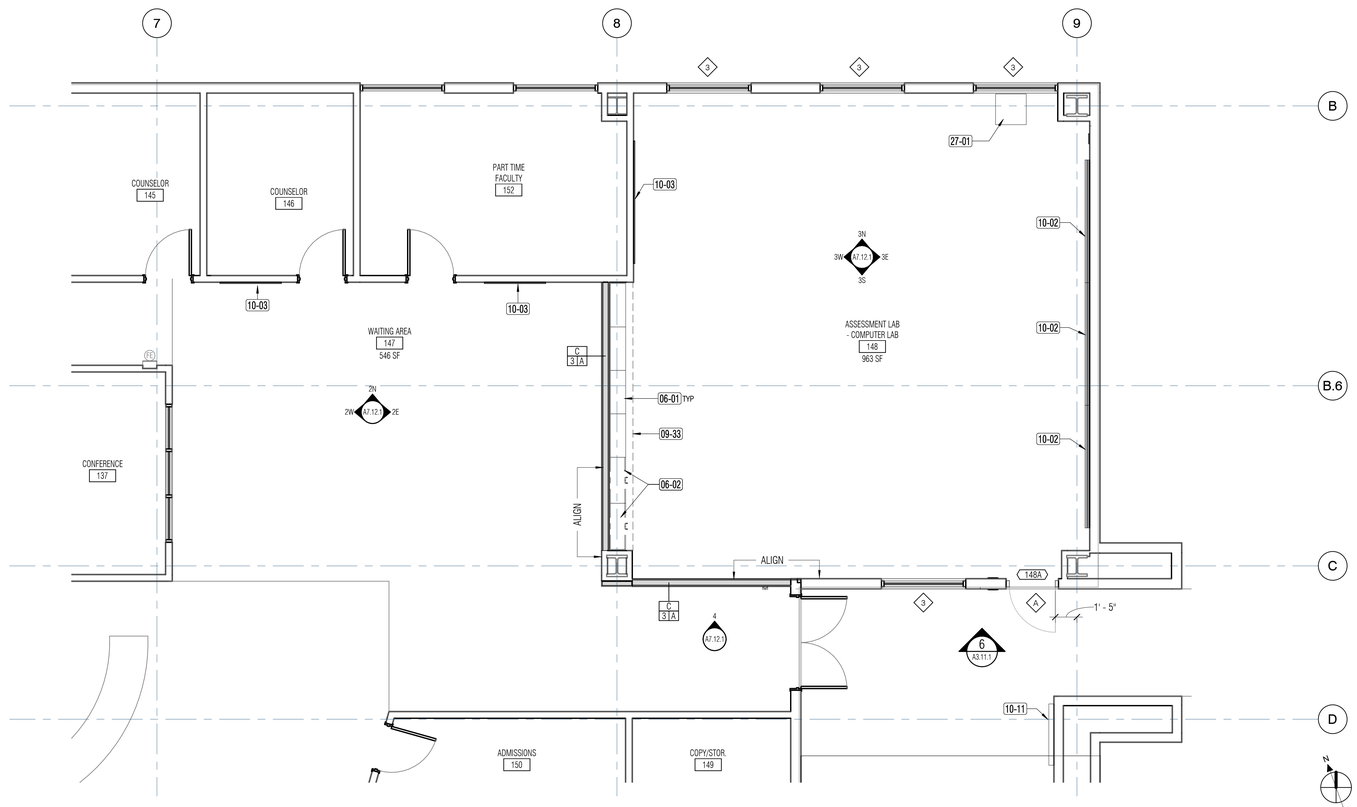

2 A2.35.1 **01 - FLOOR PLAN - WEST - ASSESSEMENT - WAITING AREA**
1/4" = 1'-0"

SHEET NOTES

1. SEE REFLECTED CEILING PLANS, SSD, SMP, SED, SPD, SFAD, SFSD, STED FOR MORE DEMOLITION INFORMATION.
2. (E) GYPSUM BOARD OR OTHER INTERIOR FINISHES ON WALLS NOT BEING DEMOLISHED SHALL REMAIN IN PLACE UON. SEE SHEET NOTE #5. PATCH, REPAIR & PAINT EXISTING FINISHES AS AFFECTED BY SCOPE OF WORK,TO MATCH (E) ADJACENT SURFACES AS REQUIRED.
3. DIMENSIONS PROVIDED ON THE DRAWING ARE FOR REFERENCE ONLY. CONTRACTOR SHALL PROVIDE FIELD VERIFICATION AS REQUIRED IN AREA OF WORK
4. REFER TO FURNITURE PLAN FOR NON-FIXED FURNISHINGS AND EQUIPMENT
5. GENERAL CONTRACTOR TO COORDINATE BACKING AT ALL REQUIRED LOCATIONS IN NEW AND EXISTING WALLS, INCLUDING SELECTIVE DEMOLITION AND REPAIR OF EXISTING FINISHES TO PROVIDE BACKING IN EXISTING WALLS. BACKING IS REQUIRED FOR MOUNTING OF WALL MOUNTED EQUIPMENT INCLUDING, BUT NOT LIMITED TO, ACCESSORIES, FIXTURES, FIXED CASEWORK..ETC. SEE 6 & 7/S9.02.1 FOR BACKING DETAILS. FOR WALL-MOUNTED FURNITURE ITEMS SEE FURNITURE PLAN. AT EXISTING WALLS TO RECEIVE WALL MOUNTED UPPER CABINETS OR ITEMS EXCEEDING 50 LBS, WHERE EXISTING STUDS ARE LIGHTER THAN 16 GA, GYPSUM BOARD WILL NEED TO BE REMOVED TO INSTALL MIN 16 GA STUDS SISTERED TO EXISTING STUDS PER 7/S9.02.1. PATCH & REPAIR WALL TO MATCH EXISTING ASSEMBLIES AND FINISHES, UON.
6. WHERE NEW ROOM ID SIGNAGE IS PROVIDED, REMOVE EXISTING ROOM SIGNAGE THAT IS NO LONGER APPLICABLE. SEE A9.21.2 AND A9.22.1 FOR SIGNAGE
7. REFER TO SHEET A9.24.1 & A9.25.1 FOR NEW SIGNAGE DETAILS.
8. PROVIDE WINDOW SHADES AT EXTERIOR OR INTERIOR WINDOWS, SEE A8.50.1 FOR WINDOW SHADE INFORMATION. SEE DOOR COMMENTS FOR SHADES AT DOOR LITES
9. IN SCOPE AREA, AN ASSISTIVE LISTENING SYSTEM SHALL BE PROVIDED IN ASSEMBLY AREAS, INCLUDING CLASSROOMS. THE NUMBER OF RECEIVES SHALL BE EQUAL TO 4% OF TOTAL # OF SEATS, BUT NO LESS THAN TWO. 25% MIN OF RECEIVERS PROVIDED BUT NOT FEWER THAN TWO SHALL BE HEARING-AID COMPATIBLE. PORTABLE ASSISTIVE LISTENING SYTEM ARE USED TO SERVE MORE THAN ONE ROOM. ALS NOT IN CONTRACT BUT SHALL BE PROVIDED BY OWNER

KEY NOTES

Key Value	Keynote Text
02-01	REMOVE EXISTING FLOOR FINISH AND BASE
02-03	REMOVE EXISTING WALL AND DOORS (WHERE DASHED)
02-04	REMOVE EXISTING EXTERIOR WALL FOR NEW OPENING. COORDINATE OPENING SIZE WITH DOOR AND/OR WINDOW SCHEDULE.
02-13	REMOVE AND SALVAGE EXISTING MARKERBOARD FOR RE-INSTALLATION @ NEW LOCATION OR STORAGE. COORDINATE WITH OWNER.
02-24	REMOVE EXSTING FLOOR FINISH AND BASE UP TO THIS EXTENT. REST OF WAITING AREA FLOOR FINISH AND BASE TO REMAIN
02-33	REMOVE EXISTING ROOM ID SIGNAGE - APPLICABLE TO ROOMS WITH CHANGED ROOM ASSIGNMENT
02-92	REMOVE & SALVAGE (E) WALL CLOCK FOR RE-USE AS NEEDED. COORDINATE W/ OWNER.
06-01	NEW 42" HIGH WOOD SHELVING UNIT - ADJUSTABLE SHELVES FOR BACKPACK STORAGE
06-02	NEW 42" HIGH X 12' DEEP WOOD SHELVING WITH CABINET DOORS FOR SUPPLY STORAGE
09-33	NEW SOFFIT ABOVE, SEE RCP
10-02	NEW MARKERBOARD
10-03	NEW BULLETIN BOARD (SIZE PER ELEVATIONS)
10-11	NEW 4" DEEP GLASS DISPLAY CASE, MOUNTED TO EXTERIOR WALL.
27-01	NEW DISTRICT STANDARD AV BLACKBOX, SEE TELECOM DWGS

FLOOR DEMO LEGEND

(SYMBOLS SHOWN - NOT ALL WILL BE USED ON PLAN)

- REMOVE (E) WALL OR ASSEMBLY, INCLUDING WINDOWS (SHOWN DASHED)
- REMOVE (E) DOOR AND FRAME, UON
- EXISTING WALLS AND COLUMNS

LEGEND

(SYMBOLS SHOWN - NOT ALL WILL BE USED ON PLAN)

- FRAMED PARTITION WALL, EXTEND TO FLOOR/ROOF STRUCTURE ABOVE, NON-RATED U.O.N. (SEE A0.01.0 FOR MORE INFORMATION)
- DOOR TYPE
- WINDOW / STOREFRONT TYPE
- EXISTING WALL, PARTITION, COLUMNS, & MISCELLANEOUS OBJECTS
- EXISTING 1-HR-RATED ASSEMBLY
- EXISTING 2-HR FIRE SEPARATION WALL
- NEW 1-HR RATED ASSEMBLY

NOLL & TAM ARCHITECTS
729 Heinz Avenue
Berkeley, CA 94710
tel 510.542.2200
fax 510.542.2201

ARCHITECTS SEAL

LICENSED ARCHITECT
CHRISTOPHER NOLL
No. C15916
REN. 12-31-21
STATE OF CALIFORNIA

APPROVALS

FILE NUMBER: 07-C1

DIVISION OF THE STATE ARCHITECT
APP# 01-117630
ACS_____FLS_____SSS_____
Date:

PROJECT TITLE

CONTRA COSTA CCD
D-4002
DVC SAN RAMON CAMPUS EXPANSION & RENOVATION

1690 Watermill Rd.
San Ramon, CA 94582

ISSUE TITLE
INCREMENT 1 - RENOVATION

ISSUE DATE: **4/26/19**
NOLL & TAM JOB NUMBER: **21630**

REVISIONS

	DATE	DESCRIPTION

SHEET TITLE
DEMO & NEW -1ST FLOOR - WEST - ASSESSMENT LAB

SHEET NUMBER
A2.35.1

10/11/2021 2:35:03 PM C:\Users\phan.dung\Documents\Revit Locals\DVCSR Expansion_Central 2020_phan.dung@nollandtam.com.rvt

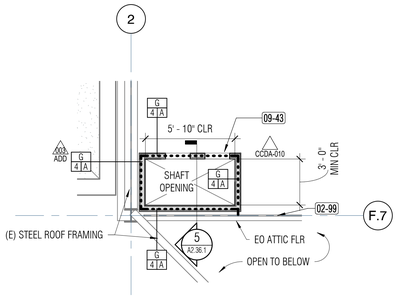

3 A2.36.1 **03 - ATTIC FLOOR PLAN @ SHAFT**
1/4" = 1'-0"

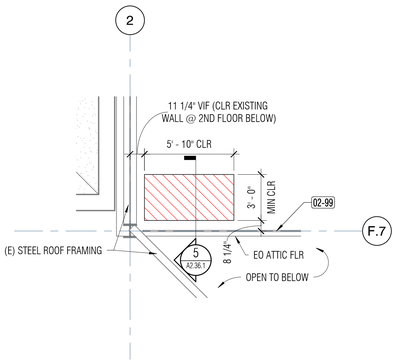

4 A2.36.1 **03 - ATTIC DEMO FLOOR PLAN @ SHAFT**
1/4" = 1'-0"

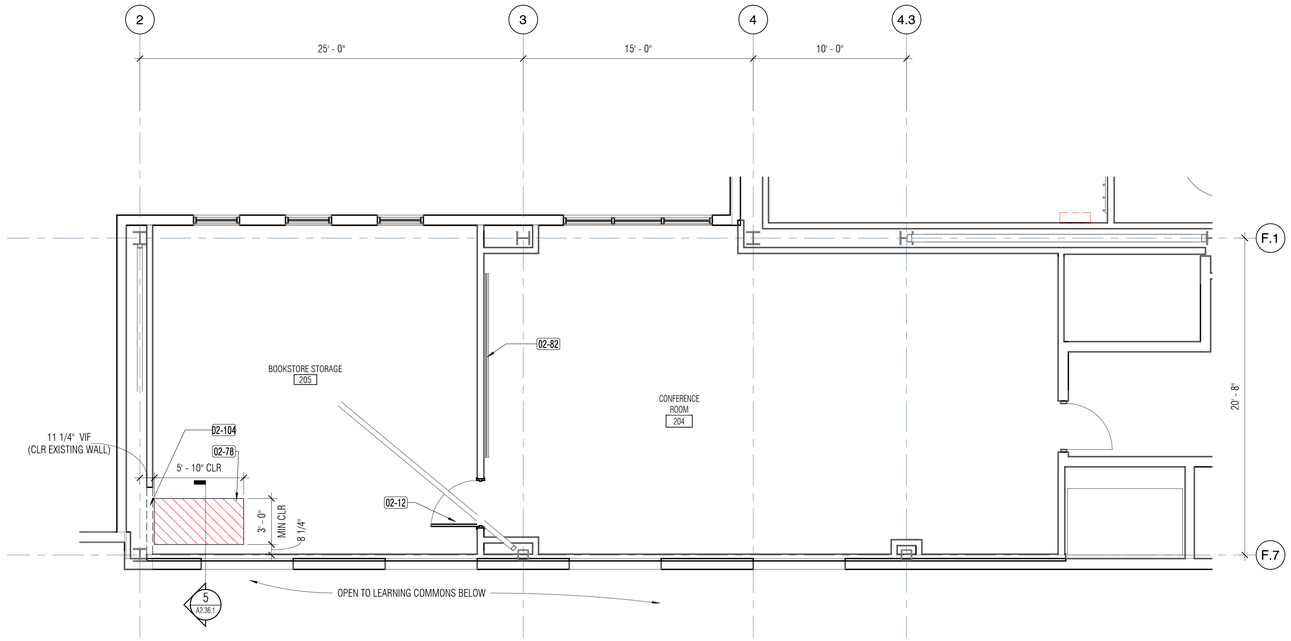

1 A2.36.1 **02 - FLOOR PLAN - WEST - (DEMO) EXISTING STORAGE & CONFERENCE ROOMS**
1/4" = 1'-0"

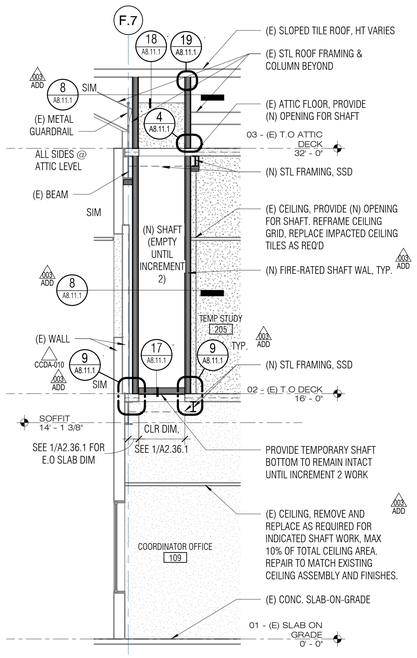

5 A2.36.1 **SECTION @ SHAFT FOR FUTURE CAFE EXHAUST**
1/4" = 1'-0"

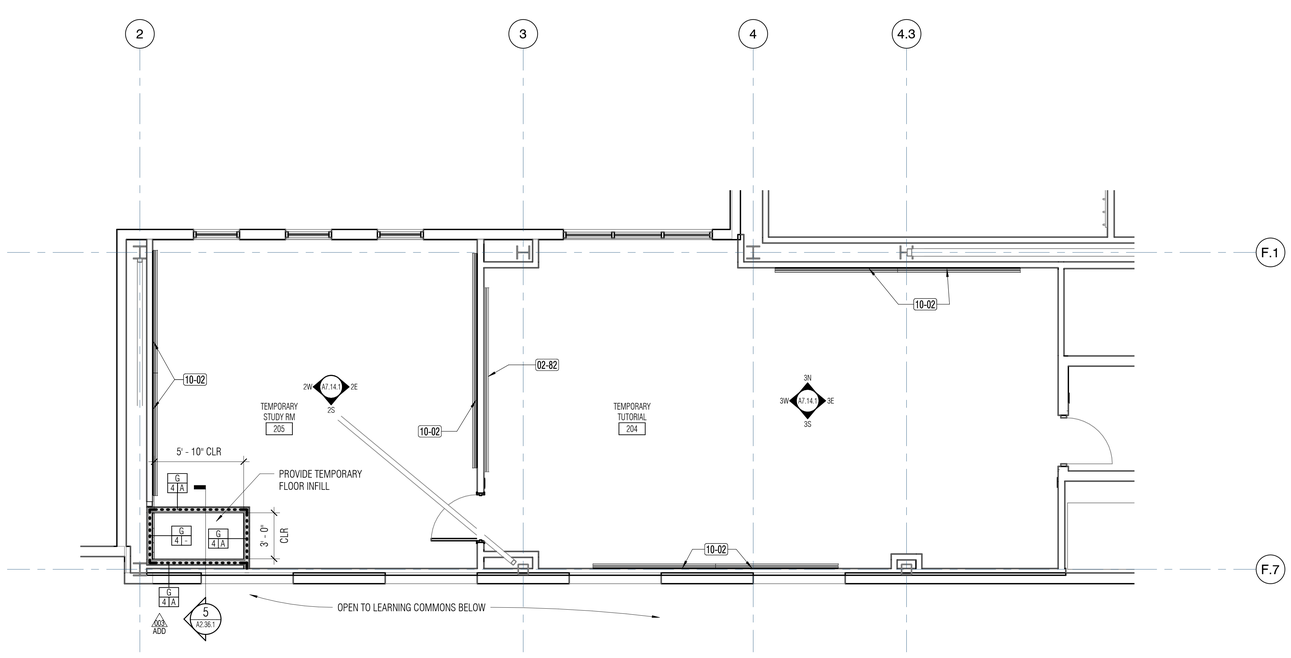

2 A2.36.1 **02 - FLOOR PLAN - WEST - TEMPORARY TUTORIAL & STUDY**
1/4" = 1'-0"

0' 2' 4' 8'

N

SHEET NOTES

1. SEE REFLECTED CEILING PLANS, SSD, SMP, SED, SPD, SFAD, SFSD, STED FOR MORE DEMOLITION INFORMATION.
2. (E) GYPSUM BOARD OR OTHER INTERIOR FINISHES ON WALLS NOT BEING DEMOLISHED SHALL REMAIN IN PLACE UON. SEE SHEET NOTE #5. PATCH, REPAIR & PAINT EXISTING FINISHES AS AFFECTED BY SCOPE OF WORK,TO MATCH (E) ADJACENT SURFACES AS REQUIRED.
3. DIMENSIONS PROVIDED ON THE DRAWING ARE FOR REFERENCE ONLY. CONTRACTOR SHALL PROVIDE FIELD VERIFICATION AS REQUIRED IN AREA OF WORK
4. REFER TO FURNITURE PLAN FOR NON-FIXED FURNISHINGS AND EQUIPMENT
5. GENERAL CONTRACTOR TO COORDINATE BACKING AT ALL REQUIRED LOCATIONS IN NEW AND EXISTING WALLS, INCLUDING SELECTIVE DEMOLITION AND REPAIR OF EXISTING FINISHES TO PROVIDE BACKING IN EXISTING WALLS. BACKING IS REQUIRED FOR MOUNTING OF WALL MOUNTED EQUIPMENT INCLUDING, BUT NOT LIMITED TO, ACCESSORIES, FIXTURES, FIXED CASEWORK.,ETC. SEE 6 & 7/S9.02.1 FOR BACKING DETAILS. FOR WALL-MOUNTED FURNITURE ITEMS SEE FURNITURE PLAN. AT EXISTING WALLS TO RECEIVE WALL MOUNTED UPPER CABINETS OR ITEMS EXCEEDING 50 LBS, WHERE EXISTING STUDS ARE LIGHTER THAN 16 GA, GYPSUM BOARD WILL NEED TO BE REMOVED TO INSTALL MIN 16 GA STUDS SISTERED TO EXISTING STUDS PER 7/S9.02.1. PATCH & REPAIR WALL TO MATCH EXISTING ASSEMBLIES AND FINISHES, UON.
6. WHERE NEW ROOM ID SIGNAGE IS PROVIDED, REMOVE EXISTING ROOM SIGNAGE THAT IS NO LONGER APPLICABLE. SEE A9.21.2 AND A9.22.1 FOR SIGNAGE
7. REFER TO SHEET A9.24.1 & A9.25.1 FOR NEW SIGNAGE DETAILS.
8. PROVIDE WINDOW SHADES AT EXTERIOR OR INTERIOR WINDOWS, SEE A8.50.1 FOR WINDOW SHADE INFORMATION. SEE DOOR COMMENTS FOR SHADES AT DOOR LITES
9. IN SCOPE AREA, AN ASSISTIVE LISTENING SYSTEM SHALL BE PROVIDED IN ASSEMBLY AREAS, INCLUDING CLASSROOMS. THE NUMBER OF RECEIVES SHALL BE EQUAL TO 4% OF TOTAL # OF SEATS, BUT NO LESS THAN TWO. 25% MIN OF RECEIVERS PROVIDED BUT NOT FEWER THAN TWO SHALL BE HEARING-AID COMPATIBLE. PORTABLE ASSISTIVE LISTENING SYTEM ARE USED TO SERVE MORE THAN ONE ROOM. ALS NOT IN CONTRACT BUT SHALL BE PROVIDED BY OWNER

KEY NOTES

Key Value	Keynote Text
02-12	REMOVE & SALVAGE EXISTING DOOR PANEL ONLY. COORDINATE STORAGE W/ OWNER. PROTECT IN PLACE EXISTING DOOR FRAME.
02-78	REMOVE (E) STRUCTURAL DECK, SSD
02-82	EXISTING MARKERBOARD TO REMAIN
02-99	(E) METAL GUARDRAIL TO REMAIN
ADD 003 02-104	REMOVE INDICATED PORTION OF EXISTING PARTITION AS REQUIRED FOR PARTIAL REPLACEMENT AT NEW SHAFT WALL.
09-43	PROVIDE FRAMED OPENING FOR (2) 20 INCH DIAMETER DUCT PENETRATIONS. CONTRACTOR TO COORDINATE LOCATIONS WITH INCREMENT 2 MECHANICAL SCOPE. INFILL FRAMED OPENINGS IN INCREMENT 1 PER THE LISTED PARTITION TYPE ASSEMBLY.
10-02	NEW MARKERBOARD

FLOOR DEMO LEGEND

(SYMBOLS SHOWN - NOT ALL WILL BE USED ON PLAN)

- REMOVE (E) WALL OR ASSEMBLY, INCLUDING WINDOWS (SHOWN DASHED)
- REMOVE (E) DOOR AND FRAME, UON
- EXISTING WALLS AND COLUMNS

LEGEND

(SYMBOLS SHOWN - NOT ALL WILL BE USED ON PLAN)

- FRAMED PARTITION WALL, EXTEND TO FLOOR/ROOF STRUCTURE ABOVE, NON-RATED U.O.N. (SEE A0.01.0 FOR MORE INFORMATION)
- DOOR TYPE
- WINDOW / STOREFRONT TYPE
- EXISTING WALL, PARTITION, COLUMNS, & MISCELLANEOUS OBJECTS
- EXISTING 1-HR-RATED ASSEMBLY
- EXISTING 2-HR FIRE SEPARATION WALL
- NEW 1-HR RATED ASSEMBLY

NOLL & TAM ARCHITECTS
729 Heinz Avenue
Berkeley, CA 94710
tel 510.542.2200
fax 510.542.2201

ARCHITECTS SEAL

LICENSED ARCHITECT
CHRISTOPHER NOLL
No. C15916
REN. 12-31-21
STATE OF CALIFORNIA

APPROVALS

FILE NUMBER: 07-C1

DIVISION OF THE STATE ARCHITECT
APP# 01-117630
ACS_____ FLS_____ SSS_____
Date:

PROJECT TITLE

CONTRA COSTA CCD
D-4002
DVC SAN RAMON CAMPUS EXPANSION & RENOVATION

1690 Watermill Rd.
San Ramon, CA 94582

ISSUE TITLE
INCREMENT 1 - RENOVATION

ISSUE DATE	4/26/19
NOLL & TAM JOB NUMBER	21630

REVISIONS

	DATE	DESCRIPTION
1	1/30/19	BID ADDENDUM 3
2	7/10/19	INC 1 RFI102.4

SHEET TITLE
DEMO & NEW - 2ND FLOOR - WEST - TEMPORARY TUTORIAL & STUDY ROOM

SHEET NUMBER
A2.36.1

10/11/2021 2:35:08 PM C:\Users\phan.dung\Documents\Revit Locals\DVCSR Expansion_ Central 2020_phan.dung@nollandtam.com.rvt

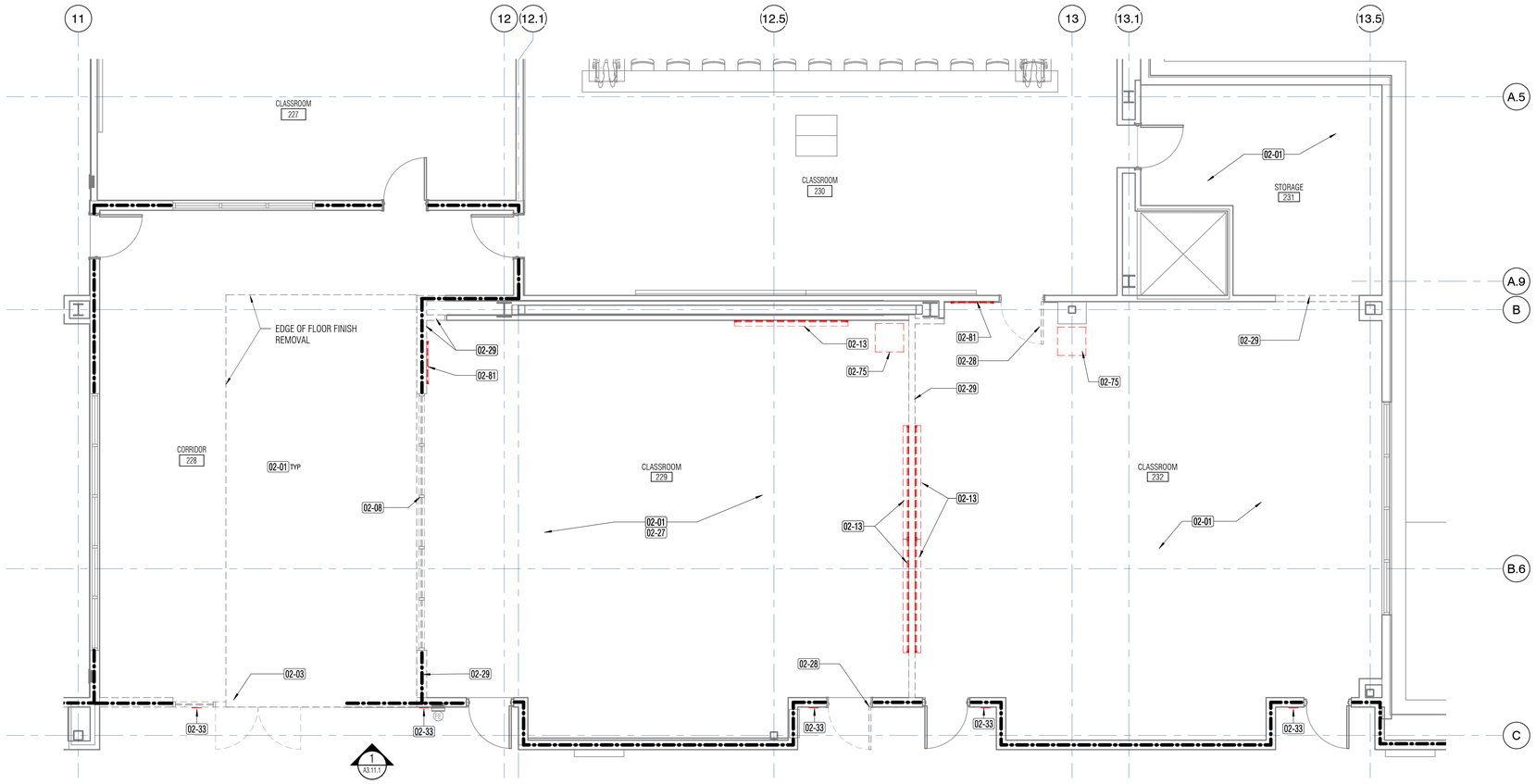

1 A2.37.1 **02 - FLOOR PLAN - EAST - (DEMO) CLASSROOMS - AP**

1/4" = 1'-0"

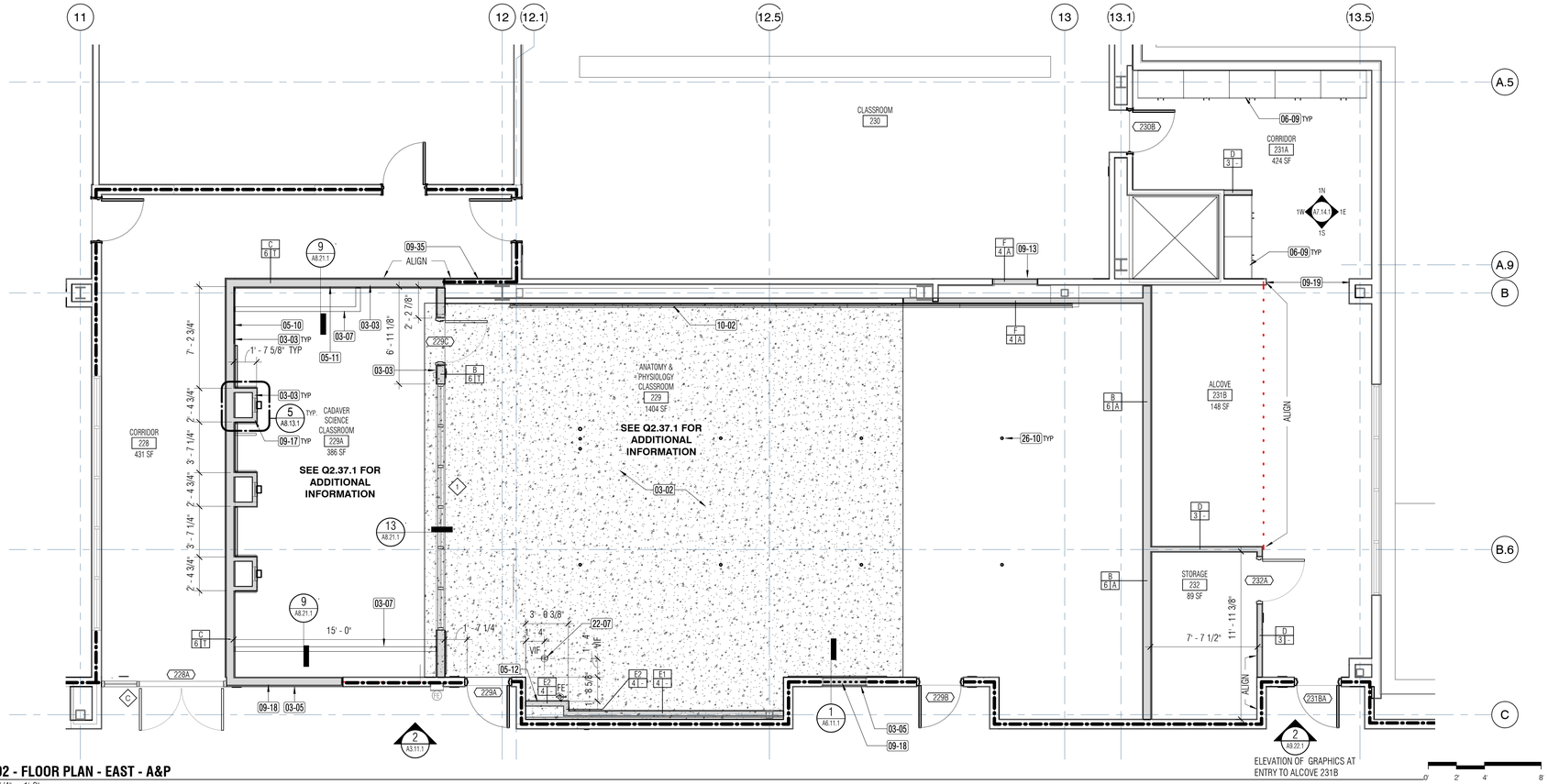

2 A2.37.1 **02 - FLOOR PLAN - EAST - A&P**

1/4" = 1'-0"

SHEET NOTES

1. SEE REFLECTED CEILING PLANS, SSD, SMP, SED, SPD, SFAD, SFSD, STED FOR MORE DEMOLITION INFORMATION.
2. (E) GYPSUM BOARD OR OTHER INTERIOR FINISHES ON WALLS NOT BEING DEMOLISHED SHALL REMAIN IN PLACE UON. SEE SHEET NOTE #5. PATCH, REPAIR & PAINT EXISTING FINISHES AS AFFECTED BY SCOPE OF WORK,TO MATCH (E) ADJACENT SURFACES AS REQUIRED.
3. DIMENSIONS PROVIDED ON THE DRAWING ARE FOR REFERENCE ONLY. CONTRACTOR SHALL PROVIDE FIELD VERIFICATION AS REQUIRED IN AREA OF WORK
4. REFER TO FURNITURE PLAN FOR NON-FIXED FURNISHINGS AND EQUIPMENT
5. GENERAL CONTRACTOR TO COORDINATE BACKING AT ALL REQUIRED LOCATIONS IN NEW AND EXISTING WALLS, INCLUDING SELECTIVE DEMOLITION AND REPAIR OF EXISTING FINISHES TO PROVIDE BACKING IN EXISTING WALLS. BACKING IS REQUIRED FOR MOUNTING OF WALL MOUNTED EQUIPMENT INCLUDING, BUT NOT LIMITED TO, ACCESSORIES, FIXTURES, FIXED CASEWORK,.ETC. SEE 6 & 7/S9.02.1 FOR BACKING DETAILS. FOR WALL-MOUNTED FURNITURE ITEMS SEE FURNITURE PLAN. AT EXISTING WALLS TO RECEIVE WALL MOUNTED UPPER CABINETS OR ITEMS EXCEEDING 50 LBS, WHERE EXISTING STUDS ARE LIGHTER THAN 16 GA, GYPSUM BOARD WILL NEED TO BE REMOVED TO INSTALL MIN 16 GA STUDS SISTERED TO EXISTING STUDS PER 7/S9.02.1. PATCH & REPAIR WALL TO MATCH EXISTING ASSEMBLIES AND FINISHES, UON.
6. WHERE NEW ROOM ID SIGNAGE IS PROVIDED, REMOVE EXISTING ROOM SIGNAGE THAT IS NO LONGER APPLICABLE. SEE A9.21.2 AND A9.22.1 FOR SIGNAGE
7. REFER TO SHEET A9.24.1 & A9.25.1 FOR NEW SIGNAGE DETAILS.
8. PROVIDE WINDOW SHADES AT EXTERIOR OR INTERIOR WINDOWS, SEE A8.50.1 FOR WINDOW SHADE INFORMATION. SEE DOOR COMMENTS FOR SHADES AT DOOR LITES
9. IN SCOPE AREA, AN ASSISTIVE LISTENING SYSTEM SHALL BE PROVIDED IN ASSEMBLY AREAS, INCLUDING CLASSROOMS. THE NUMBER OF RECEIVES SHALL BE EQUAL TO 4% OF TOTAL # OF SEATS, BUT NO LESS THAN TWO. 25% MIN OF RECEIVERS PROVIDED BUT NOT FEWER THAN TWO SHALL BE HEARING-AID COMPATIBLE. PORTABLE ASSISTIVE LISTENING SYTEM ARE USED TO SERVE MORE THAN ONE ROOM. ALS NOT IN CONTRACT BUT SHALL BE PROVIDED BY OWNER

KEY NOTES

Key Value	Keynote Text
02-01	REMOVE EXISTING FLOOR FINISH AND BASE
02-03	REMOVE EXISTING WALL AND DOORS (WHERE DASHED)
02-08	REMOVE EXISTING INTERIOR WINDOW
02-13	REMOVE AND SALVAGE EXISTING MARKERBOARD FOR RE-INSTALLATION @ NEW LOCATION OR STORAGE. COORDINATE WITH OWNER.
02-27	REMOVE EXISTING RAISED FLOOR SYSTEM. RECONFIGURE UTILITIES AND LOW VOLTAGE CABLING AS REQUIRED FOR NEW LAYOUT
02-28	REMOVE EXISTING DOOR AND FRAME
02-29	REMOVE PORTION OF EXISTING PARTITION AS INDICATED
02-33	REMOVE EXISTING ROOM ID SIGNAGE - APPLICABLE TO ROOMS WITH CHANGED ROOM ASSIGNMENT
02-75	REMOVE AND SALVAGE (E) DISTRICT STANDARD AV BLACK BOX FOR REUSE. COORDINATE WITH OWNER.
02-81	REMOVE & SALVAGE (E) TACK BOARD(S). COORDINATE WITH OWNER.
03-02	INFILL EXISTING DEPRESSED CONCRETE DECK WITH 1" THICK HIGH DENSITY POLYSTYRENE FOAM BOARD OVERLAID WITH 1 ½" THICK LIGHTWEIGHT CONCRETE TOPPING SLAB, SSD. LEVEL TO EXISTING ADJACENT SLAB AND PREPARE FOR NEW SCHEDULED FINISHES. PROVIDE 2 1/2" LIGHTWEIGHT CONC FILL @ CADAVER LAB.
03-03	NEW PARTITION ON 4" CONCRETE CURB
03-05	PROVIDE NEW CONTINUOUS 6" HIGH CONCRETE CURB WITH CONTINUOUS WATERSTOP AT AREAS OF NEW EXTERIOR WALL INFILL
03-07	PROVIDE NEW 4" HIGH, LIGHT WEIGHT CONCRETE CURB AT CASEWORK.
05-10	PROVIDE 24" TALL x 5'-0" WIDE CONT. BACKING CENTERED AT 8'-3" AFF. FOR OFOI WALL MOUNTED TELEVISION BRACKET. ASSUME 150 LB LOAD. PROVIDE OPENINGS IN BACKING FOR ELECTRICAL & DATA J-BOXES. SEE ELECTRICAL AND TELECOM DRAWINGS.
05-11	PROVIDE WALL BACKING FOR FAUCET SPRAYER WALL BRACKET, SEE S9.02.1
05-12	PROVIDE WALL WALL BACKING FOR EYE WASH/SAFETY SHOWER PER 3/A8.13.1
06-09	NEW GLASS DISPLAY CABINETS
09-13	INFILL EXISTING OPENING PATCH AND REPAIR TO MATCH EXISTING ADJACENT ASSEMBLIES AND FINISHES.
09-17	NEW MECHANICAL EXHAUST CHASE, SEE LAB PLANS & SMD
09-18	NEW WALL INFILL WITH CEMENT PLASTER AT EXISTING OPENING. FINISH & TEXTURE TO MATCH EXISTING. SEE 1/A6.11.1.
09-19	PROVIDE NEW STUDS AND GYP .BD. AT NEW OPENING TO MATCH EXISTING ASSEMBLIES AND FINISHES.
09-35	(N) LAYER OF 5/8" GYPSUM WALL BOARD, FULL HEIGHT OF EXISTING WALL
10-02	NEW MARKERBOARD
22-07	NEW FLOOR DRAIN AT EMERGENCY EYE WASH/SAFETY SHOWER. PROVIDE LOCAL SLOPE, MAX. 2% ALL DIRECTIONS, TO DRAIN. SEE ALSO Q2.37.1
26-10	ELECTRICAL SUPPLY FLOOR PENETRATION AT LAB ISLAND BENCHES - SEE LAB PLANS & SED

FLOOR DEMO LEGEND

(SYMBOLS SHOWN - NOT ALL WILL BE USED ON PLAN)

- REMOVE (E) WALL OR ASSEMBLY, INCLUDING WINDOWS (SHOWN DASHED)
- REMOVE (E) DOOR AND FRAME, UON
- EXISTING WALLS AND COLUMNS

LEGEND

(SYMBOLS SHOWN - NOT ALL WILL BE USED ON PLAN)

- A 4 | 1 — FRAMED PARTITION WALL, EXTEND TO FLOOR/ROOF STRUCTURE ABOVE, NON-RATED U.O.N. (SEE A0.01.0 FOR MORE INFORMATION)
- 001A — DOOR TYPE
- A — WINDOW / STOREFRONT TYPE
- EXISTING WALL, PARTITION, COLUMNS, & MISCELLANEOUS OBJECTS
- EXISTING 1-HR-RATED ASSEMBLY
- EXISTING 2-HR FIRE SEPARATION WALL
- NEW 1-HR RATED ASSEMBLY

NOLL & TAM ARCHITECTS

729 Heinz Avenue
Berkeley, CA 94710
tel 510.542.2200
fax 510.542.2201

ARCHITECTS SEAL

LICENSED ARCHITECT
CHRISTOPHER NOLL
No. C15916
REN. 12-31-21
STATE OF CALIFORNIA

APPROVALS

FILE NUMBER: 07-C1

DIVISION OF THE STATE ARCHITECT

APP# 01-117630

ACS_____ FLS_____ SSS_____
Date:

PROJECT TITLE

CONTRA COSTA CCD
D-4002
DVC SAN RAMON CAMPUS EXPANSION & RENOVATION

1690 Watermill Rd.
San Ramon, CA 94582

ISSUE TITLE

INCREMENT 1 - RENOVATION

ISSUE DATE	4/26/19
NOLL & TAM JOB NUMBER	21630

REVISIONS

	DATE	DESCRIPTION
1	1/30/19	BID ADDENDUM 3

SHEET TITLE

DEMO & NEW - 2ND FLOOR - EAST - A&P CLASSROOM

SHEET NUMBER

A2.37.1

10/11/2021 2:35:13 PM C:\Users\phan.dung\Documents\Revit Locals\DVCSR Expansion_Central 2020_phan.dung@nollandtam.com.rvt

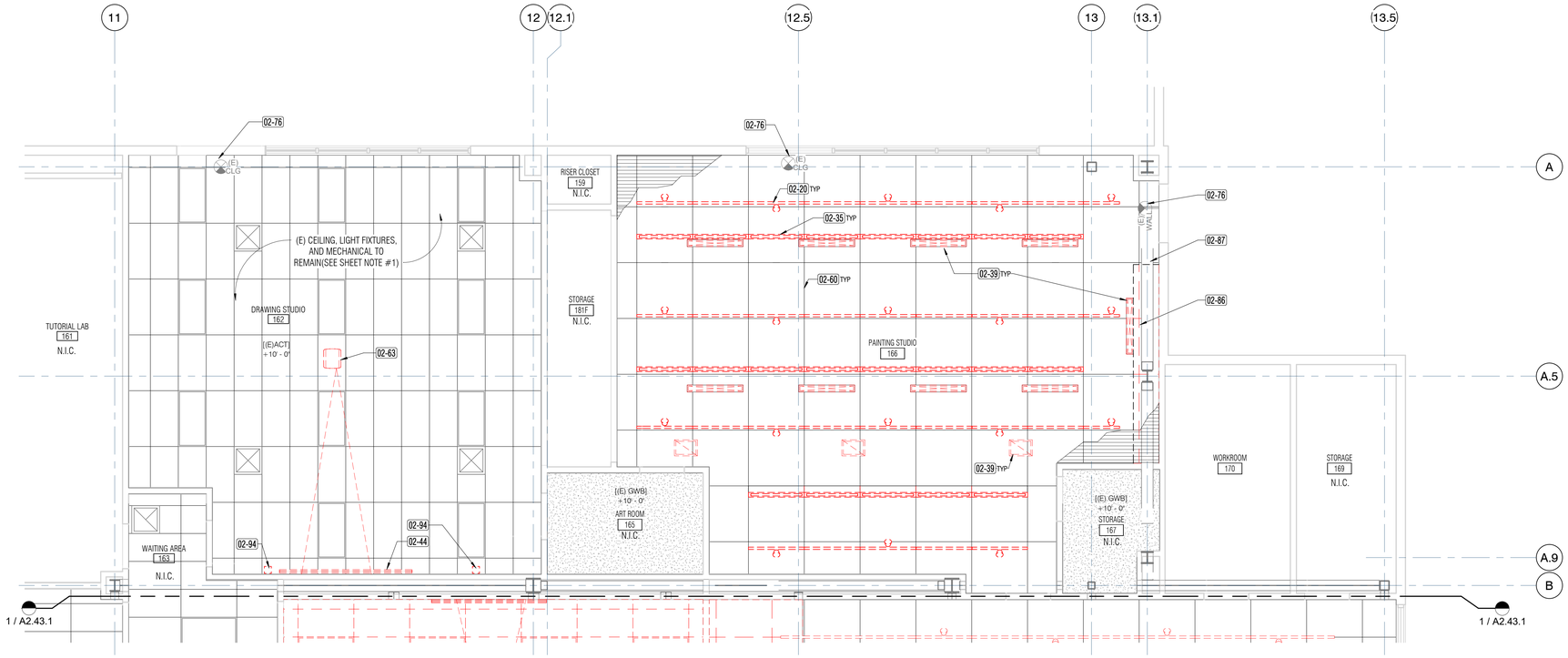

1 A2.42.1 01 - CEILING PLAN (DEMO) - CLASSROOM - PAINTING STUDIO

1/4" = 1'-0"

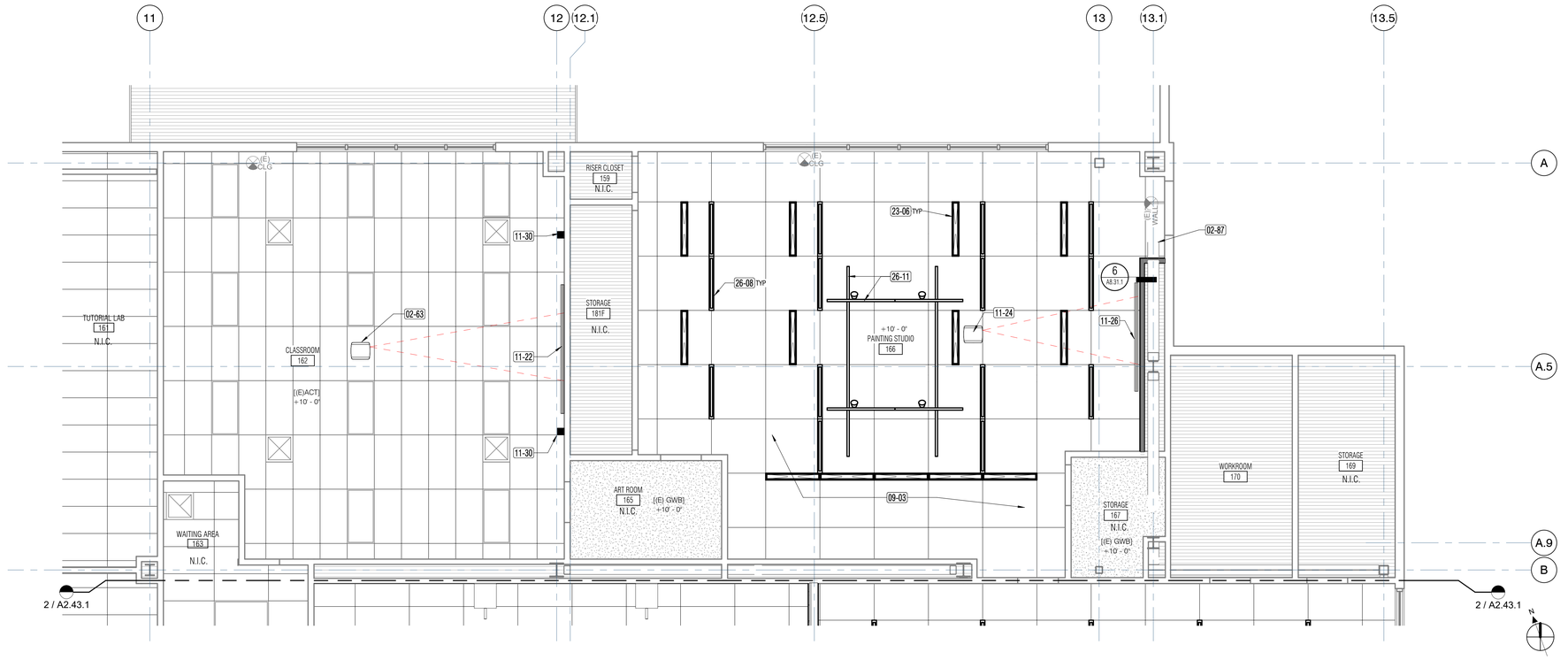

2 A2.42.1 01 - CEILING PLAN - CLASSROOM - PAINTING STUDIO

1/4" = 1'-0"

SHEET NOTES

1. SEE FLOOR PLANS, SSD, SMP, SED, SPD, SFAD, SFSD, STED FOR MORE INFORMATION @ DEMO AND NEW.
2. SEE ROOM FINISH SCHEDULE FOR ADDITIONAL INFORMATION.
3. ACOUSTIC TILE GRID SHALL BE CENTERED IN ROOM UON.
4. FOR PROJECTOR MOUNTING DETAIL SEE 6/A8.33.1. FINAL LOCATION OF PROJECTORS TO BE COORDINATED WITH OWNER.
5. ALTERATIONS TO CEILINGS NOTED AS EXISTING TO REMAIN: IF THE GRID AREA CUT OR ALTERED EXCEEDS 10% OF THE ENTIRE CEILING AREA, THE ENTIRE CEILING IN THE AFFECTED SPACE SHALL BE UPGRADED TO MEET ALL BRACING & SUPPORT REQUIREMENTS FOR NEW CEILINGS. SEE SHEET A8.3.1.1

Key Value	Keynote Text
02-20	REMOVE EXISTING TRACK AND ACCENT LIGHT FIXTURE MOUNTED TO UNDERSIDE OF EXISTING CEILING GRID
02-35	REMOVE EXISTING LIGHT FIXTURES (RECESSED, PENDANTS, ETC) SED
02-39	REMOVE EXISTING MECHANICAL DIFFUSER, REGISTER, OR GRILLE, SMD
02-44	REMOVE AND SALVAGE EXISTING PROJECTION SCREEN FOR RELOCATION
02-60	EXISTING 48"X48" OPEN CEILING GRID SYSTEM TO REMAIN, PROTECT IN PLACE. EXPOSED METAL DECK (OPEN TO STRUCTURE ABOVE THE GRID)
02-63	EXISTING OVERHEAD PROJECTOR TO REMAIN. ROTATE IN PLACE AS SHOWN IN (N) RCP
02-76	EXISTING EXIT SIGN TO REMAIN
02-86	REMOVE PORTION OF (E) SUSPENDED OPEN-GRID SYSTEM AS REQUIRED FOR NEW PARTITION. MODIFY PERIMETER CONDITION AS REQUIRED.
02-87	EXISTING STRUCTURAL STEEL BRACE FRAME
02-94	(E) AV SPEAKERS TO BE SALVAGED AND RELOCATED, STED AND NEW RCP
09-03	NEW 4X4 PANELS MOUNTED INTO EXISTING 4X4 ACOUSTICAL CEILING GRID (CEILING ABOVE). SED FOR CEILING MOUNTED DEVICES. PROVIDE PENETRATIONS FOR NEW AND EXISTING CEILING DEVICES
11-22	RE-INSTALL (E) PROJECTOR SCREEN @ NEW LOCATION IN SAME ROOM
11-24	RE-INSTALL (E) PROJECTOR MOUNT FROM ROOM 229. PROJECTOR FROM ROOM 229 TO BE RE-INSTALLED BY OWNER.
11-26	RE-INSTALL (E) MANUAL PROJECTOR SCREEN FROM ROOM 232.
11-30	REINSTALL (E) AV SPEAKER. PROVIDE BACKING AS REQUIRED. STED FOR MORE INFORMATION
23-06	NEW MECHANICAL DIFFUSER, REGISTER, OR GRILLE (SMD)
26-08	NEW LIGHT FIXTURES (PENDANT, RECESSED,ETC) SED
26-11	14' FIXED TRACKS AND 10' SLIDING TRACKS WITH SCISSOR LIGHT SUSPENSION AND LED FIXTURES, SED. SEE DET. 5/A8.31.1

RCP LEGEND

(SYMBOLS SHOWN - NOT ALL WILL BE USED ON PLAN
SMD, SED, SPD FOR ADDITIONAL LEGEND INFORMATION)

- (N) PARTITION
- (E) PARTITION TO REMAIN, OUTSIDE AREA OF WORK
- (E) PARTITION TO BE REMOVED
- (E) 24"x48" ACT SUSPENDED GRID CEILING TO REMAIN
- (E) 24"x48" CEILING PANELS AND SUPPORT GRID TO BE REMOVED
- (N) 24 x 48 ACT, SEE FINISH SCHEDULE
- (N) 48 X 48 ACT IN (E) GRID, SEE FINISH SCHEDULE
- (E) CEILING TILES TO BE CUT TO SIZE OR REPLACED AS REQUIRED. REUSE (E) CEILING GRID, MODIFY AS REQUIRED.
- (E) GYP BD CEILING TO REMAIN
- (E) GYP BD CEILING TO BE REMOVED
- (N) GB-1 GYPSUM BOARD - SUSPENDED UON
- (E) EXPOSED METAL DECK
- (E) CEMENT PLASTER SOFFIT WITH VENT
- (E) ILLUMINATED EXIT SIGN TO BE REMOVED
- (N) ILLUMINATED EXIT SIGN - CEILING OR WALL MOUNTED (WALL)
- (E) MECHANICAL DIFFUSER TO BE REMOVED, SMD
- (E) MECHANICAL DIFFUSER TO REMAIN, SMD
- (N) MECHANICAL DIFFUSER, SMD
- (E) LIGHT FIXTURE TO REMAIN, SED
- (E) LIGHT FIXTURE TO BE REMOVED, SED
- (N) LIGHT FIXTURE, SED

NOLL & TAM ARCHITECTS
729 Heinz Avenue
Berkeley, CA 94710
tel 510.542.2200
fax 510.542.2201

ARCHITECTS SEAL

LICENSED ARCHITECT
CHRISTOPHER NOLL
No. C15916
REN. 12-31-21
STATE OF CALIFORNIA

APPROVALS

FILE NUMBER: 07-C1

DIVISION OF THE STATE ARCHITECT
APP# 01-117630
ACS_____FLS_____SSS_____
Date:

PROJECT TITLE

CONTRA COSTA CCD
D-4002
DVC SAN RAMON CAMPUS EXPANSION & RENOVATION

1690 Watermill Rd.
San Ramon, CA 94582

ISSUE TITLE
INCREMENT 1 - RENOVATION

ISSUE DATE	4/26/19
NOLL & TAM JOB NUMBER	21630

REVISIONS

	DATE	DESCRIPTION

SHEET TITLE
DEMO & NEW RCP - 1ST FLOOR - EAST - CLASSROM - PAINTING STUDIO

SHEET NUMBER
A2.42.1

10/11/2021 2:35:18 PM C:\Users\phan.dung\Documents\Revit Locals\DVCSR Expansion_Central 2020_phan.dung@nollandtam.com.rvt

SHEET NOTES

1. SEE FLOOR PLANS, SSD, SMP, SED, SPD, SFAD, SFSD, STED FOR MORE INFORMATION @ DEMO AND NEW.
2. SEE ROOM FINISH SCHEDULE FOR ADDITIONAL INFORMATION.
3. ACOUSTIC TILE GRID SHALL BE CENTERED IN ROOM UON.
4. FOR PROJECTOR MOUNTING DETAIL SEE 6/A8.33.1. FINAL LOCATION OF PROJECTORS TO BE COORDINATED WITH OWNER.
5. ALTERATIONS TO CEILINGS NOTED AS EXISTING TO REMAIN: IF THE GRID AREA CUT OR ALTERED EXCEEDS 10% OF THE ENTIRE CEILING AREA, THE ENTIRE CEILING IN THE AFFECTED SPACE SHALL BE UPGRADED TO MEET ALL BRACING & SUPPORT REQUIREMENTS FOR NEW CEILINGS. SEE SHEET A8.3.1.1

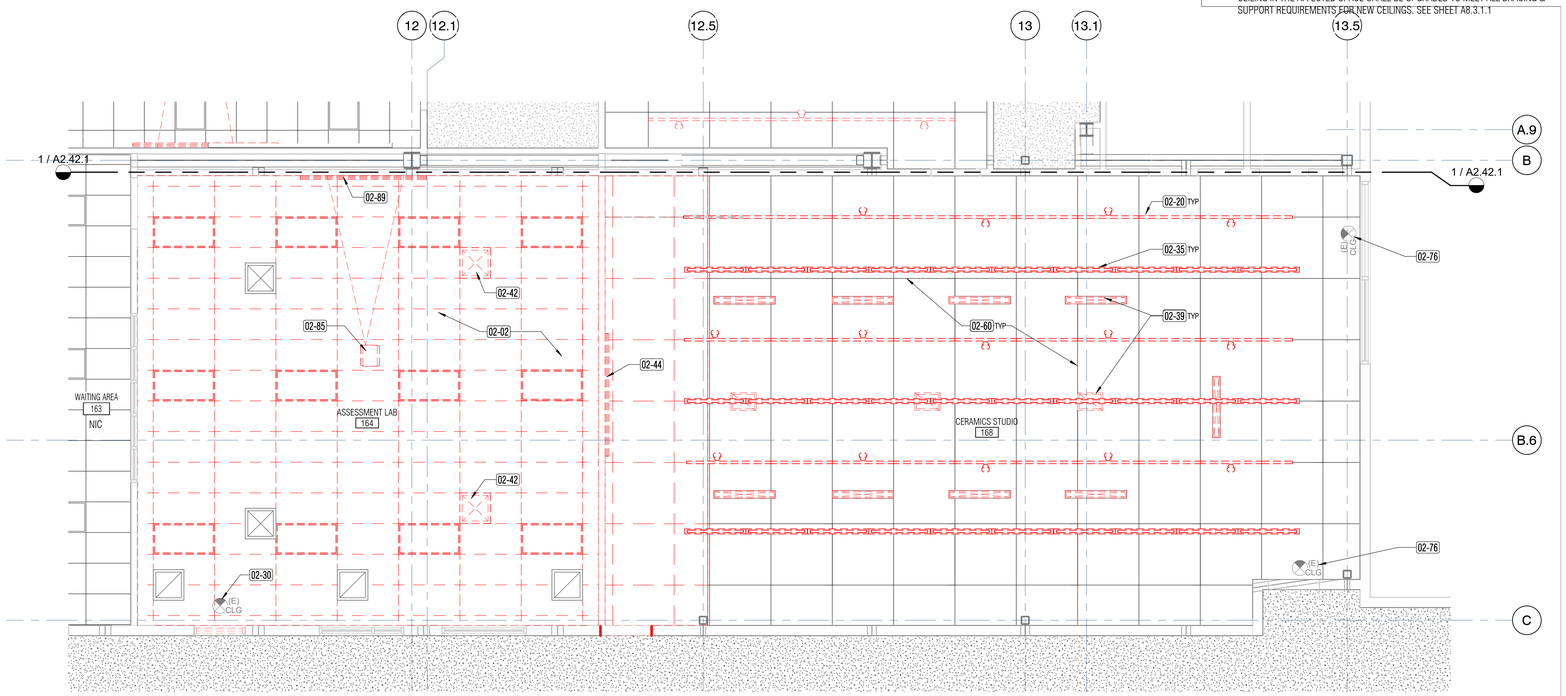

1 A2.43.1 **01 - CEILING PLAN (DEMO) - CLASSROOM - CERAMIC STUDIO**
1/4" = 1'-0"

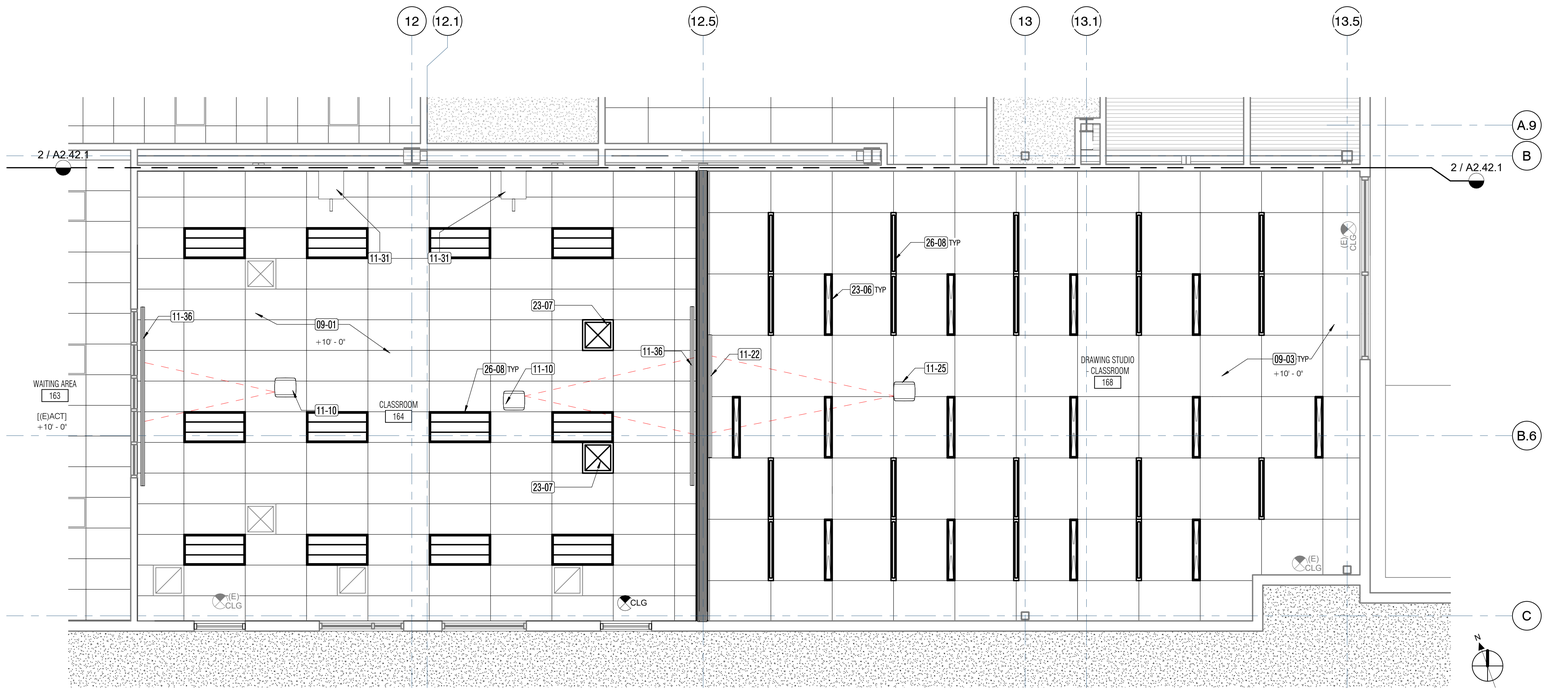

2 A2.43.1 **01 - CEILING PLAN - CLASSROOM - DRAWING STUDIO**
1/4" = 1'-0"

0' 2' 4' 8'

KEY NOTES

Key Value	Keynote Text
02-02	REMOVE EXISTING ACOUSTICAL CEILING SYSTEM- GRID AND PANELS, INCLUDING LIGHT FIXTURES. SED
02-20	REMOVE EXISTING TRACK AND ACCENT LIGHT FIXTURE MOUNTED TO UNDERSIDE OF EXISTING CEILING GRID
02-30	REMOVE EXISTING EXIT SIGN, SALVAGE & REINSTALL. SEE RCP FOR LOCATION.
02-35	REMOVE EXISTING LIGHT FIXTURES (RECESSED, PENDANTS, ETC) SED
02-39	REMOVE EXISTING MECHANICAL DIFFUSER, REGISTER, OR GRILLE, SMD
02-42	RELOCATE EXISTING MECHANICAL REGISTER, SEE (N) RCP & SMD
02-44	REMOVE AND SALVAGE EXISTING PROJECTION SCREEN FOR RELOCATION
02-60	EXISTING 48"X48" OPEN CEILING GRID SYSTEM TO REMAIN, PROTECT IN PLACE. EXPOSED METAL DECK (OPEN TO STRUCTURE ABOVE THE GRID)
02-76	EXISTING EXIT SIGN TO REMAIN
02-85	REMOVE (E) PROJECTOR & MOUNT. SALVAGE FOR RELOCATION.
02-89	REMOVE & SALVAGE (E) PROJECTOR SCREEN FOR RE-USE OR STORAGE. COORDINATE WITH OWNER.
09-01	NEW 2X4 ACOUSTICAL CEILING SYSTEM, SEE FINISH SCHEDULE
09-03	NEW 4X4 PANELS MOUNTED INTO EXISTING 4X4 ACOUSTICAL CEILING GRID (CEILING ABOVE). SED FOR CEILING MOUNTED DEVICES. PROVIDE PENETRATIONS FOR NEW AND EXISTING CEILING DEVICES
11-10	NEW OVERHEAD PROJECTOR MOUNT - PROJECTOR (OFOI), SED FOR ELECTRICAL REQUIREMENTS
11-22	RE-INSTALL (E) PROJECTOR SCREEN @ NEW LOCATION IN SAME ROOM
11-25	RE-INSTALL (E) PROJECTOR MOUNT FROM ROOM 232. PROJECTOR FROM ROOM 232 TO BE RE-INSTALLED BY OWNER.
11-31	(N) SHORT-THROW PROJECTOR & MOUNT, OFCI, STED FOR MORE INFORMATION.
11-36	NEW RECESSED MOTORIZED PROJECTOR SCREEN
23-06	NEW MECHANICAL DIFFUSER, REGISTER, OR GRILLE (SMD)
23-07	RE-INSTALL (E) MECHANICAL DIFFUSER, REGISTER, OR GRILLE IN NEW LOCATION (SMD)
26-08	NEW LIGHT FIXTURES (PENDANT, RECESSED,ETC) SED

RCP LEGEND

(SYMBOLS SHOWN - NOT ALL WILL BE USED ON PLAN
SMD, SED, SPD FOR ADDITIONAL LEGEND INFORMATION)

- (N) PARTITION
- (E) PARTITION TO REMAIN, OUTSIDE AREA OF WORK
- (E) PARTITION TO BE REMOVED
- (E) 24"x48" ACT SUSPENDED GRID CEILING TO REMAIN
- (E) 24"x48" CEILING PANELS AND SUPPORT GRID TO BE REMOVED
- (N) 24 x 48 ACT, SEE FINISH SCHEDULE
- (N) 48 X 48 ACT IN (E) GRID, SEE FINISH SCHEDULE
- (E) CEILING TILES TO BE CUT TO SIZE OR REPLACED AS REQUIRED. REUSE (E) CEILING GRID, MODIFY AS REQUIRED.
- (E) GYP BD CEILING TO REMAIN
- (E) GYP BD CEILING TO BE REMOVED
- (N) GB-1 GYPSUM BOARD - SUSPENDED UON
- (E) EXPOSED METAL DECK
- (E) CEMENT PLASTER SOFFIT WITH VENT
- (E) ILLUMINATED EXIT SIGN TO BE REMOVED
- (N) ILLUMINATED EXIT SIGN - CEILING OR WALL MOUNTED (WALL)
- (E) MECHANICAL DIFFUSER TO BE REMOVED, SMD
- (E) MECHANICAL DIFFUSER TO REMAIN, SMD
- (N) MECHANICAL DIFFUSER, SMD
- (E) LIGHT FIXTURE TO REMAIN, SED
- (E) LIGHT FIXTURE TO BE REMOVED, SED
- (N) LIGHT FIXTURE, SED

NOLL & TAM ARCHITECTS
729 Heinz Avenue
Berkeley, CA 94710
tel 510.542.2200
fax 510.542.2201

ARCHITECTS SEAL

LICENSED ARCHITECT
CHRISTOPHER NOLL
No. C15916
REN. 12-31-21
STATE OF CALIFORNIA

APPROVALS
FILE NUMBER: 07-C1
DIVISION OF THE STATE ARCHITECT
APP# 01-117630
ACS_____FLS_____SSS_____
Date:

PROJECT TITLE
CONTRA COSTA CCD
D-4002
DVC SAN RAMON CAMPUS EXPANSION & RENOVATION
1690 Watermill Rd.
San Ramon, CA 94582

ISSUE TITLE
INCREMENT 1 - RENOVATION

ISSUE DATE 4/26/19
NOLL & TAM JOB NUMBER 21630
REVISIONS | DATE | DESCRIPTION

SHEET TITLE
DEMO & NEW RCP - 1ST FLOOR - EAST - CLASSROOM 164 - DRAWING STUDIO

SHEET NUMBER
A2.43.1

10/11/2021 2:35:22 PM C:\Users\phan.dung\Documents\Revit Locals\DVCSR Expansion_Central 2020_phan.dung@nollandtam.com.rvt

RCP LEGEND

(SYMBOLS SHOWN - NOT ALL WILL BE USED ON PLAN SMD, SED, SPD FOR ADDITIONAL LEGEND INFORMATION)

- (N) PARTITION TO REMAIN, WITHIN AREA OF WORK
- (E) PARTITION TO REMAIN, OUTSIDE AREA OF WORK
- (E) PARTITION TO BE REMOVED
- (E) 24"x48" ACT SUSPENDED GRID CEILING TO REMAIN
- (E) 24"x48" CEILING PANELS AND SUPPORT GRID TO BE REMOVED
- (N) 24 x 48 ACT, SEE FINISH SCHEDULE
- (N) 48 X 48 ACT IN (E) GRID, SEE FINISH SCHEDULE
- (E) CEILING TILES TO BE CUT TO SIZE OR REPLACED AS REQUIRED. REUSE (E) CEILING GRID, MODIFY AS REQUIRED.
- (E) GYP BD CEILING TO REMAIN
- (E) GYP BD CEILING TO BE REMOVED
- (N) GB-1 GYPSUM BOARD - SUSPENDED UON
- E) EXPOSED METAL DECK
- (E) CEMENT PLASTER SOFFIT WITH VENT
- (E) ILLUMINATED EXIT SIGN TO BE REMOVED
- (N) ILLUMINATED EXIT SIGN - CEILING OR WALL MOUNTED
- (E) MECHANICAL DIFFUSER TO BE REMOVED, SMD
- (E) MECHANICAL DIFFUSER TO REMAIN, SMD
- (N) MECHANICAL DIFFUSER, SMD
- (E) LIGHT FIXTURE TO REMAIN, SED
- (E) LIGHT FIXTURE TO BE REMOVED, SED
- (N) LIGHT FIXTURE, SED

KEY NOTES

Key Value	Keynote Text
02-02	REMOVE EXISTING ACOUSTICAL CEILING SYSTEM- GRID AND PANELS, INCLUDING LIGHT FIXTURES, SED
02-35	REMOVE EXISTING LIGHT FIXTURES (RECESSED, PENDANTS, ETC) SED
02-42	RELOCATE EXISTING MECHANICAL REGISTER, SEE (N) RCP & SMD
10-22	RE-INSTALL EXISTING CONVEX SECURITY MIRROR ON WALL. FINAL LOCATION TO BE COORDINATED WITH DVCSR
23-07	RE-INSTALL (E) MECHANICAL DIFFUSER, REGISTER, OR GRILLE IN NEW LOCATION (SMD)
26-08	NEW LIGHT FIXTURES (PENDANT, RECESSED,ETC) SED

SHEET NOTES

1. SEE FLOOR PLANS, SSD, SMP, SED, SPD, SFAD, SFSD, STED FOR MORE INFORMATION @ DEMO AND NEW.
2. SEE ROOM FINISH SCHEDULE FOR ADDITIONAL INFORMATION.
3. ACOUSTIC TILE GRID SHALL BE CENTERED IN ROOM UON.
4. FOR PROJECTOR MOUNTING DETAIL SEE 6/A8.33.1. FINAL LOCATION OF PROJECTORS TO BE COORDINATED WITH OWNER.
5. ALTERATIONS TO CEILINGS NOTED AS EXISTING TO REMAIN: IF THE GRID AREA CUT OR ALTERED EXCEEDS 10% OF THE ENTIRE CEILING AREA, THE ENTIRE CEILING IN THE AFFECTED SPACE SHALL BE UPGRADED TO MEET ALL BRACING & SUPPORT REQUIREMENTS FOR NEW CEILINGS. SEE SHEET A8.3.1.1

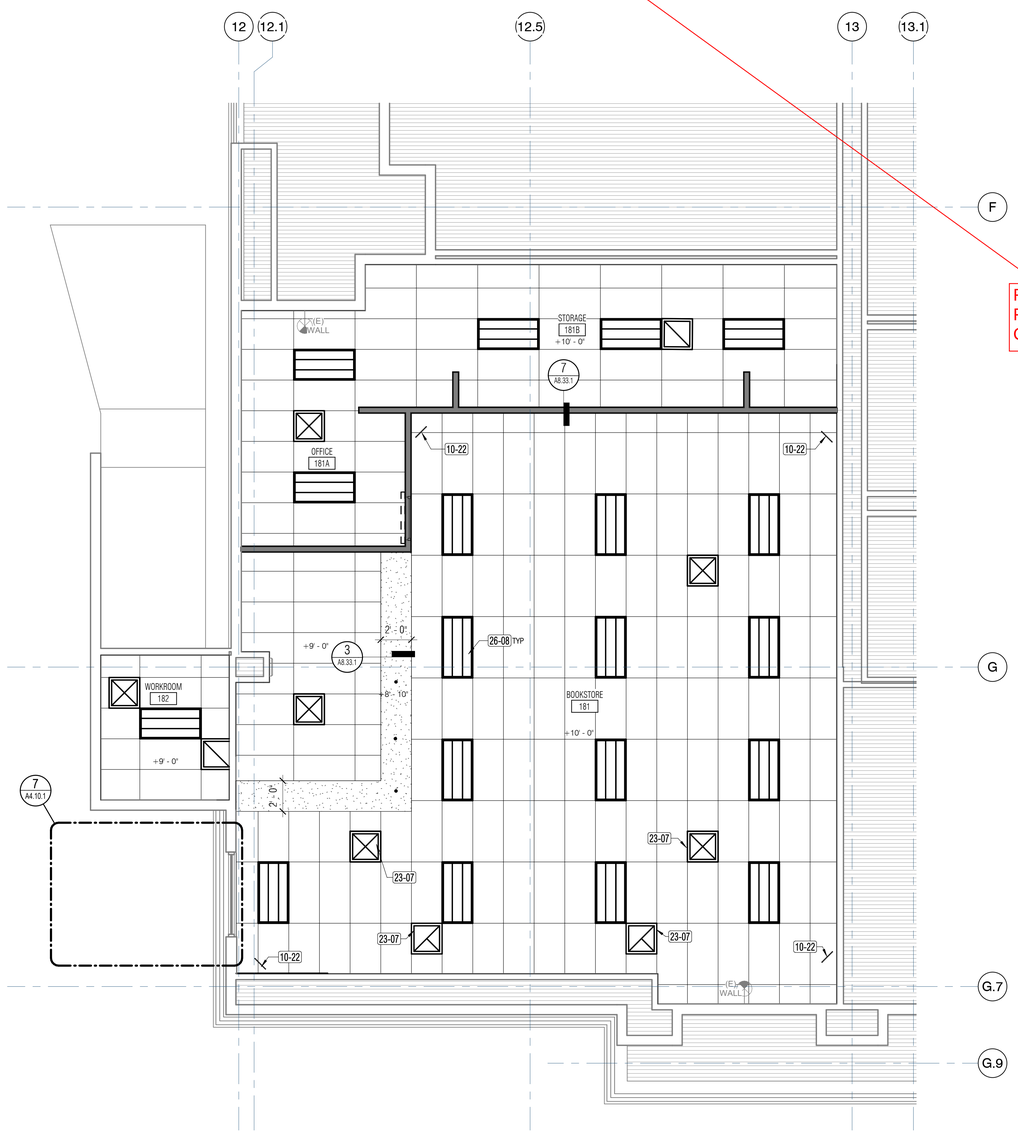

2 A2.44.1 **01 - CEILING PLAN - BOOKSTORE**
1/4" = 1'-0"

REMOVED FROM SCOPE CCDA-8

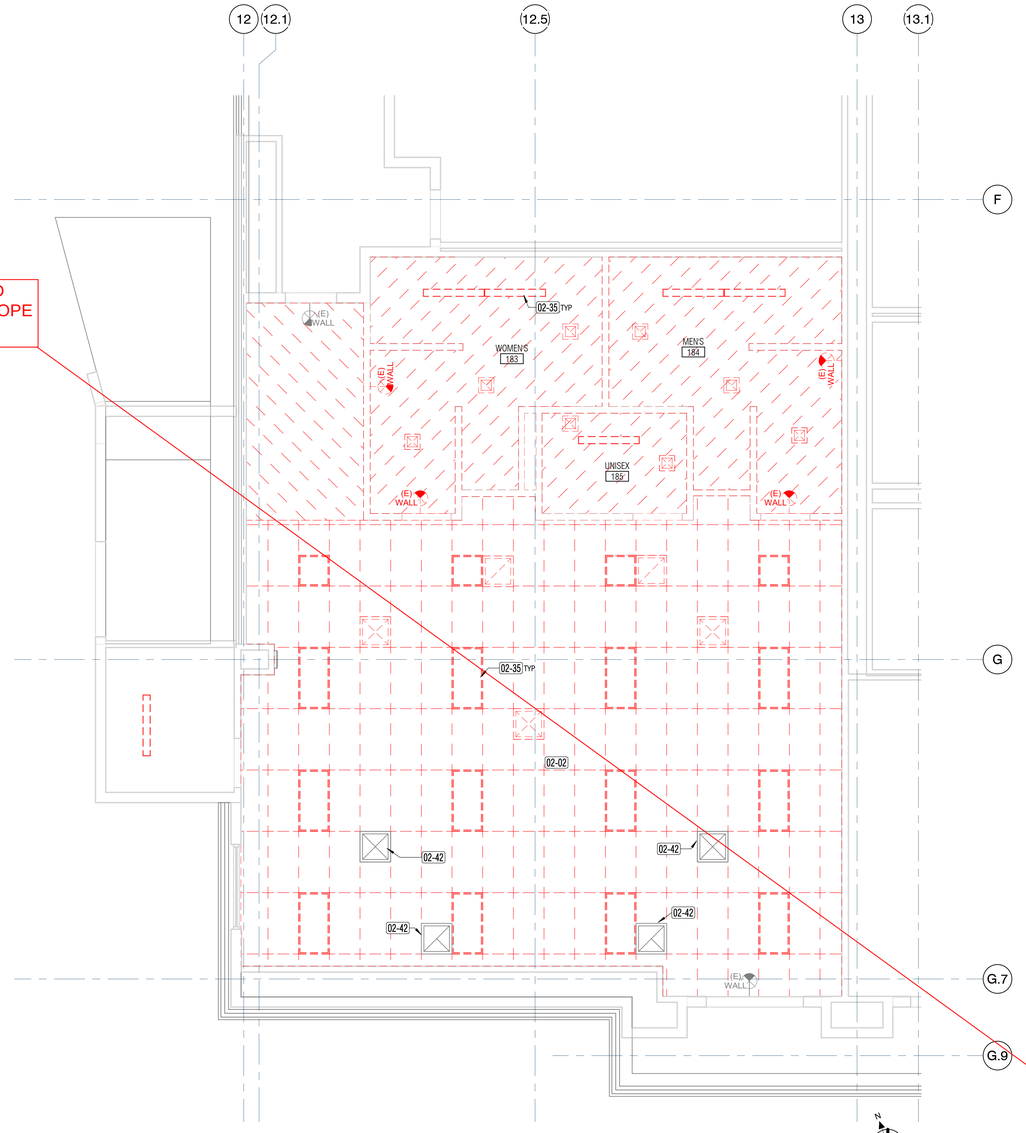

1 A2.44.1 **01 - CEILING PLAN (DEMO) - MS TUTORIAL**
1/4" = 1'-0"

0' 2' 4' 8'

NOLL & TAM ARCHITECTS
729 Heinz Avenue
Berkeley, CA 94710
tel 510.542.2200
fax 510.542.2201

ARCHITECTS SEAL

LICENSED ARCHITECT
CHRISTOPHER NOLL
No. C15916
REN. 12-31-21
STATE OF CALIFORNIA

APPROVALS
FILE NUMBER: 07-C1
DIVISION OF THE STATE ARCHITECT
APP# 01-117630
ACS_____FLS_____SSS_____
Date:

PROJECT TITLE
CONTRA COSTA CCD
D-4002
DVC SAN RAMON CAMPUS EXPANSION & RENOVATION
1690 Watermill Rd.
San Ramon, CA 94582

ISSUE TITLE
INCREMENT 1 - RENOVATION

ISSUE DATE 4/26/19
NOLL & TAM JOB NUMBER 21630
REVISIONS | DATE | DESCRIPTION

SHEET TITLE
DEMO & NEW RCP - 1ST FLOOR - EAST - BOOKSTORE

SHEET NUMBER
A2.44.1

10/11/2021 2:35:26 PM C:\Users\phan.dung\Documents\Revit Locals\DVCSR Expansion_Central 2020_phan.dung@nollandtam.com.rvt

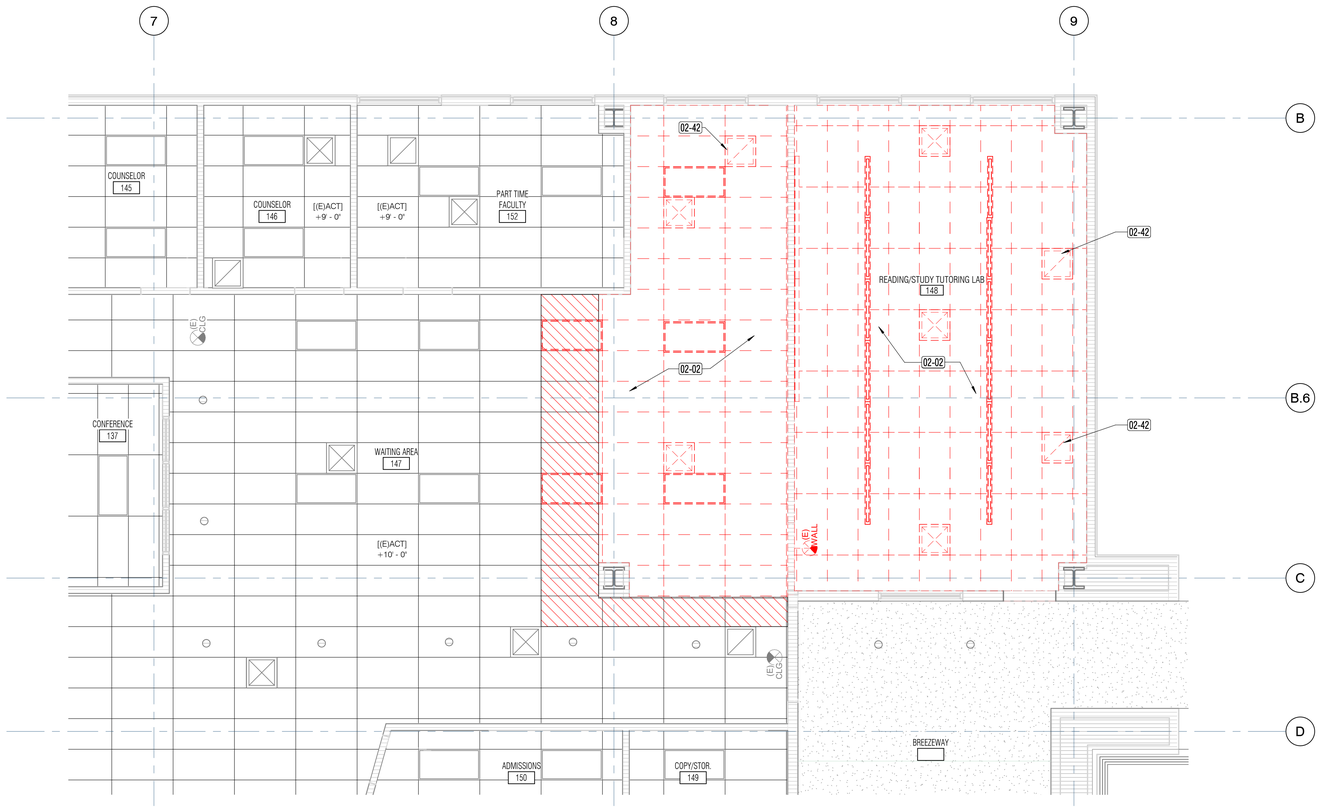

1 A2.45.1 **01 - CEILING PLAN (DEMO) WAITING AREA - WRITING TUTORIAL**
1/4" = 1'-0"

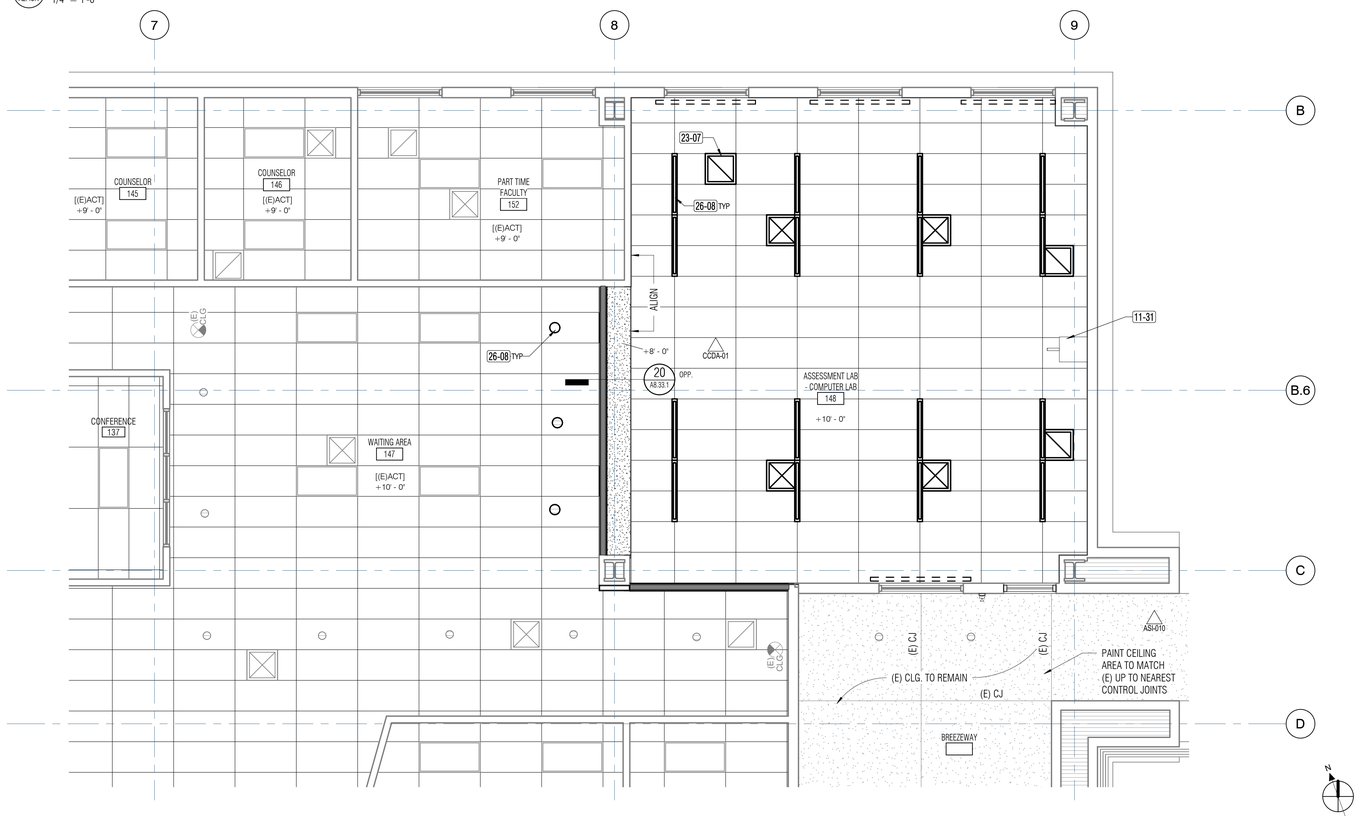

2 A2.45.1 **01 - CEILING PLAN - ASSESSMENT LAB**
1/4" = 1'-0"

SHEET NOTES

1. SEE FLOOR PLANS, SSD, SMP, SED, SPD, SFAD, SFSD, STED FOR MORE INFORMATION @ DEMO AND NEW.
2. SEE ROOM FINISH SCHEDULE FOR ADDITIONAL INFORMATION.
3. ACOUSTIC TILE GRID SHALL BE CENTERED IN ROOM UON.
4. FOR PROJECTOR MOUNTING DETAIL SEE 6/A8.33.1. FINAL LOCATION OF PROJECTORS TO BE COORDINATED WITH OWNER.
5. ALTERATIONS TO CEILINGS NOTED AS EXISTING TO REMAIN: IF THE GRID AREA CUT OR ALTERED EXCEEDS 10% OF THE ENTIRE CEILING AREA, THE ENTIRE CEILING IN THE AFFECTED SPACE SHALL BE UPGRADED TO MEET ALL BRACING & SUPPORT REQUIREMENTS FOR NEW CEILINGS. SEE SHEET A8.3.1.1

KEY NOTES

Key Value	Keynote Text
02-02	REMOVE EXISTING ACOUSTICAL CEILING SYSTEM- GRID AND PANELS, INCLUDING LIGHT FIXTURES. SED
02-42	RELOCATE EXISTING MECHANICAL REGISTER, SEE (N) RCP & SMD
11-31	(N) SHORT-THROW PROJECTOR & MOUNT, OFCI, STED FOR MORE INFORMATION.
23-07	RE-INSTALL (E) MECHANICAL DIFFUSER, REGISTER, OR GRILLE IN NEW LOCATION (SMD)
26-08	NEW LIGHT FIXTURES (PENDANT, RECESSED,ETC) SED

RCP LEGEND

(SYMBOLS SHOWN - NOT ALL WILL BE USED ON PLAN
SMD, SED, SPD FOR ADDITIONAL LEGEND INFORMATION)

- (N) PARTITION
- (E) PARTITION TO REMAIN, OUTSIDE AREA OF WORK
- (E) PARTITION TO BE REMOVED
- (E) 24"x48" ACT SUSPENDED GRID CEILING TO REMAIN
- (E) 24"x48" CEILING PANELS AND SUPPORT GRID TO BE REMOVED
- (N) 24 x 48 ACT, SEE FINISH SCHEDULE
- (N) 48 X 48 ACT IN (E) GRID, SEE FINISH SCHEDULE
- (E) CEILING TILES TO BE CUT TO SIZE OR REPLACED AS REQUIRED. REUSE (E) CEILING GRID, MODIFY AS REQUIRED.
- (E) GYP BD CEILING TO REMAIN
- (E) GYP BD CEILING TO BE REMOVED
- (N) GB-1 GYPSUM BOARD - SUSPENDED UON
- (E) EXPOSED METAL DECK
- (E) CEMENT PLASTER SOFFIT WITH VENT
- (E) ILLUMINATED EXIT SIGN TO BE REMOVED
- (N) ILLUMINATED EXIT SIGN - CEILING OR WALL MOUNTED (WALL)
- (E) MECHANICAL DIFFUSER TO BE REMOVED, SMD
- (E) MECHANICAL DIFFUSER TO REMAIN, SMD
- (N) MECHANICAL DIFFUSER, SMD
- (E) LIGHT FIXTURE TO REMAIN, SED
- (E) LIGHT FIXTURE TO BE REMOVED, SED
- (N) LIGHT FIXTURE, SED

NOLL & TAM ARCHITECTS
729 Heinz Avenue
Berkeley, CA 94710
tel 510.542.2200
fax 510.542.2201

ARCHITECTS SEAL

LICENSED ARCHITECT
CHRISTOPHER NOLL
No. C15916
REN. 12-31-21
STATE OF CALIFORNIA

APPROVALS
FILE NUMBER: 07-C1
DIVISION OF THE STATE ARCHITECT
APP# 01-117630
ACS_____FLS_____SSS_____
Date:

PROJECT TITLE
CONTRA COSTA CCD
D-4002
DVC SAN RAMON CAMPUS EXPANSION & RENOVATION
1690 Watermill Rd.
San Ramon, CA 94582

ISSUE TITLE
INCREMENT 1 - RENOVATION

ISSUE DATE 4/26/19
NOLL & TAM JOB NUMBER 21630

REVISIONS

	DATE	DESCRIPTION
1	3/25/2019	INC1 RFI20
2	6/21/19	ASI 010

SHEET TITLE
DEMO & NEW RCP - 1ST FLOOR - WEST - ASSESSMENT LAB

SHEET NUMBER
A2.45.1

10/11/2021 2:35:30 PM C:\Users\phan.dung\Documents\Revit Locals\DVCSR Expansion_Central 2020_phan.dung@nollandtam.com.rvt

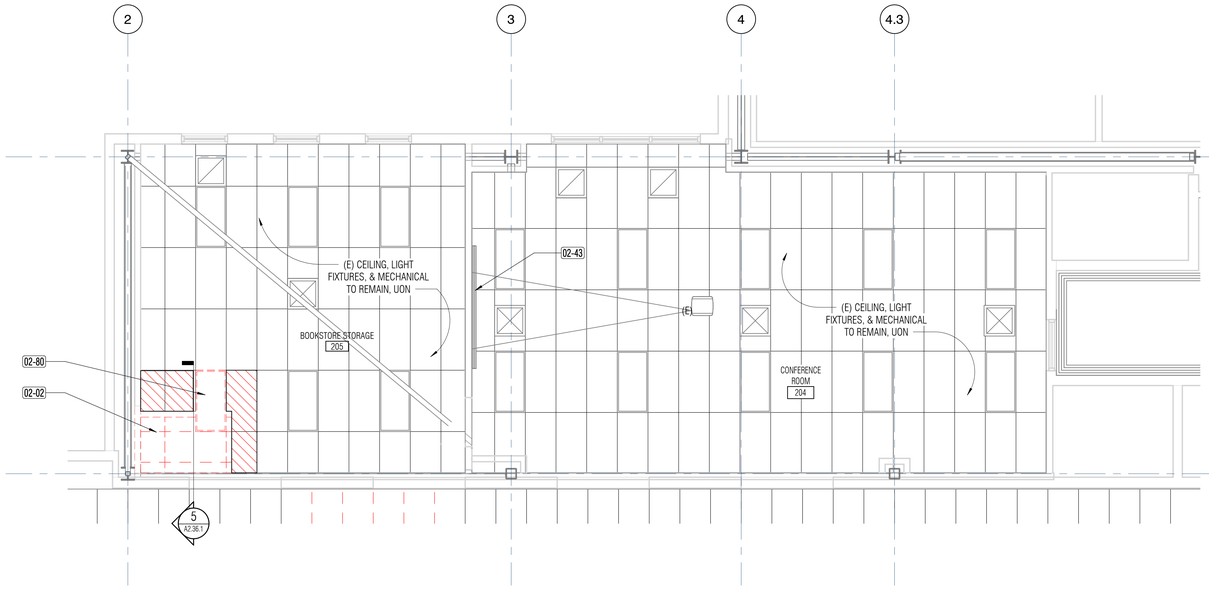

1 A2.46.1 **02 - CEILING PLAN (DEMO) - STORAGE & CONFERENCE ROOM**
1/4" = 1'-0"

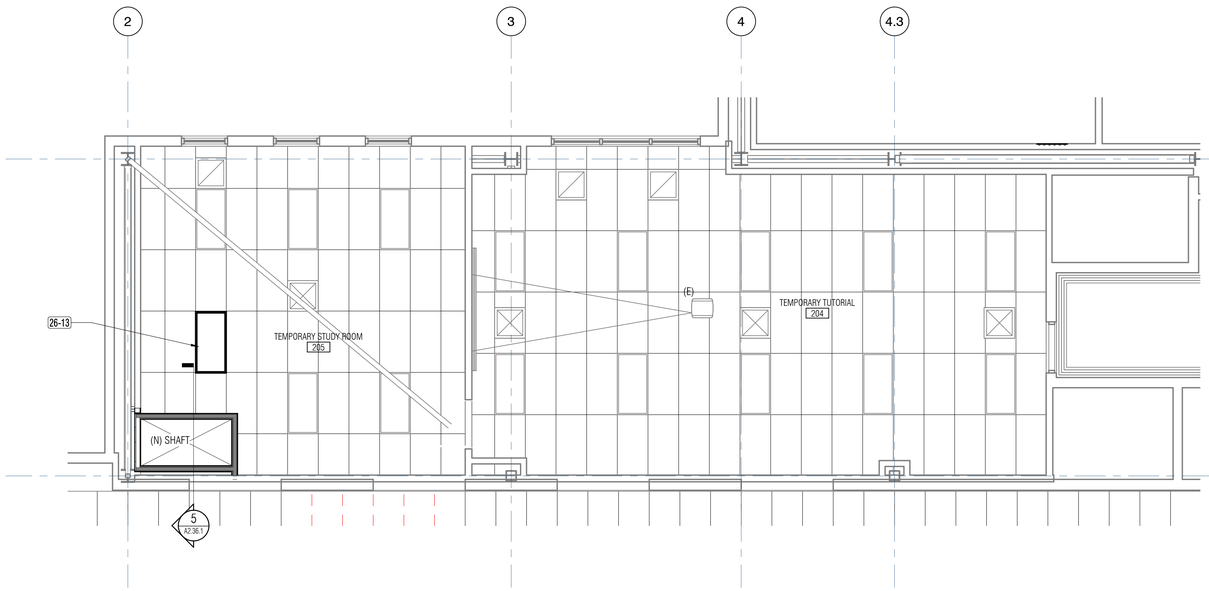

2 A2.46.1 **02 - CEILING PLAN - TEMPORARY TUTORIAL & STUDY ROOM**
1/4" = 1'-0"

0' 2' 4' 8'

SHEET NOTES

1. SEE FLOOR PLANS, SSD, SMP, SED, SPD, SFAD, SFSD, STED FOR MORE INFORMATION @ DEMO AND NEW.
2. SEE ROOM FINISH SCHEDULE FOR ADDITIONAL INFORMATION.
3. ACOUSTIC TILE GRID SHALL BE CENTERED IN ROOM UON.
4. FOR PROJECTOR MOUNTING DETAIL SEE 6/A8.33.1. FINAL LOCATION OF PROJECTORS TO BE COORDINATED WITH OWNER.
5. ALTERATIONS TO CEILINGS NOTED AS EXISTING TO REMAIN: IF THE GRID AREA CUT OR ALTERED EXCEEDS 10% OF THE ENTIRE CEILING AREA, THE ENTIRE CEILING IN THE AFFECTED SPACE SHALL BE UPGRADED TO MEET ALL BRACING & SUPPORT REQUIREMENTS FOR NEW CEILINGS. SEE SHEET A8.3.1.1

KEY NOTES

Key Value	Keynote Text
02-02	REMOVE EXISTING ACOUSTICAL CEILING SYSTEM- GRID AND PANELS, INCLUDING LIGHT FIXTURES. SED
02-43	EXISTING PROJECTOR SCREEN TO REMAIN
02-80	REMOVE AND SALVAGE (E) LIGHT POLE FOR RE-INSTALLATION. SEE SITE PLAN FOR NEW LOCATION. SED AND SLD
26-13	RELOCATED LIGHT FIXTURE, SEE DEMO RCP & SED

RCP LEGEND

(SYMBOLS SHOWN - NOT ALL WILL BE USED ON PLAN
SMD, SED, SPD FOR ADDITIONAL LEGEND INFORMATION)

- (N) PARTITION
- (E) PARTITION TO REMAIN, OUTSIDE AREA OF WORK
- (E) PARTITION TO BE REMOVED
- (E) 24"x48" ACT SUSPENDED GRID CEILING TO REMAIN
- (E) 24"x48" CEILING PANELS AND SUPPORT GRID TO BE REMOVED
- (N) 24 x 48 ACT, SEE FINISH SCHEDULE
- (N) 48 X 48 ACT IN (E) GRID, SEE FINISH SCHEDULE
- (E) CEILING TILES TO BE CUT TO SIZE OR REPLACED AS REQUIRED. REUSE (E) CEILING GRID, MODIFY AS REQUIRED.
- (E) GYP BD CEILING TO REMAIN
- (E) GYP BD CEILING TO BE REMOVED
- (N) GB-1 GYPSUM BOARD - SUSPENDED UON
- (E) EXPOSED METAL DECK
- (E) CEMENT PLASTER SOFFIT WITH VENT
- (E) ILLUMINATED EXIT SIGN TO BE REMOVED
- (N) ILLUMINATED EXIT SIGN - CEILING OR WALL MOUNTED (CLG) (WALL)
- (E) MECHANICAL DIFFUSER TO BE REMOVED, SMD
- (E) MECHANICAL DIFFUSER TO REMAIN, SMD
- (N) MECHANICAL DIFFUSER, SMD
- (E) LIGHT FIXTURE TO REMAIN, SED
- (E) LIGHT FIXTURE TO BE REMOVED, SED
- (N) LIGHT FIXTURE, SED

NOLL & TAM ARCHITECTS
729 Heinz Avenue
Berkeley, CA 94710
tel 510.542.2200
fax 510.542.2201

ARCHITECTS SEAL

LICENSED ARCHITECT
CHRISTOPHER NOLL
No. C15916
REN. 12-31-21
STATE OF CALIFORNIA

APPROVALS
FILE NUMBER: 07-C1
DIVISION OF THE STATE ARCHITECT
APP# 01-117630
ACS_____FLS_____SSS_____
Date:

PROJECT TITLE
CONTRA COSTA CCD
D-4002
DVC SAN RAMON CAMPUS EXPANSION & RENOVATION
1690 Watermill Rd.
San Ramon, CA 94582

ISSUE TITLE
INCREMENT 1 - RENOVATION

ISSUE DATE	4/26/19
NOLL & TAM JOB NUMBER	21630

REVISIONS
	DATE	DESCRIPTION

SHEET TITLE
DEMO & NEW RCP - 2ND FLOOR - WEST - TEMP TUTORIAL & STUDY

SHEET NUMBER
A2.46.1

10/11/2021 2:33:35 PM C:\Users\phan.dung\Documents\Revit Locals\DVCSR Expansion_Central_2020_phan.dung@nollandtam.com.rvt

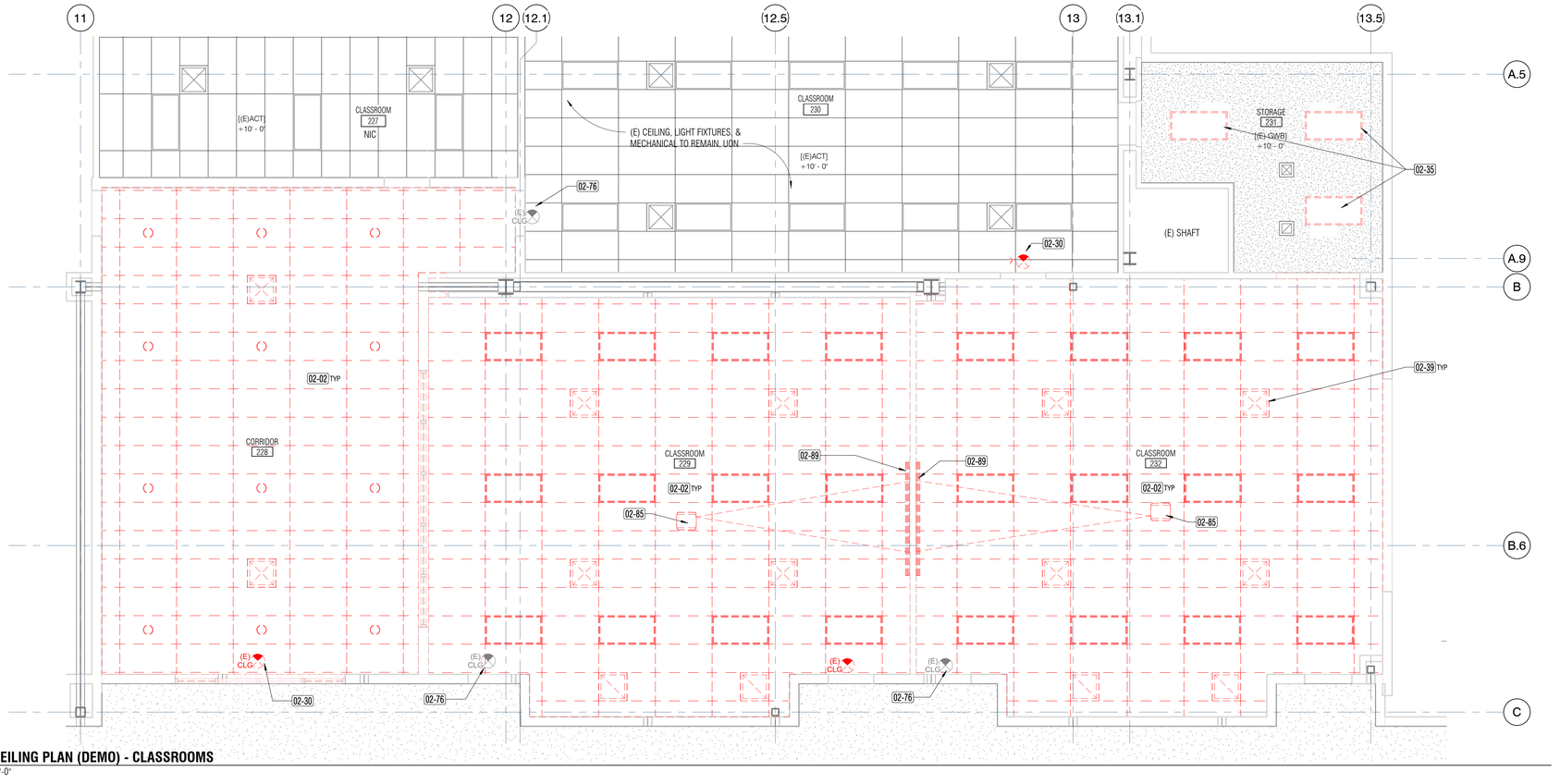

1 A2.47.1 **02 - CEILING PLAN (DEMO) - CLASSROOMS**
1/4" = 1'-0"

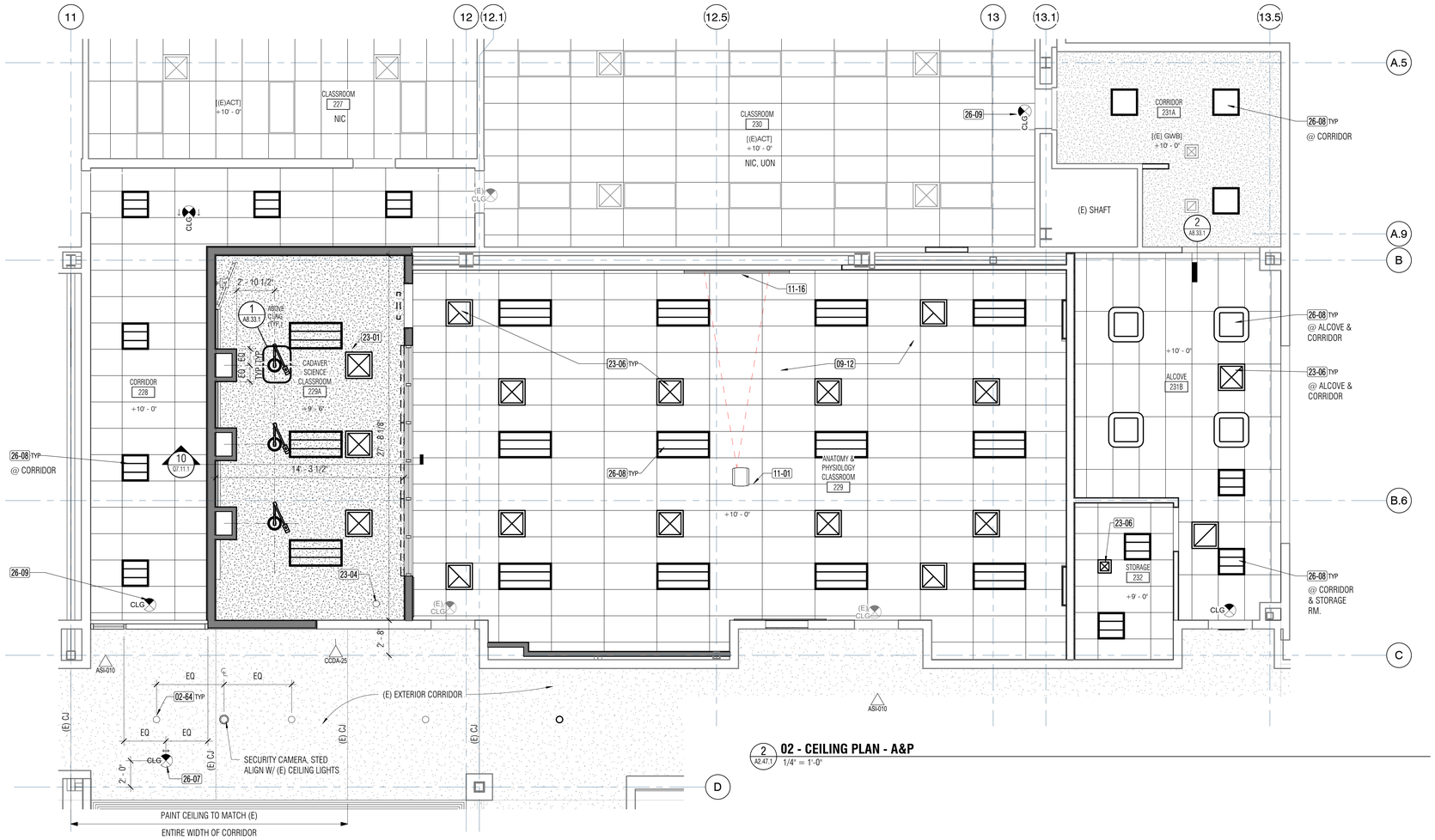

2 A2.47.1 **02 - CEILING PLAN - A&P**
1/4" = 1'-0"

SHEET NOTES

1. SEE FLOOR PLANS, SSD, SMP, SED, SPD, SFAD, SFSD, STED FOR MORE INFORMATION @ DEMO AND NEW.
2. SEE ROOM FINISH SCHEDULE FOR ADDITIONAL INFORMATION.
3. ACOUSTIC TILE GRID SHALL BE CENTERED IN ROOM UON.
4. FOR PROJECTOR MOUNTING DETAIL SEE 6/A8.33.1. FINAL LOCATION OF PROJECTORS TO BE COORDINATED WITH OWNER.
5. ALTERATIONS TO CEILINGS NOTED AS EXISTING TO REMAIN: IF THE GRID AREA CUT OR ALTERED EXCEEDS 10% OF THE ENTIRE CEILING AREA, THE ENTIRE CEILING IN THE AFFECTED SPACE SHALL BE UPGRADED TO MEET ALL BRACING & SUPPORT REQUIREMENTS FOR NEW CEILINGS. SEE SHEET A8.3.1.1

KEY NOTES

Key Value	Keynote Text
02-02	REMOVE EXISTING ACOUSTICAL CEILING SYSTEM- GRID AND PANELS, INCLUDING LIGHT FIXTURES. SED
02-30	REMOVE EXISTING EXIT SIGN, SALVAGE & REINSTALL. SEE RCP FOR LOCATION.
02-35	REMOVE EXISTING LIGHT FIXTURES (RECESSED, PENDANTS, ETC) SED
02-39	REMOVE EXISTING MECHANICAL DIFFUSER, REGISTER, OR GRILLE, SMD
02-64	EXISTING LIGHT FIXTURE TO REMAIN
02-76	EXISTING EXIT SIGN TO REMAIN
02-85	REMOVE (E) PROJECTOR & MOUNT. SALVAGE FOR RELOCATION.
02-89	REMOVE & SALVAGE (E) PROJECTOR SCREEN FOR RE-USE OR STORAGE. COORDINATE WITH OWNER.
09-12	NEW CLEANABLE - NON-ABSORBENT CEILING SYSTEM WITH 2X4 PANELS (CEILING ABOVE, SEE RCP)
11-01	NEW OVERHEAD PROJECTOR MOUNT. COORDINATE DISTANCE FROM WALL. SED, SEE TECH DWG. PROJECTOR IS OFOI.
11-16	NEW OVERHEAD MANUALLY OPERATED PROJECTOR SCREEN, OFCI
23-01	NEW OVERHEAD HVAC SUPPLY REGISTERS AT FOOT OF EACH CADAVER TABLE
23-04	NEW VENTILATED PROSECTION CABINET
23-06	NEW MECHANICAL DIFFUSER, REGISTER, OR GRILLE (SMD)
26-07	NEW EXIT SIGN, SED
26-08	NEW LIGHT FIXTURES (PENDANT, RECESSED,ETC) SED
26-09	REINSTALL SALVAGED EXIT SIGN AT INDICATED LOCATION

RCP LEGEND

(SYMBOLS SHOWN - NOT ALL WILL BE USED ON PLAN
SMD, SED, SPD FOR ADDITIONAL LEGEND INFORMATION)

- (N) PARTITION
- (E) PARTITION TO REMAIN, OUTSIDE AREA OF WORK
- (E) PARTITION TO BE REMOVED
- (E) 24"x48" ACT SUSPENDED GRID CEILING TO REMAIN
- (E) 24"x48" CEILING PANELS AND SUPPORT GRID TO BE REMOVED
- (N) 24 x 48 ACT, SEE FINISH SCHEDULE
- (N) 48 X 48 ACT IN (E) GRID, SEE FINISH SCHEDULE
- (E) CEILING TILES TO BE CUT TO SIZE OR REPLACED AS REQUIRED. REUSE (E) CEILING GRID, MODIFY AS REQUIRED.
- (E) GYP BD CEILING TO REMAIN
- (E) GYP BD CEILING TO BE REMOVED
- (N) GB-1 GYPSUM BOARD - SUSPENDED UON
- (E) EXPOSED METAL DECK
- (E) CEMENT PLASTER SOFFIT WITH VENT
- (E) ILLUMINATED EXIT SIGN TO BE REMOVED
- (N) ILLUMINATED EXIT SIGN - CEILING OR WALL MOUNTED (WALL) CLG
- (E) MECHANICAL DIFFUSER TO BE REMOVED, SMD
- (E) MECHANICAL DIFFUSER TO REMAIN, SMD
- (N) MECHANICAL DIFFUSER, SMD
- (E) LIGHT FIXTURE TO REMAIN, SED
- (E) LIGHT FIXTURE TO BE REMOVED, SED
- (N) LIGHT FIXTURE, SED

NOLL & TAM ARCHITECTS
729 Heinz Avenue
Berkeley, CA 94710
tel 510.542.2200
fax 510.542.2201

ARCHITECTS SEAL

LICENSED ARCHITECT
CHRISTOPHER NOLL
No. C15916
REN. 12-31-21
STATE OF CALIFORNIA

APPROVALS

FILE NUMBER: 07-C1

DIVISION OF THE STATE ARCHITECT
APP# 01-117630
ACS_____FLS_____SSS_____
Date:

PROJECT TITLE

CONTRA COSTA CCD
D-4002
DVC SAN RAMON CAMPUS EXPANSION & RENOVATION

1690 Watermill Rd.
San Ramon, CA 94582

ISSUE TITLE
INCREMENT 1 - RENOVATION

ISSUE DATE	4/26/19
NOLL & TAM JOB NUMBER	21630

REVISIONS

	DATE	DESCRIPTION
1	6/21/19	ASI 010
2	12/17/19	INC 1 RFI221

SHEET TITLE
DEMO & NEW RCP - 2ND FLOOR - EAST - A&P CLASSROOM

SHEET NUMBER
A2.47.1

10/11/2021 2:35:40 PM C:\Users\phan.dung\Documents\Revit Locals\DVCSR Expansion_Central 2020_phan.dung@nollandtam.com.rvt

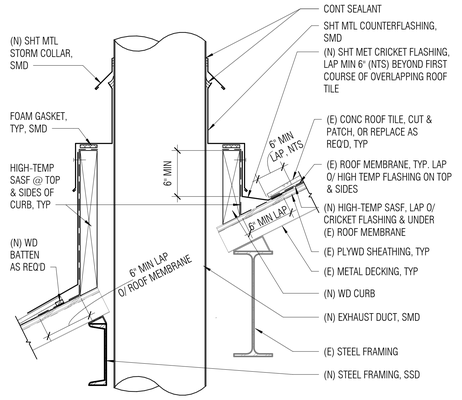

2 A2.57.1 **FLASHING @ (N) ROOF EXHAUST**
1 1/2" = 1'-0"

KEY NOTES

Key Value	Keynote Text
02-66	EXISTING ROOF SCUTTLE
02-67	EXISTING ROOF VENT, VIF LOCATION
23-05	NEW EXHAUST ROOF VENT, SMD

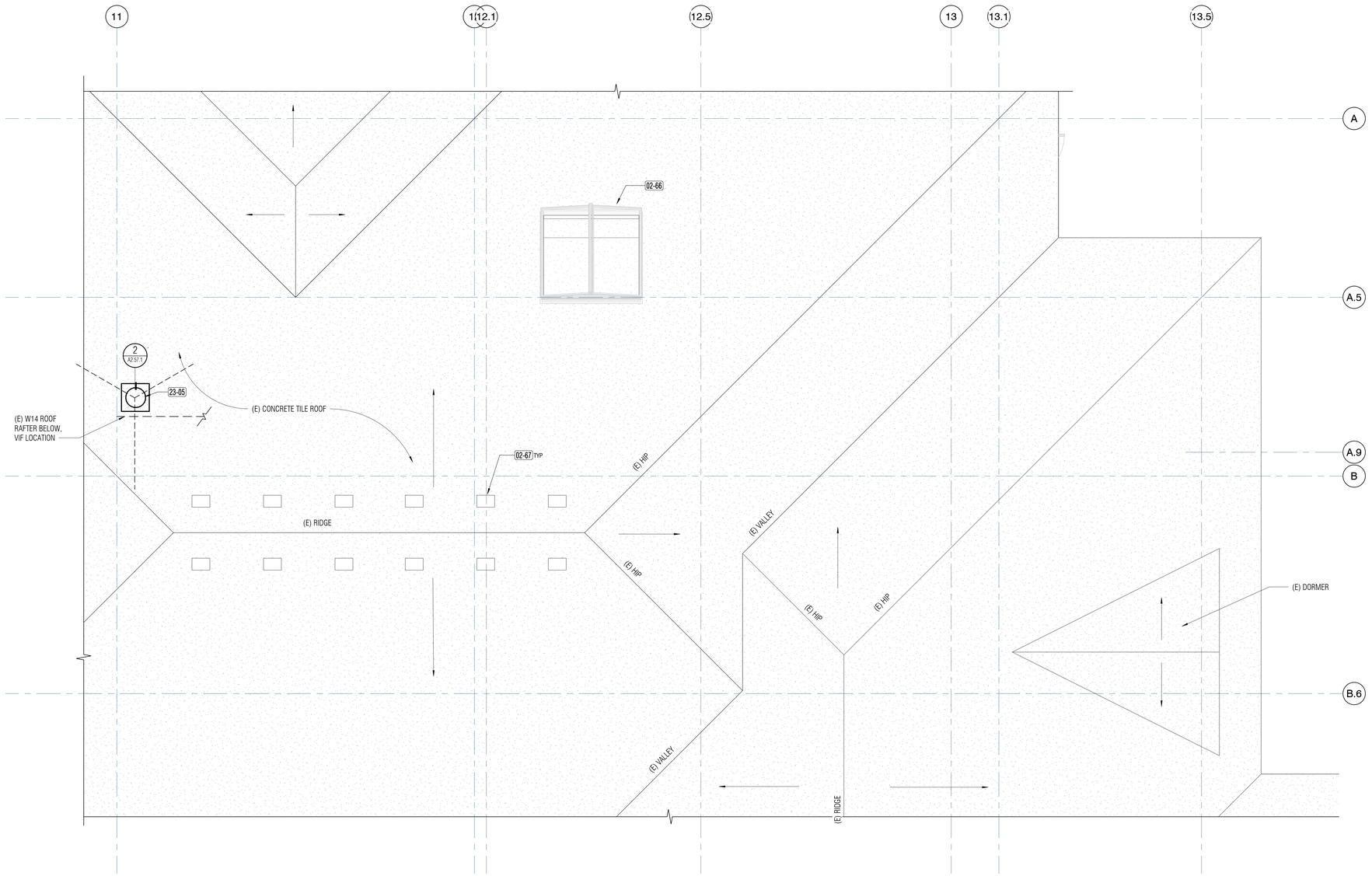

1 A2.57.1 **PARTIAL ROOF PLAN - EAST - A&P LAB**
1/4" = 1'-0"

NOLL & TAM ARCHITECTS
729 Heinz Avenue
Berkeley, CA 94710
tel 510.542.2200
fax 510.542.2201

ARCHITECTS SEAL

LICENSED ARCHITECT
CHRISTOPHER NOLL
No. C15916
REN. 12-31-21
STATE OF CALIFORNIA

APPROVALS

FILE NUMBER: 07-C1

DIVISION OF THE STATE ARCHITECT
APP# 01-117630
ACS_____FLS_____SSS_____
Date:

PROJECT TITLE

CONTRA COSTA CCD
D-4002
DVC SAN RAMON CAMPUS EXPANSION & RENOVATION

1690 Watermill Rd.
San Ramon, CA 94582

ISSUE TITLE
INCREMENT 1 - RENOVATION

ISSUE DATE 4/26/19
NOLL & TAM JOB NUMBER 21630

REVISIONS
△ | DATE | DESCRIPTION

SHEET TITLE
ROOF PLAN - EAST - A&P CLASSROOM

SHEET NUMBER
A2.57.1

10/11/2021 2:35:45 PM C:\Users\phan.dung\Documents\Revit Locals\DVCSR Expansion_Central 2020_phan.dung@nollandtam.com.rvt

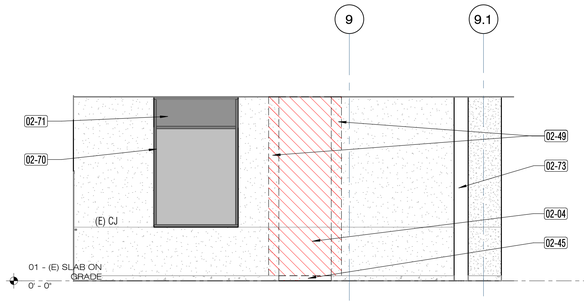

5 A3.11.1 **DEMOLITION ELEVATION @ ASSESSMENT LAB**
1/4" = 1'-0"

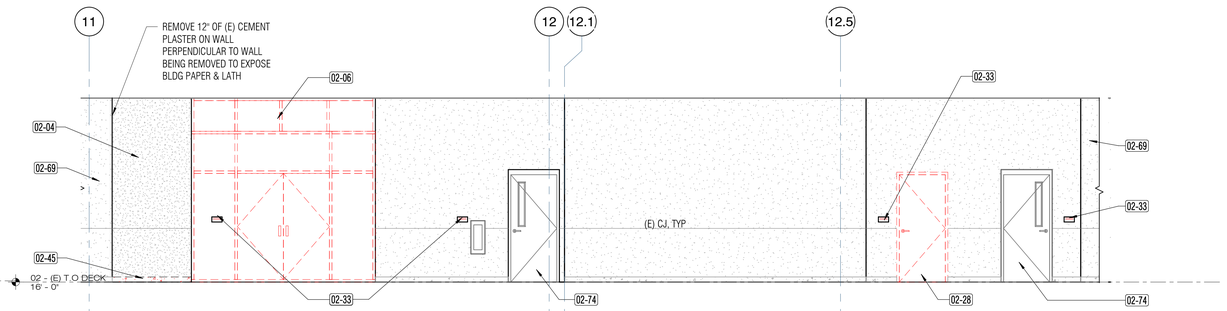

1 A3.11.1 **EXTERIOR DEMOLITION ELEVATION @ A&P**
1/4" = 1'-0"

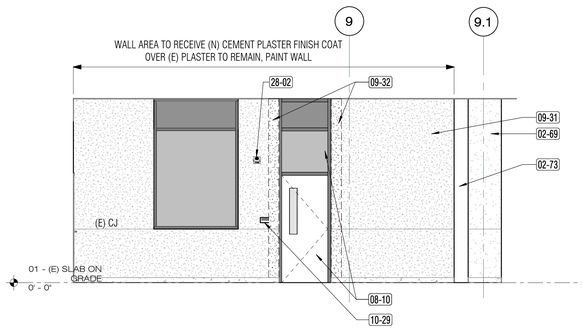

6 A3.11.1 **ELEVATION @ (N) ASSESSMENT LAB DOOR**
1/4" = 1'-0"

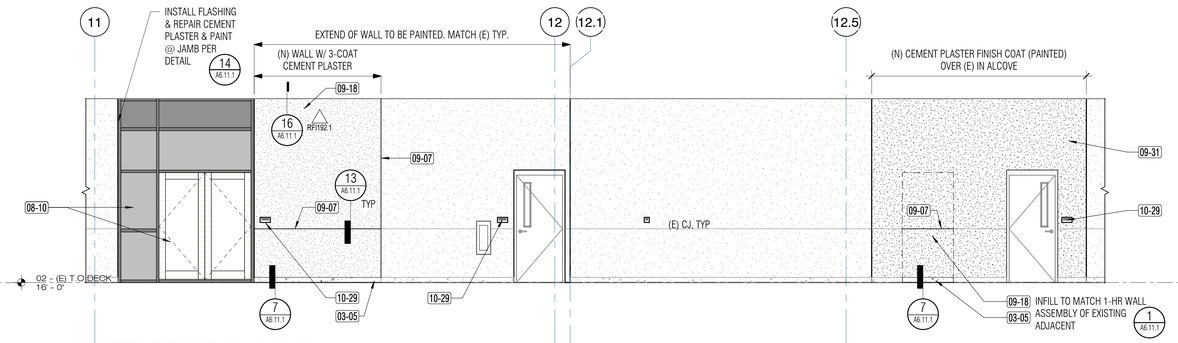

2 A3.11.1 **EXTERIOR ELEVATION @ A&P LAB**
1/4" = 1'-0"

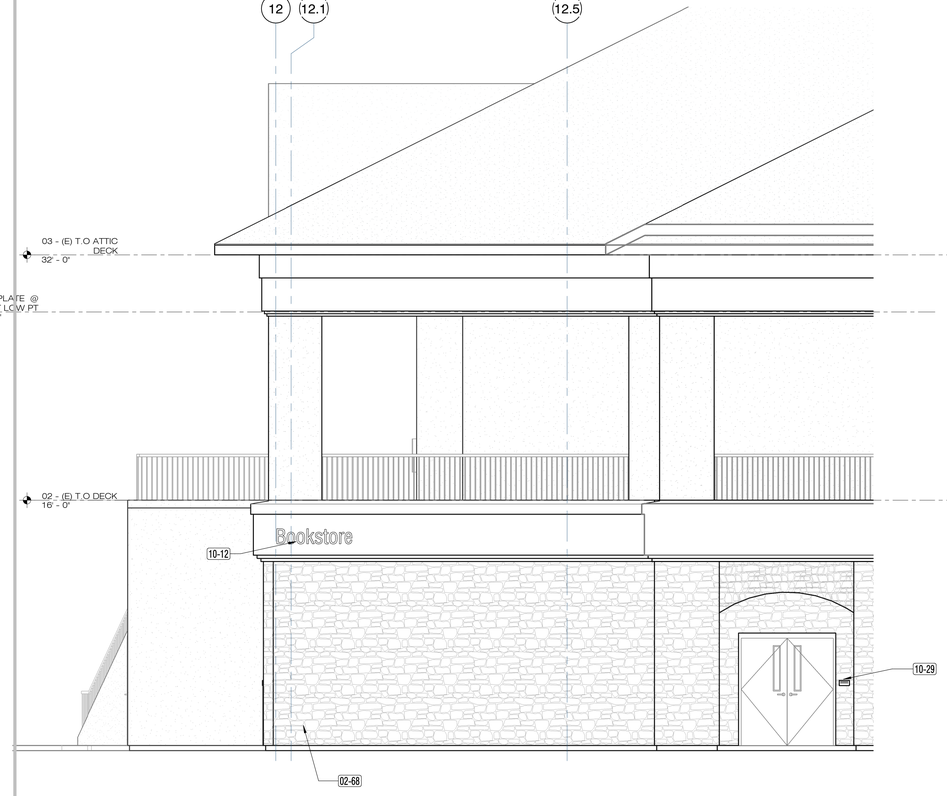

7 A3.11.1 **PARTIAL SOUTH ELEVATION - EAST BLDG @ (N) BOOKSTORE**
1/4" = 1'-0"

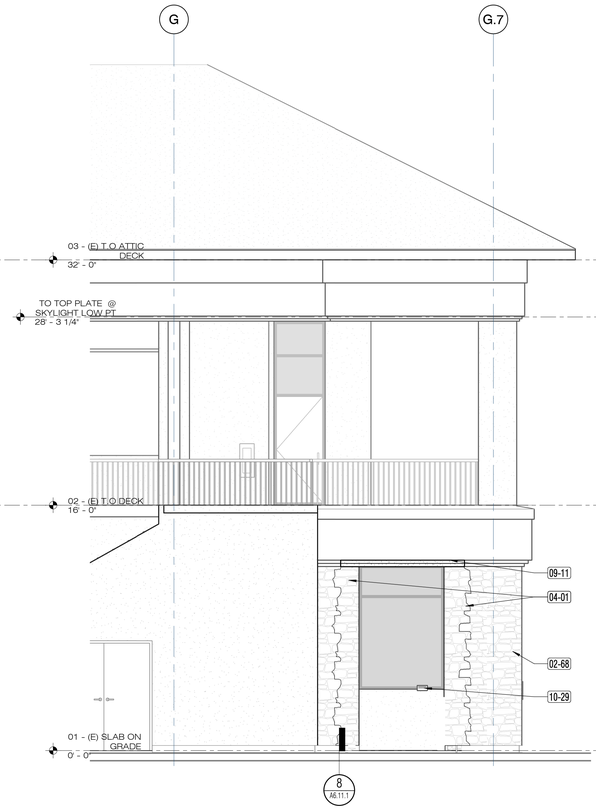

4 A3.11.1 **PARTIAL WEST ELEVATION - EAST BLDG @ (N) BOOKSTORE ENTRY**
1/4" = 1'-0"

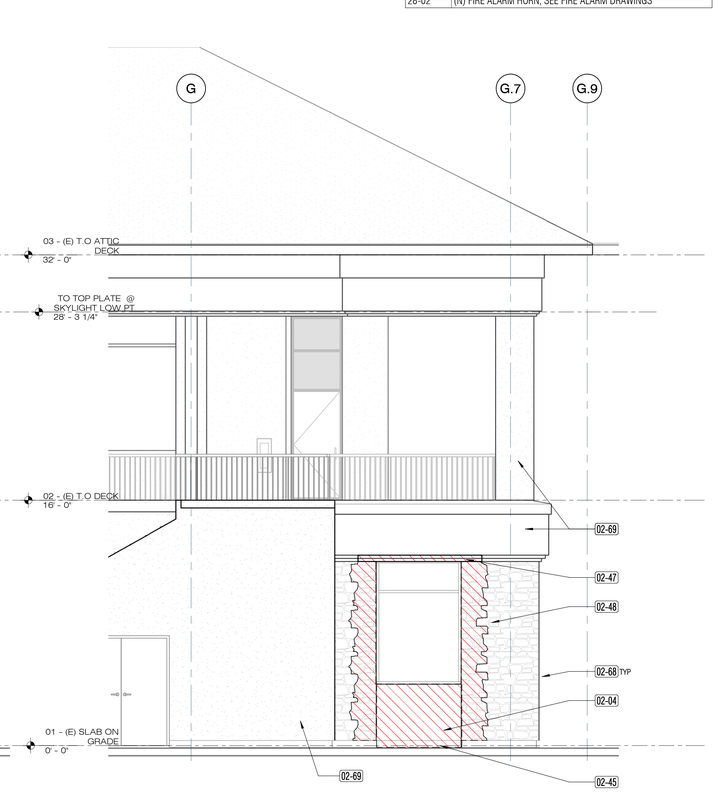

3 A3.11.1 **PARTIAL WEST DEMO ELEVATION - EAST BLDG @ (N) BOOKSTORE ENTRY**
1/4" = 1'-0"

SHEET NOTES:

1. AT NEW PENETRATIONS FOR SIGNS, SECURITY CAMERAS, FIRE DEVICES, ETC. IN EXISTING EXTERIOR WALLS, PREDRILL HOLES FOR NEW FASTENERS AND FILL WITH SEALANT PRIOR TO INSTALLING NEW ITEMS.
2. AT EXTERIOR WALLS WHERE (N) FINISH COAT IS BEING APPLIED, PREP (E) SURFACE AS REQUIRED TO CREATE SMOOTH & FLUSH TRANSITION BETWEEN (E) PLASTER AND AREAS WITH (N) PLASTER @ BOTH NEW WALLS AND AREAS BEING PATCHED FOR FLASHING.

KEYNOTES

Key Value	Keynote Text
02-04	REMOVE EXISTING EXTERIOR WALL FOR NEW OPENING. COORDINATE OPENING SIZE WITH DOOR AND/OR WINDOW SCHEDULE.
02-06	REMOVE EXISTING EXTERIOR WINDOW FOR NEW DOOR OPENING. REMOVE EXISTING CURB AS REQUIRED. COORDINATE WITH DOOR SCHEDULE.
02-28	REMOVE EXISTING DOOR AND FRAME
02-33	REMOVE EXISTING ROOM ID SIGNAGE - APPLICABLE TO ROOMS WITH CHANGED ROOM ASSIGNMENT
02-45	REMOVE EXISTING WALL CURB
02-47	REMOVE CEMENT PLASTER O/ FOAM SHAPE
02-48	REMOVE WHOLE PIECES OF EXISTING MFR. STONE VENEER MIN. 12" BEYOND EO OPENING TO ALLOW FOR INSTALLATION OF (N) FLASHING. SALVAGE STONE FOR REUSE. (E) SHEATHING & WRB TO REMAIN UON IN DETAILS.
02-49	REMOVE EXISTING CEMENT PLASTER FINISH MIN. 8" BEYOND EO OPENING TO ALLOW FOR INSTALLATION OF (N) FLASHING. (E) SHEATHING, LATH, & WRB TO REMAIN UON IN DETAILS.
02-68	EXISTING MANUFACTURED STONE VENEER TO REMAIN
02-69	EXISTING CEMENT PLASTER FINISH TO REMAIN
02-70	EXISTING STOREFRONT
02-71	EXISTING INSULATED SPANDREL GLAZING
02-73	EXISTING SEISMIC JOINT TO REMAIN
02-74	EXISTING DOOR TO REMAIN
03-05	PROVIDE NEW CONTINUOUS 6" HIGH CONCRETE CURB WITH CONTINUOUS WATERSTOP AT AREAS OF NEW EXTERIOR WALL INFILL
04-01	MANUFACTURED STONE VENEER TO MATCH EXISTING. REUSE SALVAGED PIECES WHERE POSSIBLE.
08-10	(N) STOREFRONT
09-07	(N) CONTROL JOINT
09-11	(N) CEMENT PLASTER O/ FOAM SHAPE @ AREA REMOVED FOR INSTALLATION OF NEW FLASHING. BLEND WITH NEW FINISH COAT AT ADJACENT WALL AREA. MATCH EXISTING FINISH & TEXTURE.
09-18	NEW WALL INFILL WITH CEMENT PLASTER AT EXISTING OPENING. FINISH & TEXTURE TO MATCH EXISTING. SEE 1/A6.11.1 .
09-31	NEW CEMENT PLASTER FINISH COAT TO MATCH EXISTING FINISH & TEXTURE.
09-32	NEW 3-COAT CEMENT PLASTER REPAIR @ AREA REMOVED FOR INSTALLATION OF NEW FLASHING. BLEND WITH NEW FINISH COAT AT ADJACENT WALL AREA. MATCH EXISTING FINISH & TEXTURE.
10-12	NEW EXTERIOR SIGNAGE LETTERS - 'BOOKSTORE' , AS NOTED ON ELEVATION, MOUNTED TO FACE OF CEMENT PLASTER, SEE SIGNAGE PLAN AND ASSOCIATED DETAIL
10-29	NEW SIGN AS SCHEDULED
28-02	(N) FIRE ALARM HORN, SEE FIRE ALARM DRAWINGS

NOLL & TAM ARCHITECTS
729 Heinz Avenue
Berkeley, CA 94710
tel 510.542.2200
fax 510.542.2201

ARCHITECTS SEAL

LICENSED ARCHITECT
CHRISTOPHER NOLL
No. C15916
REN. 12-31-21
STATE OF CALIFORNIA

APPROVALS
FILE NUMBER: 07-C1
DIVISION OF THE STATE ARCHITECT
APP# 01-117630
ACS_____FLS_____SSS_____
Date:

PROJECT TITLE
CONTRA COSTA CCD
D-4002
DVC SAN RAMON CAMPUS EXPANSION & RENOVATION
1690 Watermill Rd.
San Ramon, CA 94582

ISSUE TITLE
INCREMENT 1 - RENOVATION

ISSUE DATE	4/26/19
NOLL & TAM JOB NUMBER	21630

REVISIONS

	DATE	DESCRIPTION
1	11/5/19	INC'1 RFI192.1

SHEET TITLE
EXTERIOR ELEVATIONS -- DEMO & NEW

SHEET NUMBER
A3.11.1

10/11/2021 2:35:54 PM C:\Users\phan.dung\Documents\Revit Locals\DVCSR Expansion_Central 2020_phan.dung@nollandtam.com.rvt

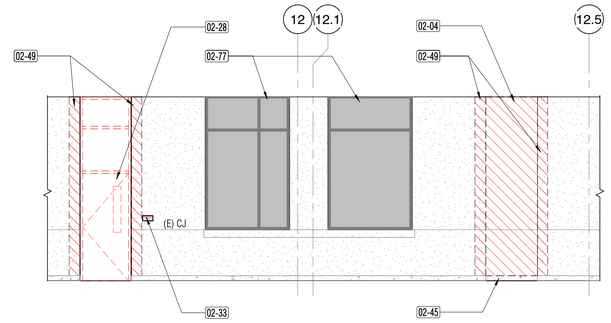

1 A3.12.1 **EXTERIOR DEMOLITION ELEVATION @ CLASSROOM 164**
1/4" = 1'-0"

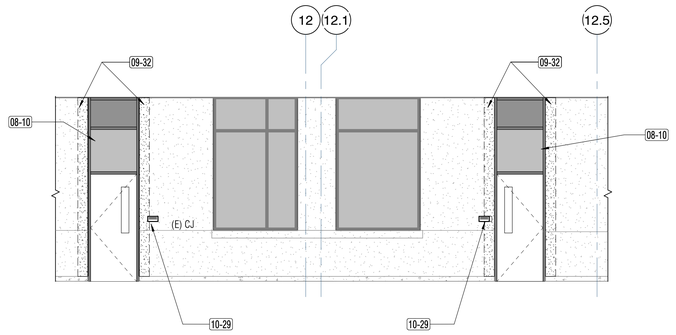

2 A3.12.1 **EXTERIOR ELEVATION @ CLASSROOM 164**
1/4" = 1'-0"

SHEET NOTES:

1. AT NEW PENETRATIONS FOR SIGNS, SECURITY CAMERAS, FIRE DEVICES, ETC. IN EXISTING EXTERIOR WALLS, PREDRILL HOLES FOR NEW FASTENERS AND FILL WITH SEALANT PRIOR TO INSTALLING NEW ITEMS.
2. AT EXTERIOR WALLS WHERE (N) FINISH COAT IS BEING APPLIED, PREP (E) SURFACE AS REQUIRED TO CREATE SMOOTH & FLUSH TRANSITION BETWEEN (E) PLASTER AND AREAS WITH (N) PLASTER @ BOTH NEW WALLS AND AREAS BEING PATCHED FOR FLASHING.

KEYNOTES

Key Value	Keynote Text
02-04	REMOVE EXISTING EXTERIOR WALL FOR NEW OPENING. COORDINATE OPENING SIZE WITH DOOR AND/OR WINDOW SCHEDULE.
02-28	REMOVE EXISTING DOOR AND FRAME
02-33	REMOVE EXISTING ROOM ID SIGNAGE - APPLICABLE TO ROOMS WITH CHANGED ROOM ASSIGNMENT
02-45	REMOVE EXISTING WALL CURB
02-49	REMOVE EXISTING CEMENT PLASTER FINISH MIN. 8" BEYOND EO OPENING TO ALLOW FOR INSTALLATION OF (N) FLASHING. (E) SHEATHING, LATH, & WRB TO REMAIN UON IN DETAILS.
02-77	EXISTING WINDOW TO REMAIN
08-10	(N) STOREFRONT
09-32	NEW 3-COAT CEMENT PLASTER REPAIR @ AREA REMOVED FOR INSTALLATION OF NEW FLASHING. BLEND WITH NEW FINISH COAT AT ADJACENT WALL AREA. MATCH EXISTING FINISH & TEXTURE.
10-29	NEW SIGN AS SCHEDULED

NOLL & TAM ARCHITECTS
729 Heinz Avenue
Berkeley, CA 94710
tel 510.542.2200
fax 510.542.2201

ARCHITECTS SEAL

LICENSED ARCHITECT
CHRISTOPHER NOLL
No. C15916
REN. 12-31-21
STATE OF CALIFORNIA

APPROVALS
FILE NUMBER: 07-C1

DIVISION OF THE STATE ARCHITECT
APP# 01-117630
ACS_____FLS_____SSS_____
Date:

PROJECT TITLE
CONTRA COSTA CCD
D-4002
DVC SAN RAMON CAMPUS EXPANSION & RENOVATION
1690 Watermill Rd.
San Ramon, CA 94582

ISSUE TITLE
INCREMENT 1 - RENOVATION

ISSUE DATE **4/26/19**
NOLL & TAM JOB NUMBER **21630**

REVISIONS
| | DATE | DESCRIPTION |

SHEET TITLE
EXTERIOR ELEVATIONS -- DEMO & NEW

SHEET NUMBER
A3.12.1

10/11/2021 2:35:57 PM C:\Users\phan.dung\Documents\Revit Locals\DVCSR Expansion_Central 2020_phan.dung@nollandtam.com.rvt

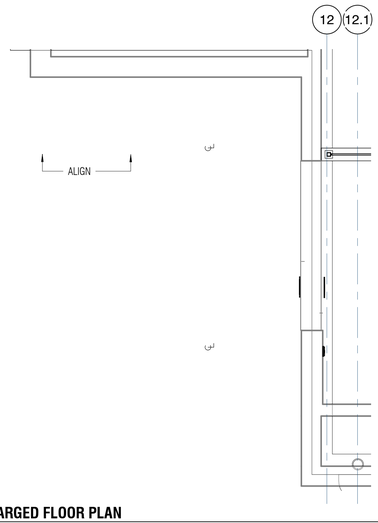

10 A4.10.1 **BOOKSTORE CANOPY - ENLARGED FLOOR PLAN**
1/2" = 1'-0"

SHEET NOTES:

1. AT NEW BOOKSTORE CANOPY, PROVIDE PAINT PT-7 OF ALL EXPOSED ITEMS SUCH AS COLUMNS, STEEL CHANNEL, GUTTER, AND DOWNSPOUT. EXTERIOR METALS SHALL BE GALVANIZED, PRE-TREATED, AND PRIMED BEFORE PAINTING

KEYNOTES

Key Value	Keynote Text

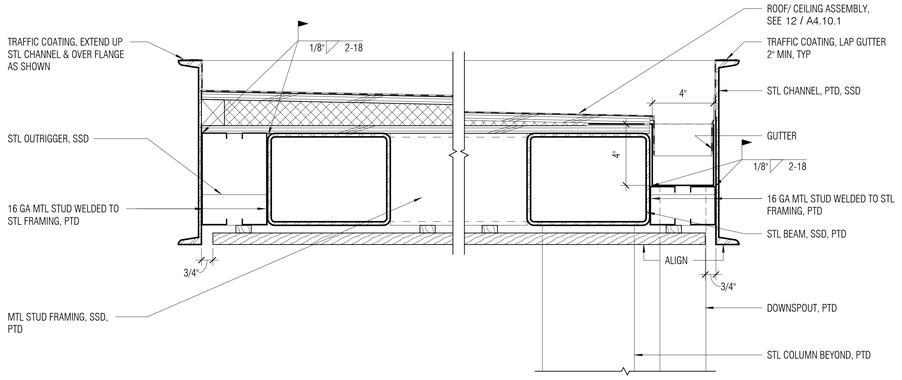

15 A4.10.1 **BOOKSTORE CANOPY SECTION DETAIL**
3" = 1'-0"

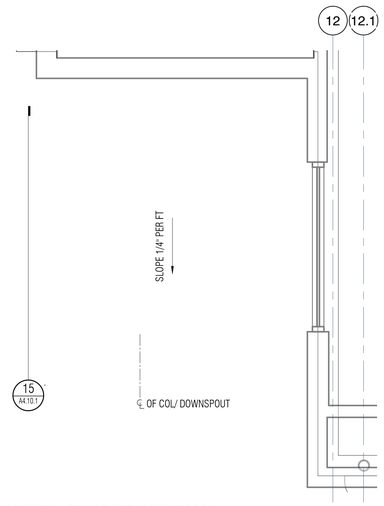

7 A4.10.1 **BOOKSTORE CANOPY - ENLARGED ROOF PLAN**
1/2" = 1'-0"

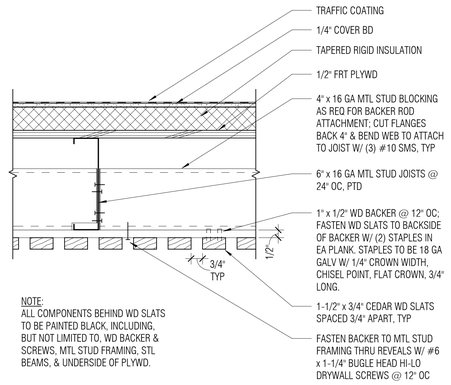

NOTE:
ALL COMPONENTS BEHIND WD SLATS TO BE PAINTED BLACK, INCLUDING, BUT NOT LIMITED TO, WD BACKER & SCREWS, MTL STUD FRAMING, STL BEAMS, & UNDERSIDE OF PLYWD.

12 A4.10.1 **BOOKSTORE CANOPY SECTION DETAIL**
3" = 1'-0"

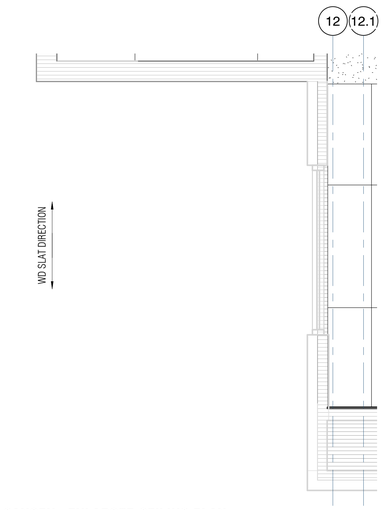

8 A4.10.1 **BOOKSTORE CANOPY - ENLARGED CEILING PLAN**
1/2" = 1'-0"

NOLL & TAM ARCHITECTS
729 Heinz Avenue
Berkeley, CA 94710
tel 510.542.2200
fax 510.542.2201

ARCHITECTS SEAL

LICENSED ARCHITECT
CHRISTOPHER NOLL
No. C15916
REN. 12-31-21
STATE OF CALIFORNIA

APPROVALS
FILE NUMBER: 07-C1
DIVISION OF THE STATE ARCHITECT
APP# 01-117630
ACS_____FLS_____SSS_____
Date:

PROJECT TITLE
CONTRA COSTA CCD
D-4002
DVC SAN RAMON CAMPUS EXPANSION & RENOVATION
1690 Watermill Rd.
San Ramon, CA 94582

ISSUE TITLE
INCREMENT 1 - RENOVATION

ISSUE DATE 4/26/19
NOLL & TAM JOB NUMBER 21630

REVISIONS

	DATE	DESCRIPTION
1	5/15/19	ASI 010

SHEET TITLE
ENLARGED PLANS & DETAILS @ BOOKSTORE CANOPY

SHEET NUMBER
A4.10.1

10/11/2021 2:36:01 PM C:\Users\phan.dung\Documents\Revit Local\DVCSR Expansion_Central 2020_phan.dung@nollandtam.com.rvt

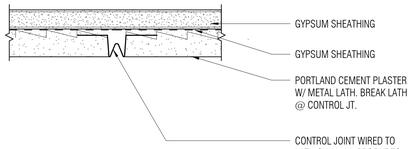

13 A6.11.1 CONTROL JT @ CEMENT PLASTER
6" = 1'-0"

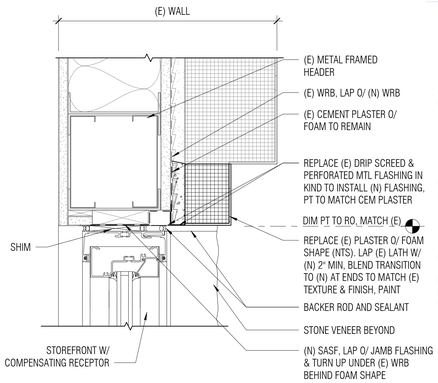

9 A6.11.1 EXTERIOR STOREFRONT HEAD @ CEMENT PLASTER
3" = 1'-0"

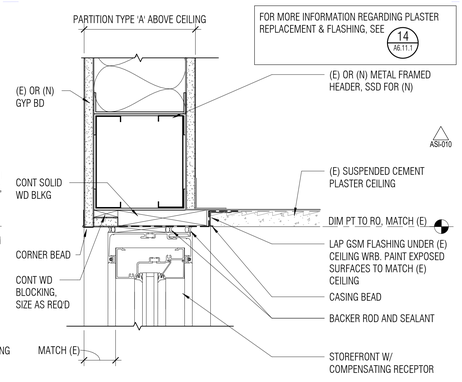

5 A6.11.1 EXT. STOREFRONT HEAD @ (N) OPENING @ CEMENT PLASTER
3" = 1'-0"

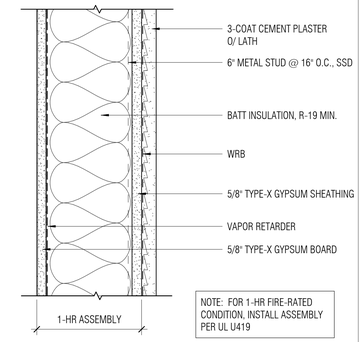

1 A6.11.1 EXTERIOR CEMENT PLASTER WALL ASSEMBLY
3" = 1'-0"

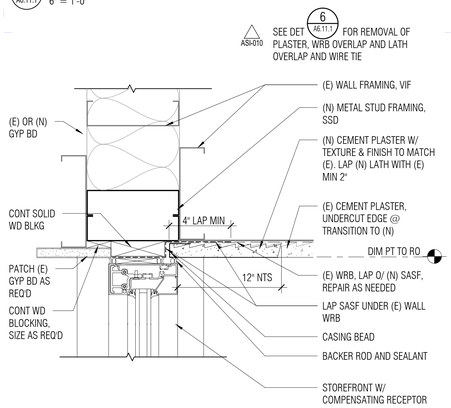

14 A6.11.1 EXT. STOREFRONT JAMB @ INSIDE CORNER
3" = 1'-0"

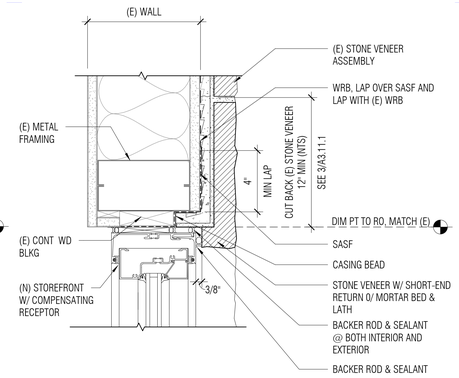

10 A6.11.1 EXTERIOR STOREFRONT JAMB @ STONE VENEER
3" = 1'-0"

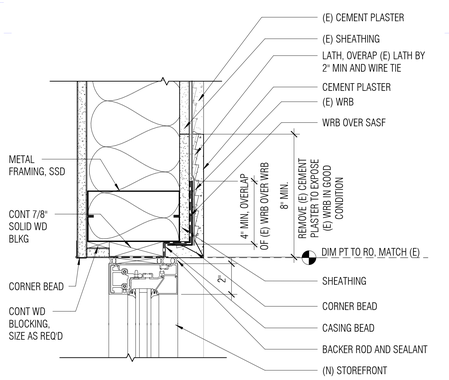

6 A6.11.1 EXTERIOR STOREFRONT JAMB @ CEMENT PLASTER
3" = 1'-0"

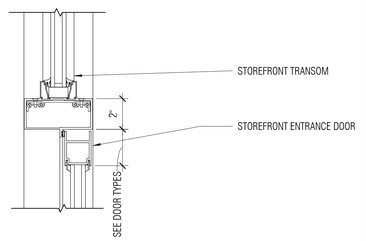

2 A6.11.1 STOREFRONT DOOR HEAD @ TRANSOM
3" = 1'-0"

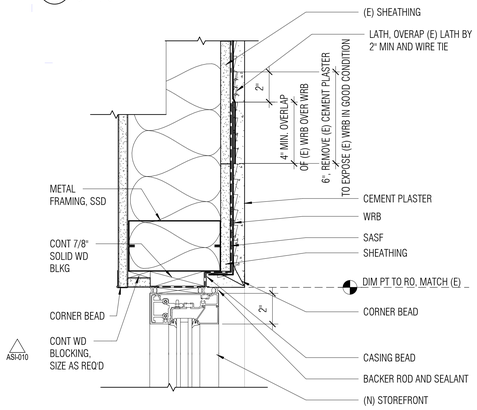

15 A6.11.1 EXTERIOR STOREFRONT JAMB @ CEMENT PLASTER
3" = 1'-0"

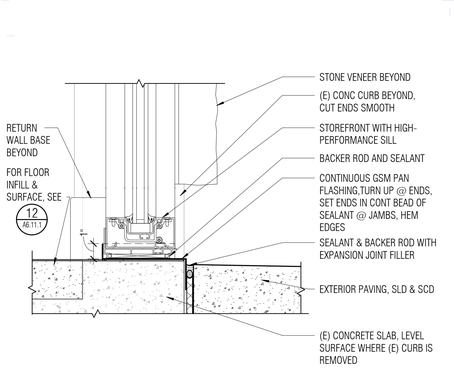

11 A6.11.1 STOREFRONT SILL @ GRADE
3" = 1'-0"

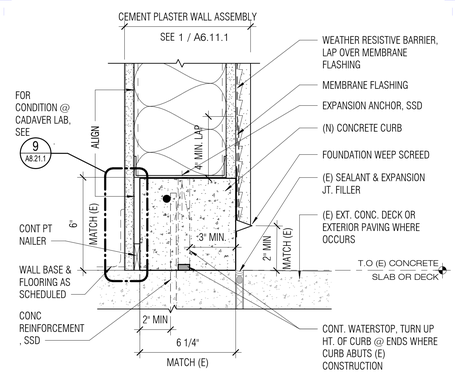

7 A6.11.1 CONCRETE CURB @ EXTERIOR WALL
3" = 1'-0"

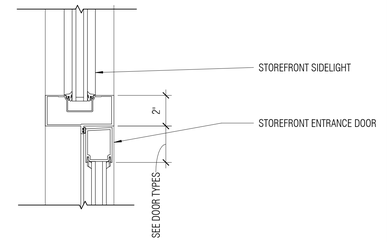

3 A6.11.1 STOREFRONT DOOR JAMB @ SIDELIGHT
3" = 1'-0"

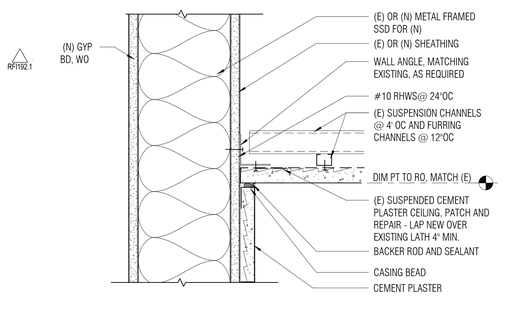

16 A6.11.1 EXT. WALL HEAD @ CEMENT PLASTER
3" = 1'-0"

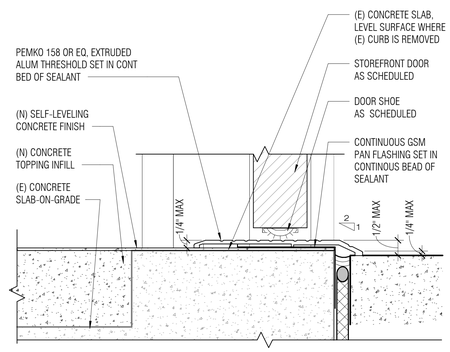

12 A6.11.1 EXTERIOR THRESHOLD @ GRADE @ BOOKSTORE
6" = 1'-0"

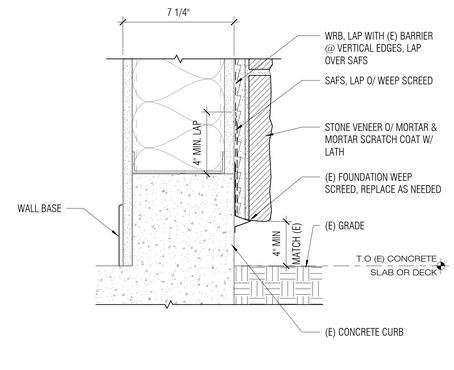

8 A6.11.1 CONCRETE CURB @ EXTERIOR WALL W/ STONE VENEER
3" = 1'-0"

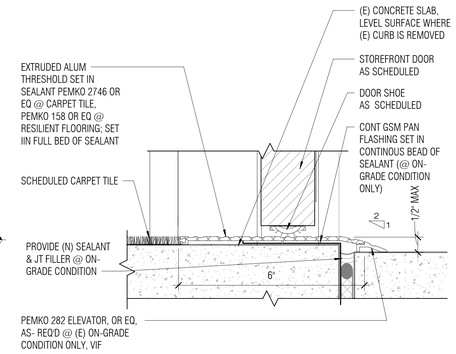

4 A6.11.1 EXTERIOR THRESHOLD @ GRADE, TYP (SIM @ 2ND FLR)
6" = 1'-0"

NOLL & TAM ARCHITECTS
729 Heinz Avenue
Berkeley, CA 94710
tel 510.542.2200
fax 510.542.2201

ARCHITECTS SEAL

LICENSED ARCHITECT
CHRISTOPHER NOLL
No. C15916
REN. 12-31-21
STATE OF CALIFORNIA

APPROVALS

FILE NUMBER: 07-C1

DIVISION OF THE STATE ARCHITECT
APP# 01-117630
ACS_____ FLS_____ SSS_____
Date:

PROJECT TITLE

CONTRA COSTA CCD
D-4002
DVC SAN RAMON CAMPUS EXPANSION & RENOVATION

1690 Watermill Rd.
San Ramon, CA 94582

ISSUE TITLE

INCREMENT 1 - RENOVATION

ISSUE DATE	4/26/19
NOLL & TAM JOB NUMBER	21630

REVISIONS

	DATE	DESCRIPTION
1	6/21/19	ASI 010
2	11/5/19	INC 1 RFI192.1

SHEET TITLE

EXTERIOR DETAILS

SHEET NUMBER

A6.11.1

10/11/2021 2:36:05 PM C:\Users\phan.dung\Documents\Revit Locals\DVCSR Expansion_Central 2020_phan.dung@nollandtam.com.rvt

SHEET NOTES

1. REFER TO ELECTRICAL, FIRE SPRINKLER, FIRE ALARM, & TECH DRAWINGS FOR MORE INFORMATION AND LOCATIONS OF SWITCHES, RECEPTACLES, DATA OUTLETS AND DEVICES, ETC.
2. SEE ACCESSIBILITY DETAILS ON G3.21.0 & ELECTRICAL AND TECH DRAWINGS FOR MOUNTING HEIGHTS INCLUDING BUT NOT LIMITED TO LIGHT SWITCHES, ELECTRICAL RECEPTACLES & DATA OUTLETS, FEC, ACCESSORIES, & EQUIPMENT WITH OPERABLE PARTS, ETC.

KEYNOTES

Key Value	Keynote Text
02-54	EXISTING SINK TROUGH AND FAUCET TO REMAIN. PROTECT IN PLACE
02-58	EXISTING 2-TIER LOCKERS TO REMAIN. PROTECT IN PLACE
02-70	EXISTING STOREFRONT
02-74	EXISTING DOOR TO REMAIN
02-87	EXISTING STRUCTURAL STEEL BRACE FRAME
02-93	(E) WALL BASE TO REMAIN
09-34	(N) WALL BASE AS SCHEDULED
10-02	NEW MARKERBOARD
10-03	NEW BULLETIN BOARD (SIZE PER ELEVATIONS)
10-29	NEW SIGN AS SCHEDULED
11-02	NEW 3 WIDE 2-TIER LOCKERS WITH LEGS, BOTTOM LOCKERS TO BE ACCESSIBLE, SEE 18/G3.21.0
11-17	OFCI - PAPER TOWEL DISPENSER, KIMBERLY-CLARK MOD.34346, PROVIDE BACKING @ GYP. BD & METAL STUD WALLS
11-32	PROJECTOR & MOUNT, SEE RCP & TECH DRAWINGS FOR MORE INFORMATION
11-33	PROJECTOR SCREEN. SEE RCP & TECH DRAWINGS FOR MORE INFORMATION
26-08	NEW LIGHT FIXTURES (PENDANT, RECESSED,ETC) SED
27-02	RELOCATED DISTRICT STANDARD AV BLACKBOX FROM CLASSROOM 232, CLASSROOM 229
27-04	(E) RELOCATED DISTRICT STANDARD AV BLACK BOX FROM SAME ROOM

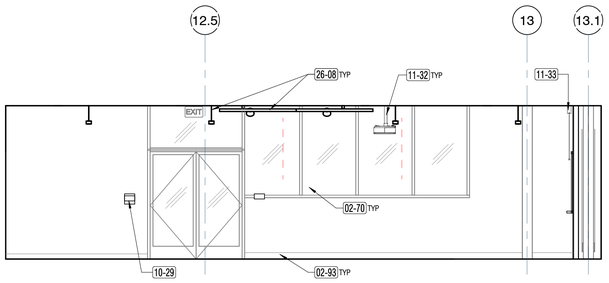

1N

1N INTERIOR ELEVATION - PAINTING STUDIO ROOM 166

1N / A7.11.1 — 1/4" = 1'-0"

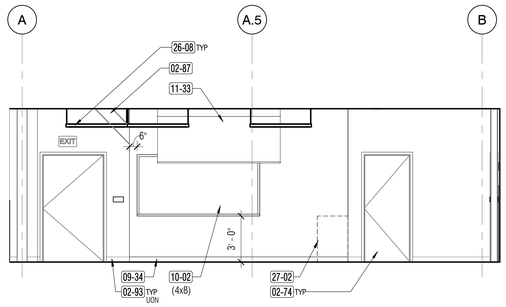

1E

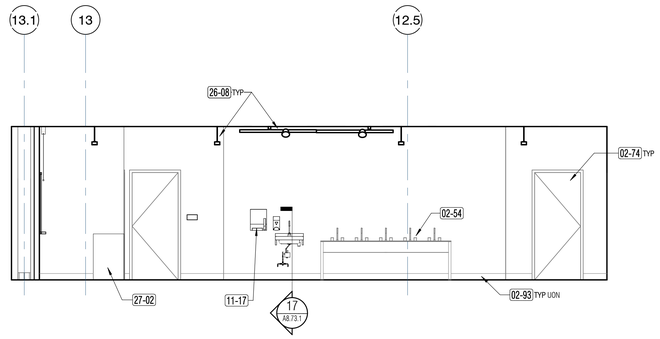

1S

1S INTERIOR ELEVATION - PAINTING STUDIO ROOM 166 (CONT.)

1S / A7.11.1 — 1/4" = 1'-0"

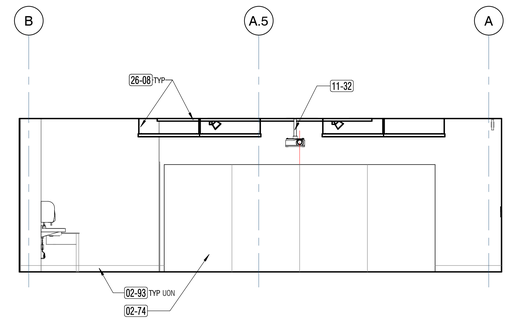

1W

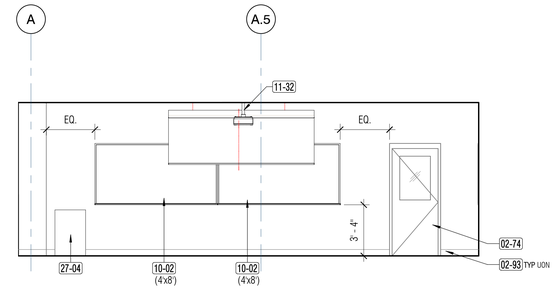

2 INTERIOR ELEVATION - CLASSROOM 162 EAST

2 / A7.11.1 — 1/4" = 1'-0"

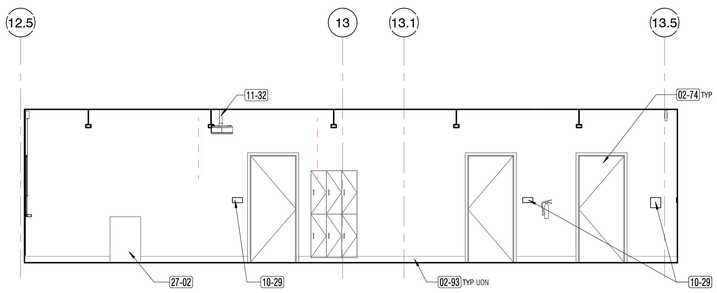

3N

3N INTERIOR ELEVATION - DRAWING STUDIO ROOM 168

3N / A7.11.1 — 1/4" = 1'-0"

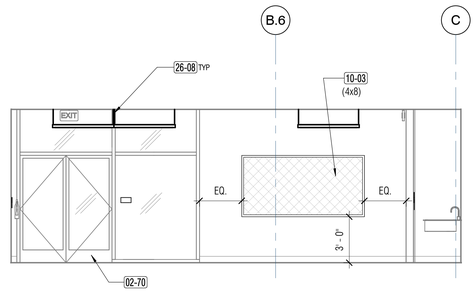

3E

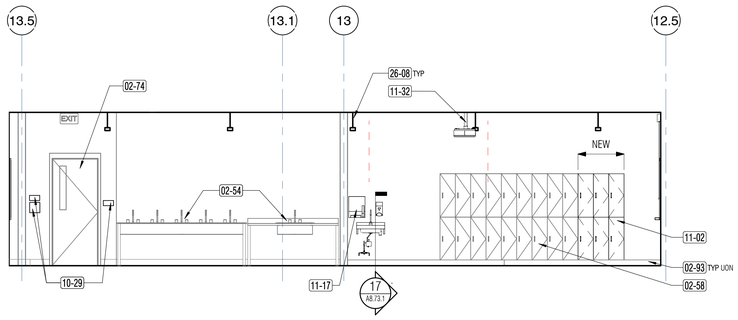

3S

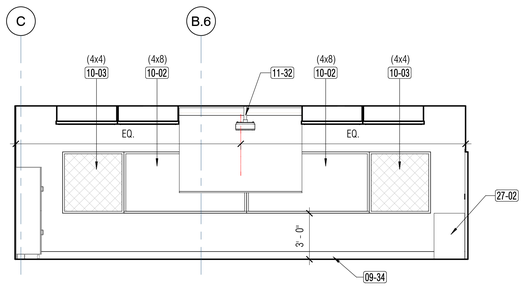

3W

3W INTERIOR ELEVATION - DRAWING STUDIO ROOM 168 (CONT.)

3W / A7.11.1 — 1/4" = 1'-0"

NOLL & TAM ARCHITECTS

729 Heinz Avenue
Berkeley, CA 94710
tel 510.542.2200
fax 510.542.2201

ARCHITECTS SEAL

LICENSED ARCHITECT
CHRISTOPHER NOLL
No. C15916
REN. 12-31-21
STATE OF CALIFORNIA

APPROVALS

FILE NUMBER: 07-C1

DIVISION OF THE STATE ARCHITECT

APP# 01-117630

ACS_____FLS_____SSS_____
Date:

PROJECT TITLE

CONTRA COSTA CCD
D-4002
DVC SAN RAMON CAMPUS EXPANSION & RENOVATION

1690 Watermill Rd.
San Ramon, CA 94582

ISSUE TITLE

INCREMENT 1 - RENOVATION

ISSUE DATE 4/26/19

NOLL & TAM JOB NUMBER 21630

REVISIONS

	DATE	DESCRIPTION

SHEET TITLE

INTERIOR ELEVATIONS - 1ST FLOOR

SHEET NUMBER

A7.11.1

10/11/2021 2:36:11 PM C:\Users\pham.dung\Documents\Revit Locals\DVCSR Expansion_Central 2020_pham.dung@nollandtam.com.rvt

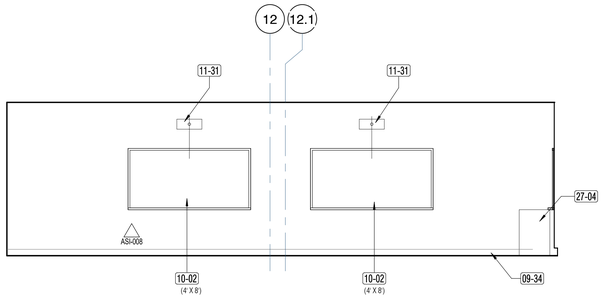

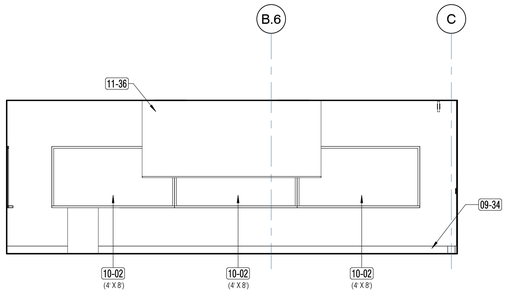

1N

1N A7.12.1 **INTERIOR ELEVATION - CLASSROOM 164**

1/4" = 1'-0"

1E

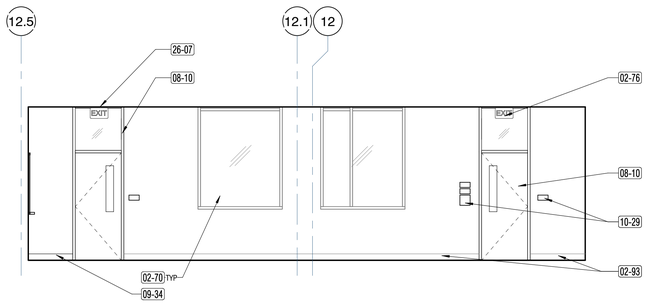

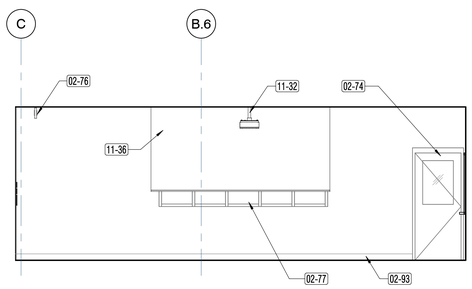

1S

1S A7.12.1 **INTERIOR ELEVATION - CLASSROOM 164 (CONT.)**

1/4" = 1'-0"

1W

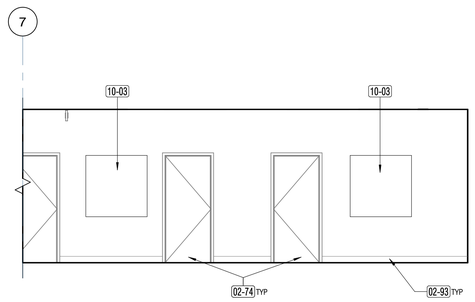

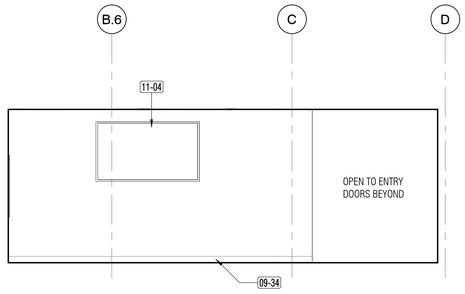

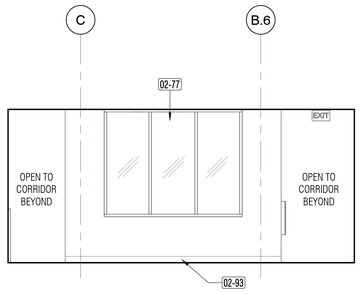

2N

2N A7.12.1 **INTERIOR ELEVATION - WAITING AREA NORTH**

1/4" = 1'-0"

2E

2W

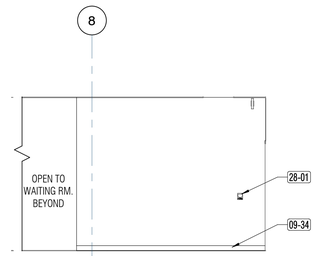

4 A7.12.1 **INTERIOR ELEVATION @ ADMISSIONS ENTRY**

1/4" = 1'-0"

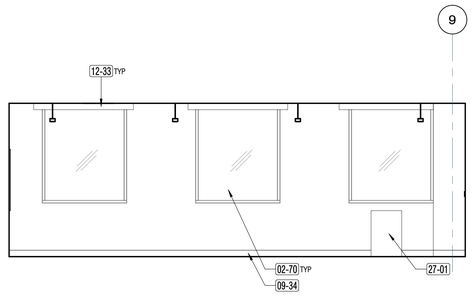

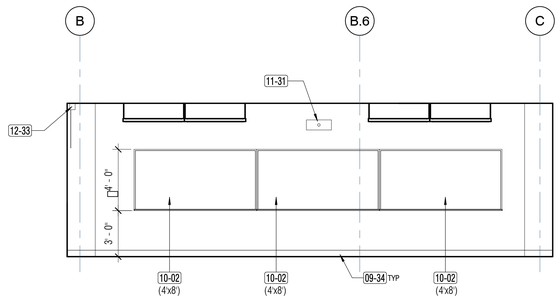

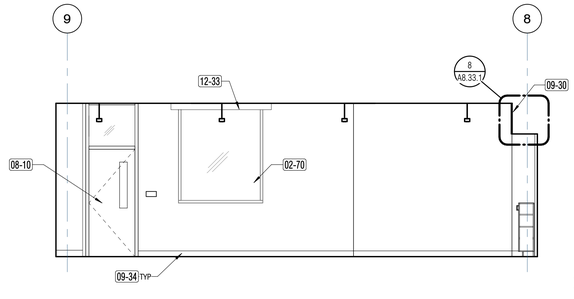

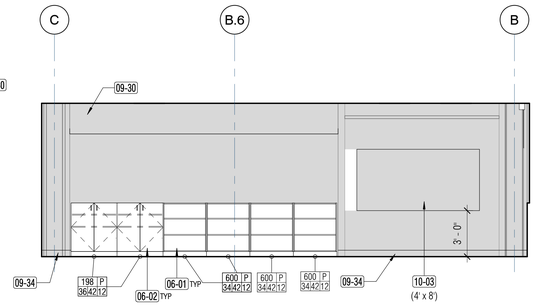

3N

3N A7.12.1 **INTERIOR ELEVATION - ASSESSMENT LAB**

1/4" = 1'-0"

3E

3S

3W

SHEET NOTES

1. REFER TO ELECTRICAL, FIRE SPRINKLER, FIRE ALARM, & TECH DRAWINGS FOR MORE INFORMATION AND LOCATIONS OF SWITCHES, RECEPTACLES, DATA OUTLETS AND DEVICES, ETC.
2. SEE ACCESSIBILITY DETAILS ON G3.21.0 & ELECTRICAL AND TECH DRAWINGS FOR MOUNTING HEIGHTS INCLUDING BUT NOT LIMITED TO LIGHT SWITCHES, ELECTRICAL RECEPTACLES & DATA OUTLETS, FEC, ACCESSORIES, & EQUIPMENT WITH OPERABLE PARTS, ETC.

KEYNOTES

Key Value	Keynote Text
02-70	EXISTING STOREFRONT
02-74	EXISTING DOOR TO REMAIN
02-76	EXISTING EXIT SIGN TO REMAIN
02-77	EXISTING WINDOW TO REMAIN
02-93	(E) WALL BASE TO REMAIN
06-01	NEW 42" HIGH WOOD SHELVING UNIT - ADJUSTABLE SHELVES FOR BACKPACK STORAGE
06-02	NEW 42" HIGH X 12' DEEP WOOD SHELVING WITH CABINET DOORS FOR SUPPLY STORAGE
08-10	(N) STOREFRONT
09-30	(N) GYPSUM BOARD SOFFIT
09-34	(N) WALL BASE AS SCHEDULED
10-02	NEW MARKERBOARD
10-03	NEW BULLETIN BOARD (SIZE PER ELEVATIONS)
10-29	NEW SIGN AS SCHEDULED
11-04	NEW WALL MOUNTED FLAT SCREEN TV, SEE ELECTRICAL AND TELECOM FOR HOOKUP. LOCATE COMPUTER INTERFACE IN ADJACENT ASSESSMENT LAB 148
11-31	(N) SHORT-THROW PROJECTOR & MOUNT, OFCI, STED FOR MORE INFORMATION
11-32	PROJECTOR & MOUNT, SEE RCP & TECH DRAWINGS FOR MORE INFORMATION
11-36	NEW RECESSED MOTORIZED PROJECTOR SCREEN
12-33	NEW MANUAL WINDOW SHADES WITH FASCIA
26-07	NEW EXIT SIGN, SED
27-01	NEW DISTRICT STANDARD AV BLACKBOX, SEE TELECOM DWGS
27-04	(E) RELOCATED DISTRICT STANDARD AV BLACK BOX FROM SAME ROOM
28-01	NEW PULL STATION, SEE FIRE ALARM DRAWINGS FOR INFORMATION & MOUNTING HEIGHT.

NOLL & TAM ARCHITECTS

729 Heinz Avenue
Berkeley, CA 94710
tel 510.542.2200
fax 510.542.2201

ARCHITECTS SEAL

LICENSED ARCHITECT
CHRISTOPHER NOLL
No. C15916
REN. 12-31-21
STATE OF CALIFORNIA

APPROVALS

FILE NUMBER: 07-C1

DIVISION OF THE STATE ARCHITECT

APP# 01-117630

ACS_____FLS_____SSS_____
Date:

PROJECT TITLE

CONTRA COSTA CCD
D-4002
DVC SAN RAMON CAMPUS EXPANSION & RENOVATION

1690 Watermill Rd.
San Ramon, CA 94582

ISSUE TITLE

INCREMENT 1 - RENOVATION

ISSUE DATE **4/26/19**

NOLL & TAM JOB NUMBER **21630**

REVISIONS

	DATE	DESCRIPTION
1	6/11/19	ASI 008

SHEET TITLE

INTERIOR ELEVATIONS - 1ST FLOOR

SHEET NUMBER

A7.12.1

10/11/2021 2:36:16 PM C:\Users\phan.dung\Documents\Revit Locals\DVCSR Expansion_Central 2020_phan.dung@nollandtam.com.rvt

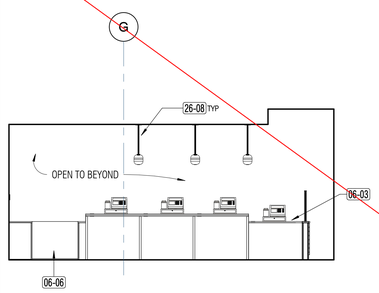

1 A7.13.1 **INTERIOR ELEVATION - BOOKSTORE COUNTER EAST**
1/4" = 1'-0"

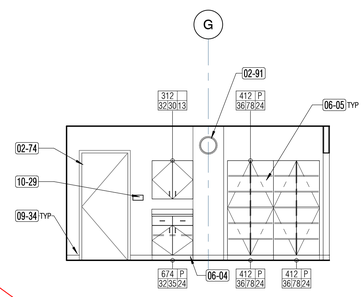

2 A7.13.1 **INTERIOR ELEVATION - BOOKSTORE COUNTER WEST**
1/4" = 1'-0"

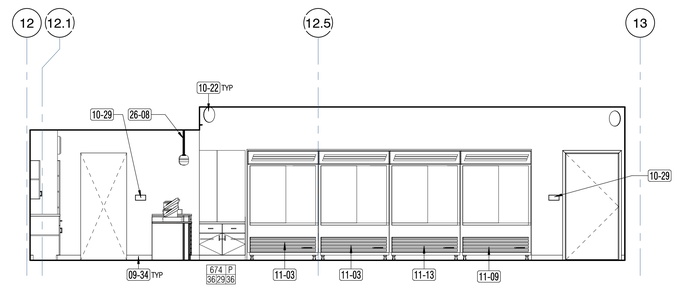

3 A7.13.1 **INTERIOR ELEVATION - BOOKSTORE NORTH**
1/4" = 1'-0"

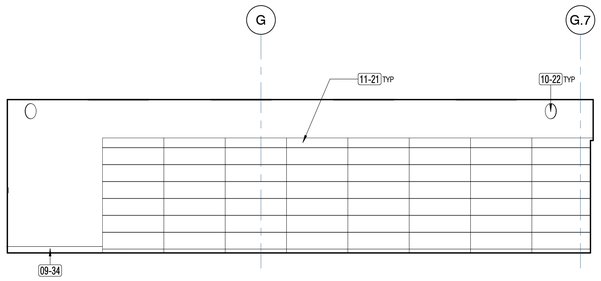

4 A7.13.1 **INTERIOR ELEVATION - BOOKSTORE EAST**
1/4" = 1'-0"

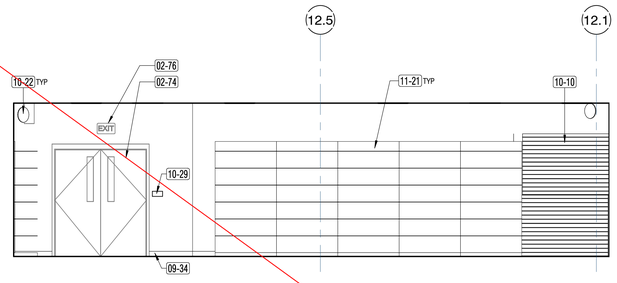

5 A7.13.1 **INTERIOR ELEVATION - BOOKSTORE SOUTH**
1/4" = 1'-0"

REMOVED FROM SCOPE CCDA-8

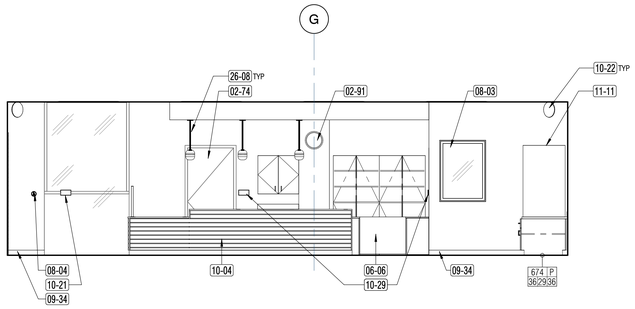

6 A7.13.1 **INTERIOR ELEVATION - BOOKSTORE WEST**
1/4" = 1'-0"

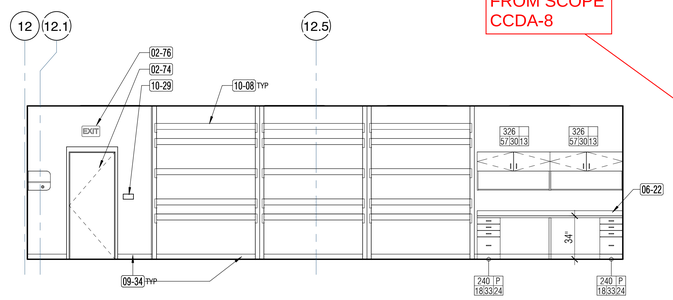

7 A7.13.1 **INTERIOR ELEVATION - BOOKSTORE STORAGE NORTH**
1/4" = 1'-0"

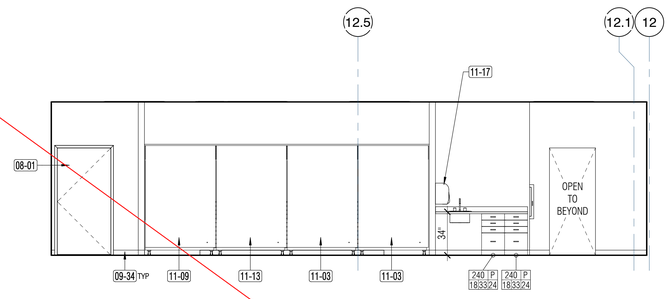

8 A7.13.1 **INTERIOR ELEVATION - BOOKSTORE STORAGE SOUTH**
1/4" = 1'-0"

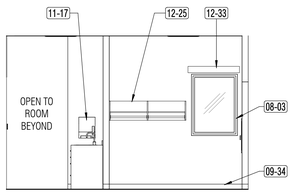

9 A7.13.1 **INTERIOR ELEVATION - OFFICE EAST**
1/4" = 1'-0"

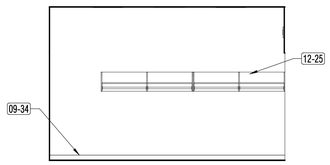

10 A7.13.1 **INTERIOR ELEVATION - OFFICE WEST**
1/4" = 1'-0"

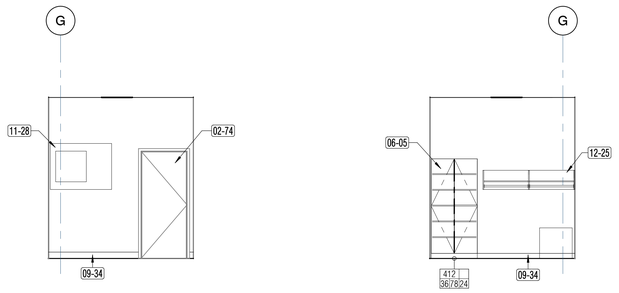

11E 11W
11E A7.13.1 **INTERIOR ELEVATION - WORKROOM EAST**
1/4" = 1'-0"

SHEET NOTES

1. REFER TO ELECTRICAL, FIRE SPRINKLER, FIRE ALARM, & TECH DRAWINGS FOR MORE INFORMATION AND LOCATIONS OF SWITCHES, RECEPTACLES, DATA OUTLETS AND DEVICES, ETC.
2. SEE ACCESSIBILITY DETAILS ON G3.21.0 & ELECTRICAL AND TECH DRAWINGS FOR MOUNTING HEIGHTS INCLUDING BUT NOT LIMITED TO LIGHT SWITCHES, ELECTRICAL RECEPTACLES & DATA OUTLETS, FEC, ACCESSORIES, & EQUIPMENT WITH OPERABLE PARTS, ETC.

KEYNOTES

Key Value	Keynote Text
02-74	EXISTING DOOR TO REMAIN
02-76	EXISTING EXIT SIGN TO REMAIN
02-91	(E) WALL CLOCK TO REMAIN. COORDINATE TEMPORARY REMOVAL WITH OWNER TO PROTECT DURING CONSTRUCTION.
06-03	NEW COUNTERTOP OVER PLAM BASE CABINETS - CASHIER STATION
06-04	NEW SOLID SURFACE COUNTERTOP OVER PLAM BASE CABINET, AND UPPER CABINET
06-05	NEW TALL STORAGE CABINETS
06-06	NEW CASEWORK GATE
06-22	NEW SHIPPING, RECEIVING COUNTERTOP - SOLID SURFACE COUNTERTOP AND BASE CABINETS, UPPER CABINETS.
08-01	NEW DOOR
08-03	NEW INTERIOR WINDOW
08-04	(N) WALL MOUNTED PUSH PLATE DOOR ACTUATOR
09-34	(N) WALL BASE AS SCHEDULED
10-04	SLATWALL ON CASEWORK
10-08	RE-INSTALL HEAVY DUTY SHELVING RACK FROM EXISTING CERAMIC STUDIO 168. PROVIDE BACKING AND ANGLE CLIPS TO BRACE TO WALL.
10-10	RE-INSTALL EXISTING SLAT WALL FROM EXISTING BOOKSTORE 107
10-21	NEW TACTILE EXIT SIGNAGE
10-22	RE-INSTALL EXISTING CONVEX SECURITY MIRROR ON WALL. FINAL LOCATION TO BE COORDINATED WITH DVCSR
10-29	NEW SIGN AS SCHEDULED
11-03	NEW REAR-LOADING BEVERAGE COOLERS, SED, SPD FOR ELECTRICAL AND PLUMBING REQUIREMENTS.SEE FOOD SERVICE DRAWINGS FOR SPECIFIC EQUIPMENT
11-09	NEW REFRIGERATED DISPLAY FOOD CASE, SED, SPD FOR ELECTRICAL AND PLUMBING REQUIREMENTS. SEE FOOD SERVICE DWGS
11-11	NEW MILKSHAKE BLENDING-FREEZER MACHINE - SED SPD - FOR WATER , DRAINAGE AND ELECTRICAL REQUIREMENTS. SEE FOOD SERVICE DWGS
11-13	NEW FREEZER, SED, SPD FOR ELECTRICAL AND PLUMBING REQUIREMENTS . SEE FOOD SERVICE DWGS
11-17	OFCI - PAPER TOWEL DISPENSER, KIMBERLY-CLARK MOD.34346, PROVIDE BACKING @ GYP. BD & METAL STUD WALLS
11-21	NEW 76" HIGH METAL CANTILEVER SHELVING (48" W x 18"D x 76"H) WITH SECURITY ROLL-DOWN SHUTTER (CLEAR SLATS) ON GUIDERAILS. ENDPANELS REQUIRED AT EACH SECTION OF ROLL-DOWN SHUTTER
11-28	(N) WALL-MOUNTED TELECOM EQUIPMENT RACK ON FIRE-RESISTANT PLYWOOD BACKING, STED
12-25	WALL MOUNTED FURNITURE/CASEWORK STORAGE UNIT, OFCI TYP, SEE FURNITURE PLAN. PROVIDE BACKING AT WALL - TOP AND BOTTOM.
12-33	NEW MANUAL WINDOW SHADES WITH FASCIA
26-08	NEW LIGHT FIXTURES (PENDANT, RECESSED,ETC) SED

NOLL & TAM ARCHITECTS
729 Heinz Avenue
Berkeley, CA 94710
tel 510.542.2200
fax 510.542.2201

ARCHITECTS SEAL

LICENSED ARCHITECT
CHRISTOPHER NOLL
No. C15916
REN. 12-31-21
STATE OF CALIFORNIA

APPROVALS
FILE NUMBER: 07-C1
DIVISION OF THE STATE ARCHITECT
APP# 01-117630
ACS_____FLS_____SSS_____
Date:

PROJECT TITLE
CONTRA COSTA CCD
D-4002
DVC SAN RAMON CAMPUS EXPANSION & RENOVATION
1690 Watermill Rd.
San Ramon, CA 94582

ISSUE TITLE
INCREMENT 1 - RENOVATION

ISSUE DATE 4/26/19
NOLL & TAM JOB NUMBER 21630

REVISIONS
| | DATE | DESCRIPTION |

SHEET TITLE
INTERIOR ELEVATIONS - BOOKSTORE

SHEET NUMBER
A7.13.1

10/11/2021 2:36:23 PM C:\Users\phan.dung\Documents\Revit Local\DVCSR Expansion_Central 2020_phan.dung@nollandtam.com.rvt

SHEET NOTES

1. REFER TO ELECTRICAL, FIRE SPRINKLER, FIRE ALARM, & TECH DRAWINGS FOR MORE INFORMATION AND LOCATIONS OF SWITCHES, RECEPTACLES, DATA OUTLETS AND DEVICES, ETC.
2. SEE ACCESSIBILITY DETAILS ON G3.21.0 & ELECTRICAL AND TECH DRAWINGS FOR MOUNTING HEIGHTS INCLUDING BUT NOT LIMITED TO LIGHT SWITCHES, ELECTRICAL RECEPTACLES & DATA OUTLETS, FEC, ACCESSORIES, & EQUIPMENT WITH OPERABLE PARTS, ETC.

KEYNOTES

Key Value	Keynote Text
02-07	(E) STEEL COLUMN
02-43	EXISTING PROJECTOR SCREEN TO REMAIN
02-70	EXISTING STOREFRONT
02-74	EXISTING DOOR TO REMAIN
02-77	EXISTING WINDOW TO REMAIN
02-82	EXISTING MARKERBOARD TO REMAIN
02-93	(E) WALL BASE TO REMAIN
02-98	(E) DOOR FRAME TO REMAIN
06-09	NEW GLASS DISPLAY CABINETS
08-01	NEW DOOR
09-34	(N) WALL BASE AS SCHEDULED
10-02	NEW MARKERBOARD
10-29	NEW SIGN AS SCHEDULED
26-07	NEW EXIT SIGN, SED
26-15	NEW LIGHT FIXTURE AS SCHEDULED, SED

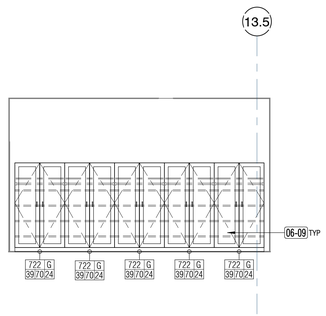

1N

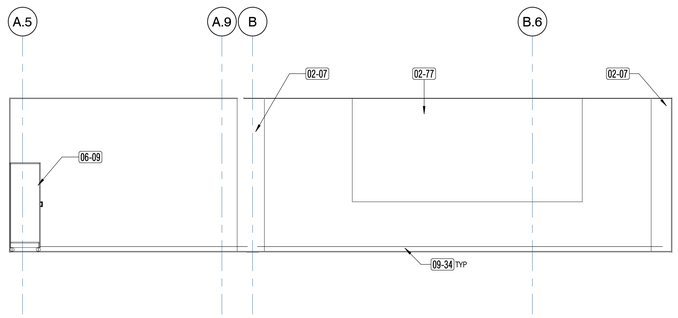

1E

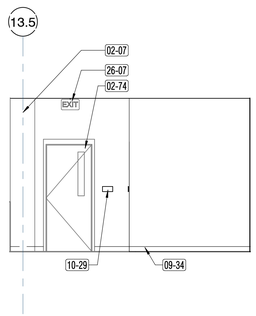

1S

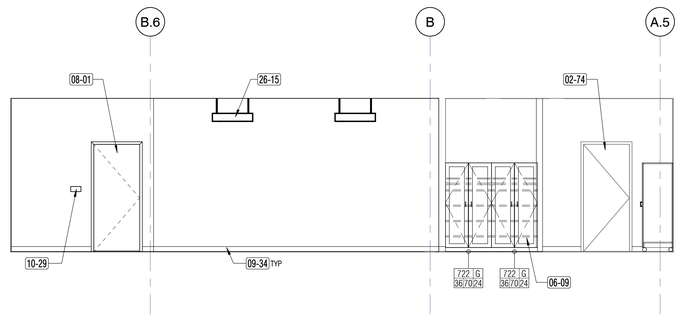

1W

1N INTERIOR ELEVATION - ALCOVE
1/4" = 1'-0"

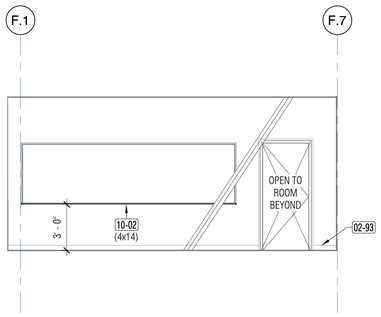

2E

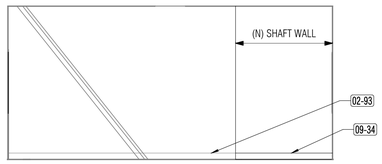

2S

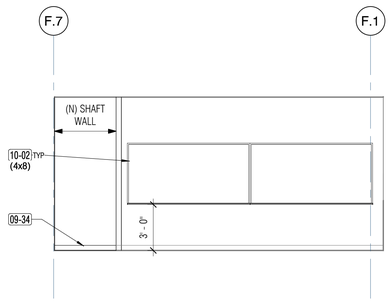

2W

2E INTERIOR ELEVATION - TEMPORARY STUDY ROOM - EAST
1/4" = 1'-0"

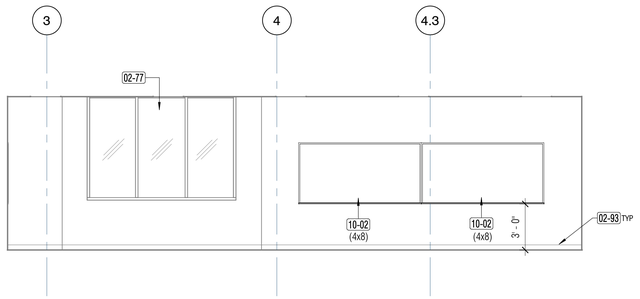

3N

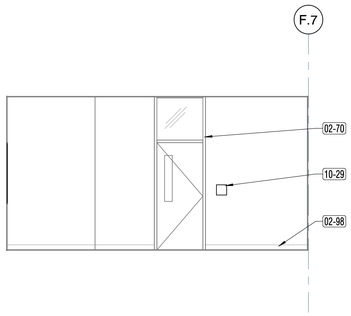

3E

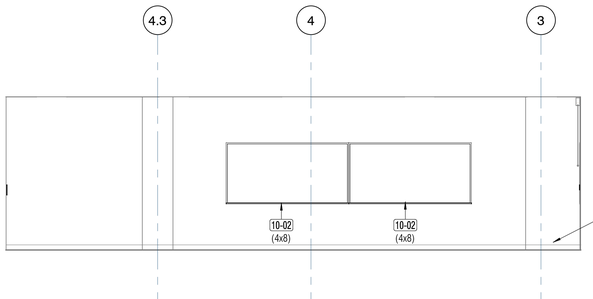

3S

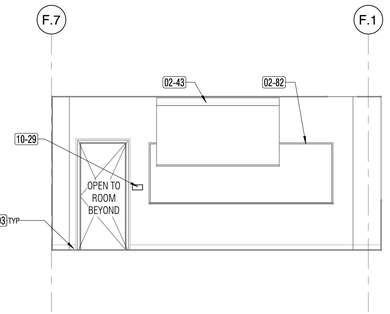

3W

3N INTERIOR ELEVATION - TEMPORARY TUTORIAL - NORTH
1/4" = 1'-0"

NOLL & TAM ARCHITECTS
729 Heinz Avenue
Berkeley, CA 94710
tel 510.542.2200
fax 510.542.2201

ARCHITECTS SEAL

LICENSED ARCHITECT
CHRISTOPHER NOLL
No. C15916
REN. 12-31-21
STATE OF CALIFORNIA

APPROVALS
FILE NUMBER: 07-C1
DIVISION OF THE STATE ARCHITECT
APP# 01-117630
ACS_____FLS_____SSS_____
Date:

PROJECT TITLE
CONTRA COSTA CCD
D-4002
DVC SAN RAMON CAMPUS EXPANSION & RENOVATION
1690 Watermill Rd.
San Ramon, CA 94582

ISSUE TITLE
INCREMENT 1 - RENOVATION

ISSUE DATE	4/26/19
NOLL & TAM JOB NUMBER	21630

REVISIONS
	DATE	DESCRIPTION

SHEET TITLE
INTERIOR ELEVATIONS - SECOND FLOOR

SHEET NUMBER
A7.14.1

10/11/2021 2:36:29 PM C:\Users\phan.dung\Documents\Revit Locals\DVCSR Expansion_Central 2020_phan.dung@nollandtam.com.rvt

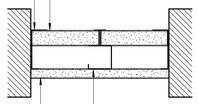

FLOOR, SIDE, AND CEILING RUNNERS - "J" SHAPED RUNNER, MIN 2 1/2" DEEP, WITH UNEQUAL EDGES OF 1" AND 2", FABRICATED FROM MIN 24 MSG GALV STEEL. RUNNERS POSITIONED WITH SHORT LEG TOWARD FINISHED INSIDE OF WALL. RUNNERS ATTACHED TO STRUCTURAL SUPPORTS WITH STEEL FASTENERS LOCATED NOT GREATER THAN 2" FROM ENDS AND NOT GREATER THAN 24" OC.

GYPSUM BOARD - GYPSUM LINER PANELS, NOM 1" THICK, 24" WIDE. VERTICAL EDGES INSERTED IN "H" PORTION OF "C-H" STUDS. FREE EDGE OF END PANELS ATTACHED TO LONG LEG OF VERTICAL "J" RUNNERS WITH 1 5/8" LONG TYPE S SELF-DRILLING STEEL SCREWS SPACED NOT GREATER THAN 12" OC. (≤ 24" O.C. FOR UL W419)

STEEL STUDS - "C-H" SHAPED STUDS, MIN 2 1/2" DEEP (AND 1 1/2" WIDE IN UL W419), FABRICATED FROM MIN 25 MSG GALV STEEL. CUT TO LEGNTHS 3/8" TO 1/2" LESS THAN FLOOR-TO-CEILING HEIGHT AND SPACED 24" OC.

GYPSUM BOARD - GYPSUM PANELS, WITH BEVELED, SQUARE OR TAPERED EDGES, NOM 5/8" THICK, 48" WIDE, APPLIED VERTICALLY OR HORIZONTALLY, ATTACHED TO STUDS WITH 1" LONG TYPE S STEEL SCREWS SPACED 12" WHEN INSTALLED VERTICALLY OR 8" OC WHEN INSTALLED HORIZONTALLY.

UL DESIGN NO. 415
(UL W419 SIM. AS NOTED)
NER DESIGN NO. 258
1HR FIRE RATED ASSEMBLY

6 / A8.10.1 **1 HOUR SHAFT WALL**
3" = 1'-0"

ADD. ADD

HEAD DETAILS			
13 / A8.11.1	EXISTING EXT. PARTITION WHERE OCCURS. SEE PLAN STEEL STUD FRAMING, 20 GA MIN, @ 16" OC, SEE NOTES 1 & 2 GYPSUM BOARD: 1 LAYER - 5/8" THICK 4 5/8" STEEL BRIDGING @ 48" OC MAX, SSD		
SILL DETAILS			
2 / A8.11.1 SIM			
LISTED ASSEMBLY	NON-RATED	ACOUSTICAL DATA	N/A

E1 INTERIOR WALL FURRING - PART HEIGHT

HEAD DETAILS			
1 / A8.11.1	STEEL STUD FRAMING, 20 GA MIN @ 16" OC, SEE NOTES 1 & 2 FIBERGLASS BATT INSULATION, FILL STUD CAVITY GYPSUM BOARD: 1 LAYER - 5/8" THICK, EA. SIDE OF WALL VARIES		
SILL DETAILS			
2 / A8.11.1 CCDA-06			
LISTED ASSEMBLY	NON-RATED	ACOUSTICAL DATA	STC-44

A INTERIOR NON-BEARING PARTITION

HEAD DETAILS			
1 / A8.11.1 SIM	STEEL STUD FRAMING, 18 GA MIN, @ 16" OC, SEE NOTES 1 & 2 GYPSUM BOARD: 1 LAYER - 5/8" THICK 4 5/8" STEEL BRIDGING @ 48" OC MAX, SSD		
SILL DETAILS			
2 / A8.11.1 SIM			
LISTED ASSEMBLY	NON-RATED	ACOUSTICAL DATA	N/A

E2 INTERIOR WALL FURRING - FULL HEIGHT

HEAD DETAILS			
1 / A8.11.1	STEEL STUD FRAMING, 20 GA MIN @ 16" OC, SEE NOTES 1 & 2 FIBERGLASS BATT INSULATION, FILL STUD CAVITY GYPSUM BOARD: (2) LAYERS - 5/8" THICK VARIES GYPSUM BOARD: 1 LAYER - 5/8" THICK		
SILL DETAILS			
2 / A8.11.1 CCDA-06			
LISTED ASSEMBLY	NON-RATED	ACOUSTICAL DATA	STC-47

B INTERIOR NON-BEARING PARTITION

HEAD DETAILS			
6 / A8.11.1 12 / A8.11.1 CCDA-06	20 GA STEEL STUD FRAMING @ 16" OC, SEE NOTE 1 FIBERGLASS BATT INSULATION, FILL STUD CAVITY (2) LAYERS 5/8" TYPE 'X' GYPSUM BOARD STEEL BRIDGING @ 48" OC MAX, SSD. OFFSET FROM ISOLATION CLIPS. 20 GA., 7/8" HAT CHANNEL IN SOUND ISOLATION CLIP, CLIP APPLIED HORIZONTALLY @ 24" OC MAX TYPICAL, OR 16" OC MAX WHERE UNDER MARKERBOARDS VARIES SOUND ISOLATION CLIP SPACED @ 48" OC MAX GYPSUM BOARD: 1 LAYER - 5/8" THICK		
SILL DETAILS			
7 / A8.11.1			
LISTED ASSEMBLY	NON-RATED	ACOUSTICAL DATA	STC-60 (RAL-TL06-025)

K INTERIOR NON-BEARING PARTITION

HEAD DETAILS			
1 / A8.11.1 SIM	MATCH (E) DIM. @ BRACED FRAME CONDITION (E) WALL ASSEMBLY 4" STEEL STUD FRAMING, 20 GA MIN @ 16" OC, SEE NOTE 2 FIBERGLASS BATT INSULATION, MIN. R-11 TO MATCH (E) GYPSUM BOARD: 1 LAYER - 5/8" THICK STEEL BRIDGING @ 48" OC MAX, SSD 4 5/8"		
SILL DETAILS			
2 / A8.11.1 SIM			
LISTED ASSEMBLY	NON-RATED	ACOUSTICAL DATA	N/A

F INTERIOR WALL FURRING

HEAD DETAILS			
1 / A8.11.1	STEEL STUD FRAMING, 20 GA MIN @ 16" OC, SSD, SEE NOTES 1 & 2 FIBERGLASS BATT INSULATION, FILL STUD CAVITY GYPSUM BOARD: (2) LAYERS - 5/8" THICK, EACH SIDE OF WALL VARIES		
SILL DETAILS			
2 / A8.11.1 CCDA-06			
LISTED ASSEMBLY	NON-RATED	ACOUSTICAL DATA	SOUND-RATED ASSEMBLY

C INTERIOR NON-BEARING PARTITION

HEAD DETAILS			
– / – / – / – / 18 / A8.11.1 / 19 / A8.11.1 CCDA-010	1" GYPSUM SHAFTLINER BOARD 4" STEEL C-H STUD, 20 GA @ 24" O.C. SEE 6 / A8.10.1 FOR ADDITIONAL REQUIREMENTS 4 5/8" 5/8" TYPE-X GYPSUM BOARD 4" FIBERGLASS BATT INSULATION, FILL STUD CAVITY		
SILL DETAILS			
4 / A8.11.1			
LISTED ASSEMBLY	1 HOUR RATED - UL# U415, W419	ACOUSTICAL DATA	STC-47

G SHAFT WALL - 1 HOUR FIRE RATED

HEAD DETAILS			
1 / A8.11.1	3 5/8" MIN. STEEL STUD FRAMING, 20 GA MIN @ 16" OC, SEE NOTE 2 GYPSUM BOARD: 1 LAYER - 5/8" THICK, EA. SIDE OF WALL 4 7/8"		
SILL DETAILS			
2 / A8.11.1 CCDA-06			
LISTED ASSEMBLY	NON-RATED	ACOUSTICAL DATA	N/A

D

PARTITION NOTES

1. FOR STEEL FRAMING SIZES NOT NOTED, SEE WALL TAGS ON PLANS
2. AT WALLS SUPPORTING WALL-HUNG UPPER CABINETS, PROVIDE 16 GA MIN STEEL STUDS WITH A STUD BACKING @ THE CABINET LOCATIONS. SEE 7/S9.02.1.
3. REFER TO SHEET A8.11.1 FOR TYPICAL PARTITION DETAILS

NOLL & TAM ARCHITECTS
729 Heinz Avenue
Berkeley, CA 94710
tel 510.542.2200
fax 510.542.2201

ARCHITECTS SEAL

LICENSED ARCHITECT
CHRISTOPHER NOLL
No. C15916
REN. 12-31-21
STATE OF CALIFORNIA

APPROVALS
FILE NUMBER: 07-C1
DIVISION OF THE STATE ARCHITECT
APP# 01-117630
ACS_____FLS_____SSS_____
Date:

PROJECT TITLE
CONTRA COSTA CCD
D-4002
DVC SAN RAMON CAMPUS EXPANSION & RENOVATION
1690 Watermill Rd.
San Ramon, CA 94582

ISSUE TITLE
INCREMENT 1 - RENOVATION

ISSUE DATE 4/26/19
NOLL & TAM JOB NUMBER 21630

REVISIONS

	DATE	DESCRIPTION
1	1/30/19	BID ADDENDUM 3
2	4/29/19	INC1 RFI62
3	7/10/19	INC 1 RFI102.4

SHEET TITLE
INTERIOR- PARTITION TYPE SCHEDULE

SHEET NUMBER
A8.10.1

10/11/2021 2:36:32 PM C:\Users\phan.dung\Documents\Revit Locals\DVCSR Expansion_Central 2020_phan.dung@nollandtam.com.rvt

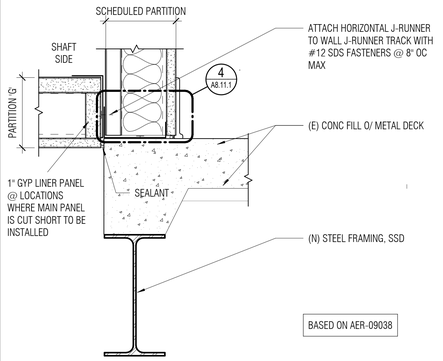

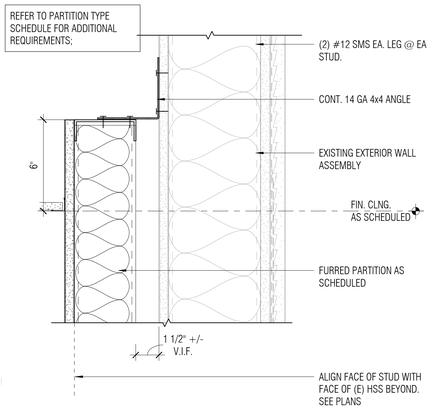

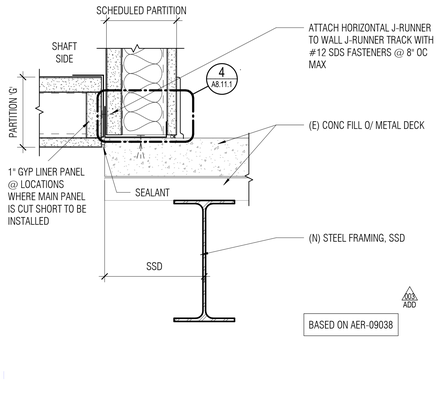

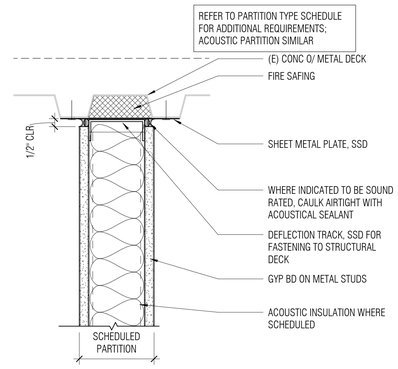

17 A8.11.1 TEMPORARY SHAFT BOTTOM @ PARTITION 'G' (PARALLEL DECK)
3" = 1'-0"

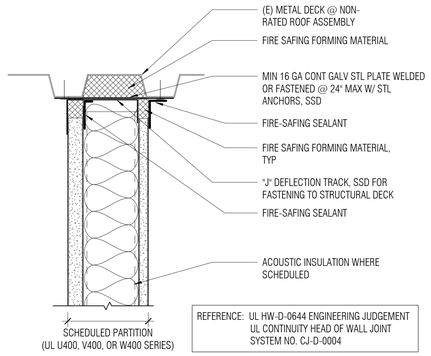

13 A8.11.1 HEAD @ FURRRED PARTITON
3" = 1'-0"

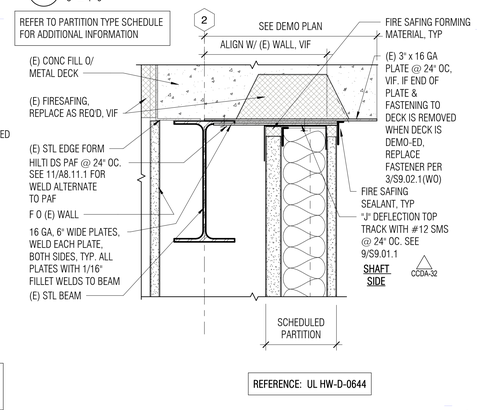

9 A8.11.1 TEMPORARY SHAFT BOTTOM @ PARTITION 'G'
3" = 1'-0"

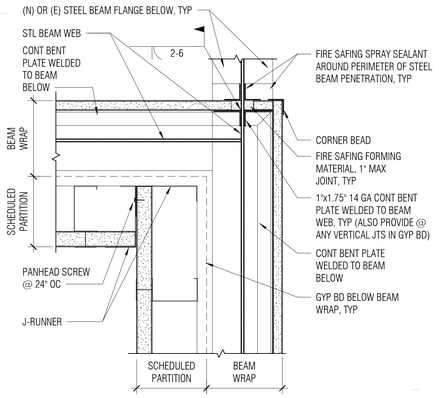

1 A8.11.1 TYPICAL NON-RATED PARTITION @ TOP
3" = 1'-0"

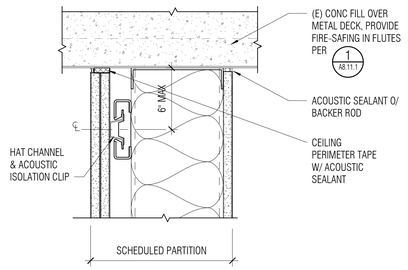

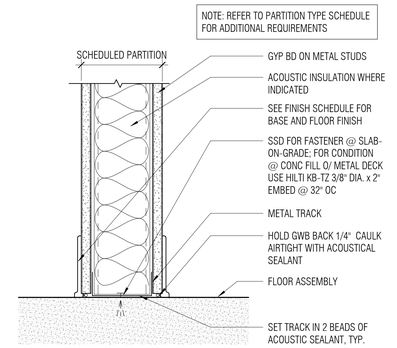

18 A8.11.1 SHAFT WALL @ NON-RATED ROOF (PARALLEL TO DECK FLUTES)
3" = 1'-0"

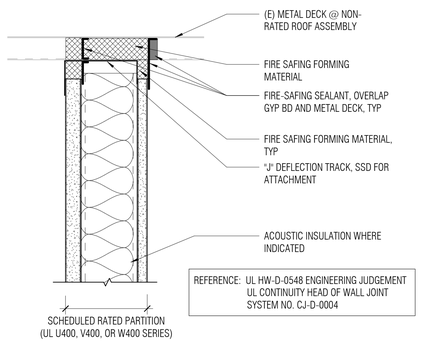

14 A8.11.1 SHAFT WALL @ TOP (PARALLEL DECK @ (E) BEAM) REV
3" = 1'-0"

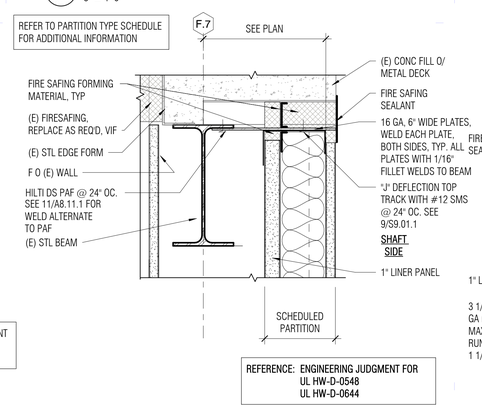

10 A8.11.1 SHAFTWALL BEAM WRAP @ BEAM INTERSECTION (PLAN)
3" = 1'-0"

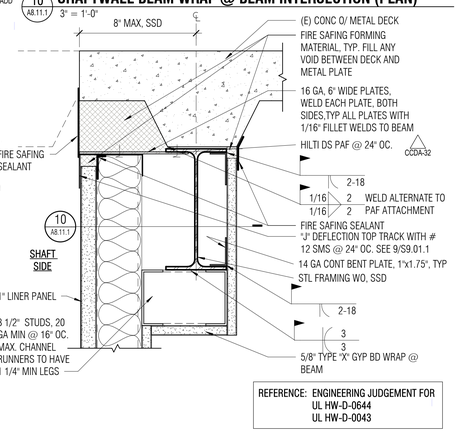

6 A8.11.1 TOP OF ACOUSTIC PARTITION
3" = 1'-0"

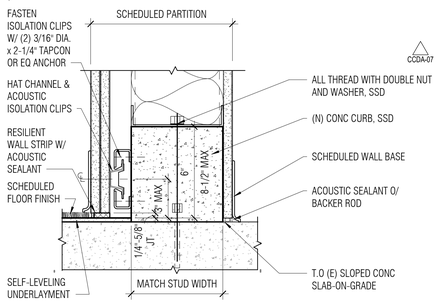

2 A8.11.1 TYPICAL PARTITION BOTTOM TRACK
3" = 1'-0"

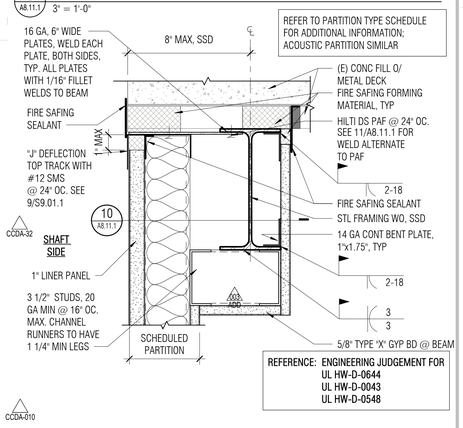

19 A8.11.1 SHAFT WALL @ NON-RATED ROOF (PERPENDICULAR TO DECK)
3" = 1'-0"

CCDA-010

15 A8.11.1 SHAFT WALL @ TOP (PERP. DECK @ (E) BEAM) REV
3" = 1'-0"

11 A8.11.1 SHAFT WALL @ TOP (PARALLEL DECK) REV
3" = 1'-0"

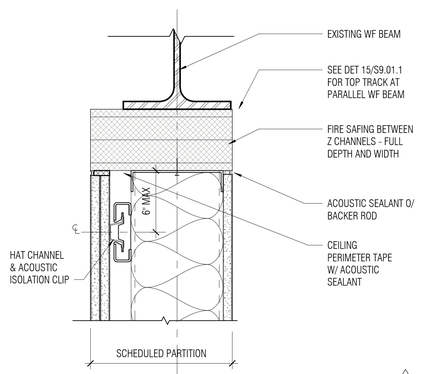

12 A8.11.1 TOP OF ACOUSTIC PARTITION AT BEAM
3" = 1'-0"

CCDA-06

7 A8.11.1 BASE OF ACOUSTIC PARTITION @ CURB
3" = 1'-0"

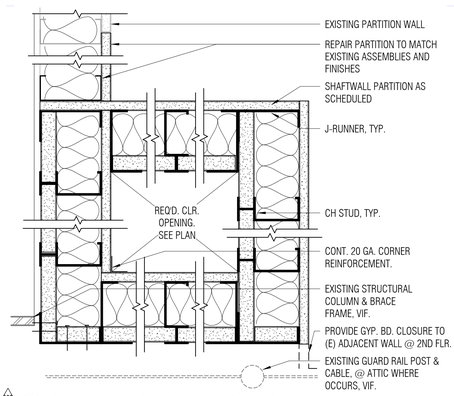

8 A8.11.1 SHAFT WALL BLIND WALL FRAMING
3" = 1'-0"

003 ADD

3 A8.11.1 SHAFT WALL @ TOP (PERPENDICULAR DECK)REV
3" = 1'-0"

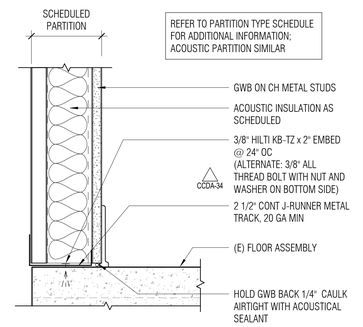

4 A8.11.1 SHAFT WALL @ BOTTOM
3" = 1'-0"

NOLL & TAM ARCHITECTS
729 Heinz Avenue
Berkeley, CA 94710
tel 510.542.2200
fax 510.542.2201

ARCHITECTS SEAL

LICENSED ARCHITECT
CHRISTOPHER NOLL
No. C15916
REN. 12-31-21
STATE OF CALIFORNIA

APPROVALS
FILE NUMBER: 07-C1
DIVISION OF THE STATE ARCHITECT
APP# 01-117630
ACS_____FLS_____SSS_____
Date:

PROJECT TITLE
CONTRA COSTA CCD
D-4002
DVC SAN RAMON CAMPUS EXPANSION & RENOVATION
1690 Watermill Rd.
San Ramon, CA 94582

ISSUE TITLE
INCREMENT 1 - RENOVATION

ISSUE DATE 4/26/19
NOLL & TAM JOB NUMBER 21630

REVISIONS

DATE	DESCRIPTION
1/30/19	BID ADDENDUM 3
4/29/19	INC1 RFI62
6/5/19	INC 1 RFI65.1
6/12/19	INC 1 RFI102.1
7/10/19	INC 1 RFI102.4
2/14/2020	INC1 RFI260
2/24/2020	INC1 RFI 273

SHEET TITLE
PARTITION TYPE DETAILS

SHEET NUMBER
A8.11.1

10/11/2021 2:36:56 PM C:\Users\phan.dung\Documents\Revit Locals\DVCSR Expansion_Central 2020_phan.dung@nollandtam.com.rvt

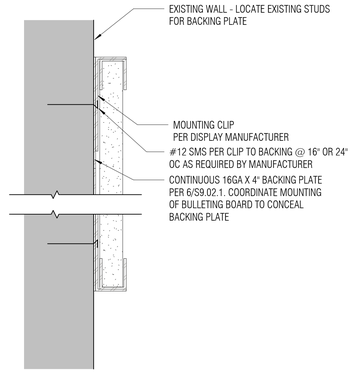

9 A8.13.1 BULLETIN BOARD
RFI39
6" = 1'-0"

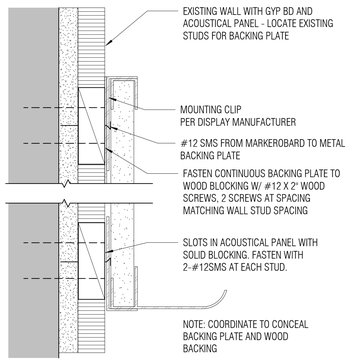

10 A8.13.1 MARKERBOARD @ ASSESSMENT LAB
RFI40
6" = 1'-0"

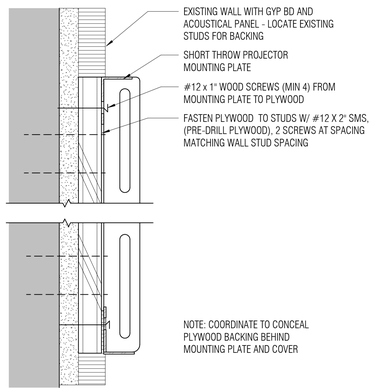

11 A8.13.1 SHORT THROW PROJECTOR MOUNT
RFI42
6" = 1'-0"

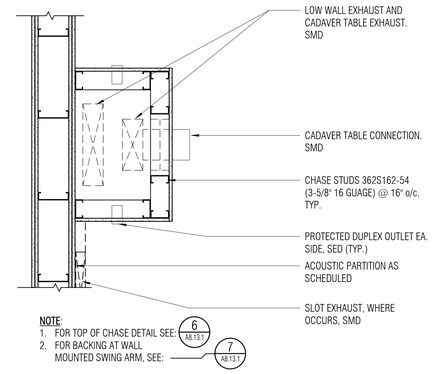

5 A8.13.1 CHASE PLAN DETAIL - @ 4' AFF
1" = 1'-0"

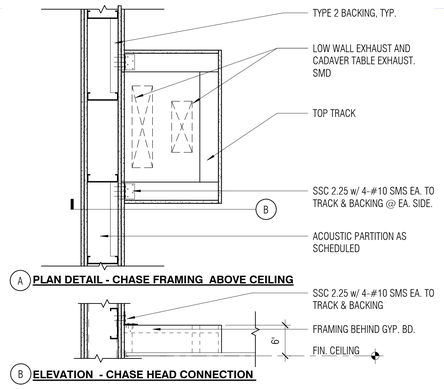

6 A8.13.1 CHASE PLAN DETAIL - ABOVE CEILING
1" = 1'-0"

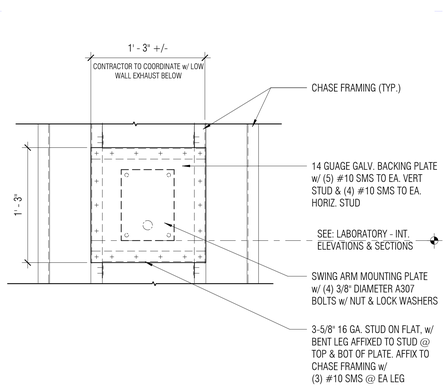

7 A8.13.1 CHASE WALL- MOUNT SWING ARM BACKING
1 1/2" = 1'-0"

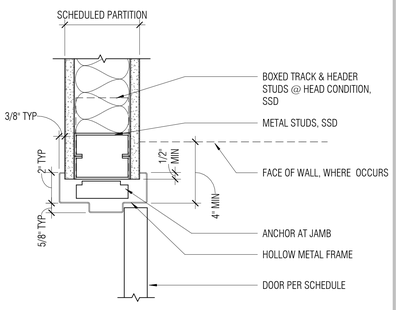

1 A8.13.1 INTERIOR HOLLOW METAL DOOR JAMB - HEAD SIM
3" = 1'-0"

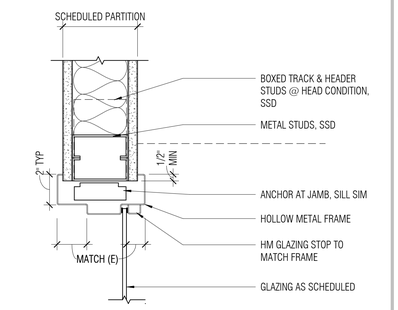

2 A8.13.1 INTERIOR HOLLOW METAL WINDOW JAMB - HEAD & SILL SIM
3" = 1'-0"

NOTE: METAL STUD & TRACK FRAMING TO MATCH PARTION GUAGE AND SIZE, UON. CONTRACTOR TO CONFIRM R.O. AND BACKING LOCATIONS WITH SPECIFED EQUIPMENT.

3 A8.13.1 FURRED WALL- SAFETY SHOWER w/ EYE WASH BACKING
1 1/2" = 1'-0"

CCDA-25

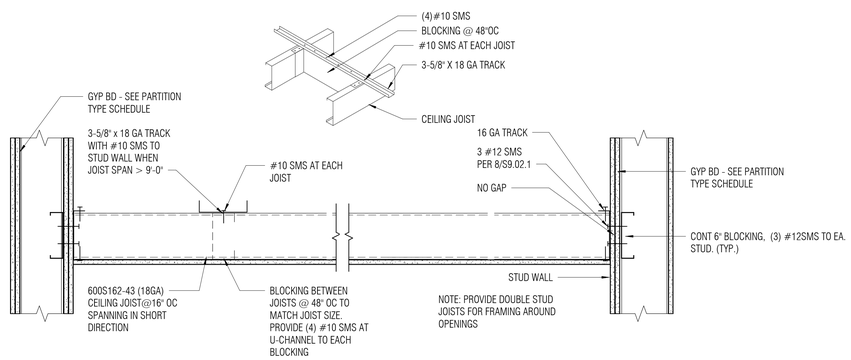

12 A8.13.1 GYP BD CEILING AT A&P 229A
1 1/2" = 1'-0"

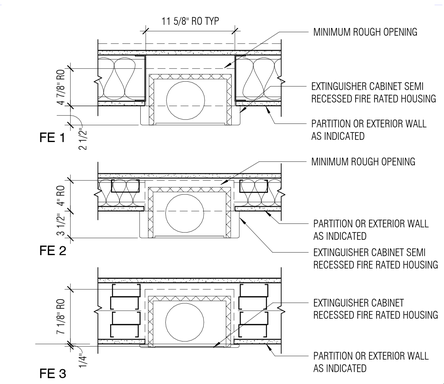

8 A8.13.1 FIRE EXTINGUISHER CABINET DETAIL
1 1/2" = 1'-0"

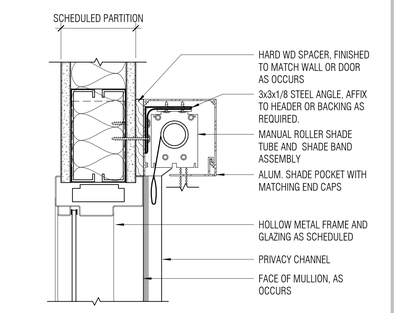

003 A2R

4 A8.13.1 PRIVACY SHADE @ INTERIOR HOLLOW METAL WINDOW
3" = 1'-0"

NOLL & TAM ARCHITECTS
729 Heinz Avenue
Berkeley, CA 94710
tel 510.542.2200
fax 510.542.2201

ARCHITECTS SEAL

LICENSED ARCHITECT
CHRISTOPHER NOLL
No. C15916
REN. 12-31-21
STATE OF CALIFORNIA

APPROVALS
FILE NUMBER: 07-C1
DIVISION OF THE STATE ARCHITECT
APP# 01-117630
ACS_____FLS_____SSS_____
Date:

PROJECT TITLE
CONTRA COSTA CCD
D-4002
DVC SAN RAMON CAMPUS EXPANSION & RENOVATION
1690 Watermill Rd.
San Ramon, CA 94582

ISSUE TITLE
INCREMENT 1 - RENOVATION

ISSUE DATE **4/26/19**
NOLL & TAM JOB NUMBER **21630**

REVISIONS

	DATE	DESCRIPTION
1	1/30/19	BID ADDENDUM 3
2	4/9/2019	INC1 RFI39
3	4/9/2019	INC1 RFI40
4	4/23/19	INC1 RFI42
5	12/17/19	INC 1 RFI221

SHEET TITLE
INTERIOR DETAILS - PARTITION FRAMING & OPENINGS

SHEET NUMBER
A8.13.1

10/11/2021 2:36:39 PM C:\Users\phan.dung\Documents\Revit Locals\DVCSR Expansion_Central 2020_phan.dung@nollandtam.com.rvt

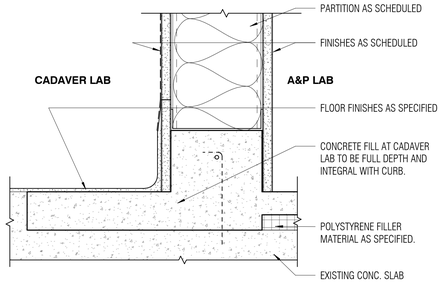

003 ADD 13 A8.21.1 **CURB @ FLOOR INFILL**
3" = 1'-0"

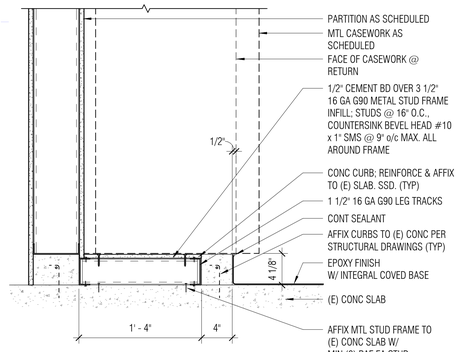

9 A8.21.1 **CURB INFILL @ MTL CASEWORK**
1 1/2" = 1'-0"

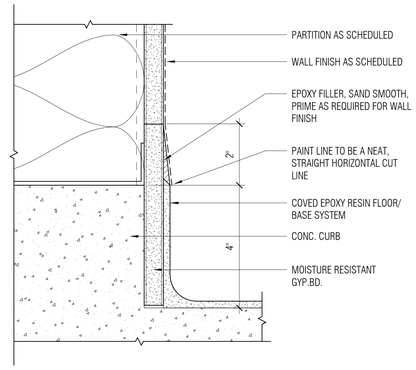

5 A8.21.1 **COVED RESIN FLOORING @ PAINTED WALL**
6" = 1'-0"

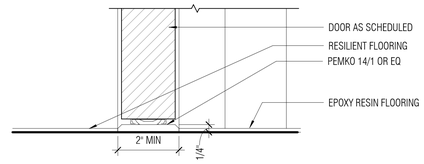

1 A8.21.1 **EPOXY RESIN/RESILIENT FLOORING**
6" = 1'-0"

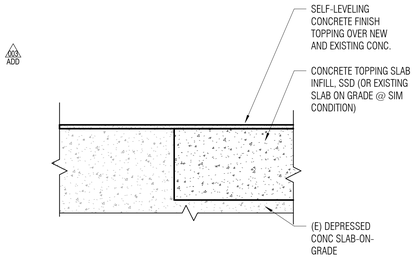

003 ADD 10 A8.21.1 **TRANSITION @ (E) CONC. TO CONC. INFILL & TOPPING**
6" = 1'-0"

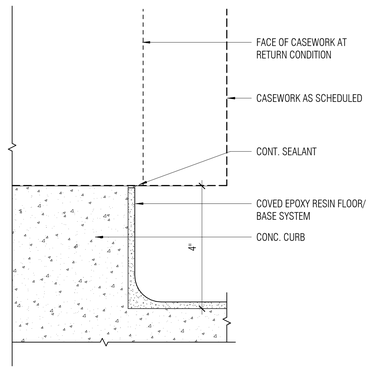

6 A8.21.1 **COVED RESIN FLOORING @ CASEWORK**
6" = 1'-0"

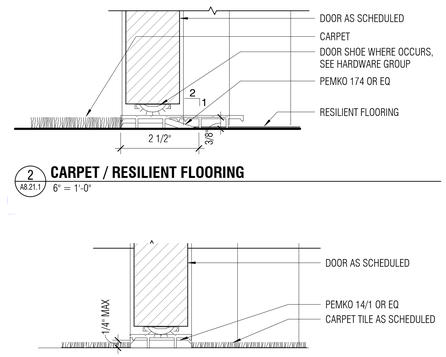

2 A8.21.1 **CARPET / RESILIENT FLOORING**
6" = 1'-0"

3 A8.21.1 **CARPET TILE / CARPET TILE FLOORING**
6" = 1'-0"

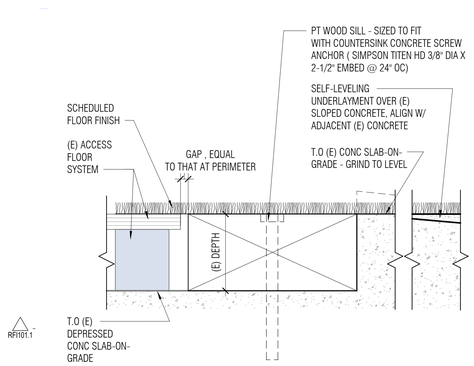

11 A8.21.1 **TRANSITION @ (E) ACCESS FLOOR**
6" = 1'-0"

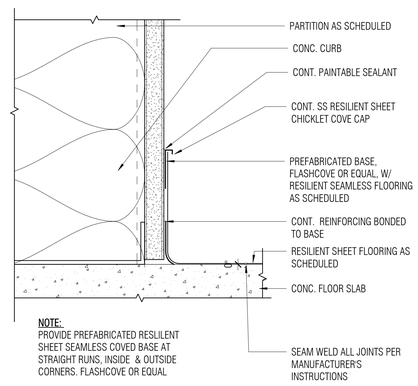

7 A8.21.1 **RESILIENT SHEET COVED BASE**
6" = 1'-0"

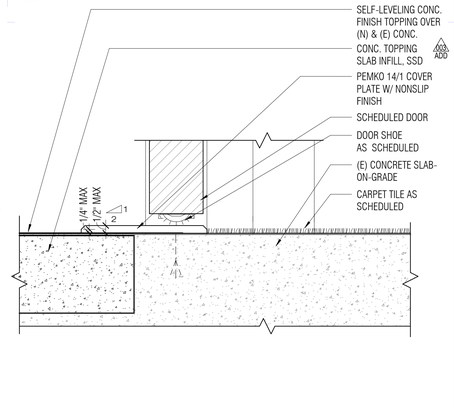

4 A8.21.1 **THRESHOLD @ (E) SPORTS FLOOR TO CARPET**
6" = 1'-0"

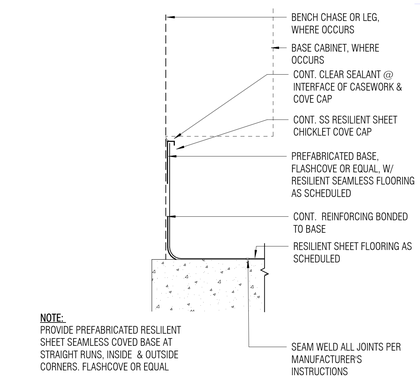

8 A8.21.1 **RESILIENT SHEET COVED BASE @ CASEWORK**
6" = 1'-0"

NOLL & TAM ARCHITECTS
729 Heinz Avenue
Berkeley, CA 94710
tel 510.542.2200
fax 510.542.2201

ARCHITECTS SEAL

LICENSED ARCHITECT
CHRISTOPHER NOLL
No. C15916
REN. 12-31-21
STATE OF CALIFORNIA

APPROVALS
FILE NUMBER: 07-C1
DIVISION OF THE STATE ARCHITECT
APP# 01-117630
ACS_____FLS_____SSS_____
Date:

PROJECT TITLE
CONTRA COSTA CCD
D-4002
DVC SAN RAMON CAMPUS EXPANSION & RENOVATION
1690 Watermill Rd.
San Ramon, CA 94582

ISSUE TITLE
INCREMENT 1 - RENOVATION

ISSUE DATE 4/26/19
NOLL & TAM JOB NUMBER 21630

REVISIONS

	DATE	DESCRIPTION
3	1/30/19	BID ADDENDUM 3
1	6/21/19	INC 1 RFI101.1

SHEET TITLE
INTERIOR- FLOOR DETAILS

SHEET NUMBER
A8.21.1

10/11/2021 2:36:42 PM C:\Users\phan.dung\Documents\Revit Local\DVCSR Expansion_Central 2020_phan.dung@nollandtam.com.rvt

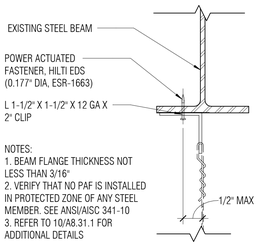

13 A8.31.1 HANGER WIRE CONNECTION TO STRUCTURAL STEEL
N.T.S

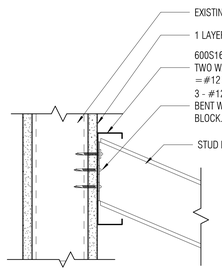

BRACE CONNECTION TO SHEATHED STUD

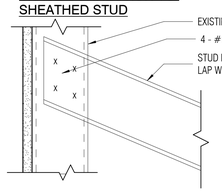

BRACE CONNECTION TO WALL STUD

17 A8.31.1 BRACE CONNECTION TO METAL STUD WALL
N.T.S

CCDA-014

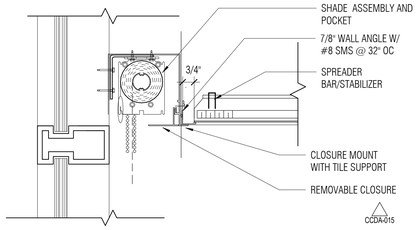

OPTION 1

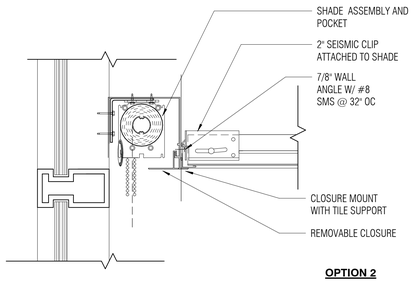

OPTION 2

18 A8.31.1 WINDOW SHADE SECTION_CEILING PERIMETER
3" = 1'-0"

CCDA-27

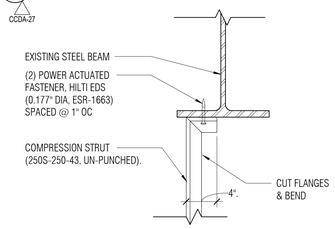

CCDA-013

19 A8.31.1 STUD CONNECTION TO STRUCTURAL STEEL
N.T.S

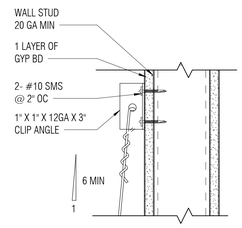

OPTION 1

NOTE:
1. THIS DETAIL IS APPLIED FOR PERIMETER WIRE DETAIL OR WHERE OBSTRUCTION PREVENTS ATTACHMENT TO STRUCTURE ABOVE

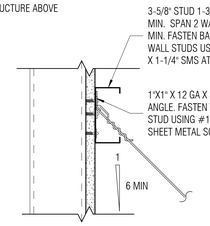

SOURCE:
DSA IR 25-2.13
SHEET NO: 4.24

OPTION 2

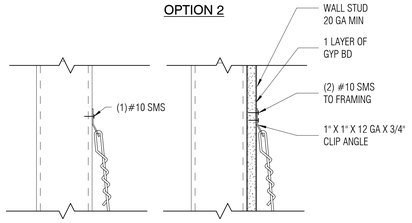

OPTION 3

A. DIRECT (FOR NOTES, SEE B. THRU GYP BD

B. THRU GYP BD

14 A8.31.1 R-HANGER WIRE CONNECTION TO METAL STUD WALL
N.T.S

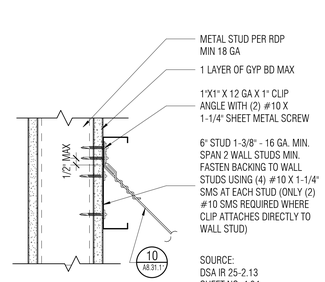

SOURCE:
DSA IR 25-2.13
SHEET NO: 4.34

15 A8.31.1 R-BRACING WIRE CONNECTION TO METAL STUD WALL
N.T.S

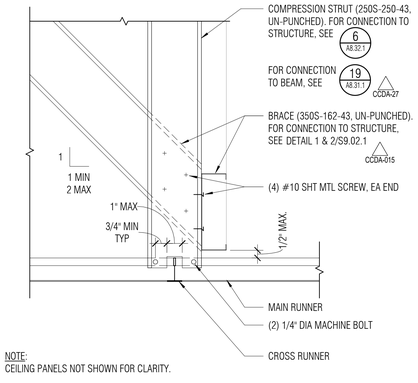

NOTE:
CEILING PANELS NOT SHOWN FOR CLARITY.

16 A8.31.1 SUSPENDED CEILING STUD TYPE STRUT/ BRACING
3" = 1'-0"

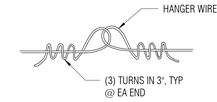

HANGER WIRE ONLY

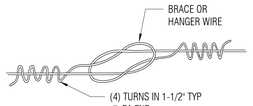

HANGER OR BRACE WIRE

NOTES:
WIRE SPLICES ARE SHOWN LOOSELY TIED FOR ILLUSTRATIVE PURPOSES ONLY AND SHALL BE DRAWN TIGHT TO COMPLETE INSTALLATION WHEN CONSTRUCTED.

SOURCE:
DSA IR 25-2.13
SHEET NO: 6.10

9 A8.31.1 CEILING WIRE SPLICES
NTS

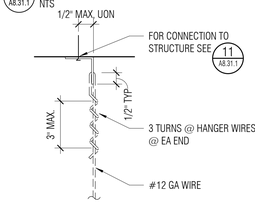

HANGER WIRE

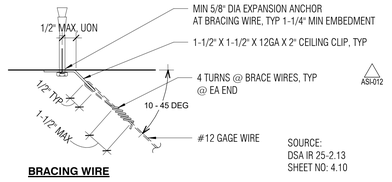

BRACING WIRE

SOURCE:
DSA IR 25-2.13
SHEET NO: 4.10

10 A8.31.1 TYP WIRE TURNS @ HANGER & BRACING WIRE CONNECTION
NTS

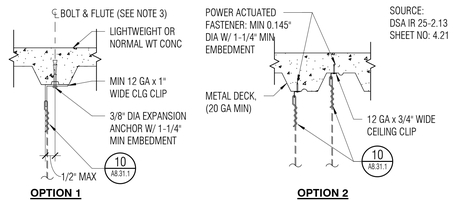

SOURCE:
DSA IR 25-2.13
SHEET NO: 4.21

NOTES:
1. FOR ADDITIONAL DETAILS, SEE1O / A8.31.1
2. POST INSTALLED ANCHORS TO BE PLACED NO MORE THAN 1" OFFSET FROM CENTERLINE OF DECK LOW FLUTE.
3. POST-INSTALLED ANCHORS IN CONCRETE USED TO SUPPORT HANGER WIRES SHALL BE TESTED AT A FREQUENCY OF 10 PERCENT. POWER ACTUATED FASTENERS IN CONCRETE SHALL BE FIELD TESTED FOR 200 LBS IN TENSION. ALL OTHER POST-INSTALLED ANCHORS IN CONCRETE SHALL BE TESTED IN ACCORDANCE WITH CBC SECTION 1913A.7.

11 A8.31.1 HANGER WIRE CONNECTION TO CONC OVER MTL DECK
NTS

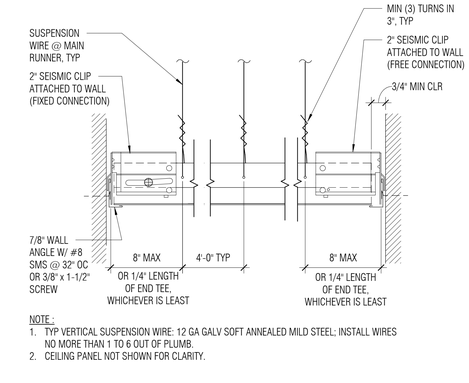

NOTE :
1. TYP VERTICAL SUSPENSION WIRE: 12 GA GALV SOFT ANNEALED MILD STEEL; INSTALL WIRES NO MORE THAN 1 TO 6 OUT OF PLUMB.
2. CEILING PANEL NOT SHOWN FOR CLARITY.

12 A8.31.1 SUSPENDED ACOUSTICAL CEILING PERIMETER (SEISMIC CLIP)
NTS

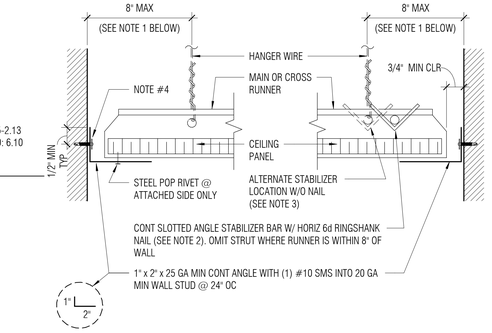

ATTACHED JOINT

SOURCE :
DSA IR 25-2.13
SHEET NO: 2.60

FREE JOINT

NOTES:
1. PROVIDE #12 GA HANGER WIRES AT THE ENDS OF ALL MAIN AND CROSS RUNNERS WITHIN 8" OF THE SUPPORT OR WITHIN ONE-FOURTH (1/4) OF THE LENGTH OF THE END TEE, WHICHEVER IS LESS, FOR THE PERIMETER OF THE CEILING AREA. PERIMETER WIRES ARE NOT REQUIRED WHEN THE LENGTH OF THE END TEE IS 8" OR LESS.
2. NAILS AT ENDS OF HORIZONTAL STABILIZERS ARE TO BE PLACED WITH NAIL HEAD TOWARD CENTER LINE OF SPAN OF STRUT.
3. STABILIZER BAR MAY BE SLOTTED APPROVED ANGLES OR CHANNELS WITH "DIAMOND POINTS" OF SPRING STEEL WHICH SNAP TIGHT TO PREVENT MOVEMENT OF STRUT.
4. (1) #10 SMS TO 20 GA MIN WALL STUD @ 24" OC.

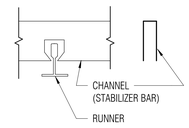

APPROVED STABILIZER
(SEE NOTE 3)

6 A8.31.1 SUSPENDED ACOUSTICAL CEILING PERIMETER DETAIL
NTS

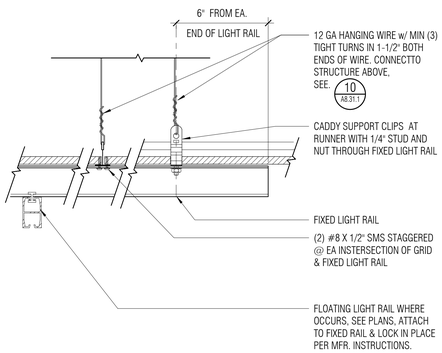

5 A8.31.1 LIGHT RAIL @ SUSPENDED CEILING
3" = 1'-0"

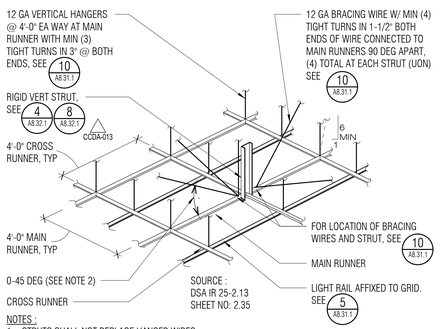

NOTES :
1. STRUTS SHALL NOT REPLACE HANGER WIRES.
2. THE MINIMUM ACCEPTABLE ANGLE IS DETERMINED SUCH THAT THE WIRES DO NOT INTERFERE WITH THE RUNNERS, LIGHT FIXTURES, ETC AND REMAIN STRAIGHT AND UNOBSTRUCTED

8 A8.31.1 SUSPENSION & BRACING ASSEMBLY AT LIGHT RAILS
NTS

SUSPENDED ACOUSTICAL CEILING GENERAL NOTES

1. DETAILS APPLY TO FLAT AND LEVEL CEILING SYSTEMS WHOSE TOTAL WEIGHT (INCLUDING CEILING MOUNTED AIR TERMINALS, SERVICES AND LIGHT FIXTURES) DOES NOT EXCEED 4 PSF.
2. EXPANSION JOINTS SHALL BE PROVIDED IN THE CEILING INTERSECTIONS OF CORRIDORS AND JUNCTIONS OF CORRIDORS WITH LOBBIES OR OTHER SIMILAR AREAS.
3. FOR CEILING AREAS EXCEEDING 2,500 SQ FT A SEISMIC SEPARATION JOINT SHALL BE PROVIDED TO DIVIDE THE CEILING INTO AREAS NOT EXCEEDING 2,500 SQ FT.
4. PENETRATIONS THORUGH THE CEILING FOR SPRINKLER HEADS AND OTHER SIMILAR DEVICES THAT ARE NOT INTEGRALLY TIED TO THE CEILING SYSTEM IN THE LATERAL DIRECTION SHALL HAVE A 2" OVERSIZE RING, SLEEVE, OR ADAPTER THROUGH THE CEILING TILE TO ALLOW FREE MOVEMENT OF 1" IN ALL HORIZONTAL DIRECTIONS.
5. SUPPORT SURFACE MOUNTED LIGHT FIXTURES BY AT LEAST 2 POSITIVE DEVICES WHICH SURROUND THE CEILING RUNNER AND WHICH ARE EACH SUPPORTED FROM THE STRUCTURE ABOVE BY #12 GAGE WIRE. SRPING CLIPS OR CLAMPS THAT CONNECT ONLY TO THE RUNNER ARE NOT ACCPETABLE. PROVIDE ADDITIONAL SUPPORTS WHEN LIGHT FIXTURES ARE 8 FT OR LONGER. MAXIMUM SPACING BETWEEN SUPPORTS SHALL NOT EXCEED 8 FT.
6. SUPPORT PENDANT MOUNTED LIGHT FIXTURES DIRECTLY FROM THE STRUCTURE ABOVE WITH HANGER WIRES OR CABLES PASSING THROUGH EACH PENDANT HANGER AND CAPABLE OF SUPPORTING 2 TIMES THE WEIGHT OF THE FIXTURE. A BRACING ASSEMBLY IS REQUIRED WHERE THE PENDANT HANGER PENETRATES THE CEILING. SPECIAL DETAILS ARE REQUIRED TO ATTACH THE PENDANT HANGER TO THE BRACING ASSEMBLY TO TRANSMIT HORIZONTAL FORCE. IF THE PENDANT MOUNTED LIGHT FIXTURE IS DIRECTLY AND INDEPENDENTLY BRACED BELOW THE CEILING (FOR EXAMPLE, AIRCRAFT CABLES TO WALLS) THEN BRACE ASSEMBLY IS NOT REQUIRED ABOVE THE CEILING.

1 A8.31.1 SUSPENDED ACOUSTICAL CEILING GENERAL NOTES
3" = 1'-0"

NOTE:
1. PLAN SCHEMATIC ONLY - SEE RCP FOR CEILING LAYOUT.
2. BRACING WIRES AND COMPRESSION STRUT SHALL OCCUR AT EVERY 144 SQ FT MAX IN ROOMS OVER 144 SQ FT.
3. WHERE PERIMETER SEISMIC CLIPS ARE USED, STABILIZER BARS ARE NOT REQUIRED.
4. FOR COMPRESSION STRUTS REFER TO SHEET A8.32.1

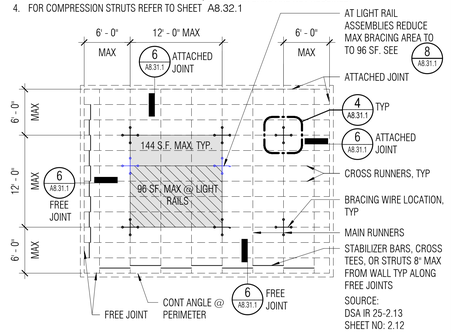

2 A8.31.1 1ST FLR. - TYP CEILING PLAN - 12' X 12' BRACE ASSEMBLY
NTS

NOTE:
1. PLAN SCHEMATIC ONLY - SEE RCP FOR CEILING LAYOUT.
2. BRACING WIRES AND COMPRESSION STRUT SHALL OCCUR AS INDICATED BELOW IN ALL ROOMS OVER 144 SQ FT.
3. WHERE PERIMETER SEISMIC CLIPS ARE USED, STABILIZER BARS ARE NOT REQUIRED.
4. FOR COMPRESSION STRUTS REFER TO SHEET A8.32.1

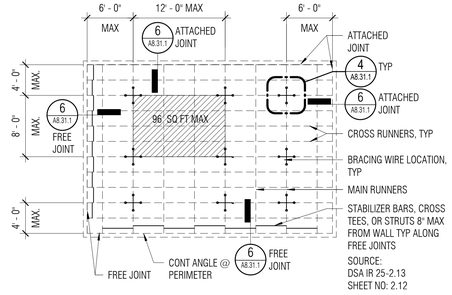

3 A8.31.1 2ND FLR. - TYP CEILING PLAN - 8' X 12' BRACE ASSEMBLY
NTS

NOTES :
1. STRUTS SHALL NOT REPLACE HANGER WIRES.
2. THE MINIMUM ACCEPTABLE ANGLE IS DETERMINED SUCH THAT THE WIRES DO NOT INTERFERE WITH THE RUNNERS, LIGHT FIXTURES, ETC AND REMAIN STRAIGHT AND UNOBSTRUCTED
3. FOR 2'X2 GRID, ADD ADDITIONAL RUNNERS EVERY 2'

4 A8.31.1 TYP. SUSPENDED CEILING- SUSPENSION & BRACING ASSEMBLY
NTS

NOLL & TAM ARCHITECTS
729 Heinz Avenue
Berkeley, CA 94710
tel 510.542.2200
fax 510.542.2201

ARCHITECTS SEAL

LICENSED ARCHITECT
CHRISTOPHER NOLL
No. C15916
REN. 12-31-21
STATE OF CALIFORNIA

APPROVALS
FILE NUMBER: 07-C1
DIVISION OF THE STATE ARCHITECT
APP# 01-117630
ACS_____FLS_____SSS_____
Date:

PROJECT TITLE
CONTRA COSTA CCD
D-4002
DVC SAN RAMON CAMPUS EXPANSION & RENOVATION
1690 Watermill Rd.
San Ramon, CA 94582

ISSUE TITLE
INCREMENT 1 - RENOVATION

ISSUE DATE	4/26/19
NOLL & TAM JOB NUMBER	21630

REVISIONS

DATE	DESCRIPTION
8/9/19	INC 1
8/19/19	INC 1
8/23/19	INC 1
8/29/19	ASI 012
1/9/20	INC 1 RFI235
1/29/20	INC 1 RFI256
4/17/20	INC1 RFI 283

SHEET TITLE
INTERIOR CEILING DETAILS

SHEET NUMBER
A8.31.1

10/17/2021 2:36:46 PM C:\Users\phan.dung\Documents\Revit Local\DVCSR Expansion_Central 2020_phan.dung@nollandtam.com.rvt

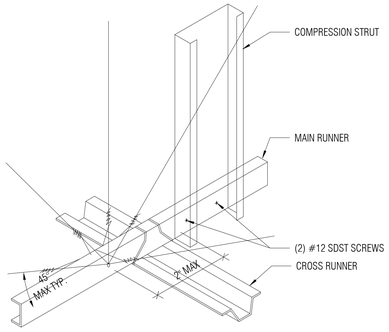

7 A8.32.1 SUSPENDED GYP BD CEILING-COMPRESSION STRUT
3" = 1'-0"

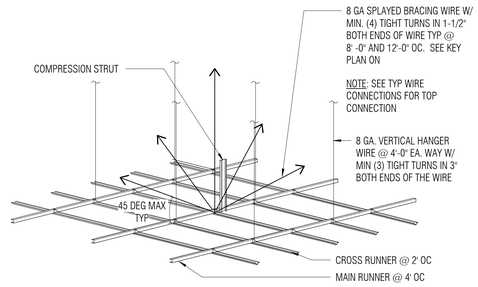

5 A8.32.1 SUSPENDED GYP BD CEILING GRID SUPPORT
NTS

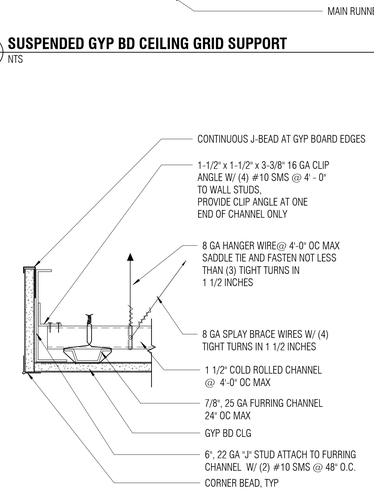

3 A8.32.1 TYPICAL SUSPENDED GYP BD CEILING DETAIL - FASCIA EDGE
3" = 1'-0"

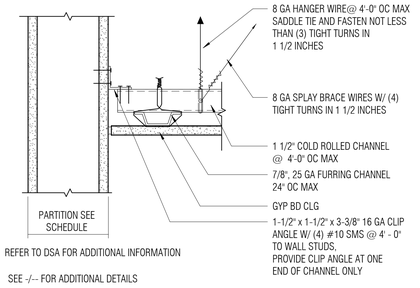

1 A8.32.1 SUSPENDED GYP BD CEILING DETAIL - FIXED EDGE
3" = 1'-0"

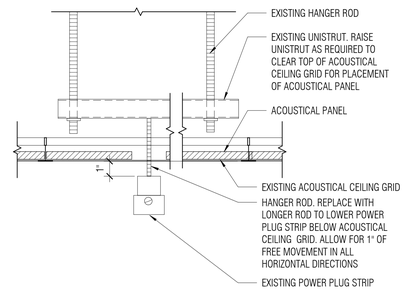

10 A8.32.1 EXISTING TRAPEZE HANGER AT ACOUSTICAL CEILING
3" = 1'-0"

ASI-011

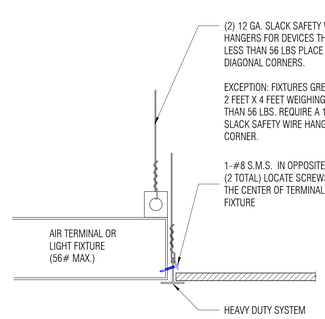

11 A8.32.1 SUSPENDED ACOUSTICAL CEILING - LIGHT FIXTURE SUPPORT
3" = 1'-0"

SUSPENDED GYP BOARD CEILING GENERAL NOTES

1. GENERAL: GYP BOARD SUSPENDED CEILING SYSTEMS SHOULD BE DESIGNED AND CONSTRUCTED IN ACCORDANCE WITH PROVISIONS OF TITLE 24, CCR, AND THE FOLLOWING INTERPRETATIONS MAY BE USED AS ADDITIONAL GUIDELINES.
2. MATERIALS: MATERIALS ARE TO COMPLY WITH APPLICABLE **UBC STANDARDS**. GYPSUM BOARD IS ONE LAYER OF 5/8".
3. DESIGN: FOR LATERAL LOAD, **REFER TO CBC, SECTION 1632A.** THE WEIGHT OF THE SUSPENDED CEILING SHALL BE ASSUMED TO BE AT LEAST FOUR POUNDS/S.F. FOR DESIGN PURPOSES.
4. GYP BOARD CEILINGS SHALL NOT SUPPORT MATERIALS OR BUILDING COMPONENTS OTHER THAN GRILLES, LIGHT FIXTURES, SMALL ELECTRICAL CONDUITS, SMALL DUCTS AND THE LIKE. ALL SUCH COMPONENTS SHALL BE SUPPORTED EITHER DIRECTLY FROM MAIN RUNNERS, OR BY SUPPLEMENTAL FRAMING WHICH IS SUPPORTED BY MAIN RUNNERS. NO VERTICAL LOADS OTHER THAN GYP. BOARD DEAD LOAD SHALL BE APPLIED TO CROSS-FURRING.
5. THERE ARE MANY POSSIBLE VARIATIONS OF HANGER AND MAIN RUNNER SIZES AND SPACINGS LISTED IN **TABLE NO. 25-A CBC,** AND ALL OF THE COMBINATIONS ARE ACCEPTABLE. HOWEVER, BOTH HANGERS AND MAIN RUNNERS ARE MOST FREQUENTLY SPACED AT 4'-0" OC. THIS IS ACCEPTABLE PROVIDED THE FOLLOWING REQUIREMENTS ARE MET: (1) VERTICAL HANGER WIRES ARE NO. 8 GAUGE AND GALVANIZED. (2) MAIN RUNNERS ARE 1 1/2" HOT-ROLLED CHANNELS, 1.12#/FT MINIMUM. (3) CROSS-FURRING MAY BE 7/8", 20 GAUGE GALVANIZED HAT SECTIONS AT 24" MAXIMUM O.C.
6. HANGERS SHOULD BE SADDLE-TIED AROUND MAIN RUNNERS TO DEVELOP THE FULL STRENGTH OF THE HANGERS.
7. CROSS-FURRING SHOULD BE SADDLE-TIED TO THE MAIN RUNNERS WITH ONE STRAND OF NO. 16 OR TWO STRANDS OF NO. 18 GAUGE TIE WIRE.
8. MAIN RUNNERS SHOULD BE SPLICED BY LAPPING AND INTERLOCKING FLANGES 12" MINIMUM AND TYING NEAR EACH END WITH DOUBLE LOOPS OF NO. 16 GAUGE WIRE.
9. CROSS-FURRING SHOULD BE SPLICED BY LAPPING AND INTERLOCKING THE PIECES 8" MINIMUM AND TYING NEAR EACH END WITH DOUBLE LOOPS OF NO. 16 GAUGE WIRE.
10. PROVIDE TRAPEZE OR OTHER SUPPLEMENTARY SUPPORT MEMBERS AT OBSTRUCTIONS TO TYPICAL HANGER SPACING. PROVIDE ADDITIONAL HANGERS, STRUTS OR BRACES AS REQUIRED AT ALL CEILING BREAKS, SOFFITS OR DISCONTINUOUS AREA. HANGER WIRES THAT ARE MORE THAN 1 IN 6 OUT OF PLUMB ARE TO HAVE COUNTER-SLOPING WIRES.
11. FASTEN HANGER WIRES WITH NOT LESS THAN 3 TIGHT TURNS. FASTEN BRACING WIRES WITH 4 TIGHT TURNS. MAKE ALL TIGHT TURNS WITHIN A DISTANCE OF 1 1/2 INCHES. HANGER OR BRACING WIRE ANCHORS TO THE STRUCTURE SHOULD BE INSTALLED IN SUCH A MANNER THAT THE DIRECTION OF THE WIRE ALIGNS AS CLOSELY AS POSSIBLE WITH THE DIRECTION OF THE FORCES ACTING ON THE WIRE. NOTE: WIRE TURNS MADE BY MACHINE WHERE BOTH STRANDS HAVE BEEN DEFORMED OR BENT IN WRAPPING CAN WAIVE THE 1 1/2" REQUIREMENT, BUT THE NUMBER OF TURNS SHOULD BE MAINTAINED, AND BE AS TIGHT AS POSSIBLE.
12. SEPARATE ALL CEILING HANGING AND BRACING WIRES AT LEAST 6 INCHES FROM ALL UNBRACED DUCTS, PIPES, CONDUIT, ETC. IT IS ACCEPTABLE TO ATTACH LIGHTWEIGHT ITEMS, SUCH AS SINGLE ELECTRICAL CONDUIT NOT EXCEED 3/4" NOMINAL DIAMETER, TO HANGER WIRES USING **CONNECTORS ACCEPTABLE TO DSA.**
13. ALL RECESSED OR DROP-IN LIGHT FIXTURES, CEILING MOUNTED MECHANICAL AIR TERMINALS & SERVICES SHALL BE SUPPORTED DIRECTLY BY MAIN RUNNERS OR BY SUPPLEMENTAL FRAMING WHICH IS SUPPORTED BY MAIN RUNNERS, AND POSITIVELY ATTACHED WITH SCREWS OR OTHER APPROVED CONNECTORS.
14. SURFACE MOUNTED FIXTURES SHALL BE ATTACHED TO A MAIN RUNNER WITH A POSITIVE CLAMPING DEVICE MADE OF MATERIAL WITH A MINIMUM OF 14 GAUGE. ROTATIONAL SPRING CLAMPS DO NOT COMPLY.
15. SEISMIC BRACE TO CEILING ABOVE AS FOR ACOUSTICAL TILE SUSPENSION SYSTEM. (SEE SUSPENDED LAY-IN CLG NOTE #6), EXCEPT USE #8 DIAGONAL WIRES SPACED ON A 12' X 12' GRID WITHIN 6'-0" OF WALLS. SEISMIC BRACE TO BE LOCATED AT INTERSECTION OF MAIN RUNNER AND CROSS-FURRING MEMBER. PROVIDE CONNECTION BETWEEN DIAGONAL WIRES AND MAIN RUNNER SO AS TO PREVENT SLIPPING FOR A 200# APPROXIMATE SEISMIC LOAD.
16. CEILING GRID MEMBERS MAY BE ATTACHED TO NOT MORE THAN 2 ADJACENT WALLS, AND SHALL BE AT LEAST 1/2" FREE OF OTHER WALLS.

9 A8.32.1 SUSPENDED GYP BD CEILING NOTES
3" = 1'-0"

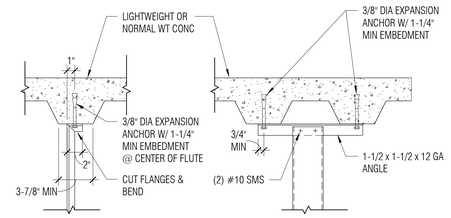

CHANNEL STRUT

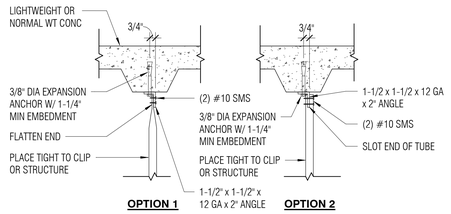

TUBE STRUT

SOURCE:
DSA IR 25-2.13
SHEET NO: 5.21

NOTES:
1. POST-INSTALLED ANCHORS TO BE PLACED NO MORE THAN 1" OFFSET FROM CENTERLINE OF DECK LOW FLUTE.
2. POST-INSTALLED ANCHORS IN CONCRETE USED TO SUPPORT HANGER WIRES SHALL BE TESTED AT A FREQUENCY OF 10 PERCENT. POWER ACTUATED FASTENERS IN CONCRETE SHALL BE FIELD TESTED FOR 200 LBS IN TENSION. ALL OTHER POST-INSTALLED ANCHORS IN CONCRETE SHALL BE TESTED IN ACCORDANCE WITH CBC SECTION 1913A.7.

6 A8.32.1 STRUT CONNECTION TO CONC OVER MTL DECK
NTS

EMT COMPRESSION STRUT	MAXIMUM LENGTH
1/2" DIAMETER EMT (0.042" WALL THICKNESS)	3'-11"
3/4" DIAMETER EMT (0.049" WALL THICKNESS)	6'-4"
1" DIAMETER EMT (0.057" WALL THICKNESS)	9'-9"
1-1/4" DIAMETER EMT (0.065" WALL THICKNESS)	12'-9"
1-1/2" DIAMETER EMT (0.065" WALL THICKNESS)	14'-9"
2" DIAMETER EMT (0.065" WALL THICKNESS)	18'-10"

CHANNEL COMPRESSION STRUT	MAXIMUM LENGTH
2-1/2" STUD W/ 1-1/4" FLANGE - 20 GA	5'-0"
2-1/2" STUD W/ 1-3/8" FLANGE - 20 GA	6'-10"
3-5/8" STUD W/ 1-3/8" FLANGE - 20 GA	8'-0"
2-1/2" STUD W/ 1-3/8" FLANGE - 18 GA	8'-10"
4" STUD W/ 1-3/8" FLANGE - 18 GA	10'-10"

NOTE:
1. LATERAL FORCE BRACING MEMBERS SHALL BE SPACED A MINIMUM OF 6" FROM ALL HORIZONTAL PIPING OR DUCT WORK THAT IS NOT PROVIDED WITH BRACING RESTRAINTS FOR HORIZONTAL FORCES. BRACING WIRES SHALL BE ATTACHED TO THE GRID AND TO THE STRUCTURE IN SUCH A MANNER THAT THEY CAN SUPPORT A DESIGN LOAD OF NOT LESS THAN 200 POUNDS OR THE ACTUAL LOAD, WHICHEVER IS GREATER, WITH A SAFETY FACTOR OF 2.
2. REFERENCE IR-25-2 FOR TESTING REQUIREMENTS.

SOURCE :
DSA IR 25 - 2.13
SHEET NO: 3.21

TESTING REQUIREMENTS:
WHEN DRILLED-IN CONCRETE ANCHORS OR SHOT-IN ANCHORS ARE USED IN REINFORCED CONCRETE FOR HANGER WIRES, 1 OUT OF 10 WIRE/ANCHOR ASSEMBLIES MUST BE FIELD TESTED FOR 200 LBS IN TENSION. WHEN DRILLED-IN CONCRETE ANCHORS ARE USED FOR BRACING WIRES, 1 OUT OF 2 WIRE/ANCHOR ASSEMBLIES MUST BE FIELD TESTED FOR 440 LBS IN TENSION IN THE DIRECTION OF THE WIRE. SHOT-IN ANCHORS IN CONCRETE ARE NOT PERMITTED FOR BRACING WIRES (REFERENCE IR 25-2.13).

2 A8.32.1 COMPRESSION STRUT TABLE
NTS

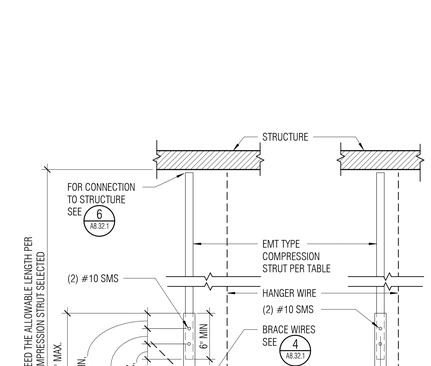

SOURCE :
DSA IR 25-2.13
SHEET NO: 3.20

NOTE: CEILING PANELS NOT SHOWN FOR CLARITY

8 A8.32.1 SUSPENDED ACOUSTICAL CEILING EMT TYPE STRUT
NTS

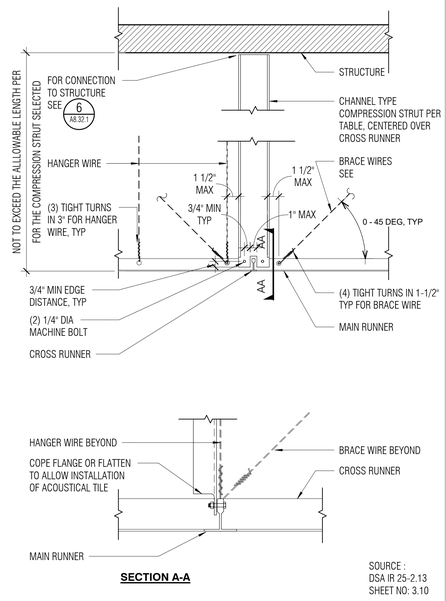

SOURCE :
DSA IR 25-2.13
SHEET NO: 3.10

NOTE:
1. LATERAL BRACING SHALL CONSIST OF (4) 12 GA WIRES AND COMPRESSION STRUT SECURED TO MAIN RUNNER WITHIN 2" OF CROSS RUNNER INTERSECTION. WIRES SHALL BE SPLAYED 90 DEG IN PLAN FROM EACH OTHER AND AT AN ANGLE NOT EXCEEDING 45 DEG FROM PLANE OF CEILING.
2. CEILING PANELS NOT SHOWN FOR CLARITY.

4 A8.32.1 SUSPENDED ACOUSTICAL CEILING CHANNEL TYPE STRUT
NTS

NOLL & TAM ARCHITECTS
729 Heinz Avenue
Berkeley, CA 94710
tel 510.542.2200
fax 510.542.2201

ARCHITECTS SEAL

LICENSED ARCHITECT
CHRISTOPHER NOLL
No. C15916
REN. 12-31-21
STATE OF CALIFORNIA

APPROVALS
FILE NUMBER: 07-C1
DIVISION OF THE STATE ARCHITECT
APP# 01-117630
ACS_____FLS_____SSS_____
Date:

PROJECT TITLE
CONTRA COSTA CCD
D-4002
DVC SAN RAMON CAMPUS EXPANSION & RENOVATION
1690 Watermill Rd.
San Ramon, CA 94582

ISSUE TITLE
INCREMENT 1 - RENOVATION

ISSUE DATE 4/26/19
NOLL & TAM JOB NUMBER 21630

REVISIONS

	DATE	DESCRIPTION
1	8/28/19	ASI 011

SHEET TITLE
INTERIOR CEILING DETAILS

SHEET NUMBER
A8.32.1

10/11/2021 2:36:50 PM C:\Users\phan.dung\Documents\Revit Locals\DVCSR Expansion_Central 2020_phan.dung@nollandtam.com.rvt

9 A8.33.1 RECESSED WALL MTD PROJECTION SCREEN
3" = 1'-0"

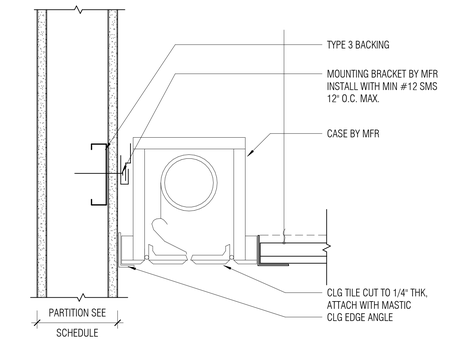

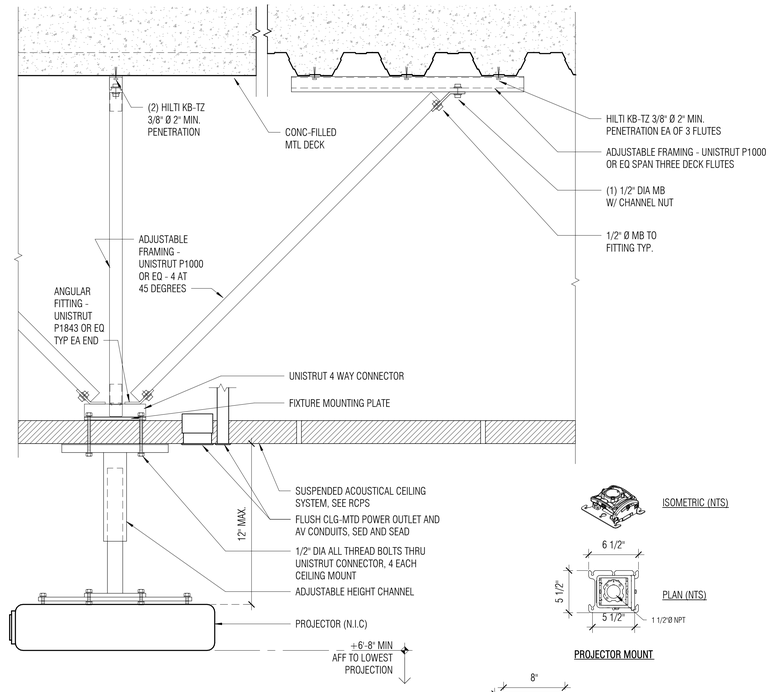

NOTE:
1. CONTRACTOR SHALL PROVIDE CEILING MOUNT, THREADED EXTENSION POLE, PROJECTOR MOUNT, AND ANCHORS. CONFIRM MODELS W/ OWNER PRIOR TO ORDERING. OWNER SHALL FURNISH AND INSTALL PROJECTOR.
2. LOCATION TO BE FINALIZED AND APPROVED IN THE FIELD BY DISTRICT AND ARCHITECT
3. PROJECTOR MOUNTS MUST BE COMPATIBLE WITH FUTURE PROJECTORS
4. STUB OUTS FOR CABLING TO BE WITHIN 12" OF PROJECTOR, AND BEHIND PROJECTOR.

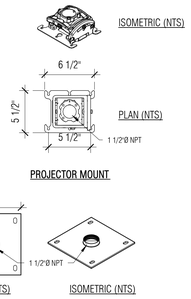

PROJECTOR MOUNT

CEILING MOUNT

1 A8.33.1 SUSPENDED PROCEDURE LIGHT AT CEILING FRAMING
1 1/2" = 1'-0"

CCDA-29

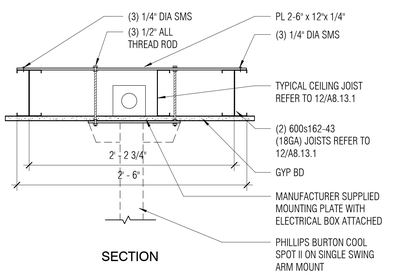

SECTION

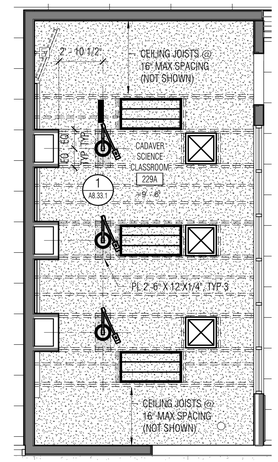

10 A8.33.1 TRAPEZE HANGER AT ACOUSTICAL CEILING
3" = 1'-0"

CCDA-34

6 A8.33.1 CEILING-MOUNTED PROJECTOR
1 1/2" = 1'-0"

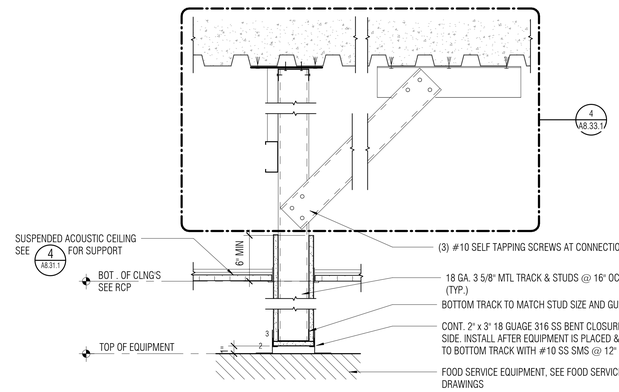

2 A8.33.1 SUSPENDED STUD CEILING - GYP BD TO ACT TRANSITOIN
1 1/2" = 1'-0"

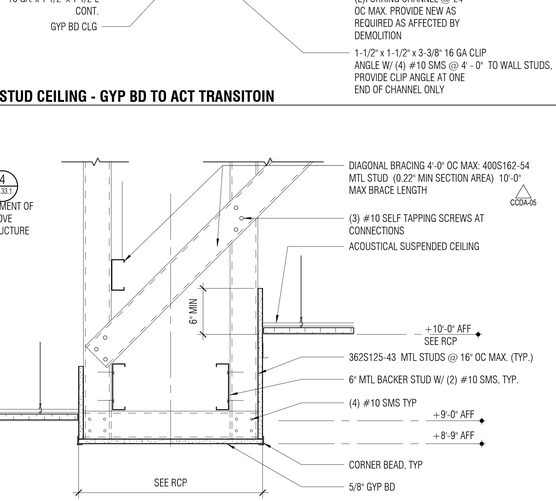

NOTE: PROVIDE MIN. 18 GUAGE STUDS, BACKERS AND TRACKS . UON.

7 A8.33.1 CEILING HUNG WALL, BETWEEN ACOUSTICAL CEILING
1 1/2" = 1'-0"

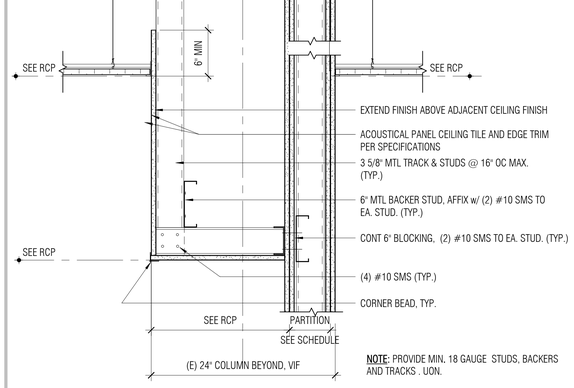

NOTE: PROVIDE MIN. 18 GUAGE STUDS, BACKERS AND TRACKS . UON.

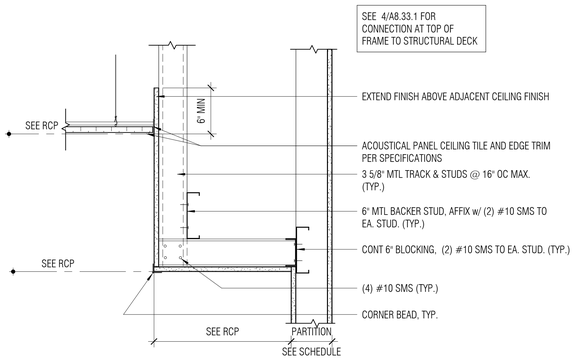

NOTE: PROVIDE MIN. 18 GUAGE STUDS, BACKERS AND TRACKS . UON.

3 A8.33.1 SUSPENDED STUD CEILING
1 1/2" = 1'-0"

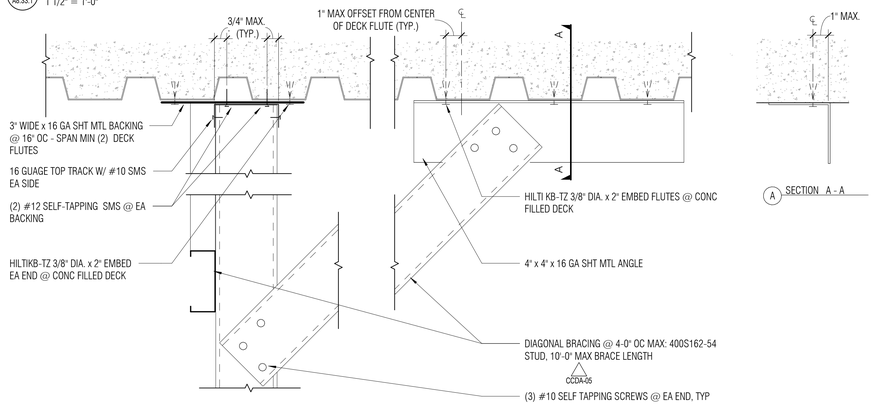

20 A8.33.1 GYPSUM BOARD SOFFIT - ASSESSMENT LAB
1 1/2" = 1'-0"

8 A8.33.1 GYPSUM BOARD SOFFIT
1 1/2" = 1'-0"

4 A8.33.1 CEILING HUNG WALL- SOFFIT - ATTACHMENT TO STRUCTURE
3" = 1'-0"

NOLL & TAM ARCHITECTS
729 Heinz Avenue
Berkeley, CA 94710
tel 510.542.2200
fax 510.542.2201

ARCHITECTS SEAL

LICENSED ARCHITECT
CHRISTOPHER NOLL
No. C15916
REN. 12-31-21
STATE OF CALIFORNIA

APPROVALS

FILE NUMBER: 07-C1

DIVISION OF THE STATE ARCHITECT
APP# 01-117630
ACS_____FLS_____SSS_____
Date:

PROJECT TITLE

CONTRA COSTA CCD
D-4002
DVC SAN RAMON CAMPUS EXPANSION & RENOVATION

1690 Watermill Rd.
San Ramon, CA 94582

ISSUE TITLE
INCREMENT 1 - RENOVATION

ISSUE DATE	4/26/19
NOLL & TAM JOB NUMBER	21630

REVISIONS

	DATE	DESCRIPTION
1	3/25/2019	INC1 RFI20
2	4/24/19	INC1 RFI56
3	1/15/20	INC1 RFI240
4	1/30/20	

SHEET TITLE
INTERIOR CEILING & SOFFIT DETAILS

SHEET NUMBER
A8.33.1

10/11/2021 2:36:54 PM C:\Users\phan.dung\Documents\Revit Locals\DVCSR Expansion_ Central 2020_phan.dung@nollandtam.com.rvt

DOOR SCHEDULE - INCREMENT 1

Door Number	Type	Door Width	Door Height	Door Thickness	Door Material	Door Finish	Fire Rating	Hardware Group	Frame Material	Frame Finish	Details Head Detail	Details Jamb Detail	Details Threshold Detail	Comments
~~103B~~	~~C~~	~~3' - 0"~~	~~7' - 0"~~	~~0' - 1 3/4"~~	~~AL~~	~~FF~~	~~NON-RATED~~	~~2.0~~	~~AL~~	~~FF~~	~~2/A6.11.1~~	~~6/A6.11.1~~	~~4/A6.11.1~~	~~PANIC HARDWARE - ACCESS CONTROL~~
105A	A	3' - 0"	7' - 0"	0' - 1 3/4"	(E) HM	-	(E) 60 MIN		(E) HM	-	-	-	-	(E) DOOR AND FRAMETO REMAIN - NO HARDWARE UPGRADE
148A	C	3' - 0"	7' - 0"	0' - 1 3/4"	AL	FF	NON-RATED	11.0	AL	FF	2/A6.11.1	6/A6.11.1	4/A6.11.1	ACCESS CONTROL
162B	B	3' - 0"	7' - 0"	0' - 1 3/4"	(E) SC	-	NON-RATED	26.0	(E) HM	-	-	-	-	HARDWARE UPGRADE - ACCESS CONTROL
164A	C	3' - 0"	7' - 0"	0' - 1 3/4"	AL	FF	NON-RATED	2.0	AL	FF	2/A6.11.1	6/A6.11.1	4/A6.11.1	PANIC HARDWARE - ACCESS CONTROL
164B	B	3' - 0"	7' - 0"	0' - 1 3/4"	(E) SC	-	NON-RATED		(E) HM	-	-	-	-	(E) DOOR AND FRAMETO REMAIN - NO HARDWARE UPGRADE
164C	C	3' - 0"	7' - 0"	0' - 1 3/4"	AL	FF	NON-RATED	2.0	AL	FF	2/A6.11.1	6/A6.11.1	4/A6.11.1	PANIC HARDWARE - ACCESS CONTROL
165A	B	3' - 0"	7' - 0"	0' - 1 3/4"	(E) SC	-	NON-RATED	13.0	(E) HM	-	-	-	-	HARDWARE UPGRADE - NO PASSAGE TO ART RM 166 - STOREROOM LOCK - ALLOW EXIT FROM ART RM 165 TO CLASSROOM 162
180A	G	6' - 0"	7' - 0"	0' - 1 3/4"	(E) HM	-	(E) 20 MIN		(E) HM	-	-	-	-	(E) DOOR AND FRAMETO REMAIN - NO HARDWARE UPGRADE
181AB	A	3' - 0"	7' - 0"	0' - 1 3/4"	HM	PTD	NON-RATED	23.0	(E) HM	-	-	-	-	NEW DOOR INTO (E) FRAME - PANIC HARDWARE WITH LOCAL BUZZER EXIT ONLY ALARM - MECHANICAL LOCK, KEYED MASTER FOR POLICE SERVICE ACCESS
181B	D	6' - 0"	7' - 0"	0' - 1 3/4"	(E) HM	-	NON-RATED	14.0	(E) HM	-	-	-	-	HARDWARE UPGRADE - (E) PANIC HARDWARE . MODIFY TO HAVE LOCAL BUZZER EXIT ONLY ALARM
~~181BA~~	~~A~~	~~3' - 0"~~	~~7' - 0"~~	~~0' - 1 3/4"~~	~~SC~~	~~-~~	~~NON-RATED~~	~~16.0~~	~~HM~~	~~PTD~~	~~1/A8.13.1 SIM~~	~~1/A8.13.1~~	~~-~~	~~STORAGE LOCK, KICKPLATE~~
~~181C~~	~~AA~~	~~3' - 0"~~	~~2' - 5"~~	~~0' - 1 3/4"~~	~~SC~~		~~NON-RATED~~							~~PART OF CUSTOM CASEWORK - SEE CASEWORK DETAIL~~
~~182A~~	~~A~~	~~3' - 0"~~	~~7' - 0"~~	~~0' - 1 3/4"~~	~~(E) SC~~	~~-~~	~~(E) 20 MIN~~		~~(E) HM~~				~~4/A8.21.1~~	~~(E) DOOR AND FRAMETO REMAIN - NO HARDWARE UPGRADE~~
~~189A~~	~~A~~	~~3' - 0"~~	~~7' - 0"~~	~~0' - 1 3/4"~~	~~(E) HM~~	~~-~~	~~(E) 45 MIN~~		~~(E) HM~~	~~-~~	~~-~~	~~-~~	~~-~~	~~(E) DOOR AND FRAMETO REMAIN - NO HARDWARE UPGRADE~~
202A	A	3' - 0"	7' - 0"	0' - 1 3/4"	(E) HM	-	NON-RATED		(E) HM	-	-	-	-	(E) DOOR AND FRAMETO REMAIN - NO HARDWARE UPGRADE
228A	F	6' - 0"	7' - 0"	0' - 1 3/4"	AL	FF	NON-RATED	19.0	AL	FF	2/A6.11.1	3/A6.11.1, 6/A6.11.1	4/A6.11.1 sim	PANIC HARDWARE - ACCESS CONTROL
229C	B	3' - 0"	7' - 0"	0' - 1 3/4"	SC	-	NON-RATED	17.0	HM	PTD	1/A8.13.1 SIM	1/A8.13.1	1/A8.21.1	ACCESS CONTROL. PROVIDE MANUAL PRIVACY SHADE w/ PRIVACY CHANNELS, DOOR BOTTOMS AND SEALS (THERMAL)
230B	A	3' - 0"	7' - 0"	0' - 1 3/4"	(E) SC	-	NON-RATED	18.0	(E) HM	-	-	-	3/A8.21.1	HARDWARE UPGRADE - PANIC HARDWARE WITH LOCAL BUZZER EXIT ONLY ALARM -MECHANICAL LOCK - KEYED MASTER FOR POLICE SERVICE ACCESS DOOR BOTTOMS AND SEALS (ACOUSTIC)
232A	A	3' - 0"	7' - 0"	0' - 1 3/4"	SC	-	NON-RATED	4.0	HM	PTD	1/A8.13.1 SIM	1/A8.13.1	2/A8.21.1	STORAGE LOCK, KICKPLATE
233A	A	3' - 0"	7' - 0"	0' - 1 3/4"	(E) HM	-	(E) 45 MIN		(E) HM	-	-	-	-	(E) DOOR AND FRAMETO REMAIN - NO HARDWARE UPGRADE

ASI-007A ASI-007A

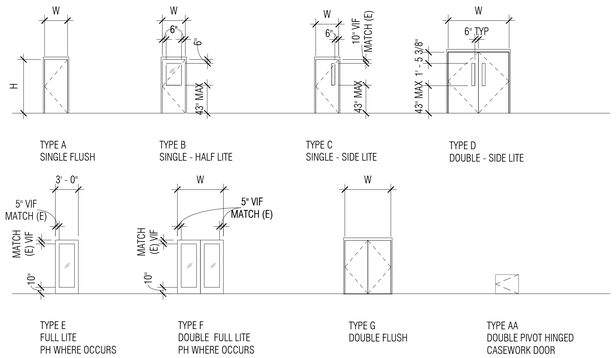

TYPE A — SINGLE FLUSH
TYPE B — SINGLE - HALF LITE
TYPE C — SINGLE - SIDE LITE
TYPE D — DOUBLE - SIDE LITE
TYPE E — FULL LITE PH WHERE OCCURS
TYPE F — DOUBLE FULL LITE PH WHERE OCCURS
TYPE G — DOUBLE FLUSH
TYPE AA — DOUBLE PIVOT HINGED CASEWORK DOOR

DOOR TYPES

DOOR GENERAL NOTES

1. FOR THRESHOLDS, MAXIMUM 1/2" HIGH ABOVE FINISH FLOOR OR LANDINGS ON BOTH SIDES AND AT ENTRANCE DOORS. CBC 11B 404.2.5 AND 11B-303.3
2. FOR DOOR CLOSERS, RESISTANCE TO PRESSURE TO BE SET AT 5 LBS FOR INTERIOR OR EXTERIOR DOORS, MAX. CBC 11B 404.2.9
3. ALL NEW DOORS TO BE EQUIPPED WITH SINGLE EFFORT, NON-GRASP HARDWARE (I.E. LEVER) CENTERED BETWEEN 34" AND 44" ABOVE THE FLOOR. CBC 11B 404.2.7
4. 10" KICKPLATE TO BE INSTALLED AT BOTTOM OF ALL NEW STOREFRONT TYPE DOORS. CBC 11B 404.2.1
5. ALL NEW DOORS THAT ARE A MINIMUM OF 36" WIDE SHALL BE REQUIRED TO HAVE A CLEAR WIDTH OF 32" WHEN FULLY OPEN. CBC 11B-404.2.3
6. DOOR HARDWARE AT EXISTING AND NEW EGRESS DOORS SHALL ALLOW DOORS TO BE READILY OPENED FROM THE EGRESS SIDE, WITHOUT THE USE OF THE KEY, SPECIAL KNOWLEDGE, OR EFFORT. CBC 1010.19
7. WITHIN 24" OF EITHER SIDE OF ANY DOOR, AND / OR WHERE THERE ARE AREAS GREATER THAN 9 SQ FT IN AREA OF GLAZING WITH A BOTTOM EDGE LESS THAN 18" ABOVE THE FLOOR AND WITHIN 36" OF A WALKING SURFACE SHALL BE SAFETY GLAZED (I.E. TEMPERED). CBC 2406.4.3 AND 2406.4.5.
8. HARDWARE AT NEW AND EXISTING DOORS IN AREA OF WORK SHALL BE COORDINATED AND REVIEWED WITH DISTRICT
9. WHERE HARDWARE MODIFICATIONS ARE PROPOSED TO EXISTING DOORS, PROVIDE FIELD VERIFICATION OF EXISTING CONDITIONS, DOOR THICKNESS, AND MATERIAL TO CONFIRM COMPATIBILITY. NOTIFY ARCHITECT OF ANY DISCREPANCIES.
10. WHERE EXISTING ALARM DEVICES/SYSTEM (BAY ALARM) ARE PRESENT AT EXISTING DOOR, THEY SHALL BE RE-INSTALLED AND MAINTAINED OPERABLE AFTER DOOR/DOOR HARDWARE MODIFICATIONS
11. EXTERIOR AND INTERIOR DOOR WITH WINDOW LITE SHALL RECEIVE TEMPERED GLASS.

003 ADD

NOLL & TAM ARCHITECTS
729 Heinz Avenue
Berkeley, CA 94710
tel 510.542.2200
fax 510.542.2201

ARCHITECTS SEAL

LICENSED ARCHITECT
CHRISTOPHER NOLL
No. C15916
REN. 12-31-21
STATE OF CALIFORNIA

APPROVALS

FILE NUMBER: 07-C1

DIVISION OF THE STATE ARCHITECT
APP# 01-117630
ACS_____FLS_____SSS_____
Date:

PROJECT TITLE

CONTRA COSTA CCD
D-4002
DVC SAN RAMON CAMPUS EXPANSION & RENOVATION

1690 Watermill Rd.
San Ramon, CA 94582

ISSUE TITLE
INCREMENT 1 - RENOVATION

ISSUE DATE 4/26/19
NOLL & TAM JOB NUMBER 21630

REVISIONS

	DATE	DESCRIPTION
2	1/30/19	BID ADDENDUM 3
1	9/11/19	ASI 007A

SHEET TITLE
DOOR SCHEDULES & TYPES

SHEET NUMBER
A8.40.1

10/11/2021 2:36:57 PM C:\Users\phan.dung\Documents\Revit Local\DVCSR Expansion_Central 2020_phan.dung@nollandtam.com.rvt

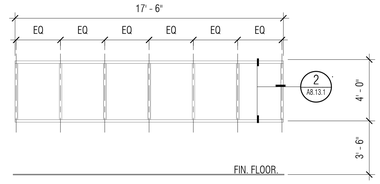

NON-RATED - FIXED - WINDOW
HOLLOW METAL FRAME TO MATCH DOOR FRAMES
LAMINATED SAFETY GLASS PER SPECIFICATION

PRIVACY AND BLACKOUT WINDOW SHADES - MANUAL - WALL MOUNTED - APPROX 17'-10"W X 4'2"H

4 A8.50.1 INTERIOR WINDOW - TYPE 1
1/4" = 1'-0"

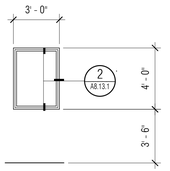

NON-RATED - FIXED - WINDOW
HOLLOW METAL FRAME
TEMPERED GLASS

PRIVACY WINDOW SHADES - MANUAL - WALL MOUNTED - 2" BEYOND WINDOW SIZE, APPROX. 3'-4" W X 4'-2" H

5 A8.50.1 INTERIOR WINDOW - TYPE 2
1/4" = 1'-0"

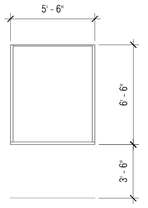

EXISTING NON-RATED - FIXED - WINDOW
EXISTING HOLLOW METAL FRAME
EXISTING GLASS

PRIVACY WINDOW SHADES - MANUAL - WALL MOUNTED - 2" BEYOND WINDOW SIZE. FIELD VERIFY EXISTING WINDOW SIZES APPROX 6'-10" W X 6'-8" H

6 A8.50.1 EXISTING EXTERIOR WINDOW - TYPE 3
1/4" = 1'-0"

ADD ADD

SHEET NOTES

1. NO OPERABLE WINDOWS.

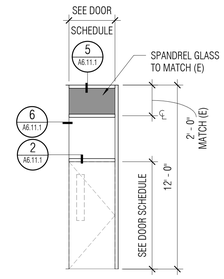

NON-RATED
ALUMINUM STOREFRONT
TEMPERED GLASS AS REQ BY CODE

1 A8.50.1 STOREFRONT TYPE A
1/4" = 1'-0"

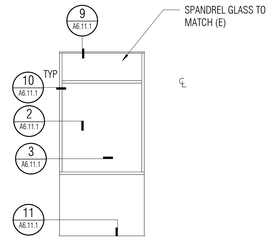

NON-RATED
ALUMINUM STOREFRONT
TEMPERED GLASS AS REQ BY CODE

2 A8.50.1 STOREFRONT TYPE B
1/4" = 1'-0"

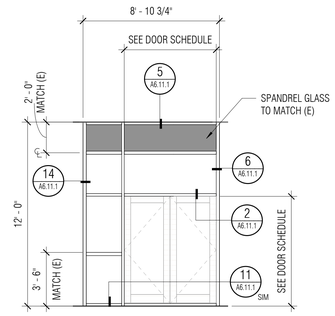

NON-RATED
ALUMINUM STOREFRONT
TEMPERED GLASS AS REQ BY CODE

3 A8.50.1 STOREFRONT TYPE C
1/4" = 1'-0"

NOLL & TAM ARCH TECTS
729 Heinz Avenue
Berkeley, CA 94710
tel 510.542.2200
fax 510.542.2201

ARCHITECTS SEAL

LICENSED ARCHITECT
CHRISTOPHER NOLL
No. C15916
REN. 12-31-21
STATE OF CALIFORNIA

APPROVALS
FILE NUMBER: 07-C1
DIVISION OF THE STATE ARCHITECT
APP# 01-117630
ACS_____FLS_____SSS_____
Date:

PROJECT TITLE
CONTRA COSTA CCD
D-4002
DVC SAN RAMON CAMPUS EXPANSION & RENOVATION
1690 Watermill Rd.
San Ramon, CA 94582

ISSUE TITLE
INCREMENT 1 - RENOVATION

ISSUE DATE 4/26/19
NOLL & TAM JOB NUMBER 21630

REVISIONS

	DATE	DESCRIPTION
1	1/30/19	BID ADDENDUM 3

SHEET TITLE
INTERIOR & EXTERIOR WINDOW & STOREFRONT TYPES

SHEET NUMBER
A8.50.1

10/11/2021 2:37:00 PM C:\Users\phan.dung\Documents\Revit Locals\DVCSR Expansion_Central_2020_phan.dung@nollandtam.com.rvt

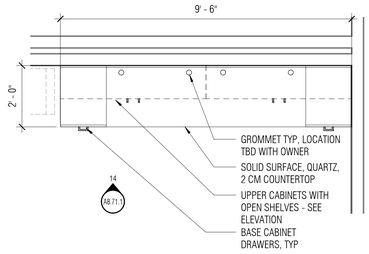

13 A8.71.1 ENLARGED CASEWORK - SHIPPING/RECEIVING COUNTER
1/2" = 1'-0"

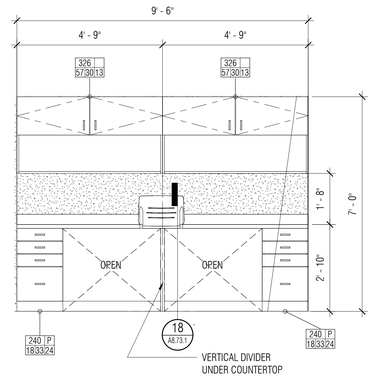

14 A8.71.1 CASEWORK ELEVATION - SHIPPING/RECEIVING COUNTER
1/2" = 1'-0"

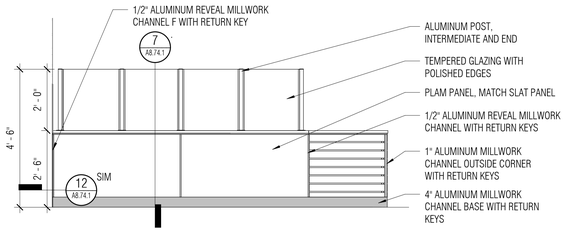

4 A8.71.1 CASEWORK ELEVATION - BOOKSTORE SERVICE DESK - BARRIER
1/2" = 1'-0"

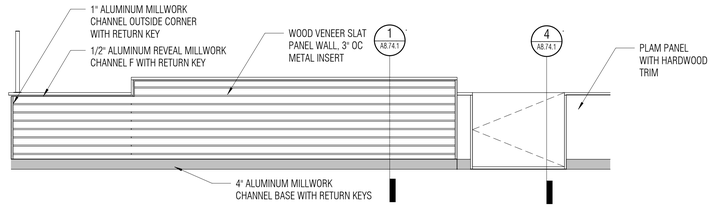

5 A8.71.1 CASEWORK ELEVATION - BOOKSTORE SERVICE DESK - PUBLIC
1/2" = 1'-0"

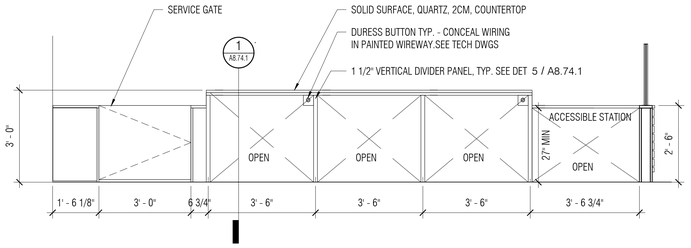

6 A8.71.1 CASEWORK ELEVATION - BOOKSTORE SERVICE DESK - STAFF SIDE
1/2" = 1'-0"

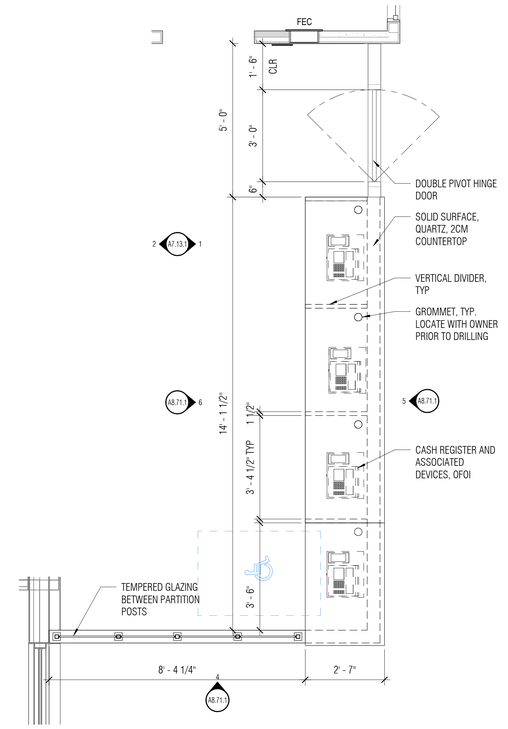

1 A8.71.1 ENLARGED PLAN - SERVICE DESK
1/2" = 1'-0"

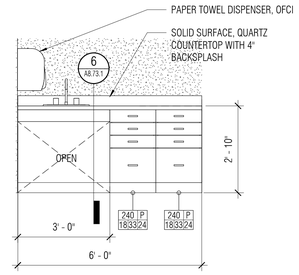

7 A8.71.1 CASEWORK ELEVATION - BOOKSTORE SINK
1/2" = 1'-0"

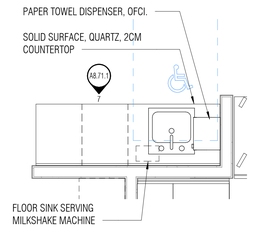

2 A8.71.1 ENLARGED CASEWORK - SINK CABINET
1/2" = 1'-0"

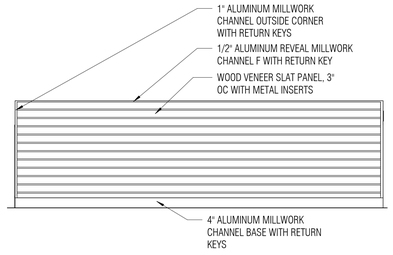

12 A8.71.1 CASEWORK ELEVATION - ISLAND COUNTER - REAR
1/2" = 1'-0"

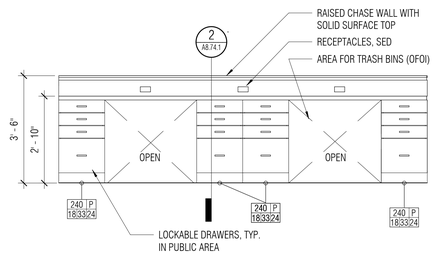

8 A8.71.1 CASEWORK ELEVATION - ISLAND COUNTER - FRONT
1/2" = 1'-0"

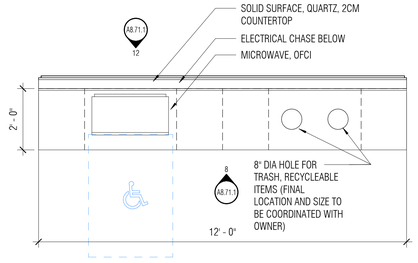

3 A8.71.1 ENLARGED CASEWORK - ISLAND COUNTER
1/2" = 1'-0"

NOLL & TAM ARCHITECTS
729 Heinz Avenue
Berkeley, CA 94710
tel 510.542.2200
fax 510.542.2201

ARCHITECTS SEAL

LICENSED ARCHITECT
CHRISTOPHER NOLL
No. C15916
REN. 12-31-21
STATE OF CALIFORNIA

APPROVALS
FILE NUMBER: 07-C1
DIVISION OF THE STATE ARCHITECT
APP# 01-117630
ACS_____FLS_____SSS_____
Date:

PROJECT TITLE
CONTRA COSTA CCD
D-4002
DVC SAN RAMON CAMPUS EXPANSION & RENOVATION
1690 Watermill Rd.
San Ramon, CA 94582

ISSUE TITLE
INCREMENT 1 - RENOVATION

ISSUE DATE **4/26/19**
NOLL & TAM JOB NUMBER **21630**
REVISIONS
| DATE | DESCRIPTION

SHEET TITLE
INTERIOR - CASEWORK PLANS & ELEVATIONS

SHEET NUMBER
A8.71.1

10/11/2021 2:37:07 PM C:\Users\phan.dung\Documents\Revit Locals\DVCSR Expansion_Central 2020_phan.dung@nollandtam.com.rvt

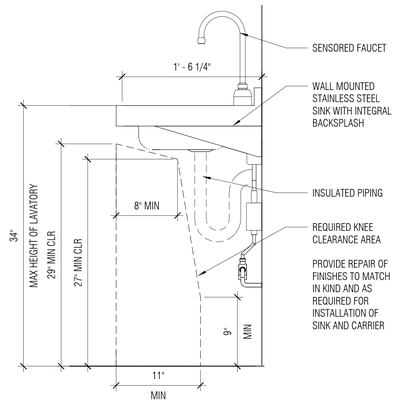

17 ACCESSIBLE SS SINK - WALL MOUNTED
A8.73.1 — 1 1/2" = 1'-0"

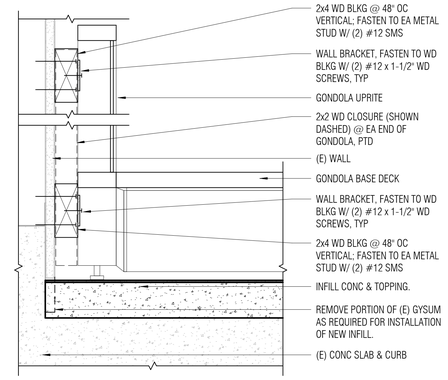

13 GONDOLA ANCHORAGE DETAIL
A8.73.1 — 3" = 1'-0"

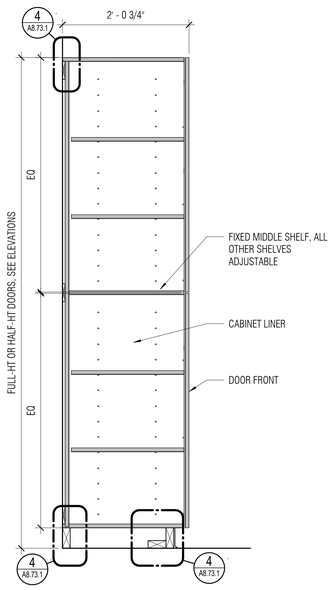

9 FULL-HT CABINET
A8.73.1 — 1" = 1'-0"

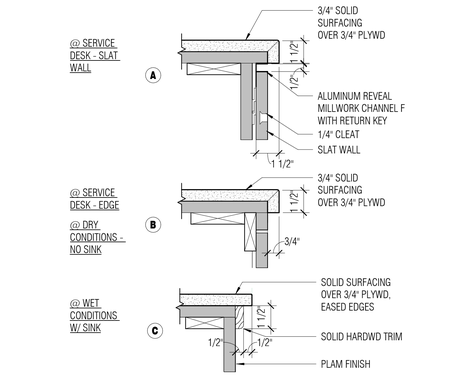

5 TYPICAL COUNTERTOP EDGES
A8.73.1 — 3" = 1'-0"

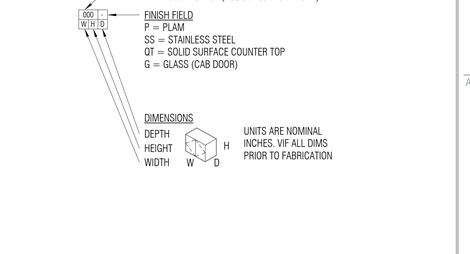

1 CASEWORK SCHEDULE LEGEND2
A8.73.1 — 1/4" = 1'-0"

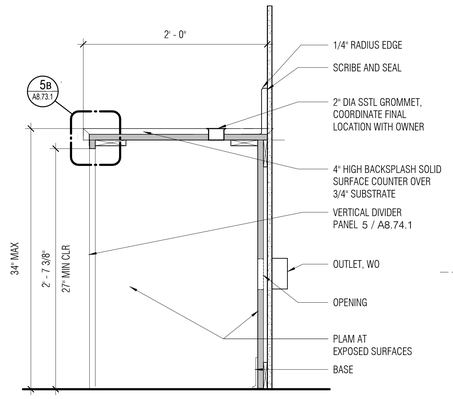

18 SHIPPING/RECEIVING COUNTER - KNEE SPACE
A8.73.1 — 1 1/2" = 1'-0"

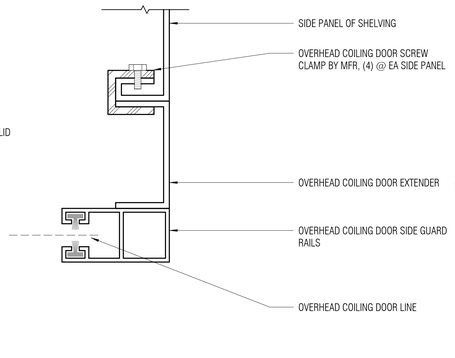

14 OVERHEAD COILING DOOR ATTACHMENT DTL
A8.73.1 — 12" = 1'-0"

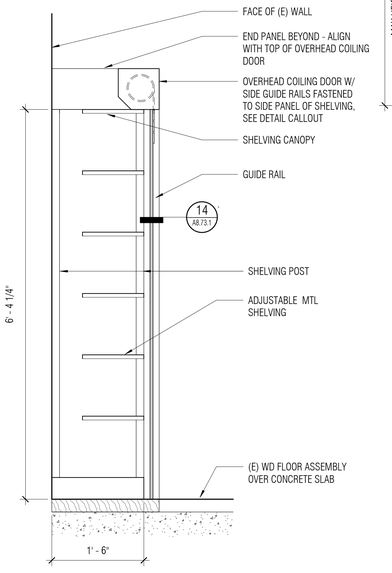

11 BOOKSTORE SHELVING
A8.73.1 — 1" = 1'-0"

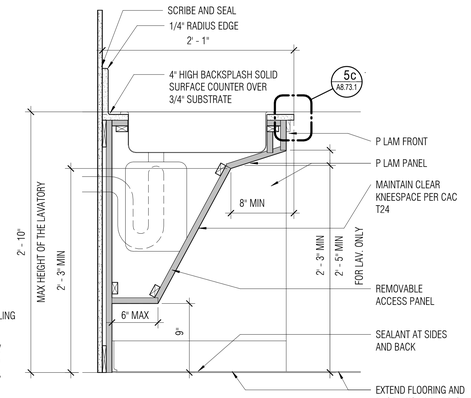

6 ACCESSIBLE SINK BASE CABINET - W/O DOOR
A8.73.1 — 1 1/2" = 1'-0"

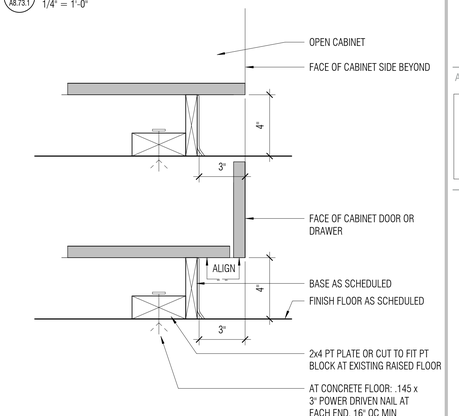

2 TOEKICK ANCHORAGE @ SLAB ON GRADE OR CONC. ON MTL DECK
A8.73.1 — 3" = 1'-0"

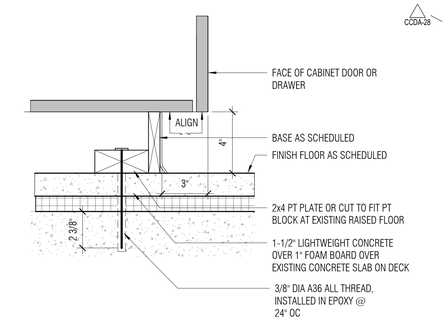

19 TOEKICK ANCHORAGE @ CONC O/FOAM BD O/CONC ON MTL DECK
A8.73.1 — 3" = 1'-0"

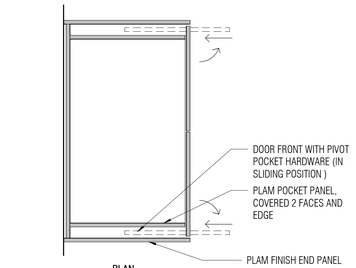

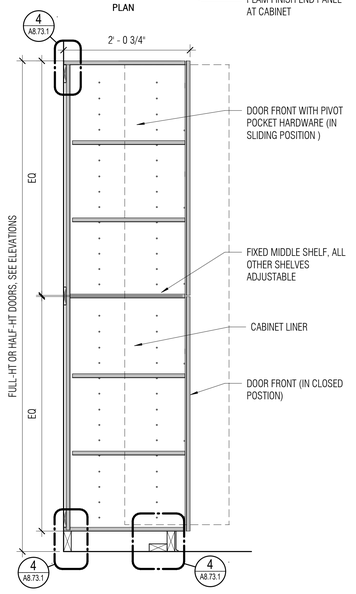

16 FULL-HT CABINET- PIVOT POCKET DOORS
A8.73.1 — 1" = 1'-0"

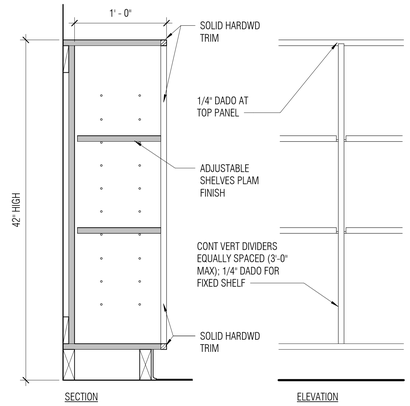

12 STORAGE SHELVING - CLASSROOM
A8.73.1 — 1 1/2" = 1'-0"

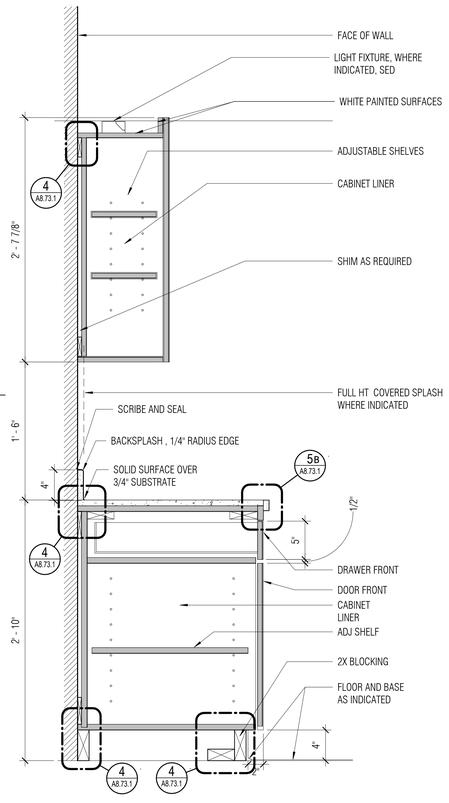

8 BASE AND UPPER CABINET
A8.73.1 — 1 1/2" = 1'-0"

1. CASEWORK (FRONT) (BACK) (TOP) (BOTTOM)
2. FACE OF WALL
3. 1X4 CONTINUOUS WOOD CLEAT
4. 1X2 CONTINUOUS WOOD CLEAT
5. ANCHORAGE - TYPE VARIES BASE UPON WALL CONSTRUCTION AS FOLLOWS:
WOOD STUD FRAMING - #10 X 3 1/2" FHWS @ 16" OC, 2" MAXIMUM FROM EACH END AT STUD OR BLOCKING. MINIMUM 2 PER CABINET W/ 3X4 WOOD BLOCKING WITH A34 EACH END AND TOP AND BOTTOM,
OR
METAL STUD FRAMING - #8 X 2 1/2" FHMS @ 16" OC, 2" MAXIMUM FROM EACH END. MINIMUM 2 PER CABINET W/ CONT 18 GA X 4" STEEL PLATE X CABINET LENGTH,
OR
MASONRY OR CONCRETE - 3/8" DIA RAMSET DYNABOLT SLEEVE ANCHORS (2" MIN EMBEDMENT) @ 24" OC, MINIMUM 2 PER CABINET.

6. 2X SKIRT - BASE AS SCHEDULED
7. 2X4 PT PLATE
8. #10 X 3" FLAT HEAD WOOD SCREWS @ 24" OC.
9. NAILER AS REQUIRED

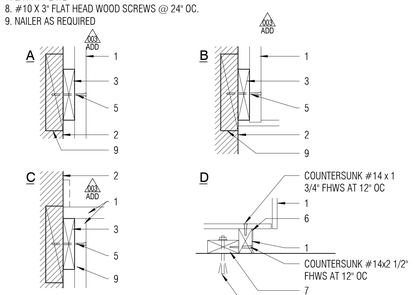

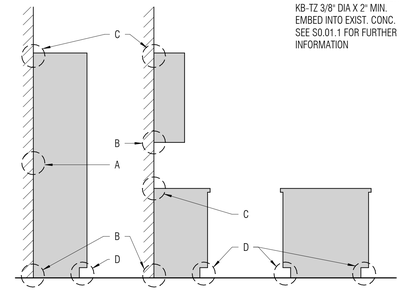

4 TYPICAL CASEWORK ANCHORAGE1
A8.73.1 — 1/2" = 1'-0"

NOLL & TAM ARCHITECTS
729 Heinz Avenue
Berkeley, CA 94710
tel 510.542.2200
fax 510.542.2201

ARCHITECTS SEAL

LICENSED ARCHITECT
CHRISTOPHER NOLL
No. C15916
REN. 12-31-21
STATE OF CALIFORNIA

APPROVALS
FILE NUMBER: 07-C1
DIVISION OF THE STATE ARCHITECT
APP# 01-117630
ACS_____FLS_____SSS_____
Date:

PROJECT TITLE
CONTRA COSTA CCD
D-4002
DVC SAN RAMON CAMPUS EXPANSION & RENOVATION
1690 Watermill Rd.
San Ramon, CA 94582

ISSUE TITLE
INCREMENT 1 - RENOVATION

ISSUE DATE	4/26/19
NOLL & TAM JOB NUMBER	21630

REVISIONS

	DATE	DESCRIPTION
1	1/30/19	BID ADDENDUM 3
2	1/14/20	INC 1 RFI242

SHEET TITLE
INTERIOR - CASEWORK DETAILS

SHEET NUMBER
A8.73.1

10/11/2021 2:37:11 PM C:\Users\phan.dung\Documents\Revit Locals\DVCSR Expansion_Central 2020_phan.dung@nollandtam.com.rvt

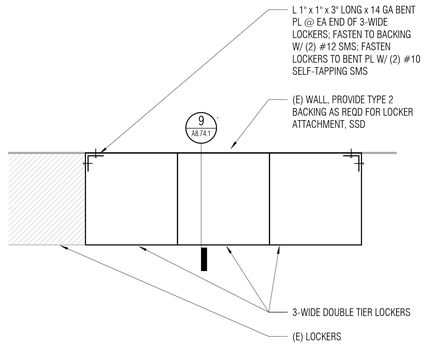

13 A8.74.1 LOCKER ANCHORAGE - ENLARGED PLAN
1 1/2" = 1'-0"

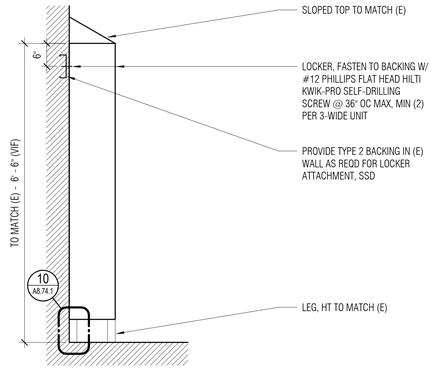

9 A8.74.1 LOCKER ANCHORAGE - SECTION
3/4" = 1'-0"

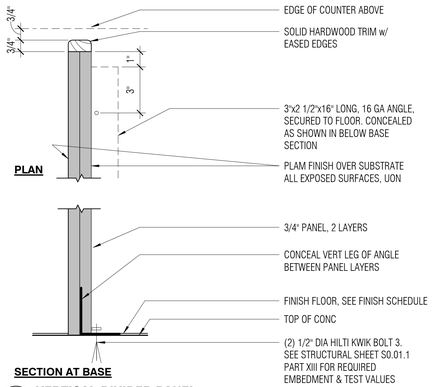

5 A8.74.1 VERTICAL DIVIDER PANEL
3" = 1'-0"

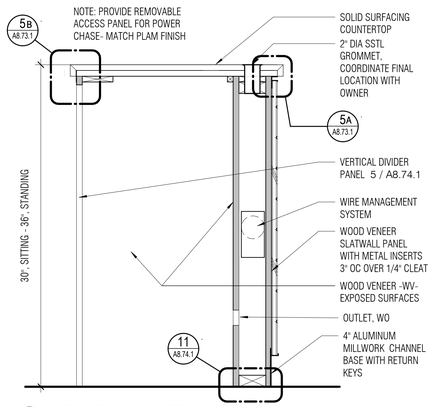

1 A8.74.1 SERVICE DESK - KNEE SPACE
1 1/2" = 1'-0"

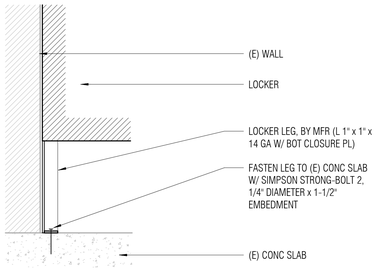

10 A8.74.1 LOCKER ANCHORAGE @ BASE
3" = 1'-0"

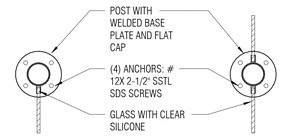

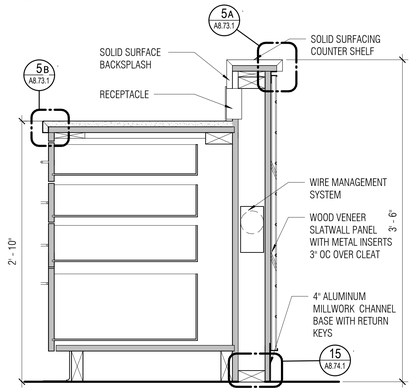

2 A8.74.1 BOOKSTORE - ISLAND COUNTER
1 1/2" = 1'-0"

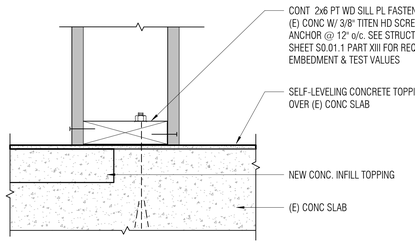

15 A8.74.1 ANCHORAGE- ISLAND @ (E) CONC & WOOD RAISED FLR
3" = 1'-0"

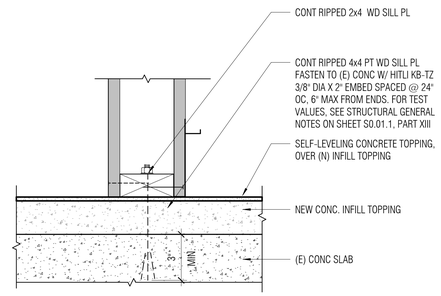

11 A8.74.1 ANCHORAGE @ (E) WOOD RAISED FLR
3" = 1'-0"

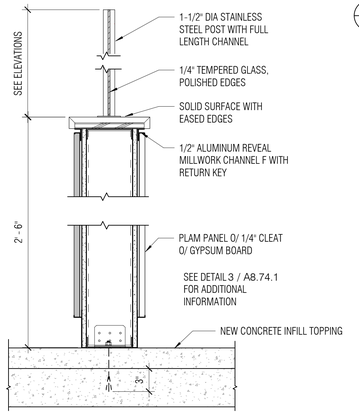

7 A8.74.1 LOW PARTITION WALL - GLAZING POST
1 1/2" = 1'-0"

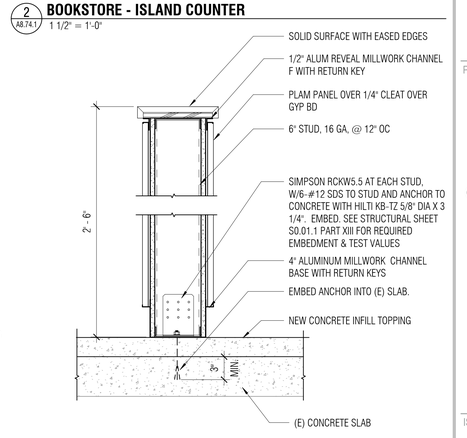

3 A8.74.1 LOW PARTITION WALL
1 1/2" = 1'-0"

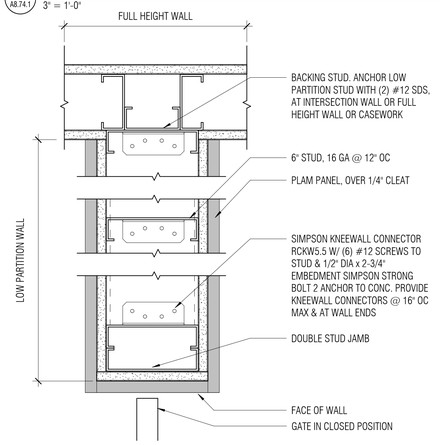

12 A8.74.1 GATE- JAMB PLAN TO WALL
3" = 1'-0"

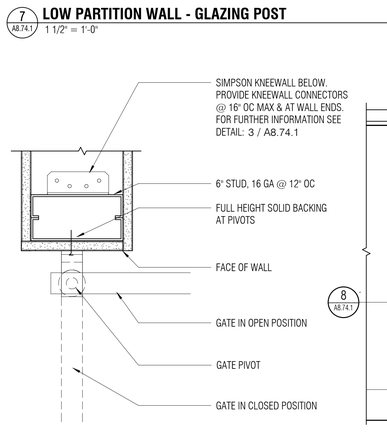

8 A8.74.1 GATE- JAMB PLAN1
3" = 1'-0"

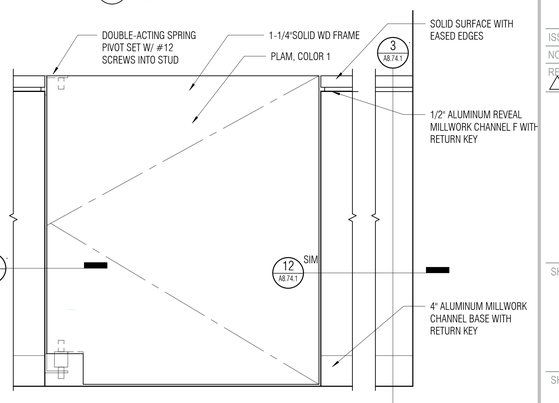

4 A8.74.1 SERVICE_GATE ELEVATION
1 1/2" = 1'-0"

NOLL & TAM ARCHITECTS
729 Heinz Avenue
Berkeley, CA 94710
tel 510.542.2200
fax 510.542.2201

ARCHITECTS SEAL

LICENSED ARCHITECT
CHRISTOPHER NOLL
No. C15916
REN. 12-31-21
STATE OF CALIFORNIA

APPROVALS
FILE NUMBER: 07-C1
DIVISION OF THE STATE ARCHITECT
APP# 01-117630
ACS_____FLS_____SSS_____
Date:

PROJECT TITLE
CONTRA COSTA CCD
D-4002
DVC SAN RAMON CAMPUS EXPANSION & RENOVATION
1690 Watermill Rd.
San Ramon, CA 94582

ISSUE TITLE
INCREMENT 1 - RENOVATION

ISSUE DATE 4/26/19
NOLL & TAM JOB NUMBER 21630

REVISIONS
| DATE | DESCRIPTION

SHEET TITLE
INTERIOR - CASEWORK DETAILS

SHEET NUMBER
A8.74.1

10/11/2021 2:37:14 PM C:\Users\phan.dung\Documents\Revit Locals\DVCSR Expansion_Central_2020_phan.dung@nollandtam.com.rvt

EXISTING BUILDING - ROOM FINISH SCHEDULE						
#	ROOM	FLOOR FINISH	WALL BASE FINISH	WALL FINISH	CEILING FINISH	COMMENTS
147	WAITING AREA	EXISTING TO REMAIN, CPT-1	EXISTING TO REMAIN, WB-1	PT-1	EXISTING TO REMAIN, ACT-1	PROVIDE NEW FINISHES AT AREAS AFFECTED BY WORK
148	ASSESSMENT LAB - COMPUTER LAB	CPT-1	WB-1	PT-1	ACT-1	
162	CLASSROOM	EXISTING TO REMAIN	EXISTING TO REMAIN	PT-1	EXISTING TO REMAIN	PROVIDE NEW FINISHES AT AREAS AFFECTED BY WORK
164	CLASSROOM	CPT-1	WB-1	PT-1	ACT-1	
166	PAINTING STUDIO	EXISTING TO REMAIN	EXISTING TO REMAIN, WB-1	PT-1	ACT-3	PROVIDE NEW FINISHES AT AREAS AFFECTED BY WORK
168	DRAWING STUDIO - CLASSROOM	EXISTING CONCRETE TO REMAIN, SEAL	WB-1	PT-1	ACT-3	PROVIDE NEW FINISHES AT AREAS AFFECTED BY WORK
170	WORKROOM	EXISTING TO REMAIN	EXISTING TO REMAIN	PT-1	EXISTING TO REMAIN	PROVIDE NEW FINISHES AT AREAS AFFECTED BY WORK
181	BOOKSTORE	CF-1	WB-1	PT-1	ACT-1	PROVIDE NEW FINISHES AT AREAS AFFECTED BY WORK/. PROVIDE WD-1 AT BOOKSTORE CANOPY
181A	OFFICE	CF-1	WB-1	PT-1	ACT-1	
181B	STORAGE	CF-1	WB-1	PT-2	ACT-1	1" X 4' TALL SS WALL GUARDS AT WALL OUTSIDE CORNERS
182	WORKROOM	CPT-1	WB-1	PT-1	ACT-1	
204	TEMPORARY TUTORIAL	EXISTING TO REMAIN	EXISTING TO REMAIN	EXISTING TO REMAIN	EXISTING TO REMAIN	
205	TEMPORARY STUDY RM	EXISTING TO REMAIN	EXISTING TO REMAIN, WB-1	PT-1	EXISTING TO REMAIN	PROVIDE NEW FINISHES AT AREAS AFFECTED BY WORK
228	CORRIDOR	EXISTING TO REMAIN	WB-1	PT-1	ACT-1	
229	ANATOMY & PHYSIOLOGY CLASSROOM	RS-2 (ASI)	INTEGRAL COVE BASE	PT-1, PT-2	ACT-2 (CCDA-25)	
229A	CADAVER SCIENCE CLASSROOM	RE-1	INTEGRAL COVE BASE	PT-3	GB-1 (CCDA-25)	
231A	CORRIDOR	CPT-1	WB-1	PT-1	ACT-1	
231B	ALCOVE	CPT-1	WB-1	PT-1	ACT-1, PT-2	
232	STORAGE	RS-2 (ASI)	INTEGRAL COVE BASE (ASI)	PT-1	ACT-1	

SCHEDULE OF INTERIOR FINISHES

SECTION 03 35 00 - CONCRETE FINISHING

SELF LEVELING CONCRETE FINISHING:
CF-1: MANUFACTURER: SEE PROJECT SPECIFICATIONS
COLOR AND FINISH: AT EXPOSED CONDITION - ARDEX SD-T GRAY OR EQUAL WITH SEALER

SECTION 06 41 00 - CUSTOM CASEWORK

PLASTIC LAMINATE:
PL-1: MANUFACTURER: SEE PROJECT SPECIFICATIONS
COLOR AND FINISH: SELECT FROM RANGE OF SOLIDS, TEXTURES, WOODGRAINS

PL-2: MANUFACTURER: SEE PROJECT SPECIFICATIONS
COLOR AND FINISH: SELECT FROM RANGE OF SOLIDS, TEXTURES, WOODGRAINS

SECTION 09 51 00 - ACOUSTICAL TILE CEILINGS

ACOUSTICAL TILE CEILINGS:
ACT-1: MANUFACTURER: SEE PROJECT SPECIFICATIONS
ACT-2: MANUFACTURER: SEE PROJECT SPECIFICATIONS
ACT-3: MANUFACTURER: SEE PROJECT SPECIFICATIONS

SECTION 09 65 00 - RESILIENT FLOORING

RESILIENT FLOOR SHEET:
~~RS-1: MANUFACTURER: SEE PROJECT SPECIFICATIONS~~
~~PRODUCT: SEE PROJECT SPECIFICATIONS~~
~~COLOR: TBD~~ (ASI)

RS-2: MANUFACTURER: ARMSTRONG, OR EQUAL
PRODUCT: MEDENTONE
COLOR: H5301 GRAY LIGHT
NOTE: PROVIDE WELDED ROD TO MATCH FLOORING PATTERN.

RESILIENT WALL BASE:
WB-1: MANUFACTURER: BURKE, ROPPE, OR EQUAL
PRODUCT: BURKE BASE TYPE TS
COLOR: TBD
HEIGHT: 4 INCHES
PROFILE: COVED (TOE)

RESILIENT ACCESSORIES:
MANUFACTURER: BURKE, ROPPE, OR EQUAL
COLORS: TO MATCH BASE, UON

SECTION 09 67 23- RESINOUS FLOORING

RE-1: MANUFACTURER: BASF MASTERTOP, OR EQUAL
PRODUCT: 1851SRS CF
COLOR: 1/8" LIMESTONE FLAKE FORM #1030732

SECTION 09 68 13 - TILE CARPETING

CARPET TILE:
CPT-1: MANUFACTURER: SEE PROJECT SPECIFICATIONS

SECTION 09 90 00 - PAINTING AND COATING

TYPICAL INTERIOR PAINT FINISHES:
CEILINGS & SOFFITS: FLAT
WALLS: EGGSHELL
TOILET ROOM, CUSTODIAL ROOM WALLS: SEMI-GLOSS
PAINTED DOORS & FRAMES: SEMI-GLOSS

INTERIOR PAINT COLORS:

PT-1 PAINT - EGGSHELL - TO MATCH (E)
PT-2 PAINT - SEMIGLOSS
PT-3 PAINT - EPOXY
PT-4 PAINT- TBD SEMIGLOSS, INT. HOLLOW METAL DOOR AND WINDOW FRAMES
PT-5 PAINT - TBD, EXTERIOR @ CEMENT PLASTER, COLOR TO MATCH (E)
PT-6 PAINT - TBD, EXTERIOR @ HOLLOW METAL DOOR, COLOR TO MATCH (E)
PT-7 PAINT - TBD, EXTERIOR @ CANOPY STEEL

SECTION 10 11 00 - VISUAL DISPLAY SURFACES

MARKERBOARDS: MANUFACTURER: SEE PROJECT SPECIFICATIONS.

TACKBOARDS: MANUFACTURER: SEE PROJECT SPECIFICATIONS.

SECTION 12 24 00 - WINDOW SHADES

ROLLER WINDOW SHADES:
CADAVER LAB: MANUFACTURER: MECHOSHADE OR EQUAL
SHADE CLOTH: 0700 SERIES CLASSIC BLACKOUT
OPENESS: 0%
CLOTH COLOR: 0702
FASCIA/TRIM COLOR: MECHOSYSTEMS CLEAR ANODIZED
MOUNTING METHOD: REFER TO DRAWINGS

INT/ EXT. SHADES: MANUFACTURER: MECHOSHADE/5 OR EQUAL
SHADE CLOTH: ECOVEIL OR EQUAL
OPENESS: 5%
CLOTH COLOR: TBD
FASCIA/TRIM COLOR: TBD
MOUNTING METHOD: WALL

SECTION 12 35 53 - LABORATORY CASEWORK

STEEL CASEWORK: MANUFACTURER: HAMILTON LABORATORY SOLUTIONS, OR EQUAL
COLOR: G1 DOVE GRAY
THICKNESS: SEE PROJECT SPECIFICATIONS

WOOD CASEWORK: MANUFACTURER: SEE PROJECT SPECIFICATIONS
COLOR: SEE PROJECT SPECIFICATIONS
THICKNESS: SEE PROJECT SPECIFICATIONS

EPOXY RESIN COUNTERTOPS & SINKS: MANUFACTURER: DURACON, OR EQUAL
COLOR: BLACK ONYX
THICKNESS: SEE PROJECT SPECIFICATIONS

FINISH SCHEDULE NOTES

1. WHERE NEW PAINTING OCCURS, IT APPLIES TO FULL WALL ELEVATION.
2. PROVIDE NEW PAINTING WHERE NEW FINISHES ARE AFFECTED BY WORK. NEW FINISHES SHALL MATCH IN KIND EXISTING ADJACENT SURFACE OR EXISTING WALL ASSEMBLY
3. GYPSUM BOARD LEVEL OF FINISH: SEE SPECIFICATION FOR DESCRIPTION.
   A. LEVEL 0: PROVIDE AT AREAS OF TEMPORARY CONSTRUCTION.
   B. LEVEL 1: PROVIDE AT CEILING PLENUMS, CONCEALED AREAS, JANITOR CLOSETS, UON
   C. LEVEL 2: PROVIDE AT TILE INSTALLATIONS
   D. LEVEL 3: PROVIDE AT PANELS SERVING AS SUBSTRATE TO FABRIC WRAPPED PANELS
   E. LEVEL 4: PROVIDE AT ALL WALLS AND CEILINGS, TYPICAL UON, EXCEPT SURFACES TO RECEIVE SEMI-GLOSS OR GLOSSY PAINTS
   F. LEVEL 5: PROVIDE ONLY AT PANELS TO RECEIVE SEMI-GLOSS OR GLOSSY PAINTS

FINISH SCHEDULE - LEGEND

WALL BASE FINISH
WB-1- WALL BASE - 4" RUBBER

FLOOR FINISH
~~RS-1 RESILIENT FLOOR SHEET~~ (ASI)
RS-2 RESILIENT FLOOR - WELDED SHEET W/ INTEGRAL COVE BASE

RE-1 RESINOUS FLOORING W/ INTEGRAL COVE BASE

CF-1 SELF-LEVELING CONCRETE FINISH OVER CONCRETE INFILL TOPPING, SEAL

CPT-1 CARPET TILE - RENOVATION AREAS

WALL FINISH
PT-1 PAINT - EGGSHELL - TO MATCH (E)
PT-2 PAINT - SEMIGLOSS
PT-3 PAINT - EPOXY
PT-4 PAINT- TBD, INT. HOLLOW METAL DOOR AND WINDOW FRAMES
PT-5 PAINT - TBD, EXTERIOR @ CEMENT PLASTER, COLOR TO MATCH (E)
PT-6 PAINT - TBD, EXTERIOR @ HOLLOW METAL DOOR, COLOR TO MATCH (E)
PT-7 PAINT - TBD, EXTERIOR @ CANOPY STEEL

CEILING FINISH
ACT-1 24X48 CLASSROOM
ACT-2 24X48 LAB
ACT-3 48X48 CLASSROOM - INFILL PANEL INTO (E) CEILING GRID

GB-1 GYP BD CEILING, PAINTED

WD-1 CEDAR AT BOOKSTORE CANOPY

NOLL & TAM ARCHITECTS
729 Heinz Avenue
Berkeley, CA 94710
tel 510.542.2200
fax 510.542.2201

ARCHITECTS SEAL
LICENSED ARCHITECT
CHRISTOPHER NOLL
No. C15916
REN. 12-31-21
STATE OF CALIFORNIA

APPROVALS
FILE NUMBER: 07-C1
DIVISION OF THE STATE ARCHITECT
APP# 01-117630
ACS_____FLS_____SSS_____
Date:

PROJECT TITLE
CONTRA COSTA CCD
D-4002
DVC SAN RAMON CAMPUS EXPANSION & RENOVATION
1690 Watermill Rd.
San Ramon, CA 94582

ISSUE TITLE
INCREMENT 1 - RENOVATION

ISSUE DATE 4/26/19
NOLL & TAM JOB NUMBER 21630

REVISIONS
	DATE	DESCRIPTION
1	3/6/2019	ASI 002
2	12/17/19	INC 1 RFI221

SHEET TITLE
ROOM FINISH SCHEDULE

SHEET NUMBER
A9.13.1

10/11/2021 2:37:17 PM C:\Users\rjhan.dung\Documents\Revit Local\DVCSR Expansion_Central 2020_jhan.dung@nollandtam.com.rvt

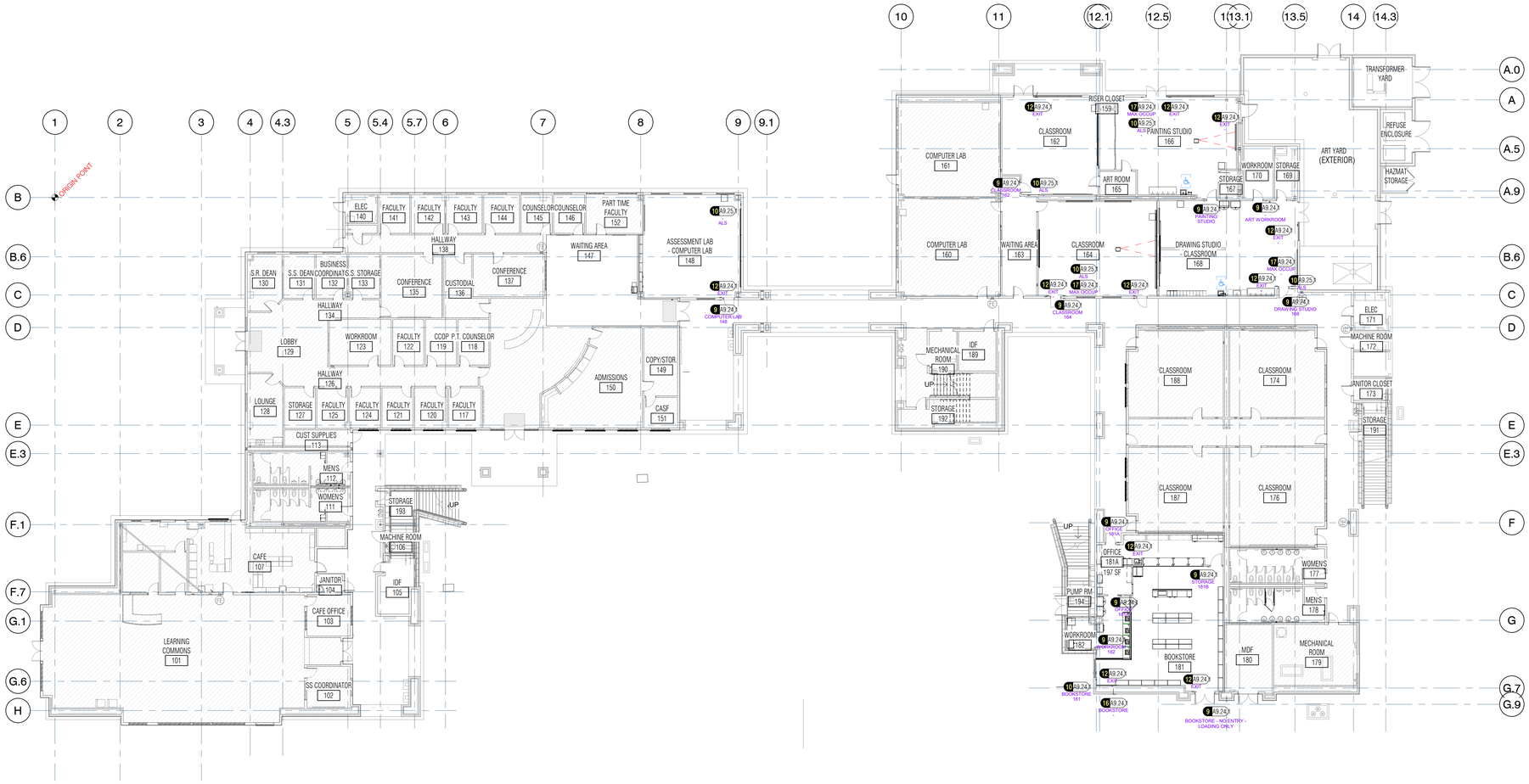

1 A9.21.1 **01 - FLOOR PLAN - OVERALL - SIGNAGE**
1/16" = 1'-0"

LEGEND

DETAIL NUMBER
101
SHEET NUMBER

ROOM/WAYFINDING ID SIGNAGE

NO SIGNAGE WORK IN THIS AREA

NOTE:
INCREMENT 2 COVERS RESTROOM MODIFICATIONS INCLUDING NEW SIGNAGE. RESTROOM SIGNAGE WILL NOT BE UPGRADED AS PART OF INCREMENT 1. RESTROOM SIGNAGE SHOWN ON 9.25.1 IS FOR REFERENCE ONLY.

NOLL & TAM ARCHITECTS
729 Heinz Avenue
Berkeley, CA 94710
tel 510.542.2200
fax 510.542.2201

ARCHITECTS SEAL

LICENSED ARCHITECT
CHRISTOPHER NOLL
No. C15916
REN. 12-31-21
STATE OF CALIFORNIA

APPROVALS
FILE NUMBER: 07-C1
DIVISION OF THE STATE ARCHITECT
APP# 01-117630
ACS_____FLS_____SSS_____
Date:

PROJECT TITLE
CONTRA COSTA CCD
D-4002
DVC SAN RAMON CAMPUS EXPANSION & RENOVATION
1690 Watermill Rd.
San Ramon, CA 94582

ISSUE TITLE
INCREMENT 1 - RENOVATION

ISSUE DATE 4/26/19
NOLL & TAM JOB NUMBER 21630

REVISIONS
| DATE | DESCRIPTION

SHEET TITLE
SIGNAGE PLAN - 1ST FLOOR

SHEET NUMBER
A9.21.1

10/11/2021 2:37:22 PM C:\Users\phan.dung\Documents\Revit Locals\DVCSR Expansion_Central_2020_phan.dung@nollandtam.com.rvt

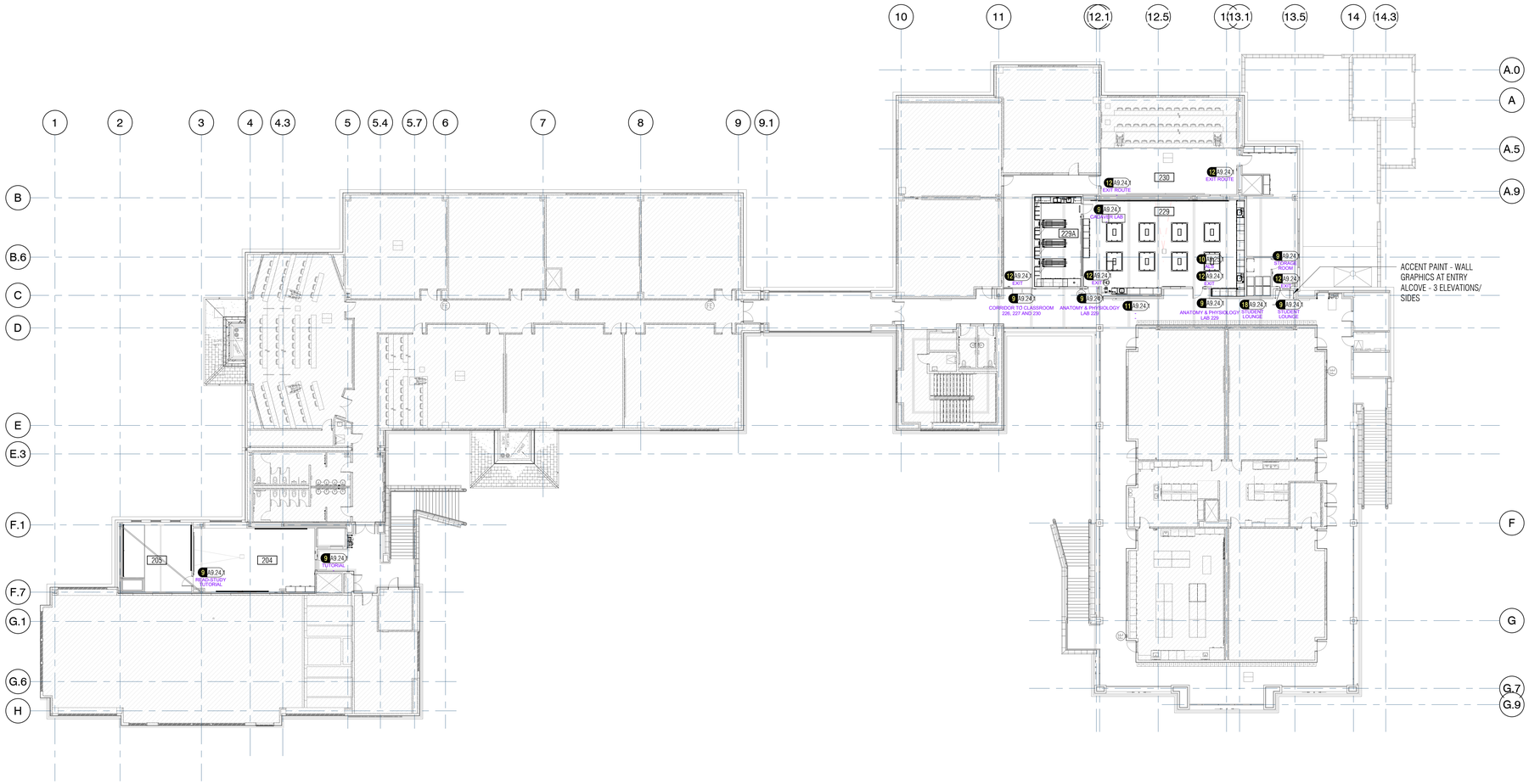

1 A9.22.1 **02 - FLOOR PLAN - OVERALL - SIGNAGE**
1/16" = 1'-0"

LEGEND

DETAIL NUMBER
1 / A9.01
SHEET NUMBER
ROOM/WAYFINDING ID SIGNAGE

NO SIGNAGE WORK IN THIS AREA

NOTE:
INCREMENT 2 COVERS RESTROOM MODIFICATIONS INCLUDING NEW SIGNAGE. RESTROOM SIGNAGE WILL NOT BE UPGRADED AS PART OF INCREMENT 1. RESTROOM SIGNAGE SHOWN ON 9.25.1 IS FOR REFERENCE ONLY.

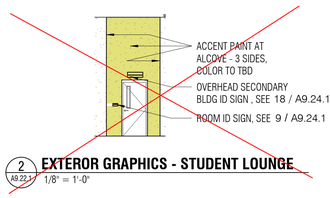

2 A9.22.1 **EXTERIOR GRAPHICS - STUDENT LOUNGE**
1/8" = 1'-0"

NOLL & TAM ARCHITECTS
729 Heinz Avenue
Berkeley, CA 94710
tel 510.542.2200
fax 510.542.2201

ARCHITECTS SEAL

LICENSED ARCHITECT
CHRISTOPHER NOLL
No. C15916
REN. 12-31-21
STATE OF CALIFORNIA

APPROVALS
FILE NUMBER: 07-C1
DIVISION OF THE STATE ARCHITECT
APP# 01-117630
ACS_____FLS_____SSS_____
Date:

PROJECT TITLE
CONTRA COSTA CCD
D-4002
DVC SAN RAMON CAMPUS EXPANSION & RENOVATION
1690 Watermill Rd.
San Ramon, CA 94582

ISSUE TITLE
INCREMENT 1 - RENOVATION

ISSUE DATE 4/26/19
NOLL & TAM JOB NUMBER 21630

REVISIONS
| | DATE | DESCRIPTION |

SHEET TITLE
SIGNAGE PLAN - 2ND FLOOR

SHEET NUMBER
A9.22.1

10/11/2021 2:37:25 PM C:\Users\phan.dung\Documents\Revit Locals\DVCSR Expansion_Central 2020_phan.dung@nollandtam.com.rvt

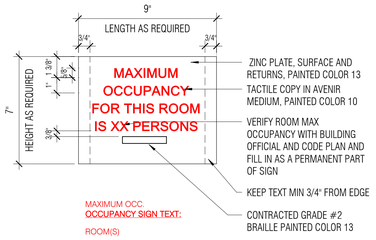

MAXIMUM OCC.
OCCUPANCY SIGN TEXT:

ROOM(S)

CLASSROOM 164 - 58
PAINTING STUDIO 166 - 52
DRAWING STUDIO 168 - 55

NOTE:
1. REFER TO SIGNAGE GENERAL NOTES FOR FURTHER INFORMATION.
2. FOR MOUNTING LOCATION AND HEIGHT REQUIREMENTS SEE DETAIL 8 / A9.24.1

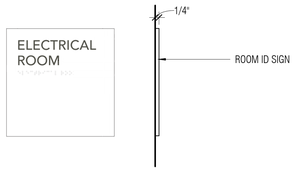

EXAMPLE : TACTILE ID SIGN. DESIGN TO COINCIDE WITH DISTRICT SIGNAGE STANDARDS

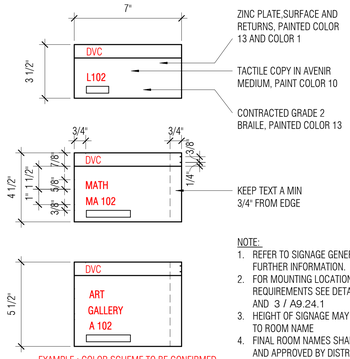

NOTE:
1. REFER TO SIGNAGE GENERAL NOTES FOR FURTHER INFORMATION.
2. FOR MOUNTING LOCATION AND HEIGHT REQUIREMENTS SEE DETAIL 8 / A9.24.1 AND 3 / A9.24.1
3. HEIGHT OF SIGNAGE MAY VARY ACCORDING TO ROOM NAME
4. FINAL ROOM NAMES SHALL BE REVIEWED AND APPROVED BY DISTRICT PRIOR TO FABRICATION
5. MOUNT WITH VHB TAPE AND SILICONE ADHESIVE

EXAMPLE : COLOR SCHEME TO BE CONFIRMED WITH DISTRICT SIGNAGE STANDARDS

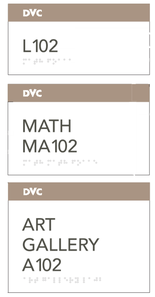

EXAMPLE : TACTILE CLASROOM ID . DESIGN TO COINCIDE WITH DISTRICT SIGNAGE STANDARDS

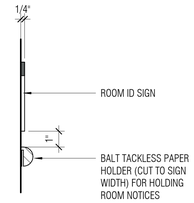

SIGNAGE GENERAL NOTES

1. WHERE PERMANENT IDENTIFICATION IS PROVIDED FOR ROOMS AND SPACES, SIGNS SHALL BE INSTALLED ON THE WALL ADJACENT TO THE LATCH SIDE OF THE DOOR. WHERE THERE IS NO WALL SPACE TO THE LATCH SIDE OF THE DOOR, SIGNS SHALL BE PLACED ON THE NEAREST ADJACENT WALL. WHERE A TACTILE SIGN IS PROVIDED AT DOUBLE DOORS WITH ONE ACTIVE LEAF. THE SIGN SHALL BE LOCATED ON THE INACTIVE LEAD. WHIF TWO ACTIVE LEAFS, THE SIGN SHALL BE LOCATED TO THE RIGHT OF THE RIGHT HAND DOOR. MOUNTING LOCATION FOR SUCH SIGNAGE SHALL BE SO THAT A PERSON MAY APPROACH WITHIN 3" OF SIGNAGE WITHOUT ENCOUNTERING PROTRUDING OBJECTS OR STANDING WITHIN THE SWING OF A DOOR. MOUNTING HEIGHT SHALL BE PER DETAIL 3 / A9.24.1
2. ALL INTERIOR SIGNS SHALL BE 1/8" THICK MINIMUM. (UON)
3. ALL EXTERIOR SIGNS SHALL BE 1/4" THICK MINIMUM. (UON)
4. RAISED CHARACTERS: ALL TACTILE SIGNS (SIGNS WHICH INCLUDE BRAILLE) SHALL HAVE THE SIGN LETTERING THAT COMPLY WITH CBC 11B-703.2 AND SHALL BE DUPLICATED IN BRAILLE COMPLYING WITH CBC 11B-703.3. RAISED CHARACTERS SHALL BE INSTALLED IN ACCORDANCE WITH CBC 11B-703.4.
   A. DEPTH: RAISED 1/32"
   B. CASE: LETTER CHARACTERS TO BE UPPERCASE
   C. STYLE: NEUTRAFACE TT BOLD. (SANS SERIF) (UON). SEE SIGNAGE DETAIL FOR ADDITIONAL INFO
   D. CHARACTER PROPORTIONS, STROKE THICKNESS, SPACING, LINE SPACING AND FORMAT TO MEET CBC 11B-703.2.
   E. CHARACTER HEIGHT: SHALL BE 5/8" MIN. TO 2" MAX. IN HEIGHT, USE LARGEST LETTER HEIGHT PRACTICAL. (UON) VERIFY ALL TEXT SIZES PRIOR TO FABRICATION.
5. PER CBC TABLE 11B-703.3.1: CONTRACTED CALIFORNIA (GRADE 2) BRAILLE SHALL BE USED WHENEVER BRAILLE SYMBOLS ARE REQUIRED.
   A. DIMENSIONS AND CAPITALIZATION: REFER TO DETAIL3 / A9.24.1 FOR DIMENSIONS. CAPITALIZATION TO MEET CBC 11-703.3.1.
   B. FOR BRAILLE POSITION, INSTALLATION HEIGHT AND LOCATION REQUIREMENTS ON THE SIGN SEE
6. PICTOGRAM FIELD: PICTOGRAMS SHALL HAVE A FIELD HEIGHT OF 6" MINIMUM. CHARACTERS AND BRAILLE SHALL NOT BE LOCATED IN THE PICTOGRAM FIELD.
7. PICTOGRAMS SHALL HAVE TEXT DESCRIPTORS LOCATED DIRECTLY BELOW THE PICTOGRAM FIELD.
8. ALL CHARACTERS, PICTOGRAMS & THE FIELD UPON WHICH THEY ARE PLACED ARE TO BE OF A NON-GLARE FINISH AND SHALL CONTRAST WITH THEIR BACKGROUND, EITHER LIGHT ON DARK OR DARK ON LIGHT.
9. ASSISTIVE LISTENING SYSTEMS: SHALL BE IDENTIFIED BY THE INTERNATIONAL SYMBOL OF ACCESS FOR HEARING LOSS.
10. EDGES AND VERTICES ON GEOMETRIC SYMBOLS: EDGES SHALL BE EASED OR ROUNDED AT 1/16" INCH MIN. OR CHAMFERED AT 1/8" MAX. SEE DETAIL
11. ALL SIGNS SHALL HAVE ALL EDGES EASED.
12. SUBMIT A DRAWING SET FOR APPROVAL WHICH IDENTIFIES SIGNAGE TYPES, MATERIALS & FINISHES, LOCATIONS, ROOM NUMBERS, TEXT & ORIENTATION OF DIRECTIONAL ARROWS TO OWNER & ARCHITECT PRIOR TO FABRICATION
13. ALL SIGNS SHALL BE MOUNTED ACCORDING TO MANUFACTURES INSTRUCTIONS.
14. ALL EXTERIOR MOUNTED SIGNS TO BE RATED FOR EXTERIOR USE BY MANUFACTURER.
15. ALL PLASTIC SIGNS ADHESIVELY APPLIED TO GLASS SHALL HAVE AN ADDITIONAL PLASTIC BACKING THE SAME SIZE AS THE SIGN ALIGNED AND ADHESIVELY APPLIED TO THE OTHER SIDE OF THE GLASS.
16. GRAPHIC LAYOUT, FONTS, COLOR, AND MATERIALS OF SIGNAGE TO COMPLY WITH DISTRICT STANDARDS. REFER TO DETAIL 11/A9.25.1 FOR COLORS AND MATERIAL.
17. CODE-GOVERENED SIGNS TO BE FIELD INSPECTED PER CBC 11B.703.1.1.2.

TYPICAL SIGN FINISHES (UON):

PANEL FINISH:	-70% CONTRASTING COLOR TO MATCH DISTRICT STANDARDS, NON-GLARE FINISH
GRAPHIC METHOD:	-SCREEN PROCESS
GRAPHIC COLOR:	-BONE WHITE, NON-GLARE FINISH

TABLE 11B-703.3.1
BRAILLE DIMENSIONS

MEASUREMENT RANGE	MINIMUM IN INCHES MAXIMUM IN INCHES
DOT BASE DIAMETER	0.059 (1.5MM) TO 0.063 (1.6MM)
DISTANCE BETWEEN TWO DOTS IN THE SAME CELL[1]	0.100 (2.5MM)
DISTANCE BETWEEN CORRESPONDING DOTS IN ADJACENT CELLS[1]	0.300 (7.6MM)
DOT HEIGHT	0.025 (0.6MM) TO 0.037 (0.9MM)
DISTANCE BETWEEN CORRESPONDING DOTS FROM ONE CELL DIRECTLY BELOW[1]	0.395 (10MM) TO 0.400 (10.2MM)

1. MEASURED CENTER TO CENTER.

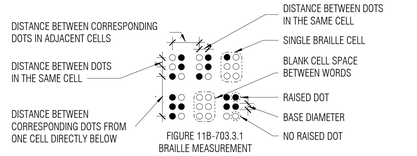

FIGURE 11B-703.3.1
BRAILLE MEASUREMENT

1 BRAILLE DIMENSIONS (REFERENCE)
A9.24.1 — 3" = 1'-0"

11B-703.2.6.4 EDGES AND VERTICES ON GEOMETRIC SYMBOLS. EDGES SHALL BE EASED OR ROUNDED AT 1/16 INCH (1.59 mm) MINIMUM, OR CHAMFERED AT 1/8 INCH (3.2 mm) MAXIMUM. VERTICES SHALL BE RADIUSED BETWEEN 1/8 INCH (3.2mm) MINIMUM AND 1/4 INCH (6.4mm) MAXIMUM.

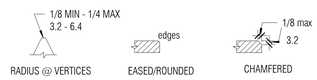

FIGURE 11B-703.2.6.4
EDGES AND VERTICES ON GEOMETRIC SYMBOLS

17 MAX OCCUPANCY SIGN
A9.24.1 — 3" = 1'-0"

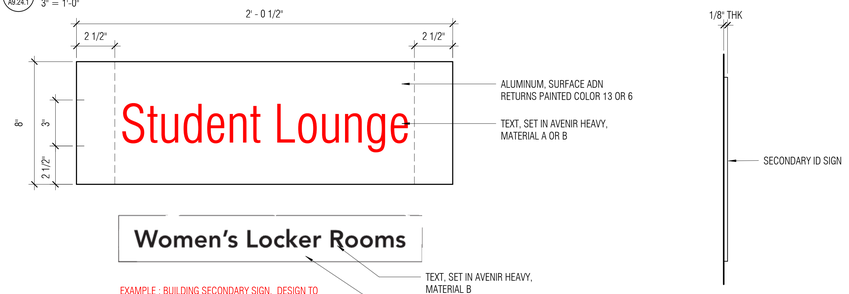

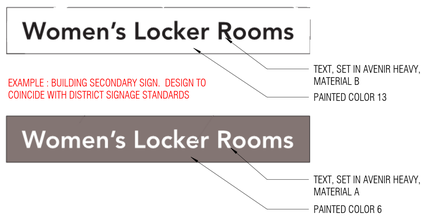

EXAMPLE : BUILDING SECONDARY SIGN. DESIGN TO COINCIDE WITH DISTRICT SIGNAGE STANDARDS

NOTE:
1. REFER TO SIGNAGE GENERAL NOTES FOR FURTHER INFORMATION.
2. FOR MOUNTING PLACEMENT ABOVE 96 INCHES
3. FOR PLACEMENT ON DARK BACKGROUND, USE VERSION WITH LIGHT SURFACE. FOR PLACMENT ON LIGHT BACKGROUND, USE VERSION WITH DARK SURFACE

9 CLASSROOM NAME/NUMBER
A9.24.1 — 3" = 1'-0"

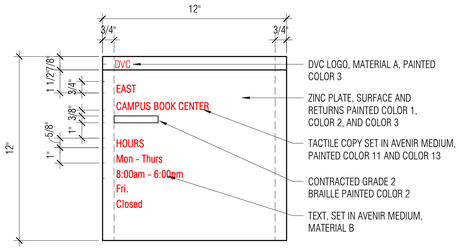

SIZES TO BE CONFIRMED WITH DISTRICT SIGNAGE STANDARDS

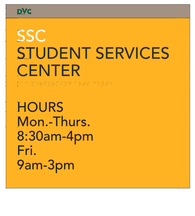

EXAMPLE : TACTILE BUILDING ID W/ MESSAGE. DESIGN TO COINCIDE WITH DISTRICT SIGNAGE STANDARDS

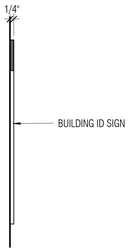

NOTE:
1. REFER TO SIGNAGE GENERAL NOTES FOR FURTHER INFORMATION.
2. FOR MOUNTING LOCATION AND HEIGHT REQUIREMENTS SEE DETAIL 8 / A9.24.1 AND 3 / A9.24.1
3. FINAL ROOM NAMES SHALL BE REVIEWED AND APPROVED BY DISTRICT PRIOR TO FABRICATION. CAMPUS NAMES ROOM 'BOOKSTORE'. DVC WEBSITE REFER TO CAMPUS BOOK CENTER

18 SECONDARY BUILDING ID
A9.24.1 — 3" = 1'-0"

NOTE:
1. ALUMINUM LETTERS, TET SET IN AVENIR BLACK, PINNED OFF THE WALL

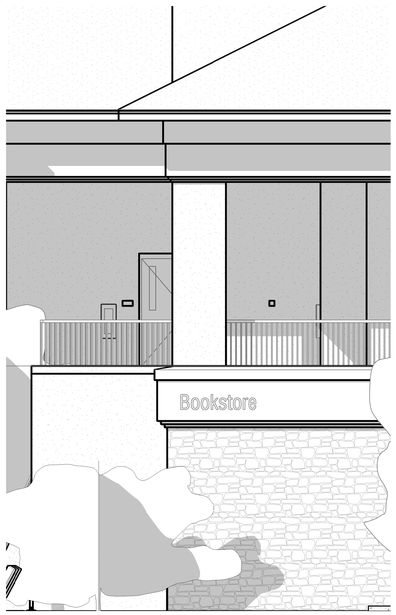

16 SOUTH ELEVATION - BOOKSTORE
A9.24.1 — 1/4" = 1'-0"

10 ROOM ID_HOURS
A9.24.1 — 3" = 1'-0"

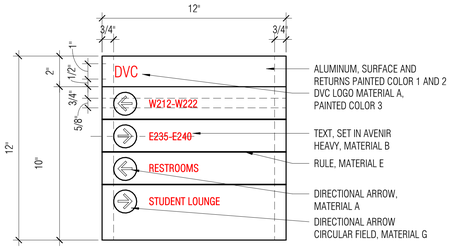

SIZES TO BE CONFIRMED WITH DISTRICT SIGNAGE STANDARDS

EXAMPLE : BUILDING WAYFINDING SIGN. DESIGN TO COINCIDE WITH DISTRICT SIGNAGE STANDARDS

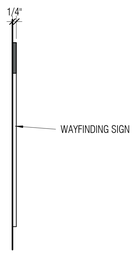

NOTE:
1. REFER TO SIGNAGE GENERAL NOTES FOR FURTHER INFORMATION.
2. FOR MOUNTING LOCATION AND HEIGHT REQUIREMENTS SEE DETAIL 8 / A9.24.1 AND 3 / A9.24.1
3. FINAL ROOM NAMES SHALL BE REVIEWED AND APPROVED BY DISTRICT PRIOR TO FABRICATION

11 PEDESTRIAN DIRECTIONAL
A9.24.1 — 3" = 1'-0"

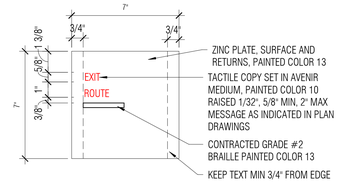

SIGN MESSAGE VARIANTS
(AS INDICATED IN PLAN DRAWINGS)

EXIT
EXIT ROUTE
TO EXIT
EXIT STAIR UP
EXIT STAIR DOWN
EXIT RAMP UP
EXIT RAMP DOWN
NOT AN EXIT

NOTE:
1. REFER TO SIGNAGE GENERAL NOTES FOR FURTHER INFORMATION.
2. FOR MOUNTING LOCATION AND HEIGHT REQUIREMENTS SEE DETAIL 8 / A9.24.1

12 TACTILE EXIT SIGN
A9.24.1 — 3" = 1'-0"

8 SIGNAGE AT DOORS
A9.24.1 — 3/8" = 1'-0"

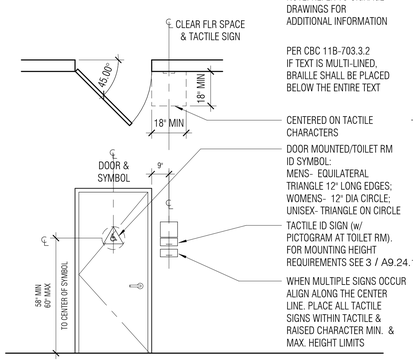

3 TACTILE SIGNAGE MOUNTING HT
A9.24.1 — 3" = 1'-0"

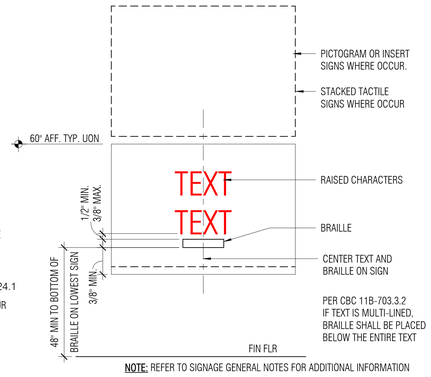

NOTE: REFER TO SIGNAGE GENERAL NOTES FOR ADDITIONAL INFORMATION

NOLL & TAM ARCHITECTS
729 Heinz Avenue
Berkeley, CA 94710
tel 510.542.2200
fax 510.542.2201

ARCHITECTS SEAL

LICENSED ARCHITECT
CHRISTOPHER NOLL
No. C15916
REN. 12-31-21
STATE OF CALIFORNIA

APPROVALS

FILE NUMBER: 07-C1

DIVISION OF THE STATE ARCHITECT
APP# 01-117630
ACS_____FLS_____SSS_____
Date:

PROJECT TITLE

CONTRA COSTA CCD
D-4002
DVC SAN RAMON CAMPUS EXPANSION & RENOVATION

1690 Watermill Rd.
San Ramon, CA 94582

ISSUE TITLE

INCREMENT 1 - RENOVATION

ISSUE DATE	4/26/19
NOLL & TAM JOB NUMBER	21630

REVISIONS

	DATE	DESCRIPTION

SHEET TITLE

SIGNAGE DETAILS

SHEET NUMBER

A9.24.1

10/11/2021 2:37:32 PM C:\Users\phan.dung\Documents\Revit Locals\DVCSR Expansion_Central 2020_phan.dung@nollandtam.com.rvt

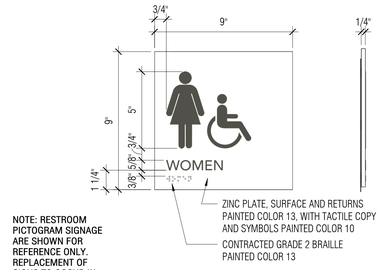

NOTE: RESTROOM PICTOGRAM SIGNAGE ARE SHOWN FOR REFERENCE ONLY. REPLACEMENT OF SIGNS TO OCCUR IN INCREMENT 2 WITH RESTROOM MODIFICATIONS

NOTE:
1. REFER TO SIGNAGE GENERAL NOTES FOR FURTHER INFORMATION.
2. FOR MOUNTING LOCATION AND HEIGHT REQUIREMENTS SEE DETAIL 8 / A9.24.1

13 A9.25.1 RESTROOM SIGNAGE (FOR REFERENCE ONLY)
3" = 1'-0"

NOTE:
1. INDICATE LOCATION OF SIGN ON SUBMITTED SIGNAGE PLAN FOR EACH SPACE/ROOM REQUIRED TO BE EQUIPPED WITH AN ALS, EVEN IF THE SYSTEM IS N.I.C. THE SIGN SHALL COMPLY WITH SECTION 2013 CBC CH. 11B, DIVISION 7
2. REFER TO SIGNAGE GENERAL NOTES FOR FURTHER INFORMATION.
3. FOR MOUNTING LOCATION AND HEIGHT REQUIREMENTS SEE DETAIL 8 / A9.24.1

10 A9.25.1 ASSISTIVE LISTENING SYSTEM
3" = 1'-0"

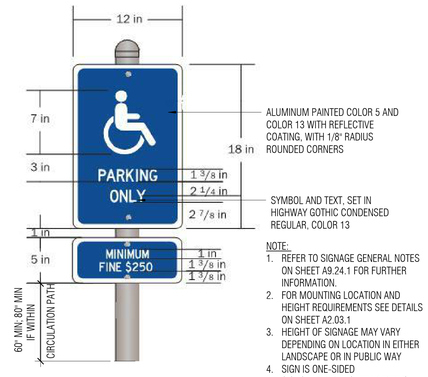

NOTE: 60" MIN IS WITHIN LANDSCAPED AREA

NOTE:
1. REFER TO SIGNAGE GENERAL NOTES ON SHEET A9.24.1 FOR FURTHER INFORMATION.
2. FOR MOUNTING LOCATION AND HEIGHT REQUIREMENTS SEE DETAILS ON SHEET A2.03.1
3. HEIGHT OF SIGNAGE MAY VARY DEPENDING ON LOCATION IN EITHER LANDSCAPE OR IN PUBLIC WAY
4. SIGN IS ONE-SIDED
5. SIGNS IDENTIFYING VAN PARKING SPACES SHALL CONTAIN ADDITIONAL LANGUAGE OR AN ADDITIONAL SIGN WITH THE DESIGNATION "VAN ACCESSIBLE".

1 A9.25.1 ACCESSIBLE PARKNG IDENTIFICATION SIGN
1 1/2" = 1'-0"

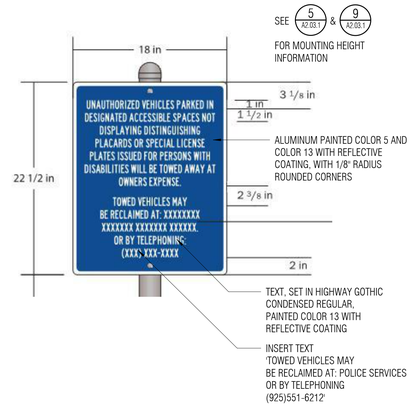

2 A9.25.1 UNAUTHORIZED VEHICLE - TOW-AWAY SIGN
1 1/2" = 1'-0"

1. ACRYLIC PANEL SURFACE AND RETURNS PAINTED COLOR 13
2. SURFACE APPLIED SILK SCREENED SYMBOL, COLOR 6
3. ACRYLIC PANEL SURFACE AND RETURNS PAINTED COLOR 6
4. SURFACE APPLIED SILK SCREEN SYMBOLS, COLOR 13
5. 1/8" RADIUS ROUNDED COLORS

T24 SIGNS IDENTIFY RESTROOMS AND ARE TO BE PLACED ON DOORS LEADING INTO SPACE. USE DARK SIGNS ON LIGHT COLORED DOORS. COLORS ON SIGN ARE REVERSED

NOTE: RESTROOM PICTOGRAM SIGNAGE ARE SHOWN FOR REFERENCE ONLY. REPLACEMENT OF SIGNS TO OCCUR IN INCREMENT 2 WITH RESTROOM MODIFICATIONS

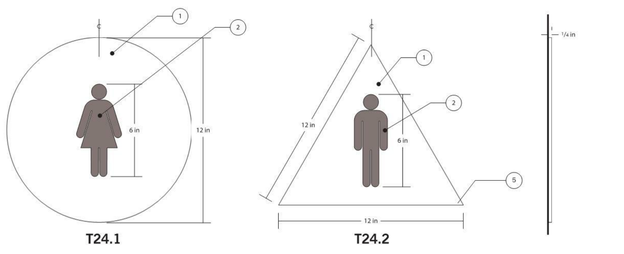

1. WOMEN'S ELEVATION
SCALE = 1/4" = 1'

2. MEN'S ELEVATION
SCALE = 1/4" = 1'

3. SIDE ELEVATION
SCALE = 1/4" = 1'

NOTE:
1. REFER TO SIGNAGE GENERAL NOTES FOR FURTHER INFORMATION.
2. FOR MOUNTING LOCATION AND HEIGHT REQUIREMENTS SEE DETAIL 8 / A9.24.1

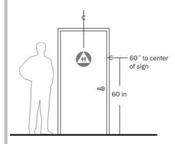

7. LOCATION DIAGRAM
SCALE = 1/4" = 1'

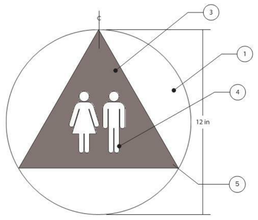

4. UNISEX ELEVATION
SCALE = 1/4" = 1'

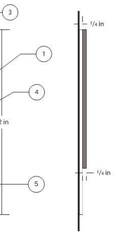

5. UNISEX SIDE ELEVATION
SCALE = 1/4" = 1'

6. VERSIONS
SCALE = 1/4" = 1'

20 A9.25.1 RESTROOM PICTORGRAM SIGNAGE (FOR REFERENCE ONLY)
3" = 1'-0"

Colors & Finishes

Paint

COLOR 1
MATCH
PMS 7530
SATIN FINISH

COLOR 2
MATCH
PMS 1235
SATIN FINISH

COLOR 3
MATCH
PMS 3425
SATIN FINISH

COLOR 4
MATCH
PMS 2612
SATIN FINISH

COLOR 5
MATCH
#15090 in Fed Standard 595B
SATIN FINISH

COLOR 6
MATCH
PMS 409
SATIN FINISH

COLOR 7
MATCH
PMS 7510
SATIN FINISH

COLOR 8
MATCH
PMS 3302
SATIN FINISH

COLOR 9
MATCH
PMS 519
SATIN FINISH

COLOR 10
MATCH
PMS 418
SATIN FINISH

COLOR 11
MATCH
ICI
DARK SECRET
#00NN 05/000
SATIN FINISH

COLOR 12
MATCH
ICI
DEEP ONYX
#00NN 07/000
SATIN FINISH

COLOR 13
MATCH
ICI
DRIFTING SNOW
#10BB 83/014
SATIN FINISH

COLOR 14
MATCH
PMS 186
SATIN FINISH

Materials

MATERIAL A
GERBER 220—
OPAQUE
WHITE VINYL

MATERIAL B
GERBER 220—
OPAQUE
BLACK VINYL

MATERIAL C
GERBER 220—
OPAQUE
DARK GREEN
VINYL

MATERIAL D
GERBER 220—
OPAQUE
FOREST GREEN
VINYL

MATERIAL E
GERBER 220—
OPAQUE
IMITATION GOLD
VINYL

MATERIAL F
TELEGRAY
ORACAL 751
HIGH
PERFORMANCE
CAST VINYL

MATERIAL G
GERBER 220—
OPAQUE
SANDSTONE
VINYL

MATERIAL H
GERBER 220—
OPAQUE
VIVID BLUE
VINYL

MATERIAL I
GERBER 220—
OPAQUE
PERFECT MATCH
RED
VINYL

MATERIAL J
GERBER 280—
REFLECTIVE
WHITE
VINYL

11 A9.25.1 SIGNAGE COLORS AND MATERIALS
3" = 1'-0"

NOLL & TAM ARCHITECTS
729 Heinz Avenue
Berkeley, CA 94710
tel 510.542.2200
fax 510.542.2201

ARCHITECTS SEAL

LICENSED ARCHITECT
CHRISTOPHER NOLL
No. C15916
REN. 12-31-21
STATE OF CALIFORNIA

APPROVALS
FILE NUMBER: 07-C1
DIVISION OF THE STATE ARCHITECT
APP# 01-117630
ACS_____ FLS_____ SSS_____
Date:

PROJECT TITLE
CONTRA COSTA CCD
D-4002
DVC SAN RAMON CAMPUS EXPANSION & RENOVATION
1690 Watermill Rd.
San Ramon, CA 94582

ISSUE TITLE
INCREMENT 1 - RENOVATION

ISSUE DATE 4/26/19
NOLL & TAM JOB NUMBER 21630
REVISIONS
△ | DATE | DESCRIPTION

SHEET TITLE
SIGNAGE DETAILS

SHEET NUMBER
A9.25.1

10/11/2021 2:37:36 PM C:\Users\phan.dung\Documents\Revit Locals\DVCSR Expansion_Central 2020_phan.dung@nollandtam.com.rvt

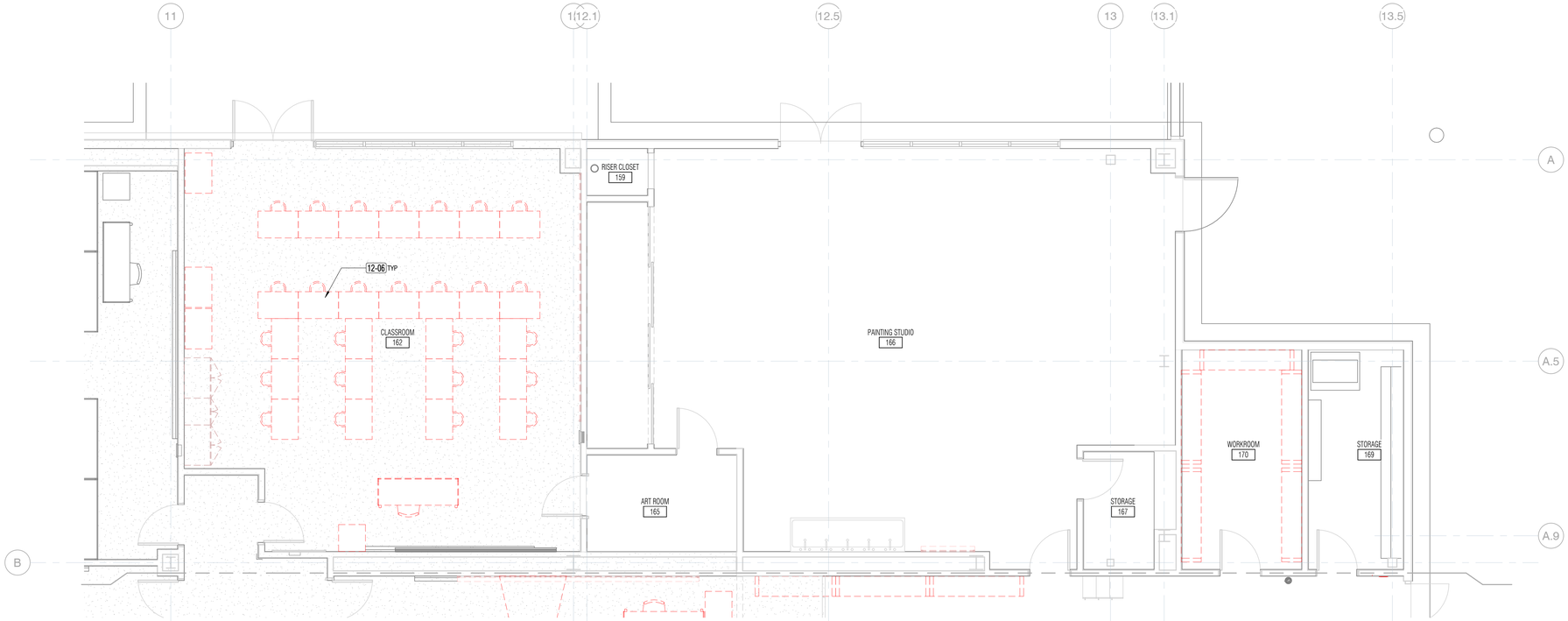

1 A9.52.1 **01 - FURNITURE PLAN - EAST (DEMO) - DRAWING - PAINTING STUDIO**
1/4" = 1'-0"

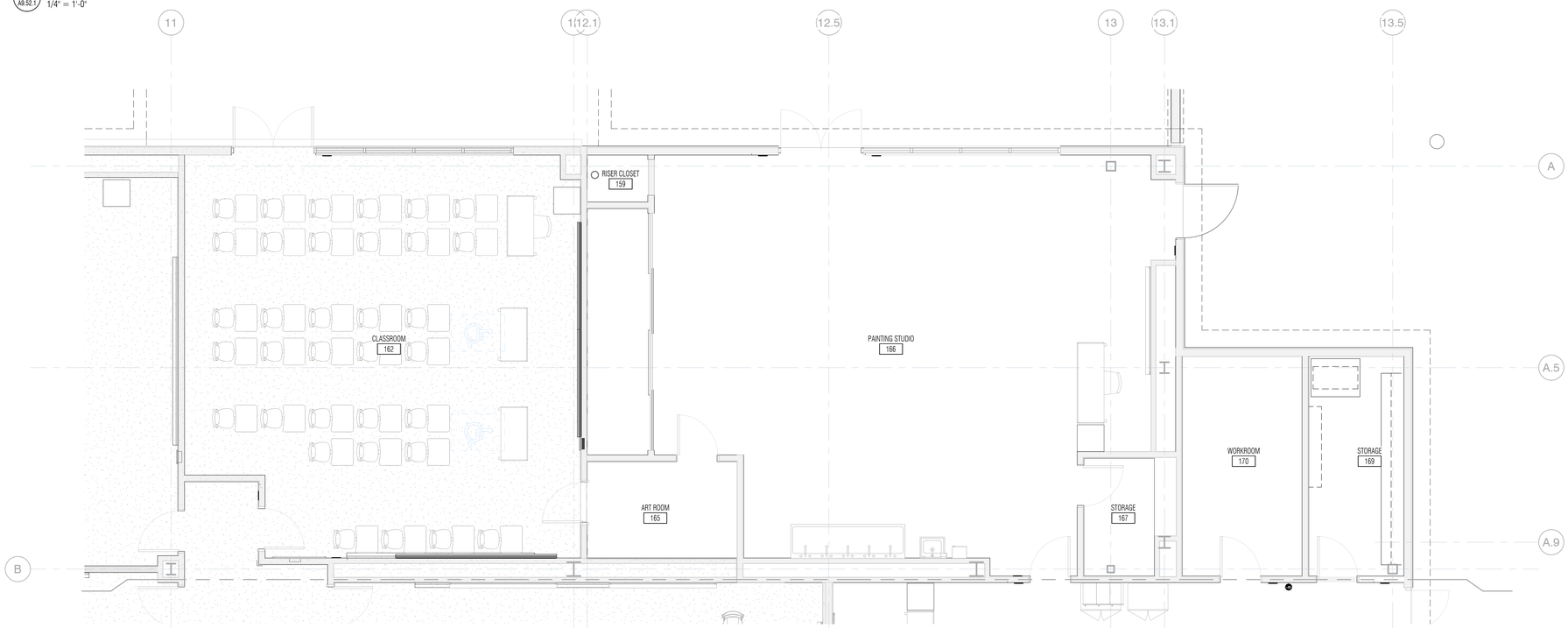

2 A9.52.1 **01 - FURNITURE PLAN - EAST - CLASSROOM - PAINTING STUDIO**
1/4" = 1'-0"

GENERAL NOTES

1. FURNITURE SHOWN IS FOR REFERENCE ONLY. LOOSE FURNITURE, FIXTURE, EQUIPMENT ARE ACQUIRED UNDER A SEPARATE CONTRACT AND FF&E BUDGET. ITEMS SHOWN ARE SCHEMATIC AND SELECTION LAYOUT IS TO BE DETERMINED WITH DISTRICT, AND USER GROUPS
2. DEMOLITION, REMOVAL AND SALVAGE FOR RE-USE FURNITURE IS TO BE DETERMINED WITH DISTRICT AND USER GROUP.

KEY NOTES

Key Value	Keynote Text
12-06	REMOVE AND SALVAGE EXISTING DRAWING TABLES AND STOOLS FOR RE-INSTALLATION

NOLL & TAM ARCHITECTS
729 Heinz Avenue
Berkeley, CA 94710
tel 510.542.2200
fax 510.542.2201

ARCHITECTS SEAL

LICENSED ARCHITECT
CHRISTOPHER NOLL
No. C15916
REN. 12-31-21
STATE OF CALIFORNIA

APPROVALS
FILE NUMBER: 07-C1
DIVISION OF THE STATE ARCHITECT
APP# 01-117630
ACS_____FLS_____SSS_____
Date:

PROJECT TITLE
CONTRA COSTA CCD
D-4002
DVC SAN RAMON CAMPUS EXPANSION & RENOVATION
1690 Watermill Rd.
San Ramon, CA 94582

ISSUE TITLE
INCREMENT 1 - RENOVATION

ISSUE DATE 4/26/19
NOLL & TAM JOB NUMBER 21630
REVISIONS
△ | DATE | DESCRIPTION

SHEET TITLE
FURNITURE PLAN - 1ST FLOOR - EAST - CLASSROOM - PAINTING STUDIO (FOR REFERENCE ONLY)
SHEET NUMBER
A9.52.1

10/11/2021 2:37:41 PM C:\Users\phan.dung\Documents\Revit Locals\DVCSR Expansion_Central 2020_phan.dung@nollandtam.com.rvt

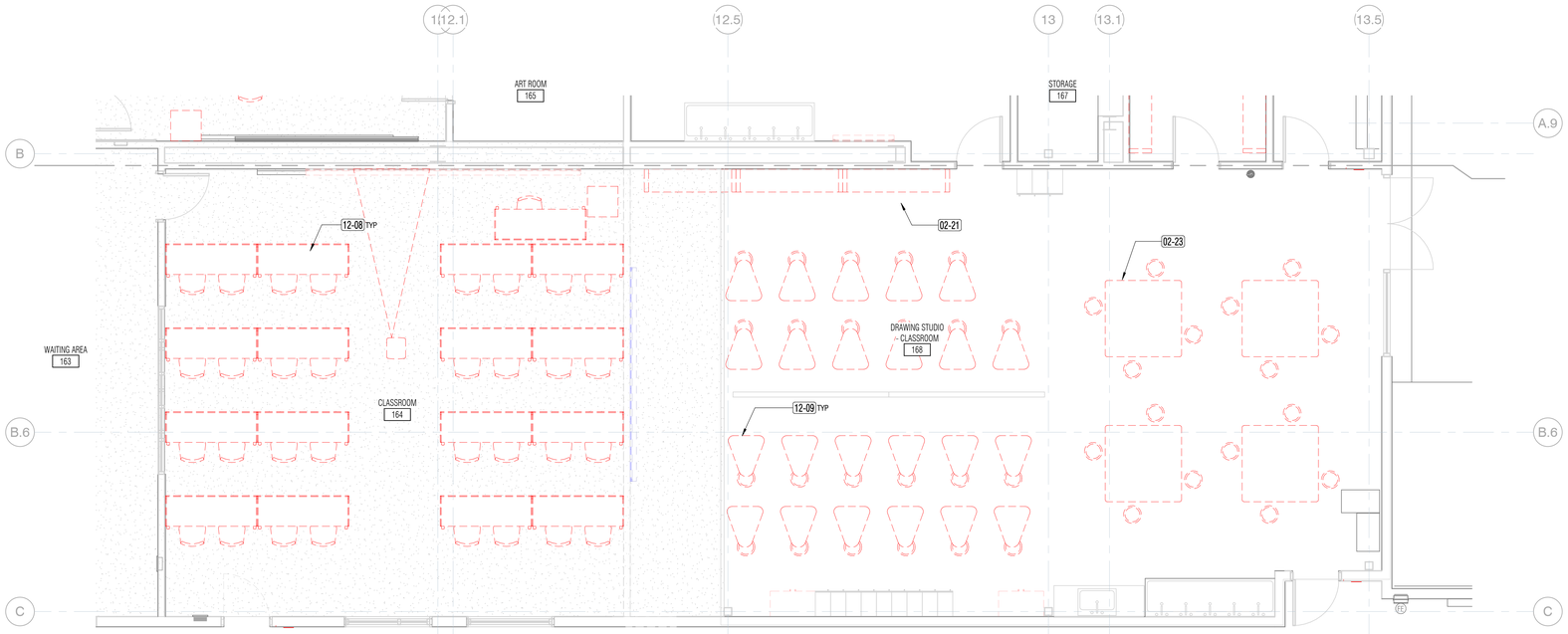

1 A9.53.1 **01 - FURNITURE PLAN - EAST (DEMO) - CERAMIC STUDIO**
1/4" = 1'-0"

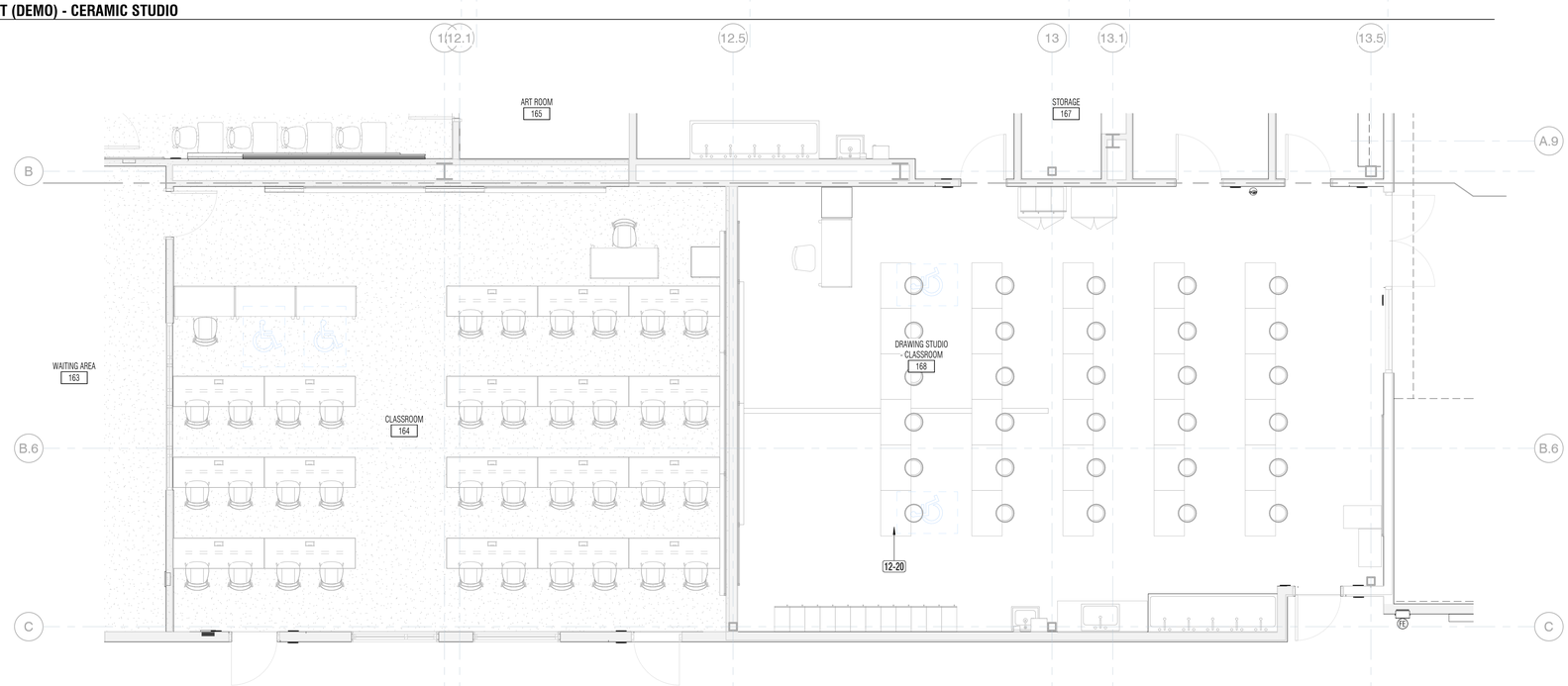

2 A9.53.1 **01 - FURNITURE PLAN - CLASSROOM - DRAWING STUDIO**
1/4" = 1'-0"

GENERAL NOTES

1. FURNITURE SHOWN IS FOR REFERENCE ONLY. LOOSE FURNITURE, FIXTURE, EQUIPMENT ARE ACQUIRED UNDER A SEPARATE CONTRACT AND FF&E BUDGET. ITEMS SHOWN ARE SCHEMATIC AND SELECTION LAYOUT IS TO BE DETERMINED WITH DISTRICT, AND USER GROUPS
2. DEMOLITION, REMOVAL AND SALVAGE FOR RE-USE FURNITURE IS TO BE DETERMINED WITH DISTRICT AND USER GROUP.

KEY NOTES

Key Value	Keynote Text
02-21	REMOVE AND SALVAGE EXISTING HEAVY DUTY SHELVING RACK . COORDINATE RE-USE OR STORAGE OF SHELVES WITH OWNER.
02-23	REMOVE AND SALVAGE (2) OF (4) EXISTING WORK TABLES FOR RE-USE. STORE IN ART YARD
12-08	REMOVE AND SALVAGE EXISTING COMPUTER TABLES FOR RE-INSTALLATION
12-09	REMOVE AND SALVAGE EXISTING POTTERY WHEELS. STORE IN ART YARD. COVER AND PROTECT
12-20	NEW ACCESSIBLE DRAWING STATION

NOLL & TAM ARCHITECTS
729 Heinz Avenue
Berkeley, CA 94710
tel 510.542.2200
fax 510.542.2201

ARCHITECTS SEAL

LICENSED ARCHITECT
CHRISTOPHER NOLL
No. C15916
REN. 12-31-21
STATE OF CALIFORNIA

APPROVALS
FILE NUMBER: 07-C1
DIVISION OF THE STATE ARCHITECT
APP# 01-117630
ACS_____FLS_____SSS_____
Date:

PROJECT TITLE
CONTRA COSTA CCD
D-4002
DVC SAN RAMON CAMPUS EXPANSION & RENOVATION
1690 Watermill Rd.
San Ramon, CA 94582

ISSUE TITLE
INCREMENT 1 - RENOVATION

ISSUE DATE **4/26/19**
NOLL & TAM JOB NUMBER **21630**

REVISIONS
| | DATE | DESCRIPTION |

SHEET TITLE
FURNITURE PLAN - 1ST FLOOR - EAST - CLASSROOM - DRAWING STUDIO (FOR REFERENCE ONLY)

SHEET NUMBER
A9.53.1

10/11/2021 2:37:59 PM C:\Users\phan.dung\Documents\Revit Locals\DVCSR Expansion_Central 2020_phan.dung@nollandtam.com.rvt

GENERAL NOTES

1. FURNITURE SHOWN IS FOR REFERENCE ONLY. LOOSE FURNITURE, FIXTURE, EQUIPMENT ARE ACQUIRED UNDER A SEPARATE CONTRACT AND FF&E BUDGET. ITEMS SHOWN ARE SCHEMATIC AND SELECTION LAYOUT IS TO BE DETERMINED WITH DISTRICT, AND USER GROUPS
2. DEMOLITION, REMOVAL AND SALVAGE FOR RE-USE FURNITURE IS TO BE DETERMINED WITH DISTRICT AND USER GROUP.

KEY NOTES

Key Value	Keynote Text
10-09	NEW GONDOLAS SHELVING-DISPLAY UNITS. ISLAND GONDOLA HEIGHT NOT TO EXCEED 45" HEIGHT
12-34	NEW 72"Lx 19"D WALL MOUNTED UPPER CABINETS TO MATCH CABINETS IN (E) BOOKSTORE
12-35	(2) (E) WALL MOUNTED 36"Lx19"D UPPER CABINETS RELOCATED FROM (E) BOOKSTORE
12-36	NEW 60"Lx12"D WALL MOUNTED UPPER CABINETS TO MATCH CABINETS IN (E) BOOKSTORE

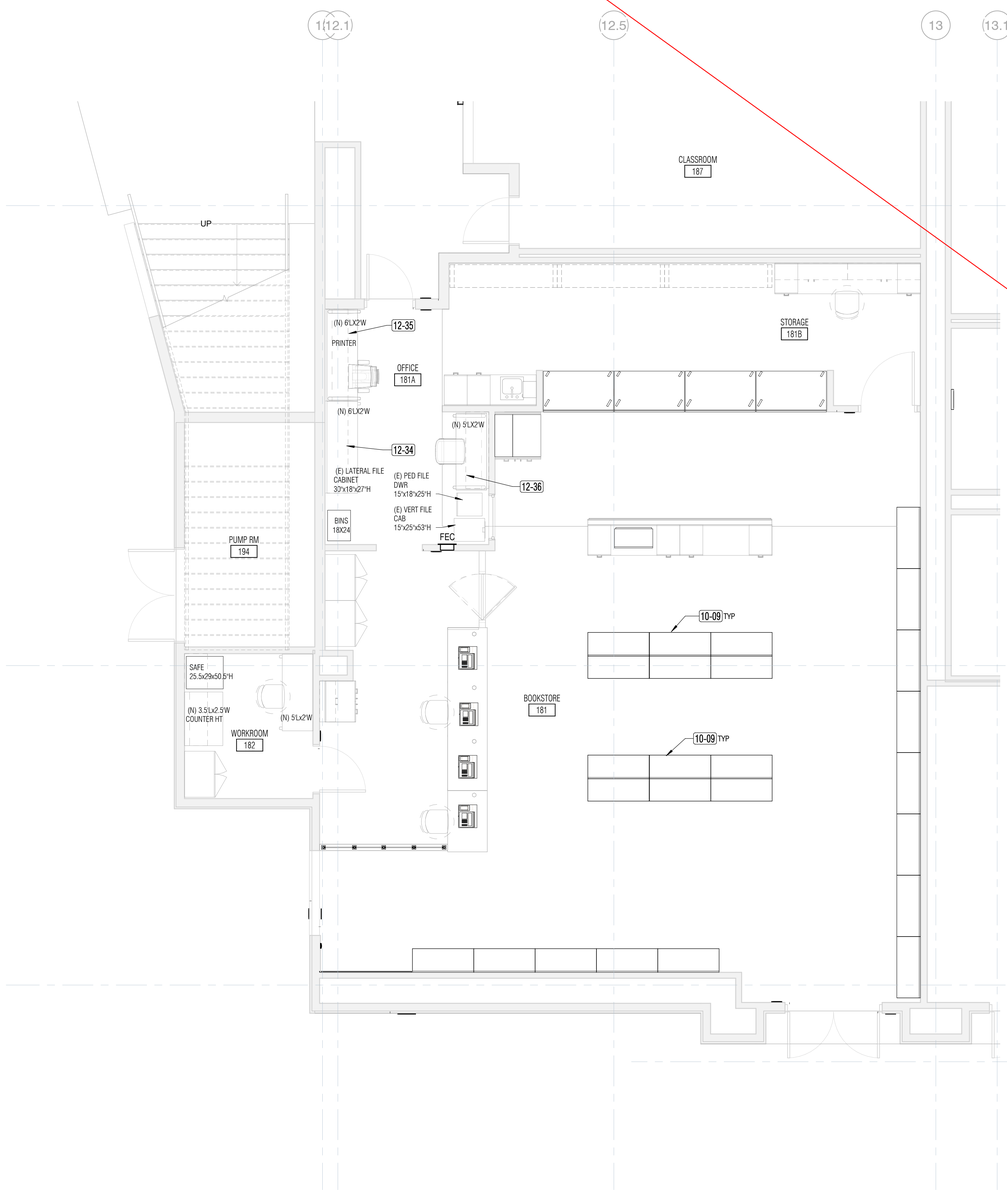

2 A9.54.1 **01 - FURNITURE PLAN - EAST - BOOKSTORE**
1/4" = 1'-0"

REMOVED FROM SCOPE CCDA-8

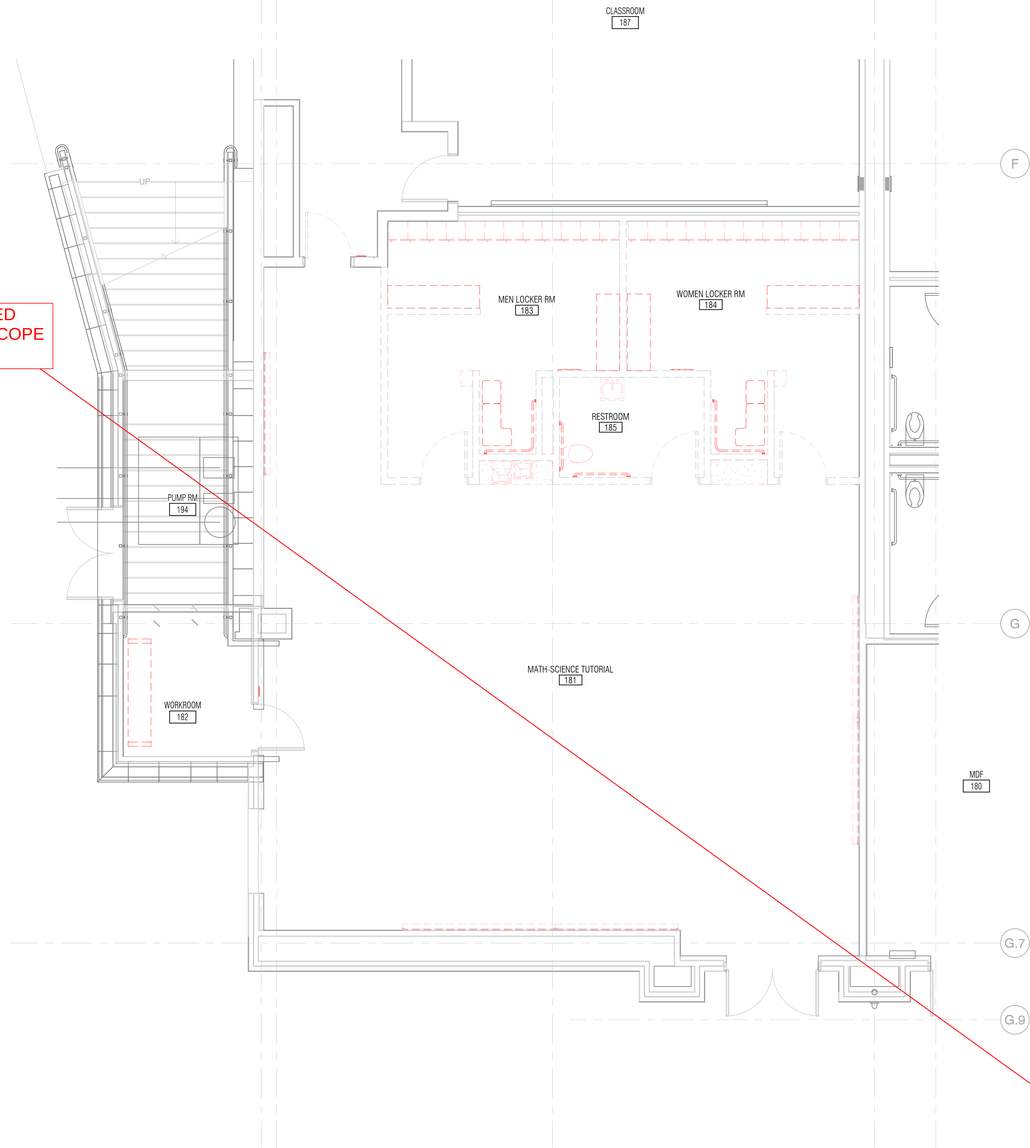

1 A9.54.1 **01 - FURNITURE PLAN - EAST (DEMO) MS TUTORIAL**
1/4" = 1'-0"

NOLL & TAM ARCHITECTS
729 Heinz Avenue
Berkeley, CA 94710
tel 510.542.2200
fax 510.542.2201

ARCHITECTS SEAL

LICENSED ARCHITECT
CHRISTOPHER NOLL
No. C15916
REN. 12-31-21
STATE OF CALIFORNIA

APPROVALS

FILE NUMBER: 07-C1

DIVISION OF THE STATE ARCHITECT
APP# 01-117630
ACS_____FLS_____SSS_____
Date:

PROJECT TITLE

CONTRA COSTA CCD
D-4002
DVC SAN RAMON CAMPUS EXPANSION & RENOVATION

1690 Watermill Rd.
San Ramon, CA 94582

ISSUE TITLE
INCREMENT 1 - RENOVATION

ISSUE DATE **4/26/19**
NOLL & TAM JOB NUMBER **21630**

REVISIONS
| | DATE | DESCRIPTION |

SHEET TITLE
FURNITURE PLAN - 1ST FLOOR - EAST - BOOKSTORE (FOR REFERENCE ONLY)

SHEET NUMBER
A9.54.1

10/11/2021 2:37:55 PM C:\Users\jhan.dung\Documents\Revit Locals\DVCSR Expansion_Central 2020_jhan.dung@nollandtam.com.rvt

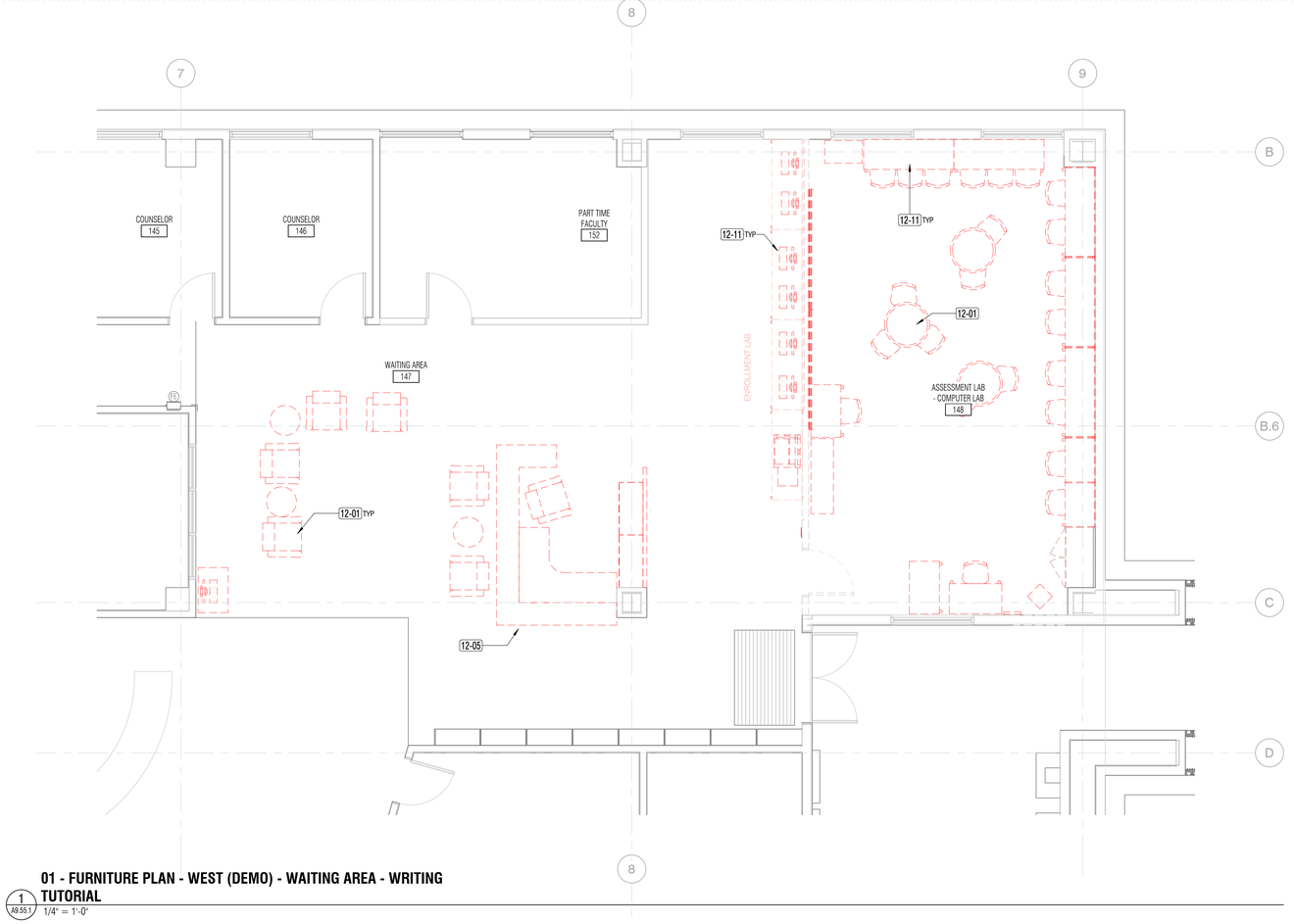

01 - FURNITURE PLAN - WEST (DEMO) - WAITING AREA - WRITING TUTORIAL

1 A9.55.1 1/4" = 1'-0"

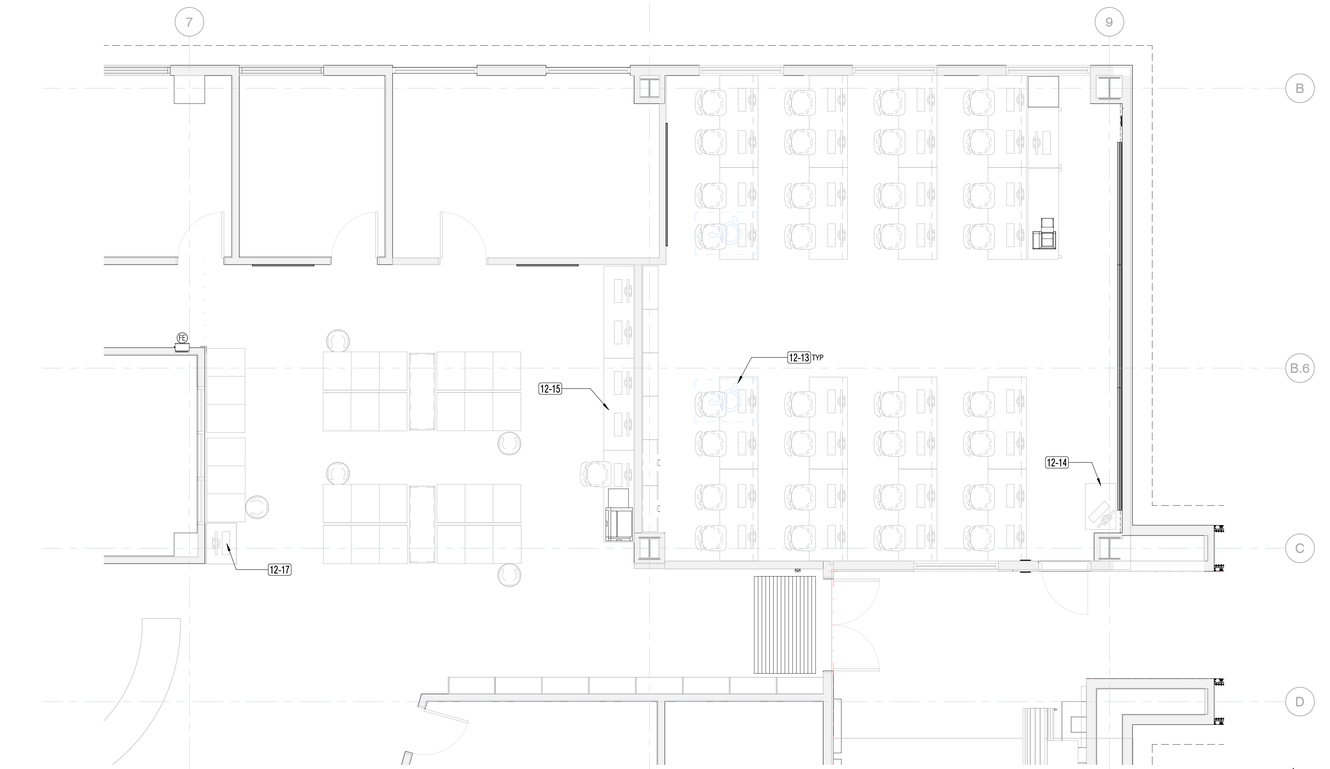

01 - FURNITURE PLAN - WEST - ASSESSMENT - COMPUTER LAB

3 A9.55.1 1/4" = 1'-0"

GENERAL NOTES

1. FURNITURE SHOWN IS FOR REFERENCE ONLY. LOOSE FURNITURE, FIXTURE, EQUIPMENT ARE ACQUIRED UNDER A SEPARATE CONTRACT AND FF&E BUDGET. ITEMS SHOWN ARE SCHEMATIC AND SELECTION LAYOUT IS TO BE DETERMINED WITH DISTRICT, AND USER GROUPS
2. DEMOLITION, REMOVAL AND SALVAGE FOR RE-USE FURNITURE IS TO BE DETERMINED WITH DISTRICT AND USER GROUP.

KEY NOTES

Key Value	Keynote Text
12-01	
12-05	NEW MANUAL PRIVACY WINDOW SHADES w/ PRIVACY BLACKOUT SILLS & CHANNELS, FULL LENGTH OF WINDOW
12-11	
12-13	RELOCATE TABLES AND CHAIRS FROM ROOM 164 TO THIS LOCATION
12-14	NEW ASSESSMENT CHECK-IN COMPUTER STATION
12-15	NEW (4) STANDING HEIGHT COMPUTER STATIONS, (1) ACCESSIBLE STATION WITH PRINTER
12-17	NEW FINANCIAL AID CHECK-IN STATION WITH REAR WIREWAY

NOLL & TAM ARCHITECTS
729 Heinz Avenue
Berkeley, CA 94710
tel 510.542.2200
fax 510.542.2201

ARCHITECTS SEAL

LICENSED ARCHITECT
CHRISTOPHER NOLL
No. C15916
REN. 12-31-21
STATE OF CALIFORNIA

APPROVALS

FILE NUMBER: 07-C1

DIVISION OF THE STATE ARCHITECT

APP# 01-117630

ACS_____FLS_____SSS_____
Date:

PROJECT TITLE

CONTRA COSTA CCD
D-4002
DVC SAN RAMON CAMPUS EXPANSION & RENOVATION

1690 Watermill Rd.
San Ramon, CA 94582

ISSUE TITLE
INCREMENT 1 - RENOVATION

ISSUE DATE 4/26/19
NOLL & TAM JOB NUMBER 21630

REVISIONS
| | DATE | DESCRIPTION |

SHEET TITLE
FURNITURE PLAN - 1ST FLOOR - WEST - ASSESSMENT LAB (FOR REFERENCE ONLY)

SHEET NUMBER
A9.55.1

10/11/2021 2:37:59 PM C:\Users\phan.dung\Documents\Revit Locals\DVCSR Expansion_Central 2020_phan.dung@nollandtam.com.rvt

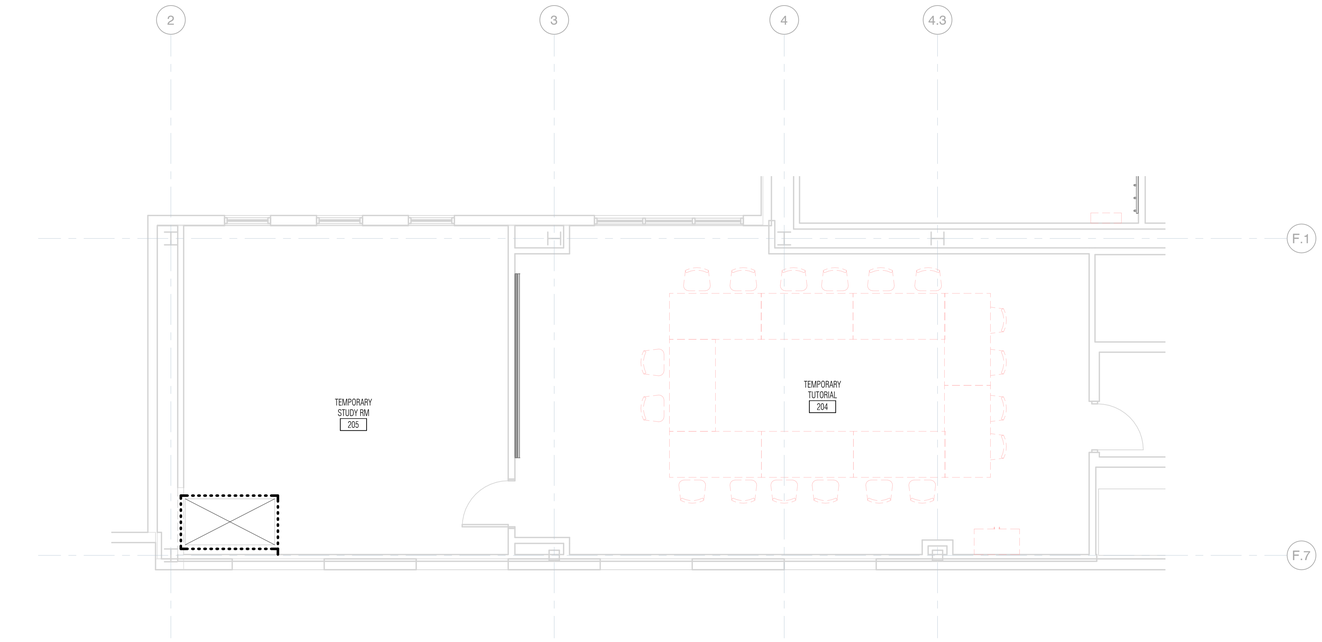

1 A9.56.1 **01 - FURNITURE PLAN - WEST - (DEMO) CONFERENCE - STORAGE ROOM**
1/4" = 1'-0"

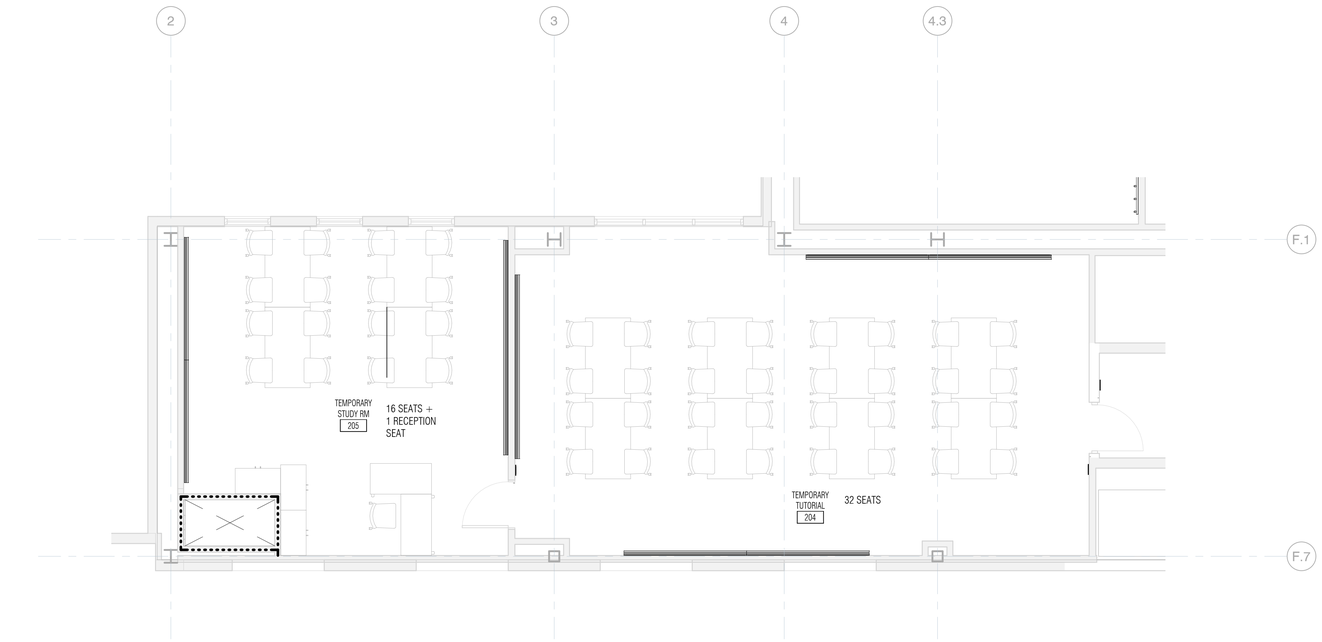

2 A9.56.1 **01 - FURNITURE PLAN - WEST - TEMPORARY TUTORIAL & STUDY ROOM**
1/4" = 1'-0"

0' 2' 4' 8'

N

GENERAL NOTES

1. FURNITURE SHOWN IS FOR REFERENCE ONLY. LOOSE FURNITURE, FIXTURE, EQUIPMENT ARE ACQUIRED UNDER A SEPARATE CONTRACT AND FF&E BUDGET. ITEMS SHOWN ARE SCHEMATIC AND SELECTION LAYOUT IS TO BE DETERMINED WITH DISTRICT, AND USER GROUPS
2. DEMOLITION, REMOVAL AND SALVAGE FOR RE-USE FURNITURE IS TO BE DETERMINED WITH DISTRICT AND USER GROUP.

NOLL & TAM ARCHITECTS
729 Heinz Avenue
Berkeley, CA 94710
tel 510.542.2200
fax 510.542.2201

ARCHITECTS SEAL

LICENSED ARCHITECT
CHRISTOPHER NOLL
No. C15916
REN. 12-31-21
STATE OF CALIFORNIA

APPROVALS
FILE NUMBER: 07-C1
DIVISION OF THE STATE ARCHITECT
APP# 01-117630
ACS_____FLS_____SSS_____
Date:

PROJECT TITLE
CONTRA COSTA CCD
D-4002
DVC SAN RAMON CAMPUS EXPANSION & RENOVATION
1690 Watermill Rd.
San Ramon, CA 94582

ISSUE TITLE
INCREMENT 1 - RENOVATION

ISSUE DATE **4/26/19**
NOLL & TAM JOB NUMBER **21630**

REVISIONS
| DATE | DESCRIPTION

SHEET TITLE
FURNITURE PLAN - 2ND FLOOR - TEMPORARY TUTORIAL SPACE (FOR REFERENCE ONLY)

SHEET NUMBER
A9.56.1

10/11/2021 2:38:01 PM C:\Users\phan.dung\Documents\Revit Locals\DVCSR Expansion_Central 2020_phan.dung@nollandtam.com.rvt

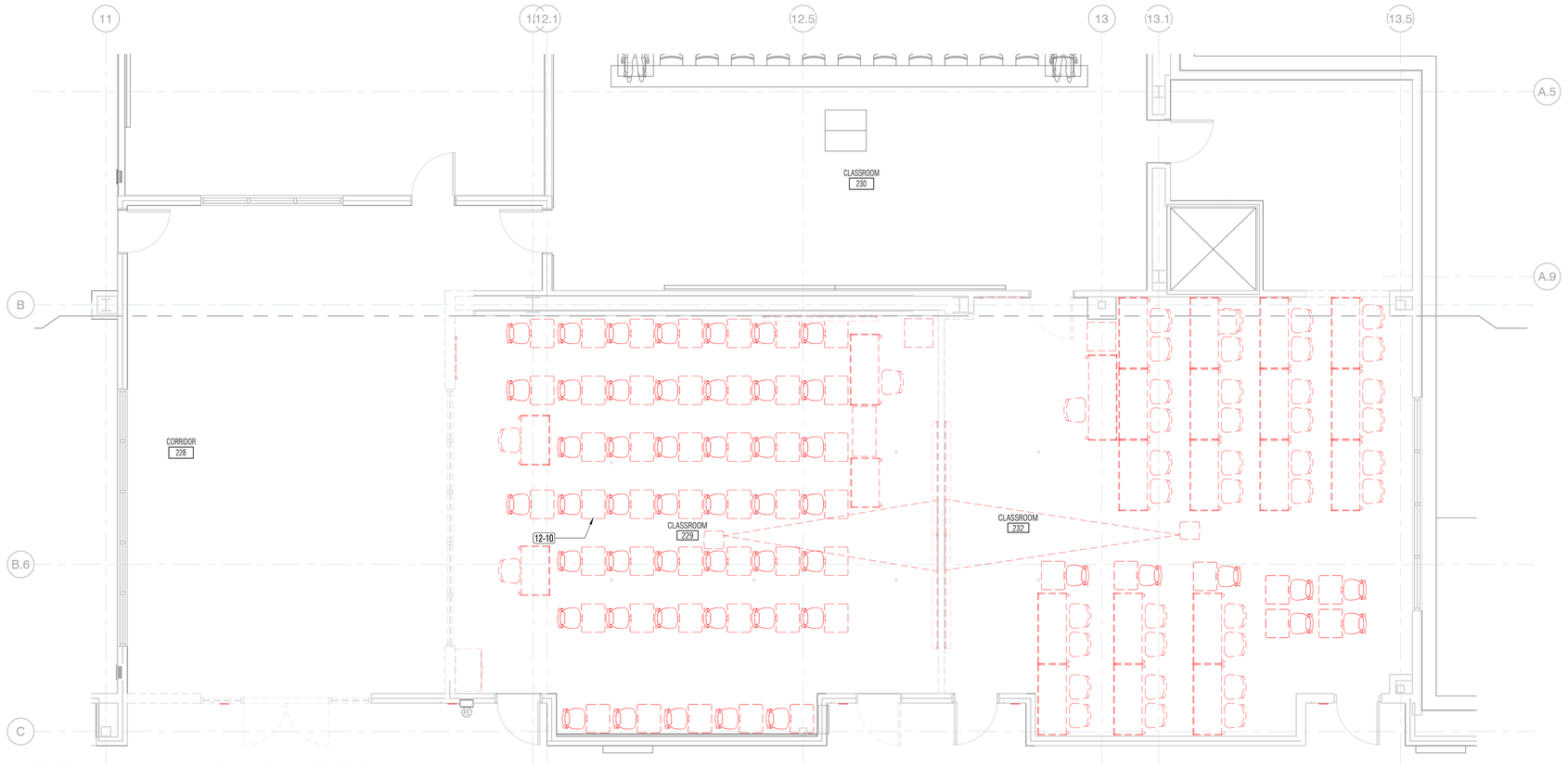

1 A9.57.1 **02 - FURNITURE PLAN - EAST (DEMO) - CLASSROOMS**
1/4" = 1'-0"

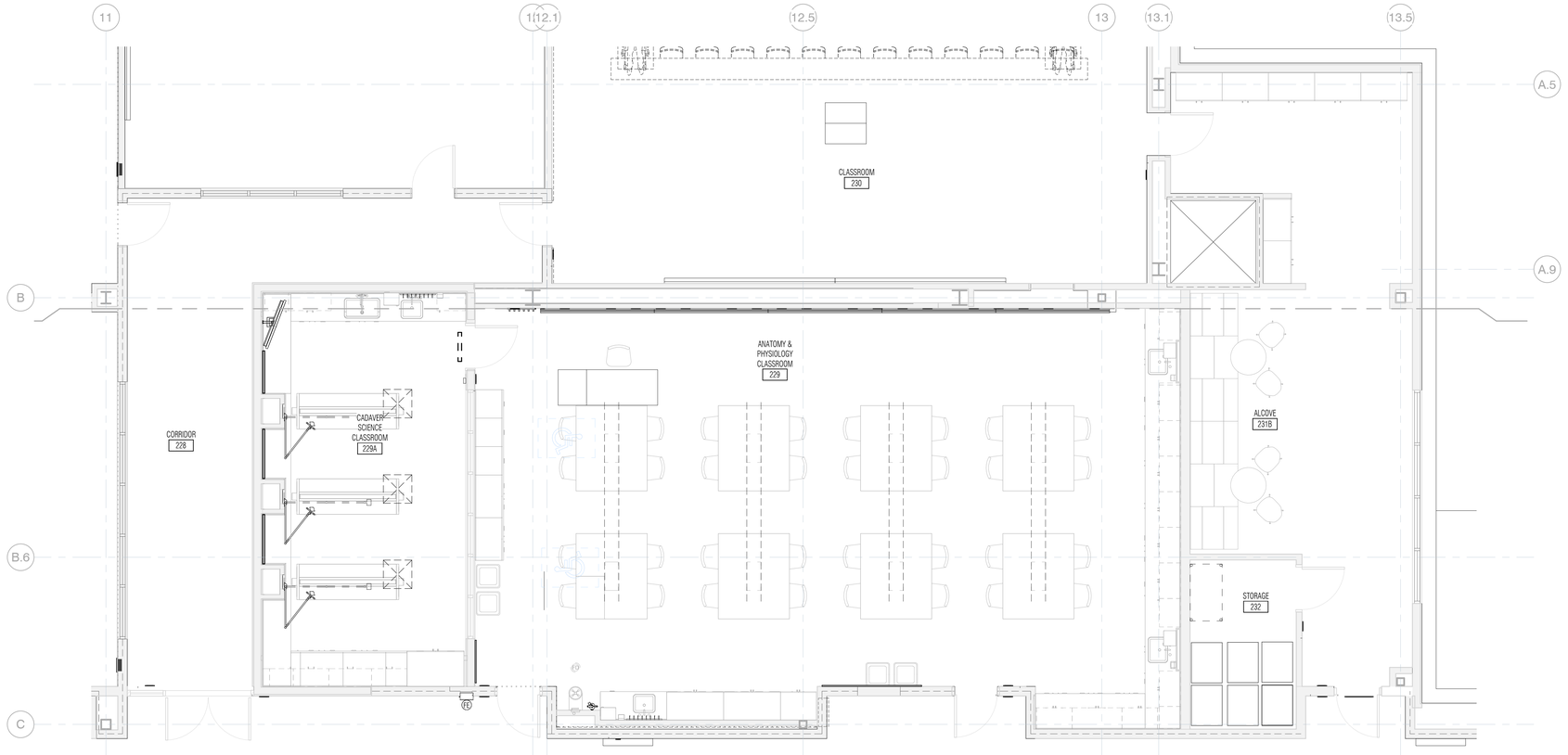

2 A9.57.1 **02 - FURNITURE PLAN - EAST - A&P LAB**
1/4" = 1'-0"

GENERAL NOTES

1. FURNITURE SHOWN IS FOR REFERENCE ONLY. LOOSE FURNITURE, FIXTURE, EQUIPMENT ARE ACQUIRED UNDER A SEPARATE CONTRACT AND FF&E BUDGET. ITEMS SHOWN ARE SCHEMATIC AND SELECTION LAYOUT IS TO BE DETERMINED WITH DISTRICT, AND USER GROUPS
2. DEMOLITION, REMOVAL AND SALVAGE FOR RE-USE FURNITURE IS TO BE DETERMINED WITH DISTRICT AND USER GROUP.

KEY NOTES

Key Value	Keynote Text
12-10	REMOVE AND SALVAGE EXISTING STUDENT DESK INCLUDING ACCESSIBLE DESK FOR RE-INSTALLATION

NOLL & TAM ARCHITECTS
729 Heinz Avenue
Berkeley, CA 94710
tel 510.542.2200
fax 510.542.2201

ARCHITECTS SEAL

LICENSED ARCHITECT
CHRISTOPHER NOLL
No. C15916
REN. 12-31-21
STATE OF CALIFORNIA

APPROVALS
FILE NUMBER: 07-C1
DIVISION OF THE STATE ARCHITECT
APP# 01-117630
ACS_____FLS_____SSS_____
Date:

PROJECT TITLE
CONTRA COSTA CCD
D-4002
DVC SAN RAMON CAMPUS EXPANSION & RENOVATION
1690 Watermill Rd.
San Ramon, CA 94582

ISSUE TITLE
INCREMENT 1 - RENOVATION

ISSUE DATE 4/26/19
NOLL & TAM JOB NUMBER 21630
REVISIONS
△ | DATE | DESCRIPTION

SHEET TITLE
FURNITURE PLAN - 2ND FLOOR - EAST - CLASSROOMS (FOR REFERENCE ONLY)

SHEET NUMBER
A9.57.1

10/11/2021 2:38:06 PM C:\Users\phan.dung\Documents\Revit Locals\DVCSR Expansion_Central 2020_phan.dung@nollandtam.com.rvt

GENERAL NOTES

1. FURNITURE SHOWN IS FOR REFERENCE ONLY. LOOSE FURNITURE, FIXTURE, EQUIPMENT ARE ACQUIRED UNDER A SEPARATE CONTRACT AND FF&E BUDGET. ITEMS SHOWN ARE SCHEMATIC AND SELECTION LAYOUT IS TO BE DETERMINED WITH DISTRICT, AND USER GROUPS
2. DEMOLITION, REMOVAL AND SALVAGE FOR RE-USE FURNITURE IS TO BE DETERMINED WITH DISTRICT AND USER GROUP.

KEY NOTES

Key Value	Keynote Text
12-18	NEW EXTERIOR SITE FURNISHING S- BENCH, TABLES AND CHAIRS, SECURED TO FLOOR

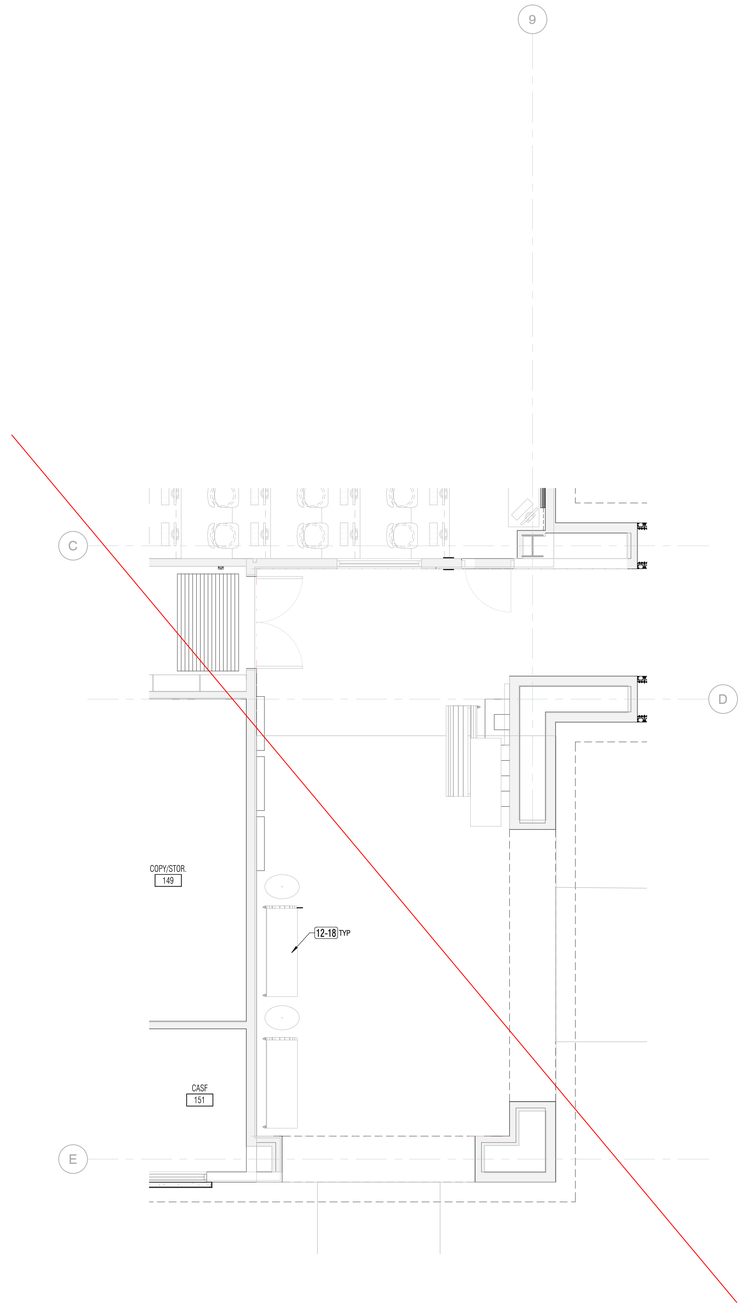

1 A9.58.1 **01 - FURNITURE PLAN - WEST - BREEZEWAY**
1/4" = 1'-0"

NOLL & TAM ARCHITECTS
729 Heinz Avenue
Berkeley, CA 94710
tel 510.542.2200
fax 510.542.2201

ARCHITECTS SEAL

LICENSED ARCHITECT
CHRISTOPHER NOLL
No. C15916
REN. 12-31-21
STATE OF CALIFORNIA

APPROVALS
FILE NUMBER: 07-C1
DIVISION OF THE STATE ARCHITECT
APP# 01-117630
ACS_____FLS_____SSS_____
Date:

PROJECT TITLE
CONTRA COSTA CCD
D-4002
DVC SAN RAMON CAMPUS EXPANSION & RENOVATION
1690 Watermill Rd.
San Ramon, CA 94582

ISSUE TITLE
INCREMENT 1 - RENOVATION

ISSUE DATE 4/26/19
NOLL & TAM JOB NUMBER 21630
REVISIONS
1 | DATE | DESCRIPTION

SHEET TITLE
FURNITURE PLAN - BREEZEWAY (FOR REFERENCE ONLY)

SHEET NUMBER
A9.58.1

10/11/2021 2:38:09 PM C:\Users\phan.dung\Documents\Revit Locals\DVCSR Expansion_Central 2020_phan.dung@nollandtam.com.rvt

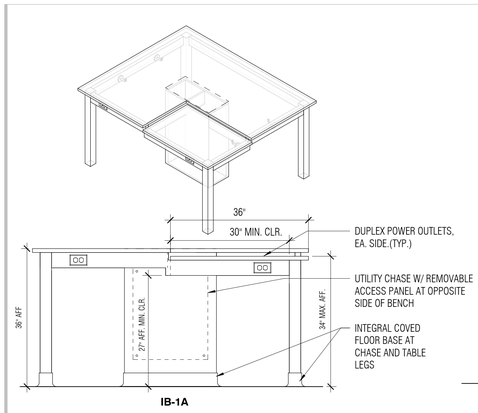

LABORATORY ANATOMY ISLAND BENCH (WOOD) - ACCESSIBLE

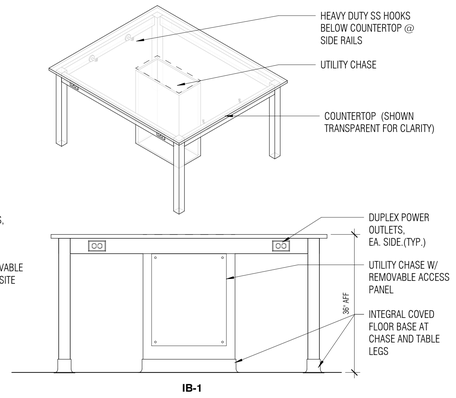

LABORATORY - ANATOMY ISLAND BENCH (WOOD)

WOOD CASEWORK NOTES:

1. ALL ANATOMY & PHYSIOLOGY CASEWORK IS TO BE OF WOOD CONSTRUCTION TO MATCH EXISTING DVC SAN RAMONE CAMPUS LABS CASEWORK, MAPLE WOOD LAMINATE WITH CLEAR FINISH/

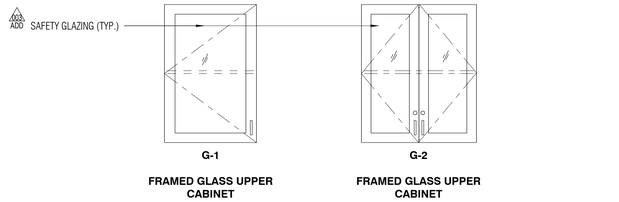

FRAMED GLASS UPPER CABINET (G-1)

FRAMED GLASS UPPER CABINET (G-2)

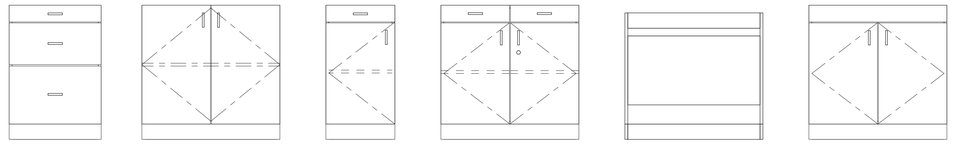

LABORATORY WOOD BASE CABINETS & WALL CABINETS

GENERAL NOTES

1. SEE LABORATORY PLANS & INTERIOR ELEVATIONS FOR SPECIFIC LOCATIONS OF CABINETS.
2. CONTRACTOR SHALL FIELD VERIFY ALL ALL DIMENSIONS PRIOR TO FABRICATION.
3. ALL WALL BENCHTOPS SHALL BE 30" DEEP INCLUDING BACKSPLASH, UON
4. PROVIDE LEVEL CASEWORK & BENCHTOPS. INDICATED ACCESSIBLE BENCHTOP HEIGHTS ARE MAXIMUM ALL ALONG THE INDICATED LENGTH OF THE BENCH. CONTRACTOR TO INVESTIGATE NEW & EXISTING FLOOR SLOPES AND COORDINATE THE WORK TO STAY WITHIN REQUIRED LIMITS. ADD
5. BENCHES AND TABLES SHALL BE 36" HIGH, UON
6. ALL LABORATORY COUNTER AND BENCH TOPS SHALL BE 1" THICK EPOXY, UON.
7. ALL BACKSPLASH, SIDESPLASH AND PIPE DROP CURBS SHALL BE 3/4" THICK. & 4" HIGH.
8. PROVIDE SIDE SPLASH & AT ALL BENCH TOPS ABUTTING ADJACENT WALLS OR METAL CABINETS
9. SEAL ALL SPLASHES AT ABUTTING WALL WITH CLEAR SEALANT.
10. PROVIDE FILLER PANELS MATCHING CASEWORK MATERIALS AND FINISH. FILLER PANELS ARE TO BE FLUSH WITH FACE OF DOOR. SCRIBE FILLER PANEL TO WALL AND SEAL.
11. OVERALL BENCHTOP LENGTHS SHALL BE DETERMINED BY CASEWORK SIZES AND DIMENSIONS AS INDICATED ON PLANS AND ELEVATIONS. TOPS SHALL OVERHANG 1/2" AT OPEN ENDS.
12. PROVIDE AND INSTALL CLOSURE PANELS BETWEEN BACK OF OPEN CABINETS AND WALLS
13. CONTINUE FLOOR AND BASE FINISHES INTO AND AROUND THE INTERIOR OF OPEN CABINETS
14. THE OWNER'S REPRESENTATIVE WILL SELECT COLORS FOR ALL COMPONENTS OF PROJECT INDICATED ON THESE DRAWINGS
15. EMERGENCY SHOWER / EYE WASH SHALL COMPLY WITH ANSI STANDARDS FOR ACCESSIBILITY BY THE PHYSICALLY DISABLED. SAFETY SHOWER EYE/WASH SHALL BE FURNISHED UNDER DIVISION 11 FOR INSTALLATION.
16. ALL MISCELLAENOUS CHANNELS, BRACKETS AND FITTINGS INDICATED ON ALL LABORATORY DRAWINGS SHALL BE SUPPLIED, INSTALLED AND PAINTED UNDER DIVISION 11, UON.
17. ALL GLAZING IN CASEWORK TO BE LAMINATED TEMPERED SAFETY GLASS
18. CONTRACTOR SHALL EXAMINE ALL LABORATORY PLANDS AND DRAWINGS AND COORDINATE WITH REFLECTED CEILING PLANS FOR PROPER CEILING HEIGHTS AND PIPE DROP ENCLOSURE HEIGHTS AND LOCATION

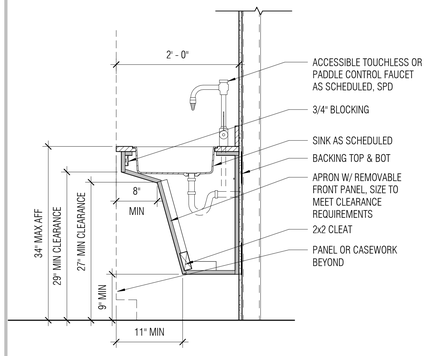

18 Q0.02.1 **ACCESSIBLE SINK APRON DETAIL @ SINK SK-2 (WOOD)**
1" = 1'-0"

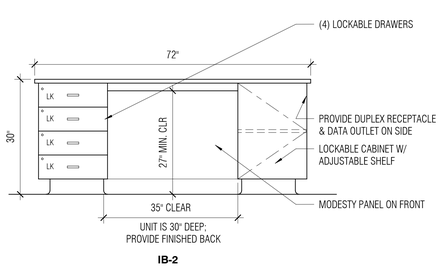

NOTE:
KNEE OPENINGS AT STATIONS DESIGNATED FOR DISABLED ACCESS SHALL BE MINIMUM: 30" WIDE, 27" HIGH, 30" DEEP

INSTRUCTOR'S BENCH (WOOD)

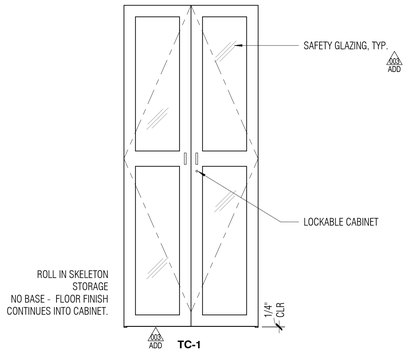

HINGED FRAMED GLASS DOORS: MICROSCOPE STORAGE

ANATOMY TALL CABINET (WOOD)

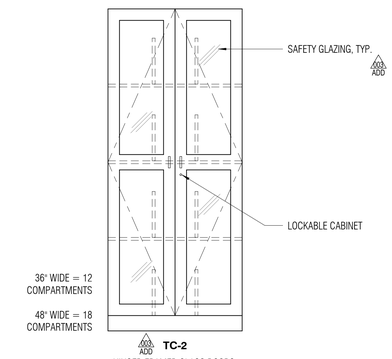

HINGED FRAMED GLASS DOORS: MICROSCOPE STORAGE

MICROSCOPE CABINETS (WOOD)

METAL CASEWORK NOTES:

1. ALL CADAVER LAB METAL CASEWORK TO BE OF FLUSH OVERLAY CONSTRUCTION
2. ALL BASE CABNETS HAVE NO BASE AND SIT ON A CONCRETE CURB OR ARE WALL HUNG

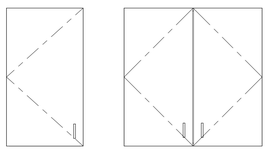

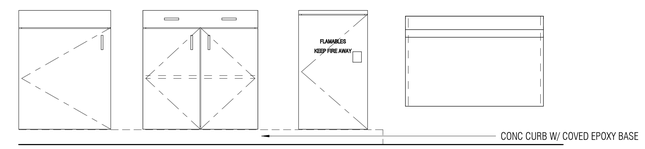

LABORATORY METAL BASE CABINETS & WALL CABINETS

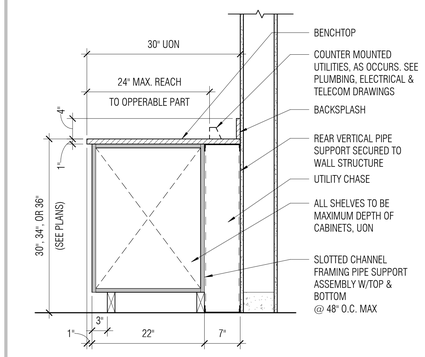

19 Q0.02.1 **WALL MOUNTED CONVENTIONAL CASEWORK DETAIL**
1" = 1'-0"

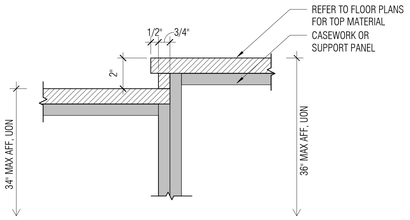

15 Q0.02.1 **BENCHTOP TRANSITION @ ADA ISLAND**
3" = 1'-0"

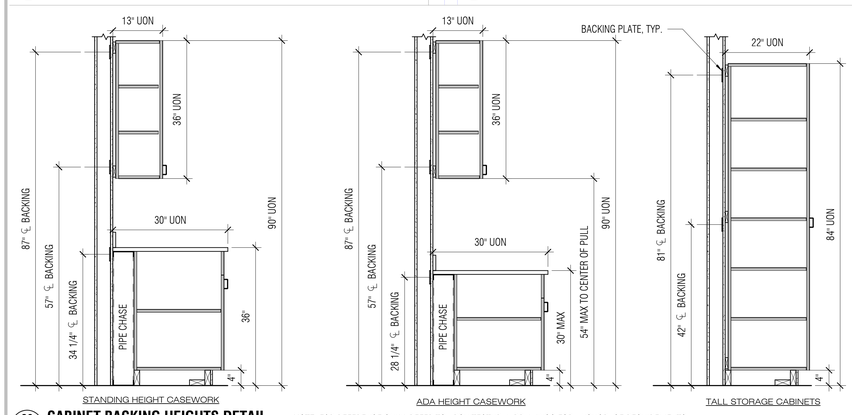

20 Q0.02.1 **CABINET BACKING HEIGHTS DETAIL**
3/4" = 1'-0"

NOTE: FOR REFERENCE ONLY; REFER TO ARCHITECTURAL DRAWINGS FOR ANCHORAGE REQUIREMENTS

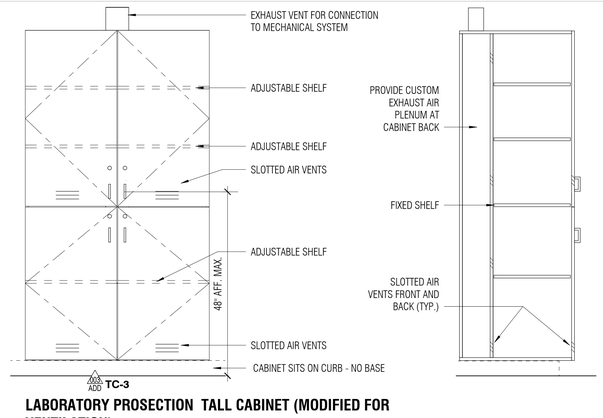

LABORATORY PROSECTION TALL CABINET (MODIFIED FOR VENTILATION)

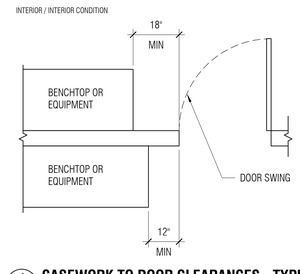

4 Q0.02.1 **CASEWORK TO DOOR CLEARANCES - TYPICAL**
1/2" = 1'-0"

NOLL & TAM ARCHITECTS
729 Heinz Avenue
Berkeley, CA 94710
tel 510.542.2200
fax 510.542.2201

ARCHITECTS SEAL

LICENSED ARCHITECT
CHRISTOPHER NOLL
No. C15916
REN. 12-31-21
STATE OF CALIFORNIA

APPROVALS

FILE NUMBER: 07-C1

DIVISION OF THE STATE ARCHITECT
APP# 01-117630
ACS_____ FLS_____ SSS_____
Date:

PROJECT TITLE

CONTRA COSTA CCD
D-4002
DVC SAN RAMON CAMPUS EXPANSION & RENOVATION

1690 Watermill Rd.
San Ramon, CA 94582

ISSUE TITLE
INCREMENT 1 - RENOVATION

ISSUE DATE: 4/26/19
NOLL & TAM JOB NUMBER: 21630

REVISIONS

	DATE	DESCRIPTION
1	1/30/19	BID ADDENDUM 3

SHEET TITLE
LABORATORY - FURNISHINGS SCHEDULE & DETAILS

SHEET NUMBER
Q0.02.1

10/11/2021 2:38:15 PM C:\Users\phan.dung\Documents\Revit Locals\DVCSR Expansion_Central 2020_phan.dung@nollandtam.com.rvt

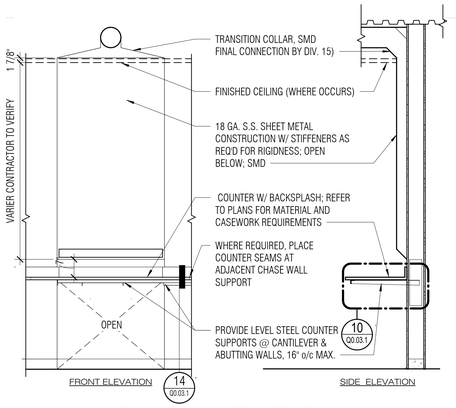

13 Q0.03.1 LOW SLOT EXHAUST & COUNTER SUPPORT

1/2" = 1'-0"

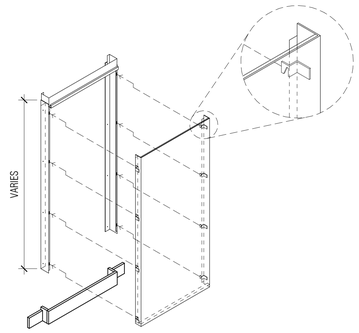

9 Q0.03.1 PIPE DROP ASSEMBLY VIEW

1/2" = 1'-0"

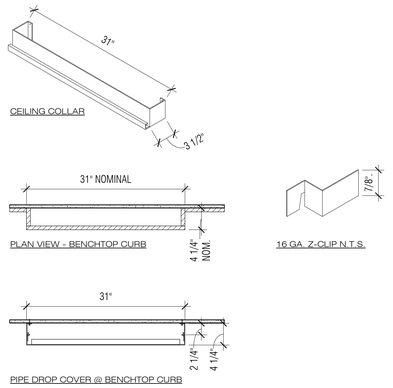

5 Q0.03.1 PLUMBING CHASE ENCLOSURE

1" = 1'-0"

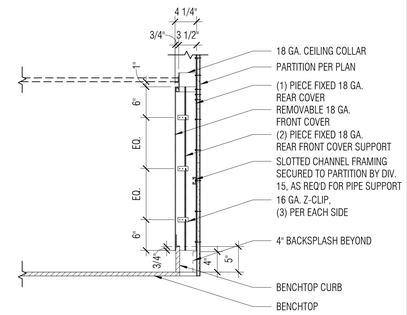

1 Q0.03.1 PLUMBING CHASE ENCLOSURE SECTION

1" = 1'-0"

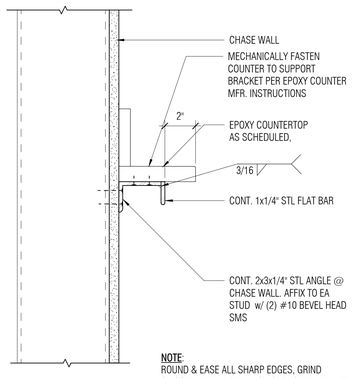

14 Q0.03.1 CANTILEVERED COUNTERTOP SUPPORT @ CHASE

3" = 1'-0"

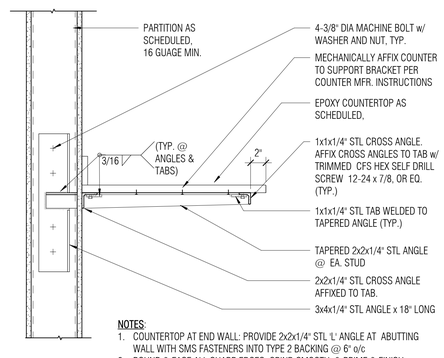

10 Q0.03.1 CANTILEVERED COUNTERTOP SUPPORT

1 1/2" = 1'-0"

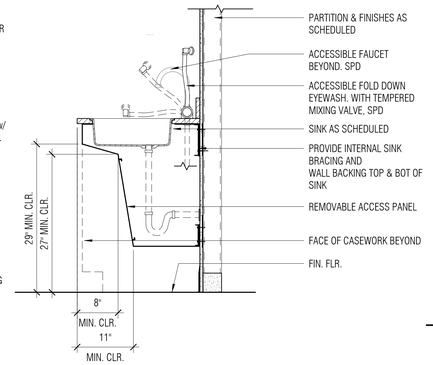

6 Q0.03.1 ACCESSIBLE SINK APRON DETAIL @ SINK SK-4 (METAL)

1" = 1'-0"

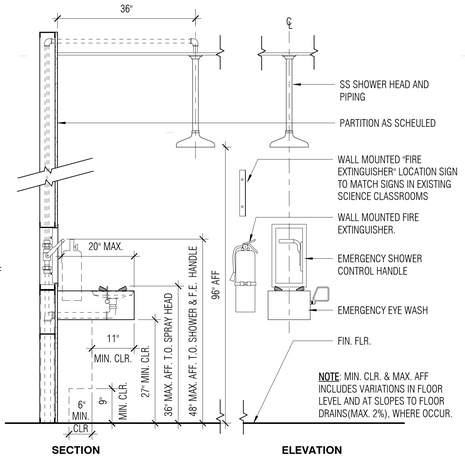

2 Q0.03.1 ACCESSIBLE SAFETY STATION

3/4" = 1'-0"

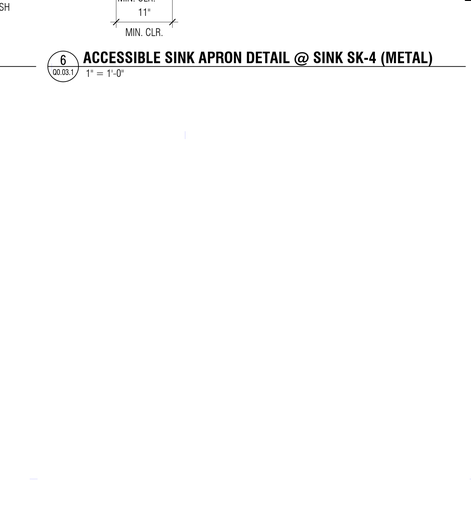

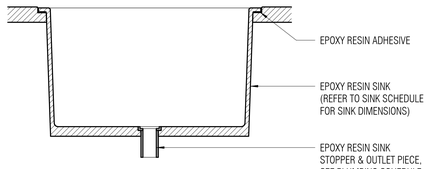

8 Q0.03.1 EPOXY RESIN DROP-IN SINK

3" = 1'-0"

4 Q0.03.1 TYPICAL FIXTURE SPACING @ SINK

3/4" = 1'-0"

NOLL & TAM ARCHITECTS
729 Heinz Avenue
Berkeley, CA 94710
tel 510.542.2200
fax 510.542.2201

ARCHITECTS SEAL

LICENSED ARCHITECT
CHRISTOPHER NOLL
No. C15916
REN. 12-31-21
STATE OF CALIFORNIA

APPROVALS

FILE NUMBER: 07-C1

DIVISION OF THE STATE ARCHITECT
APP# 01-117630
ACS_____FLS_____SSS_____
Date:

PROJECT TITLE

CONTRA COSTA CCD
D-4002
DVC SAN RAMON CAMPUS EXPANSION & RENOVATION

1690 Watermill Rd.
San Ramon, CA 94582

ISSUE TITLE
INCREMENT 1 - RENOVATION

ISSUE DATE 4/26/19
NOLL & TAM JOB NUMBER 21630

REVISIONS
| | DATE | DESCRIPTION |

SHEET TITLE
LABORATORY - FURNISHINGS SCHEDULE & DETAILS

SHEET NUMBER
Q0.03.1

10/11/2021 2:39:18 PM C:\Users\phan.dung\Documents\Revit Local\DVCSR Expansion_Central 2020_phan.dung@nollandtam.com.rvt

COUNTERTOP SCHEDULE

COUNTERTOP SCHEDULE	TYPE	A DEPTH (NOMINAL)	B SPLASH	C HEIGHT A.F.F.	MATERIAL	COLOR	COMMENTS
PROVIDE COUNTER SUPPORTS WHEN SPAN BETWEEN CABINETS EXCEEDS 4'-0". / SIDE FILLER PANEL, WHERE OCCURS / LOCATION OF BACK PANEL, WHERE OCCURS	C-A1	24"	4"	33.5"	EPOXY	BLACK	CBC CH 11B ACCESSIBLE STATIONS & COUNTERS
	C-S1	30" (UON)	4"	36"	EPOXY	BLACK	STANDING HEIGHT COUNTERS

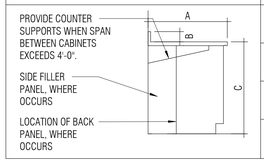

COUNTERTOP GENERAL NOTES

1. EPOXY COUNTERS TO BE 1" THICK
2. ALL JOINTS TO BE 1/8" WIDE, SEALED.
3. ALL BACKSPLASHES, PIPE UMBILICAL CHASE CURBS, & SIDE SPLASHES TO BE 3/4" THICK, 4" HIGH
4. PROVIDE SIDE SPLASH WHERE ADJACENT TO PARTITION OR EQUIPMENT
5. DRIP EDGE TYPICAL FOR ALL FRONT AND EXPOSED EDGES.
6. ALL EXPOSED-TO-VIEW COUNTERTOP EDGES, BACKS OF SPLASHES, ALL EDGES OF TABLES, BACKS OF COUNTERTOPS AND SPLASHES SHALL BE CAULKED, FILLED SEALED AND FINISHED BY LAB FURNISHINGS CONTRACTOR
7. ALL PENETRATIONS THROUGH COUNTERTOP SHALL BE CAULKED BY LAB FURNISHINGS CONTRACTOR WITH APPROVED SEALANT.

LABORATORY SINK SCHEDULE

SINK ID	LENGTH	WIDTH	DEPTH	COLOR	SINK MATERIAL	SINK TYPE	COMMENTS
SK-1	21"	16"	12"	MATCH TO COUNTER	EPOXY	DROP IN EPOXY SEALED TO EPOXY COUNTER	
SK-2	18"	15"	5"	MATCH TO COUNTER	EPOXY	DROP IN EPOXY SEALED TO EPOXY COUNTER	PROVIDE CBC CH 11B ACCESSIBLE COMPLIANT SINK
SK-3	28"	15"	11.8"	MATCH TO COUNTER	EPOXY	DROP IN EPOXY SEALED TO EPOXY COUNTER	
SK-4	18	15	5			DROP IN EPOXY SEALED TO EPOXY COUNTER	PROVIDE CBC CH 11B ACCESSIBLE COMPLIANT SINK

SINK SCHEDULE NOTES:
DIMENSIONS ARE INSIDE CLEAR BOWL DIMENSIONS
LENGTH - SIDE TO SIDE
WIDTH - FRONT TO BACK
DEPTH - TOP TO BOTTOM

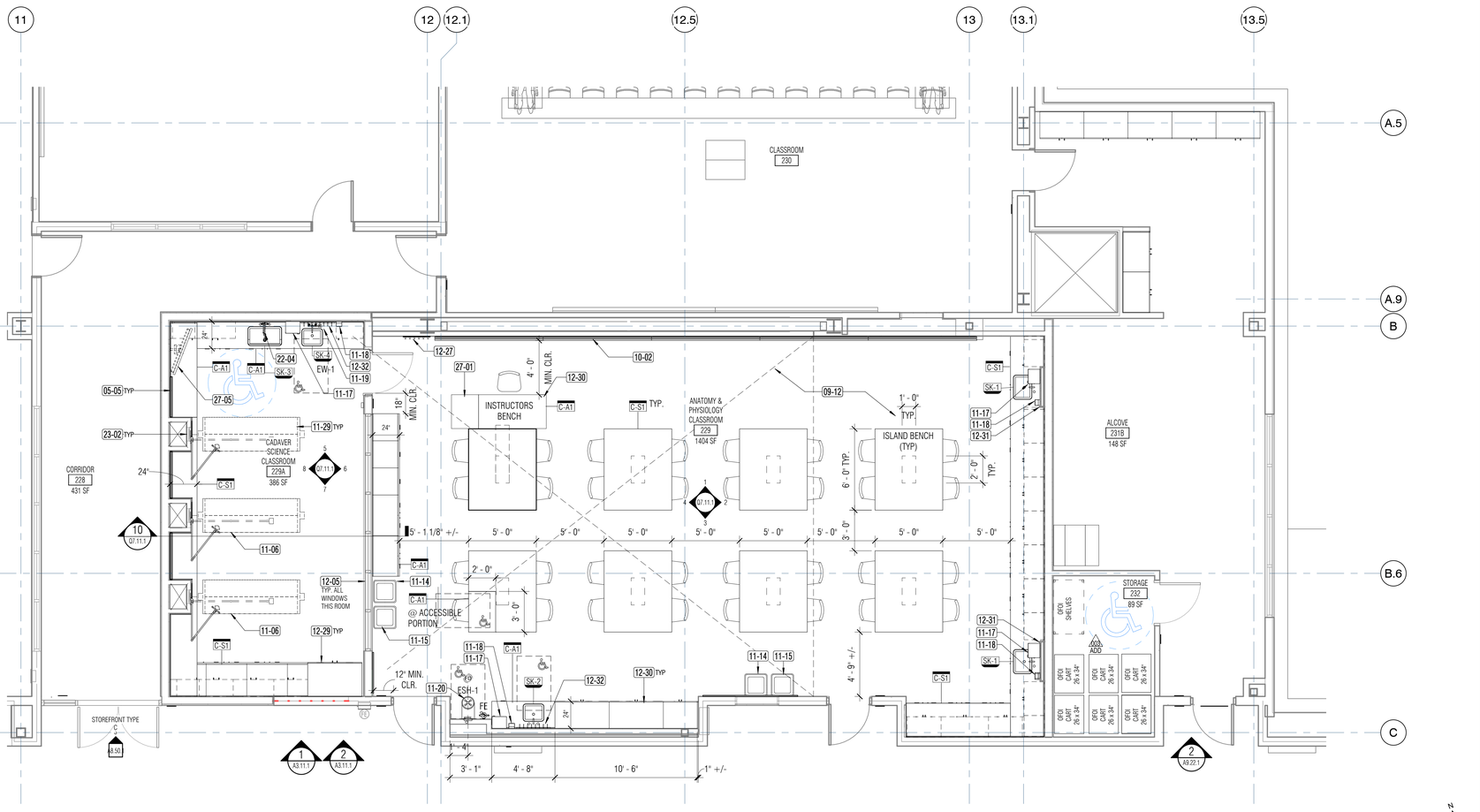

1 02.37.1 02 - LABORATORY PLAN - EAST - A&P
1/4" = 1'-0"

0' 2' 4' 8'

GENERAL NOTES

1. SEE ROOM FINISH SCHEDULE FOR ADDITIONAL INFORMATION.
2. SEE ELECTRICAL DRAWINGS FOR ADDITIONAL INFORMATION
3. SEE MECHANICAL DRAWINGS FOR ADDITIONAL INFORMATION
4. SEE LABORATORY FURNISHINGS SCHEDULES & DETAILS, SHEETS Q0.02.1 & Q0.03.1, FOR TYPICAL LABORATORY DETAILS APPLICABLE TO THE WORK SHOWN ON THIS SHEET.

KEY NOTES

Key Value	Keynote Text
05-05	NEW SURFACE MOUNT STAINLESS STEEL SLOT EXHAUST @ 3" ABOVE BACKSPLASH, SEE LAB PLANS & SMD
09-12	NEW CLEANABLE - NON-ABSORBENT CEILING SYSTEM WITH 2X4 PANELS (CEILING ABOVE, SEE RCP)
10-02	NEW MARKERBOARD
11-06	OFCI- STAINLESS STEEL CADAVER TABLE.
11-14	RECYCLE BIN (OWNER INSTALLED)
11-15	WASTE BIN (OWNER INSTALLED)
11-17	OFCI - PAPER TOWEL DISPENSER, KIMBERLY-CLARK MOD.34346, PROVIDE BACKING @ GYP. BD & METAL STUD WALLS
11-18	OFCI - SOAP DISPENSER, GOJO SOAP DISPENSER # IS 0884-06-BCE14YL, PROVIDE BACKING @ GYP. BD & METAL STUD WALLS
11-19	NEW FOLD DOWN EMERGENCY EYE WASH, SEE 6/Q0.03.1 & SPD
11-20	NEW ACCESSIBLE SAFETY STATION w/ EMERGENCY EYE WASH/SAFETY SHOWER, SPD & FIRE EXTINGUISHER. SEE DETAIL 2/Q0.03.1 & SPD
11-29	OFCI- ADJUSTABLE HEIGHT STAINLESS STEEL CADAVER TABLE.
12-05	NEW MANUAL PRIVACY WINDOW SHADES w/ PRIVACY BLACKOUT SILLS & CHANNELS, FULL LENGTH OF WINDOW
12-27	NEW STAINLESS STEEL COAT HOOK STRIPS. PROVIDE BACKING
12-29	NEW PAINTED STEEL LABORATORY CASEWORK w/ EPOXY COUNTERS (TYPICAL @ CADAVER LAB) - SEE LABORATORY ELEVATIONS
12-30	NEW WOOD LABORATORY CASEWORK w/ EPOXY COUNTERS (TYPICAL @ ANATOMY / PHYSIOLOGY LAB) - SEE LABORATORY ELEVATIONS
12-31	PLUMBING CHASE ENCLOSURE
12-32	NEW PEGBOARD DRYING RACK. REMOVE PEGS THAT CONFLICT WITH PLUMBING FIXTURES & PLUG MOUNTING HOLE WITH A TRIMED OR BLANK PEG.
22-04	NEW PRE-RINSE SPRAYER WITH FAUCET. PROVIDE WALL BACKING FOR UPRIGHT SUPPORT AS REQUIRED. SPD.
23-02	NEW EXHAUST AIR DUCT w/ QUICK CONNECT ATTACHMENT FOR VENTILATED CADAVER TABLE. CONTRACTOR TO COORDINATE DUCT HEIGHT WITH CADAVER TABLE VENDOR SHOP DRAWINGS. (SMD)
27-01	NEW DISTRICT STANDARD AV BLACKBOX, SEE TELECOM DWGS
27-05 (ASI-006)	OFCI CCTV MONITOR, PROVIDE BACKING FOR MONITOR MOUNTING BRACKET, SEE TELECOM & ELECTRICAL DRAWINGS

LABORATORY SYMBOLS LEGEND

- 1t — COUNTER TOP TAG - SEE COUNTER TOP SCHEDULE
- SK-1 — SINK TAG - SEE LABORATORY SINK SCHEDULE
- EW — EYE WASH AT SINK, WHERE OCCURS
- EW/ES — EYE WASH - EMERGENCY SHOWER. SEE DIVISION 12 & PLUMBING DRAWINGS
- FD — FLOOR DRAIN
- ACCESSIBLE STATION. PER CBC CH. 11B REQUIREMENTS
- MIN. 60" REQUIRED CLEAR TURN RADIUS

NOLL & TAM ARCHITECTS
729 Heinz Avenue
Berkeley, CA 94710
tel 510.542.2200
fax 510.542.2201

ARCHITECTS SEAL

LICENSED ARCHITECT
CHRISTOPHER NOLL
No. C15916
REN. 12-31-21
STATE OF CALIFORNIA

APPROVALS
FILE NUMBER: 07-C1
DIVISION OF THE STATE ARCHITECT
APP# 01-117630
ACS_____FLS_____SSS_____
Date:

PROJECT TITLE
CONTRA COSTA CCD
D-4002
DVC SAN RAMON CAMPUS EXPANSION & RENOVATION
1690 Watermill Rd.
San Ramon, CA 94582

ISSUE TITLE
INCREMENT 1 - RENOVATION

ISSUE DATE 4/26/19
NOLL & TAM JOB NUMBER 21630

REVISIONS

	DATE	DESCRIPTION
1	1/30/19	BID ADDENDUM 3
	4/19/19	CADAVER LAB AV REV

SHEET TITLE
LABORATORY - 2ND FLOOR - EAST - A&P PLANS

SHEET NUMBER
Q2.37.1

10/11/2021 2:39:25 PM C:\Users\phan.dung\Documents\Revit Locals\DVCSR Expansion_Central 2020_phan.dung@nollandtam.com.rvt

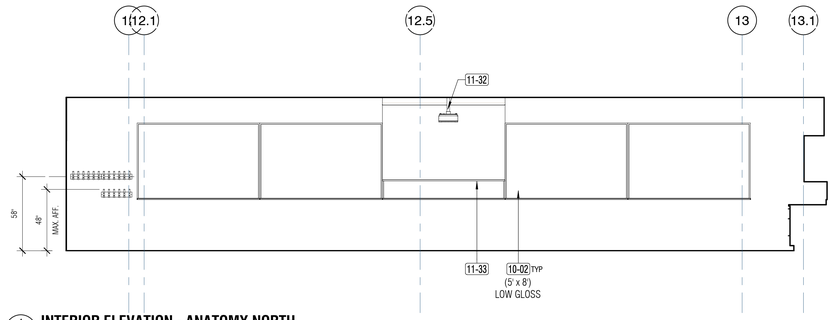

1 07.11.1 **INTERIOR ELEVATION - ANATOMY NORTH**
1/4" = 1'-0"

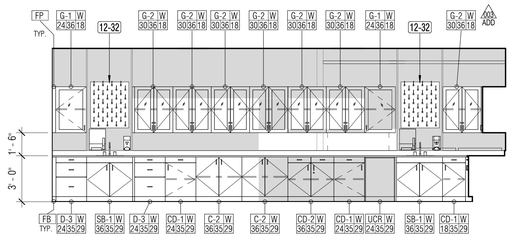

2 07.11.1 **INTERIOR ELEVATION - ANATOMY EAST**
1/4" = 1'-0"

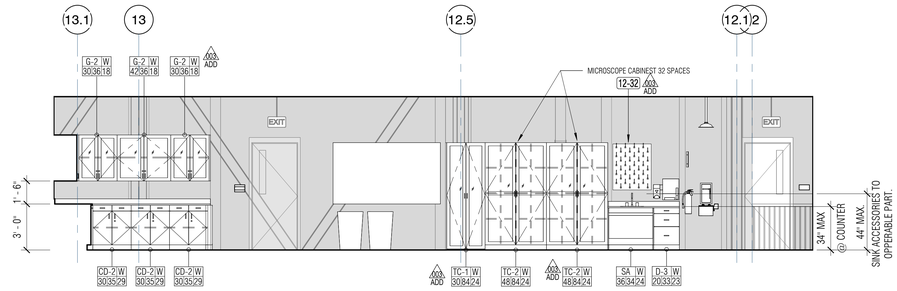

3 07.11.1 **INTERIOR ELEVATION - ANATOMY SOUTH**
1/4" = 1'-0"

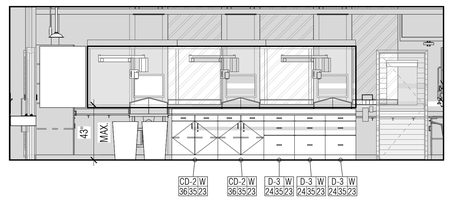

4 07.11.1 **INTERIOR ELEVATION - ANATOMY WEST**
1/4" = 1'-0"

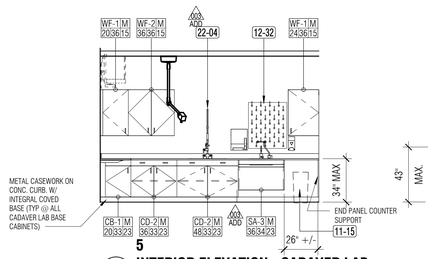

5

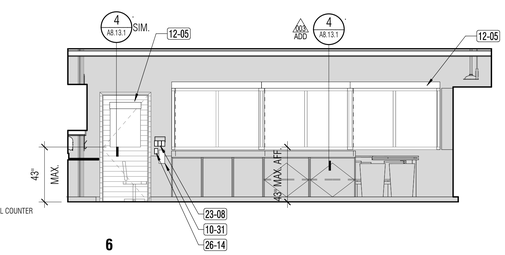

6

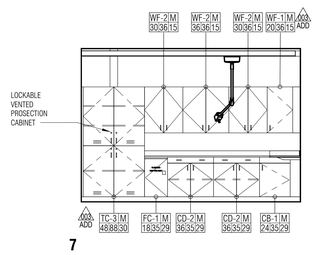

7

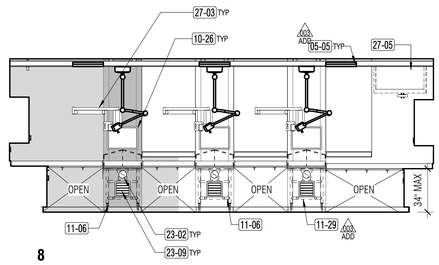

8

5 07.11.1 **INTERIOR ELEVATION - CADAVER LAB**
1/4" = 1'-0"

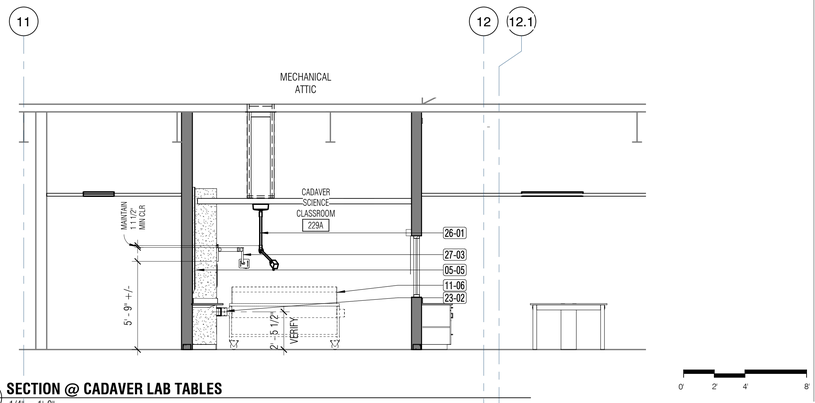

10 07.11.1 **SECTION @ CADAVER LAB TABLES**
1/4" = 1'-0"

GENERAL NOTES

1. CONTRACTOR SHALL VERIFY ALL DIMENSIONS IN FIELD PRIOR TO LAB FURNITURE FABRICATION
2. CONTRACTOR SHALL REVIEW ALL LABORATORY PLANS AND ELEVATIONS AND COORDINATE HEIGHTS OF SLOT WALL EXHAUSTS, EXHAUST VENTS AND UMBILICAL PLUMBING CHASE WITH CEILING PLANS
3. ALL CASEWORK, FUMEHOODS AND OTHER LAB FURNISHINGS WITH EXPOSED TO VIEW BACKS AND SIDES SHALL BE CLOSED AND FINISHED TO MATCH FACE FINISHES.
4. PROVIDE AND INSTALL FILLER PANELS BETWEEN CASEWORK ENDS AND ADJACENT WALLS
5. SEE LABORATORY FURNISHINGS SCHEDULES & DETAILS, SHEETS Q0.02.1 & Q0.03.1, FOR TYPICAL LABORATORY DETAILS APPLICABLE TO THE WORK SHOWN ON THIS SHEET.
6. PROVIDE BACKING AT ALL WALL HUNG LABORATORY, FURNISHINGS, ACCESSORIES AND EQUIPMENT PER 6&7/S9.02.1, UON.

KEY NOTES

Key Value	Keynote Text
05-05	NEW SURFACE MOUNT STAINLESS STEEL SLOT EXHAUST @ 3" ABOVE BACKSPLASH, SEE LAB PLANS & SMD
10-02	NEW MARKERBOARD
10-26	MAGNETIC PORCELAIN MARKERBOARD w/ ALUM FRAME, NO MAPRAIL 18" x 24"
10-31	PROVIDE CLEAR ACRYLIC WALL MOUNTED BROCHURE HOLDER WITH HINGED LID (4½" x 10½" x 2")
11-06	OFCI- STAINLESS STEEL CADAVER TABLE.
11-15	WASTE BIN (OWNER INSTALLED)
11-29	OFCI- ADJUSTABLE HEIGHT STAINLESS STEEL CADAVER TABLE.
11-32	PROJECTOR & MOUNT, SEE RCP & TECH DRAWINGS FOR MORE INFORMATION
11-33	PROJECTOR SCREEN. SEE RCP & TECH DRAWINGS FOR MORE INFORMATION
12-05	NEW MANUAL PRIVACY WINDOW SHADES w/ PRIVACY BLACKOUT SILLS & CHANNELS, FULL LENGTH OF WINDOW
12-32	NEW PEGBOARD DRYING RACK. REMOVE PEGS THAT CONFLICT WITH PLUMBING FIXTURES & PLUG MOUNTING HOLE WITH A TRIMED OR BLANK PEG.
ADD ADD	
22-04	NEW PRE-RINSE SPRAYER WITH FAUCET. PROVIDE WALL BACKING FOR UPRIGHT SUPPORT AS REQUIRED. SPD.
23-02	NEW EXHAUST AIR DUCT w/ QUICK CONNECT ATTACHMENT FOR VENTILATED CADAVER TABLE. CONTRACTOR TO COORDINATE DUCT HEIGHT WITH CADAVER TABLE VENDOR SHOP DRAWINGS. (SMD)
23-08	CADAVER LAB HVAC SYSTEM USER CONTROLS (SMD)
23-09	LOW WALL RETURN (SMD)
26-01	NEW PROCEDURE LIGHTS WITH SUPPORT FRAME TO STRUCTURE ABOVE. (SED)& (SSD)
26-14	LIGHT FIXTURE AS SCHEDULED, SED
27-03	WALL MOUNTED CAMERA SWING ARM w/ CUSTOM CAMERA ADAPTOR. SEE 7& 8/T7.03 & TELECOM PLANS
AS2.06 27-05	OFCI CCTV MONITOR, PROVIDE BACKING FOR MONITOR MOUNTING BRACKET, SEE TELECOM & ELECTRICAL DRAWINGS

CASEWORK TAG

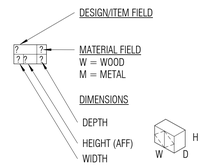

NOTE:
1. CASEWORK HEIGHT IS NOMINAL FROM THE FINISHED FLOOR TO THE TOP OF THE CABINET AND INCLUDES THE CURB WHERE OCCURS.
2. UNITS ARE NOMINAL INCHES. VIF ALL DIMS PRIOR TO FABRICATION.

NOLL & TAM ARCHITECTS
729 Heinz Avenue
Berkeley, CA 94710
tel 510.542.2200
fax 510.542.2201

ARCHITECTS SEAL

LICENSED ARCHITECT
CHRISTOPHER NOLL
No. C15916
REN. 12-31-21
STATE OF CALIFORNIA

APPROVALS

FILE NUMBER: 07-C1

DIVISION OF THE STATE ARCHITECT
APP# 01-117630
ACS_____FLS_____SSS_____
Date:

PROJECT TITLE

CONTRA COSTA CCD
D-4002
DVC SAN RAMON CAMPUS EXPANSION & RENOVATION

1690 Watermill Rd.
San Ramon, CA 94582

ISSUE TITLE
INCREMENT 1 - RENOVATION

ISSUE DATE 4/26/19
NOLL & TAM JOB NUMBER 21630

REVISIONS

	DATE	DESCRIPTION
1	1/30/19	BID ADDENDUM 3
4	4/19/19	CADAVER LAB AV REV

SHEET TITLE
LABORATORY - INTERIOR ELEVATIONS & SECTIONS

SHEET NUMBER
Q7.11.1

10/11/2021 2:39:34 PM C:\Users\phan.dung\Documents\Revit Locals\DVCSR Expansion_Central 2020_phan.dung@nollandtam.com.rvt

* UTILITIES SHOWN ARE FOR A QUANTITY OF 1 PER EACH ITEM – MULTIPLY UTILITY NUMBERS BY QUANTITIES SHOWN IN ORDER TO DETERMINE OVERALL UTILITY LOADS REQUIRED.

BOOKSTORE FOOD SERVICE EQUIPMENT LIST

ITEM NO	QTY	EQUIPMENT CATEGORY	MANUFACTURER	MODEL NUMBER	REMARKS	* SEE NOTE ABOVE REGARDING UTILITY LOAD CALCULATIONS. AMPS	KW	HP	VOLTS	PHASE	CYCLE	DIRECT	PLUG	NEMA	ELEC REMARKS	COLD WATER SIZE (IN)	HOT WATER SIZE (IN)	HOT WATER GPH	DIRECT DRAIN SIZE (IN)	INDIR DRAIN SIZE (IN)	PLUMBING REMARKS	EQUIPMENT WEIGHT/ CAPACITY	REFERENCED PINNING/ BRACING DETAIL
1	1	SERVICE COUNTER	MILLWORK/PLASTIC LAMINATE/SSM	SEE ARCHITECT'S DRAWINGS	W/ DRAWERS	20A DED			120	1	60		X		GFCI CONV. OUTLETS							180 LBS.	NA
2	1	DROP-IN HAND SINK W/ FAUCET	ELKAY	LRADQ2219554/LKAD35/(LKGT1041/LKD2443C-TBD)	ADA COMPLIANT					1	60					0.5	0.5	5	1.5			30 LBS.	NA/INSTALLED AS PART OF #1
3	1	SOAP/TOWEL DISPENSERS	OFCI, SEE ARCHITECT'S DRAWINGS	TBV – WALL MOUNTED	ADA COMPLIANT																	30 LBS.	NA – WALL MOUNTED
4	2	DISPLAY CASE, REFRIGERATED	TRUE FOOD SERVICE	GDM-49RL-HC-LD (OFCI)	REAR LOAD; W/ 6" SEISMIC/FLANGED LEGS	8.5	1.0	0.5	115	1	60		X	5-15P								450 LBS. EACH	A-8/A-22/C-1
5	1	DISPLAY CASE, FROZEN	TRUE FOOD SERVICE	GDM-49F-HC~TSL01 (OFCI)	SWING DOOR; W/ 6" SEISMIC/FLANGED LEGS	12.3	1.4	0.75	115	1	60		X	14-20P								400 LBS.	A-8/A-22/C-1
6	1	DISPLAY CASE, REFRIGERATED	TRUE FOOD SERVICE	GDM-49-HC~TSL01 (OFCI)	SWING DOOR; W/ 6" SEISMIC/FLANGED LEGS	8.5	1.0	0.5	115	1	60		X	5-15P								400 LBS.	A-8/A-22/C-1
7	1	ISLAND SERVICE COUNTER	MILLWORK/PLASTIC LAMINATE/SSM	SEE ARCHITECT'S DRAWINGS	W/ DRAWERS	20A DED			120	1	60		X		GFCI CONV. OUTLETS							360 LBS.	NA
8	1	RAISED PRIVACY SCREEN	MILLWORK/PLASTIC LAMINATE/SSM	SEE ARCHITECT'S DRAWINGS																		30 LBS.	NA/INSTALLED AS PART OF #7
9	1	MICROWAVE OVEN	PANASONIC	NN-SA651S (OFCI)		12.4	1.48		120	1	60		X	5-15P								30 LBS.	NA/PORTABLE
10		NOT USED																				–	–
11		NOT USED																				–	–
12	1	MILKSHAKE BLENDING SYSTEM	F'REAL	B6 SELF-SERVE MINI BLENDING BAR (OFCI)	BLENDER	15.0			120	1	60		X	5-15P		0.5				0.75	TO FS; CW FROM #14	295 LBS.	A-18 SIMILAR
12A		–	–	–	FREEZER	15.0			120	1	60		X	5-15P								–	NA/INSTALLED AS PART OF #12A
13	1	SERVICE COUNTER	MILLWORK/PLASTIC LAMINATE/SSM	SEE ARCHITECT'S DRAWINGS	30" HIGH; 36" DEEP																	90 LBS.	NA
14	1	UNDERCOUNTER FILTER SYSTEM	EVERPURE	EV9100-31												0.75						12 LBS.	NA/INSTALLED AS PART OF #1
15	4	STAINLESS STEEL COVE BASE	CUSTOM FABRICATED	STAINLESS STEEL	6" HIGH – SEE DETAIL #1 ON SHEET FS1.1																	50 LBS.	NA/INSTALLED AS PART OF #4-6

FS = FLOOR SINK F-ST = FROM STUB GFCI = GROUND FAULT CIRCUIT INTERRUPTER AFF = ABOVE FINISHED FLOOR FLR = FLOOR WP = WATER PROOF
SP = SEE PLAN PED = PEDESTAL SSM = SOLID SURFACE MATERIAL TBV = TO BE VERIFIED S/S = STAINLESS STEEL FA = FROM ABOVE
ALL DIMENSIONS FOR ROUGH-INS ARE FROM FINISHED FLOOR TO CENTERLINE OF R-I. ALL CONVENIENCE OUTLETS TO BE MINIMUM 20A DEDICATED CIRCUITS.
OFCI= OWNER FURNISHED/CONTRACTOR INSTALLED

GENERAL NOTES AND CONDITIONS

1. RAS DESIGN GROUP LLC – DOES NOT REPRESENT ITSELF AS AN ARCHITECT, A CONTRACTOR OR AN ENGINEER. THESE DRAWINGS ARE PROVIDED FOR THE CONVENIENCE OF THE ARCHITECT, CONTRACTOR AND/OR SUBCONTRACTOR TO SHOW THE GENERAL PLACEMENT OF EQUIPMENT, FIXTURES, FURNISHINGS AND/OR MATERIALS, AND WERE MADE FROM AVAILABLE INFORMATION AT THE TIME THEY WERE DRAWN.
2. ALL PLUMBING, ELECTRICAL, ROUGH-IN WORK, FINAL CONNECTIONS TO ALL FOOD SERVICE EQUIPMENT AND FIXTURES INCLUDING TAPS, VALVES, GREASE TRAPS, WATER SOFTENERS, MISC. FITTINGS, SWITCHES, WIRING, CONDUIT OR FLEX, MAGNETIC STARTERS, DISCONNECTS, ELECTRICAL PANELS, THERMAL OVERLOAD PROTECTORS, CORDS AND PLUGS, ETC., MUST BE PROVIDED BY THE GENERAL CONTRACTOR OR LICENSED TRADE CONTRACTOR.
3. WORK BY ANY TRADE INDICATED ON THESE PLANS DOES NOT NECESSARILY REFLECT COMPLIANCE WITH EACH TRADE'S RESPECTIVE CODES, ORDINANCES AND REGULATIONS AND THEREFORE DOES NOT RELIEVE THEM OF THEIR RESPONSIBILITY TO ASSURE SUCH.
4. ALL DIMENSIONS AND CONDITIONS MUST BE VERIFIED AT THE JOB SITE. DETAILS SHOWN ARE TYPICAL.
5. ALL DIMENSIONS WHEN SHOWN IN PLAN ARE TO THE FACE OF FINISHED SURFACES UNLESS OTHERWISE NOTED. INSTALLER MUST VERIFY ALL FIELD DIMENSIONS AND RELAY ANY DISCREPANCIES AND PROBLEMS TO THE DESIGNER AND PM FOR RESOLUTION IN A TIMELY MANNER.
6. CONTRACTORS, SUBCONTRACTORS, SHEET METAL FABRICATORS AND TRADES SHALL PROVIDE AND SUBMIT THEIR OWN NECESSARY ROUGH-IN PLANS, ELEVATIONS AND DRAWINGS AS REQUIRED.
7. GENERAL CONTRACTOR SHALL PROVIDE ALL CEILING, WALL AND FLOOR PENETRATIONS, ALL SLEEVES FOR PLUMBING, ELECTRICAL, REFRIGERATION, CO2 LINES AND VENTILATION AS REQUIRED. ALL PENETRATIONS AND REMOTE LOCATION SITES MUST BE VERIFIED AND APPROVED BY PROJECT ENGINEERS.
8. PLUMBING CONTRACTOR SHALL SELECT, PROVIDE AND LOCATE CORRECTLY-SIZED GREASE TRAPS, FLOOR SINKS, DRAINS AS REQUIRED AND COORDINATE THE INSTALLATION OF THESE TO COMPLY WITH THE REQUIREMENTS AS SPECIFIED BY THE FOOD SERVICE EQUIPMENT SUPPLIER.
9. ANY ERRORS, OMISSIONS OR CONFLICT FOUND IN THE VARIOUS PARTS OF THE CONTRACT DOCUMENTS SHALL BE BROUGHT TO THE ATTENTION OF THE ARCHITECT AND/OR PROJECT MANAGER BEFORE PROCEEDING WITH THE WORK.
10. FOOD SERVICE EQUIPMENT SUPPLIER AGREES TO CARRY OUT COMMISSIONING ON ALL EQUIPMENT, MATERIALS, AND SYSTEMS IN ACCORDANCE WITH MANUFACTURERS' RECOMMENDATIONS AND UPON COMPLETION OF THE INSTALLATION AT THE TIME DESIGNATED BY EMPLOYER OR PROJECT MANAGER.
11. FOOD SERVICE EQUIPMENT SUPPLIER WARRANTS THAT ALL STANDARDS, FABRICATIONS AND DESIGNS MEET OR EXCEED LOCAL ENVIRONMENTAL HEALTH, FIRE AND SAFETY CODES AND REGULATIONS. ANY ISSUE, DESIGN OR STANDARD OF MANUFACTURE FOUND TO NOT MEET THESE CODES AND REGULATIONS SHALL BE BROUGHT TO THE ATTENTION OF THE ARCHITECT AND/OR PROJECT MANAGER BEFORE PROCEEDING WITH THE WORK.

MEP CONTRACTORS AND ENGINEERS: PLEASE NOTE THAT THESE DRAWINGS ARE FOR PLANNING LOCATIONS AND COSTS FOR ROUGH-IN CONNECTIONS TO EQUIPMENT AS NOTED IN THESE PLANS. THE FINAL SELECTION OF EQUIPMENT MAY CHANGE AND EFFECT THE SIZE, LOCATION AND COST OF THE ASSOCIATED WORK. ALL SERVICES TO THE EQUIPMENT SHOWN SHOULD BE RE-VERIFIED WITH THE FINAL "FOR CONSTRUCTION" DRAWINGS PRODUCED BY THE INSTALLER.

SUMMARY OF WORK

1. THE WORK TO BE PERFORMED BY THE CONTRACTOR(S) UNDER THIS SET OF CONTRACT DOCUMENTS IS THE DEMOLITION, ALTERATION AND NEW CONSTRUCTION AS IS NECESSARY TO PROVIDE FOR THE INSTALLATION OF THE FOOD SERVICE EQUIPMENT SHOWN HEREIN.
2. IT IS THE INTENT OF THE CONTRACT NOTES AND DOCUMENTATION THAT ALL MATERIALS, EQUIPMENT, AND ALL SYSTEMS BE INSTALLED PROPERLY AND COMPLETELY FOR THEIR INTENDED FUNCTION IN THE COMPLETED WORK.
3. THE WORK INCLUDES, BUT IS NOT LIMITED TO, ALL LABOR, MATERIALS, EQUIPMENT, TOOLS, MACHINERY, CONSTRUCTION, FACILITIES AND TEMPORARY CONTROLS, TRANSPORTATION AND OTHER FACILITIES AND SERVICES NECESSARY TO PRODUCE THE CONSTRUCTION REQUIRED BY THE CONTRACT DOCUMENTS.
4. ALL SPECIFICATIONS BOOKS, ADDENDA, INQUIRIES AND REQUESTS ATTACHED TO OR DISTRIBUTED WITH THESE DRAWINGS CONSTITUTE THE COMPLETE SCOPE OF WORK TO BE FULFILLED IN THESE PLANS.

NOTE: DEMAND VENTILATION IS NOT PART OF THIS SCOPE OF WORK; WORK TO BE SPECIFIED AND SUPPLIED IN HVAC AND SYSTEM CONTROLS SCOPE OF WORK.

REMOVED FROM SCOPE CCDA-8

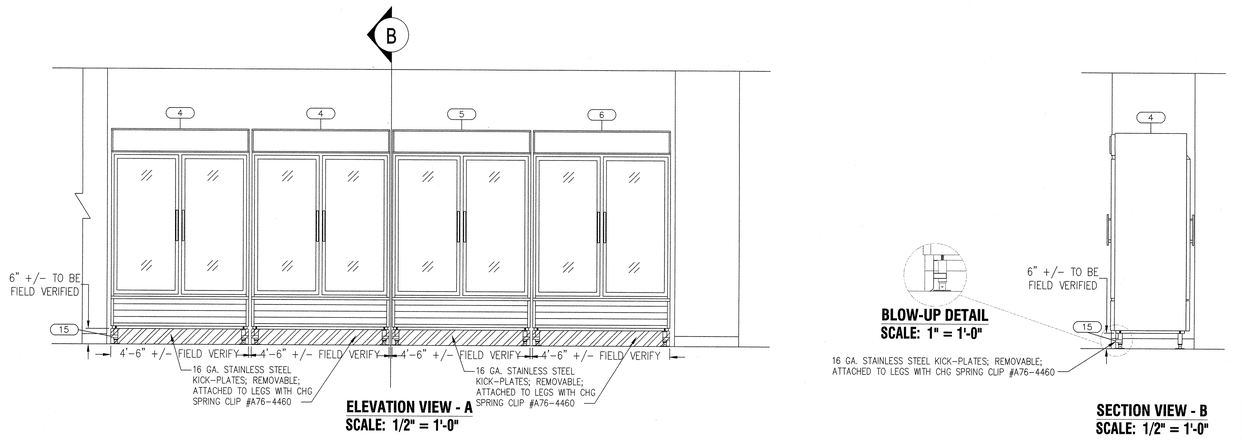

ELEVATION VIEW - A
SCALE: 1/2" = 1'-0"

BLOW-UP DETAIL
SCALE: 1" = 1'-0"

SECTION VIEW - B
SCALE: 1/2" = 1'-0"

DETAIL #1: ITEM #15 STAINLESS STEEL COVE BASE DETAIL - ELEVATION AND SECTION VIEW

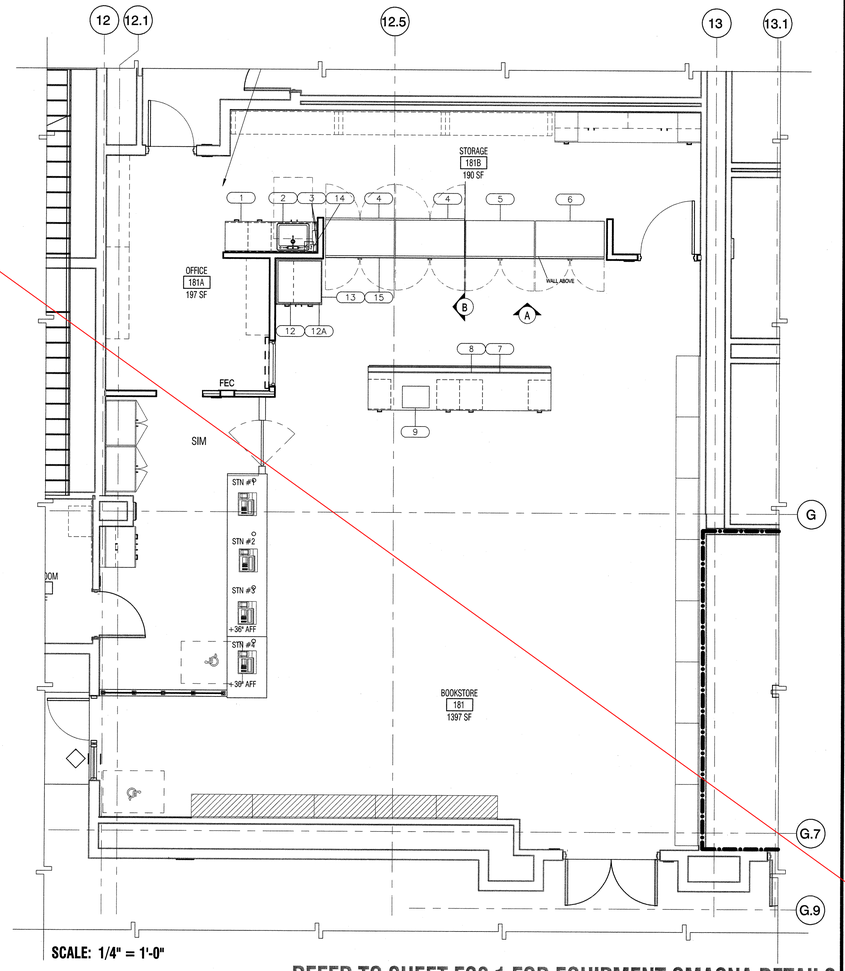

SCALE: 1/4" = 1'-0"

REFER TO SHEET FS2.1 FOR EQUIPMENT SMACNA DETAILS

NOLL & TAM ARCHITECTS
729 Heinz Avenue
Berkeley, CA 94710
tel 510.542.2200
fax 510.542.2201

ARCHITECTS SEAL

LICENSED ARCHITECT
CHRISTOPHER NOLL
No. C15916
REN. 12-31-19
STATE OF CALIFORNIA

APPROVALS
FILE NUMBER: 07-C1
DIVISION OF THE STATE ARCHITECT
APP# 01-117630
ACS RW DSA SSS NC
Date: OCT 25 2018

RAS Design Group
RAS Design Group LLC
Foodservice and Laundry Consulting
630 Escobar Street
Martinez, CA 94553
Phone: 925/372-0322
Email: ron@raadas.com
Website: raadas.com

PROJECT TITLE
CONTRA COSTA CCD
D-4002
DVC SAN RAMON CAMPUS EXPANSION & RENOVATION
1690 Watermill Rd.
San Ramon, CA 94582

ISSUE TITLE
INCREMENT 1 - RENOVATION

ISSUE DATE 10/25/18
NOLL & TAM JOB NUMBER 21630
REVISIONS
| | DATE | DESCRIPTION |

SHEET TITLE
BOOKSTORE FOOD SERVICE ITEMIZED PLAN & EQUIPMENT SCHEDULE WITH UTILITY DATA

SHEET NUMBER
FS1.1

* UTILITIES SHOWN ARE FOR A QUANTITY OF 1 PER EACH ITEM – MULTIPLY UTILITY NUMBERS BY QUANTITIES SHOWN IN ORDER TO DETERMINE OVERALL UTILITY LOADS REQUIRED.

BOOKSTORE FOOD SERVICE EQUIPMENT LIST

ITEM NO	QTY	EQUIPMENT CATEGORY	MANUFACTURER	MODEL NUMBER	REMARKS	* SEE NOTE ABOVE REGARDING UTILITY LOAD CALCULATIONS. AMPS	KW	HP	VOLTS	PHASE	CYCLE	DIRECT PLUG	NEMA	ELEC REMARKS	COLD WATER SIZE (IN)	HOT WATER SIZE (IN)	HOT WATER GPH	DIRECT DRAIN SIZE (IN)	INDIR DRAIN SIZE (IN)	PLUMBING REMARKS	EQUIPMENT WEIGHT/ CAPACITY	REFERENCED PINNING/ BRACING DETAIL
1	1	SERVICE COUNTER	MILLWORK/PLASTIC LAMINATE/SSM	SEE ARCHITECT'S DRAWINGS	W/ DRAWERS	20A DED			120	1	60	X		GFCI CONV. OUTLETS							180 LBS.	NA
2	1	DROP-IN HAND SINK W/ FAUCET	ELKAY	LRADQ2219554/LKAD35/(LKGT1041/LKD2443C-TBD)	ADA COMPLIANT										0.5	0.5	5	1.5			30 LBS.	NA/INSTALLED AS PART OF #1
3	1	SOAP/TOWEL DISPENSERS	OFCI, SEE ARCHITECT'S DRAWINGS	TBV – WALL MOUNTED	ADA COMPLIANT																30 LBS.	NA – WALL MOUNTED
4	2	DISPLAY CASE, REFRIGERATED	TRUE FOOD SERVICE	GDM-49RL-HC-LD (OFCI)	REAR LOAD; W/ 6" SEISMIC/FLANGED LEGS	8.5	1.0	0.5	115	1	60	X	5-15P								450 LBS. EACH	A-8/A-22/C-1
5	1	DISPLAY CASE, FROZEN	TRUE FOOD SERVICE	GDM-49F-HC~TSL01 (OFCI)	SWING DOOR; W/ 6" SEISMIC/FLANGED LEGS	12.3	1.4	0.75	115	1	60	X	14-20P								400 LBS.	A-8/A-22/C-1
6	1	DISPLAY CASE, REFRIGERATED	TRUE FOOD SERVICE	GDM-49-HC~TSL01 (OFCI)	SWING DOOR; W/ 6" SEISMIC/FLANGED LEGS	8.5	1.0	0.5	115	1	60	X	5-15P								400 LBS.	A-8/A-22/C-1
7	1	ISLAND SERVICE COUNTER	MILLWORK/PLASTIC LAMINATE/SSM	SEE ARCHITECT'S DRAWINGS	W/ DRAWERS	20A DED			120	1	60	X		GFCI CONV. OUTLETS							360 LBS.	NA
8	1	RAISED PRIVACY SCREEN	MILLWORK/PLASTIC LAMINATE/SSM	SEE ARCHITECT'S DRAWINGS																	30 LBS.	NA/INSTALLED AS PART OF #7
9	1	MICROWAVE OVEN	PANASONIC	NN-SA651S (OFCI)		12.4	1.48		120	1	60	X	5-15P								30 LBS.	NA/PORTABLE
10		NOT USED																			–	–
11		NOT USED																			–	–
12	1	MILKSHAKE BLENDING SYSTEM	F'REAL	B6 SELF-SERVE MINI BLENDING BAR (OFCI)	BLENDER	15.0			120	1	60	X	5-15P		0.5				0.75	TO FS; CW FROM #14	295 LBS.	A-18 SIMILAR
12A		–	–	–	FREEZER	15.0			120	1	60	X	5-15P								–	NA/INSTALLED AS PART OF #12A
13	1	SERVICE COUNTER	MILLWORK/PLASTIC LAMINATE/SSM	SEE ARCHITECT'S DRAWINGS	30" HIGH; 36" DEEP																90 LBS.	NA
14	1	UNDERCOUNTER FILTER SYSTEM	EVERPURE	EV9100-31											0.75						12 LBS.	NA/INSTALLED AS PART OF #1
15	4	STAINLESS STEEL COVE BASE	CUSTOM FABRICATED	STAINLESS STEEL	6" HIGH – SEE DETAIL #1 ON SHEET FS1.1																50 LBS.	NA/INSTALLED AS PART OF #4-6

FS = FLOOR SINK F-ST = FROM STUB GFCI = GROUND FAULT CIRCUIT INTERRUPTER AFF = ABOVE FINISHED FLOOR FLR = FLOOR WP = WATER PROOF
SP = SEE PLAN PED = PEDESTAL SSM = SOLID SURFACE MATERIAL TBV = TO BE VERIFIED S/S = STAINLESS STEEL FA = FROM ABOVE
ALL DIMENSIONS FOR ROUGH-INS ARE FROM FINISHED FLOOR TO CENTERLINE OF R-I. ALL CONVENIENCE OUTLETS TO BE MINIMUM 20A DEDICATED CIRCUITS.
OFCI= OWNER FURNISHED/CONTRACTOR INSTALLED

REMOVED FROM SCOPE CCDA-8

FOOD SERVICE ELECTRICAL NOTES

1. ALL OUTLETS AND CONNECTIONS SHOWN RELATE TO FOOD SERVICE (FS) EQUIPMENT ONLY.
2. THIS ELECTRICAL ROUGH-IN PLAN IS INTENDED TO SHOW OUTLET LOCATIONS, CONNECTION POSITIONS AND LOADS. ANY DIMENSIONS SHOWN ARE FROM FINISHED WALL SURFACES.
3. THE FINAL CONNECTIONS TO THE FS EQUIPMENT AT THE JUNCTION-BOX OR CIRCUIT PANEL WILL BE BY THE ELECTRICAL CONTRACTOR. ELECTRICAL CONTRACTOR TO INCLUDE ALL MATERIALS.
4. ELECTRICAL DIVISION TO FURNISH AND INSTALL THE FOLLOWING:
   A. ALL JUNCTION-BOXES, ELECTRICAL OUTLETS, COVER PLATES, SWITCHES, ETC., NOT BUILT INTO FIXTURES OR EQUIPMENT. ALL OUTLETS, JUNCTION-BOXES, COVER PLATES, ETC. AS INDICATED ON SCHEDULES MUST BE VAPOR PROOF. ALL OUTLETS ABOVE TABLE/COUNTER BACK SPLASHES TO BE MOUNTED HORIZONTALLY.
   B. ALL CORDS AND PLUGS, AS NOTED ON SCHEDULE, SHALL BE N.E.M.A. RATED AND U.L. APPROVED.
   C. DISCONNECTS OR OTHER DEVICES AS REQUIRED BY CODES.
5. ELECTRICAL CONTRACTOR TO PROVIDE CONDUIT, WIRING J-BOXES, OUTLETS, ETC., AND INSTALL. ELECTRICAL COMPONENTS AND INTERWIRE, BETWEEN ALL FS EQUIPMENT (WHERE REQUIRED) INCLUDING BUT NOT LIMITED TO, THE FOLLOWING:
   A. FROM JUNCTION BOXES TO OUTLETS MOUNTED ON/IN CUSTOM FABRICATED EQUIPMENT ITEMS.

ELECTRICAL ABBREVIATIONS AND SYMBOLS

DUPLEX RECEPTACLE MOUNTED ON EQUIPMENT AT HEIGHT INDICATED, POWER FROM STUB	DRS	●
STUB-UP TO JUNCTION BOX	JBS	J●
DUPLEX RECEPTACLE	DR	⫿
FLUSH FLOOR DUPLEX RECEPTACLE	FDR	F
FLUSH FLOOR SINGLE RECEPTACLE	FSR	⫿

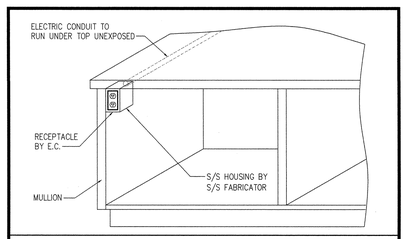

2. UNDER COUNTER RECEPTACLE SCALE: N.T.S.

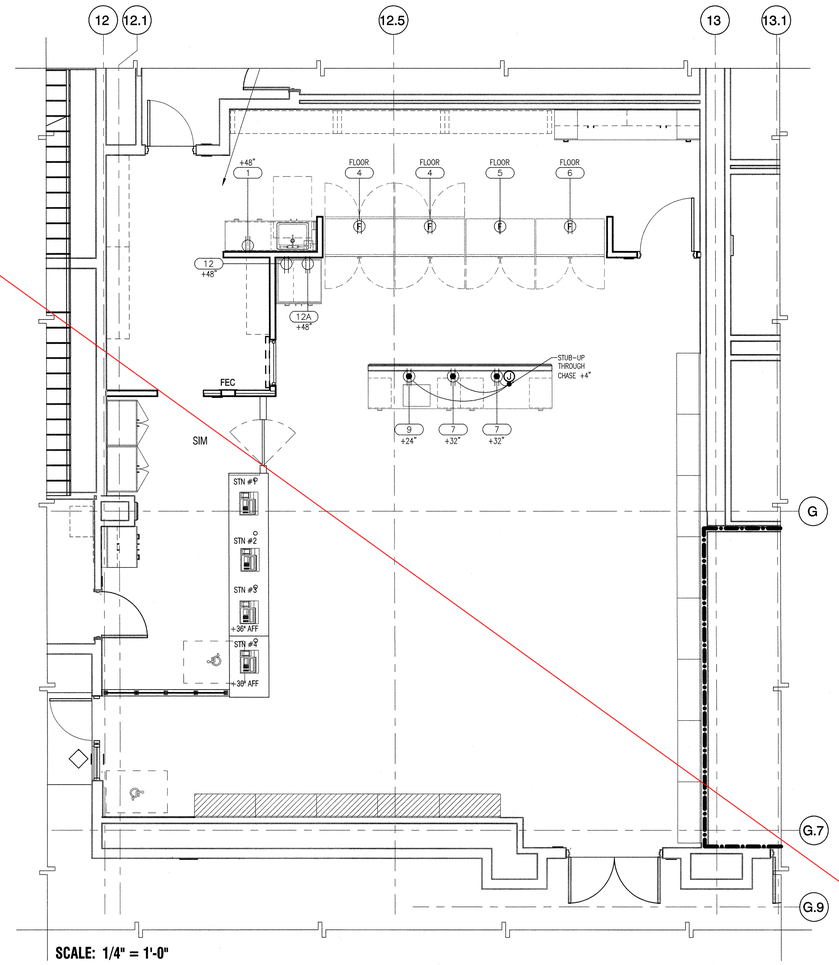

SCALE: 1/4" = 1'-0"

NOLL & TAM ARCHITECTS
729 Heinz Avenue
Berkeley, CA 94710
tel 510.542.2200
fax 510.542.2201

ARCHITECTS SEAL

LICENSED ARCHITECT · CHRISTOPHER NOLL · No. C15916 · REN. 12-31-19 · STATE OF CALIFORNIA

APPROVALS
FILE NUMBER: 07-C1
DIVISION OF THE STATE ARCHITECT
APP# 01-117630
ACS Date: OCT 25 2018

RAS Design Group
RAS Design Group LLC
Foodservice and Laundry Consulting
630 Escobar Street
Martinez, CA 94553
Phone: 925/372-0222
Email: ron@rasadas.com
Website: rasadas.com

PROJECT TITLE
CONTRA COSTA CCD
D-4002
DVC SAN RAMON CAMPUS EXPANSION & RENOVATION
1690 Watermill Rd.
San Ramon, CA 94582

ISSUE TITLE
INCREMENT 1 - RENOVATION

ISSUE DATE	10/25/18
NOLL & TAM JOB NUMBER	21630

REVISIONS

	DATE	DESCRIPTION

SHEET TITLE
BOOKSTORE FOOD SERVICE EQUIPMENT ELECTRICAL ROUGH-IN PLAN

SHEET NUMBER
FS1.2

* UTILITIES SHOWN ARE FOR A QUANTITY OF 1 PER EACH ITEM – MULTIPLY UTILITY NUMBERS BY QUANTITIES SHOWN IN ORDER TO DETERMINE OVERALL UTILITY LOADS REQUIRED.

BOOKSTORE FOOD SERVICE EQUIPMENT LIST

ITEM NO	QTY	EQUIPMENT CATEGORY	MANUFACTURER	MODEL NUMBER	REMARKS	* SEE NOTE ABOVE REGARDING UTILITY LOAD CALCULATIONS. AMPS	KW	HP	VOLTS	PHASE	CYCLE	DIRECT	PLUG	NEMA	ELEC REMARKS	COLD WATER SIZE (IN)	HOT WATER SIZE (IN)	HOT WATER GPH	DIRECT DRAIN SIZE (IN)	INDIR DRAIN SIZE (IN)	PLUMBING REMARKS	EQUIPMENT WEIGHT/ CAPACITY	REFERENCED PINNING/ BRACING DETAIL
1	1	SERVICE COUNTER	MILLWORK/PLASTIC LAMINATE/SSM	SEE ARCHITECT'S DRAWINGS	W/ DRAWERS	20A DED			120	1	60		X		GFCI CONV. OUTLETS							180 LBS.	NA
2	1	DROP-IN HAND SINK W/ FAUCET	ELKAY	LRADQ2219554/LKAD35/(LKGT1041/LKD2443C-TBD)	ADA COMPLIANT											0.5	0.5	5	1.5			30 LBS.	NA/INSTALLED AS PART OF #1
3	1	SOAP/TOWEL DISPENSERS	OFCI, SEE ARCHITECT'S DRAWINGS	TBV – WALL MOUNTED	ADA COMPLIANT																	30 LBS.	NA – WALL MOUNTED
4	2	DISPLAY CASE, REFRIGERATED	TRUE FOOD SERVICE	GDM-49RL-HC-LD (OFCI)	REAR LOAD; W/ 6" SEISMIC/FLANGED LEGS	8.5	1.0	0.5	115	1	60		X	5-15P								450 LBS. EACH	A-8/A-22/C-1
5	1	DISPLAY CASE, FROZEN	TRUE FOOD SERVICE	GDM-49F-HC~TSL01 (OFCI)	SWING DOOR; W/ 6" SEISMIC/FLANGED LEGS	12.3	1.4	0.75	115	1	60		X	14-20P								400 LBS.	A-8/A-22/C-1
6	1	DISPLAY CASE, REFRIGERATED	TRUE FOOD SERVICE	GDM-49-HC~TSL01 (OFCI)	SWING DOOR; W/ 6" SEISMIC/FLANGED LEGS	8.5	1.0	0.5	115	1	60		X	5-15P								400 LBS.	A-8/A-22/C-1
7	1	ISLAND SERVICE COUNTER	MILLWORK/PLASTIC LAMINATE/SSM	SEE ARCHITECT'S DRAWINGS	W/ DRAWERS	20A DED			120	1	60		X		GFCI CONV. OUTLETS							360 LBS.	NA
8	1	RAISED PRIVACY SCREEN	MILLWORK/PLASTIC LAMINATE/SSM	SEE ARCHITECT'S DRAWINGS																		30 LBS.	NA/INSTALLED AS PART OF #7
9	1	MICROWAVE OVEN	PANASONIC	NN-SA651S (OFCI)		12.4	1.48		120	1	60		X	5-15P								30 LBS.	NA/PORTABLE
10		NOT USED																				–	–
11		NOT USED																				–	–
12	1	MILKSHAKE BLENDING SYSTEM	F'REAL	B6 SELF-SERVE MINI BLENDING BAR (OFCI)	BLENDER	15.0			120	1	60		X	5-15P		0.5				0.75	TO FS; CW FROM #14	295 LBS.	A-18 SIMILAR
12A		–	–	–	FREEZER	15.0			120	1	60		X	5-15P								–	NA/INSTALLED AS PART OF #12A
13	1	SERVICE COUNTER	MILLWORK/PLASTIC LAMINATE/SSM	SEE ARCHITECT'S DRAWINGS	30" HIGH; 36" DEEP																	90 LBS.	NA
14	1	UNDERCOUNTER FILTER SYSTEM	EVERPURE	EV9100-31												0.75						12 LBS.	NA/INSTALLED AS PART OF #1
15	4	STAINLESS STEEL COVE BASE	CUSTOM FABRICATED	STAINLESS STEEL	6" HIGH – SEE DETAIL #1 ON SHEET FS1.1																	50 LBS.	NA/INSTALLED AS PART OF #4-6

FS = FLOOR SINK F-ST = FROM STUB GFCI = GROUND FAULT CIRCUIT INTERRUPTER AFF = ABOVE FINISHED FLOOR FLR = FLOOR WP = WATER PROOF
SP = SEE PLAN PED = PEDESTAL SSM = SOLID SURFACE MATERIAL TBV = TO BE VERIFIED S/S = STAINLESS STEEL FA = FROM ABOVE
ALL DIMENSIONS FOR ROUGH-INS ARE FROM FINISHED FLOOR TO CENTERLINE OF P-I. ALL CONVENIENCE OUTLETS TO BE MINIMUM 20A DEDICATED CIRCUITS.
OFCI= OWNER FURNISHED/CONTRACTOR INSTALLED

REMOVED FROM SCOPE CCDA-8

FOOD SERVICE MECHANICAL/PLUMBING NOTES

1. ALL CONNECTIONS SHOWN RELATE TO FOOD SERVICE EQUIPMENT ONLY. SEE ENGINEERING PLANS FOR ADDITIONAL INFORMATION.
2. PLUMBING ROUGH-IN PLAN IS INTENDED TO SHOW LOCATIONS, HEIGHTS, CONNECTION SIZES, POSITIONS AND LOAD REQUIREMENTS. ANY DIMENSIONS SHOWN ARE FROM FINISHED SURFACES.
3. FINAL CONNECTIONS AND INTERCONNECTIONS TO/BETWEEN ALL EQUIPMENT TO ALL EQUIPMENT TO BE BY MECHANICAL DIVISION INCLUDING REQUIRED MATERIAL, SUCH AS STOPS, VALVES, FILTERS, TRAPS, CHECK VALVES, MIXING VALVES, PIPING, TUBING, ETC.
4. MECHANICAL DIVISION TO FURNISH AND INSTALL THE FOLLOWING:
   A. ALL WATER AND WASTE SERVICE TO POINT OF ROUGH-IN AS SHOWN ON PLAN.
   B. PROVIDE HOT WATER AS FOLLOWS: 110 DEGREE MINIMUM TO HAND SINKS.
   C. ALL FLOOR SINKS, COMPLETE WITH THE INDICATED TOP GRATES, AND REMOVABLE SEDIMENT BUCKETS, SET FLUSH WITH FINISHED FLOOR, UNLESS OTHERWISE NOTED OR REQUIRED BY CODES.
   D. ALL WASTE LINES AS NOTED. MINIMUM DIAMETER OF LINE SHALL BE AS INDICATED ON PLAN, REGARDLESS OF CONNECTION SIZE, AND SHALL BE DOWNWARD WITH ADEQUATE CLEAN-OUT PROVISIONS. MAINTAIN DRAINS AS HIGH AS POSSIBLE ABOVE FLOOR.
   E. VACUUM BREAKERS AS REQUIRED.
5. PLUMBING CONTRACTOR TO TURN BACK DRAIN CONNECTIONS; THEN, DOWN TO MAXIMIZE STORAGE – TYPICAL FOR ALL DRAINS.

MECHANICAL ABBREV. AND SYMBOLS

HOT WATER	HW	●
COLD WATER	CW	○
WASTE	W	⊗
INDIRECT WASTE	IW	⊗
6X6 FLOOR SINK- 2" PIPE	FS	▣

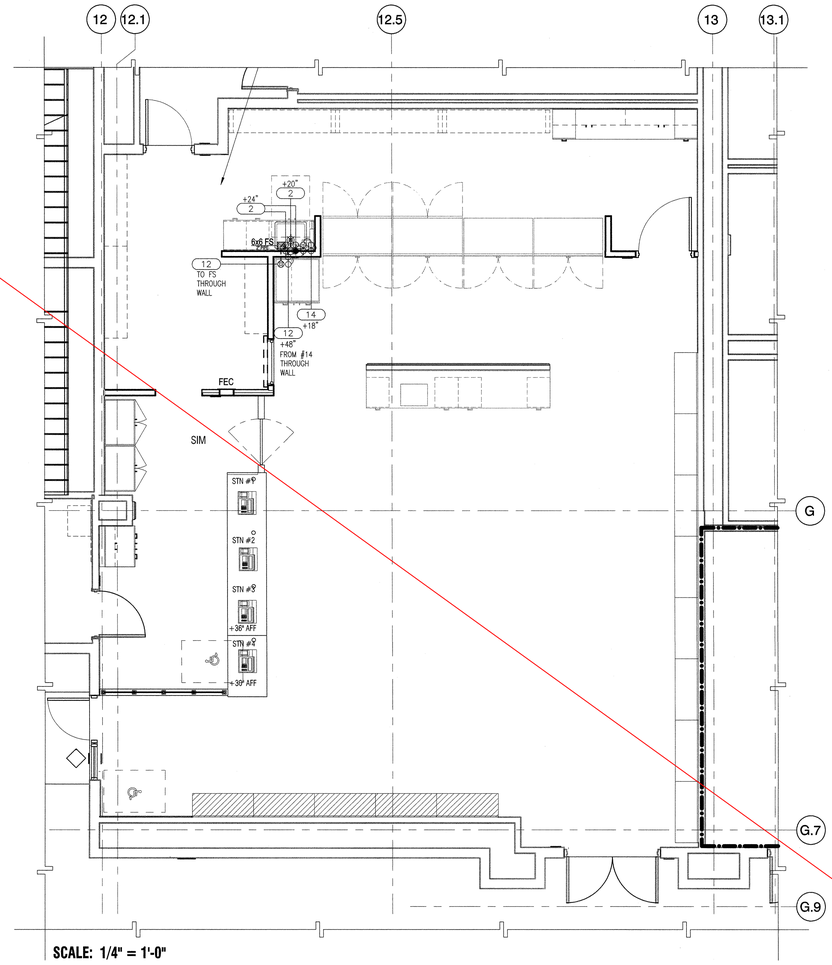

SCALE: 1/4" = 1'-0"

NOLL & TAM ARCHITECTS
729 Heinz Avenue
Berkeley, CA 94710
tel 510.542.2200
fax 510.542.2201

ARCHITECTS SEAL

LICENSED ARCHITECT
CHRISTOPHER NOLL
No. C15916
REN. 12-31-19
STATE OF CALIFORNIA

APPROVALS
FILE NUMBER: 07-C1
DIVISION OF THE STATE ARCHITECT
APP# 01-117630
ACS KW PLS SSS
Date: OCT 25 2019

RAS Design Group
RAS Design Group LLC
Foodservice and Laundry Consulting
630 Escobar Street
Martinez, CA 94553
Phone: 925/372-0222
Email: ron@rasadas.com
Website: rasadas.com

PROJECT TITLE
CONTRA COSTA CCD
D-4002
DVC SAN RAMON CAMPUS EXPANSION & RENOVATION
1690 Watermill Rd.
San Ramon, CA 94582

ISSUE TITLE
INCREMENT 1 - RENOVATION

ISSUE DATE	10/25/19
NOLL & TAM JOB NUMBER	21630

REVISIONS

	DATE	DESCRIPTION

SHEET TITLE
BOOKSTORE FOOD SERVICE EQUIPMENT PLUMBING ROUGH-IN PLAN

SHEET NUMBER
FS1.3

BOOKSTORE FOOD SERVICE EQUIPMENT LIST – SMACNA

ITEM NO	QTY	EQUIPMENT CATEGORY	MANUFACTURER	MODEL NUMBER	REMARKS	EQUIPMENT WEIGHT/ CAPACITY	REFERENCED PINNING/ BRACING DETAIL
1	1	SERVICE COUNTER	MILLWORK/PLASTIC LAMINATE/SSM	SEE ARCHITECT'S DRAWINGS	W/ DRAWERS	180 LBS.	NA
2	1	DROP-IN HAND SINK W/ FAUCET	ELKAY	LRADQ2219554/LKAD35/(LKGT1041/LKD2443C-TBD)	ADA COMPLIANT	30 LBS.	NA/INSTALLED AS PART OF #1
3	1	SOAP/TOWEL DISPENSERS	OFCI, SEE ARCHITECT'S DRAWINGS	TBV – WALL MOUNTED	ADA COMPLIANT	30 LBS.	NA – WALL MOUNTED
4	2	DISPLAY CASE, REFRIGERATED	TRUE FOOD SERVICE	GDM-49RL-HC-LD	REAR LOAD; W/ 6" SEISMIC/FLANGED LEGS	450 LBS. EACH	A-8/A-22/C-1
5	1	DISPLAY CASE, FROZEN	TRUE FOOD SERVICE	GDM-49F-HC~TSL01	SWING DOOR; W/ 6" SEISMIC/FLANGED LEGS	400 LBS.	A-8/A-22/C-1
6	1	DISPLAY CASE, REFRIGERATED	TRUE FOOD SERVICE	GDM-49-HC~TSL01	SWING DOOR; W/ 6" SEISMIC/FLANGED LEGS	400 LBS.	A-8/A-22/C-1
7	1	ISLAND SERVICE COUNTER	MILLWORK/PLASTIC LAMINATE/SSM	SEE ARCHITECT'S DRAWINGS	W/ DRAWERS	360 LBS.	NA
8	1	RAISED PRIVACY SCREEN	MILLWORK/PLASTIC LAMINATE/SSM	SEE ARCHITECT'S DRAWINGS		30 LBS.	NA/INSTALLED AS PART OF #7
9	1	MICROWAVE OVEN	PANASONIC	NN-SA651S		30 LBS.	NA/PORTABLE
10		NOT USED				–	–
11		NOT USED				–	–
12	1	MILKSHAKE BLENDING SYSTEM	F'REAL	B6 SELF-SERVE MINI BLENDING BAR	BLENDER	295 LBS.	A-18 SIMILAR
12A		–	–	–	FREEZER	–	NA/INSTALLED AS PART OF #12A
13	1	SERVICE COUNTER	MILLWORK/PLASTIC LAMINATE/SSM	SEE ARCHITECT'S DRAWINGS	30" HIGH; 36" DEEP	90 LBS.	NA
14	1	UNDERCOUNTER FILTER SYSTEM	EVERPURE	EV9100-31		12 LBS.	NA/INSTALLED AS PART OF #1
15	LOT	STAINLESS STEEL COVE BASE	CUSTOM FABRICATED	STAINLESS STEEL	6" HIGH – SEE DETAIL #1 ON SHEET FS1.1	50 LBS.	NA/INSTALLED AS PART OF #4-6

OFCI= OWNER FURNISHED/CONTRACTOR INSTALLED

REMOVED FROM SCOPE CCDA-8

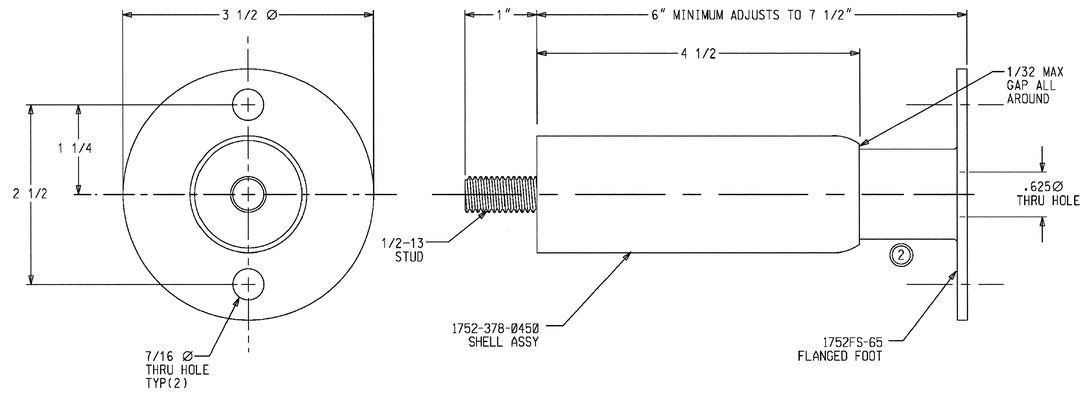

MATERIAL: LEG SHELL – 1 5/8" O.D. X 16 GAGE 300 SERIES STAINLESS STEEL
FOOT SHELL – 1 1/4" X 16 GAGE 300 SERIES STAINLESS STEEL
FLANGE PLATE – 11 GAGE 300 SERIES STAINLESS STEEL

NOTE: 1. EXTERIOR FINISH TO BE No.4 SATIN (180-220 GRIT)
2. FOOT TO TURN FREELY WITHIN SHELL ASSEMBLY THROUGHOUT ENTIRE ADJUSTMENT RANGE
3. OVERALL LENGTH TOLERANCE ± 1/16

FINISHED GOODS No.: 61752FS60L5S

			TOLERANCE UNLESS OTHERWISE SPECIFIED: FRACTIONAL ±1/64 2 PLACE DECIMAL ±.010 3 PLACE DECIMALS ±.005 ANGULAR ±1°	
			SUPERSEDES DWG.	KASON
			SCALE FULL	KASON INDUSTRIES, INC. SHENANDOAH, GA
			MAT'L.	TITLE: LEG 1 5/8 X 6 SS 1/2 L FS SPCL
04/29/05	2	REMOVED HOLE IN FOOT SHELL	JR	DRAWN BY
02/07/03	1	RELEASED FOR PRODUCTION		APRV. MK DATE 02/07/03
		REVISIONS	BY	CATALOG NO. 1752FS60L5S DRAWING NO. YF-39657

DISPLAY CASE FLANGED DETAIL
SMACNA FOODSERVICE EQUIPMENT NOT TO SCALE C-1

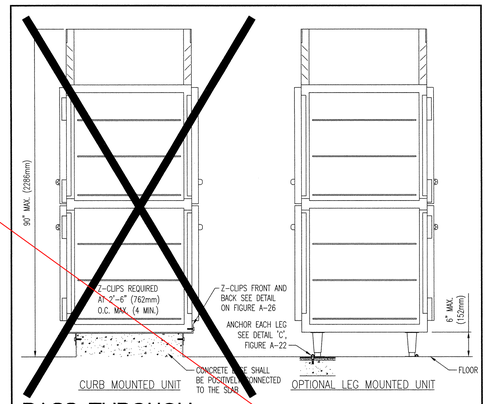

PASS-THROUGH MOUNTED APPLIANCES
SMACNA FOODSERVICE EQUIPMENT NOT TO SCALE A-8

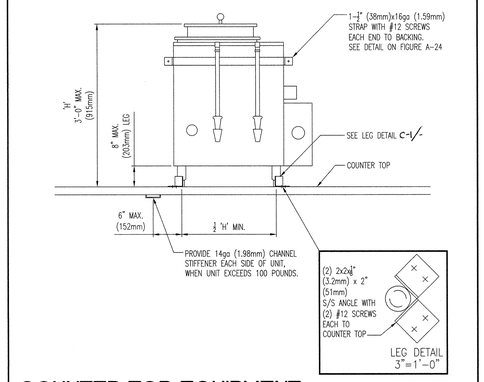

COUNTER TOP EQUIPMENT
SMACNA FOODSERVICE EQUIPMENT NOT TO SCALE A-18

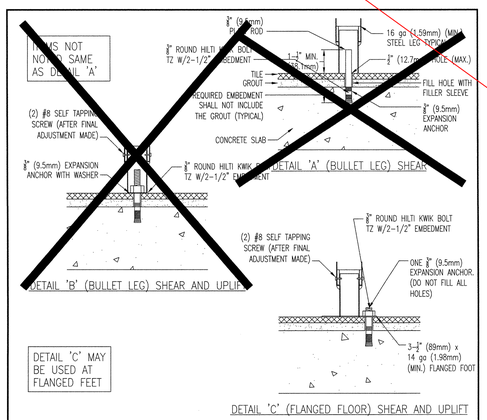

FOOT DETAILS
SMACNA FOODSERVICE EQUIPMENT NOT TO SCALE A-22

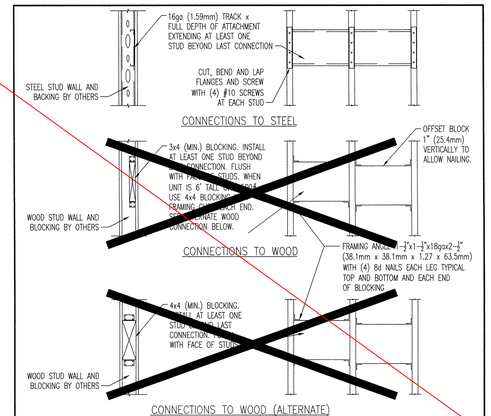

WALL SUPPORT BACKING
SMACNA FOODSERVICE EQUIPMENT NOT TO SCALE A-24

REFER TO SHEET FS1.1 FOR ITEMIZED EQUIPMENT SCHEDULE WITH UTILITY DATA

NOLL & TAM ARCHITECTS
729 Heinz Avenue
Berkeley, CA 94710
tel 510.542.2200
fax 510.542.2201

ARCHITECTS SEAL

LICENSED ARCHITECT
CHRISTOPHER NOLL
No. C15916
RENEWAL 12-31-19
STATE OF CALIFORNIA

APPROVALS
FILE NUMBER: 07-C1
DIVISION OF THE STATE ARCHITECT
APP# 01-117630
ACS: [illegible] FLS: [illegible] SSS: [illegible]
Date: OCT 25 2018

RAS Design Group
RAS Design Group LLC
Foodservice and Laundry Consulting
650 Escobar Street
Martinez, CA 94553
Phone: 855-273-0552
Email: ron@rasadee.com
Website: rasadee.com

PROJECT TITLE
CONTRA COSTA CCD
D-4002
DVC SAN RAMON CAMPUS EXPANSION & RENOVATION
1690 Watermill Rd.
San Ramon, CA 94582

ISSUE TITLE
INCREMENT 1 - RENOVATION

ISSUE DATE 10/25/18
NOLL & TAM JOB NUMBER 21630

REVISIONS

	DATE	DESCRIPTION

SHEET TITLE
BOOKSTORE FOOD SERVICE EQUIPMENT SMACNA DETAILS

SHEET NUMBER
FS2.1

SHEET LIST	
SHEET NUMBER	SHEET NAME
S0.00.1	STRUCTURAL COVER SHEET
S0.01.1	STRUCTURAL GENERAL NOTES
S0.03.1	SYMBOLS & ABBREVIATIONS
S2.30A.1	KEY PLAN
S2.30B.1	KEY PLAN
S2.33.1	FIRST FLOOR - EAST - CLASSROOM DRAWING STUDIO
S2.34.1	FIRST FLOOR - EAST - BOOKSTORE
S2.37.1	SECOND FLOOR - EAST - A&P LAB
S2.47.1	ATTIC FLOOR - EAST - MECHANICAL
S5.01.1	TYPICAL CONCRETE REINFORCEMENT DETAILS
S5.02.1	TYPICAL CONCRETE SLAB DETAILS
S5.03.1	CONCRETE DETAILS
S7.01.1	STEEL DETAILS
S9.01.1	METAL STUD WALL DETAILS
S9.02.1	METAL STUD WALL DETAILS
S9.03.1	EXTERIOR METAL STUD WALL DETAILS

NOLL & TAM ARCHITECTS

729 Heinz Avenue
Berkeley, CA 94710
tel 510.542.2200
fax 510.542.2201

SEAL

REGISTERED PROFESSIONAL ENGINEER
RANJEET JUNEJA
72676
CIVIL
STATE OF CALIFORNIA

APPROVALS

FILE NUMBER: 07-C1

DIVISION OF THE STATE ARCHITECT

APP# 01-117630

ACS_____FLS_____SSS_____
Date:

WALTER P MOORE

PROJECT TITLE

CONTRA COSTA CCD

D-4002

DVC SAN RAMON CAMPUS EXPANSION & RENOVATION

1690 Watermill Rd.
San Ramon, CA 94582

ISSUE TITLE

INCREMENT 1 - RENOVATION - FINAL

ISSUE DATE	10/07/2021
NOLL & TAM JOB NUMBER	21630

REVISIONS

	DATE	DESCRIPTION

SHEET TITLE

STRUCTURAL COVER SHEET

SHEET NUMBER

S0.00.1

10/7/2021 12:37:17 PM BIM 360://313-16009-00 DVC San Ramon Campus Expansion (INCR1)/S_DVCSR_EXPANSION_INCR1_R18.rvt

GENERAL STRUCTURAL NOTES

PART I - DESIGN CRITERIA

A. GENERAL BUILDING CODE

1. THE CONSTRUCTION DOCUMENTS ARE BASED ON THE REQUIREMENTS OF THE CALIFORNIA BUILDING CODE 2016.
2. THE STRUCTURAL DRAWINGS AND SPECIFICATIONS ARE INTENDED TO PROVIDE FOR STRUCTURAL DESIGN OF THE BUILDING IN ACCORDANCE WITH THE 2016 CALIFORNIA CODE OF REGULATIONS, TITLE 24, PART 2. IF CONDITIONS NOT COVERED BY THE CONTRACT DOCUMENTS ARISE DURING CONSTRUCTION SUCH THAT THE COMPLETED WORK WILL NOT BE IN COMPLIANCE WITH THESE REGULATIONS, A CHANGE ORDER DETAILING SUCH WORK REQUIRED TO BE IN COMPLIANCE SHALL BE SUBMITTED TO DSA AND APPROVED PRIOR TO THE CONTRACTOR PROCEEDING WITH SAID WORK.
3. EXISTING BUILDING: RISK CATEGORY (CBC TABLE 1604A.5): III
4. THE SCOPE OF STRUCTURAL WORK IN INCREMENT 1 IS PRIMARILY TO SUPPORT LIMITED ARCHITECTURAL AND MEP REMODELS. THE WORK DOES NOT AFFECT THE BUILDING SEISMIC FORCE RESISTING SYSTEM. THE WORK INCLUDES A FREE-STANDING CANOPY AT THE BOOKSTORE ENTRY.

B. NOT USED

C. LIVE LOADS

1. PARTITIONS: IN AREAS WITH PARTITIONS SUBJECT TO CHANGE, AN ALLOWANCE OF 15 PSF HAS BEEN MADE FOR PARTITIONS AS A UNIFORMLY DISTRIBUTED LIVE LOAD WHERE THE LIVE LOAD AS STATED BELOW IS 80 PSF OR LESS.
2. DESIGN LIVE LOADS ARE BASED ON THE MORE RESTRICTIVE OF THE UNIFORM LOAD LISTED BELOW OR THE CONCENTRATED LOAD LISTED ACTING OVER AN AREA 2.5 FEET SQUARE.
   a. CORRIDORS, FIRST FLOOR: 100 PSF | 1,000 LBS
   b. CORRIDORS, OTHER FLOORS: 80 PSF | 1,000 LBS
   c. DINING ROOMS AND RESTAURANTS: 100 PSF
   d. MECHANICAL ROOMS: 100 PSF | EQUIP. WT.
   e. RESTROOMS: SAME AS OCCUPANCY SERVED
   f. ROOFS: 20 PSF | 300 LBS; REDUCIBLE PER CODE
   g. CLASSROOM FLOORS: 50 PSF | 1,000 LBS
   h. STAIRS AND EXITS: 100 PSF | 300 LBS
   i. STORAGE, LIGHT: 125 PSF
4. REDUCTION OF LIVE LOADS:
   a. LIVE LOADS HAVE BEEN REDUCED USING THE STANDARD PROCEDURE FROM THE BUILDING CODE.
   b. FOR LIVE LOADS EXCEEDING 100 POUNDS PER SQUARE FOOT, NO REDUCTION HAS BEEN MADE, EXCEPT THAT THE DESIGN LIVE LOAD ON MEMBERS SUPPORTING TWO OR MORE FLOORS HAS BEEN REDUCED A MAXIMUM OF 20 PERCENT BUT THE LIVE LOAD IS NOT TO BE LESS THAN THAT CALCULATED BY THE FORMULA ABOVE.

D. WIND LOADS

1. WIND PRESSURES ARE BASED ON THE PROVISIONS OF THE AMERICAN SOCIETY OF CIVIL ENGINEERS, MINIMUM DESIGN LOADS FOR BUILDINGS AND OTHER STRUCTURES, ASCE 7-10, THE ALL HEIGHT METHOD OF CBC 1609A.6 AND THE FOLLOWING CRITERIA:
   a. ULTIMATE DESIGN WIND SPEED (VULT): 115 MPH (3 SECOND GUST)
   b. NOMINAL DESIGN WIND SPEED (VASD): 85 MPH (3-SECOND GUST)
   c. WIND EXPOSURE CATEGORY: [C]
   d. WIND IMPORTANCE FACTOR: I_w = 1.0

E. SNOW LOADS – NOT APPLICABLE

F. SEISMIC DESIGN CRITERIA

1. THE RENOVATION COMPONENTS OF THE EXISTING BUILDING HAVE BEEN DESIGNED IN ACCORDANCE WITH AFOREMENTIONED BUILDING CODE WITH THE FOLLOWING CRITERIA:
   a. 0.2 SEC. SPECTRAL ACCELERATION (SS): 1.974G
   b. 1 SEC. SPECTRAL ACCELERATION (S1): 0.670G
   c. SITE CLASS: D
   d. SITE COEFFICIENT, SHORT PERIOD (FA): 1.0
   e. SITE COEFFICIENT, 1 SEC. PERIOD (FV): 1.5
   f. 0.2 SEC SPECTRAL RESPONSE COEFF. (SDS): 1.316G
   g. 1 SEC SPECTRAL RESPONSE COEFF. (SD1): 0.067G
   h. SEISMIC DESIGN CATEGORY: D
   i. SEISMIC RESPONSE COEFFICIENT, CS: 0.202
   j. BASIC SEISMIC-FORCE RESISTING SYSTEM: STEEL SCBF
   k. SEISMIC IMPORTANCE FACTOR, I_e: 1.25
2. THE NEW ENTRY CANOPY IS DESIGNED IN ACCORDANCE WITH ASCE 7-10 SECTION 13.3.
   a. ap = 2.5, Rp = 3
   b. Ip = 1.0
3. SEISMIC DEMANDS ON NONSTRUCTURAL COMPONENTS, STRUCTURAL COMPONENTS ENGINEERED AS PART OF DEFERRED SUBMITTALS, AND CONNECTIONS OF THOSE COMPONENTS TO THE PRIMARY STRUCTURE SHALL BE DESIGNED IN ACCORDANCE WITH THE AFOREMENTIONED BUILDING CODE, THE GENERAL SEISMIC CRITERIA LISTED ABOVE, AND THE REQUIREMENTS OF ASCE 7-10, CHAPTERS 12.11, 13.3, AND 13.4 AS APPROPRIATE.

G. FUTURE EXPANSION

1. NO PROVISIONS FOR ANY FUTURE EXPANSIONS HAVE BEEN MADE IN THE STRUCTURAL DESIGN.

PART II - FOUNDATION

A. GEOTECHNICAL REPORT

1. FOUNDATION DESIGN IS BASED ON THE GEOTECHNICAL INVESTIGATION REPORT TITLED "GEOTECHNICAL INVESTIGATION FOR PROPOSED NEW TUTORIAL LIBRARY BUILDING, DIABLO VALLEY COLLEGE - SAN RAMON CAMPUS", PREPARED BY RMA GROUP, AND DATED AUGUST 23, 2017.
2. THE GEOTECHNICAL REPORT IS AVAILABLE TO THE GENERAL CONTRACTOR UPON REQUEST TO THE OWNER. THE ARCHITECT AND ENGINEER WILL NOT BE RESPONSIBLE FOR THE ACCURACY OR APPLICABILITY OF SUCH DATA THEREIN.

B. SHALLOW FOUNDATION

1. THE SIZES AND BOTTOM ELEVATIONS OF SPREAD FOOTINGS ARE ESTABLISHED BASED ON THE REQUIREMENTS OF THE PROJECT GEOTECHNICAL REPORT. AS EXCAVATIONS PROGRESS, CONDITIONS MAY DEVELOP WHICH REQUIRE CHANGES IN THE FOOTING ELEVATIONS AND/OR SIZES. SUCH CHANGES SHALL BE MADE ONLY AS DIRECTED BY THE GEOTECHNICAL ENGINEER WITH THE APPROVAL OF DSA.
   a. DESIGN (NET) PRESSURES
      1) DEAD AND LIVE LOAD: 2,000 PSF; MAY BE INCREASED 10% FOR EACH ADDITIONAL FOOT OF WIDTH OR DEPTH TO A MAXIMUM OF 3,000 PSF
      2) DEAD, LIVE AND SEISMIC (WIND) LOAD: 1/3 INCREASE OVER DEAD + LIVE ALLOWABLE PRESSURE
   b. FOOTINGS SHALL EXTEND A MINIMUM OF 2'-0" INCHES BELOW LOWEST ADJACENT GRADE AND BEAR ON ENGINEERED FILL.
2. GRADE BEAMS:
   a. GRADE BEAM SIDES. EXCEPT AS NOTED ON THE DRAWINGS, NON-EXPOSED GRADE BEAM SIDES MAY BE EARTH FORMED. REFER TO SPECIFICATIONS FOR COMPLETE REQUIREMENTS.
   b. BAR SUPPORTS FOR GRADE BEAM CAGES. GRADE BEAM BOTTOM STEEL SHALL BE CHAIRED AT 5'-0" MAXIMUM CENTERS USING BEAM BOLSTERS PROVIDING 3" BOTTOM COVER TO REINFORCING STEEL. BEAM BOLSTERS USED SHALL BE DESIGNED AND MANUFACTURED FOR SUPPORT ON SOIL.

C. RETAINING WALLS

1. DESIGN CRITERIA
   a. ACTIVE SOIL PRESSURE: 47 PSF PER FOOT OF DEPTH (LEVEL SURFACE SLOPE).
   b. AT-REST SOIL PRESSURE: 66 PSF PER FOOT OF DEPTH (LEVEL SURFACE SLOPE).
   c. SEISMIC LATERAL EARTH PRESSURE: 19 PCF, APPLIED AS AN INVERTED TRIANGLE WITH RESULTANT APPLIED AT UPPER 1/3 OF WALL HEIGHT
   d. THE DESIGN PRESSURES SPECIFIED ABOVE ARE BASED ON DRAINED BACKFILL WITH NO BUILDUP OF WATER PRESSURE BEHIND THE WALLS.

D. LATERAL RESISTANCE

1. PASSIVE PRESSURE = 247 PCF
2. COEFFICIENT OF FRICTION = 0.28

E. DRILLED PIERS - CANOPY

1. ALLOWANCE BEARING, DEAD PLUS LIVE: 1,500 PSF
2. ALLOWABLE LATERAL BEARING PRESSURE: 200 PSF PER FT OF DEPTH

PART III - REINFORCED CONCRETE

A. CLASSES OF CONCRETE

1. ALL CONCRETE SHALL CONFORM TO THE REQUIREMENTS OF THE "CLASSES OF CONCRETE MATRIX" ON SHEET S5.01 UNLESS NOTED OTHERWISE ON THE DRAWINGS.

B. HORIZONTAL CONSTRUCTION JOINTS IN CONCRETE POURS

1. THERE SHALL BE NO HORIZONTAL CONSTRUCTION JOINTS IN ANY CONCRETE POURS UNLESS SHOWN ON THE DRAWINGS. THE ARCHITECT/ENGINEER SHALL APPROVE ALL DEVIATIONS OR ADDITIONAL JOINTS IN WRITING.

C. REINFORCING STEEL

1. ALL REINFORCING STEEL SHALL BE ASTM A 615 GRADE 60 UNLESS NOTED OTHERWISE ON THE DRAWINGS OR IN THESE NOTES.
2. REINFORCING STEEL: PROVIDE REINFORCING STEEL CONFORMING TO ASTM A 706 FOR ALL REINFORCING STEEL REQUIRED TO BE WELDED AND WHERE NOTED ON THE DRAWINGS.
3. DEFORMED BAR ANCHORS: AWS D1.1 TYPE C (TABLE 7.1) STUDS MANUFACTURED IN CONFORMANCE WITH SPECIFICATION ASTM A 1064 WITH A MINIMUM YIELD STRENGTH 70,000 PSI. REINFORCING BARS SHALL NOT BE SUBSTITUTED FOR DEFORMED BAR ANCHORS.
4. HEADED STUD ANCHORS FOR EMBEDDED PLATES: AWS D1.1 TYPE A STUDS MANUFACTURED IN CONFORMANCE WITH SPECIFICATION ASTM A 108 WITH A MINIMUM TENSILE STRENGTH OF 61,000 PSI.
5. SMOOTH WELDED WIRE REINFORCEMENT: ASTM A 185, YIELD STRENGTH 65,000 PSI.
6. TERMINATION OF REINFORCEMENT (UNLESS NOTED OTHERWISE)
   a. TERMINATE ALL BARS IN LAPS, 90 DEGREE BENDS, OR WITH DOWELS INTO EXISTING CONCRETE.
   b. FOOTINGS AND GRADE BEAMS
      1) BEND TOP BARS DOWN WITH STANDARD 90 DEGREE BENDS
      2) BEND BOTTOM BARS UP WITH STANDARD 90 DEGREE BENDS
         a) PROVIDE DOWELS INTO FOOTINGS OF SAME SIZE AND SPACING AS SLAB REINFORCEMENT

D. PLACEMENT OF WELDED WIRE REINFORCEMENT

1. WHEREVER WELDED WIRE REINFORCEMENT IS SPECIFIED AS REINFORCEMENT, IT SHALL BE CONTINUOUS ACROSS THE ENTIRE CONCRETE SURFACE AND PROPERLY LAPPED PER ACI 318, 12.18 AND 12.19.

E. REINFORCEMENT IN TOPPING SLABS

1. PROVIDE MINIMUM REINFORCEMENT AS NOTED BELOW IN ALL TOPPING SLABS UNLESS SPECIFIED OTHERWISE ON THE DRAWINGS.
   a. WELDED SMOOTH WIRE REINFORCEMENT 6X6-W2.9XW2.9.

F. REINFORCEMENT IN HOUSEKEEPING PADS

1. PROVIDE MINIMUM REINFORCEMENT AS NOTED BELOW IN ALL HOUSEKEEPING PADS SUPPORTING MECHANICAL EQUIPMENT UNLESS SPECIFIED OTHERWISE ON THE DRAWINGS.
   a. WELDED SMOOTH WIRE REINFORCEMENT 6X6-W2.9XW2.9.

G. REINFORCING STEEL COVERAGE

1. REINFORCING STEEL COVERAGE SHOULD CONFORM TO THE REQUIREMENTS SPECIFIED IN DETAILS LABELED "TYPICAL CLEAR CONCRETE COVER" ON SHEETS S5.01 UNLESS NOTED OTHERWISE ON THE DRAWINGS. COVER SPECIFIED SHALL BE CONSIDERED MINIMUMS THAT MAY REQUIRE INCREASING WHERE REINFORCING STEEL INTERSECTS FOR DIFFERENT MEMBER TYPES. COVER IN STRUCTURAL MEMBERS NOT SPECIFIED IN THE DETAILS SHALL CONFORM TO THE REQUIREMENTS OF ACI 318 UNLESS SPECIFIED OTHERWISE ON THE DRAWINGS. THE REINFORCING STEEL DETAILER SHALL ADJUST REINFORCING STEEL CAGE SIZES AT INTERSECTING STRUCTURAL MEMBERS AS REQUIRED TO ALLOW CLEARANCE FOR INTERSECTING REINFORCING BAR LAYERS WITH MINIMUM SPECIFIED COVER.

PART IV - NOT USED

PART V - STRUCTURAL STEEL

A. MATERIAL

1. HOT ROLLED STRUCTURAL MEMBERS: ALL HOT ROLLED STEEL PLATES, SHAPES, SHEET PILING, AND BARS SHALL BE NEW STEEL CONFORMING TO ASTM SPECIFICATION A 6.
2. ASTM SPECIFICATION AND GRADE: CLEARLY MARK THE GRADE OF STEEL ON EACH PIECE, WITH A DISTINGUISHING MARK VISIBLE FROM FLOOR SURFACES, FOR THE PURPOSE OF FIELD INSPECTION OF PROPER GRADE OF STEEL. UNLESS NOTED OTHERWISE ON THE DRAWINGS, STRUCTURAL STEEL SHALL BE AS FOLLOWS:
   a. WF- AND WT-SHAPES: ASTM A 992
   b. M- AND S-SHAPES: ASTM A 36
   c. C-SHAPES: ASTM A 36
   d. L-SHAPES: ASTM A 36
   e. ROUND HSS: ASTM A 500, GRADE B
   f. RECTANGULAR HSS: ASTM A 500, GRADE B
   g. STEEL PIPES: ASTM A 53, TYPE E OR S, GRADE B.
   h. BASE PLATES: ASTM A 572, GRADE 50
   i. ALL OTHER PLATES: ASTM A 36

B. STRUCTURAL BOLTS AND THREADED FASTENERS

1. HIGH STRENGTH BOLTS: ALL BOLTS IN STRUCTURAL CONNECTIONS SHALL CONFORM TO ASTM A 325 TYPE 1, UNLESS INDICATED OTHERWISE ON THE DRAWINGS.
2. BOLTS IN STEEL-TO-WOOD CONNECTIONS SHALL CONFORM TO ASTM A307 MACHINE BOLTS.
3. THREADED ROUND STOCK: THREADED RODS SHALL CONFORM TO ASTM A 36.

C. WELDING

1. UNLESS NOTED OTHERWISE, ELECTRODES FOR WELDING SHALL CONFORM TO E70XX (SMAW), F7XX-EXXX (SAW), ER70S-X (GMAW), OR E7XT-X (FCAW).

D. ANCHOR RODS

1. UNLESS INDICATED OTHERWISE ON THE DRAWINGS, ANCHOR RODS SHALL CONFORM TO ASTM F 1554 GRADE 55 (WITH SUPPLEMENTARY REQUIREMENT S1) AND THE SIZE SHALL BE 3/4" DIAMETER AND SHALL EMBED INTO THE CONCRETE FOUNDATION A DISTANCE OF 1'-6" WITH A HEAVY HEX NUT AT THE EMBEDDED END. STRIKE BOLT THREADS AT THE EMBEDDED END AT TWO PLACES BELOW THE NUT.

E. GROUT

1. GROUT BELOW STRUCTURAL STEEL BASE PLATES SHALL BE NON-METALLIC, NON-SHRINK GROUT WITH A MINIMUM STRENGTH OF 8,000 PSI.

PART VI - NOT USED

PART VII - COLD-FORMED METAL FRAMING

A. MATERIALS

1. STUD AND TRACK PROFILES SHALL BE STANDARD SECTIONS USED BY MEMBERS OF THE STEEL STUD MANUFACTURERS ASSOCIATION (SSMA). SSMA MEMBER DESIGNATIONS AS SHOWN ON THE FOLLOWING EXAMPLE:

   600 S 162-43 REPRESENTS A 6.00" DEEP, STUD SECTION, 1.625" WIDE FLANGE, 0.043" (43 MILS) MINIMUM STEEL THICKNESS.
   NOTES:
   S = STUD SECTION
   T = TRACK SECTION
   U = CHANNEL SECTION
   F = FURRING CHANNEL
2. UNLESS NOTED OTHERWISE ON THE DRAWINGS, MEMBERS SHALL HAVE THE FOLLOWING YIELD STRENGTHS:
   a. STUDS: 33, 43 MIL THICKNESS FY = 33 KSI
   b. STUDS: 54, 68, 97 MIL THICKNESS FY = 50 KSI
   c. TRACKS: 33, 43, 54, 68, 97 MIL FY = 33 KSI
   d. U-CHANNELS, FURRING CHANNELS: FY = 33 KSI
3. ALL COLD-FORMED STEEL FRAMING MATERIALS SHALL HAVE A MINIMUM G60 GALVANIZED COATING.

B. CONNECTIONS

1. SCREWS: UNLESS NOTED OTHERWISE SCREWS SHALL BE AS FOLLOWS:
   a. SHEET STEEL TO SHEET STEEL: #10-16, 5/8 INCH LONG SELF DRILLING SCREWS.
   b. SHEET STEEL TO STRUCTURAL STEEL: #12-24, 1-1/2 INCH LONG SELF DRILLING SCREWS WITH NO 5 TIP STYLE.
2. POWDER ACTUATED FASTENERS: UNLESS NOTED OTHERWISE, PAF SHALL BE AS FOLLOWS:
   a. HILTI XC-##, 0.138" DIA. x 1.25" EMBEDMENT, ICC-ESR 1752 DATED 9/2017
3. WELDING:
   a. WELDING PROCEDURES FOR SHEET STEEL TO BE IN ACCORDANCE WITH AWS D1.3. WELDERS SHALL BE CERTIFIED FOR SHEET STEEL IN ALL POSITIONS REQUIRED PER AWS D1.3
   b. SUGGESTED WELD METAL AND PROCESS FOR SHOP WELDING ARE: 60KSI WELD METAL STRENGTH (MINIMUM) - MIG.
   c. SUGGESTED METHODS FOR FIELD WELDING: 1/8 INCH E60XX (MINIMUM) ELECTRODE - SMAW.
   d. MINIMUM WELD THROAT THICKNESS (T) MUST MATCH OR EXCEED THE BASE STEEL THICKNESS OF THE THINNEST CONNECTED STEEL SHEET UNLESS NOTED OTHERWISE.
   e. AFTER WELDING ALL FLUX SHALL BE REMOVED, AND A ZINC-RICH PAINT, WITH A DRY FILM CONTAINING 94% ZINC DUST BY WEIGHT, SHALL BE APPLIED TO THE WELD AREA TO RESTORE CORROSION RESISTANCE.

PART VIII - STRUCTURAL OBSERVATION

A. THE STRUCTURAL ENGINEER SHALL PROVIDE STRUCTURAL OBSERVATION IN ACCORDANCE WITH THE REQUIREMENTS OF CBC 1704A.6.

B. AT THE CONCLUSION OF THE WORK INCLUDED IN THE PERMIT, THE STRUCTURAL OBSERVER SHALL SUBMIT TO THE DIVISION OF THE STATE ARCHITECT (DSA) A WRITTEN STATEMENT THAT THE SITE VISITS HAVE BEEN MADE AND SHALL IDENTIFY ANY REPORTED DEFICIENCIES THAT, TO THE BEST OF THE STRUCTURAL OBSERVER'S KNOWLEDGE, HAVE NOT BEEN RESOLVED.

C. STRUCTURAL OBSERVATION DOES NOT INCLUDE OR WAIVE THE RESPONSIBILITY FOR THE INSPECTION REQUIRED BY THE BUILDING CODE.

PART IX - SPECIAL INSPECTIONS

A. THE DISTRICT'S TESTING LABORATORY SHALL PROVIDE SPECIAL INSPECTIONS SERVICES IN ACCORDANCE WITH CBC 1704A BY A SPECIAL INSPECTOR CERTIFIED BY THE DIVISION OF THE STATE ARCHITECT (DSA). FOR SPECIFIC REQUIREMENTS, REFER TO THE SPECIFICATIONS AND DSA FORM 103, LIST OF REQUIRED STRUCTURAL TESTS AND INSPECTIONS.

B. SPECIAL INSPECTION REPORTS AND A FINAL REPORT IN ACCORDANCE WITH THE CALIFORNIA BUILDING CODE SHALL BE SUBMITTED TO DISTRICT'S REPRESENTATIVE, INSPECTOR OF RECORD, CONTRACTOR AND DSA FIELD ENGINEER.

1. STEEL CONSTRUCTION:
   a. SHOP AND FIELD WELDING
   b. HIGH-STRENGTH BOLTING
   c. INSPECTION OF STRUCTURAL STEEL, BOLTING, WELDING MATERIALS
2. CONCRETE CONSTRUCTION:
   a. POST-INSTALLED CONCRETE ANCHORS
   b. CONCRETE PLACEMENT
   c. REINFORCING STEEL PLACEMENT
   d. EPOXY ANCHORS
5. SOILS:
   a. DRILLED PIERS

C. STATEMENT OF SPECIAL INSPECTIONS

1. SPECIAL INSPECTION IS REQUIRED FOR THE ITEMS LISTED ABOVE. REFER TO DSA FORM 103 AND SPECIFICATION FOR TYPE AND EXTENT OF EACH SPECIAL INSPECTION AND EACH TEST. THE SPECIFICATION ALSO INDICATES WHETHER CONTINUOUS OR PERIODIC INSPECTION IS REQUIRED FOR THE ITEMS LISTED ABOVE ADDITIONAL INFORMATION.

PART X - SUBMITTALS

A. SUBMITTAL LIST AND SCHEDULE

1. THE GENERAL CONTRACTOR SHALL PREPARE A DETAILED LIST AND SCHEDULE OF ALL SUBMITTAL ITEMS TO BE SENT TO THE STRUCTURAL ENGINEER PRIOR TO THE START OF CONSTRUCTION. THIS LIST SHALL BE UPDATED AND REVISED AND KEPT CURRENT AS THE JOB PROGRESSES. THE SUBMITTAL LIST SHALL BE ORGANIZED AS SHOWN BELOW:
   a. SHOP DRAWINGS
   b. DESIGN CALCULATIONS
   c. PRODUCT DATA, CERTIFICATES, REPORTS, AND OTHER LITERATURE

B. SUBMITTALS TO BE PROVIDED TO STRUCTURAL ENGINEER

1. REFER TO THE STRUCTURAL SPECIFICATIONS SECTIONS FOR REQUIRED STRUCTURAL SUBMITTALS.
2. DEFERRED SUBMITTALS:
   a. THE FOLLOWING ITEMS ARE CONSIDERED DEFERRED SUBMITTALS BY THE REGISTERED DESIGN PROFESSIONAL IN RESPONSIBLE CHARGE:
      1) EXTERIOR WINDOW WALL SYSTEM (S&S, REC)
   b. (S&S) - ITEMS MARKED THUS SHALL HAVE THE SHOP DRAWINGS AND DELEGATED DESIGN SUBMITTALS (INCLUDING CALCULATIONS) SEALED PER THE PROJECT SPECIFICATIONS BY AN ENGINEER REGISTERED IN THE STATE WHERE THE PROJECT IS LOCATED.
   c. (REC) - ITEMS MARKED THUS SHALL BE SUBMITTED TO ENGINEER FOR RECORD ONLY AND WILL NOT HAVE THE ENGINEER'S SHOP DRAWING STAMP AFFIXED.
   d. DOCUMENTS FOR DEFERRED SUBMITTAL ITEMS SHALL BE SUBMITTED TO THE REGISTERED DESIGN PROFESSIONAL AND THE DIVISION OF THE STATE ARCHITECT (DSA).
   e. DEFERRED SUBMITTAL ITEMS SHALL NOT BE INSTALLED UNTIL THE DEFERRED SUBMITTAL DOCUMENTS HAVE BEEN APPROVED BY DSA.
3. SUBMITTAL REQUIREMENTS:
   a. ALL SHOP DRAWINGS MUST BE REVIEWED AND ELECTRONICALLY STAMPED BY THE GENERAL CONTRACTOR PRIOR TO SUBMITTAL.
   b. CONTRACTOR SHALL PROVIDE THE SUBMITTAL IN ELECTRONIC PORTABLE DOCUMENT FORMAT (PDF) PER THE SPECIFICATIONS.
   c. THE OMISSION FROM THE SHOP DRAWINGS OF ANY MATERIALS REQUIRED BY THE CONTRACT DOCUMENTS TO BE FURNISHED SHALL NOT RELIEVE THE CONTRACTOR OF THE RESPONSIBILITY OF FURNISHING AND INSTALLING SUCH MATERIALS, REGARDLESS OF WHETHER THE SHOP DRAWINGS HAVE BEEN REVIEWED AND APPROVED.

C. REPRODUCTION

1. THE USE OF ELECTRONIC FILES OR REPRODUCTIONS OF THESE CONTRACT DOCUMENTS BY ANY CONTRACTOR, SUBCONTRACTOR, ERECTOR, FABRICATOR, OR MATERIAL SUPPLIER IN LIEU OF PREPARATION OF SHOP DRAWINGS SIGNIFIES THEIR ACCEPTANCE OF ALL INFORMATION SHOWN HEREON AS CORRECT, AND OBLIGATES THEMSELVES TO ANY JOB EXPENSE, REAL OR IMPLIED, ARISING DUE TO ANY ERRORS THAT MAY OCCUR HEREON.

PART XI - MISCELLANEOUS

A. CONTRACT DOCUMENTS

1. IT IS THE RESPONSIBILITY OF THE GENERAL CONTRACTOR TO OBTAIN ALL CONTRACT DOCUMENTS AND LATEST ADDENDA AND TO SUBMIT SUCH DOCUMENTS TO ALL SUBCONTRACTORS AND MATERIAL SUPPLIERS PRIOR TO THE SUBMITTAL OF SHOP DRAWINGS, FABRICATION OF ANY STRUCTURAL MEMBERS, AND ERECTION IN THE FIELD.
2. THE CONTRACT STRUCTURAL DRAWINGS AND SPECIFICATIONS REPRESENT THE FINISHED STRUCTURE, AND, EXCEPT WHERE SPECIFICALLY SHOWN, DO NOT INDICATE THE METHOD OR MEANS OF CONSTRUCTION. THE CONTRACTOR SHALL SUPERVISE AND DIRECT THE WORK AND SHALL BE SOLELY RESPONSIBLE FOR ALL CONSTRUCTION MEANS, METHODS, PROCEDURES, TECHNIQUES, AND SEQUENCE.
3. OPENINGS THROUGH FLOORS, ROOFS, AND WALLS FOR DUCTS, PIPING, AND/OR CONDUIT SHALL BE COORDINATED BY THE CONTRACTOR. CONTRACTOR SHALL VERIFY SIZES AND LOCATIONS OF HOLES AND OPENINGS WITH THE MECHANICAL, ELECTRICAL, PLUMBING, AND FIRE PROTECTION DRAWINGS AND THE RESPECTIVE SUBCONTRACTORS.
4. REFER TO DRAWINGS OTHER THAN STRUCTURAL FOR COMPLETE INFORMATION INCLUDING: TYPES OF FLOOR SLAB FINISHES AND THEIR LOCATIONS, FLOOR SLAB DEPRESSIONS AND CURBS, OPENINGS IN STRUCTURAL WALLS, ROOFS AND FLOORS REQUIRED BY ARCHITECTURAL AND MEP FEATURES, STAIRS, RAMPS, ETC.
5. WHERE MEMBER LOCATIONS ARE NOT SPECIFICALLY DIMENSIONED, MEMBERS ARE EITHER LOCATED ON COLUMNS LINES OR ARE EQUALLY SPACED BETWEEN LOCATED MEMBERS.
6. IF CERTAIN FEATURES ARE NOT FULLY SHOWN OR SPECIFIED ON THE DRAWINGS OR IN THE SPECIFICATIONS, THEIR CONSTRUCTION SHALL BE OF THE SAME CHARACTER AS SHOWN OR SPECIFIED IN SIMILAR CONDITIONS.

B. DRAWING CONFLICTS

1. THE GENERAL CONTRACTOR SHALL COMPARE THE ARCHITECTURAL AND STRUCTURAL DRAWINGS AND REPORT ANY DISCREPANCY BETWEEN EACH SET OF DRAWINGS AND WITHIN EACH SET OF DRAWINGS TO THE ARCHITECT AND ENGINEER PRIOR TO THE FABRICATION AND INSTALLATION OF ANY STRUCTURAL MEMBERS.

C. CONFLICTS IN STRUCTURAL REQUIREMENTS

1. WHERE CONFLICT EXISTS AMONG THE VARIOUS PARTS OF THE STRUCTURAL CONTRACT DOCUMENTS, STRUCTURAL DRAWINGS, GENERAL NOTES, AND SPECIFICATIONS, THE STRICTEST REQUIREMENTS, AS INDICATED BY THE ENGINEER, SHALL GOVERN.

D. EXISTING CONDITIONS

1. THE GENERAL CONTRACTOR SHALL VERIFY ALL DIMENSIONS AND CONDITIONS OF THE EXISTING BUILDING AT THE JOB SITE AND REPORT ANY DISCREPANCIES FROM ASSUMED CONDITIONS SHOWN ON THE DRAWINGS TO THE ARCHITECT AND ENGINEER PRIOR TO THE FABRICATION AND ERECTION OF ANY MEMBERS.
2. WORK SHOWN ON THE DRAWINGS IS NEW, UNLESS NOTED AS EXISTING.
3. EXISTING CONSTRUCTION SHOWN ON THE DRAWINGS WAS OBTAINED FROM EXISTING CONSTRUCTION DOCUMENTS AND LIMITED SITE OBSERVATION. THESE DRAWINGS OF EXISTING CONSTRUCTION ARE AVAILABLE FOR CONTRACTOR USE. HOWEVER, THE AVAILABLE DRAWINGS OF EXISTING CONSTRUCTION ARE NOT NECESSARILY COMPLETE. THE CONTRACTOR SHALL FIELD VERIFY ALL PERTINENT INFORMATION.
4. DEMOLITION, CUTTING, DRILLING, ETC. OF EXISTING WORK SHALL BE PERFORMED WITH GREAT CARE SO AS NOT TO JEOPARDIZE THE STRUCTURAL INTEGRITY OF THE EXISTING BUILDING. IF ANY ARCHITECTURAL, STRUCTURAL, OR MEP MEMBERS NOT DESIGNATED FOR REMOVAL INTERFERE WITH THE NEW WORK, THE ARCHITECT SHALL BE NOTIFIED IMMEDIATELY AND APPROVAL OBTAINED PRIOR TO REMOVAL OF THOSE MEMBERS.
5. THE CONTRACTOR SHALL SAFELY SHORE EXISTING CONSTRUCTION WHEREVER EXISTING SUPPORTS ARE REMOVED TO ALLOW THE INSTALLATION OF NEW WORK. ALL SHORING METHODS AND SEQUENCING OF DEMOLITION SHALL BE THE RESPONSIBILITY OF THE CONTRACTOR AND HIS ENGINEER.
6. THE CONTRACTOR SHALL VERIFY THE LOCATION OF EXISTING UTILITIES PRIOR TO THE START OF CONSTRUCTION AND TAKE CARE TO PROTECT EXISTING UTILITIES THAT ARE TO REMAIN IN SERVICE.
7. THE CONTRACTOR SHALL REPAIR ALL DAMAGE CAUSED DURING CONSTRUCTION WITH SIMILAR MATERIALS AND WORKMANSHIP TO RESTORE CONDITIONS TO LEVELS ACCEPTABLE TO THE ARCHITECT.

E. ADJACENT BUILDINGS AND PROPERTY

1. THE GENERAL CONTRACTOR SHALL ENSURE THAT ALL CONSTRUCTION METHODS USED WILL NOT CAUSE DAMAGE TO THE ADJACENT BUILDINGS AND PROPERTY. THIS SHALL INCLUDE ALL FOUNDATION INSTALLATION.
2. THE GENERAL CONTRACTOR IS ADVISED TO PERFORM ALL PHOTOGRAPHIC SURVEYS AND OTHER DOCUMENTATION OF THE ADJACENT BUILDINGS BEFORE THE START OF AND DURING CONSTRUCTION.

F. RESPONSIBILITY OF THE CONTRACTOR FOR STABILITY OF THE STRUCTURE DURING CONSTRUCTION

1. ALL STRUCTURAL ELEMENTS OF THE PROJECT HAVE BEEN DESIGNED BY THE STRUCTURAL ENGINEER TO RESIST THE REQUIRED CODE VERTICAL AND LATERAL FORCES THAT COULD OCCUR IN THE FINAL COMPLETED STRUCTURE ONLY. THE ABILITY OF THE STRUCTURAL FRAME TO RESIST THE REQUIRED CODE FORCES DERIVES FROM THE COMPLETE INSTALLATION OF THE LATERAL FORCE RESISTING SYSTEMS AND DIAPHRAGMS DESCRIBED BELOW. IT IS THE RESPONSIBILITY OF THE CONTRACTOR TO DESIGN AND PROVIDE ALL REQUIRED BRACING DURING CONSTRUCTION TO MAINTAIN THE STABILITY AND SAFETY OF ALL STRUCTURAL ELEMENTS DURING THE CONSTRUCTION PROCESS UNTIL THE LATERAL-LOAD RESISTING OR STABILITY-PROVIDING SYSTEM IS COMPLETELY INSTALLED AND ALL DESIGNATED CONCRETE ELEMENTS (IF ANY) HAVE REACHED A MINIMUM OF 75% OF THEIR DESIGN STRENGTH. THIS INCLUDES DESIGNING FOR ALL APPLICABLE TEMPORARY, CONSTRUCTION AND ENVIRONMENTAL FORCES PER ASCE 37 INCLUDING BUT NOT LIMITED TO WIND AND SEISMIC ON THE STRUCTURE DURING CONSTRUCTION. THE REQUIRED STRUCTURAL ELEMENTS ARE:
   a. LIGHT FRAMED WOOD LOADBEARING WALL SYSTEM: NEW LIBRARY/TUTORIAL BUILDING
      1) LATERAL-FORCE RESISTING SYSTEM: WOOD FRAMED AND PLYWOOD SHEATHED SHEAR WALLS UPON WHICH ROOF FRAMING ELEMENTS BEAR.
      2) DIAPHRAGM: WOOD FRAMED AND PLYWOOD SHEATHED ROOF.
   b. SLAB-ON-GRADE: THE SLAB-ON-GRADE IS NOT USED AS A STRUCTURAL DIAPHRAGM.

G. RESPONSIBILITY OF THE CONTRACTOR FOR CONSTRUCTION LOADS

1. THE EXISTING STRUCTURE HAS BEEN DESIGNED FOR THE LOADS IDENTIFIED IN THE AS-BUILT STRUCTURAL DRAWINGS. THE CONTRACTOR SHALL NOT OVERLOAD THE STRUCTURE DURING CONSTRUCTION. THE CONTRACTOR SHALL BE RESPONSIBLE FOR CHECKING THE ADEQUACY OF THE STRUCTURE TO SUPPORT ANY APPLIED CONSTRUCTION LOADS, INCLUDING THOSE DUE TO CONSTRUCTION VEHICLES OR EQUIPMENT, MATERIAL HANDLING OR STORAGE, SHORING OR RESHORING, OR ANY OTHER CONSTRUCTION ACTIVITY. THE CONTRACTOR SHALL SUBMIT CALCULATIONS SIGNED AND SEALED BY AN ENGINEER LICENSED IN THE STATE OF CALIFORNIA VERIFYING THE ADEQUACY OF THE STRUCTURE FOR ANY PROPOSED CONSTRUCTION LOADS THAT ARE IN EXCESS OF THE STATED DESIGN LOADS. THE STRUCTURAL ENGINEER IS NOT RESPONSIBLE TO DESIGN OR CHECK THE STRUCTURE FOR LOADS APPLIED TO THE STRUCTURE FOR ANY CONSTRUCTION ACTIVITY.

H. CONTRACTOR SUBSTITUTIONS

1. ANY MATERIALS OR PRODUCTS SUBMITTED FOR APPROVAL THAT ARE DIFFERENT FROM THE MATERIAL OR PRODUCTS SPECIFIED IN THE STRUCTURAL CONTRACT DOCUMENTS WILL BE APPROVED ONLY IF THE FOLLOWING CRITERIA ARE SATISFIED:
   a. A COST SAVINGS TO THE DISTRICT IS DOCUMENTED AND SUBMITTED WITH THE REQUEST.
   b. THE MATERIAL OR PRODUCT HAS BEEN APPROVED BY THE INTERNATIONAL CODE COUNCIL (ICC) AND THE ICC REPORT IS SUBMITTED WITH THE REQUEST.
      1) THE ICC ESR THAT IS SUBMITTED MUST REFERENCE THE BUILDING CODE UNDER WHICH THE PROJECT IS PERMITTED.
      2) ICC REPORTS THAT HAVE BEEN DISCONTINUED AT THE TIME OF PRODUCT INSTALLATION WILL NOT BE ACCEPTED.
   c. THE CONTRACTOR AGREES TO BEAR THE COST OF OBTAINING APPROVAL FROM DSA.
2. SUBMITTALS NOT SATISFYING THE ABOVE CRITERIA WILL NOT BE CONSIDERED.

I. THE STRUCTURAL ENGINEER'S ROLE DURING CONSTRUCTION

1. THE ENGINEER SHALL NOT HAVE CONTROL NOR CHARGE OF, AND SHALL NOT BE RESPONSIBLE FOR, CONSTRUCTION MEANS, METHODS, TECHNIQUES, SEQUENCES, OR PROCEDURES, FOR SAFETY PRECAUTIONS AND PROGRAMS IN CONNECTION WITH THE WORK, FOR THE ACTS OR OMISSION OF THE CONTRACTOR, SUBCONTRACTOR, OR ANY OTHER PERSONS PERFORMING ANY OF THE WORK, OR FOR THE FAILURE OF ANY OF THEM TO CARRY OUT THE WORK IN ACCORDANCE WITH THE CONTRACT DOCUMENTS.
2. PERIODIC SITE OBSERVATION BY FIELD REPRESENTATIVES OF WALTER P. MOORE AND ASSOCIATES IS SOLELY FOR THE PURPOSE OF BECOMING GENERALLY FAMILIAR WITH THE PROGRESS AND QUALITY OF THE WORK COMPLETED AND DETERMINING, IN GENERAL, IF THE WORK OBSERVED IS BEING PERFORMED IN A MANNER INDICATING THAT THE WORK, WHEN FULLY COMPLETED, WILL BE IN ACCORDANCE WITH THE STRUCTURAL CONTRACT DOCUMENTS. THIS LIMITED SITE OBSERVATION SHOULD NOT BE CONSTRUED AS EXHAUSTIVE OR CONTINUOUS TO CHECK THE QUALITY OR QUANTITY OF THE WORK, BUT RATHER PERIODIC IN AN EFFORT TO KEEP THE OWNER REASONABLY INFORMED ABOUT THE PROGRESS AND QUALITY OF THE PORTION OF THE STRUCTURE COMPLETED.

PART XII - DRAWING INTERPRETATION

A. DRAWING VIEWS LABELED AS "TYPICAL"

1. PARTIAL PLANS, ELEVATIONS, SECTIONS, DETAILS, OR SCHEDULES LABELED WITH "TYPICAL" AT THE BEGINNING OF THEIR TITLE SHALL APPLY TO ALL SITUATIONS OCCURRING ON THE PROJECT THAT ARE THE SAME OR SIMILAR TO THOSE SPECIFICALLY SHOWN. THE APPLICABILITY OF THE CONTENT OF THESE VIEWS TO LOCATIONS ON THE PLAN CAN BE DETERMINED FROM THE TITLE OF THE VIEWS. SUCH VIEWS SHALL APPLY WHETHER OR NOT THEY ARE KEYED IN AT EACH LOCATION. DECISIONS REGARDING APPLICABILITY OF THESE "TYPICAL" VIEWS SHALL BE DETERMINED BY THE STRUCTURAL ENGINEER.

B. STRUCTURAL ABBREVIATIONS, SYMBOLS, AND NOTATIONS

1. REFER TO SHEET S0.03 FOR ABBREVIATIONS, SYMBOLS, AND NOTATIONS USED ON THE STRUCTURAL DRAWINGS.

PART XIII - POST INSTALLED ANCHORS IN CONCRETE

A. GENERAL

1. INSTALL ANCHORS IN ACCORDANCE WITH THE ANCHOR'S ICC-ES REPORT AND THE MANUFACTURER'S RECOMMENDATIONS. IN CASE OF CONFLICT, THE REQUIREMENTS OF THE ICC-ES REPORT SHALL GOVERN.
2. TAKE NECESSARY STEPS TO AVOID CUTTING OR DAMAGING EXISTING REINFORCING BARS.
3. SPECIAL INSPECTION, AS DEFINED BY THE 2016 CBC, IS REQUIRED FOR ALL POST-INSTALLED CONCRETE ANCHORS.
4. FIELD TESTING OF POST-INSTALLED ANCHORS IS REQUIRED UNLESS NOTED OTHERWISE.

B. EXPANSION ANCHORS

1. EXPANSION ANCHORS 3/8" DIA. THROUGH 3/4" DIA. SHALL BE HILTI KWIK BOLT TZ, CARBON STEEL, ICC-ES REPORT ESR-1917 DATED 05/2017.
2. EXPANSION ANCHORS 1/4" DIA. SHALL BE HILTI KWIK BOLT 3, ICC-ES REPORT ESR-2302 DATED 12/2017, USED IN NON-SEISMIC APPLICATIONS ONLY.
3. THE USE OF CARBON STEEL ANCHORS IS LIMITED TO DRY, INTERIOR LOCATIONS. AT EXTERIOR APPLICATIONS AND OTHER WET CONDITIONS OF USE, EXPANSION ANCHORS SHALL BE STAINLESS STEEL ANCHORS.
4. FOLLOW THE MANUFACTURER'S INSTRUCTIONS TO DETERMINE PROPER ANCHOR HOLE DIAMETER AND HOLE DEPTH, SPACING AND EDGE DISTANCES. ANCHOR HOLE DEPTH FOR INSTALLATION IS GREATER THAN THE EFFECTIVE EMBEDMENT DEPTH.
5. EXPANSION ANCHOR MINIMUM EMBEDMENT VALUES AND FIELD TEST VALUES FOR ANCHORS INSTALLED IN NORMAL WEIGHT CONCRETE SHALL BE THE FOLLOWING, UNLESS NOTED OTHERWISE IN THE DRAWINGS:

ANCHOR DIAMETER (in)	MIN. EFFECTIVE EMBEDMENT (in)	MIN. SLAB OR MEMBER THICKNESS (in)	MIN. ANCHOR SPACING (in)	TENSION TEST VALUE FOR 3000 PSI CONCRETE	TORQUE TEST VALUE (ft-lbs)
1/4	1.5	4.0	4.5	800	4
3/8	2.0	4.5	6.0	1100	25
1/2	3.25	6.0	9.75	2000	40
5/8	4	7.25	12.0	2300	60
3/4	4.75	8.0	14.25	3700	110

6. FIELD TESTING OF ANCHORS SHALL BE PERFORMED IN THE PRESENCE OF THE PROJECT INSPECTOR AND BE IN ACCORDANCE WITH CBC 1910A.5.
   a. TESTING MAY BE PERFORMED AS A TENSION TEST OR TORQUE TEST. IF THE MANUFACTURER'S RECOMMENDED INSTALLATION TORQUE IS LESS THAN THE TEST TORQUE NOTED IN THE TABLE, THE INSTALLATION TORQUE SHALL BE USED IN LIEU OF THE TABULATED TEST VALUE.
   b. TEST 50% OF ANCHORS IN EACH DIAMETER GROUP IN NON-STRUCTURAL APPLICATIONS, INCLUDING BUT NOT LIMITED TO EQUIPMENT ANCHORAGE, CONDUIT AND PIPING SUPPORT, CEILING WIRES, ETC., EXCEPT WHERE NOTED OTHERWISE.
   c. TEST 10% OF ANCHORS IN EACH DIAMETER GROUP WHERE USED IN SILL PLATE BOLTING APPLICATIONS.
   d. IF ANY ANCHOR FAILS TESTING, TEST ALL ANCHORS OF THE SAME TYPE NOT PREVIOUSLY TESTED, UNTIL 20 CONSECUTIVE ANCHORS PASS, THEN RESUME THE INITIAL TEST FREQUENCY. IN NONSTRUCTURAL APPLICATIONS, THE 20 ANCHORS SHALL BE ONLY THOSE INSTALLED BY THE SAME TRADE.
   e. TEST ACCEPTANCE CRITERIA – ACCEPTANCE CRITERIA FOR EXPANSION ANCHORS SHALL BE BASED ON THE ICC-ESR OR MANUFACTURER'S WRITTEN INSTRUCTION, ACCEPTABLE TO THE ENFORCEMENT AGENCY. FIELD TESTS SHALL SATISFY THE FOLLOWING MINIMUM REQUIREMENTS:
      - TENSION TESTS – ANCHORS TESTED WITH A HYDRAULIC JACK OR SPRING LOADED DEVICE SHALL MAINTAIN THE TEST LOAD FOR A MINIMUM OF 15 SECONDS AND SHALL EXHIBIT NO DISCERNABLE MOVEMENT DURING THE TENSION TEST, SUCH AS EVIDENCED BY LOOSENING OF THE WASHER UNDER THE NUT. REACTION LOADS FROM TEST FIXTURES MAY BE APPLIED CLOSE TO THE ANCHOR BEING TESTED SO LONG AS THE ANCHOR IS NOT RESTRAINED FROM WITHDRAWING BY THE FIXTURE.
      - TORQUE TESTS – TEST WITH A CALIBRATED TORQUE WRENCH; THE SPECIFIED TEST TORQUE MUST BE REACHED WITHIN ONE-HALF TURN OF THE NUT.
   f. TESTING PROCEDURES SHALL BE AS REQUIRED BY THE ICC-ESR. MANUFACTURER'S RECOMMENDATION FOR TESTING MAY BE APPROVED BY THE ENFORCEMENT AGENCY WHEN ICC-ESR DOES NOT PROVIDE A TESTING PROCEDURE.
   g. TEST EQUIPMENT, INCLUDING TORQUE WRENCHES, SHALL BE CALIBRATED BY AN APPROVED TESTING LABORATORY IN ACCORDANCE WITH STANDARD RECOGNIZED PROCEDURES.

C. EPOXY ANCHORS

1. EPOXY FOR ANCHORING REBAR AND THREADED ROD TO CONCRETE SHALL BE SIMPSON SET-3G EPOXY, ICC-ESR #4057, DATED 04/2018.
2. COMPLY WITH MANUFACTURER'S INSTRUCTIONS AND RECOMMENDATIONS FOR THE INSTALLATION OF EPOXY ANCHORED REBAR. PROVIDE HOLES WITH DIAMETER AND DEPTH AS SPECIFIED BY THE MANUFACTURER UNLESS NOTED OTHERWISE ON THE DRAWINGS.
3. SPECIAL INSPECTION OF EPOXY REBAR DOWELS IS REQUIRED.

NOLL & TAM ARCHITECTS

729 Heinz Avenue
Berkeley, CA 94710
tel 510.542.2200
fax 510.542.2201

SEAL

REGISTERED PROFESSIONAL ENGINEER
TANJEET JUNEJA
72676
CIVIL
STATE OF CALIFORNIA

APPROVALS

FILE NUMBER: 07-C1

DIVISION OF THE STATE ARCHITECT

APP# 01-117630

ACS________FLS________SSS________
Date:

WALTER P MOORE

PROJECT TITLE

CONTRA COSTA CCD
D-4002
DVC SAN RAMON CAMPUS EXPANSION & RENOVATION

1690 Watermill Rd.
San Ramon, CA 94582

ISSUE TITLE

INCREMENT 1 - RENOVATION - FINAL

ISSUE DATE 10/07/2021
NOLL & TAM JOB NUMBER 21630
REVISIONS
| DATE | DESCRIPTION

SHEET TITLE

STRUCTURAL GENERAL NOTES

SHEET NUMBER

S0.01.1

10/7/2021 12:37:19 PM BIM 360://S13-16009-00 DVC San Ramon Campus Expansion (INCR1)/S_DVCSR_EXPANSION_INCR1_R18.rvt

STRUCTURAL SYMBOLS AND NOTATIONS

MATERIAL IDENTIFICATION SYMBOLS

THE FOLLOWING MATERIAL IDENTIFICATION SYMBOLS MAY BE USED IN THE SECTIONS AND DETAILS:

ALUMINUM | CAST-IN-PLACE CONCRETE | EARTH | EARTH (UNDISTURBED) | EXISTING CONSTRUCTION | GRAVEL | GROUT

MASONRY | POLYSTYRENE | RIGID INSULATION | ROCK | STEEL | GLULAM | WOOD

THE FOLLOWING MATERIAL IDENTIFICATION SYMBOLS MAY BE USED IN THE PLANS:

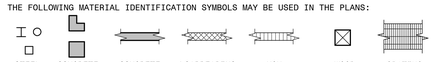

STEEL COLUMN | CONCRETE COLUMN | CONCRETE WALL | LOADBEARING MASONRY WALL | NON-LOADBEARING MASONRY WALL | WOOD COLUMN | GRATING

BOUNDARY OF EXISTING CONSTRUCTION

BOUNDARY OF EXISTING CONSTRUCTION TO BE DEMOLISHED

BOUNDARY OF FUTURE EXPANSION

BOUNDARY OF CONCRETE TOPPING SLAB POURED ON SUBSTRUCTURE

SYMBOLIC LINEWORK

THE FOLLOWING SYMBOLIC LINEWORK MAY BE USED THROUGHOUT THE DRAWINGS:

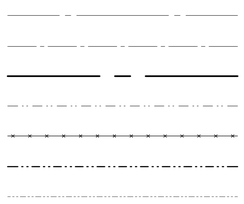

REFERENCE GRID LINE SYMBOL
CENTERLINE SYMBOL
PLAN MATCHLINE SYMBOL
NON-STRUCTURAL LINE SYMBOL
WELDED WIRE REINFORCEMENT SYMBOL
STEEL JOIST LINE SYMBOL
OPENING LINE SYMBOL

VIEW REFERENCE SYMBOLS

THESE FOLLOWING SYMBOLS MAY BE USED THROUGHOUT THE DRAWINGS TO REFER TO OTHER VIEWS:

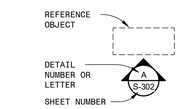

FRAMING ELEVATION SYMBOL

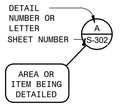

DETAIL REFERENCE SYMBOL

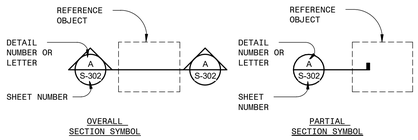

OVERALL SECTION SYMBOL

PARTIAL SECTION SYMBOL

UNIVERSAL SYMBOLS

THESE FOLLOWING SYMBOLS MAY BE USED THROUGHOUT THE DRAWINGS:

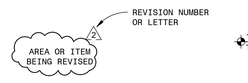

REVISION CLOUD SYMBOL

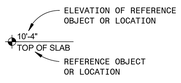

ELEVATION DESIGNATION SYMBOL

REFERENCE GRID INDICATOR SYMBOL

WORK POINT SYMBOL

FLAT FACE BREAK MARK

CURVED FACE BREAK MARK

LINE BREAK MARK

PLAN SYMBOLS

THE FOLLOWING SYMBOLS MAY BE USED THROUGHOUT THE PLANS.

SLOPE TRANSITION INDICATOR SYMBOL

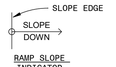

RAMP SLOPE INDICATOR SYMBOL

SLOPE PITCH INDICATOR SYMBOL

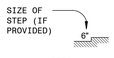

STEP INDICATOR SYMBOL

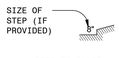

STEP TO SLOPE INDICATOR SYMBOL

RIDGE INDICATOR SYMBOL

PROJECT NORTH ARROW SYMBOL

BORING LOCATION SYMBOL

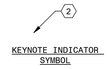

KEYNOTE INDICATOR SYMBOL

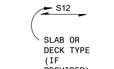

ONE-WAY SLAB OR DECK SPAN INDICATOR SYMBOL

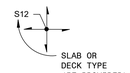

TWO-WAY SLAB SPAN INDICATOR SYMBOL

SMALL OPENINGS IN STRUCTURAL SLAB OR DECK

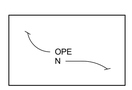

LARGE OPENING IN STRUCTURAL SLAB OR DECK

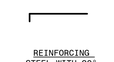

REINFORCING STEEL WITH 90° HOOK

REINFORCING STEEL WITH 180° HOOK

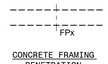

CONCRETE FRAMING PENETRATION

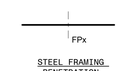

STEEL FRAMING PENETRATION

PASS-THROUGH FORCE SYMBOL

BRACE/KICKER DIRECTION INDICATOR SYMBOL

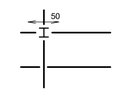

CONNECTION WITH PASS THROUGH FORCE

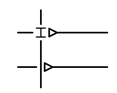

MOMENT CONNECTION (NON-SEISMIC)

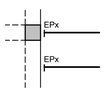

CONNECTION TO CONCRETE WITH EMBEDDED PLATE

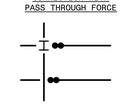

CONNECTION WITH TWO COLUMNS OF BOLTS

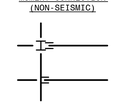

CONNECTION WITH DOUBLE SHEAR PLATE

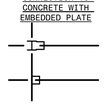

CONNECTION WITH FULL-DEPTH SHEAR PLATE

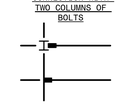

CONNECTION WITH GUSSET AND WELDED FLANGES

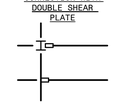

CONNECTION WITH GUSSET

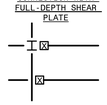

SPECIAL CONNECTION (TYPE X)

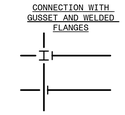

CONNECTION WITH WELDED TOP FLANGE

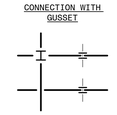

BEAM SPLICE CONNECTION (SHEAR ONLY)

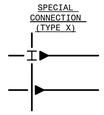

MOMENT CONNECTION (SEISMIC)

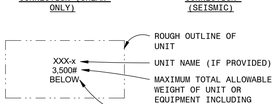

MECHANICAL UNIT OR OTHER EQUIPMENT

STRUCTURAL ELEMENTS TAGS

THE FOLLOWING STRUCTURAL ELEMENT TAGS, USED IN CONJUNCTION WITH SCHEDULES, MAY APPEAR ON THE DRAWINGS:

- Bxx DENOTES SLAB BOTTOM REINFORCEMENT TYPE "xx"
- BMxx DENOTES CONCRETE BEAM TYPE "xx"
- BPxx DENOTES BASE PLATE TYPE "xx"
- Cxx DENOTES COLUMN TYPE "xx"
- CFxx DENOTES CONTINUOUS FOOTING TYPE "xx"
- DPxx DENOTES DRILLED PIER TYPE "xx"
- EPxx DENOTES EMBEDDED PLATE TYPE "xx"
- Fxx DENOTES SPREAD FOOTING TYPE "xx"
- FPxx DENOTES FRAMING PENETRATION TYPE "xx"
- GBxx DENOTES GRADE BEAM TYPE "xx"
- MWxx DENOTES CMU WALL TYPE "xx"
- Pxx DENOTES PIER TYPE "xx"
- PCxx DENOTES PILE OR PIER CAP TYPE "xx"
- Sxx DENOTES ONE-WAY SLAB TYPE "xx"
- SRxx DENOTES HEADED SHEAR STUD REINFORCEMENT TYPE "xx"
- SFxx DENOTES STRIP FOOTING TYPE "xx"
- Txx DENOTES SLAB TOP REINFORCEMENT TYPE "xx"
- WFxx DENOTES WALL FOOTING TYPE "xx"

ABBREVIATIONS

THE FOLLOWING ABBREVIATIONS MAY BE USED IN THE DRAWINGS:

@	AT
&	AND
#	NUMBER
Ø	ROUND, DIAMETER
ADDL	ADDITIONAL
AESS	ARCHITECTURAL EXPOSED STRUCTURAL STEEL
AFF	ABOVE FINISHED FLOOR
AHU	AIR HANDLING UNIT
ALT	ALTERNATE
APPROX	APPROXIMATE
AR	ANCHOR ROD
ARCH	ARCHITECTURAL
BC	BOTTOM OF COLUMN
BF	BRACED FRAME
BLDG	BUILDING
BLK	BLOCK
BLKG	BLOCKING
BM	BEAM
BO	BOTTOM OF
BOD	BOTTOM OF DECK
BOT	BOTTOM
BRDG	BRIDGING
BRG	BEARING
BTWN	BETWEEN
C	CAMBER
CANTIL	CANTILEVER
CFSF	COLD-FORMED STEEL FRAMING
CIP	CAST-IN-PLACE
CJ	CONSTRUCTION/CONTROL JOINT
CJP	COMPLETE JOINT PENETRATION
CL	CENTERLINE
CMU	CONCRETE MASONRY UNIT
COL	COLUMN
CONC	CONCRETE
CONN	CONNECTION
CONSTR	CONSTRUCTION
CONT	CONTINUOUS
COORD	COORDINATE
COV	COVER
CTRS	CENTERS
db	BAR DIAMETER
DBA	DEFORMED BAR ANCHOR
DCW	DEMAND CRITICAL WELD
DET	DETAIL
DIA	DIAMETER
DIM	DIMENSION
DWG	DRAWING
EA	EACH
EF	EACH FACE
EJ	EXPANSION JOINT
EL	ELEVATION
ELEV	ELEVATOR
EMBED	EMBEDMENT, EMBEDDED
EN	EDGE NAIL
ENGR	ENGINEER
EQ	EQUAL
EQUIP	EQUIPMENT
EQUIV	EQUIVALENT
EW	EACH WAY
(E)	EXISTING
EXP	EXPANSION
EXT	EXTERIOR
FAB	FABRICATE
f'c=	28 DAY CONCRETE STRENGTH=
f'm=	28 DAY MASONRY STRENGTH=
FD	FLOOR DRAIN
FDTN	FOUNDATION
FF	FAR FACE
FIN	FINISH(ED)
FLR	FLOOR
FS	FAR SIDE
FTG	FOOTING
FUT	FUTURE
FV	FIELD VERIFY
Fy=	YIELD STRENGTH=
GALV	GALVANIZE(D)
GEN	GENERAL
GLB	GLULAM BEAM
GR	GRADE
H	HORIZONTAL REACTION
HGR	HANGER
HORIZ	HORIZONTAL
HSA	HEADED STUD ANCHOR
HSS	HOLLOW STRUCTURAL SECTION
ID	INSIDE DIAMETER
INFO	INFORMATION
INT	INTERIOR
JST	JOIST
JT	JOINT
K	KIPS (1000 LBS)
KSF	KIPS PER SQUARE FOOT
KSI	KIPS PER SQUARE INCH
LBS	POUNDS
Ld	DEVELOPMENT LENGTH
LLBB	LONG LEG BACK TO BACK
LLH	LONG LEG HORIZONTAL
LLV	LONG LEG VERTICAL
LONG	LONGITUDINAL
LSH	LONG SIDE HORIZONTAL
LSLP	LONG-SLOTTED HOLE PARALLEL
LSLT	LONG-SLOTTED HOLE TRANSVERSE
LSV	LONG SIDE VERTICAL
LWC	LIGHTWEIGHT CONCRETE
M	MOMENT
MAS	MASONRY
MAX	MAXIMUM
MC	MOMENT CONNECTION
MECH	MECHANICAL
MEZZ	MEZZANINE
MFR	MANUFACTURER
MH	HORIZONTAL MOMENT
MIN	MINIMUM
MISC	MISCELLANEOUS
MTL	METAL
NF	NEAR FACE
NIC	NOT IN CONTRACT
NS	NEAR SIDE
NTS	NOT TO SCALE
NWC	NORMALWEIGHT CONCRETE
OC	ON CENTER
OD	OUTSIDE DIAMETER
OPH	OPPOSITE HAND
OPNG	OPENING
OPP	OPPOSITE
OVS	OVERSIZED HOLE
P	AXIAL LOAD
PAF	POWDER ACTUATED FASTENER
PAR	PARALLEL
PCC	PRECAST CONCRETE
PCF	POUNDS PER CUBIC FOOT
PCY	POUNDS PER CUBIC YARD
PERP	PERPENDICULAR
PL	PLATE
PLF	POUNDS PER LINEAR FOOT
PJP	PARTIAL JOINT PENETRATION
PRELIM	PRELIMINARY
PROP	PROPERTY
PSF	POUNDS PER SQUARE FOOT
PSI	POUNDS PER SQUARE INCH
PT	POST-TENSION(ED)
PWD	PLYWOOD
QTY	QUANTITY
R	REACTION
RAD	RADIUS
REF	REFERENCE
REINF	REINFORCEMENT
REM	REMAINDER
REQD	REQUIRED
REV	REVISION
RTU	ROOF TOP UNIT
SAD	SEE ARCHITECTURAL DRAWINGS
SC	SLIP CRITICAL
SCD	SEE CIVIL DRAWINGS
SCHED	SCHEDULE(D)
SDS	SELF-DRILLING SCREW
SECT	SECTION
SED	SEE ELECTRICAL DRAWINGS
SHT	SHEET
SIM	SIMILAR
SLBB	SHORT LEG BACK TO BACK
SLRS	SEISMIC LOAD RESISTING SYSTEM
SMD	SEE MECHANICAL DRAWINGS
SMS	SHEET METAL SCREW
SOG	SLAB-ON-GRADE
SPA	SPACING
SPEC	SPECIFICATION
SPRT	SUPPORT
SQ	SQUARE
SS	STAINLESS STEEL
SSLP	SHORT-SLOTTED HOLE PARALLEL
SSLT	SHORT-SLOTTED HOLE TRANSVERSE
STD	STANDARD
STIF	STIFFENER
STIR	STIRRUP
STL	STEEL
STRUCT	STRUCTURE, STRUCTURAL
SW	SHEAR WALL
SYMM	SYMMETRIC, SYMMETRICAL
T	TORSION
TC	TOP OF COLUMN
THD	THREADED
TO	TOP OF
TOC	TOP OF CONCRETE
TOM	TOP OF MASONRY
TOS	TOP OF STEEL, TOP OF SLAB
TRANS	TRANSVERSE
TYP	TYPICAL
UNO	UNLESS NOTED OTHERWISE
VERT	VERTICAL
WF	WIDE FLANGE
WP	WORK POINT
WS	WATERSTOP
WT	WEIGHT
WWR	WELDED WIRE REINFORCEMENT
XS	EXTRA STRONG
XXS	DOUBLE EXTRA STRONG

FOUNDATION ANNOTATION STYLES

THE FOLLOWING STRUCTURAL ANNOTATIONS MAY APPEAR ON THE FOUNDATION PLANS:

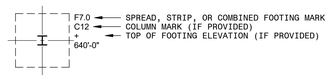

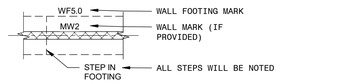

CONCRETE ANNOTATION STYLES

THE FOLLOWING STRUCTURAL ANNOTATIONS MAY APPEAR ON THE CONCRETE FRAMING PLANS

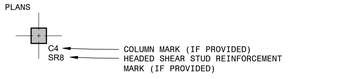

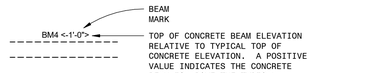

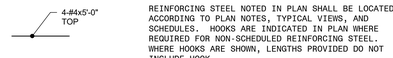

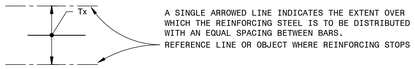

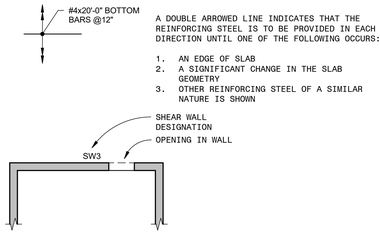

STEEL ANNOTATION STYLES

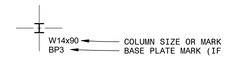

THE FOLLOWING STRUCTURAL ANNOTATIONS MAY APPEAR ON THE STEEL FRAMING PLANS. ALL LOADS INDICATED ARE FACTORED:

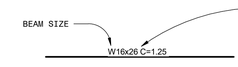

NON-COMPOSITE BEAM

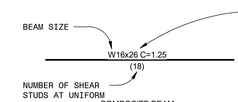

COMPOSITE BEAM

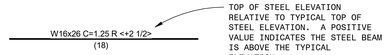

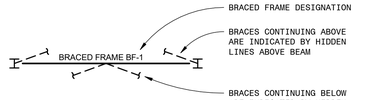

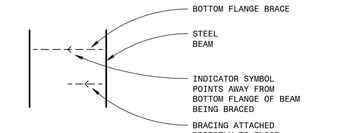

WOOD ANNOTATION STYLES

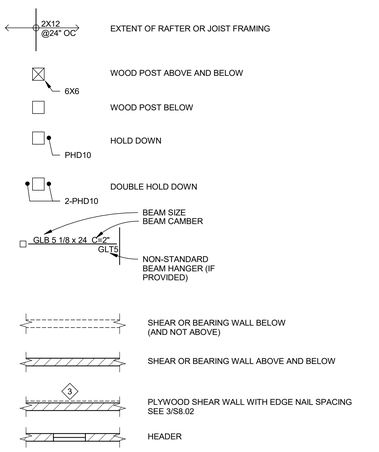

NOLL & TAM ARCHITECTS
729 Heinz Avenue
Berkeley, CA 94710
tel 510.542.2200
fax 510.542.2201

SEAL

REGISTERED PROFESSIONAL ENGINEER TANJEET JUNEJA 72676 CIVIL STATE OF CALIFORNIA

APPROVALS

FILE NUMBER: 07-C1

DIVISION OF THE STATE ARCHITECT
APP# 01-117630
ACS_____ FLS_____ SSS_____
Date:

WALTER P MOORE

PROJECT TITLE

CONTRA COSTA CCD
D-4002
DVC SAN RAMON CAMPUS EXPANSION & RENOVATION

1690 Watermill Rd.
San Ramon, CA 94582

ISSUE TITLE

INCREMENT 1 - RENOVATION - FINAL

ISSUE DATE	10/07/2021
NOLL & TAM JOB NUMBER	21630

REVISIONS

	DATE	DESCRIPTION

SHEET TITLE

SYMBOLS & ABBREVIATIONS

SHEET NUMBER

S0.03.1

10/7/2021 12:37:22 PM BIM 360://13-16009-00 DVC San Ramon Campus Expansion (INCR1)/S_DVCSR_EXPANSION_INCR1_R18.rvt

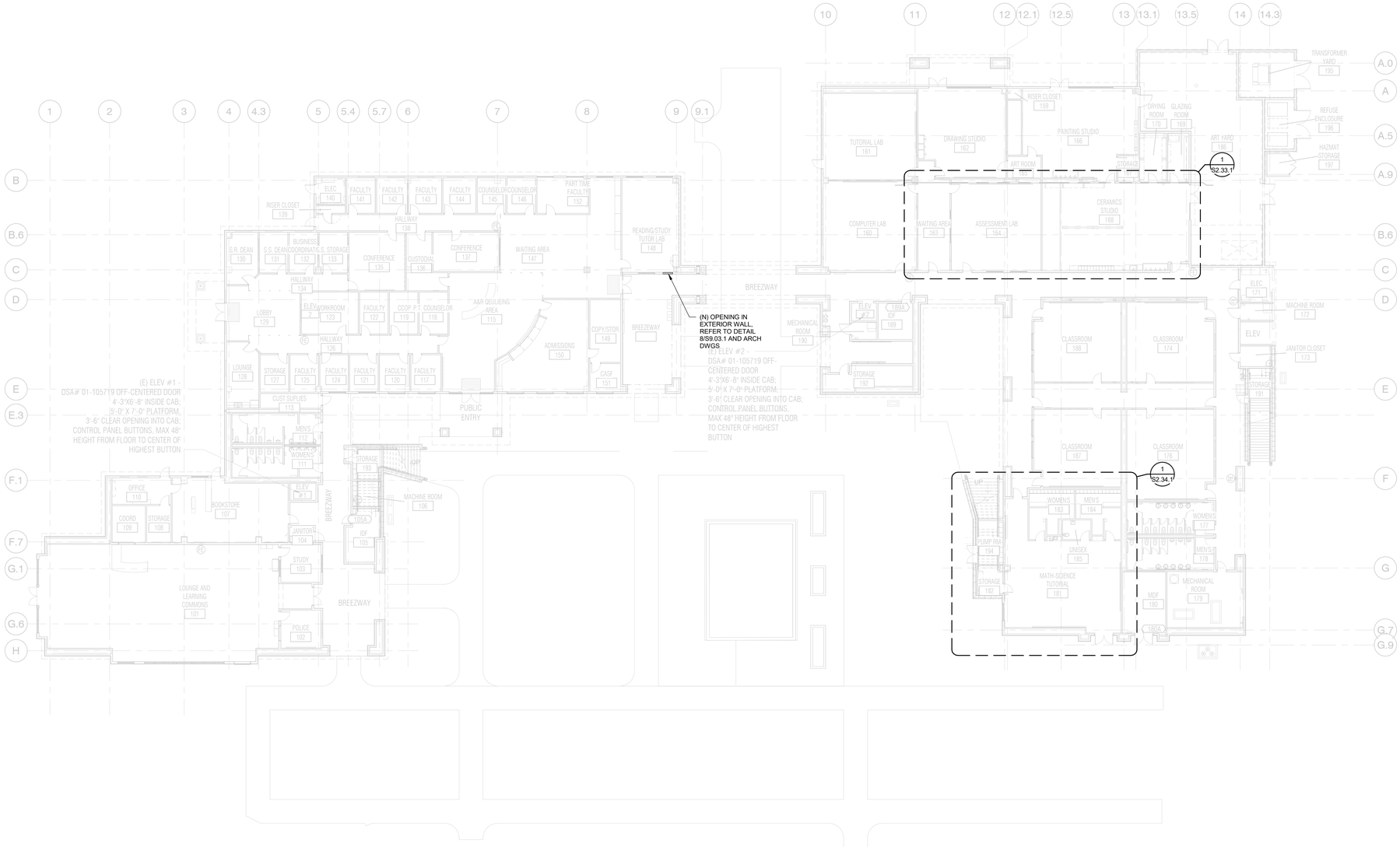

1 FIRST FLOOR KEY PLAN
1/16" = 1'-0"

NOLL & TAM ARCHITECTS

729 Heinz Avenue
Berkeley, CA 94710
tel 510.542.2200
fax 510.542.2201

SEAL

REGISTERED PROFESSIONAL ENGINEER
RANJEET JUNEJA
72676
CIVIL
STATE OF CALIFORNIA

APPROVALS

FILE NUMBER: 07-C1

DIVISION OF THE STATE ARCHITECT

APP# 01-117630

ACS_____FLS_____SSS_____
Date:

WALTER P MOORE

PROJECT TITLE

CONTRA COSTA CCD
D-4002
DVC SAN RAMON CAMPUS EXPANSION & RENOVATION

1690 Watermill Rd.
San Ramon, CA 94582

ISSUE TITLE

INCREMENT 1 - RENOVATION - FINAL

ISSUE DATE	10/07/2021
NOLL & TAM JOB NUMBER	21630

REVISIONS

	DATE	DESCRIPTION

SHEET TITLE

KEY PLAN

SHEET NUMBER

S2.30A.1

10/7/2021 12:37:24 PM BIM 360://S13-16009-00 DVC San Ramon Campus Expansion (INCR1)/S_DVCSR_EXPANSION_INCR1_R18.rvt

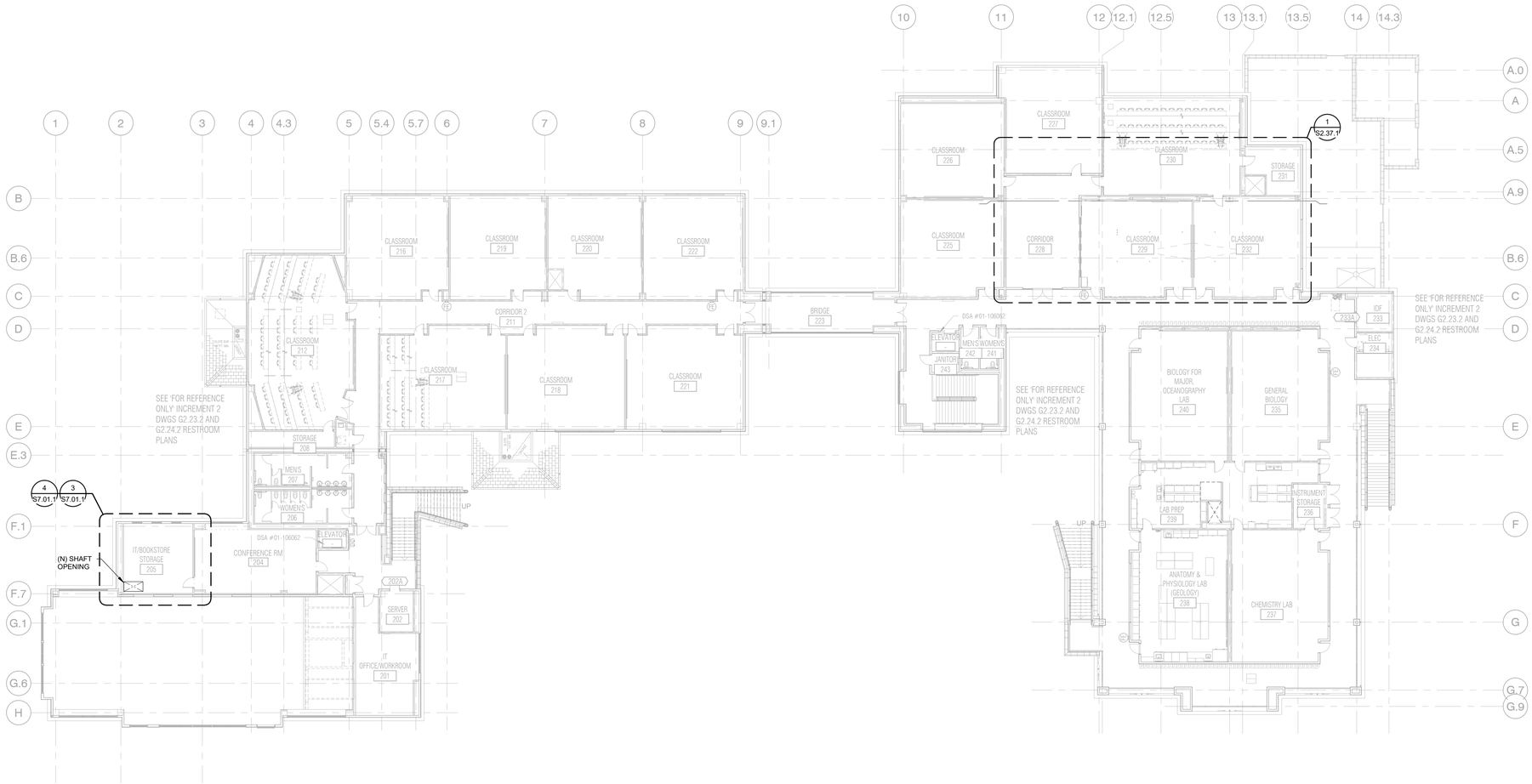

1 SECOND FLOOR KEY PLAN
1/16" = 1'-0"

NOLL & TAM ARCHITECTS

729 Heinz Avenue
Berkeley, CA 94710
tel 510.542.2200
fax 510.542.2201

SEAL

REGISTERED PROFESSIONAL ENGINEER
TANJEET JUNEJA
72676
CIVIL
STATE OF CALIFORNIA

APPROVALS

FILE NUMBER: 07-C1

DIVISION OF THE STATE ARCHITECT

APP# 01-117630

ACS_____FLS_____SSS_____
Date:

WALTER P MOORE

PROJECT TITLE

CONTRA COSTA CCD
D-4002
DVC SAN RAMON CAMPUS EXPANSION & RENOVATION

1690 Watermill Rd.
San Ramon, CA 94582

ISSUE TITLE

INCREMENT 1 - RENOVATION - FINAL

ISSUE DATE	10/07/2021
NOLL & TAM JOB NUMBER	21630

REVISIONS

	DATE	DESCRIPTION

SHEET TITLE

KEY PLAN

SHEET NUMBER

S2.30B.1

10/7/2021 12:37:26 PM BIM 360://S13-16009-00 DVC San Ramon Campus Expansion (INCR1)/S_DVCSR_EXPANSION_INCR1_R18.rvt

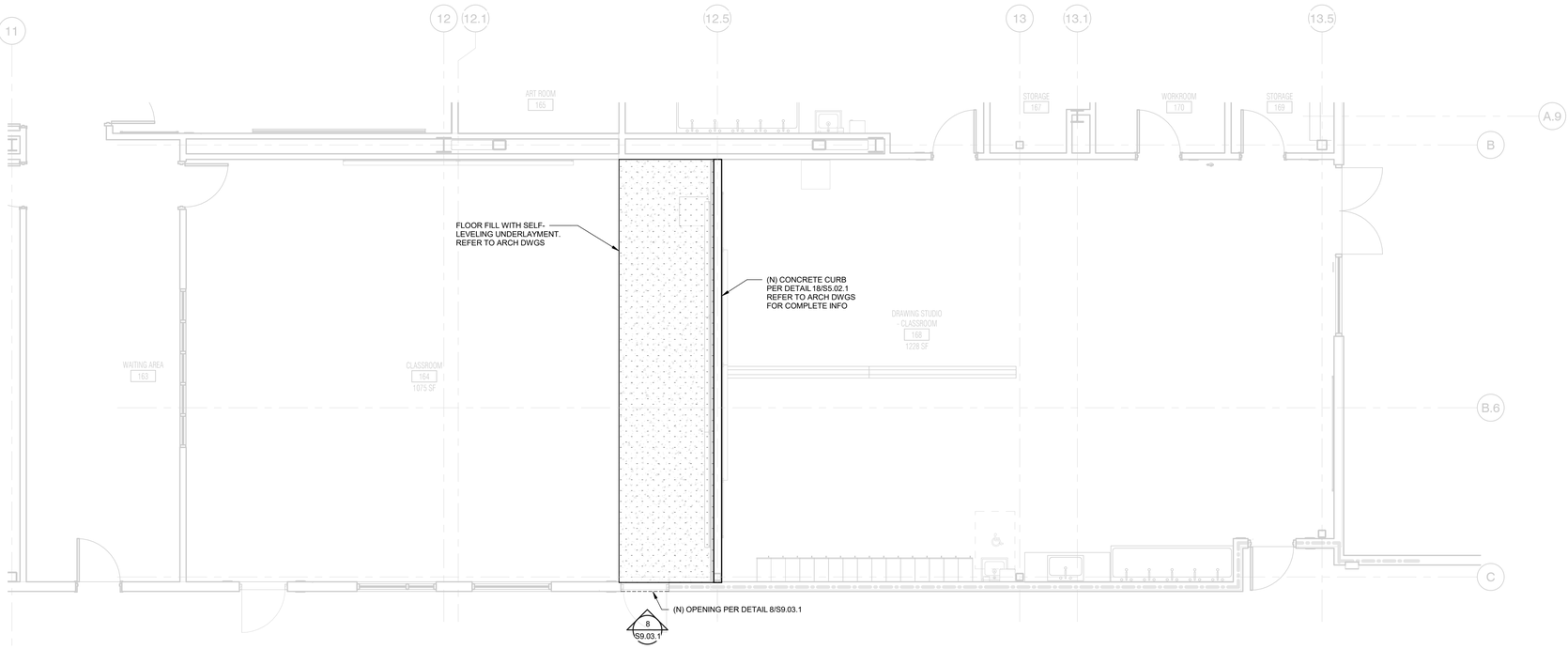

1 FIRST FLOOR - EAST - CLASSROOM DRAWING STUDIO
1/4" = 1'-0"

NOLL & TAM ARCHITECTS
729 Heinz Avenue
Berkeley, CA 94710
tel 510.542.2200
fax 510.542.2201

SEAL

REGISTERED PROFESSIONAL ENGINEER
TANJEET JUNEJA
72676
CIVIL
STATE OF CALIFORNIA

APPROVALS
FILE NUMBER: 07-C1

DIVISION OF THE STATE ARCHITECT
APP# 01-117630
ACS_____FLS_____SSS_____
Date:

WALTER P MOORE

PROJECT TITLE
CONTRA COSTA CCD
D-4002
DVC SAN RAMON CAMPUS EXPANSION & RENOVATION
1690 Watermill Rd.
San Ramon, CA 94582

ISSUE TITLE
INCREMENT 1 - RENOVATION - FINAL

ISSUE DATE	10/07/2021
NOLL & TAM JOB NUMBER	21630

REVISIONS
	DATE	DESCRIPTION

SHEET TITLE
FIRST FLOOR - EAST - CLASSROOM DRAWING STUDIO

SHEET NUMBER
S2.33.1

10/7/2021 12:37:27 PM BIM 360://S13-16009-00 DVC San Ramon Campus Expansion (INCR1)/S_DVCSR_EXPANSION_INCR1_R18.rvt

2 BOOKSTORE ENTRY CANOPY ROOF PLAN
1/4" = 1'-0"

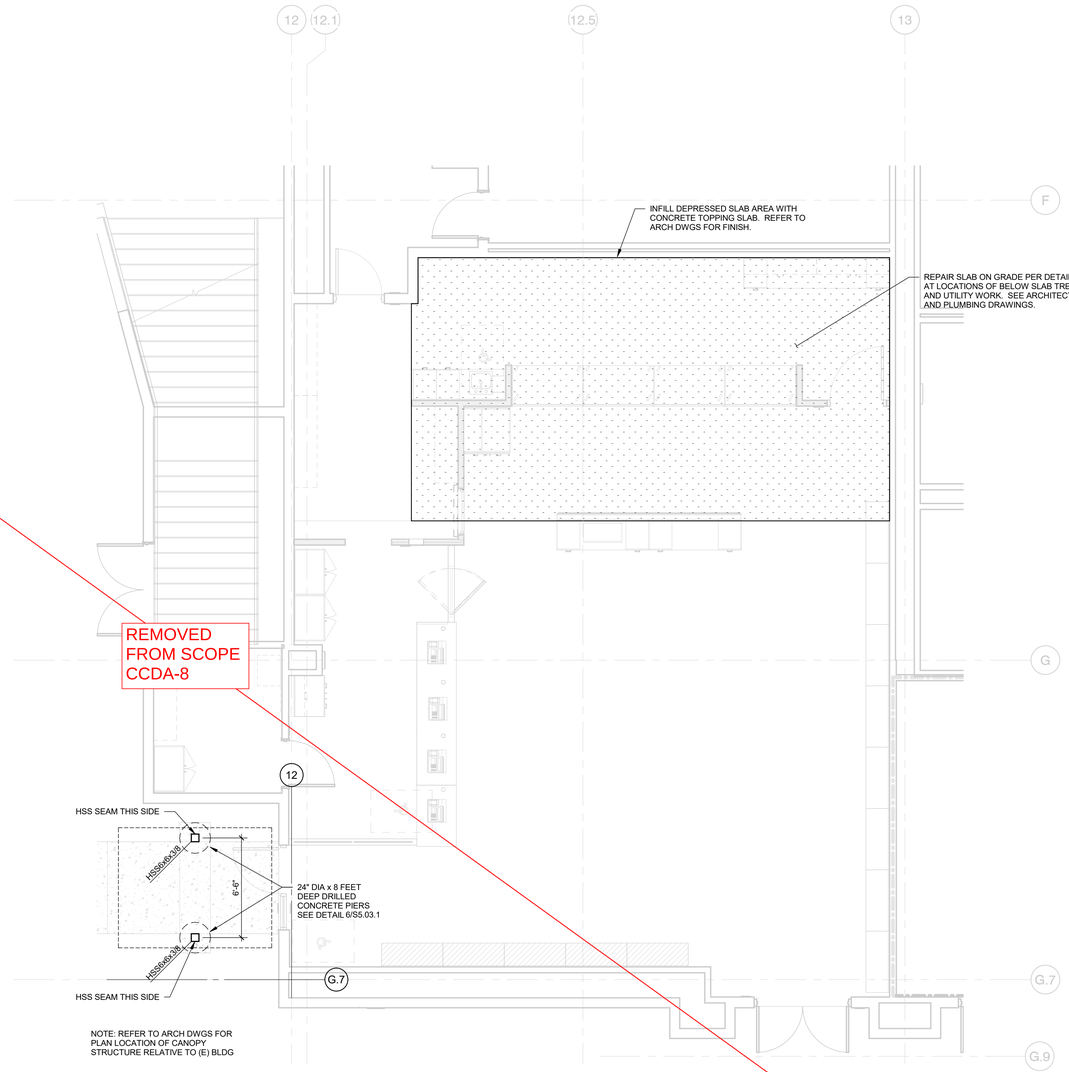

1 FIRST FLOOR - EAST - BOOKSTORE
1/4" = 1'-0"

NOLL & TAM ARCHITECTS
729 Heinz Avenue
Berkeley, CA 94710
tel 510.542.2200
fax 510.542.2201

SEAL

REGISTERED PROFESSIONAL ENGINEER
TANJEET JUNEJA
72676
CIVIL
STATE OF CALIFORNIA

APPROVALS
FILE NUMBER: 07-C1
DIVISION OF THE STATE ARCHITECT
APP# 01-117630
ACS_____FLS_____SSS_____
Date:

WALTER P MOORE

PROJECT TITLE
CONTRA COSTA CCD
D-4002
DVC SAN RAMON CAMPUS EXPANSION & RENOVATION
1690 Watermill Rd.
San Ramon, CA 94582

ISSUE TITLE
INCREMENT 1 - RENOVATION - FINAL

ISSUE DATE	10/07/2021
NOLL & TAM JOB NUMBER	21630

REVISIONS
	DATE	DESCRIPTION

SHEET TITLE
FIRST FLOOR - EAST - BOOKSTORE

SHEET NUMBER
S2.34.1

10/7/2021 12:37:30 PM BIM 360://S13-16009-00 DVC San Ramon Campus Expansion (INCR1)/S_DVCSR_EXPANSION_INCR1_R18.rvt

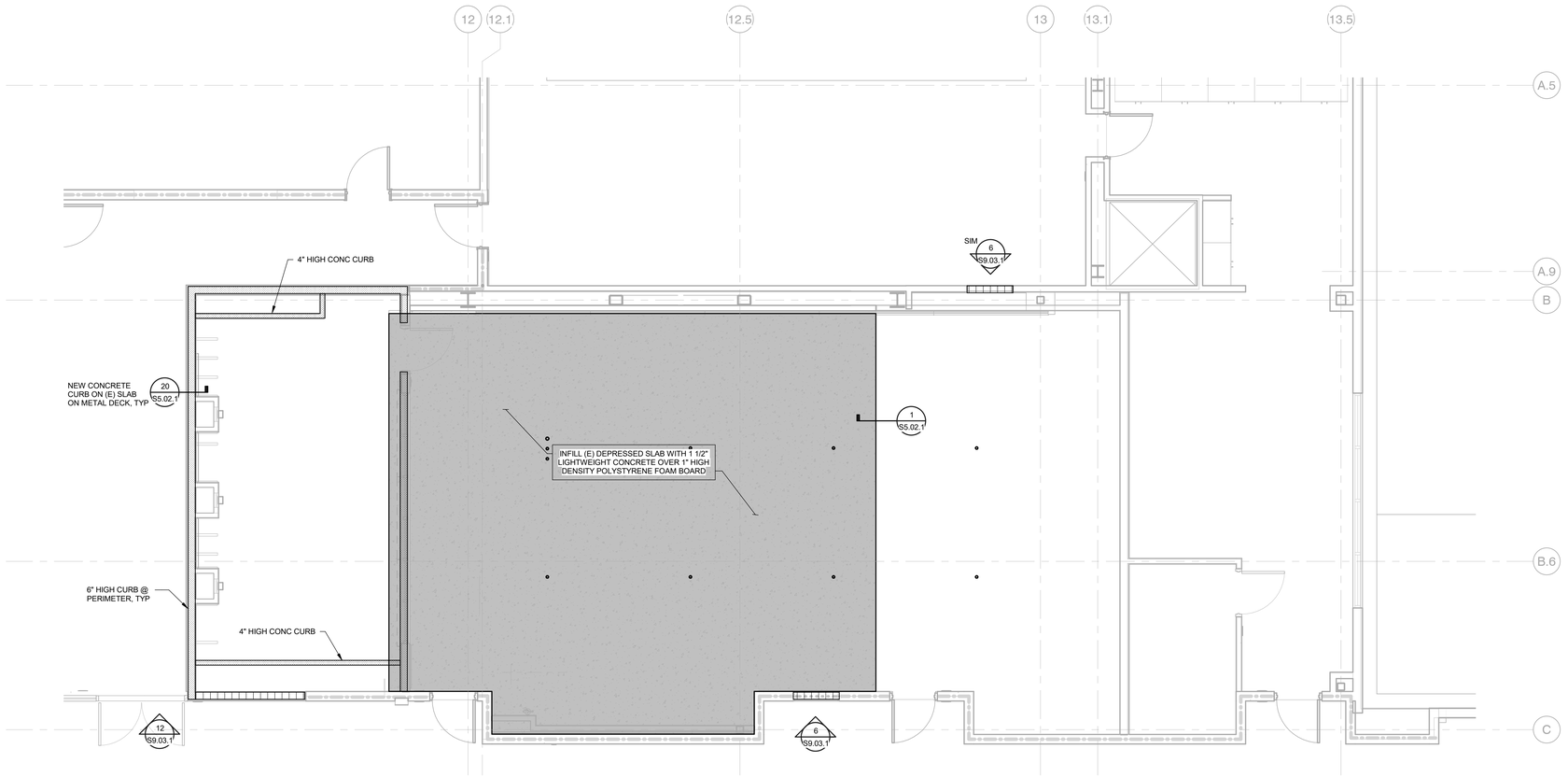

1 SECOND FLOOR - EAST - A&P LAB

1/4" = 1'-0"

NOLL & TAM ARCHITECTS

729 Heinz Avenue
Berkeley, CA 94710
tel 510.542.2200
fax 510.542.2201

SEAL

REGISTERED PROFESSIONAL ENGINEER
TANJEET JUNEJA
72676
CIVIL
STATE OF CALIFORNIA

APPROVALS

FILE NUMBER: 07-C1

DIVISION OF THE STATE ARCHITECT

APP# 01-117630

ACS_____ FLS_____ SSS_____

Date:

WALTER P MOORE

PROJECT TITLE

CONTRA COSTA CCD
D-4002
DVC SAN RAMON CAMPUS EXPANSION & RENOVATION

1690 Watermill Rd.
San Ramon, CA 94582

ISSUE TITLE

INCREMENT 1 - RENOVATION - FINAL

ISSUE DATE	10/07/2021
NOLL & TAM JOB NUMBER	21630

REVISIONS

#	DATE	DESCRIPTION

SHEET TITLE

SECOND FLOOR - EAST - A&P LAB

SHEET NUMBER

S2.37.1

10/7/2021 12:37:31 PM BIM 360://S13-16009-00 DVC San Ramon Campus Expansion (INCR1)/S_DVCSR_EXPANSION_INCR1_R18.rvt

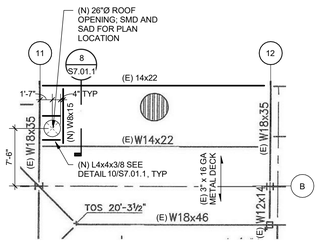

NOTES:
1. INSTALL NEW FRAMING PRIOR TO CUTTING NEW DECK OPENING.
2. WHERE NEW BEAMS FRAME OPENING PARALLEL TO DECK RIBS, LOCATE BEAMS UNDER TROUGH OF DECK NEAREST OPENING.

3 PARTIAL ROOF FRAMING PLAN

1/8" = 1'-0"

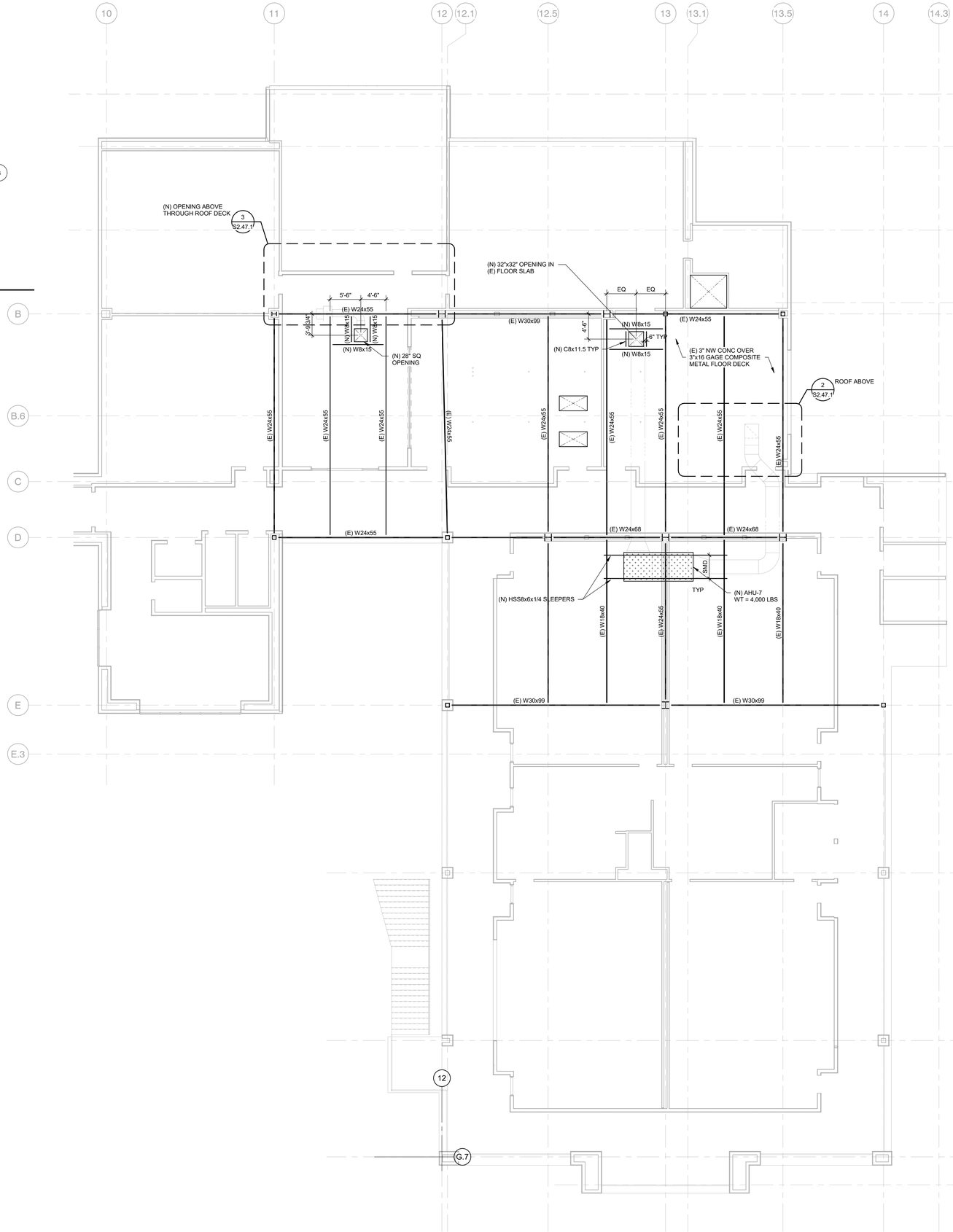

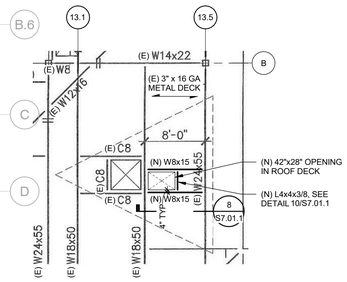

NOTES:
1. INSTALL NEW FRAMING PRIOR TO CUTTING NEW DECK OPENING.
2. WHERE NEW BEAMS FRAME OPENING PARALLEL TO DECK RIBS, LOCATE BEAMS UNDER TROUGH OF DECK NEAREST OPENING.

2 PARTIAL ROOF FRAMING PLAN

1/8" = 1'-0"

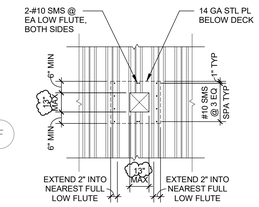

NOTE: OPENINGS 6" DIAMETER AND LESS WHICH CUT ONE DECK RIB DO NOT REQUIRE REINFORCEMENT

4 TYPICAL SMALL OPENING IN ROOF DECK

3/4" = 1'-0"

1 PENTHOUSE FLOOR PLAN - EAST - MECHANICAL

1/8" = 1'-0"

NOLL & TAM ARCHITECTS
729 Heinz Avenue
Berkeley, CA 94710
tel 510.542.2200
fax 510.542.2201

SEAL

REGISTERED PROFESSIONAL ENGINEER TANJEET JUNEJA 72676 CIVIL STATE OF CALIFORNIA

APPROVALS

FILE NUMBER: 07-C1

DIVISION OF THE STATE ARCHITECT
APP# 01-117630
ACS_____ FLS_____ SSS_____
Date:

WALTER P MOORE

PROJECT TITLE

CONTRA COSTA CCD
D-4002
DVC SAN RAMON CAMPUS EXPANSION & RENOVATION

1690 Watermill Rd.
San Ramon, CA 94582

ISSUE TITLE
INCREMENT 1 - RENOVATION - FINAL

ISSUE DATE	10/07/2021
NOLL & TAM JOB NUMBER	21630

REVISIONS

	DATE	DESCRIPTION
3	01-31-2019	ADDENDUM #3
	10-30-2019	CCDA-22

SHEET TITLE
ATTIC FLOOR - EAST - MECHANICAL

SHEET NUMBER
S2.47.1

10/7/2021 12:37:32 PM BIM 360://S13-16009-00 DVC San Ramon Campus Expansion (INCR1)/S_DVCSR_EXPANSION_INCR1_R18.rvt

CLASSES OF CONCRETE MATRIX							
CONCRETE USAGE	MINIMUM COMPRESSIVE STRENGTH (f'c)	CONCRETE TYPE	EXPOSURE CLASSES	MAXIMUM W/ CM RATIO	PERMISSIBLE AIR CONTENT	REQUIRED CEMENT REPLACEMENT	MAXIMUM AGGREGATE SIZE
FOUNDATIONS							
FOOTINGS, DRILLED PIERS	4,000 PSI AT 28 DAYS	NWC	-	N/A	N/A	15-25%	1-1/2"
SLABS-ON-GRADE							
BUILDING SLABS-ON-GRADE	3,000 PSI AT 28 DAYS	NWC	-	0.45	N/A	15-25%	3/4"
INTERIOR TOPPING SLAB	3,000 PSI AT 28 DAYS	LWC AT 2ND FLR NWC AT SLAB ON GROUND	-	0.45	N/A	NONE	3/8"

NOTES:
1. ALL CONCRETE SHALL BE CONSIDERED TO BE IN EXPOSURE CLASS F0, S0, P0, AND C0 ACCORDING TO ACI 318-08 UNLESS NOTED OTHERWISE IN TABLE ABOVE, IN NOTES BELOW, OR ELSEWHERE ON THE STRUCTURAL DRAWINGS.
2. CONCRETE NOTED ABOVE OR ON PLAN TO BE IN EXPOSURE CLASSES F1, F2, F3, S1, S2, S3, P1, C1, OR C2 SHALL BE PROPORTIONED TO COMPLY WITH ACI 318-08 TABLES 4.3.1, 4.4.1, AND 4.4.2 IN ADDITION TO THE NOTATIONS IN THE TABLE ABOVE AND THE STRICTER REQUIREMENTS SHALL GOVERN. REFER TO THE SPECIFICATIONS FOR OTHER REQUIREMENTS FOR VARIOUS EXPOSURE CLASSES RELATIVE TO CEMENT TYPE, AIR ENTRAINMENT REQUIREMENTS, CHLORIDE ION LIMITS, AND POZZOLAN LIMITS.
3. WHERE INDICATED IN THE "ADDITIONAL REMARKS" COLUMN OF THE TABLE ABOVE, CONCRETE SHALL BE PROPORTIONED FOR A MAXIMUM ALLOWABLE UNIT SHRINKAGE OF 0.035% MEASURED AT 28 DAYS AFTER CURING IN LIME WATER AS DETERMINED BY ASTM C157, USING AIR STORAGE.

4 CLASSES OF CONCRETE MATRIX
NO SCALE

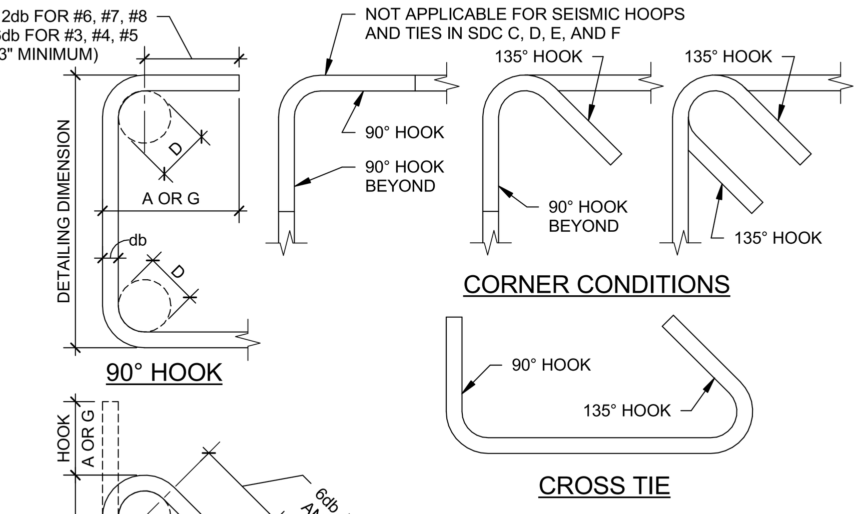

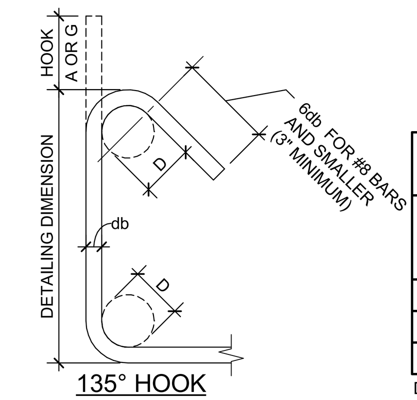

HOOK DIMENSIONS			
BAR SIZE	D (INCHES)	90° HOOK A OR G (INCHES)	135° HOOK A OR G (INCHES)
#3	1 1/2	4	4 1/4
#4	2	4 1/2	4 1/2
#5	2 1/2	6	5 1/2

D = INSIDE DIAMETER OF BEND

2 TYPICAL STIRRUP, HOOP, AND TIE HOOKS
NO SCALE

03210-CL-REBAR-01A
© COPYRIGHT WALTER P. MOORE AND ASSOCIATES, INC. 2017

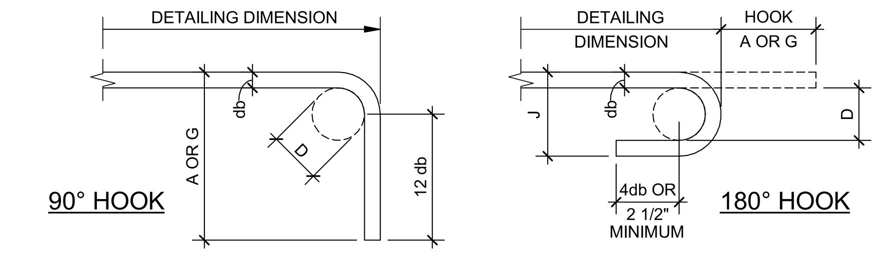

END HOOK DIMENSIONS				
BAR SIZE	FINISHED BEND DIAMETER D, (INCHES)	180° HOOKS		90° HOOK
		A OR G, (INCHES)	J, (INCHES)	A OR G, (INCHES)
#3	2 1/4	5	3	6
#4	3	6	4	8
#5	3 3/4	7	5	10
#6	4 1/2	8	6	12
#7	5 1/4	10	7	14
#8	6	11	8	16
#9	9 1/2	15	11 3/4	19
#10	10 3/4	17	13 1/4	22
#11	12	19	14 3/4	24
#14	18 1/4	27	21 3/4	31
#18	24	36	28 1/2	41

D = INSIDE DIAMETER OF BEND

1 TYPICAL END HOOK TYPES
NO SCALE

03210-CL-REBAR-02
© COPYRIGHT WALTER P. MOORE AND ASSOCIATES, INC. 2010

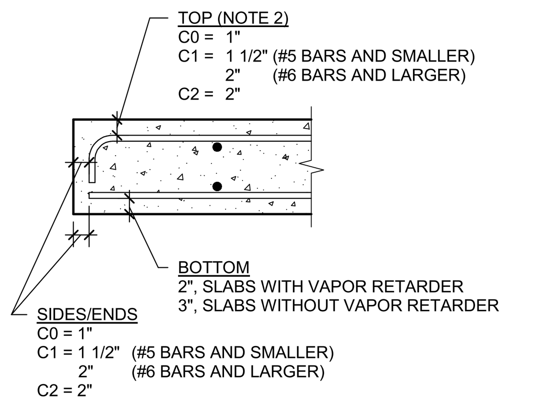

NOTES:
1. CONCRETE PROFILES AND REINFORCING STEEL CONFIGURATIONS ARE SCHEMATIC AND ARE PROVIDED FOR ESTABLISHING TYPICAL CLEAR CONCRETE COVERS ONLY. REFER TO STRUCTURAL PLANS AND DETAILS FOR ALL OTHER INFORMATION.
2. ALL COVERS SHOWN ARE CLEAR FROM THE OUTERMOST SURFACE OF REINFORCING STEEL TO THE CLOSEST OUTER SURFACE OF THE CONCRETE, INCLUDING REVEALS, DRIP GROOVES, OR RUSTICATIONS.
3. WHERE COVERS ARE DIFFERENT AS A FUNCTION OF BAR SIZE, DETAILER SHALL ADJUST LOCATION OF TRANSVERSE REINFORCING STEEL AS REQUIRED SUCH THAT CLEAR COVERS ARE MET FOR BOTH TRANSVERSE AND LONGITUDINAL STEEL.
4. C0, C1, AND C2 REFER TO THE CORROSION EXPOSURE CLASS OF THE CONCRETE ELEMENT. REFER TO THE CLASSES OF CONCRETE MATRIX AND GENERAL NOTES FOR ADDITIONAL INFORMATION.
5. REFER TO "TYPICAL CONSTRUCTION AND CONTROL JOINTS IN SLAB-ON-GRADE" FOR MORE STRINGENT TOP COVER REQUIREMENTS FOR SLABS-ON-GRADE WITH CONSTRUCTION OR CONTROL JOINTS.

9 TYPICAL CLEAR CONCRETE COVER FOR REINFORCING STEEL IN SLABS-ON-GRADE
NO SCALE

03200-FL-COVER-01
© COPYRIGHT WALTER P. MOORE AND ASSOCIATES, INC. 2016

DEVELOPMENT LENGTHS OF STANDARD HOOKS IN TENSION GRADE 60 REINFORCEMENT, NORMALWEIGHT CONCRETE													
BAR SIZE	f'c=3000 PSI		f'c=4000 PSI		f'c=5000 PSI								BAR SIZE
	Lhb	0.7 Lhb	Lhb	0.7 Lhb	Lhb	0.7 Lhb							
#3	9	7	8	6	7	6							#3
#4	11	8	10	7	9	7							#4
#5	14	10	12	9	11	8							#5
#6	17	12	15	11	13	10							#6
#7	20	14	17	12	15	11							#7
#8	22	16	19	14	17	12							#8
#9	25	18	22	16	20	14							#9
#10	28	20	25	18	22	16							#10
#11	31	22	27	19	24	17							#11
#14	38	-	33	-	29	-							#14
#18	50	-	43	-	39	-							#18

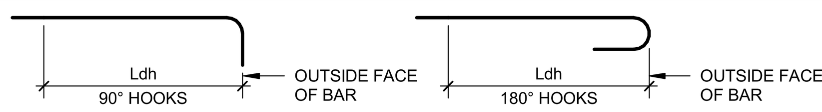

NOTES:
1. Ldh = DEVELOPMENT LENGTH OF STANDARD HOOKS IN TENSION (INCHES).
2. Ldh = Lhb UNLESS CONDITIONS OF NOTE 3 ARE SATISFIED.
3. Ldh = 0.7Lhb FOR #11 BARS AND SMALLER WHEN SIDE COVER (NORMAL TO PLANE OF HOOK) IS NOT LESS THAN 2 1/2 INCHES AND FOR 90° HOOKS COVER ON BAR EXTENSION BEYOND HOOK IS NOT LESS THAN 2 INCHES.
4. HOOKS ARE NOT CONSIDERED EFFECTIVE FOR DEVELOPING BARS IN COMPRESSION.

8 TYPICAL DEVELOPMENT LENGTHS OF STANDARD HOOKS IN TENSION
NO SCALE

00860-CN-DELHK-01
© COPYRIGHT WALTER P. MOORE AND ASSOCIATES, INC. 2009

SLAB TENSION DEVELOPMENT AND LAP SPLICE LENGTHS GRADE 60 REINFORCEMENT, NORMALWEIGHT CONCRETE							
BAR SIZE	LAP CLASS	f'c = 3000 PSI		f'c = 4000 PSI		f'c = 5000 PSI	
		BOTTOM BARS	OTHER BARS	BOTTOM BARS	OTHER BARS	BOTTOM BARS	OTHER BARS
#3	A	12	13	12	12	12	12
	B	16	17	16	16	16	16
#4	A	17	22	15	19	13	17
	B	23	29	20	25	17	23
#5	A	25	32	21	28	19	25
	B	33	42	28	37	25	33
#6	A	33	43	29	37	26	34
	B	43	56	38	49	34	45
#7	A	53	69	46	60	42	54
	B	69	90	60	78	55	71
#8	A	66	86	57	74	51	67
	B	86	112	75	97	67	88
#9	A	80	104	69	90	62	81
	B	104	136	90	117	81	106
#10	A	96	125	83	108	75	97
	B	125	163	108	141	98	127
#11	A	113	146	98	127	87	114
	B	147	190	128	166	114	149

NOTES:
1. ALL SPLICE LENGTHS ARE IN INCHES.
2. THE TENSION DEVELOPMENT LENGTH (Ld) IS EQUAL TO THE SCHEDULED "CLASS A" LAP SPLICE LENGTH.
3. A BOTTOM BAR IS DEFINED AS ANY BAR THAT DOES NOT HAVE MORE THAN 12" OF FRESH CONCRETE BELOW THE BAR.
4. OTHER BARS INCLUDE TOP BARS AND ALL OTHER BARS THAT HAVE MORE THAN 12" OF FRESH CONCRETE BELOW THE BAR. FOR TOP REINFORCEMENT IN SLABS THAT ARE 12" THICK OR LESS, TABULATED SPLICE LENGTHS FOR BOTTOM BARS SHALL BE USED.
5. WHEN LAP SPLICING BARS OF DIFFERENT SIZES, THE LAP LENGTH IS DETERMINED BY THE SMALLER BAR BUT MAY NOT BE LESS THAN THE "CLASS A" SPLICE LENGTH OF THE LARGER BAR.
6. FOR CONCRETE STRENGTHS IN BETWEEN THOSE TABULATED HERE, USE DEVELOPMENT AND LAP SPLICE LENGTHS OF LOWER CONCRETE STRENGTH.

7 TYPICAL SLAB TENSION DEVELOPMENT AND LAP SPLICE LENGTHS
NO SCALE

00860-FL-DELSP-03
© COPYRIGHT WALTER P. MOORE AND ASSOCIATES, INC. 2014

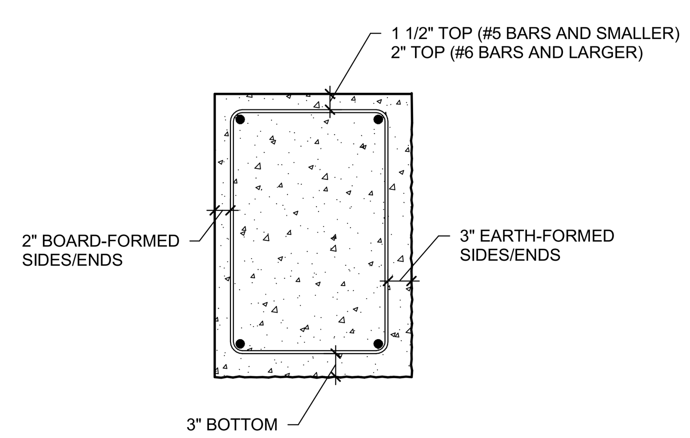

NOTES:
1. CONCRETE PROFILES AND REINFORCING STEEL CONFIGURATIONS ARE SCHEMATIC AND ARE PROVIDED FOR ESTABLISHING TYPICAL CLEAR CONCRETE COVERS ONLY. REFER TO STRUCTURAL PLANS AND DETAILS FOR ALL OTHER INFORMATION.
2. ALL COVERS SHOWN ARE CLEAR FROM THE OUTERMOST SURFACE OF REINFORCING STEEL TO THE CLOSEST OUTER SURFACE OF THE CONCRETE, INCLUDING REVEALS, DRIP GROOVES, OR RUSTICATIONS.
3. WHERE COVERS ARE DIFFERENT AS A FUNCTION OF BAR SIZE, DETAILER SHALL ADJUST LOCATION OF TRANSVERSE REINFORCING STEEL AS REQUIRED SUCH THAT CLEAR COVERS ARE MET FOR BOTH TRANSVERSE AND LONGITUDINAL STEEL.
4. C0, C1, AND C2 REFER TO THE CORROSION EXPOSURE CLASS OF THE CONCRETE ELEMENT. REFER TO THE CLASSES OF CONCRETE MATRIX AND GENERAL NOTES FOR ADDITIONAL INFORMATION.

14 TYPICAL CLEAR CONCRETE COVER FOR REINFORCING STEEL IN GRADE BEAMS
NO SCALE

03200-FN-COVER-15
© COPYRIGHT WALTER P. MOORE AND ASSOCIATES, INC. 2010

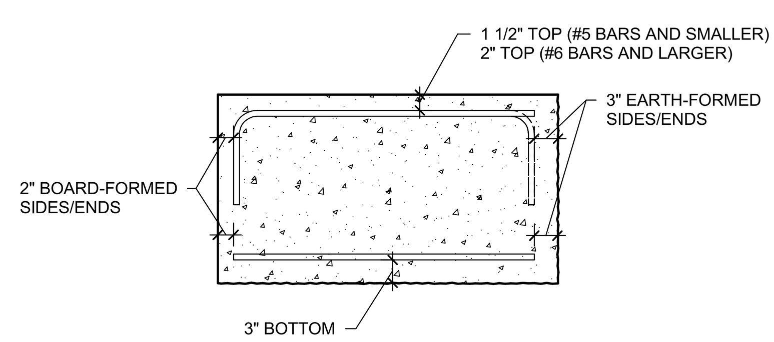

NOTES:
1. CONCRETE PROFILES AND REINFORCING STEEL CONFIGURATIONS ARE SCHEMATIC AND ARE PROVIDED FOR ESTABLISHING TYPICAL CLEAR CONCRETE COVERS ONLY. REFER TO STRUCTURAL PLANS AND DETAILS FOR ALL OTHER INFORMATION.
2. ALL COVERS SHOWN ARE CLEAR FROM THE OUTERMOST SURFACE OF REINFORCING STEEL TO THE CLOSEST OUTER SURFACE OF THE CONCRETE, INCLUDING REVEALS, DRIP GROOVES, OR RUSTICATIONS.
3. WHERE COVERS ARE DIFFERENT AS A FUNCTION OF BAR SIZE, DETAILER SHALL ADJUST LOCATION OF TRANSVERSE REINFORCING STEEL AS REQUIRED SUCH THAT CLEAR COVERS ARE MET FOR BOTH TRANSVERSE AND LONGITUDINAL STEEL.
4. C0, C1, AND C2 REFER TO THE CORROSION EXPOSURE CLASS OF THE CONCRETE ELEMENT. REFER TO THE CLASSES OF CONCRETE MATRIX AND GENERAL NOTES FOR ADDITIONAL INFORMATION.

13 TYPICAL CLEAR CONCRETE COVER FOR REINFORCING STEEL IN SPREAD FOOTINGS
NO SCALE

03200-FN-COVER-14
© COPYRIGHT WALTER P. MOORE AND ASSOCIATES, INC. 2010

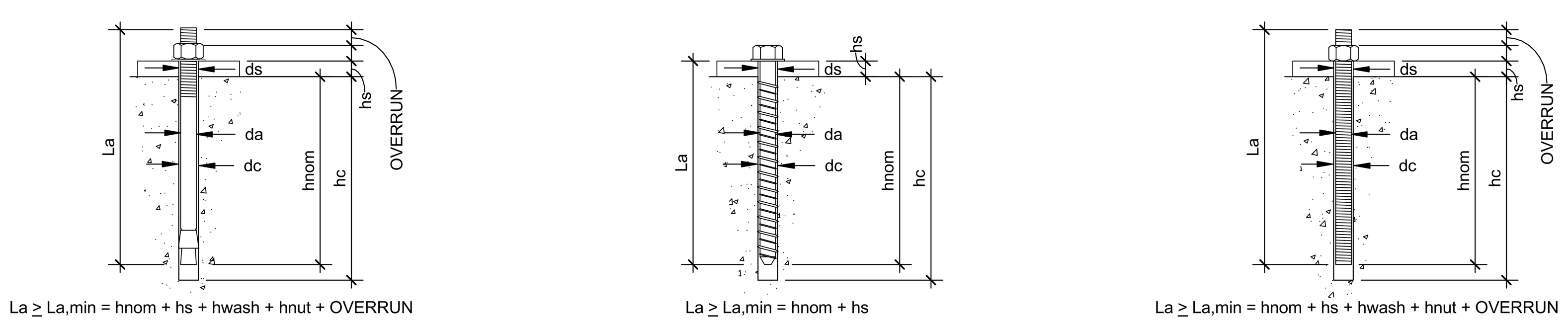

La ≥ La,min = hnom + hs + hwash + hnut + OVERRUN
EXPANSION AND UNDERCUT

La ≥ La,min = hnom + hs
SCREW

La ≥ La,min = hnom + hs + hwash + hnut + OVERRUN
ADHESIVE

ANCHOR SIZE FOR ORDER:	"da" DIAMETER x "La" ANCHOR LENGTH
DRILLED HOLE:	"dc" DIAMETER x "hc" DEEP

DEFINITIONS:

da = DIAMETER OF ANCHOR (IN)
dc = DIAMETER OF HOLE IN CONCRETE = DIAMETER OF DRILL BIT (IN)
ds = DIAMETER OF HOLE IN STEEL ATTACHMENT (IN)

La,min = MINIMUM LENGTH OF ANCHOR (IN)
La = ORDERED LENGTH OF ANCHOR (IN)

hnom = NOMINAL EMBEDMENT DEPTH (IN)
hc = DEPTH OF HOLE IN CONCRETE (IN)
hs = THICKNESS OF STEEL ATTACHMENT (IN)
hwash = THICKNESS OF WASHER (IN)
hnut = HEIGHT OF HEX NUT (IN)
OVERRUN =1/4" UNLESS NOTED OTHERWISE

CONTRACTOR AND INSTALLER NOTES:
1. ONLY POST-INSTALLED ANCHOR PRODUCTS SPECIFIED IN THE CONTRACT DOCUMENTS SHALL BE USED WHERE SPECIFIED IN THE CONTRACT DOCUMENTS. THE CONTRACTOR SHALL PROVIDE SIGNED AND SEALED CALCULATIONS TO THE ENGINEER OF RECORD (EOR) FOR ANCHOR PRODUCTS SUBSTITUTED FOR THOSE INDICATED IN THE CONTRACT DOCUMENTS. THE CONTRACTOR SHALL OBTAIN APPROVAL FROM THE EOR PRIOR TO USING POST-INSTALLED ANCHORS FOR MISSING OR MISPLACED CAST-IN ANCHORS AND REINFORCEMENT.
2. ANCHOR LENGTHS SPECIFIED IN THE CONTRACT DOCUMENTS INDICATE THE *NOMINAL EMBEDMENT DEPTH*. REFER TO THE ANCHOR TYPE FOR THE DEFINITION OF NOMINAL EMBEDMENT DEPTH "hnom". IT IS THE RESPONSIBILITY OF THE CONTRACTOR TO DETERMINE THE CORRECT ANCHOR LENGTH "La" FOR ORDER BASED ON THE SPECIFIED NOMINAL EMBEDMENT DEPTH, ATTACHMENT THICKNESS AND OTHER ANCHOR CHARACTERISTICS NOTED.
3. MINIMUM ANCHOR LENGTH "La,min" IS DETERMINED AS SHOWN FOR EACH ANCHOR. ORDER AND INSTALL AN ANCHOR LENGTH EQUAL TO OR GREATER THAN THIS VALUE. INSTALLED ANCHOR LENGTHS SHALL NOT HAVE NOMINAL EMBEDMENT DEPTHS THAT EXCEED THEIR CORRESPONDING MINIMUM CONCRETE THICKNESS LIMITS. REFER TO ANCHOR'S ICC-ES EVALUATION SERVICE REPORT (ESR).
4. REFER TO THE ANCHOR'S ICC-ES EVALUATION SERVICE REPORT (ESR) FOR DRILL BIT TYPE AND DIAMETER, AND DEPTH OF HOLE TO BE DRILLED IN THE CONCRETE.
5. FOLLOW THE MANUFACTURER'S PRINTED INSTALLATION INSTRUCTIONS (MPII).
6. ALL DRILLED HOLES FOR ADHESIVE ANCHORS SHALL BE WITHIN SIX DEGREES OF PERPENDICULAR TO THE SURFACE OF THE CONCRETE MEMBER.
7. REFER TO THE POST-INSTALLED ANCHOR NOTES ON S0.01 GENERAL STRUCTURAL NOTES FOR ADDITIONAL INFORMATION, INCLUDING TESTS AND INSPECTIONS.

20 TYPICAL POST-INSTALLED ANCHOR INFORMATION
NO SCALE

05500-CN-PIANC-01
© COPYRIGHT WALTER P. MOORE AND ASSOCIATES, INC. 2017

DEVELOPMENT LENGTHS OF STANDARD HOOKS IN TENSION GRADE 60 REINFORCEMENT, LIGHTWEIGHT CONCRETE													
BAR SIZE	f'c=3000 PSI		f'c=4000 PSI		f'c=5000 PSI		f'c=6000 PSI		f'c=7000 PSI		f'c=8000 PSI		BAR SIZE
	Lhb	0.7 Lhb	Lhb	0.7 Lhb	Lhb	0.7 Lhb	Lhb	0.7 Lhb	Lhb	0.7 Lhb	Lhb	0.7 Lhb	
#3	11	8	10	7	9	7	8	6	8	6	7	6	#3
#4	15	11	13	10	12	9	11	8	10	7	9	7	#4
#5	19	14	16	12	15	11	13	10	12	9	12	9	#5
#6	22	16	19	14	17	12	16	12	15	11	14	10	#6
#7	26	19	23	17	20	14	19	14	17	12	16	12	#7
#8	30	21	26	19	23	17	21	15	20	14	18	13	#8
#9	33	24	29	21	26	19	24	17	22	16	21	15	#9
#10	38	27	33	24	29	21	27	19	25	18	23	17	#10
#11	42	30	36	26	32	23	30	21	27	19	26	19	#11
#14	50	-	43	-	39	-	35	-	33	-	31	-	#14
#18	66	-	58	-	52	-	47	-	44	-	41	-	#18

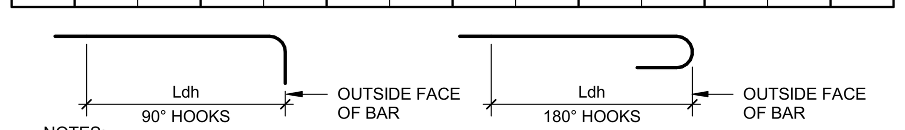

NOTES:
1. Ldh = DEVELOPMENT LENGTH OF STANDARD HOOKS IN TENSION (INCHES).
2. Ldh = Lhb UNLESS CONDITIONS OF NOTE 3 ARE SATISFIED.
3. Ldh = 0.7Lhb FOR #11 BARS AND SMALLER WHEN SIDE COVER (NORMAL TO PLANE OF HOOK) IS NOT LESS THAN 2 1/2 INCHES AND FOR 90° HOOKS COVER ON BAR EXTENSION BEYOND HOOK IS NOT LESS THAN 2 INCHES.
4. HOOKS ARE NOT CONSIDERED EFFECTIVE FOR DEVELOPING BARS IN COMPRESSION.
5. Ldh SHALL BE MULTIPLIED BY 1.2 FOR EPOXY-COATED HOOKED REINFORCING BARS.

18 TYPICAL DEVELOPMENT LENGTHS OF STANDARD HOOKS IN TENSION
NO SCALE

00860-CN-DELHK-02
© COPYRIGHT WALTER P. MOORE AND ASSOCIATES, INC. 2009

NOLL & TAM ARCHITECTS
729 Heinz Avenue
Berkeley, CA 94710
tel 510.542.2200
fax 510.542.2201

SEAL

APPROVALS
FILE NUMBER: 07-C1
DIVISION OF THE STATE ARCHITECT
APP# 01-117630
ACS________FLS________SSS________
Date:

WALTER P MOORE

PROJECT TITLE
CONTRA COSTA CCD
D-4002
DVC SAN RAMON CAMPUS EXPANSION & RENOVATION

1690 Watermill Rd.
San Ramon, CA 94582

ISSUE TITLE
INCREMENT 1 - RENOVATION - FINAL

ISSUE DATE	10/07/2021
NOLL & TAM JOB NUMBER	21630

REVISIONS
| DATE | DESCRIPTION

SHEET TITLE
TYPICAL CONCRETE REINFORCEMENT DETAILS

SHEET NUMBER
S5.01.1

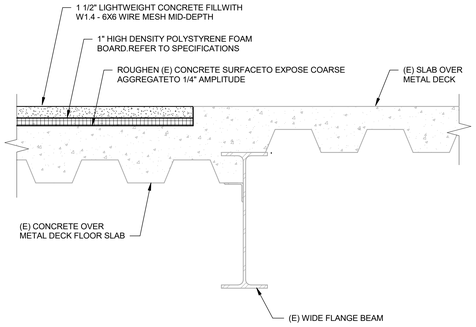

1 SLAB INFILL DETAIL

NO SCALE

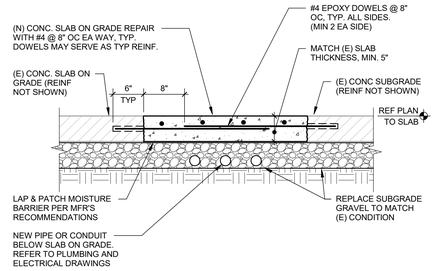

6 REPAIR OF (E) SLAB-ON-GRADE

NO SCALE

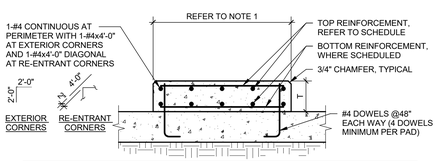

HOUSEKEEPING PAD REINFORCEMENT SCHEDULE		
PAD THICKNESS	TOP REINFORCEMENT	BOTTOM REINFORCEMENT
T = 4"	WWR4x4-W2.9xW2.9 OR #3@12" EACH WAY	NONE
4" < T <= 6"	WWR4x4-W4xW4 OR #4@18" EACH WAY	NONE
6" < T <= 8"	WWR4x4-W6xW6 OR #4@12" EACH WAY	NONE
8" < T <= 12"	#4@18" EACH WAY	#4@18" EACH WAY
12" < T <= 16"	#4@12" EACH WAY	#4@12" EACH WAY

NOTES:
1. REFER TO ARCHITECTURAL, STRUCTURAL, OR MEP DRAWINGS FOR HOUSEKEEPING PAD PLAN DIMENSIONS AND THICKNESS (4" MINIMUM THICKNESS).
2. CONTRACTOR SHALL COORDINATE DIMENSIONS AND OTHER SPECIAL REQUIREMENTS WITH EQUIPMENT MANUFACTURERS AND PROVIDE WHERE REQUIRED WHETHER SHOWN ON STRUCTURAL DRAWINGS OR NOT.

14 TYPICAL HOUSEKEEPING PAD OVER SLAB-ON-GRADE

NO SCALE

H:\NOLL-SC-DOCS.rvt
© COPYRIGHT WALTER P. MOORE AND ASSOCIATES, INC., 2015

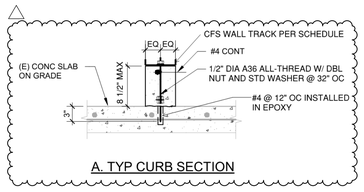

A. TYP CURB SECTION

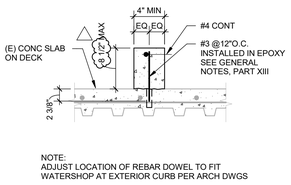

NOTE:
ADJUST LOCATION OF REBAR DOWEL TO FIT WATERSHOP AT EXTERIOR CURB PER ARCH DWGS

20 TYPICAL NEW CURBS ON EXISTING CONCRETE OVER METAL DECK SLAB

1" = 1'-0"

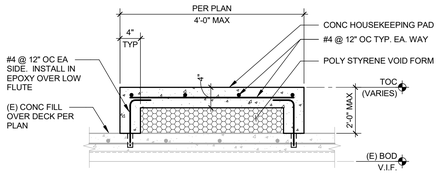

19 HOUSEKEEPING PAD ON (E) SLAB OVER DECK

1" = 1'-0"

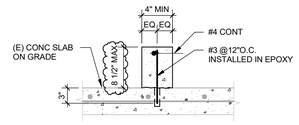

A. TYP CURB SECTION

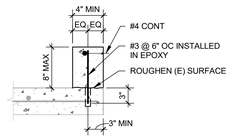

B. EDGE CURB SECTION

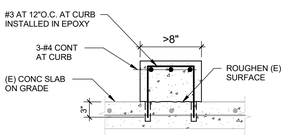

D. WIDE CURB SECTION

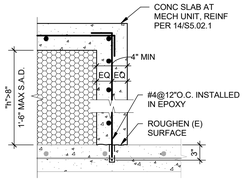

C. PAD SECTION

NOTES:
1. SEE ARCHITECTURAL FOR DIMENSIONS, DETAILS AND INFORMATION NOT SHOWN OR NOTED.
2. WHERE EXPANSION ANCHORS ARE TO BE INSTALLED, THE MINIMUM CURB THICKNESS SHALL BE 6".

18 TYPICAL CURBS ON EXISTING SLAB ON GRADE

1" = 1'-0"

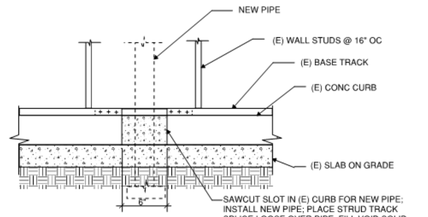

SECTION

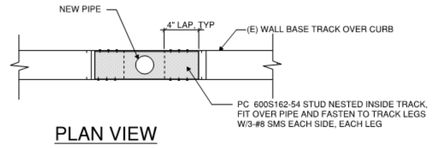

PLAN VIEW

15 CURB NOTCH FOR PLUMBING

1" = 1'-0"

NOLL & TAM ARCHITECTS
729 Heinz Avenue
Berkeley, CA 94710
tel 510.542.2200
fax 510.542.2201

SEAL

REGISTERED PROFESSIONAL ENGINEER
TANJEET JUNEJA
72676
CIVIL
STATE OF CALIFORNIA

APPROVALS

FILE NUMBER: 07-C1

DIVISION OF THE STATE ARCHITECT
APP# 01-117630
ACS_____ FLS_____ SSS_____
Date:

WALTER P MOORE

PROJECT TITLE

CONTRA COSTA CCD
D-4002
DVC SAN RAMON CAMPUS EXPANSION & RENOVATION

1690 Watermill Rd.
San Ramon, CA 94582

ISSUE TITLE
INCREMENT 1 - RENOVATION - FINAL

ISSUE DATE	10/07/2021
NOLL & TAM JOB NUMBER	21630

REVISIONS

	DATE	DESCRIPTION
2	TBD	CCD
1	TBD	AS-BUILT SET

SHEET TITLE
TYPICAL CONCRETE SLAB DETAILS

SHEET NUMBER
S5.02.1

10/7/2021 12:37:38 PM BIM 360://S13-16000-00 DVC San Ramon Campus Expansion (INCR1)\S_DVCSR_EXPANSION_INCR1_R18.rvt

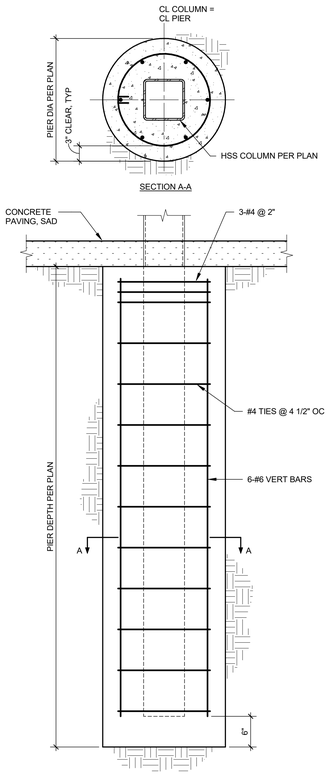

6 ENTRY CANOPY PIER FOOTING
1" = 1'-0"

REMOVED
FROM SCOPE
CCDA-8

10/7/2021 12:37:38 PM BIM 360://S13-16009-00 DVC San Ramon Campus Expansion (INCR1)/S_DVCSR_EXPANSION_INCR1_R18.rvt

NOLL & TAM ARCHITECTS

729 Heinz Avenue
Berkeley, CA 94710
tel 510.542.2200
fax 510.542.2201

SEAL

REGISTERED PROFESSIONAL ENGINEER
TANJEET JUNEJA
72676
CIVIL
STATE OF CALIFORNIA

APPROVALS

FILE NUMBER: 07-C1

DIVISION OF THE STATE ARCHITECT

APP# 01-117630

ACS_____FLS_____SSS_____
Date:

WALTER P MOORE

PROJECT TITLE

CONTRA COSTA CCD
D-4002
DVC SAN RAMON CAMPUS EXPANSION & RENOVATION

1690 Watermill Rd.
San Ramon, CA 94582

ISSUE TITLE
INCREMENT 1 - RENOVATION - FINAL

ISSUE DATE	10/07/2021
NOLL & TAM JOB NUMBER	21630

REVISIONS

	DATE	DESCRIPTION

SHEET TITLE
CONCRETE DETAILS

SHEET NUMBER
S5.03.1

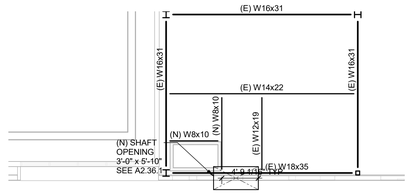

4 NEW SHAFT OPENING IN FLOOR SLAB AT ATTIC LEVEL

1/8" = 1'-0"

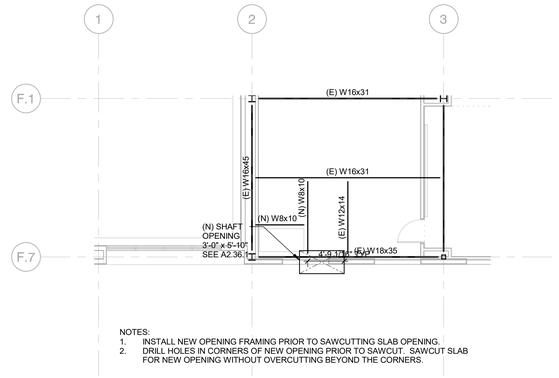

NOTES:
1. INSTALL NEW OPENING FRAMING PRIOR TO SAWCUTTING SLAB OPENING.
2. DRILL HOLES IN CORNERS OF NEW OPENING PRIOR TO SAWCUT. SAWCUT SLAB FOR NEW OPENING WITHOUT OVERCUTTING BEYOND THE CORNERS.

3 NEW SHAFT OPENING IN SECOND FLOOR SLAB

1/8" = 1'-0"

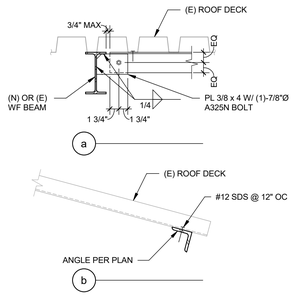

10 TYPICAL ANGLE SUPPORT AT NEW ROOF OPENING

1" = 1'-0"

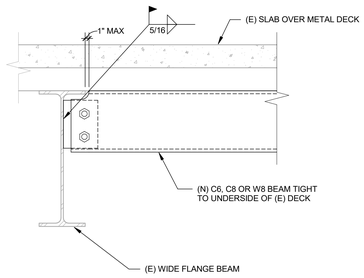

NOTE:
1. FOR INFORMATION NOT SHOWN, REFER TO DETAIL 7/S7.01.1
2. REMOVE AND PATCH FIRE PROOFING AS REQD TO INSTALL NEW WORK.

9 NEW STEEL BEAM TO EXISTING STEEL BEAM CONNECTION

1 1/2" = 1'-0"

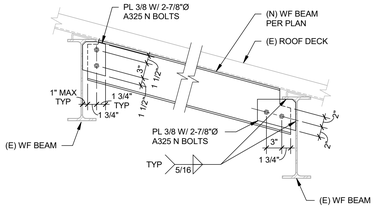

8 TYPICAL SLOPING BEAM CONNECTION

1" = 1'-0"

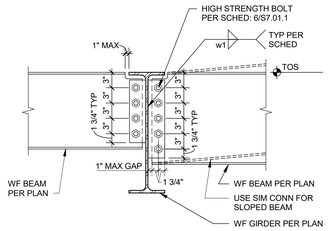

7 TYPICAL BEAM TO BEAM CONNECTIONS

1" = 1'-0"

SHEAR PLATE SCHEDULE - ONE COLUMN CONNECTION					
BEAM SIZE	QTY OF 7/8" DIA A325N BOLTS	SHEAR PL THICKNESS	WELD w1	WING PL THICKNESS	WELD w2
C8	2	0.375	0.25	0.625	0.4375
C10	2	0.375	0.25	0.625	0.4375
C12	3	0.375	0.25	0.625	0.4375
C15	3	0.375	0.25	0.625	0.4375
W8	2	0.375	0.25	0.625	0.4375
W10	2	0.375	0.25	0.625	0.4375
W12	3	0.375	0.25	0.625	0.4375

NOTES:
1. REFER TO GENERAL NOTES ON SHEETS S0.01.1 FOR ADDITIONAL INFORMATION.
2. ALL CONNECTIONS SHALL BE SHEAR PLATE CONNECTIONS WITH A SINGLE COLUMN OF BOLTS UNLESS DENOTED OTHERWISE ON PLAN. REFER TO DETAILS 7, 8, 9 AND 10 ON THIS SHEET.
3. REFER TO SHEET S0.03.1 FOR SYMBOLS DENOTING ALTERNATE CONNECTION TYPES.
4. ALL BOLTS SHALL BE SNUG TIGHT IN STANDARD HOLES, UNLESS OTHERWISE NOTED.

6 TYPICAL BEAM CONN SCHEDULE

NO SCALE

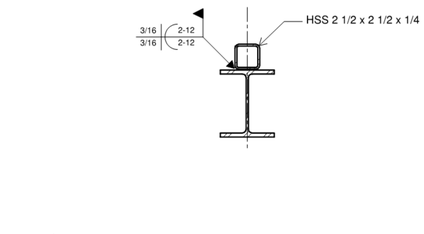

14 HSS SPACER DETAIL

NO SCALE

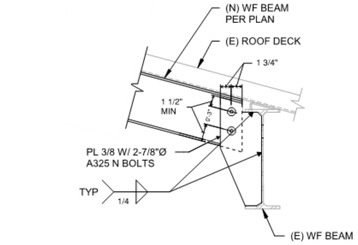

13 ALTERNATE SLOPING BEAM CONNECTION

NO SCALE

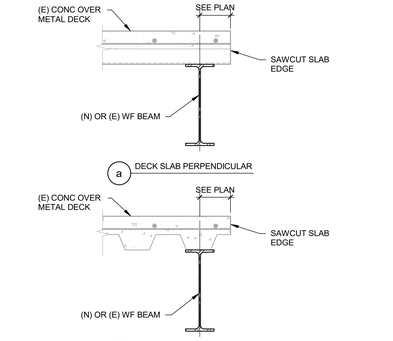

12 TYPICAL COMPOSITE DECK SLAB EDGE AT NEW OPENING

1" = 1'-0"

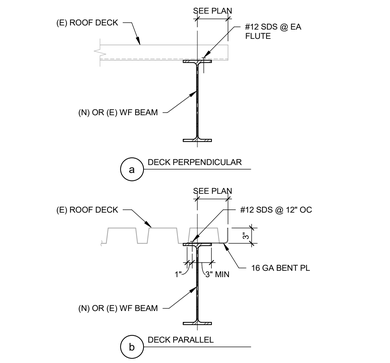

11 TYPICAL EDGE OF ROOF DECK AT NEW OPENINGS

1" = 1'-0"

1.	**Floor Assembly (2 Hr) -** Min 3-1/4" thick concrete over metal deck (max 3" deep flutes) floor assembly.
2.	**Wall Assembly (1 Hr) -** Gypsum board/steel stud shaft wall assembly (UL U400 Series Design). Max width of joint is 1".
3.	**Steel Plate -** Min 14 GA continuous galv steel plate. Plate welded to top of steel I-beam with welds spaced 24" OC.
4.	**Support Member -** Unprotected steel beam.
5.	**Forming Material -** Min 4 pcf density mineral wool batt insulation formed to the shape of the fluted floor units, friction fit to completely fill the flutes above the steel plate, flush with outer wall surface. Adjacent lengths of batts to be tightly butted with butted seams spaced a min 24" apart along the length of the plugs. Additional mineral wool batt insulation compressed a min 50% and installed within joint to full depth, flush with gypsum surfaces.
6.	**Spray -** SpecSeal® AS200 Spray applied to completely cover each installation of mineral wool to a min 1/8" wet thickness, overlapping onto surrounding substrates a min 1/2".

***Notes: 1 -** Rating of the firestop system is dependent on the performance of the surrounding construction under fire exposure with a max possible F rating of 1 Hr. **2 - T** rating may not equal F rating per UL2079.

19 ENGINEERING JUDGMENT FIRESTOP DETAIL

1" = 1'-0"

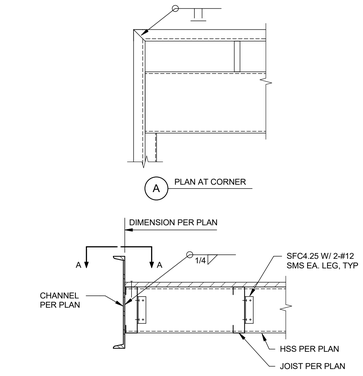

18 DETAIL

1 1/2" = 1'-0"

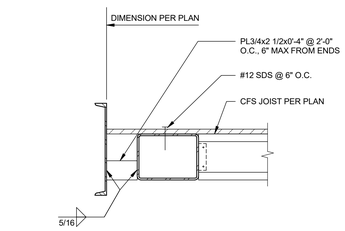

17 DETAIL

1 1/2" = 1'-0"

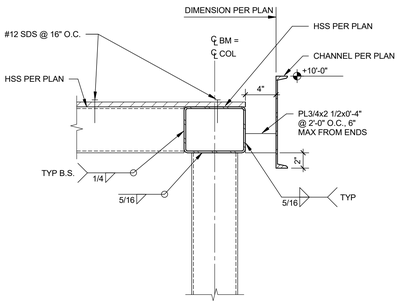

16 DETAIL

1 1/2" = 1'-0"

NOLL & TAM ARCHITECTS
729 Heinz Avenue
Berkeley, CA 94710
tel 510.542.2200
fax 510.542.2201

SEAL

REGISTERED PROFESSIONAL ENGINEER
TANJEET JUNEJA
72676
CIVIL
STATE OF CALIFORNIA

APPROVALS

FILE NUMBER: 07-C1

DIVISION OF THE STATE ARCHITECT
APP# 01-117630
ACS_____ FLS_____ SSS_____
Date:

WALTER P MOORE

PROJECT TITLE

CONTRA COSTA CCD
D-4002
DVC SAN RAMON CAMPUS EXPANSION & RENOVATION

1690 Watermill Rd.
San Ramon, CA 94582

ISSUE TITLE
INCREMENT 1 - RENOVATION - FINAL

ISSUE DATE	10/07/2021
NOLL & TAM JOB NUMBER	21630

REVISIONS

	DATE	DESCRIPTION
1	TBD	AS-BUILT SET

SHEET TITLE
STEEL DETAILS

SHEET NUMBER
S7.01.1

10/7/2021 12:37:42 PM BIM 360://S13-16009-00 DVC San Ramon Campus Expansion (INCR1)/S_DVCSR_EXPANSION_INCR1_R18.rvt

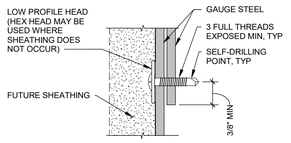

STEEL TO STEEL

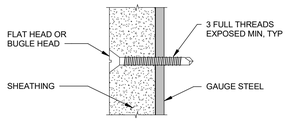

SHEATHING TO STEEL

NOMINAL SIZE	CATALOG SIZE	MINIMUM PROPERTIES			SPACING (INCHES)	MAX HT (FEET) (L/240 DEFL)
		Ix (in)⁴	Sx (in)³	Ma (in-k)		
WALL STUDS						
2 ½" x 20 GA	250S125-33	0.1780	0.1420	2.4100	12.0000	13'-2"
3 5/8" x 20 GA	362S125-33	0.4150	0.2010	3.5900	16.0000	16'-0"
3 5/8" x 18 GA	362S125-43	0.5360	0.2850	5.3100	16.0000	17'-5"
3 5/8" x 16 GA	362S125-54	0.6550	0.3410	9.6200	16.0000	18'-7"
4" x 20 GA	400S125-33	0.5310	0.2650	4.0100	16.0000	17'-3"
4" x 18 GA	400S125-43	0.6820	0.3410	5.9600	16.0000	18'-10"
4" x 16 GA	400S125-54	0.8350	0.4180	10.8100	16.0000	20'-2"
6" x 20 GA	600S125-33	1.4090	0.4700	6.3200	16.0000	23'-9"
6" x 18 GA	600S125-43	1.8170	0.6060	9.4600	16.0000	26'-1"
6" x 16 GA	600S125-54	2.2360	0.7450	17.3400	12.0000	27'-11"
WALL TRACKS						
2 ½" x 16 GA	250T125-54	0.2970	0.1880	5.6400	TYP TRACK AT 2 ½" STUDS	
2 ½" x 16 GA	250T150-54	0.3250	0.1970	5.8900	TOP TRACK	
2 ½" x 16 GA	250T200-54	0.3710	0.2090	6.2500	CAPPING TRACK	
3 5/8" x 16 GA	362T125-54	0.6780	0.3120	9.3400	TYP TRACK AT 3 5/8" STUDS	
3 5/8" x 16 GA	362T150-54	0.7350	0.3250	9.7400	TOP TRACK	
3 5/8" x 16 GA	362T200-54	0.8320	0.3450	10.3400	CAPPING TRACK	
4" x 16 GA	400T125-54	0.9040	0.4310	7.5300	TYP TRACK AT 4" STUDS	
4" x 16 GA	400T150-54	1.0250	0.4890	7.8900	TOP TRACK	
4" x 16 GA	400T200-54	1.2680	0.6040	8.4200	CAPPING TRACK	
6" x 16 GA	600T125-54	2.2410	0.5920	17.7300	TYP TRACK AT 6" STUDS	
6" x 16 GA	600T150-54	2.4000	0.6090	18.2400	TOP TRACK	
6" x 16 GA	600T200-54	2.6410	0.7170	21.4800	CAPPING TRACK	

1. PROVIDE STUDS, TRACKS, AND BRACING PER THE SCHEDULE ON 4/S9.01.1
2. SEE ARCH DWGS FOR WALL TYPES, AND FINISHES. SEE ARCH DWGS FOR RATED WALL LOCATIONS.
3. ALL STUDS AND TRACKS SHALL CONFORM TO ASTM A653 OR A1003.
   a. 18 GAGE AND LIGHTER: MINIMUM YIELD OF 33 KSI
   b. 16 GAGE AND HEAVIER: MINIMUM YIELD OF 50 KSI
   c. ALL STUDS AND TRACKS SHALL BE MANUFACTURED BY CURRENT MEMBERS OF THE STEEL STUD MANUFACTURER'S ASSOCIATION (SSMA). ALL STUDS AND TRACKS SHALL COMPLY WITH AISI S201-07.
4. ALL FRAMING COMPONENTS SHALL BE CUT SQUARELY OR ON AN ANGLE (SUCH AS BRACING) TO SQUARELY FIT AGAINST ABUTTING MEMBERS. MEMBERS SHALL BE HELD FIRMLY IN POSITION UNTIL PROPERLY FASTENED.
5. WHEN PROVIDED, FACTORY PUNCHOUTS SHALL BE LOCATED ALONG THE CENTERLINE OF THE WEBS OF STUDS AND HAVE MINIMUM CENTER TO CENTER SPACING OF 24". PUNCHOUTS FOR MEMBERS LESS THAN 2.5" DEEP SHALL BE A MAXIMUM OF 3/4" WIDE x 4" LONG.
6. SPLICES IN STUDS AND BRACES SHALL NOT BE PERMITTED.
7. ALL FRAMING SHALL BE COORDINATED WITH GLAZING MANUFACTURER, MECHANICAL, ELECTRICAL, PLUMBING AND OTHER TRADES.
8. POWER ACTUATED FASTENERS (PAF) SHALL BE HILTI'S DS (0.177" DIA. x 1 1/2" EMBEDMENT) PER ICC-ESR REPORT NO. 1663. PROVIDE 0.08" THICK x 1.1" SQ OR 1.425" ROUND WASHERS FOR ALL POWER ACTUATED FASTENERS.
9. PROVIDE SELF DRILLING SHEET METAL SCREWS (SMS) PER DETAIL 5/S9.01.1
10. SEE 18/S9.01.1 OR 19/S9.01.1 FOR TYPICAL BRIDGING DETAILS USING EITHER COLD ROLLED CHANNELS (CRC) OR FLAT STRAPS WITH BLOCKING. BRIDGING MAY BE OMITTED WHERE THE FOLLOWING SHEATHING AND FASTENERS ARE PROVIDED OF BOTH FACES OF STUD WALLS:

WALL SHEATHING	FASTENER
SINGLE PLY GYPSUM WALLBOARD AND/OR GYPSUM LATH	#6 x 1 1/4" LONG x 0.3145" DIA FLAT HEAD SELF DRILLING SCREW AT 8" O.C. PER ASTM C954 AND ASTM C1280
TWO PLY GYPSUM WALL BOARD	#6 x 1 3/4" LONG x 0.3145" DIA FLAT HEAD SELF DRILLING SCREW AT 8" O.C. PER ASTM C954 AND ASTM C1280
PLYWOOD	#6 PHILLIPS BUGLE HEAD x 1 1/4" SCREWS SPACED PER TABLE ASTM C1280 AT 8" O.C.

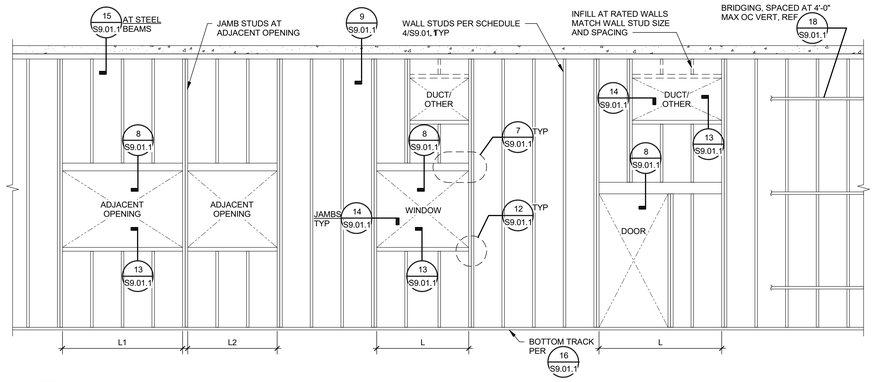

5 SHEET METAL SCREW (SMS)

1 1/2" = 1'-0"

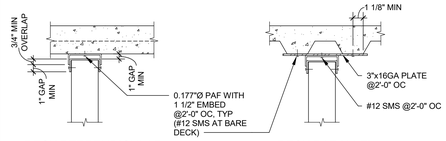

DECK PERPENDICULAR DECK PARALLEL

4 INTERIOR WALL STUD SCHEDULE

NO SCALE

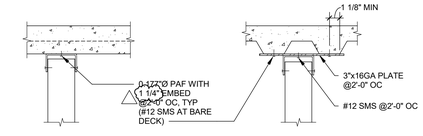

DECK PERPENDICULAR DECK PARALLEL

3 METAL STUD FRAMING NOTES

NO SCALE

NOMINAL SIZE	CATALOG SIZE	MINIMUM PROPERTIES		
		I_x (IN^4)	S_x (IN^3)	M_a (IN-K)
4" x 16 GA	400S162-54	1.098	0.4980	14.9000
6" x 16 GA	600S162-54	2.860	0.9160	25.9000
8" x 16 GA	800S162-54	5.600	1.2290	32.8100

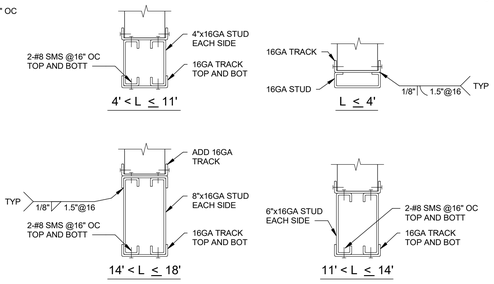

2 TYPICAL INTERIOR METAL STUD FRAMING ELEVATION

NO SCALE

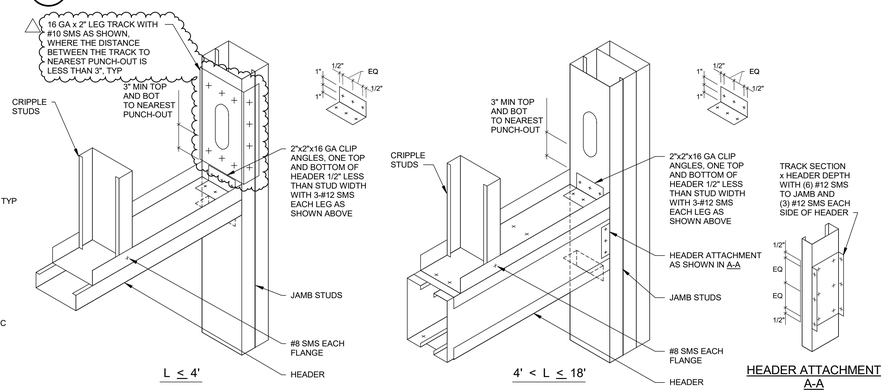

10 ALTERNATE TOP TRACK

1" = 1'-0"

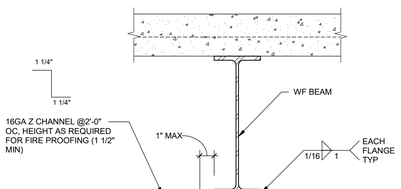

NOTE: INSIDE DIMENSION OF OUTER TRACK TO BE 1/8" MORE THAN STUD WIDTH.

9 INTERIOR TOP TRACK

1" = 1'-0"

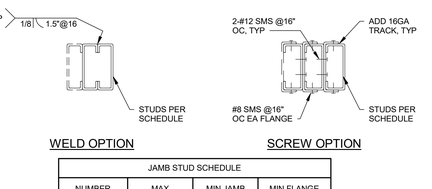

8 HEADERS

1 1/2" = 1'-0"

NOMINAL SIZE	CATALOG SIZE	MINIMUM PROPERTIES		
		I_x (IN^4)	S_x (IN^3)	M_a (IN-K)
2 1/2" x 14 GA	250S162-68	0.4500	0.3600	12.2100
3 5/8" x 14 GA	362S162-68	1.0690	0.5900	17.6500
6" x 14 GA	600S162-68	3.5250	1.1750	35.6900

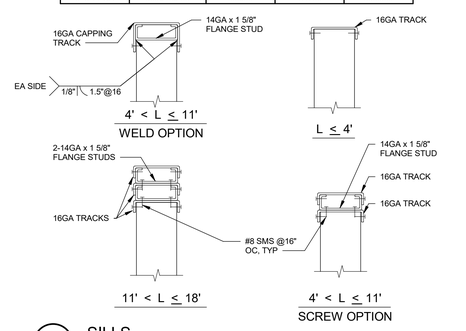

7 HEADER AND JAMB CONNECTION

1 1/2" = 1'-0"

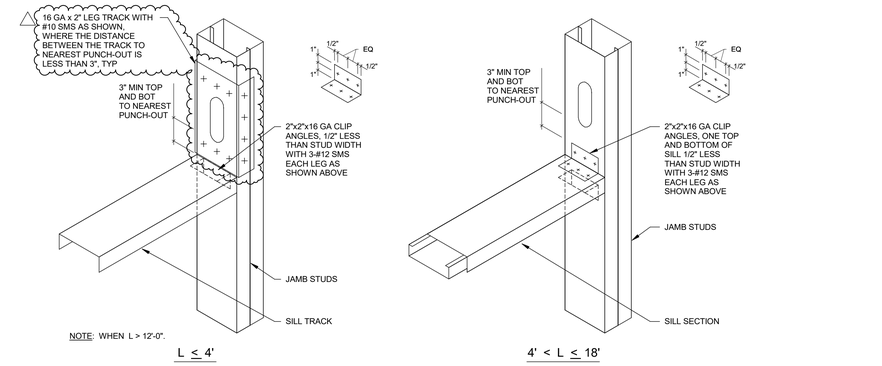

15 TOP TRACK AT PARALLEL WF BEAM

1 1/2" = 1'-0"

14 JAMBS

1 1/2" = 1'-0"

WELD OPTION SCREW OPTION

JAMB STUD SCHEDULE			
NUMBER OF STUDS AND GAGE	MAX ALLOWABLE OPENING	MIN JAMB STUD DEPTH (1)	MIN FLANGE WIDTH
(2) STUDS 18GA	6' - 0"	-------	1 5/8" MIN
(2) STUDS 16GA	12' - 0"	3 5/8" MIN	1 5/8" MIN
(3) STUDS 16GA	18' - 0"	6" MIN	1 5/8" MIN

NOTE:
1. JAMB STUD DEPTHS SHALL MATCH TYPICAL WALL STUD DETPHS, UNLESS NOTED OTHERWISE.
2. MAX ALLOWABLE OPENING WIDTH IS THE COMBINED OPENING WIDTH L1 + L2 AT ADJACENT OPENINGS.

13 SILLS

1 1/2" = 1'-0"

12 SILL AND JAMB CONNECTION

1 1/2" = 1'-0"

20 CANTILEVELER STUD WALL

1" = 1'-0"

STIFFCLIP SCHEDULE	
STUD WIDTH	STIFFCLIP
3 5/8"	CL362-118H
4"	CL400-118H
6"	CL600-118H

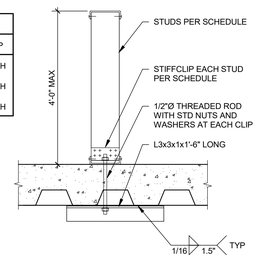

NOTE: STIFFCLIPS AS MANUFACTURERD BY THE STEEL NETWORK, INC.

19 BRIDGING - ALTERNATE

1" = 1'-0"

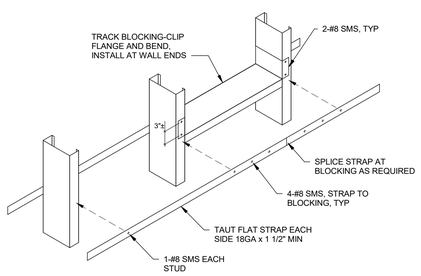

18 BRIDGING

1" = 1'-0"

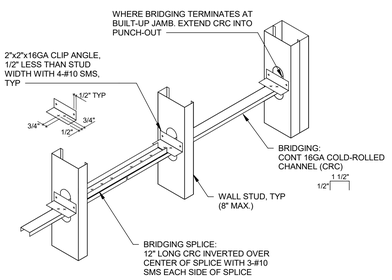

NOTE: DETAIL 19 ON THIS SHEET MAY BE USED AS AN ALTERNATE.

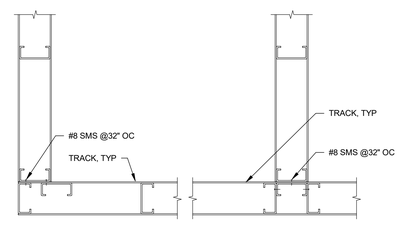

CORNER A-A INTERSECTION B-B

17 WALL CORNERS AND INTERSECTION

1" = 1'-0"

16 BOTTOM TRACK

1" = 1'-0"

NOLL & TAM ARCHITECTS

729 Heinz Avenue
Berkeley, CA 94710
tel 510.542.2200
fax 510.542.2201

SEAL

REGISTERED PROFESSIONAL ENGINEER TANJEET JUNEJA 72676 CIVIL STATE OF CALIFORNIA

APPROVALS

FILE NUMBER: 07-C1

DIVISION OF THE STATE ARCHITECT

APP# 01-117630

ACS_____ FLS_____ SSS_____

Date:

WALTER P MOORE

PROJECT TITLE

CONTRA COSTA CCD
D-4002
DVC SAN RAMON CAMPUS EXPANSION & RENOVATION

1690 Watermill Rd.
San Ramon, CA 94582

ISSUE TITLE

INCREMENT 1 - RENOVATION - FINAL

ISSUE DATE	10/07/2021
NOLL & TAM JOB NUMBER	21630

REVISIONS

	DATE	DESCRIPTION
1	TBD	AS-BUILT SET

SHEET TITLE

METAL STUD WALL DETAILS

SHEET NUMBER

S9.01.1

10/7/2021 12:37:47 PM BIM 360://513-16009-00 DVC San Ramon Campus Expansion (INCR1)/S_DVCSR_EXPANSION_INCR1_R18.rvt

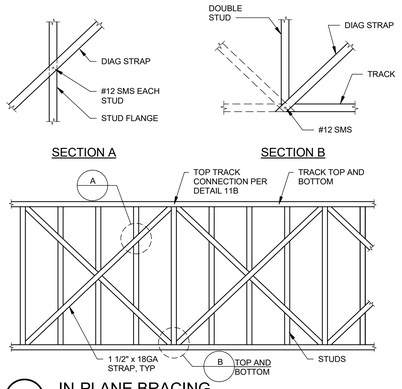

4 IN-PLANE BRACING
1" = 1'-0"

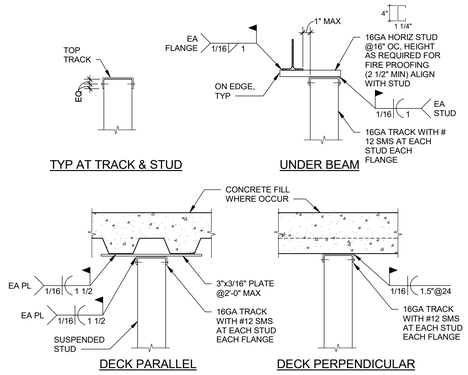

3 SUSPENDED STUD
1" = 1'-0"

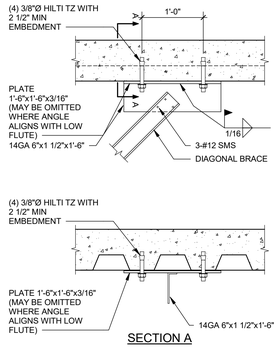

2 BRACE AT METAL DECK WITH CONCRETE
1" = 1'-0"

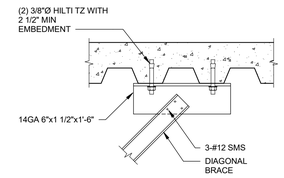

1 BRACE AT METAL DECK WITH CONCRETE
1" = 1'-0"

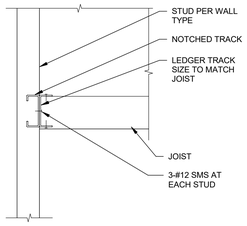

10 CEILING JOIST TO WALL STUD PARALLEL
1" = 1'-0"

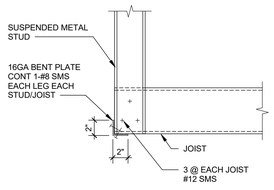

9 TYPICAL SOFFIT CORNER
1 1/2" = 1'-0"

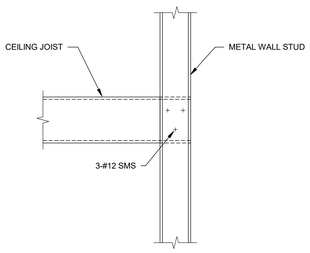

8 CLG JOIST TO WALL STUD PERPENDICULAR
1 1/2" = 1'-0"

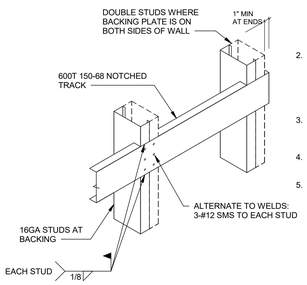

NOTES:

1. USE FOR UPPER WALL HUNG CABINET, FULL HEIGHT CABINET, GRAB BARS, HANDRAILS, WALL HUNG EQUIPMENT, ETC. MAX WT 300 LBS/LN FT.
2. LENGTH, HEIGHT AND LOCATION TO SUIT ITEMS BEING FASTENED. SEE ANCHORAGE DETAIL OF SPECIFIC ITEMS FOR ADDITIONAL INFORMATION.
3. ATTACH TO THREE STUDS MIN (DOUBLE STUD COUNTS AS ONE STUD).
4. USE #12 SCREWS MIN WHEN ATTACHING ITEMS.
5. USE DOUBLE STUDS WHEN STUD IS SUPPORTING BACKING ON BOTH SIDES.

7 BACKING - TYPE 2
1" = 1'-0"

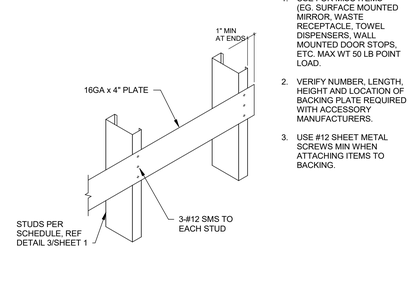

NOTES:

1. USE FOR MISC ITEMS (EG. SURFACE MOUNTED MIRROR, WASTE RECEPTACLE, TOWEL DISPENSERS, WALL MOUNTED DOOR STOPS, ETC. MAX WT 50 LB POINT LOAD.
2. VERIFY NUMBER, LENGTH, HEIGHT AND LOCATION OF BACKING PLATE REQUIRED WITH ACCESSORY MANUFACTURERS.
3. USE #12 SHEET METAL SCREWS MIN WHEN ATTACHING ITEMS TO BACKING.

6 BACKING - TYPE 1
1" = 1'-0"

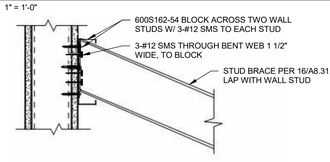

BRACE CONNECTION TO SHEATHED STUD WALL

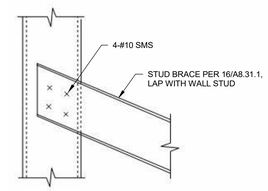

BRACE CONNECTION TO WALL STUD

12 CEILING BRACE TO WALL CONNECTION
1" = 1'-0"

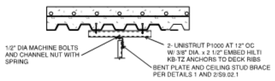

BRACE PARALLEL TO DECK RIBS ATTACHMENT

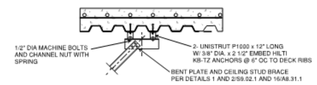

BRACE PERPENDICULAR TO DECK RIBS ATTACHMENT

11 ALTERNATE CEILING STUD BRACE ATTACHMENT TO DECK DETAILS
NO SCALE

NOLL & TAM ARCHITECTS
729 Heinz Avenue
Berkeley, CA 94710
tel 510.542.2200
fax 510.542.2201

SEAL

REGISTERED PROFESSIONAL ENGINEER TANJEET JUNEJA 72676 CIVIL STATE OF CALIFORNIA

APPROVALS

FILE NUMBER: 07-C1

DIVISION OF THE STATE ARCHITECT

APP# 01-117630

ACS_____ FLS_____ SSS_____

Date:

WALTER P MOORE

PROJECT TITLE

CONTRA COSTA CCD
D-4002
DVC SAN RAMON CAMPUS EXPANSION & RENOVATION

1690 Watermill Rd.
San Ramon, CA 94582

ISSUE TITLE
INCREMENT 1 - RENOVATION - FINAL

ISSUE DATE 10/07/2021

NOLL & TAM JOB NUMBER 21630

REVISIONS

	DATE	DESCRIPTION
1	TBD	AS-BUILT SET

SHEET TITLE
METAL STUD WALL DETAILS

SHEET NUMBER
S9.02.1

10/7/2021 12:37:50 PM BIM 360://313-16009-00 DVC San Ramon Campus Expansion (INCR1)/S_DVCSR_EXPANSION_INCR1_R18.rvt

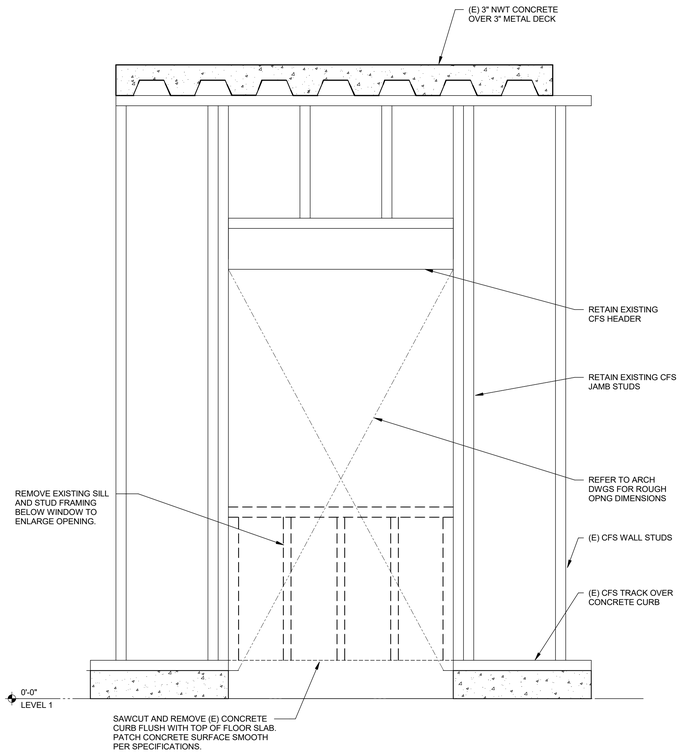

10 NEW OPENING FOR DOOR 181A AT BOOKSTORE
1" = 1'-0"

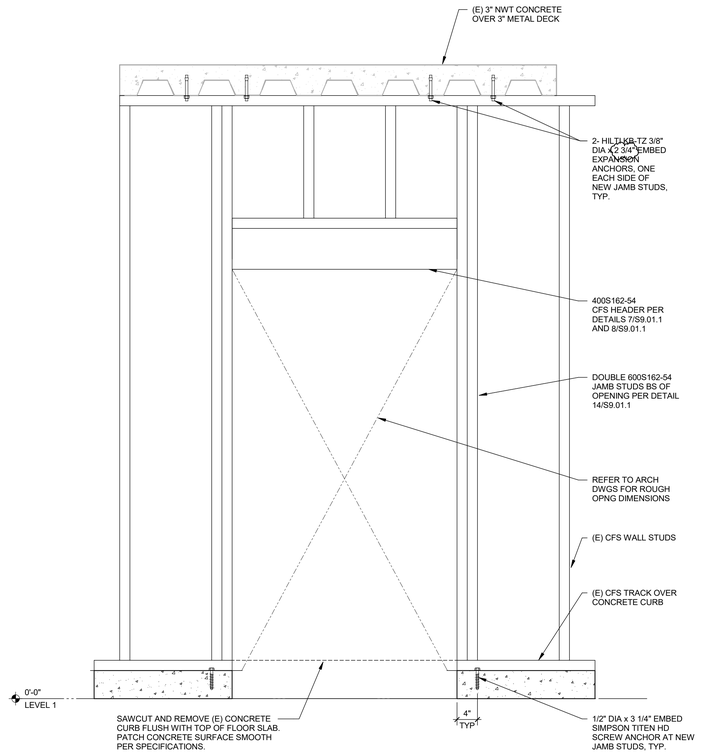

8 NEW DOOR OPENING IN EXISTING WALL
1" = 1'-0"

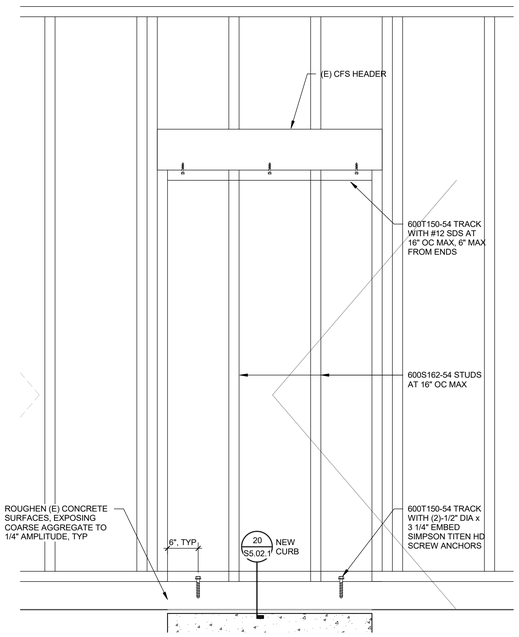

6 INFILL EXISTING OPENING AT EXTERIOR WALL
1" = 1'-0"

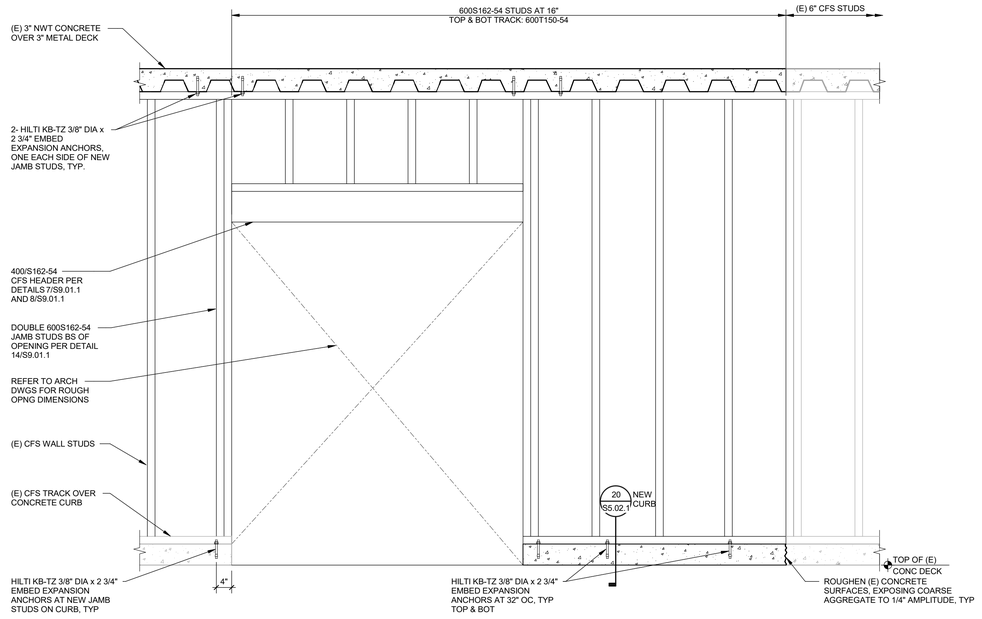

12 NEW DOOR AND INFILL WALL FRAMING AT A&P LAB
3/4" = 1'-0"

NOLL & TAM ARCHITECTS
729 Heinz Avenue
Berkeley, CA 94710
tel 510.542.2200
fax 510.542.2201

SEAL

REGISTERED PROFESSIONAL ENGINEER
TANJEET JUNEJA
72676
CIVIL
STATE OF CALIFORNIA

APPROVALS
FILE NUMBER: 07-C1
DIVISION OF THE STATE ARCHITECT
APP# 01-117630
ACS_____FLS_____SSS_____
Date:

WALTER P MOORE

PROJECT TITLE
CONTRA COSTA CCD
D-4002
DVC SAN RAMON CAMPUS EXPANSION & RENOVATION
1690 Watermill Rd.
San Ramon, CA 94582

ISSUE TITLE
INCREMENT 1 - RENOVATION - FINAL

ISSUE DATE **10/07/2021**
NOLL & TAM JOB NUMBER **21630**

REVISIONS

	DATE	DESCRIPTION
2	TBD	CCD
1	TBD	AS-BUILT SET

SHEET TITLE
EXTERIOR METAL STUD WALL DETAILS

SHEET NUMBER
S9.03.1

10/7/2021 12:37:02 PM BIM 360://S13-16009-00 DVC San Ramon Campus Expansion (INCR1)/S_DVCSR_EXPANSION_INCR1_R18.rvt

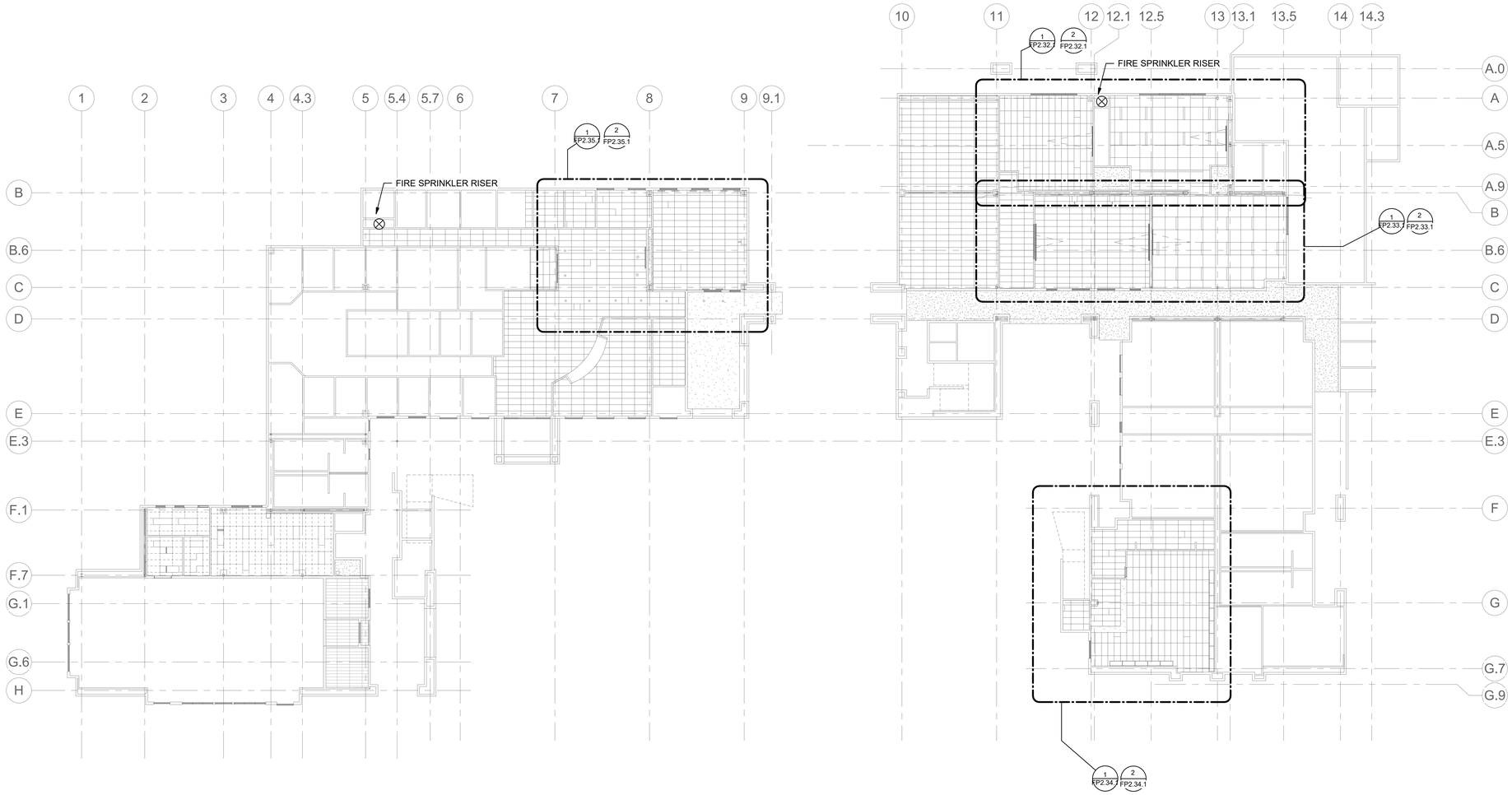

1 1ST FLOOR OVERALL PLAN - FIRE PROTECTION

0' 8' 16' 32'

1/16" = 1'-0"

9/29/2021 2:56:15 PM

NOLL & TAM ARCHITECTS

729 Heinz Avenue
Berkeley, CA 94710
tel 510.542.2200
fax 510.542.2201

ARCHITECTS SEAL

REGISTERED PROFESSIONAL ENGINEER
RICHARD H. RUSSELL
No. M31923
MECHANICAL
STATE OF CALIFORNIA

Date Signed: ----

APPROVALS

FILE NUMBER: 07-C1

DIVISION OF THE STATE ARCHITECT

APP# 01-117630

ACS_____ FLS_____ SSS_____

Date:

PROJECT 2016-0538

CONTACT Alex Bobowiec

INTERFACE ENGINEERING

135 Main Street
Suite 400
San Francisco, CA 94105
TEL 415.489.7240
FAX 415.489.7289
www.interfaceengineering.com

PROJECT TITLE

CONTRA COSTA CCD

D-4002
DVC SAN RAMON CAMPUS EXPANSION & RENOVATION

1690 Watermill Rd.
San Ramon, CA 94582

ISSUE TITLE

INCREMENT 1

ISSUE DATE	11/30/2018
NOLL & TAM JOB NUMBER	21630

REVISIONS

NO.	DATE	DESCRIPTION

SHEET TITLE

1ST FLOOR OVERALL PLAN - FIRE PROTECTION

SHEET NUMBER

FP2.30A.1

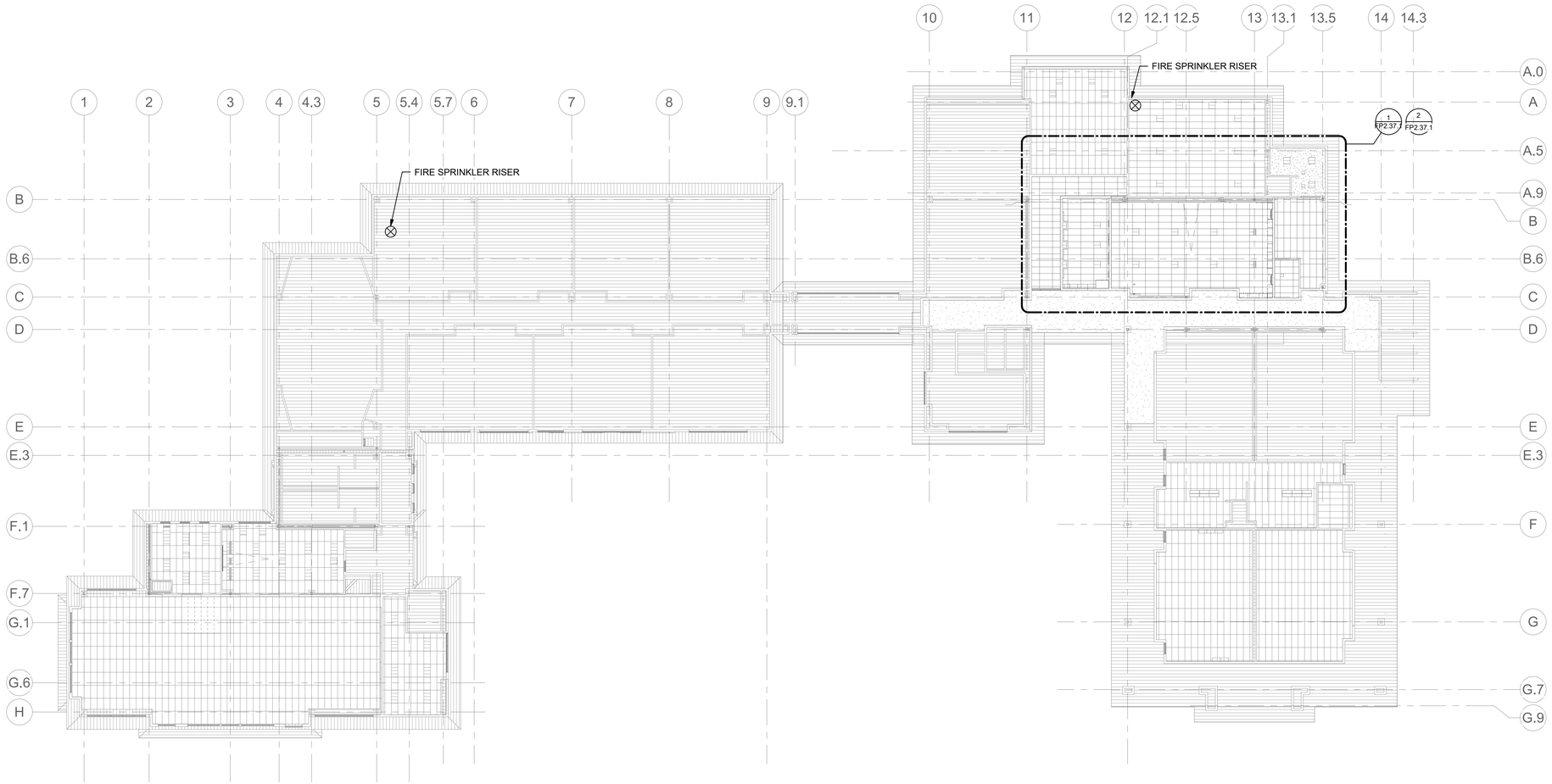

1 2ND FLOOR OVERALL PLAN - FIRE PROTECTION

0' 4' 8' 16'

1/16" = 1'-0"

9/29/2021 2:56:18 PM

NOLL & TAM ARCHITECTS

729 Heinz Avenue
Berkeley, CA 94710
tel 510.542.2200
fax 510.542.2201

ARCHITECTS SEAL

REGISTERED PROFESSIONAL ENGINEER
RICHARD H. RUSSELL
No. M31923
MECHANICAL
STATE OF CALIFORNIA

Date Signed: ----

APPROVALS

FILE NUMBER: 07-C1

DIVISION OF THE STATE ARCHITECT

APP# 01-117630

ACS_____ FLS_____ SSS_____

Date:

PROJECT 2016-0538

CONTACT Alex Bobowiec

INTERFACE ENGINEERING

135 Main Street
Suite 400
San Francisco, CA 94105
TEL 415.489.7240
FAX 415.489.7289
www.interfaceengineering.com

PROJECT TITLE

CONTRA COSTA CCD
D-4002
DVC SAN RAMON CAMPUS EXPANSION & RENOVATION

1690 Watermill Rd.
San Ramon, CA 94582

ISSUE TITLE

INCREMENT 1

ISSUE DATE	11/30/2018
NOLL & TAM JOB NUMBER	21630

REVISIONS

NO.	DATE	DESCRIPTION

SHEET TITLE

2ND FLOOR OVERALL PLAN - FIRE PROTECTION

SHEET NUMBER

FP2.30B.1

GENERAL SHEET NOTES

1 PROTECT ALL EXISTING SPRINKLER HEADS TO REMAIN. REMOVE PROTECTIVE COVER(S) ONCE NEW SPRINKLER COMPONENTS ARE INSTALLED.

2 PROTECT EXISTING SPRINKLER PIPING DURING DEMO WORK FOR NEW CONNECTION(S) TO NEW SPRINKLER PIPING.

SHEET KEYNOTES

1 EXISTING SPRINKLER RISER

2 CONNECT TO EXISTING BRANCH LINE WITH A 1-1/4" X 1 " MECHANICAL TEE.

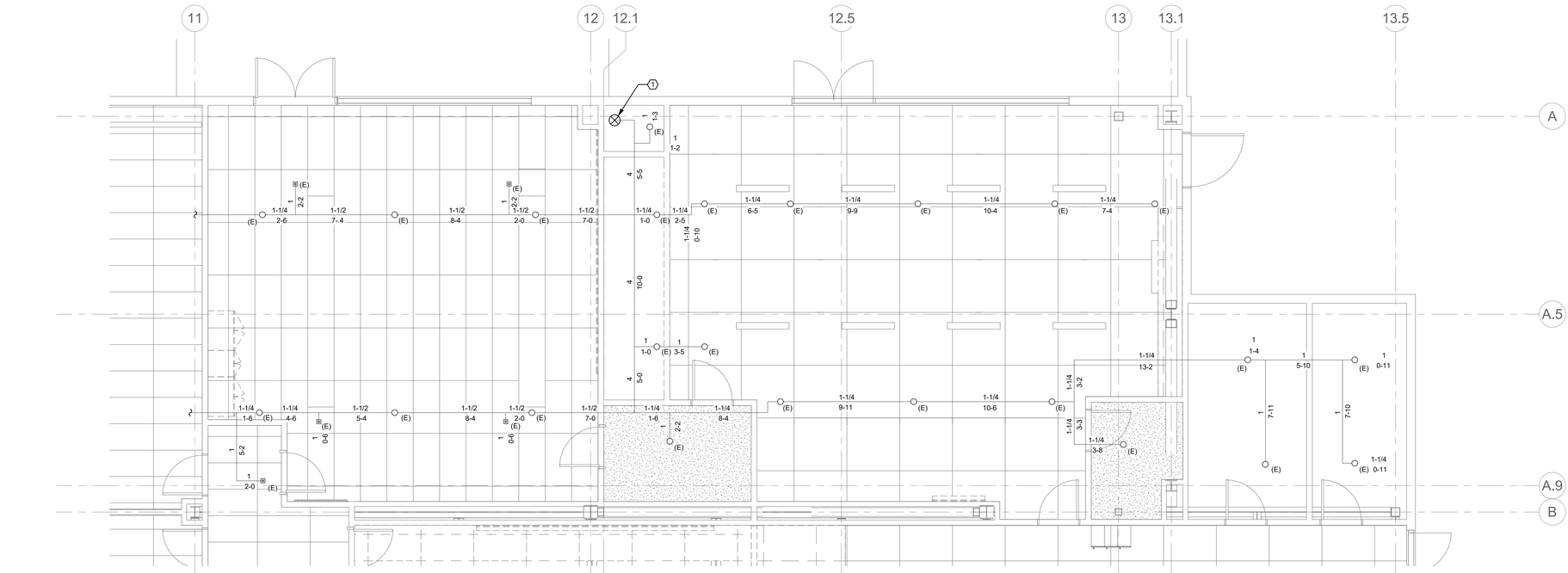

1 DEMO - 1ST FLOOR PLAN - CLASSROOM - PAINTING STUDIO - FIRE PROTECTION

0' 2' 4' 8'

1/4" = 1'-0"

2 NEW - 1ST FLOOR PLAN - CLASSROOM - PAINTING STUDIO - FIRE PROTECTION

0' 2' 4' 8'

1/4" = 1'-0"

9/29/2021 2:56:21 PM

NOLL & TAM ARCHITECTS

729 Heinz Avenue
Berkeley, CA 94710
tel 510.542.2200
fax 510.542.2201

ARCHITECTS SEAL

REGISTERED PROFESSIONAL ENGINEER
RICHARD H. RUSSELL
No. M31923
MECHANICAL
STATE OF CALIFORNIA

Date Signed: ----

APPROVALS

FILE NUMBER: 07-C1

DIVISION OF THE STATE ARCHITECT

APP# 01-117630

ACS_____ FLS_____ SSS_____

Date:

PROJECT 2016-0538

CONTACT Alex Bobowiec

INTERFACE ENGINEERING

135 Main Street
Suite 400
San Francisco, CA 94105
TEL 415.489.7240
FAX 415.489.7289
www.interfaceengineering.com

PROJECT TITLE

CONTRA COSTA CCD

D-4002

DVC SAN RAMON CAMPUS EXPANSION & RENOVATION

1690 Watermill Rd.
San Ramon, CA 94582

ISSUE TITLE

INCREMENT 1

ISSUE DATE	11/30/2018
NOLL & TAM JOB NUMBER	21630

REVISIONS

NO.	DATE	DESCRIPTION

SHEET TITLE

DEMO & NEW - 1ST FLOOR - EAST - CLASSROOM - PAINTING STUDIO - FIRE PROTECTION

SHEET NUMBER

FP2.32.1

GENERAL SHEET NOTES

1 PROTECT ALL EXISTING SPRINKLER HEADS TO REMAIN. REMOVE PROTECTIVE COVER(S) ONCE NEW SPRINKLER COMPONENTS ARE INSTALLED.

2 PROTECT EXISTING SPRINKLER PIPING DURING DEMO WORK FOR NEW CONNECTION(S) TO NEW SPRINKLER PIPING.

SHEET KEYNOTES

1 CONNECT TO EXISTING BRANCHLIND WITH A 1-1/4" X 1" MECHANICAL TEE.

2 CONNECT TO EXISTING BRANCHLIND WITH A 1-1/2" X 1" MECHANICAL TEE.

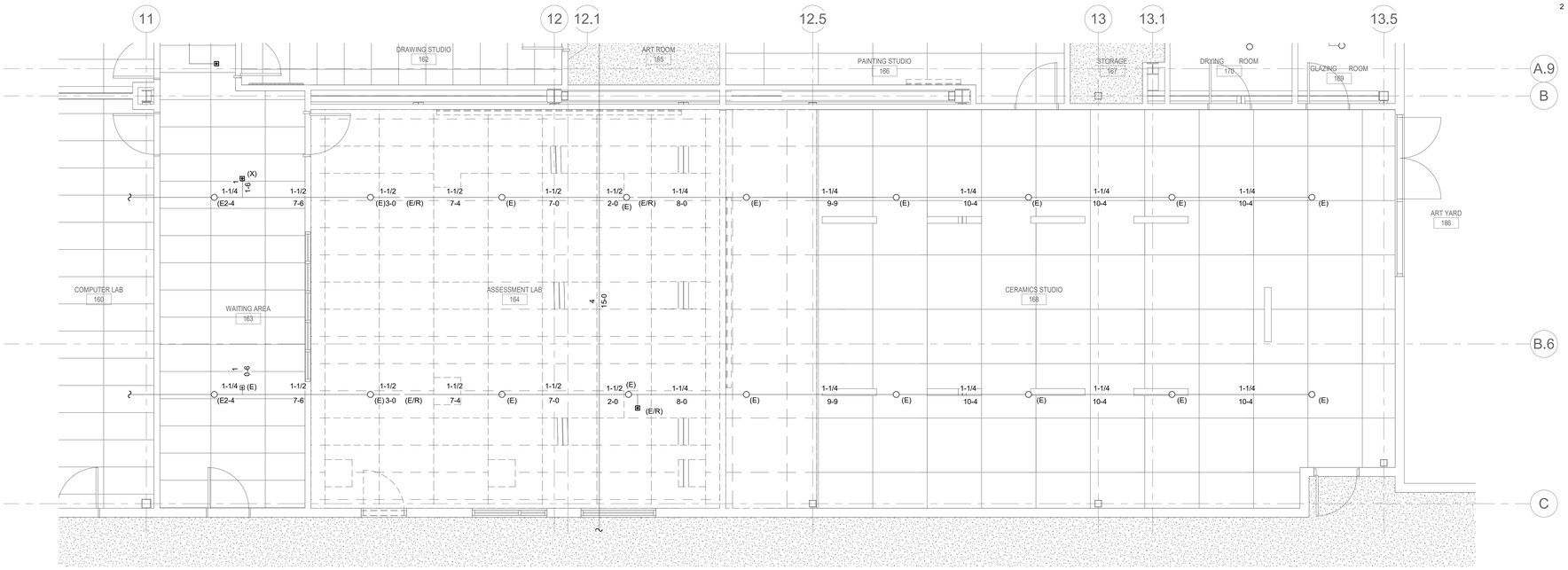

1 DEMO - 1ST FLOOR PLAN - CLASSROOM - CERAMIC STUDIO - FIRE PROTECTION

0' 2' 4' 8'
1/4" = 1'-0"

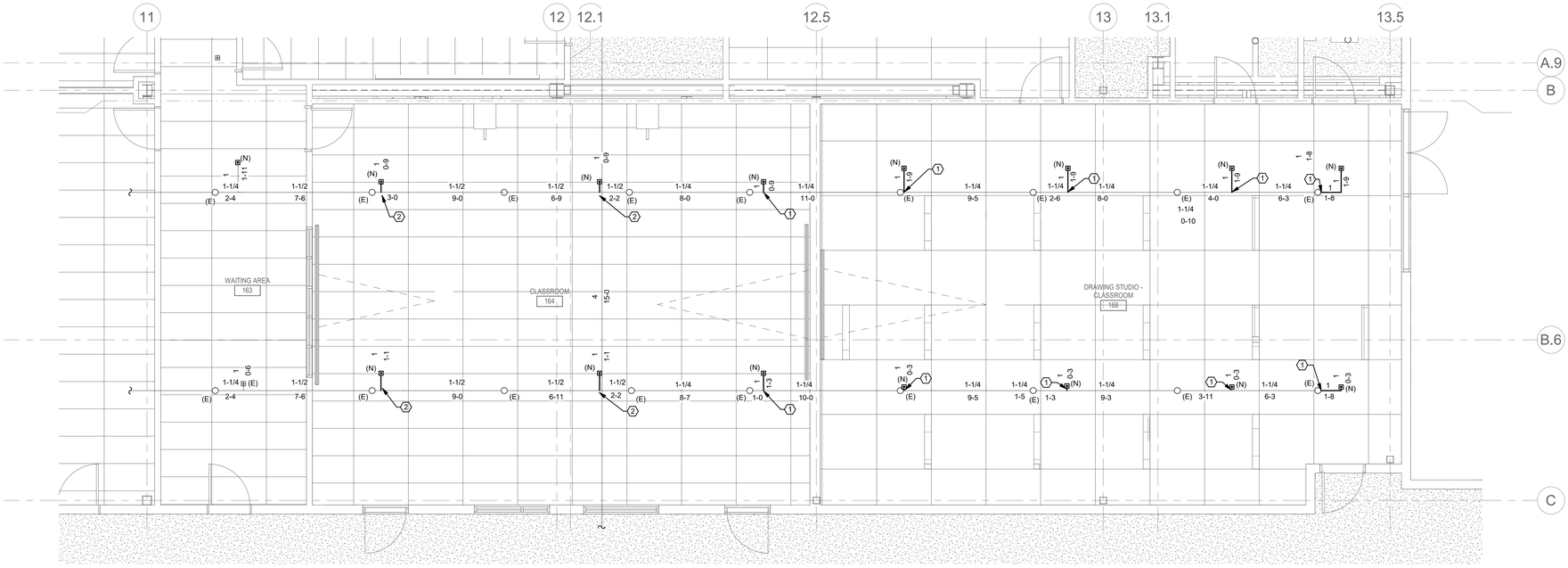

2 NEW - 1ST FLOOR PLAN - CLASSROOM - DRAWING STUDIO - FIRE PROTECTION

0' 2' 4' 8'
1/4" = 1'-0"

9/29/2021 2:56:24 PM

NOLL & TAM ARCHITECTS

729 Heinz Avenue
Berkeley, CA 94710
tel 510.542.2200
fax 510.542.2201

ARCHITECTS SEAL

REGISTERED PROFESSIONAL ENGINEER
RICHARD H. RUSSELL
No. M31923
MECHANICAL
STATE OF CALIFORNIA

Date Signed: ----

APPROVALS

FILE NUMBER: 07-C1

DIVISION OF THE STATE ARCHITECT

APP# 01-117630

ACS_____ FLS_____ SSS_____

Date:

PROJECT 2016-0538
CONTACT Alex Bobowiec

INTERFACE ENGINEERING
135 Main Street
Suite 400
San Francisco, CA 94105
TEL 415.489.7240
FAX 415.489.7289
www.interfaceengineering.com

PROJECT TITLE

CONTRA COSTA CCD
D-4002
DVC SAN RAMON CAMPUS EXPANSION & RENOVATION

1690 Watermill Rd.
San Ramon, CA 94582

ISSUE TITLE

INCREMENT 1

ISSUE DATE	11/30/2018
NOLL & TAM JOB NUMBER	21630

REVISIONS

NO.	DATE	DESCRIPTION

SHEET TITLE

DEMO & NEW - 1ST FLOOR - EAST - CLASSROOM - DRAWING STUDIO - FIRE PROTECTION

SHEET NUMBER

FP2.33.1

GENERAL SHEET NOTES

1 PROTECT ALL EXISTING SPRINKLER HEADS TO REMAIN. REMOVE PROTECTIVE COVER(S) ONCE NEW SPRINKLER COMPONENTS ARE INSTALLED.

2 PROTECT EXISTING SPRINKLER PIPING DURING DEMO WORK FOR NEW CONNECTION(S) TO NEW SPRINKLER PIPING.

SHEET KEYNOTES

1 CONNECT TO EXISTING BRANCHLINE WITH A 1-1/4" X 1" MECHANCIAL TEE.

REMOVED FROM SCOPE CCDA-8

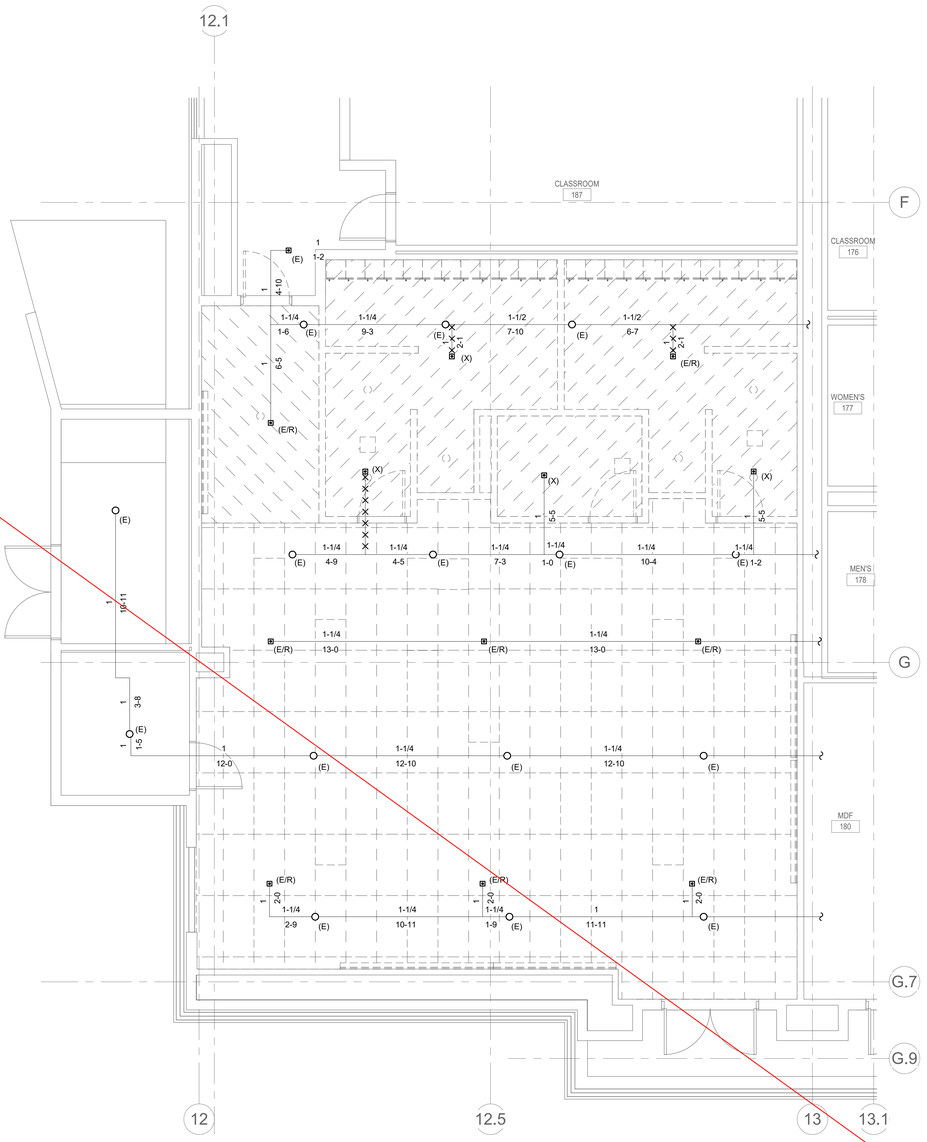

2 NEW - 1ST FLOOR PLAN- BOOKSTORE - FIRE PROTECTION

0' 2' 4' 8'
1/4" = 1'-0"

1 DEMO - 1ST FLOOR PLAN - MS TUTORIAL - FIRE PROTECTION

0' 2' 4' 8'
1/4" = 1'-0"

NOLL & TAM ARCHITECTS

729 Heinz Avenue
Berkeley, CA 94710
tel 510.542.2200
fax 510.542.2201

ARCHITECTS SEAL

REGISTERED PROFESSIONAL ENGINEER
RICHARD H. RUSSELL
No. M31923
MECHANICAL
STATE OF CALIFORNIA

Date Signed: ----

APPROVALS

FILE NUMBER: 07-C1

DIVISION OF THE STATE ARCHITECT
APP# 01-117630
ACS_____ FLS_____ SSS_____
Date:

PROJECT 2016-0538
CONTACT Alex Bobowiec

INTERFACE ENGINEERING
135 Main Street
Suite 400
San Francisco, CA 94105
TEL 415.489.7240
FAX 415.489.7289
www.interfaceengineering.com

PROJECT TITLE

CONTRA COSTA CCD
D-4002
DVC SAN RAMON CAMPUS EXPANSION & RENOVATION

1690 Watermill Rd.
San Ramon, CA 94582

ISSUE TITLE

INCREMENT 1

ISSUE DATE	11/30/2018
NOLL & TAM JOB NUMBER	21630

REVISIONS

NO.	DATE	DESCRIPTION

SHEET TITLE

DEMO & NEW - 1ST FLOOR - EAST - BOOKSTORE - FIRE PROTECTION

SHEET NUMBER

FP2.34.1

9/29/2021 2:56:27 PM

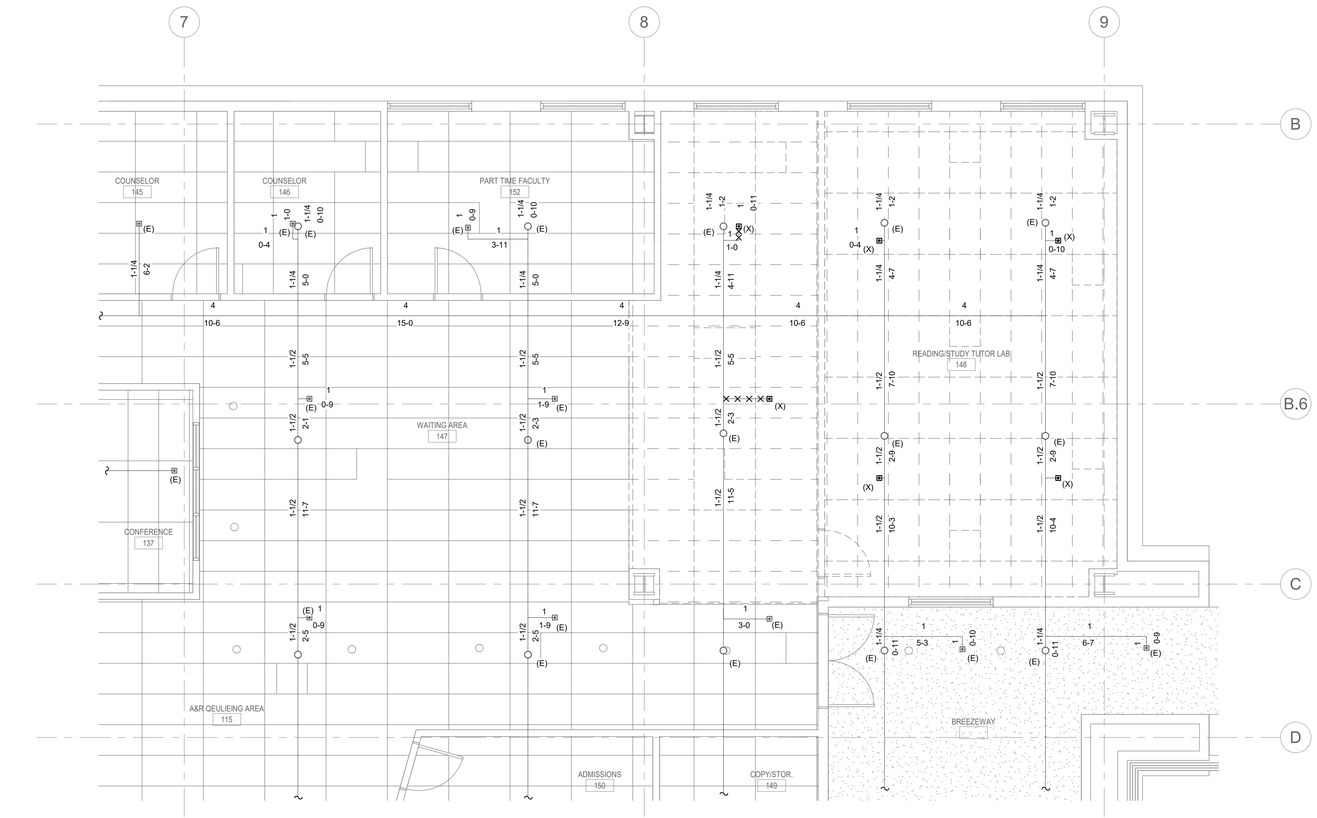

1 DEMO - 1ST FLOOR PLAN - WRITING TUTORIAL - FIRE PROTECTION

0' 2' 4' 8'

1/4" = 1'-0"

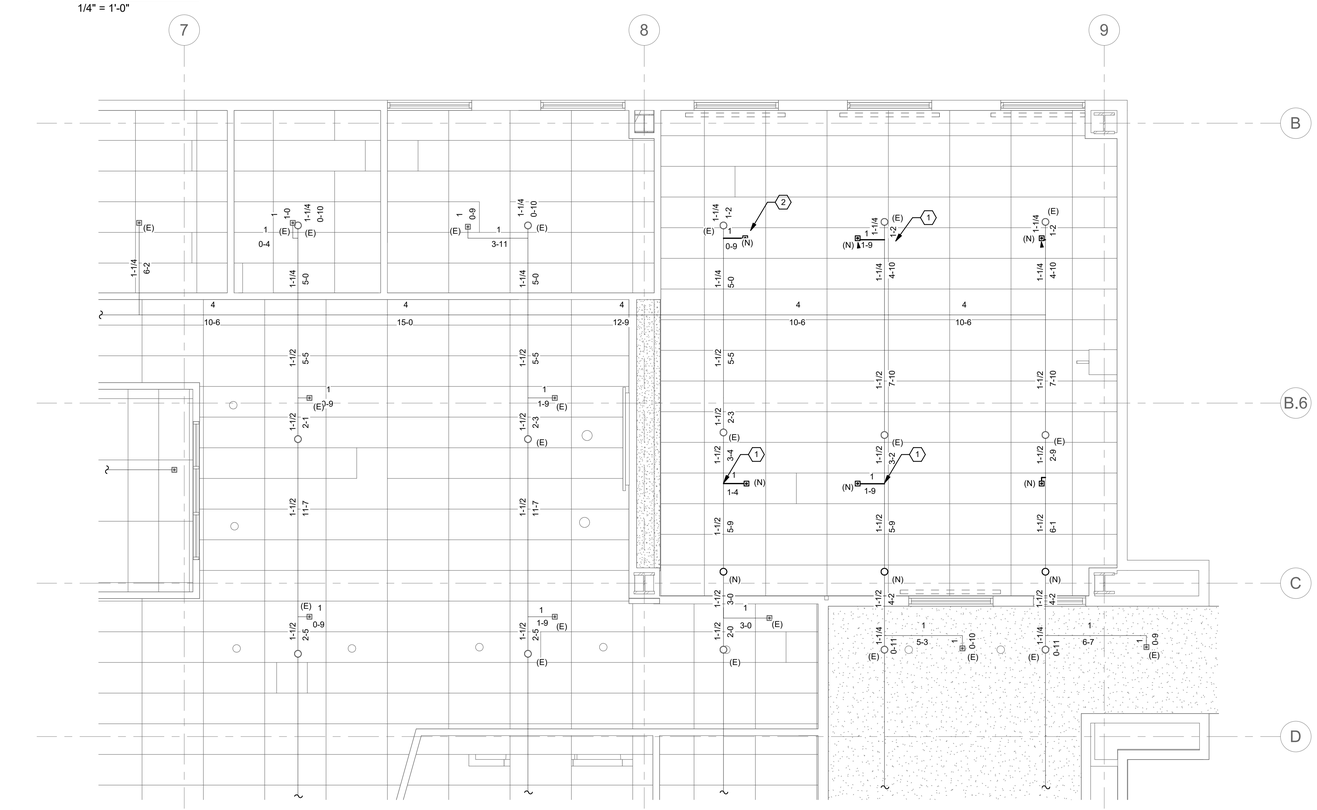

2 NEW - 1ST FLOOR PLAN - ASSESSMENT LAB - FIRE PROTECTION

0' 2' 4' 8'

1/4" = 1'-0"

GENERAL SHEET NOTES

1 PROTECT ALL EXISTING SPRINKLER HEADS TO REMAIN. REMOVE PROTECTIVE COVER(S) ONCE NEW SPRINKLER COMPONENTS ARE INSTALLED.

2 PROTECT EXISTING SPRINKLER PIPING DURING DEMO WORK FOR NEW CONNECTION(S) TO NEW SPRINKLER PIPING.

SHEET KEYNOTES

1 CONNECT TO EXISTING BRANCHLINE WITH A 1-1/2" X 1" MECHANCIAL TEE. NEW SPRINKLER COMPONENTS ARE INSTALLED.

2 CONNECT TO EXISTING BRANCHLINE WITH A 1-1/4" X 1" MECHANCIAL TEE. NEW SPRINKLER COMPONENTS ARE INSTALLED.

NOLL & TAM ARCHITECTS
729 Heinz Avenue
Berkeley, CA 94710
tel 510.542.2200
fax 510.542.2201

ARCHITECTS SEAL

REGISTERED PROFESSIONAL ENGINEER
RICHARD H. RUSSELL
No. M31923
MECHANICAL
STATE OF CALIFORNIA

Date Signed: ----

APPROVALS

FILE NUMBER: 07-C1

DIVISION OF THE STATE ARCHITECT
APP# 01-117630
ACS_____ FLS_____ SSS_____
Date:

PROJECT 2016-0538
CONTACT Alex Bobowiec

INTERFACE ENGINEERING
135 Main Street
Suite 400
San Francisco, CA 94105
TEL 415.489.7240
FAX 415.489.7289
www.interfaceengineering.com

PROJECT TITLE

CONTRA COSTA CCD
D-4002
DVC SAN RAMON CAMPUS EXPANSION & RENOVATION

1690 Watermill Rd.
San Ramon, CA 94582

ISSUE TITLE
INCREMENT 1

ISSUE DATE 11/30/2018
NOLL & TAM JOB NUMBER 21630

REVISIONS

NO.	DATE	DESCRIPTION

SHEET TITLE
DEMO & NEW - 1ST FLOOR - WEST - ASSESSMENT LAB - FIRE PROTECTION

SHEET NUMBER
FP2.35.1

9/29/2021 2:56:31 PM

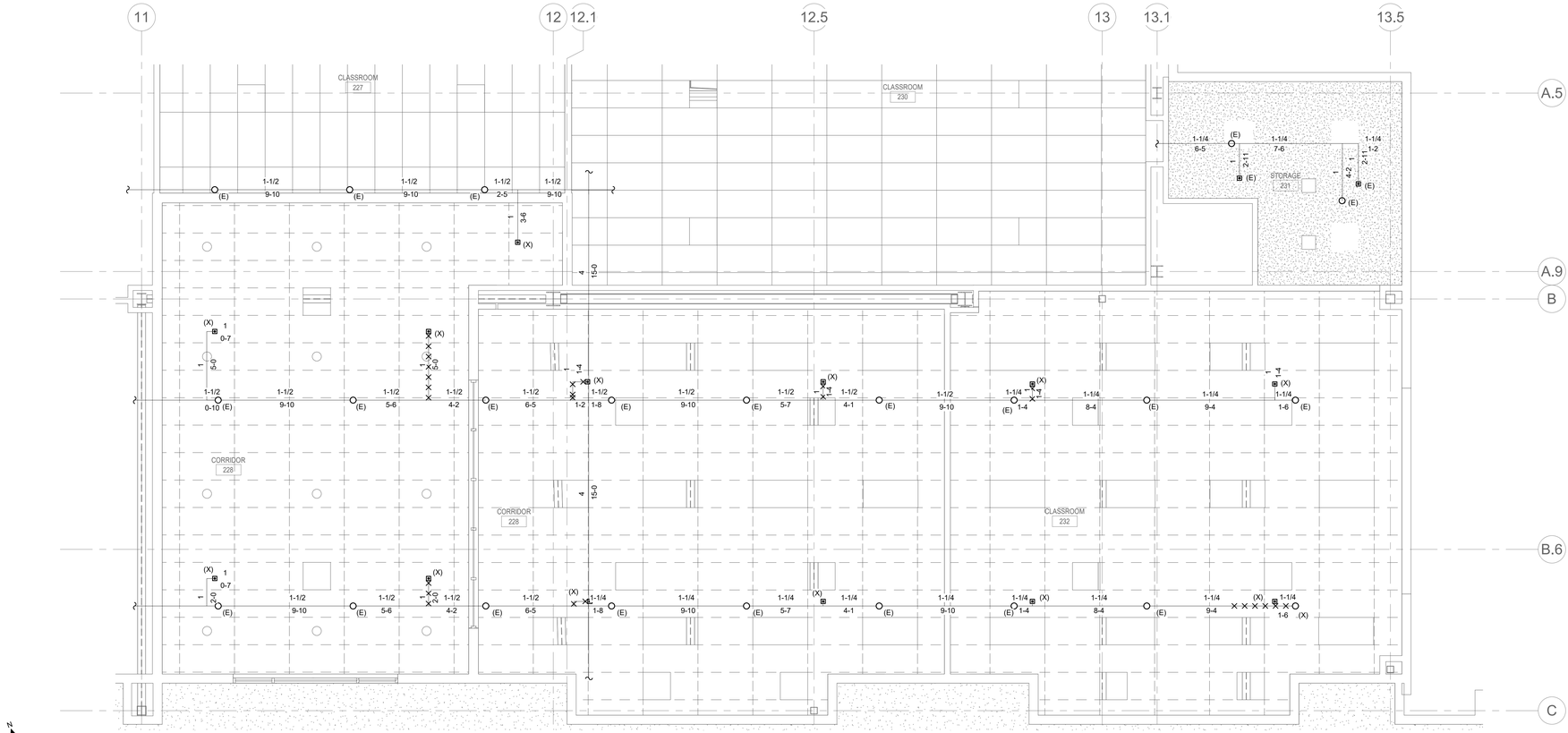

1 DEMO - 2ND FLOOR PLAN - CLASSROOMS - FIRE PROTECTION

0' 2' 4' 8'

1/4" = 1'-0"

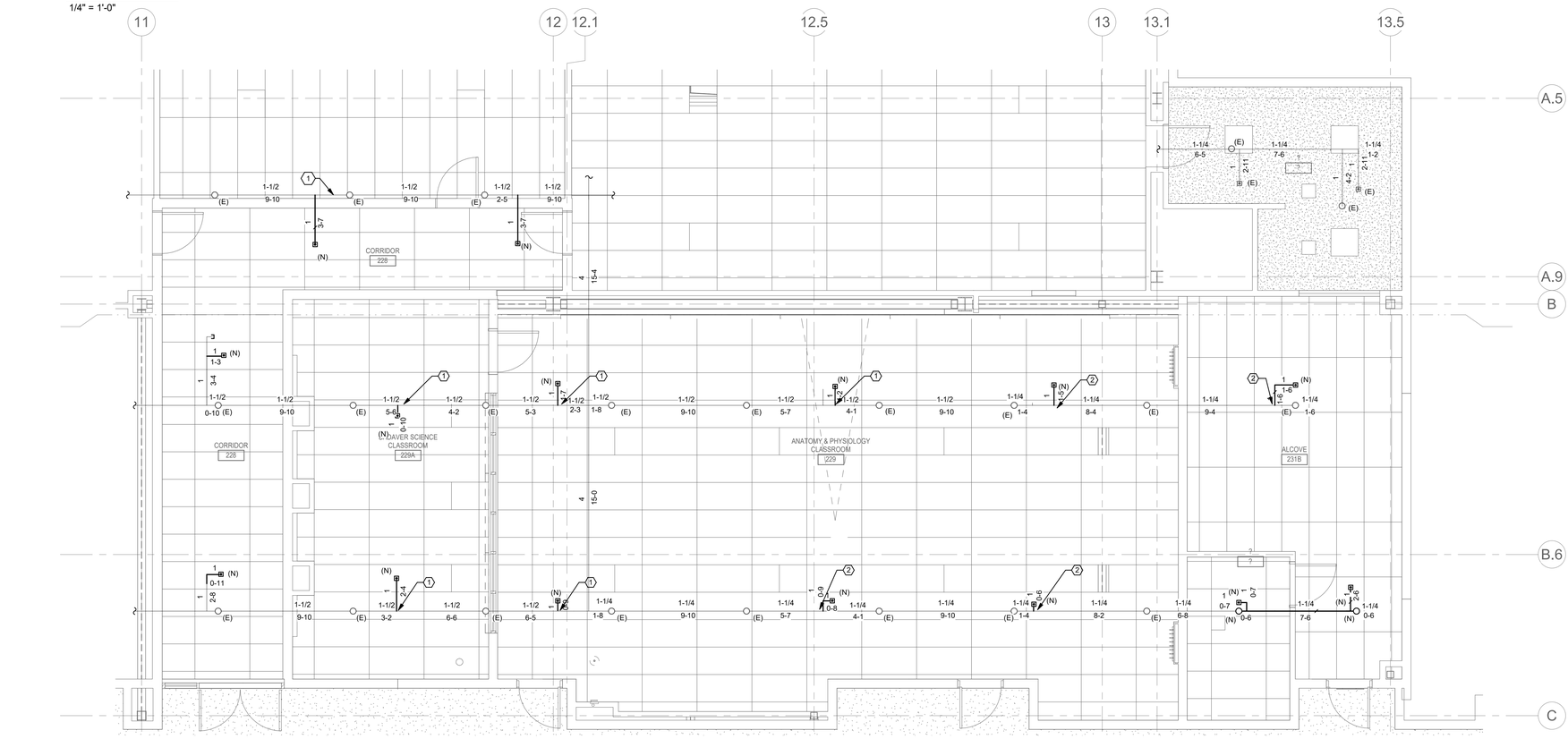

2 NEW - 2ND FLOOR PLAN - A&P LAB - FIRE PROTECTION

0' 2' 4' 8'

1/4" = 1'-0"

GENERAL SHEET NOTES

1 PROTECT ALL EXISTING SPRINKLER HEADS TO REMAIN. REMOVE PROTECTIVE COVER(S) ONCE NEW SPRINKLER COMPONENTS ARE INSTALLED.

2 PROTECT EXISTING SPRINKLER PIPING DURING DEMO WORK FOR NEW CONNECTION(S) TO NEW SPRINKLER PIPING.

SHEET KEYNOTES

1 CONNECT TO EXISTING BRANCHLINE WITH A 1-1/2" X 1" MECHANCIAL TEE. NEW SPRINKLER COMPONENTS ARE INSTALLED.

2 CONNECT TO EXISTING BRANCHLINE WITH A 1-1/4" X 1" MECHANCIAL TEE. NEW SPRINKLER COMPONENTS ARE INSTALLED.

NOLL & TAM ARCHITECTS

729 Heinz Avenue
Berkeley, CA 94710
tel 510.542.2200
fax 510.542.2201

ARCHITECTS SEAL

REGISTERED PROFESSIONAL ENGINEER
RICHARD H. RUSSELL
No. M31923
MECHANICAL
STATE OF CALIFORNIA

Date Signed: -----

APPROVALS

FILE NUMBER: 07-C1

DIVISION OF THE STATE ARCHITECT

APP# 01-117630

ACS_____ FLS_____ SSS_____

Date:

PROJECT 2016-0538
CONTACT Alex Bobowiec

INTERFACE ENGINEERING
135 Main Street
Suite 400
San Francisco, CA 94105
TEL 415.489.7240
FAX 415.489.7289
www.interfaceengineering.com

PROJECT TITLE

CONTRA COSTA CCD
D-4002
DVC SAN RAMON CAMPUS EXPANSION & RENOVATION

1690 Watermill Rd.
San Ramon, CA 94582

ISSUE TITLE

INCREMENT 1

ISSUE DATE	11/30/2018
NOLL & TAM JOB NUMBER	21630

REVISIONS

NO.	DATE	DESCRIPTION

SHEET TITLE

DEMO & NEW - 2ND FLOOR - EAST - A&P LAB - FIRE PROTECTION

SHEET NUMBER

FP2.37.1

9/29/2021 2:56:34 PM

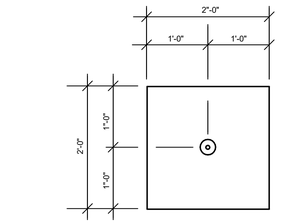

CENTER OF TILE (PEND.) DIAGRAM
2 X 2 TILE

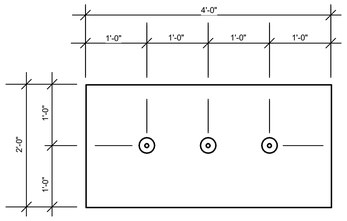

CENTER OR QUARTER OF TILE (PEND.) DIAGRAM
2 X 4 TILE

1 TILE DETAIL

NO SCALE

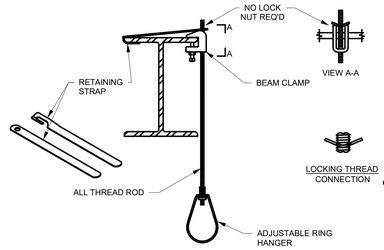

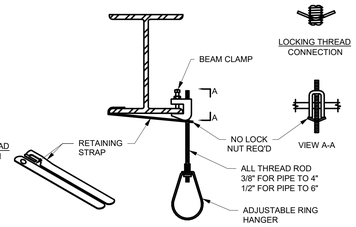

2 REVERSIBLE BEAM CLAMP

NO SCALE

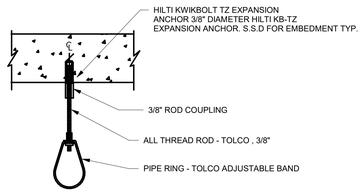

3 DRILLED CONCRETE ANCHOR HANGER

NO SCALE

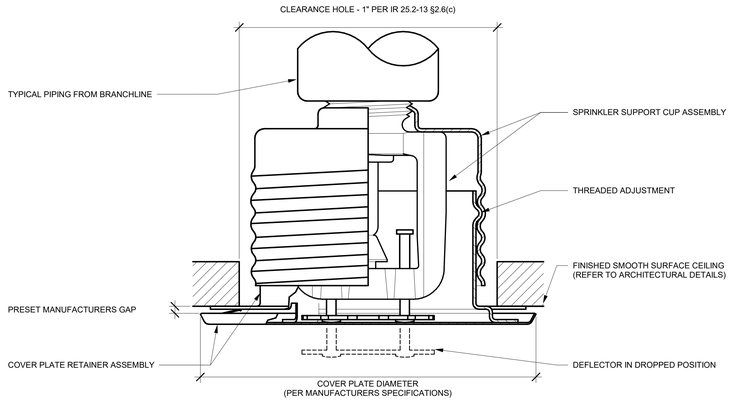

4 CONCEALED FLAT PLATE SPRINKLER

NO SCALE

NOLL & TAM ARCHITECTS

729 Heinz Avenue
Berkeley, CA 94710
tel 510.542.2200
fax 510.542.2201

ARCHITECTS SEAL

REGISTERED PROFESSIONAL ENGINEER
RICHARD H. RUSSELL
No. M31923
MECHANICAL
STATE OF CALIFORNIA

Date Signed: ----

APPROVALS

FILE NUMBER: 07-C1

DIVISION OF THE STATE ARCHITECT

APP# 01-117630

ACS_____FLS_____SSS_____
Date:

PROJECT 2016-0538
CONTACT Alex Bobowiec

INTERFACE ENGINEERING
135 Main Street
Suite 400
San Francisco, CA 94105
TEL 415.489.7240
FAX 415.489.7289
www.interfaceengineering.com

PROJECT TITLE

CONTRA COSTA CCD
D-4002
DVC SAN RAMON CAMPUS EXPANSION & RENOVATION

1690 Watermill Rd.
San Ramon, CA 94582

ISSUE TITLE

INCREMENT 1

ISSUE DATE	11/30/2016
NOLL & TAM JOB NUMBER	21630

REVISIONS

NO.	DATE	DESCRIPTION

SHEET TITLE

DETAILS - FIRE PROTECTION

SHEET NUMBER

FP5.01.1

9/29/2021 2:56:35 PM

PLUMBING SYMBOL LIST

NOTE: This is a standard symbol list and not all items listed may be used.

Abbreviations

(A)	ABANDON IN PLACE
AFF	ABOVE FINISHED FLOOR
AP	ACCESS PANEL
AR	ACID-RESISTANT
ADA	AMERICANS WITH DISABILITIES ACT
&	AND
A	AQUASTAT, ARCHITECT, ANCHOR, AMPHERE
@	AT
BFP	BACKFLOW PREVENTER
BV	BALANCING VALVE
BFF	BELOW FINISHED FLOOR
BF	BLIND FLANGE
BTUH	BRITISH THERMAL UNITS PER HOUR
BLDG	BUILDING
CV	CHECK VALVE
CO	CLEANOUT
COTF	CLEANOUT TO FLOOR
COTG	CLEANOUT TO GRADE
CW	COLD WATER
CD	CONDENSATE DRAIN
CONT.	CONTINUATION
CFH	CUBIC FEET PER HOUR
CFM	CUBIC FEET PER MINUTE
CFS	CUBIC FEET PER SECOND
CF	CUBIC FOOT
(X)	DEMOLISH
DW	DISHWASHER, DOMESTIC WATER
DET	DOMESTIC EXPANSION TANK
DCVA	DOUBLE CHECK VALVE ASSEMBLY
DN	DOWN
DS	DOWNSPOUT
DSN	DOWNSPOUT NOZZLE
D	DRAIN
DFU	DRAINAGE FIXTURE UNIT
DWV	DRAINAGE, WASTE AND VENT
DF	DRINKING FOUNTAIN
EWH	ELECTRIC WATER HEATER
ELECT	ELECTRICAL
EEW	EMERGENCY EYE WASH
ESH	EMERGENCY SHOWER
(E)	EXISTING
EJ	EXPANSION JOINT
FT	FEET
FFE	FINISHED FLOOR ELEVATION
F	FIRE, FAHRENHEIT
FC	FLEXIBLE CONNECTOR
FL	FLOOR
FCO	FLOOR CLEANOUT
FD	FLOOR DRAIN
FS	FLOOR SINK, FLOW SWITCH
FV	FLUSH VALVE
'	FOOT, FEET
(F)	FUTURE
GAL	GALLONS
GPH	GALLONS PER HOUR
GPM	GALLONS PER MINUTE
GWH	GAS WATER HEATER
GW	GREASE WASTE
HD	HEAD, HUB DRAIN
HP	HEAT PUMP, HORSE POWER, HOUSEKEEPING PAD
HVAC	HEATING, VENTILATING AND AIR CONDITIONING
HZ	HERTZ
HB	HOSE BIBB
HW	HOT WATER
HWFU	HOT WATER FIXTURE UNIT
HWR	HOT WATER RETURN
IN, "	INCHES
IW	INDIRECT WASTE
INV	INVERT ELEVATION
KW	KILOWATT
L	LAVATORY
MW	MAKE-UP WATER
MAX	MAXIMUM
HG	MERCURY
MIN	MINIMUM
MX	MIXING VALVE
MS	MOP SINK
MH	MOUNTING HEIGHT, MANHOLE
(N)	NEW
NPCW	NON-POTABLE COLD WATER
NC	NORMALLY CLOSED
NOP	NORMALLY OPEN
N	NORTH
N/A	NOT APPLICABLE
NIC	NOT IN CONTRACT
NTS	NOT TO SCALE
#	NUMBER
NO.	NUMBER
OD	OVERFLOW DRAIN, OUTSIDE DIAMETER
OFCI	OWNER FURNISHED, CONTRACTOR INSTALLED
OFOI	OWNER FURNISHED, OWNER INSTALLED
PH	PHASE
PLBG	PLUMBING
P	PLUMBING, PUMP
POC	POINT OF CONNECTION
PSI	POUNDS PER SQUARE INCH
PD	PRESSURE DROP, PLUMBING DEMOLITION, PUMPED DISCHARGE
PG	PRESSURE GAUGE
PRV	PRESSURE REDUCING VALVE
PS	PRESSURE SWITCH
QTY	QUANTITY
RWL	RAINWATER LEADER
RPBP	REDUCED PRESSURE BACKFLOW PREVENTER
RV	RELIEF VENT, RELIEF VALVE
(R)	RELOCATE / RELOCATED LOCATION
RPM	REVOLUTIONS PER MINUTE
RD	ROOF DRAIN
SAN	SANITARY
SJ	SEISMIC JOINT
SB	SERVICE BOX
SS	SERVICE SINK
SHT	SHEET
SA	SHOCK ARRESTOR
SH	SHOWER
SOV	SHUT OFF VALVE
S, SK	SINK
SF	SQUARE FEET
SD	STORM DRAIN
SP	SUMP PUMP, STATIC PRESSURE
TEMP	TEMPERATURE
T&P	TEMPERATURE AND PRESSURE
T	TEMPERATURE, THERMOMETER
MBH	THOUSAND BTU'S PER HOUR
TP	TRAP PRIMER, TOTAL PRESSURE
TD	TRENCH DRAIN
TYP	TYPICAL
U, UR	URINAL
V	VACUUM, VENT, VOLT
VFD	VARIABLE FREQUENCY DRIVE
VS	VENT STACK
VTR	VENT THRU ROOF
WCO	WALL CLEANOUT
WB	WASHER BOX
W	WASTE
WS	WASTE STACK
WC	WATER COLUMN
WC	WATER COLUMN, WATER CLOSET
WHA	WATER HAMMER ARRESTOR
WH	WATER HEATER, WALL HYDRANT
WSFU	WATER SUPPLY FIXTURE UNIT
W/	WITH

General

- CONTINUATION
- X / X — DETAIL NUMBER AND SHEET LOCATION
- XX-X / LOCATION — EQUIPMENT IDENTIFICATION
- EXTENT OF DEMOLITION
- X — FIXTURE TAG (LEVEL BELOW FIXTURE)
- XX — FOOD SERVICE EQUIPMENT / CALCULATION TAG
- X — KEYED NOTE
- PIPE BELOW GRADE
- POINT OF CONNECTION
- X / XXX — SECTION NUMBER AND SHEET LOCATION
- DEMOLISH
- EXISTING WORK
- NEW WORK
- PIPE OR CONDUIT BELOW GRADE

Piping Fittings

- AP — ACCESS PANEL
- AQUASTAT
- AD — AREA DRAIN
- BLIND FLANGE
- CAP
- CB — CATCH BASIN
- COTG — CLEANOUT TO GRADE
- CONCENTRIC REDUCER
- DSN — DOWNSPOUT NOZZLE
- EXPANSION JOINT
- FLEXIBLE CONNECTION
- FCO — FLOOR CLEANOUT
- FD — FLOOR DRAIN
- FS — FLOOR SINK
- FLOW DIRECTION
- HOSE BIBB / WALL HYDRANT
- HD — HUB DRAIN
- M — METER
- OD — OVERFLOW ROOF DRAIN
- PIPE DROP
- PIPE RISE
- PRESSURE GAUGE WITH COCK
- PUMP
- RD — ROOF DRAIN
- TEE DOWN ON PIPE
- TEE UP ON PIPE
- TP — TRAP PRIMER MANIFOLD
- TRENCH DRAIN
- UNION
- VTR — VENT THROUGH ROOF
- WCO — WALL CLEANOUT

Piping Systems

- T140°HW — 140%%d HOT WATER PIPING
- T140°HWR — 140%%d HOT WATER RETURN PIPING
- COLD WATER PIPING
- CA — COMPRESSED AIR PIPING
- D — CONDENSATE / INDIRECT DRAIN PIPING
- GV — GAS VENT PIPING
- GW — GREASE WASTE ABOVE GRADE OR FINISHED FLOOR
- GW — GREASE WASTE BELOW GRADE OR FINISHED FLOOR
- HOT WATER PIPING
- HOT WATER RETURN PIPING
- 2#G — NATURAL GAS PIPING, 2 LB
- 5#G — NATURAL GAS PIPING, 5 LB
- G — NATURAL GAS PIPING, 7" WC PRESSURE
- OD — OVERFLOW DRAIN PIPING ABOVE GRADE OR FINISHED FLOOR
- PD — PUMPED DISCHARGE
- SANITARY VENT PIPING
- SANITARY WASTE OR SOIL PIPING ABOVE GRADE OR FINISHED FLOOR
- SANITARY WASTE OR SOIL PIPING BELOW GRADE OR FINISHED FLOOR
- SD — STORM DRAIN PIPING ABOVE GRADE OR FINISHED FLOOR
- SD — STORM DRAIN PIPING BELOW GRADE OR FINISHED FLOOR
- TP — TRAP PRIMER PIPING

Valves

- BFP — BACKFLOW PREVENTER
- CHECK VALVE
- EARTHQUAKE GAS VALVE
- HOSE END DRAIN VALVE
- NATURAL GAS PIPING CONNECTION ASSEMBLY
- PRESSURE REDUCING VALVE
- SHUTOFF VALVE, GENERAL

GENERAL PLUMBING NOTES

A. PLUMBING SYSTEM DESIGN, INSTALLATION AND MATERIALS SHALL CONFORM TO THE 2016 CALIFORNIA PLUMBING CODE, LOCAL AMENDMENTS AND ALL APPLICABLE REGULATIONS.

B. CONDITIONS SHOW ON THE PLANS RELATIVE TO THE WORK TO BE PERFORMED ARE BASED ON THE BEST INFORMATION AVAILABLE BUT ARE SUBJECT TO VERIFICATION. VERIFY LOCATIONS AND ELEVATIONS OF UTILITIES TO BE CROSSED OR CONNECTED. CORRECT DEFICIENCIES CAUSED BY FAILURE TO PERFORM SUCH VERIFICATIONS AT NO EXPENSE TO OWNER. IMMEDIATELY NOTIFY ARCHITECT AND ENGINEER OF CONDITION CONFLICT WITH THE DETAILS/PLANS.

C. COORDINATE INSTALLATION OF PIPING BELOW AND ABOVE GRADE WITH STRUCTURAL COMPONENTS AND OTHER SYSTEMS INSTALLATION.

D. COORDINATE FIXTURES, EQUIPMENT, PIPE ROUGH-IN/CONNECTION LOCATIONS AND DRAIN LOCATIONS WITH ARCHITECTURAL DRAWINGS.

E. PIPING ROUTED THROUGH ROOF TO BE INSTALLED PER ARCHITECTURAL REQUIREMENTS (SEE ARCHITECTURAL DETAILS).

F. LOCATE ALL VTR A MINIMUM OF 10'-0" FROM OUTSIDE AIR OPENINGS OF ROOFTOP HVAC EQUIPMENT.

G. LOCATE VALVES FOR SERVICE ACCESSIBILITY. VALVES INSTALLED ABOVE CEILING SHALL BE WITHIN 18" OF CEILING.

H. INSTALL OVERHEAD PIPING AS CLOSE TO STRUCTURE AS POSSIBLE IN AREAS WITH EXPOSED ROOF STRUCTURE.

I. ALL PIPING SHALL BE BRACED TO COMPLY WITH THE FORCES AND DISPLACEMENTS PRESCRIBED IN ASCE 7-10 SECTION 13.3 AS DEFINED IN ASCE 7-10 SECTION 13.6.5.6, 13.6.7, 13.6.8, AND 2016 CBC, SECTIONS 1616A.1.24, 1616A.1.25, AND 1616A.1.26.

J. UNLESS THE STRUCTURAL DRAWINGS HAVE AN ENGINEERED SYSTEM, OR THE CONTRACTOR PROVIDES ENGINEERED SYSTEMS SIGNED BY A CALIFORNIA REGISTERED CIVIL OR STRUCTURAL ENGINEER, SUPPORT AND BRACE DUCTWORK, PIPING, AND APPURTENANCES WITH OSHPD PRE-APPROVED SYSTEMS (WHETHER AN OSHPD PROJECT OR NOT):

1. OPM-0043-13 MASON SEISMIC RESTRAINT COMPONENTS FOR SUSPENDED UTILITIES.
2. OPM 0052-13 EATON/TOLCO SEISMIC BRACING & HANGERS.

K. PROVIDE CLEANOUTS FOR SANITARY WASTE AND STORM DRAINAGE SYSTEMS WHERE SHOWN AND AS OTHERWISE REQUIRED BY CODE.

L. FURNISH AND INSTALL VALVES, TRAPS, STRAINERS, BACK FLOW PREVENTERS, ETC. NOT FURNISHED BY EQUIPMENT SUPPLIER, BUT REQUIRED FOR PROPER EQUIPMENT OPERATION.

M. SHUT-OFF VALVES TO BE INSTALLED IN ALL WATER PIPING. PROVIDE ACCESS PANELS IF CEILING AND STRUCTURAL CONDITIONS DO NOT ALLOW NORMAL ACCESS. COORDINATE EXACT TYPE AND LOCATION WITH OWNER AND GENERAL CONTRACTOR PRIOR TO ROUGH-IN.

N. CONTRACTOR TO PROVIDE LOCATE/SCOPING SERVICES FOR EXISTING PIPING BELOW GRADE AND DOCUMENT/RECORD, COORDINATE WITH NEW WORK PRIOR TO START OF CONSTRUCTION.

O. ROOF PENETRATIONS TO BE MINIMUM 5'-0" CLEAR OF TWO HOUR WALL SEPARATIONS.

P. COORDINATE INSTALLATION OF DUCTWORK, PIPING, FIXTURES, EQUIPMENT, ETC. WITH ARCHITECTURAL, STRUCTURAL, MECHANICAL, ELECTRICAL AND FIRE PROTECTION SYSTEMS PRIOR TO INSTALLATION.

Q. REFER TO ARCHITECTURAL DRAWINGS FOR ADA ACCESSIBILITY REQUIREMENTS.

R. PROVIDE CEILING ACCESS PANELS FOR VALVES LOCATED ABOVE INACCESSIBLE CEILING SYSTEMS. VALVES INSTALLED ABOVE CEILING SHALL BE WITHIN 18" OF CEILING. MAINTAIN FIRE RATINGS WHERE REQUIRED.

S. SEE ARCHITECTURAL DRAWINGS FOR EXACT FIXTURE LOCATIONS.

T. PROVIDE NEW FIXTURES WITH CONNECTION TO ADEQUATELY SIZED EXISTING LINES. SEE PLUMBING FIXTURE SCHEDULE FOR PIPE CONNECTION SIZES.

U. INSTALL INSULATION TO EXPOSED P-TRAP, DRAIN, COLD AND HOT WATER SUPPLY PIPING AT ACCESSIBLE LAVATORIES.

GENERAL DEMOLITION NOTES

A. COORDINATE DEMOLITION, CUTTING, PATCHING, ETC. WITH GENERAL CONTRACTOR AND EXISTING FIELD CONDITIONS PRIOR TO SUBMITTING CONSTRUCTION CONTRACT BIDS. SEE SPECIFICATIONS GENERAL PROVISIONS, NOT ALL PIPING IS ILLUSTRATED.

B. SAW CUTTING OF ANY FLOOR, AND CORE DRILLING HOLES LARGER THAN EIGHT INCHES DIAMETER IN STRUCTURAL WALLS, FLOOR OR ROOF REQUIRES THE APPROVAL OF A STRUCTURAL ENGINEER REGISTERED IN THE STATE OF CALIFORNIA. CONTRACTOR TO RETAIN THE SERVICES OF THE STRUCTURAL ENGINEER FORWARD WET STAMPED STRUCTURAL CALCULATIONS TO THE ARCHITECT PRIOR TO BEGINNING WORK. HOLES SMALLER THAN EIGHT INCHES DIAMETER IN STRUCTURAL WALLS, FLOOR OR ROOF SHALL BE REVIEWED BY ARCHITECT AND AUTHORIZED IN WRITING PRIOR TO BEGINNING OF WORK

C. REFER TO ARCHITECTURAL, STRUCTURAL, MECHANICAL, AND ELECTRICAL DRAWINGS FOR SPACE ALLOCATION BEAM LOCATION AND COORDINATION PURPOSES. CONFLICTS REGARDING SPACE REQUIREMENTS, CLEARANCES, INTERFERENCE WITH STRUCTURE OR OTHER WORK, ETC., SHALL BE DIRECTED TO THE ARCHITECT FOR RESOLUTION PRIOR TO INSTALLATION OF WORK.

D. THE COST OF CUTTING, PATCHING AND PAINTING OF EXISTING WALLS, CEILINGS, AND FLOOR AS REQUIRED TO ACCOMMODATE WORK AS SHOWN OR SPECIFIED HEREIN, SHALL BE INCLUDED IN THE COST OF THE WORK FOR EACH TRADE. EMPLOY SKILLED WORKMEN TO PERFORM CUTTING AND PATCHING AND RESTORE DISTURBED SURFACES TO ORIGINAL CONDITION. THE MATERIALS AND WORKMANSHIP FOR ALL PATCHING SHALL BE AS SPECIFIED IN THE RESPECTIVE SECTIONS OF THE ARCHITECTURAL SPECIFICATIONS, OR AS DIRECTED BY THE ARCHITECT

E. CONTRACTOR SHALL VERIFY AND COORDINATE ALL EXISTING WASTE, VENT AND WATER PIPING TO REMAIN IN SERVICE. EXISTING WASTE, VENT AND WATER PIPING SERVING EXISTING PLUMBING FIXTURES, FLOOR SINK AND FLOOR DRAINS TO BE REMOVED ARE TO BE CAPPED BELOW FLOOR OR REMOVED BACK TO PLUMBING PIPING REMAINING IN SERVICE THEN CAPPED, EXCEPT AS NOTED. CONTRACTOR SHALL REROUTE/REPIPE EXISTING PIPING TO REMAIN AS REQUIRED TO MAINTAIN SERVICE. EXISTING PIPING SERVING OTHER TENANTS/BUILDING SPACES IS TO REMAIN

F. FOR FIXTURE DEMOLITION, REMOVE AND DISPOSE FIXTURE INCLUDING RELATED PIPING AND ACCESSORIES CAP PIPES BEHIND WALL AND ABOVE CEILING. PATCH TO MATCH ADJACENT SURFACES AND HOT WATER SUPPLY PIPING AT ACCESSIBLE LAVATORIES.

SHEET INDEX

P0.01.1	SYMBOLS LIST AND GENERAL NOTES - PLUMBING
P2.30A.1	1ST FLOOR OVERALL PLAN - PLUMBING
P2.30B.1	2ND FLOOR OVERALL PLAN - PLUMBING
P2.33.1	DEMO & NEW - 1ST FLOOR - EAST - CLASSROOM - DRAWING STUDIO - PLUMBING
P2.37.1	DEMO & NEW - 2ND FLOOR - EAST - A&P LAB - PLUMBING
P2.38.1	ATTIC FLOOR PLAN - EAST - PLUMBING
P4.01.1	SCHEDULES - PLUMBING
P5.01.1	DETAILS - PLUMBING

NOLL & TAM ARCHITECTS

729 Heinz Avenue
Berkeley, CA 94710
tel 510.542.2200
fax 510.542.2201

ARCHITECTS SEAL

REGISTERED PROFESSIONAL ENGINEER — RICHARD H. RUSSELL — No. M31923 — MECHANICAL — STATE OF CALIFORNIA

Date Signed: ----

APPROVALS

FILE NUMBER: 07-C1

DIVISION OF THE STATE ARCHITECT

APP# 01-117630

ACS_____FLS_____SSS_____

Date:

PROJECT 2016-0538

CONTACT Thomas de Senna

INTERFACE ENGINEERING

135 Main Street
Suite 400
San Francisco, CA 94105
TEL 415.489.7240
FAX 415.489.7289
www.interfaceengineering.com

PROJECT TITLE

CONTRA COSTA CCD
D-4002
DVC SAN RAMON CAMPUS EXPANSION & RENOVATION

1690 Watermill Rd.
San Ramon, CA 94582

ISSUE TITLE

INCREMENT 1

ISSUE DATE **11/30/2018**

NOLL & TAM JOB NUMBER **21630**

REVISIONS

NO.	DATE	DESCRIPTION

SHEET TITLE

SYMBOLS LIST AND GENERAL NOTES - PLUMBING

SHEET NUMBER

P0.01.1

9/29/2021 2:06:50 PM

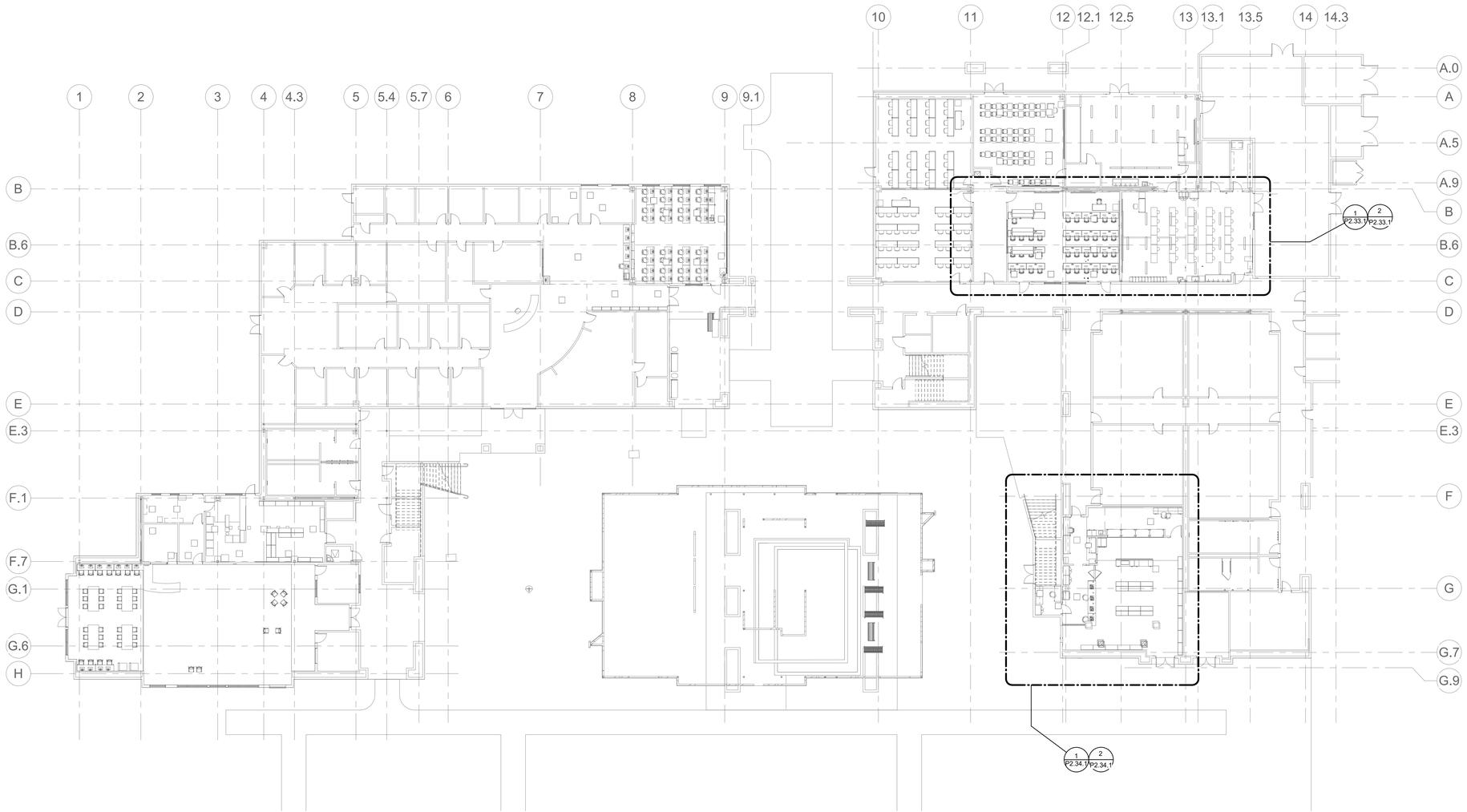

1 1ST FLOOR OVERALL PLAN - PLUMBING

0' 8' 16' 32'

1/16" = 1'-0"

9/29/2021 2:06:55 PM

NOLL & TAM ARCHITECTS

729 Heinz Avenue
Berkeley, CA 94710
tel 510.542.2200
fax 510.542.2201

ARCHITECTS SEAL

REGISTERED PROFESSIONAL ENGINEER
RICHARD H. RUSSELL
No. M31923
MECHANICAL
STATE OF CALIFORNIA

Date Signed: ----

APPROVALS

FILE NUMBER: 07-C1

DIVISION OF THE STATE ARCHITECT

APP# 01-117630

ACS_____ FLS_____ SSS_____

Date:

PROJECT 2016-0538

CONTACT Thomas de Senna

INTERFACE ENGINEERING

135 Main Street
Suite 400
San Francisco, CA 94105
TEL 415.489.7240
FAX 415.489.7289
www.interfaceengineering.com

PROJECT TITLE

CONTRA COSTA CCD

D-4002
DVC SAN RAMON CAMPUS EXPANSION & RENOVATION

1690 Watermill Rd.
San Ramon, CA 94582

ISSUE TITLE

INCREMENT 1

ISSUE DATE	11/30/2018
NOLL & TAM JOB NUMBER	21630

REVISIONS

NO.	DATE	DESCRIPTION

SHEET TITLE

1ST FLOOR OVERALL PLAN - PLUMBING

SHEET NUMBER

P2.30A.1

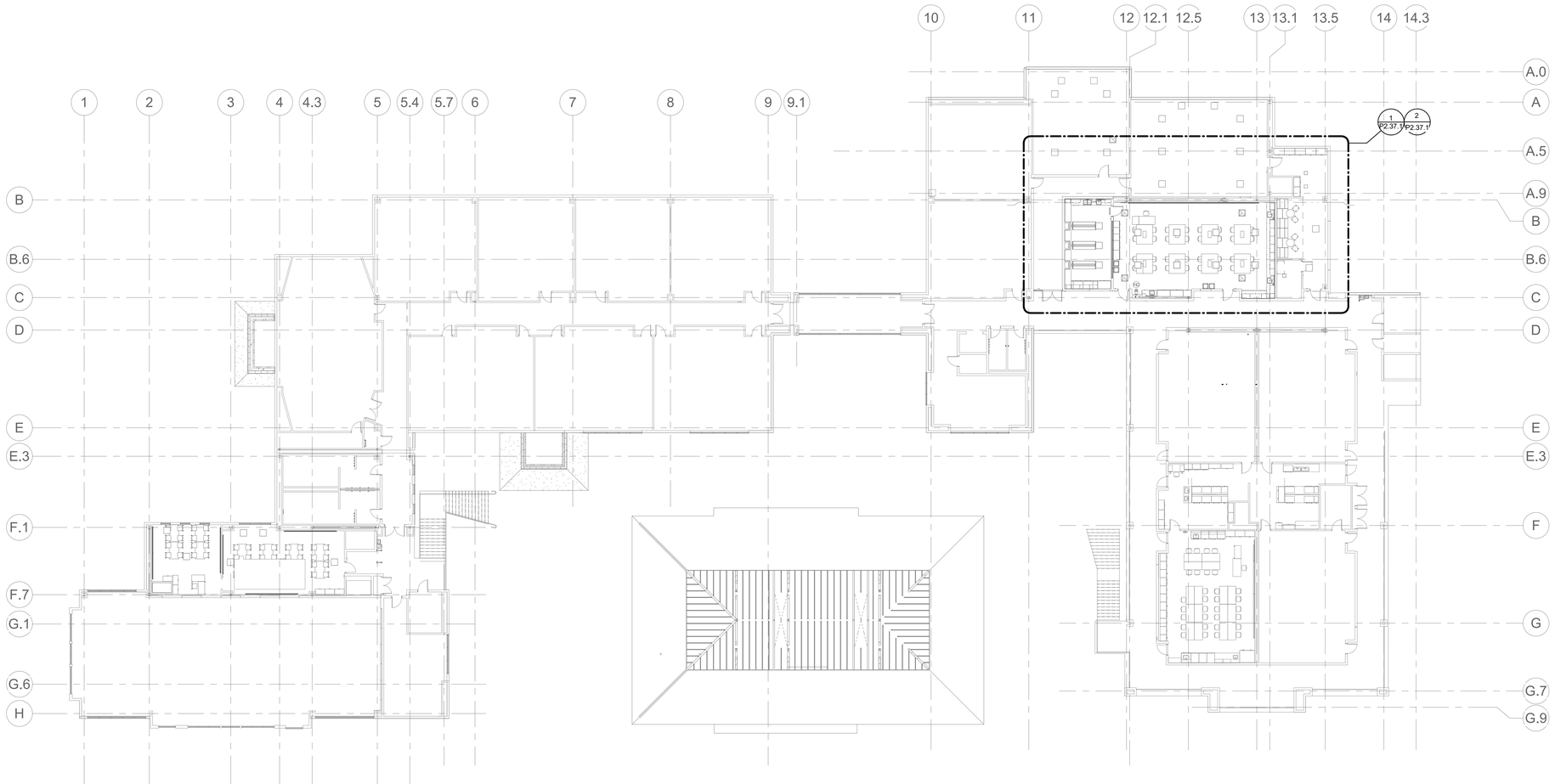

1 2ND FLOOR OVERALL PLAN - PLUMBING

0' 4' 8' 16'

1/16" = 1'-0"

9/29/2021 2:06:58 PM

NOLL & TAM ARCHITECTS

729 Heinz Avenue
Berkeley, CA 94710
tel 510.542.2200
fax 510.542.2201

ARCHITECTS SEAL

REGISTERED PROFESSIONAL ENGINEER
RICHARD H. RUSSELL
No. M31923
MECHANICAL
STATE OF CALIFORNIA

Date Signed: ----

APPROVALS

FILE NUMBER: 07-C1

DIVISION OF THE STATE ARCHITECT

APP# 01-117630

ACS_____ FLS_____ SSS_____

Date:

PROJECT 2016-0538

CONTACT Thomas de Senna

INTERFACE ENGINEERING

135 Main Street
Suite 400
San Francisco, CA 94105
TEL 415.489.7240
FAX 415.489.7289
www.interfaceengineering.com

PROJECT TITLE

CONTRA COSTA CCD

D-4002

DVC SAN RAMON CAMPUS EXPANSION & RENOVATION

1690 Watermill Rd.
San Ramon, CA 94582

ISSUE TITLE

INCREMENT 1

ISSUE DATE	11/30/2018
NOLL & TAM JOB NUMBER	21630

REVISIONS

NO.	DATE	DESCRIPTION

SHEET TITLE

2ND FLOOR OVERALL PLAN - PLUMBING

SHEET NUMBER

P2.30B.1

SHEET KEYNOTES

1. 1/2" CW, 1/2" HW, 1 1/2" V AND 2" W TO SINK ABOVE.
2. PLUG TRENCH DRAIN WASTE CONNECTIONS WITH SCREW IN TEST PLUG AND REPLACE (E) GRATE WITH SOLID GRATE.
3. (E) CLEANOUT TO BE RAISE LEVEL WITH (N) FLOOR.

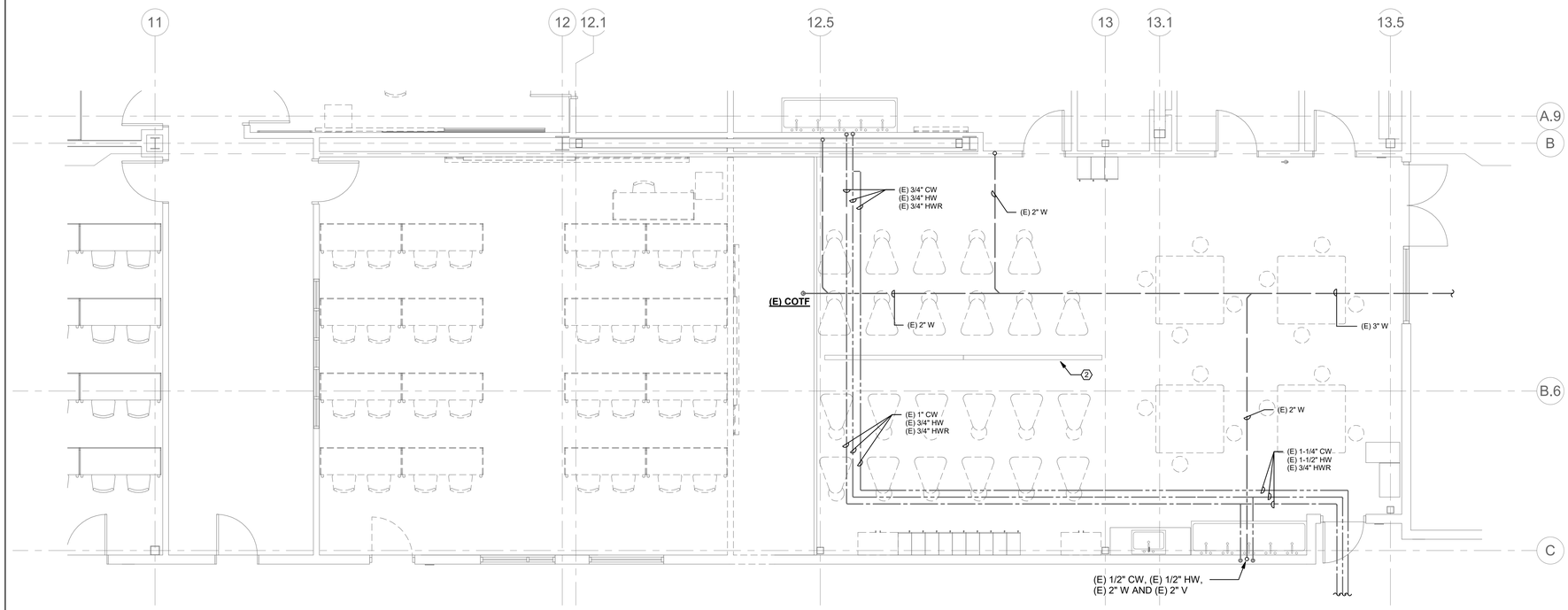

1 DEMO - 1ST FLOOR PLAN - CLASSROOM - CERAMIC STUDIO - PLUMBING

1/4" = 1'-0"

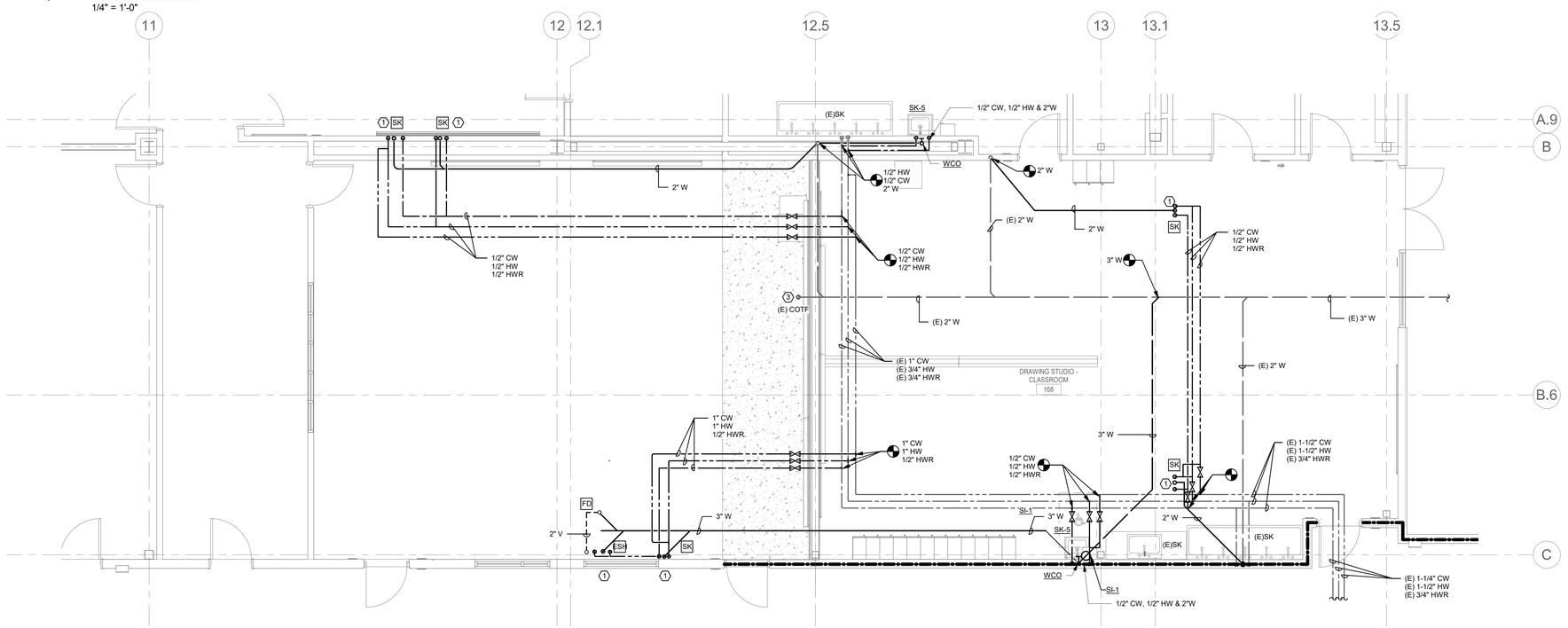

2 NEW - 1ST FLOOR PLAN - CLASSROOM - DRAWING STUDIO - PLUMBING

1/4" = 1'-0"

9/29/2021 2:07:01 PM

NOLL & TAM ARCHITECTS

729 Heinz Avenue
Berkeley, CA 94710
tel 510.542.2200
fax 510.542.2201

ARCHITECTS SEAL

REGISTERED PROFESSIONAL ENGINEER
RICHARD H. RUSSELL
No. M31923
MECHANICAL
STATE OF CALIFORNIA

Date Signed: ----

APPROVALS

FILE NUMBER: 07-C1

DIVISION OF THE STATE ARCHITECT

APP# 01-117630

ACS_____ FLS_____ SSS_____

Date:

PROJECT 2016-0538

CONTACT Thomas de Senna

INTERFACE ENGINEERING

135 Main Street
Suite 400
San Francisco, CA 94105
TEL 415.489.7240
FAX 415.489.7289
www.interfaceengineering.com

PROJECT TITLE

CONTRA COSTA CCD
D-4002
DVC SAN RAMON CAMPUS EXPANSION & RENOVATION

1690 Watermill Rd.
San Ramon, CA 94582

ISSUE TITLE

INCREMENT 1

ISSUE DATE	11/30/2018
NOLL & TAM JOB NUMBER	21630

REVISIONS

NO.	DATE	DESCRIPTION

SHEET TITLE

DEMO & NEW - 1ST FLOOR - EAST - CLASSROOM - DRAWING STUDIO - PLUMBING

SHEET NUMBER

P2.33.1

GENERAL SHEET NOTES

1 PROTECT ALL EXISTING SPRINKLER HEADS TO REMAIN. REMOVE PROTECTIVE COVER(S) ONCE NEW SPRINKLER COMPONENTS ARE INSTALLED.

2 PROTECT EXISTING SPRINKLER PIPING DURING DEMO WORK FOR NEW CONNECTION(S) TO NEW SPRINKLER PIPING.

SHEET KEYNOTES

1 CONNECT TO EXISTING BRANCHLINE WITH A 1-1/4" X 1" MECHANCIAL TEE.

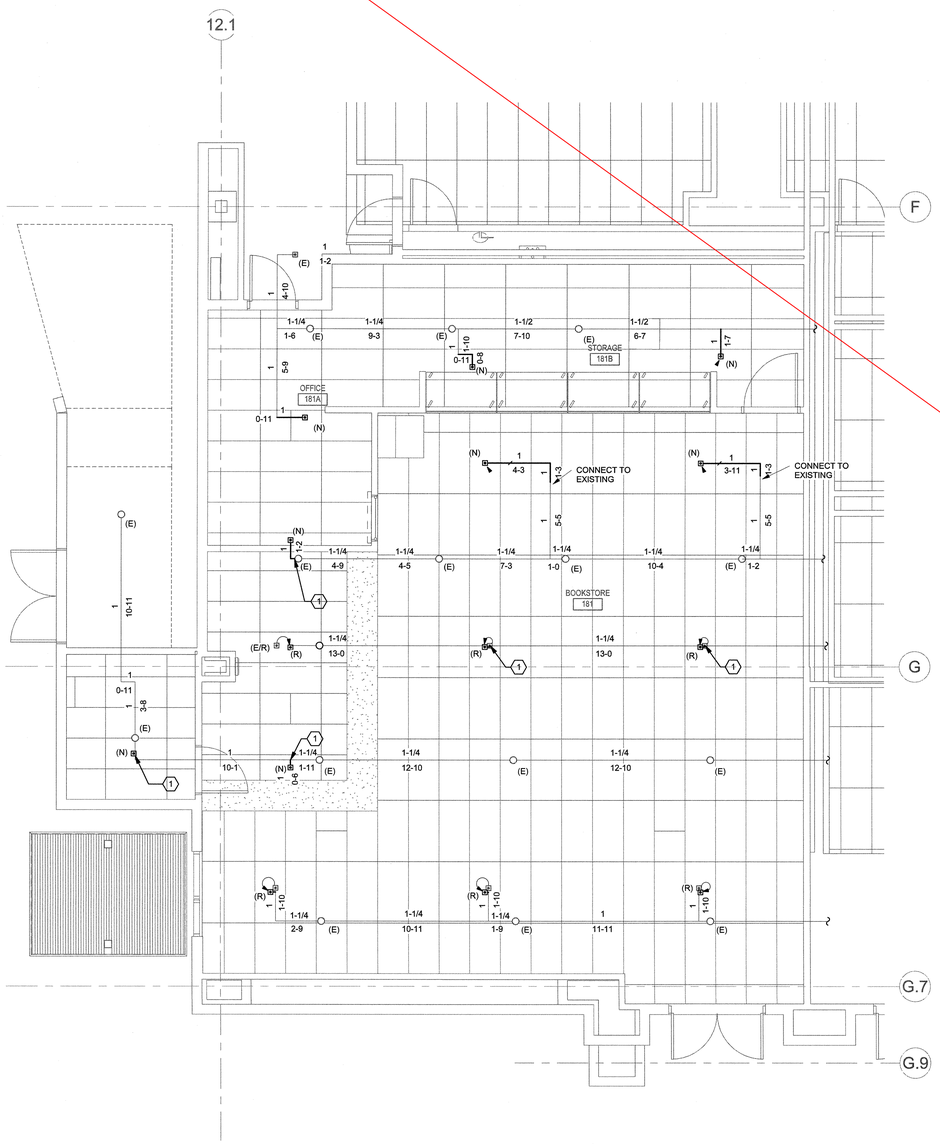

2 NEW - 1ST FLOOR PLAN- BOOKSTORE - FIRE PROTECTION

0' 2' 4' 8'
1/4" = 1'-0"

REMOVED FROM SCOPE CCDA-8

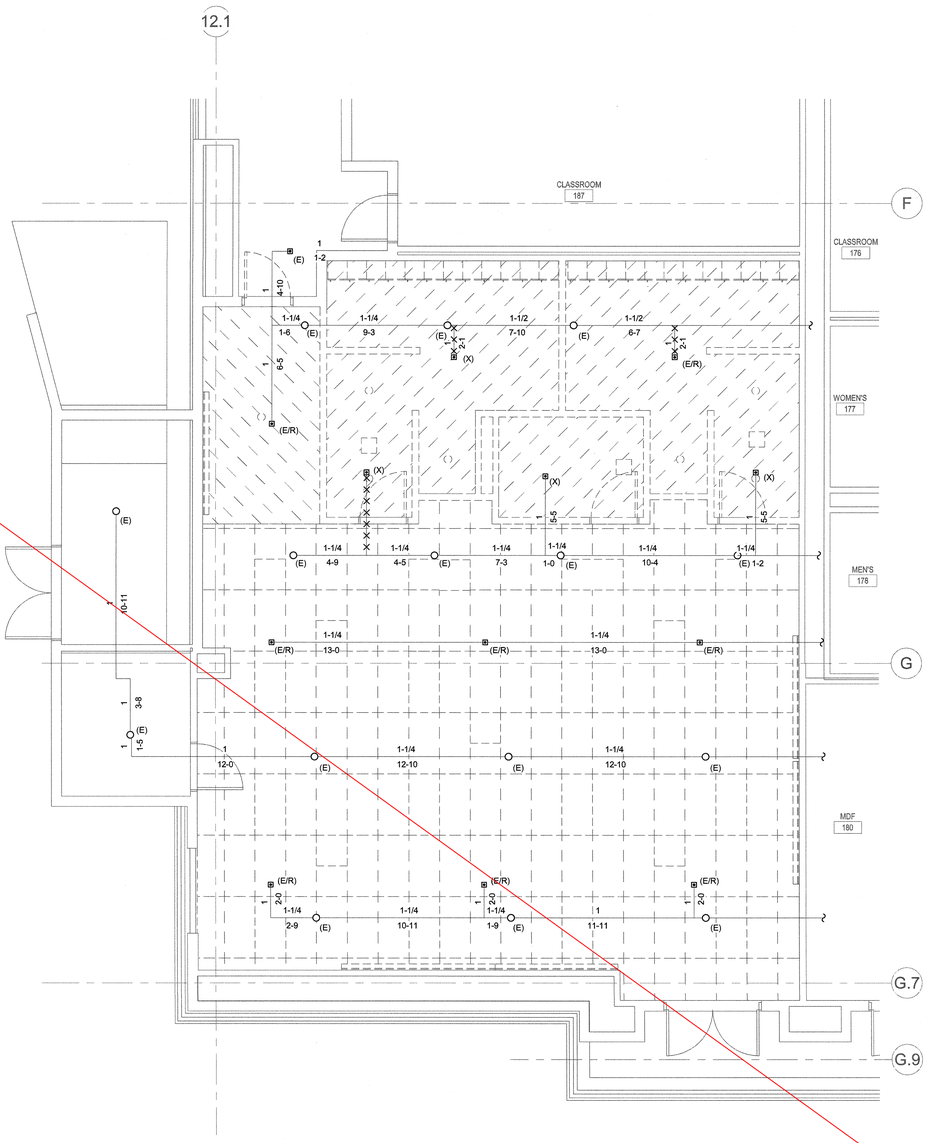

1 DEMO - 1ST FLOOR PLAN - MS TUTORIAL - FIRE PROTECTION

0' 2' 4' 8'
1/4" = 1'-0"

NOLL & TAM ARCHITECTS

729 Heinz Avenue
Berkeley, CA 94710
tel 510.542.2200
fax 510.542.2201

ARCHITECTS SEAL

REGISTERED PROFESSIONAL ENGINEER
RICHARD H. [illegible]
No. M31923
MECHANICAL
STATE OF CALIFORNIA

Date Signed: ----

APPROVALS

FILE NUMBER: 07-C1

DIVISION OF THE STATE ARCHITECT
APP# 01-117630
ACS FLS SSS
Date: OCT 25 2018

PROJECT 2016-0538
CONTACT Alex Bobowiec

INTERFACE ENGINEERING
135 Main Street
Suite 400
San Francisco, CA 94105
TEL 415.489.7240
FAX 415.489.7289
www.interfaceengineering.com

PROJECT TITLE

CONTRA COSTA CCD

DVC SAN RAMON CAMPUS EXPANSION

1690 Watermill Rd.
San Ramon, CA 94582

ISSUE TITLE

INCREMENT 1 - RENOVATION

ISSUE DATE	10/25/2018
NOLL & TAM JOB NUMBER	21630

REVISIONS

NO.	DATE	DESCRIPTION

SHEET TITLE

DEMO & NEW - 1ST FLOOR - EAST - BOOKSTORE - FIRE PROTECTION

SHEET NUMBER

FP2.34.1

10/24/2018 11:17:01 AM

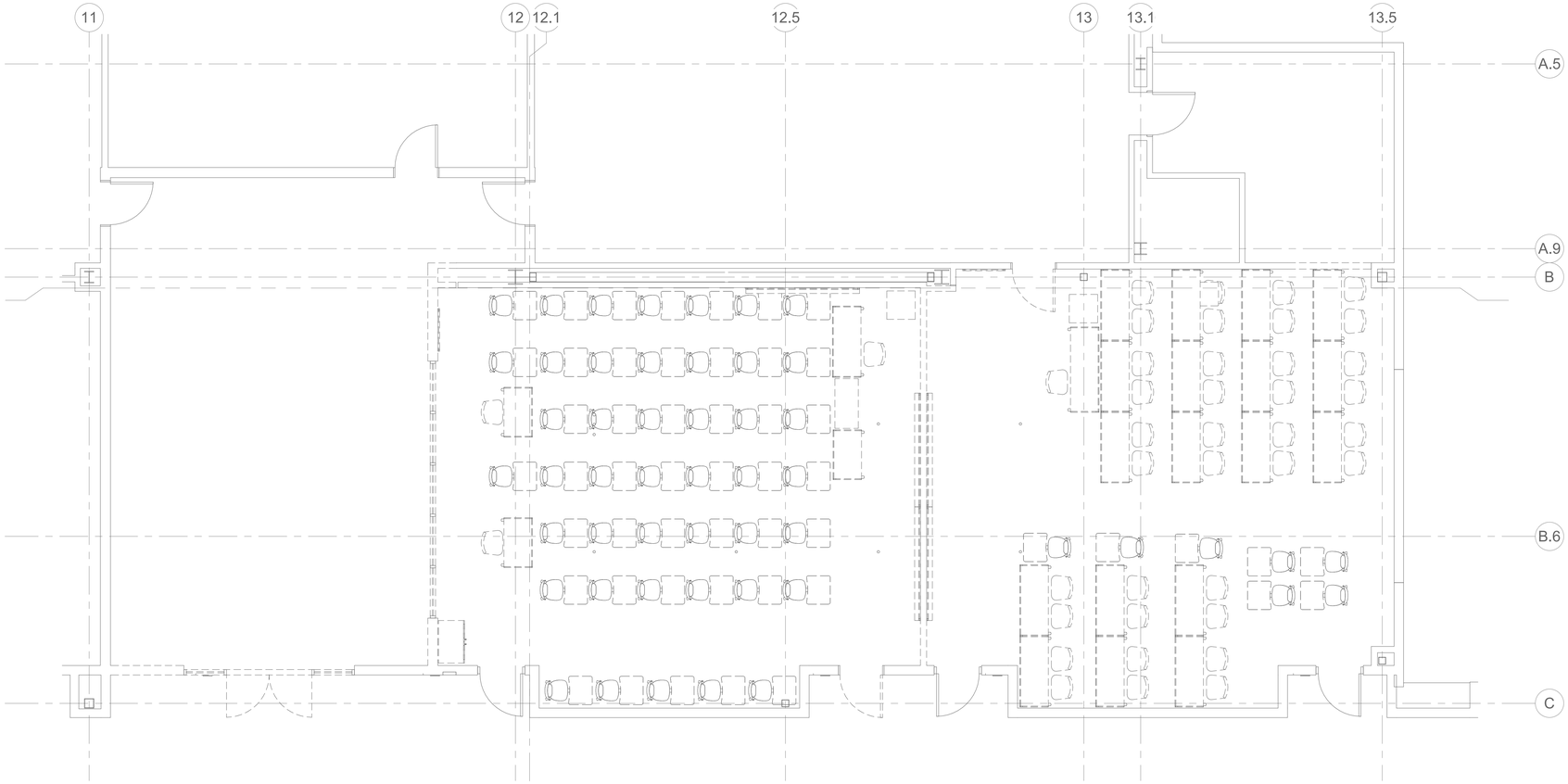

1 DEMO - 2ND FLOOR PLAN - CLASSROOMS - PLUMBING

0' 2' 4' 8'

1/4" = 1'-0"

SHEET KEYNOTES

1. 1/2" CW, 1/2" HW and 2" W from below.
2. Connect to existing 3" VTR.
3. 1" CW and HW from below.

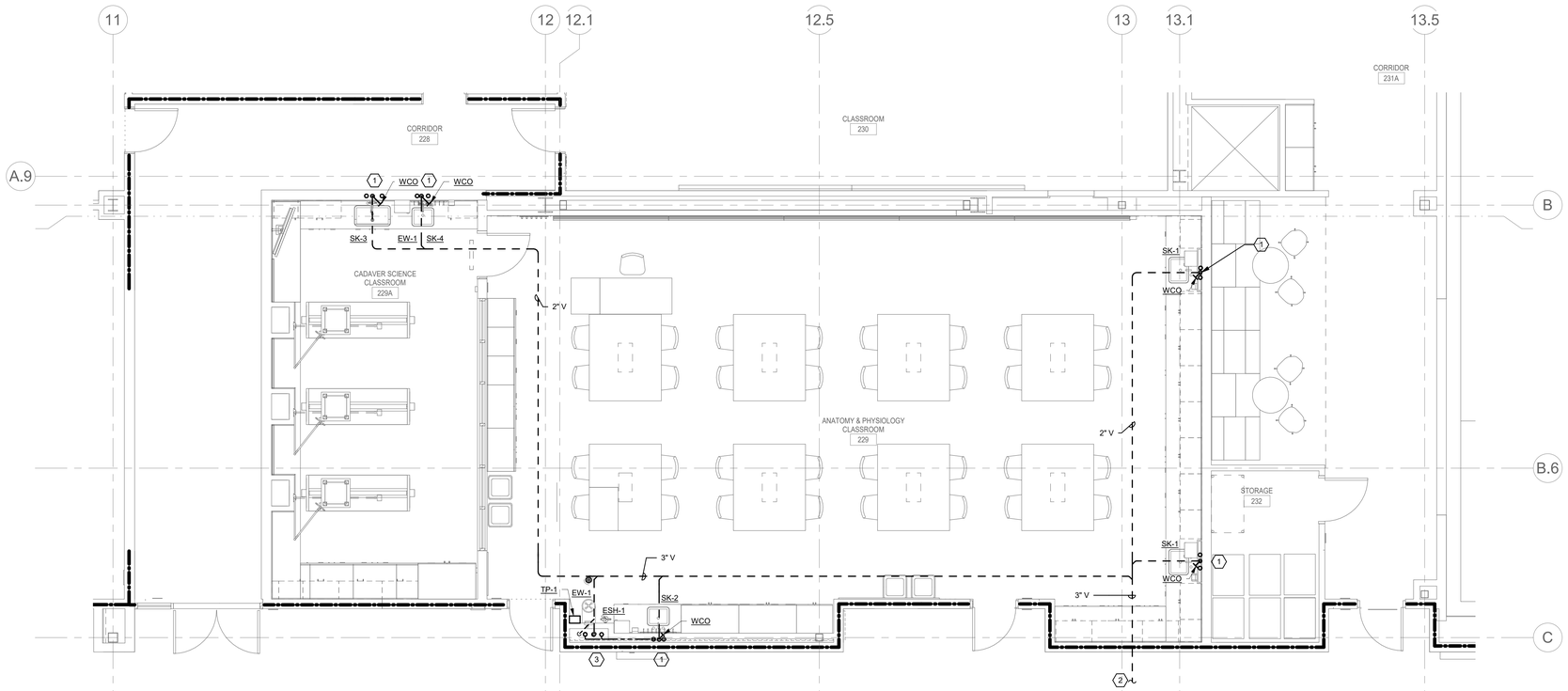

2 NEW - 2ND FLOOR PLAN - A&P LAB - PLUMBING

0' 2' 4' 8'

1/4" = 1'-0"

9/29/2021 2:07:07 PM

NOLL & TAM ARCHITECTS

729 Heinz Avenue
Berkeley, CA 94710
tel 510.542.2200
fax 510.542.2201

ARCHITECTS SEAL

REGISTERED PROFESSIONAL ENGINEER
RICHARD H. RUSSELL
No. M31923
MECHANICAL
STATE OF CALIFORNIA

Date Signed: ----

APPROVALS

FILE NUMBER: 07-C1

DIVISION OF THE STATE ARCHITECT

APP# 01-117630

ACS_____ FLS_____ SSS_____

Date:

PROJECT 2016-0538

CONTACT Thomas de Senna

INTERFACE ENGINEERING

135 Main Street
Suite 400
San Francisco, CA 94105
TEL 415.489.7240
FAX 415.489.7289
www.interfaceengineering.com

PROJECT TITLE

CONTRA COSTA CCD

D-4002

DVC SAN RAMON CAMPUS EXPANSION & RENOVATION

1690 Watermill Rd.
San Ramon, CA 94582

ISSUE TITLE

INCREMENT 1

ISSUE DATE 11/30/2018

NOLL & TAM JOB NUMBER 21630

REVISIONS

NO.	DATE	DESCRIPTION

SHEET TITLE

DEMO & NEW - 2ND FLOOR - EAST - A&P LAB - PLUMBING

SHEET NUMBER

P2.37.1

SHEET KEYNOTES

1. MECHANICAL EQUIPMENT. REFER TO MECHANICAL DRAWINGS FOR EXACT LOCATION.
2. PROVIDE COLD WATER CONNECTION TO AUTOMATIC TRAP PRIMER SERVING (N) FLOOR SINK.
3. CONNECT (N) 3" SS SERVING (N) FLOOR SINK TO (E) SS IN FLOOR BELOW.

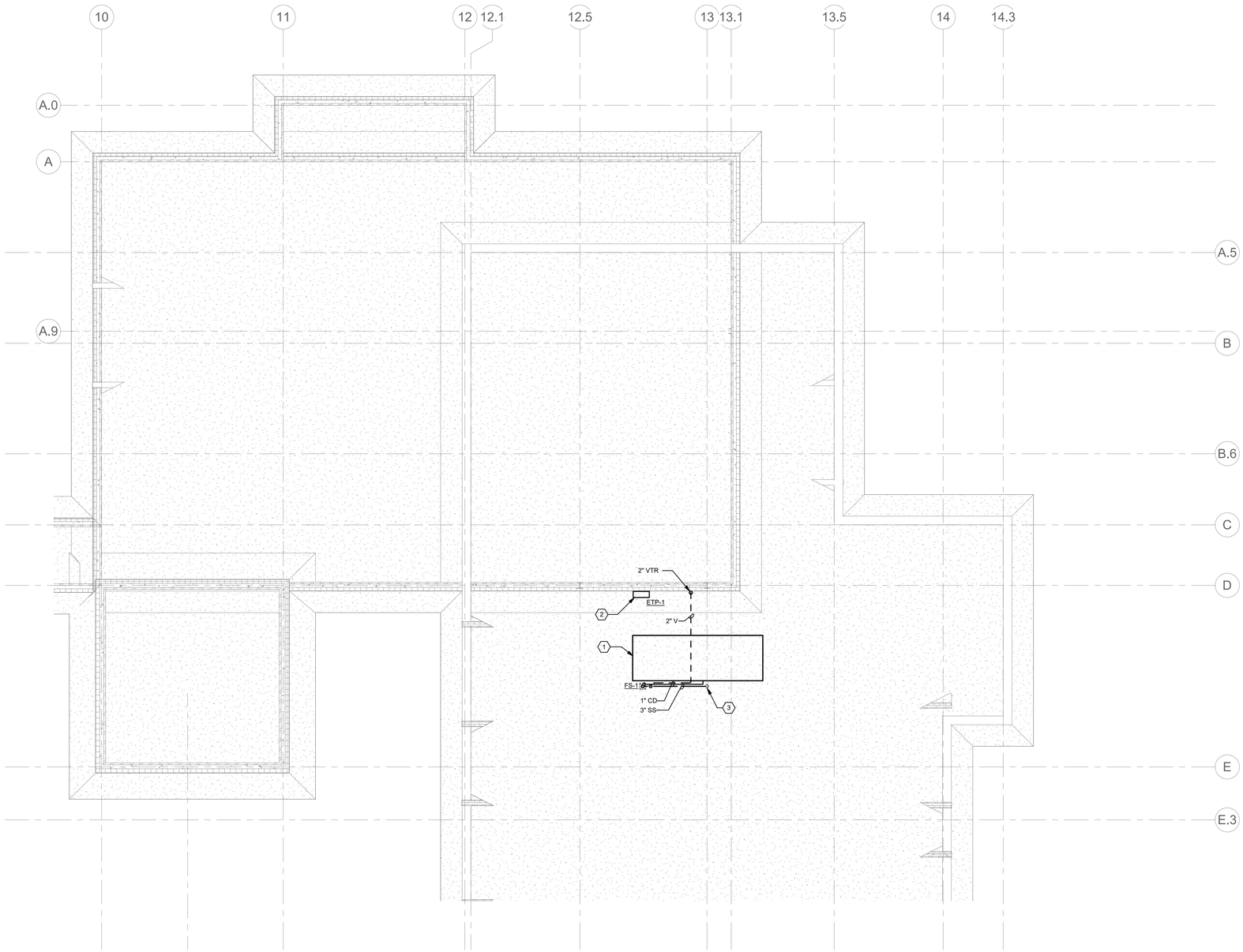

1 PARTIAL ATTIC PLAN - EAST- PLUMBING

0' 4' 8' 16'

1/8" = 1'-0"

NOLL & TAM ARCHITECTS

729 Heinz Avenue
Berkeley, CA 94710
tel 510.542.2200
fax 510.542.2201

ARCHITECTS SEAL

REGISTERED PROFESSIONAL ENGINEER
RICHARD H. RUSSELL
No. M31923
MECHANICAL
STATE OF CALIFORNIA

Date Signed: ----

APPROVALS

FILE NUMBER: 07-C1

DIVISION OF THE STATE ARCHITECT

APP# 01-117630

ACS_____ FLS_____ SSS_____

Date:

PROJECT 2016-0538

CONTACT Thomas de Senna

INTERFACE ENGINEERING

135 Main Street
Suite 400
San Francisco, CA 94105
TEL 415.489.7240
FAX 415.489.7289
www.interfaceengineering.com

PROJECT TITLE

CONTRA COSTA CCD

D-4002
DVC SAN RAMON CAMPUS EXPANSION & RENOVATION

1690 Watermill Rd.
San Ramon, CA 94582

ISSUE TITLE

INCREMENT 1

ISSUE DATE	11/30/2018
NOLL & TAM JOB NUMBER	21630

REVISIONS

NO.	DATE	DESCRIPTION

SHEET TITLE

ATTIC FLOOR PLAN - EAST - PLUMBING

SHEET NUMBER

P2.38.1

9/29/2021 2:07:08 PM

PLUMBING FIXTURE SCHEDULE

SYMBOL	FIXTURE TYPE	DESCRIPTION	BASIS OF DESIGN			CONNECTION				NOTES
			MFR	MODEL	ACCESSORIES	W	V	CW	HW	
ESH-1	EMERGENCY SHOWER / EYE WASH (ADA)	COMBINATION DRENCH SHOWER/EYEWASH UNIT, BARRIER FREE	GUARDIAN	GBF1670 & GBF1721				1"	1"	W/ THERMOSTATIC MIXING VALVE, MOUNTING HEIGHT & MAX WEIGHT: REFER TO LAB DRAWINGS
EW-1	FOLD DOWN EYE WASH	BARRIER-FREE	GUARDIAN	GBF1849LH-L				1"	1"	W/ THERMOSTATIC MIXING VALVE
SI-1	SOLIDS INTERCEPTOR		JAY R SMITH	8710		2"				
SK-1	SINK	EPOXY LAB SINK, REFER TO LAB DRAWINGS FOR ADDITIONAL INFORMATION		INTEGRAL COUNTER	FAUCET: WATERSAVER LA412VB-BH, SWING GOOSENECK WITH PADDLES LEVER HANDLE, STAINLESS STEEL DRAIN BODIES, FINE STAINLESS STEEL MESH STRAINER	2"	1-1/2"	3/4"	3/4"	W/ THERMOSTATIC MIXING VALVE
SK-2	SINK (ACCESSIBLE)	EPOXY LAB SINK, REFER TO LAB DRAWINGS FOR ADDITIONAL INFORMATION		INTEGRAL COUNTER	FAUCET: WATERSAVER LA412VB-BH, SWING GOOSENECK WITH PADDLE HANDLES STAINLESS STEEL DRAIN BODIES, FINE STAINLESS STEEL MESH STRAINER	2"	1-1/2"	3/4"	3/4"	W/ THERMOSTATIC MIXING VALVE
SK-3	SINK	EPOXY DEEP LAB SINK, REFER TO LAB DRAWINGS FOR ADDITIONAL INFORMATION		INTEGRAL COUNTER	FAUCET: T&S MPY-8DWN-08-CR, DECK MOUNT SPACE SAVER PRE-RINSE SPRAYER AND FAUCET WITH PADDLE HANDLES LEVER HANDLE, STAINLESS STEEL DRAIN BODIES, FINE STAINLESS STEEL MESH STRAINER	2"	1-1/2"	3/4"	3/4"	W/ THERMOSTATIC MIXING VALVE
SK-4	SINK (ACCESSIBLE)	EPOXY DEEP LAB SINK, REFER TO LAB DRAWINGS FOR ADDITIONAL INFORMATION		INTEGRAL COUNTER	FAUCET: SLOAN EAF700-LT CP, MOTION SENSOR, 0.5 GPM, STAINLESS STEEL DRAIN BODIES, FINE STAINLESS STEEL MESH STRAINER	2"	1-1/2"	3/4"	3/4"	W/ THERMOSTATIC MIXING VALVE
SK-5	SINK (ACCESSIBLE)	WALL MOUNT, STAINLESS STEEL,	ELKAY	WCL1923OSDC	FAUCET: CHICAGO 1100-GN8AE35-317-AB, SWING GOOSENECK WITH WRISTBLADES, 1.5 GPM, OFFSET GRID STRAINER, JAY R SMITH 0805 FLOOR MOUNTED LAVATORY SUPPORTS	2"	1-1/2"	1/2"	1/2"	W/ THERMOSTATIC MIXING VALVE, MOUNTING HEIGHT: 31", MAX. WEIGHT: 23 LBS

EQUIPMENT SCHEDULE

SYMBOL	EQUIPMENT TYPE	LOCATION / SERVING	BASIS OF DESIGN		CAPACITY	ELECTRICAL			COMMENTS
			MFR	MODEL		VOLTS	PH	AMPS	
ETP-1	ELECTRONIC TRAP PRIMER	ATTIC - EAST	PPP	SMP-500-115V	-	115	1	-	

NOTES:

NOLL & TAM ARCHITECTS

729 Heinz Avenue
Berkeley, CA 94710
tel 510.542.2200
fax 510.542.2201

ARCHITECTS SEAL

REGISTERED PROFESSIONAL ENGINEER
RICHARD H. RUSSELL
No. M31923
MECHANICAL
STATE OF CALIFORNIA

Date Signed: ----

APPROVALS

FILE NUMBER: 07-C1

DIVISION OF THE STATE ARCHITECT

APP# 01-117630

ACS_____FLS_____SSS_____

Date:

PROJECT 2016-0538

CONTACT Thomas de Senna

INTERFACE ENGINEERING

135 Main Street
Suite 400
San Francisco, CA 94105
TEL 415.489.7240
FAX 415.489.7289
www.interfaceengineering.com

PROJECT TITLE

CONTRA COSTA CCD

D-4002
DVC SAN RAMON CAMPUS EXPANSION & RENOVATION

1690 Watermill Rd.
San Ramon, CA 94582

ISSUE TITLE

INCREMENT 1

ISSUE DATE **11/30/2018**

NOLL & TAM JOB NUMBER **21630**

REVISIONS

NO.	DATE	DESCRIPTION

SHEET TITLE

SCHEDULES - PLUMBING

SHEET NUMBER

P4.01.1

9/29/2021 2:07:09 PM

CAJ 1575

System No. C-AJ-1575

Classified by Underwriters Laboratories, Inc. to UL 1479 and CAN/ULC-S115

ANSI/UL1479 (ASTM E814)	CAN/ULC S115
F Ratings — 2 and 3 Hr (See Item 4B)	F Ratings — 2 and 3 Hr (See Item 4B)
T Rating — 0 Hr	FT Rating — 0 Hr
W Rating — Class 1 (See Item 4)	FH Ratings — 2 and 3 Hr (See Item 4B)
	FTH Rating — 0 Hr

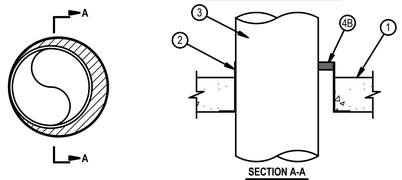

SECTION A-A

1. Floor or Wall Assembly — Min 2-1/2 in. (64 mm) thick reinforced lightweight or normal weight (100-150 pcf or 1600-2400 kg/m3) concrete. Wall may also be constructed of any UL Classified Concrete Blocks*. Floor may also be constructed of any min 6 in. (152 mm) thick UL Classified hollow core Precast Concrete Units*. Max diam of opening is 30-7/8 in. (784 mm) when concrete floor or wall is used and max 7 in. (178 mm) when precast concrete units are used.
   See Concrete Blocks (CAZT) and Precast Concrete Units (CFTV) categories in the Fire Resistance Directory for names of manufacturers.

1A. Floor Assembly - (Optional - Not Shown) — The fire rated unprotected concrete and steel floor assembly shall be constructed of the materials and in the manner specified in the individual D900 Series designs in the UL Fire Resistance Directory and as summarized below:
   A. Concrete — Min 2-1/2 in. (114 mm) thick reinforced lightweight or normal weight (100-150 pcf or 1600-2400 kg/m3) concrete.
   B. Steel Floor and Form Units* — Composite or non-composite max 3 in. (76 mm) deep galv steel fluted units as specified in the individual Floor-Ceiling Design.

2. Steel Sleeve — See Table in Item 4B for when sleeve is required. Also not required for hollow core precast concrete floors. Schedule 10 (or heavier) steel sleeve cast or grouted into floor or wall assembly. Sleeve may extend a max of 8 in. (203 mm) above top of floor or beyond either surface of wall. As an alternate, in floors only, min 26 gauge galvanized sheet steel sleeve provided with a min. 26 gauge galvanized steel square flange spot welded to the bottom of the sleeve and sized to be a min of 2 in. (51 mm) larger than the sleeve diam. The sheet metal sleeve is to be cast in place and may extend a max of 2 in. (51 mm) above the top surface of the concrete floor, except that when sleeve is greater than nom 13 in. (330 mm) diam, sleeve shall be installed flush with both surfaces of floor.

3. Through-Penetrants — One metallic pipe, conduit or tubing to be installed either concentrically or eccentrically within the firestop system. The annular space between pipe, conduit or tubing and periphery of opening or sleeve shall be min 0 in. (point contact). See Table in Item 4B for max annular space. Pipe, conduit or tubing to be rigidly supported on both sides of floor or wall assembly. The following types and sizes of metallic pipes, conduits or tubing may be used:
   A. Steel Pipe — Nom 30 in. (762 mm) diam (or smaller) Schedule 10 (or heavier) steel pipe.
   B. Iron Pipe — Nom 30 in. (762 mm) diam (or smaller) cast or ductile iron pipe.
   C. Conduit — Nom 6 in. (152 mm) diam (or smaller) rigid steel conduit.
   D. Conduit — Nom 4 in. (102 mm) diam (or smaller) electrical metallic tubing (EMT).
   E. Copper Tubing — Nom 6 in. (152 mm) diam (or smaller) Type L (or heavier) copper tubing.
   F. Copper Pipe — Nom 6 in. (152 mm) diam (or smaller) regular (or heavier) copper pipe.

Hilti Firestop Systems

Reproduced by HILTI, Inc. Courtesy of Underwriters Laboratories, Inc. February 20, 2015

CAJ 1575

System No. C-AJ-1575

4. Firestop System — The firestop system shall consist of the following:
   A. Packing Material — (Not Shown.) - Min 1 in. (25 mm) thickness of polyethylene backer rod, mineral wool batt or glass fiber insulation firmly packed into opening as a permanent form. Packing material to be recessed from top or bottom surface of floor/sleeve or from both surfaces of wall/sleeve to accommodate the required thickness of fill material (Item 4B). Packing material is required as specified in Table below.
   A1. Forming Materials* — (Optional, Not Shown) As an alternate to Item 4A, min 1 in. (25 mm) thickness of forming material to be foamed into the opening as a permanent form. Forming material to be recessed from top or bottom surface of floor/sleeve or from both surfaces of wall/sleeve to accommodate the required thickness of fill material (Item 4B).
   HILTI CONSTRUCTION CHEMICALS, DIV OF HILTI INC — CF812 or CF-AS CJP Foam Sealant
   A2. Packing Material — (Not Shown.) - For W Rating, floors only, min 4 in. thick, min 4 pcf (64 kg/m3) mineral batt insulation tightly packed into sleeve and recessed from top of sleeve to accommodate the required thickness of fill material.
   B. Fill, Void or Cavity Materials* — Sealant — Applied to fill the annular space flush with top or bottom surface of floor/sleeve. In hollow core precast concrete floors, fill material to be installed flush with the bottom of the floor. Fill material may optionally be installed flush with the top of the assembly. In wall assemblies, fill material to be installed symmetrically on both sides of wall or floor, flush with wall/sleeve or floor surface. In wall assemblies, an additional bead of fill material shall be applied at the point contact location between penetrant and sleeve or between penetrant and concrete, at top surface of floor/sleeve and at both surfaces of wall/sleeve. The bead shall be min 1/2 in. (13 mm) diam and shall extend over the point contact location to the 1/4 in. (6 mm) annular space. For W Rating, fill material to be installed flush with top of sleeve only and an additional min 1/2in. (13 mm) bead of sealant shall be applied at the sleeve/concrete interface on the top surface of the floor. The min required fill material thickness and the location of the sealant at top or bottom of floor opening are dependent upon a number of parameters, as shown in the table below.
   HILTI CONSTRUCTION CHEMICALS, DIV OF HILTI INC — FS-ONE Sealant or FS-ONE MAX Intumescent Sealant

Note: W Rating applies only when FS-ONE MAX Intumescent Sealant is used.

Min Floor or Wall Thick, In. (mm)	Nom Diam of Copper Pipe or Tube In. (mm)	Nom Diam of Steel/Iron Pipe or Conduit In. (mm)	Max Annular Space In. (mm)	Min Sealant Thick. In. (mm)	Sealant Flush with Top or Bottom	Sleeve	Packing	F Rating Hr
2-1/2 (64)	¼ - 4(13 - 102)	½ - 30 (13 - 762)	7/8 (22)	½ (13)	Top	No	No	2
2-1/2 (64)	¼ - 4(13 - 102)	½ - 8(13 - 203)	2-7/8 (73)	1 (25)	Top	Yes	No	2
2-1/2 (64)	¼ - 4(13 - 102)	½ - 8(13 - 203)	1-7/8 (48)	½ (13)	Top	Yes	No	2
2-1/2 (64)	¼ - 4(13 - 102)	½ - 12(13 - 305)	7/8 (22)	1 (25)	Bottom	Yes	No	2
2-1/2 (64)	¼ - 4(13 - 102)	½ - 8(13 - 203)	2-7/8 (73)	1 (25)	Top	Optional	Yes	2
2-1/2 (64)	¼ - 6(13 - 152)	½ - 30 (13 - 762)	2-7/8 (73)	1 (25)	Top	Yes	Yes	2
4-1/2 (114)	¼ - 4(13 - 102)	½ - 10(13 - 254)	3-1/4 (83)	1 (25)	Bottom	No	No	3
4-1/2 (114)	¼ - 4(13 - 102)	½ - 30(13 - 762)	7/8 (22)	½ (13)	Top	No	No	3
4-1/2 (114)	¼ - 4(13 - 102)	½ - 8(13 - 203)	1-7/8 (48)	½ (13)	Bottom	No	No	2

* Indicates such products shall bear the UL or cUL Certification Mark for jurisdictions employing the UL or cUL Certification (such as Canada), respectively.

Hilti Firestop Systems

Reproduced by HILTI, Inc. Courtesy of Underwriters Laboratories, Inc. February 20, 2015

UL/cUL SYSTEM NO. F-A-1137

CAST IRON FLOOR SINK THROUGH CONCRETE FLOOR OVER METAL DECKING ASSEMBLY

F-RATING = 2-HR.
T-RATING = 2-HR.
L-RATING AT AMBIENT = LESS THAN 1 CFM / SQ FT
L-RATING AT 400°F = 4 CFM / SQ FT

FA1137c061519

1. STEEL FLOOR UNIT/FLOOR ASSEMBLY (UL D700 OR D900 SERIES) - LIGHTWEIGHT OR NORMAL WEIGHT CONCRETE (MINIMUM 2-1/2" THICK) (2-HR. FIRE-RATING).
2. MAXIMUM 12" x 12" x 10" DEEP CAST IRON FLOOR SINK CAST OR GROUTED INTO FLOOR. SINK FLANGES TO BEAR ON TOP PLANE OF FLOOR. CAST IRON FLOOR GRATING TO BE INSTALLED ON TOP OF SINK. METAL DOME STRAINER MAY BE USED IN SINK DRAIN.
3. MAXIMUM 4" NOMINAL DIAMETER CAST IRON PIPE SECURED TO OUTLET OF FLOOR SINK WITH NO-HUB COUPLING. PIPE TO BE RIGIDLY SUPPORTED BENEATH FLOOR AWAY FROM FLOOR SINK WITH SUITABLE HANGERS.
4. CORRUGATED STAINLESS STEEL "NO-HUB" CONNECTOR.
5. MINIMUM 1/2" BEAD HILTI FS-ONE MAX OR FS-ONE INTUMESCENT FIRESTOP SEALANT APPLIED AROUND PERIPHERY OF FLOOR SINK AT FLOOR INTERFACE.

CONFIGURATION A

6. TWO LAYERS (NOMINAL 1-1/2" THICK) FACED OR UNFACED FIREMASTER FAST WRAP XL, FIREMASTER FASTWRAP+, OR PYROSCAT DUCTWRAP XL (MANUFACTURED BY THERMAL OR FYREWRAP DUCT INSULATION OR FYREWRAP DUCT 1.5 INSULATION (MANUFACTURED BY UNIFRAX LLC), TIGHTLY WRAPPED AROUND SINK AND DRAIN PIPE. TOP ENDS OF BOTH LAYERS TO BE CUT TO THE CONTOUR OF THE FLUTED DECK AND EXTEND MINIMUM 24" BEYOND THE BOTTOM SURFACE OF FLOOR AND HELD IN POSITION USING 16 GA. STEEL WIRE TIES SPACED MAXIMUM 8" ON CENTER AND MAXIMUM 1" FROM ENDS OF LAYERS. AN ADDITIONAL LAYER OF DUCT WRAP CUT TO THE CONTOUR OF THE FLUTED DECK AND EXTEND MINIMUM 6" BELOW FLOOR AND HELD IN POSITION USING 16 GA. STEEL TIE WIRES SPACED MAXIMUM 1" FROM ENDS OF LAYER.

CONFIGURATION B

6. TWO LAYERS (NOMINAL 1-1/2" THICK) FACED OR UNFACED FIREMASTER FAST WRAP XL, FIREMASTER FASTWRAP+, OR PYROSCAT DUCTWRAP XL (MANUFACTURED BY THERMAL OR FYREWRAP DUCT INSULATION OR FYREWRAP DUCT 1.5 INSULATION (MANUFACTURED BY UNIFRAX LLC), TIGHTLY WRAPPED AROUND SINK AND DRAIN PIPE AND EXTEND MINIMUM 24" BEYOND THE BOTTOM SURFACE OF FLOOR AND HELD IN POSITION USING 16 GA. STEEL WIRE TIES SPACED MAXIMUM 8" ON CENTER AND MAXIMUM 1" FROM ENDS OF LAYERS. AN ADDITIONAL LAYER OF DUCT WRAP TO EXTEND MINIMUM 6" BELOW FLOOR AND HELD IN POSITION USING 16 GA. STEEL TIE WIRES SPACED MAXIMUM 1" FROM ENDS OF LAYER.
7. ADDITIONAL PIECES OF (NOMINAL 1-1/2" THICK) FACED OR UNFACED FIREMASTER FAST WRAP XL, FIREMASTER FASTWRAP+, OR PYROSCAT DUCTWRAP XL (MANUFACTURED BY THERMAL OR FYREWRAP DUCT INSULATION OR FYREWRAP DUCT 1.5 INSULATION (MANUFACTURED BY UNIFRAX LLC), CUT TO CONTOUR OF FLUTE AND FRICTION FIT TO FILL THE SPACE BETWEEN THE DUCT WRAP LAYERS (ITEM NO. 6) AND FLUTED DECK. RECESS INSULATION TO ACCOMMODATE FIRESTOP SEALANT.
8. MINIMUM 1/4" DEPTH HILTI FS-ONE MAX OR FS-ONE INTUMESCENT FIRESTOP SEALANT APPLIED OVER THE DUCT WRAP WITHIN FLUTED AREA FLUSH WITH OUTER LAYER.

Hilti Firestop Systems

HILTI, Inc.
Plano, Texas USA (800) 879-8000

Sheet: 2 of 2
Scale: -
Date: Aug. 15, 2019

Drawing No.: FA 1137d

Saving Lives through Innovation and Education

UL/cUL SYSTEM NO. F-A-1137

CAST IRON FLOOR SINK THROUGH CONCRETE FLOOR OVER METAL DECKING ASSEMBLY

F-RATING = 2-HR.
T-RATING = 2-HR.
L-RATING AT AMBIENT = LESS THAN 1 CFM / SQ FT
L-RATING AT 400°F = 4 CFM / SQ FT

FA1137c061519

TOP VIEW | SECTION A-A | SECTION B-B

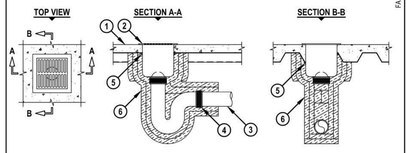

CONFIGURATION A

TOP VIEW | SECTION A-A | SECTION B-B

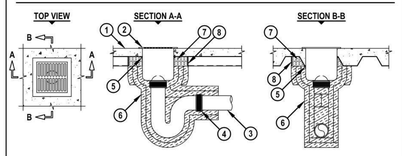

CONFIGURATION B

Hilti Firestop Systems

HILTI, Inc.
Plano, Texas USA (800) 879-8000

Sheet: 1 of 2
Scale: 1/16" = 1"
Date: Aug. 15, 2019

Drawing No.: FA 1137d

Saving Lives through Innovation and Education

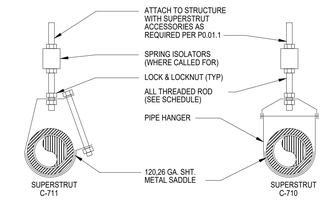

PIPE SIZE (IN)	MAX SUPPORT SPAN (FT)	MIN. ROD SIZE (IN)
UP TO 1"	7	3/8"
1-1/2"	9	3/8"
2 TO 2-1/2"	10	3/8"
3"	12	1/2"
3-1/2"	13	1/2"
4	14	5/8"

1 PIPE HANGING DETAILS

NO SCALE

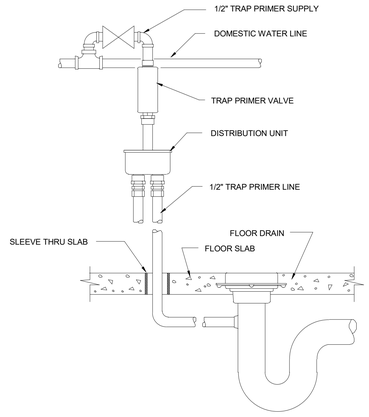

2 TRAP SEAL PRIMER DETAIL

NO SCALE

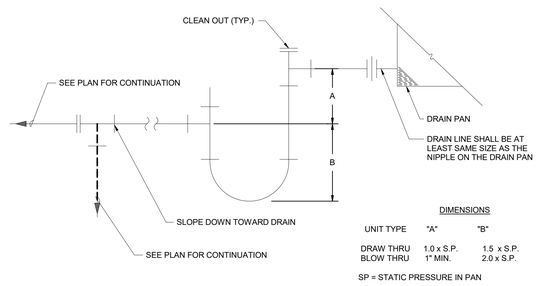

DIMENSIONS

UNIT TYPE	"A"	"B"
DRAW THRU	1.0 x S.P.	1.5 x S.P.
BLOW THRU	1" MIN.	2.0 x S.P.

SP = STATIC PRESSURE IN PAN

3 CONDENSATE TRAP

NO SCALE

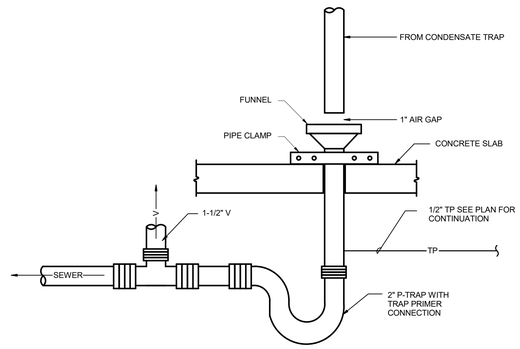

4 DRAIN STANDPIPE DETAIL

NO SCALE

NOLL & TAM ARCHITECTS
729 Heinz Avenue
Berkeley, CA 94710
tel 510.542.2200
fax 510.542.2201

ARCHITECTS SEAL

REGISTERED PROFESSIONAL ENGINEER
RICHARD H. RUSSELL
No. M31923
MECHANICAL
STATE OF CALIFORNIA

Date Signed: ----

APPROVALS

FILE NUMBER: 07-C1

DIVISION OF THE STATE ARCHITECT
APP# 01-117630
ACS_____ FLS_____ SSS_____
Date:

PROJECT 2016-0538
CONTACT Thomas de Senna

INTERFACE ENGINEERING
135 Main Street
Suite 400
San Francisco, CA 94105
TEL 415.489.7240
FAX 415.489.7289
www.interfaceengineering.com

PROJECT TITLE

CONTRA COSTA CCD
D-4002
DVC SAN RAMON CAMPUS EXPANSION & RENOVATION

1690 Watermill Rd.
San Ramon, CA 94582

ISSUE TITLE
INCREMENT 1

ISSUE DATE **11/30/2018**
NOLL & TAM JOB NUMBER **21630**

REVISIONS

NO.	DATE	DESCRIPTION

SHEET TITLE
DETAILS - PLUMBING

SHEET NUMBER
P5.01.1

9/29/2021 2:07:10 PM

MECHANICAL SYMBOL LIST

NOTE: This is a standard symbol list and not all items listed may be used.

Abbreviations

(E)	EXISTING
(N)	NEW
(R)	RELOCATE/RELOCATED LOCATION
A/C	AIR CONDITION(ED)
AD	ACCESS DOOR
AHU	AIR HANDLING UNIT
BDD	BACKDRAFT DAMPER
CD	CEILING DIFFUSER
CD	CONDENSATE DRAIN
CONT.	CONTINUATION
COP	COEFFICIENT OF PERFORMANCE
CW	COLD WATER
D	DROP
DB	DECIBEL
DB	DRY BULB
DIA	DIAMETER
DX	DIRECT EXPANSION
EAT	ENTERING AIR TEMPERATURE
EER	ENERGY EFFICIENCY RATING
EF	EXHAUST FAN
EFF	EFFICIENT
EL	ELEVATION
ELECT	ELECTRICAL
EWT	ENTERING WATER TEMPERATURE
EXH	EXHAUST
F	FAHRENHEIT
FC	FLEXIBLE CONNECTOR
FD	FIRE DAMPER
FLA	FULL LOAD AMPS
FPM	FEET PER MINUTE
FPS	FEET PER SECOND
FT	FEET
GAL	GALLONS
GPH	GALLONS PER HOUR
GPM	GALLONS PER MINUTE
HD	HEAD
HP	HORSEPOWER
HTG	HEATING
HTR	HEATER
HWC	HOT WATER COIL
ID	INSIDE DIAMETER
IN	INCHES
LAT	LEAVING AIR TEMPERATURE
LBS.	POUNDS
LWT	LEAVING WATER TEMPERATURE
MA	MIXED AIR
MAX	MAXIMUM
MBH	THOUSAND BTU'S PER HOUR
MD	MOTORIZED DAMPER
MH	MOUNTING HEIGHT
MIN	MINIMUM
MS	MOTOR STARTER
MW	MAKE-UP WATER
N/A	NOT APPLICABLE
NC	NOISE CRITERIA
NIC	NOT IN CONTRACT
NO.	NUMBER
NTS	NOT TO SCALE
OA	OUTSIDE AIR
OBD	OPPOSED BLADE DAMPER
OC	ON CENTER
OD	OUTSIDE DIAMETER
P	PUMP
PD	PRESSURE DROP
PH	PHASE
PRV	PRESSURE REDUCING VALVE
PSI	POUNDS PER SQUARE INCH
QTY	QUANTITY
R	RISE
RA	RETURN AIR
REF	REFRIGERANT
RET	RETURN
RH	RELATIVE HUMIDITY
RL	REFRIGERANT LIQUID
RLD	RELIEF DAMPER
RPM	REVOLUTIONS PER MINUTE
RS	REFRIGERANT SUCTION
SA	SUPPLY AIR
SEER	SEASONAL ENERGY EFFICIENCY RATING
SF	SQUARE FEET
SH	SENSIBLE HEAT
SOV	SHUT OFF VALVE
SP	STATIC PRESSURE
T, TEMP	TEMPERATURE
TD	TEMPERATURE DIFFERENCE
TH	TOTAL HEAT
TP	TOTAL PRESSURE
UD	UNDERCUT DOOR
V	VOLT
VAV	VARIABLE AIR VOLUME
VD	VOLUME DAMPER (HAND OPERATOR)
VEL	VELOCITY
W/	WITH
W	WATT
WB	WET BULB
WC	WATER COLUMN

Dampers

FD FD FIRE DAMPER
FSD FSD FIRE/SMOKE DAMPER
MD MD MOTORIZED DAMPER
SD SD SMOKE DAMPER
VOLUME DAMPER

Diffusers and Grilles

EXHAUST AIR
RETURN AIR
SUPPLY AIR
12x12 / 100 CD-1 DIFFUSER OR GRILLE IDENTIFICATION

Ductwork Fittings

ACOUSTICALLY LINED DUCT (SIZES SHOWN ARE NET INSIDE)
BELLMOUTH
CONCENTRIC SQUARE TO ROUND
CONCENTRIC TRANSITION, RECTANGULAR OR ROUND
ECCENTRIC TRANSITION, RECTANGULAR OR ROUND
FLEXIBLE CONNECTION
MITERED ELBOW WITH TURNING VANES
NON-SYMMETRICAL WYE
RADIUSED ELBOW
RECTANGULAR DUCT DROP
RECTANGULAR DUCT RISER
RECTANGULAR MAIN WITH RECTANGULAR BRANCH
RECTANGULAR MAIN WITH ROUND BRANCH
RECTANGULAR OFFSET LESS THAN 15°
RECTANGULAR OFFSET MORE THAN 15°
ROUND DUCT DROP
ROUND DUCT RISER
ROUND DUCT WITH ROUND BRANCH
ROUND WYE
SYMMETRICAL WYE

Equipment

CHILLER, AIR COOLED
CHILLER, WATER COOLED
COOLING TOWER

General

DEMOLISH

EXISTING WORK
NEW WORK
LIMIT OF DEMOLITION
POINT OF CONNECTION

Piping Fittings, Appurtenances and Equipment

S AIR SEPARATOR
AUTOMATIC AIR VENT
BFP BACKFLOW PREVENTER
CAP
CONTINUATION
EJ EXPANSION JOINT
EXPANSION LOOP
ET EXPANSION TANK
F FLOW SWITCH
HE HEAT EXCHANGER
HOSE BIBB
MANUAL AIR VENT
PIPE BELOW GRADE
PIPE DROP
PIPE REMOVED IN DEMOLITION
PIPE RISE
PIPE TO DRAIN
PRESSURE GAUGE WITH COCK
PRESSURE RELIEF VALVE
P PRESSURE SENSOR
PUMP
S SHOCK ABSORBER
T&P RELIEF VALVE WITH PIPE TO DRAIN
TEE DOWN ON PIPE
TEE UP ON PIPE
T TEMPERATURE SENSOR
TEST PORT (PETE'S PLUG OR EQUAL)
THERMOMETER
VENT TO ATMOSPHERE
M WATER METER

Piping Systems

CHWR	CHILLED WATER RETURN
CHWS	CHILLED WATER SUPPLY
CWR	CONDENSER WATER RETURN
CWS	CONDENSER WATER SUPPLY
HWR	HEATING WATER RETURN
HWS	HEATING WATER SUPPLY
RL	REFRIGERANT LIQUID
RS	REFRIGERANT SUCTION

Piping Valves

BALANCING VALVE
CHECK VALVE
CONTROL VALVE
GATE VALVE
GLOBE VALVE
PRESSURE REDUCING VALVE
QUARTER TURN VALVE
VALVE, GENERAL

GENERAL SEISMIC BRACING REQUIREMENTS

A. PROVIDE SEISMIC BRACING OF HVAC EQUIPMENT, DUCTWORK, AND PIPING IN ACCORDANCE WITH THE REQUIREMENTS OF THE LATEST BUILDING CODE WITH AN IMPORTANCE FACTOR IDENTIFIED ON ARCHITECTURAL AND STRUCTURAL DOCUMENTS.

B. REFER TO STRUCTURAL DRAWINGS FOR CONCRETE ANCHOR TYPE AND INSTALLATION REQUIREMENTS.

C. SUBMIT SEISMIC BRACING DETAILS FOR REVIEW.

D. UNLESS THE STRUCTURAL DRAWINGS HAVE AN ENGINEERED SYSTEM, OR THE CONTRACTOR PROVIDES ENGINEERED SYSTEMS SIGNED BY A CALIFORNIA REGISTERED CIVIL OR STRUCTURAL ENGINEER, SUPPORT AND BRACE DUCTWORK, PIPING, AND APPURTENANCES WITH OSHPD PRE-APPROVED SYSTEMS (WHETHER AN OSHPD PROJECT OR NOT):

1. OPM-0043-13 MASON SEISMIC RESTRAINT COMPONENTS FOR SUSPENDED UTILITIES, OR EQUAL.
2. OPM-0052-13 EATON/TOLCO SEISMIC BRACING & HANGERS

E. WITHOUT ANY EXCEPTIONS, BRACE EVERY RUN OF DUCT DESIGNED TO CARRY TOXIC OR EXPLOSIVE GASES, OR USED FOR SMOKE CONTROL OR PRESSURIZATION AIR. FOR OTHER DUCTWORK BRACE EVERY RUN OF DUCT WITH A CROSS SECTIONAL AREA OF LARGER THAN 6 SQ.FT., EXCEPT THAT BRACING OF DUCTWORK WITH SUPPORT ROD LENGTH LESS THAN 12 INCHES IS NOT REQUIRED. ROD LENGTH SHALL BE AS MEASURED FROM TOP OF DUCT TO BOTTOM OF SUPPORT WHERE THE HANGER IS ATTACHED. SEISMIC BRACING, WHERE SHOWN ON DRAWINGS, IS THE MINIMUM REQUIRED; PROVIDE ADDITIONAL BRACING AS REQUIRED BY OPM-0043-13, OR EQUAL.

F. WHERE BRACING IS REQUIRED, BRACE DUCTWORK FOR EACH STRAIGHT RUN OF DUCT WITH THE FOLLOWING REQUIREMENTS (SEE OPM-0043-13 FOR ADDITIONAL REQUIREMENTS):

1. LONGITUDINAL BRACING: MINIMUM 1, WITH MAXIMUM SPACING OF 60'.
2. TRANSVERSE BRACING: MINIMUM TWO, WITH MAXIMUM SPACING OF 30', AT END OF DUCT RUNS HAVING MIN OF 2 SUPPORTS, AND AT EVERY DROP OR RISE EXCEPT FOR CONNECTION TO DIFFUSERS WHERE THE ELEVATION CHANGE OF CONNECTING DUCTWORK IS LESS THAN 24 INCHES.

GREEN BUILDING REQUIREMENTS

A. CONTRACTOR SHALL EXECUTE A CONSTRUCTION WASTE MANAGEMENT PLAN IN COMPLIANCE WITH THE GREEN BUILDING REQUIRED MEASURES OF 2016 CALIFORNIA GREEN BUILDING STANDARDS CODE.

B. CONTRACTOR SHALL PROTECT DUCT OPENINGS AND MECHANICAL EQUIPMENT DURING CONSTRUCTION IN COMPLIANCE WITH THE GREEN BUILDING REQUIRED MEASURES OF 2016 CALIFORNIA GREEN BUILDING STANDARDS CODE.

C. CONTRACTOR SHALL ONLY USE ADHESIVES, SEALANTS, & CAULKS IN COMPLIANCE WITH THE GREEN BUILDING REQUIRED MEASURES OF 2017 CALIFORNIA GREEN BUILDING STANDARDS CODE.

D. CONTRACTOR SHALL PAINTS AND COATINGS IN COMPLIANCE WITH THE GREEN BUILDING REQUIRED MEASURES OF 2016 CALIFORNIA GREEN BUILDING STANDARDS CODE.

E. CONTRACTOR SHALL NOT USE CFC'S NOR HALONS IN COMPLIANCE WITH THE GREEN BUILDING REQUIRED MEASURES OF 2016 CALIFORNIA GREEN BUILDING STANDARDS CODE.

DSA COMPONENT ANCHORAGE NOTES

A. ALL MECHANICAL, PLUMBING, AND ELECTRICAL COMPONENTS SHALL BE ANCHORED AND INSTALLED PER THE DETAILS ON THE DSA APPROVED CONSTRUCTION DOCUMENTS. WHERE NO DETAIL IS INDICATED, THE FOLLOWING COMPONENTS SHALL BE ANCHORED OR BRACED TO MEET THE FORCE AND DISPLACEMENT REQUIREMENTS PRESCRIBED IN THE 2016 CBC, SECTIONS 1616A.1.18 THROUGH 1616A.1.26, AND ASCE 7-10 CHAPTER 13, 26 AND 30.

1. ALL PERMANENT EQUIPMENT AND COMPONENTS.
2. TEMPORARY OR MOVABLE EQUIPMENT THAT IS PERMANENTLY ATTACHED (E.G. HARD WIRED) TO THE BUILDING UTILITY SERVICES SUCH AS ELECTRICITY, GAS OR WATER.
3. MOVABLE EQUIPMENT WHICH IS STATIONED IN ONE PLACE FOR MORE THAN 8 HOURS AND HEAVIER THAN 400 POUNDS ARE REQUIRED TO BE ANCHORED WITH TEMPORARY ATTACHMENTS.

B. THE FOLLOWING MECHANICAL AND ELECTRICAL COMPONENTS SHALL BE POSITIVELY ATTACHED TO THE STRUCTURE, BUT THE ATTACHMENT NEED NOT BE DETAILED ON THE PLANS. THESE COMPONENTS SHALL HAVE FLEXIBLE CONNECTIONS PROVIDED BETWEEN THE COMPONENTS AND ASSOCIATED DUCTWORK, PIPING, AND CONDUIT.

1. COMPONENTS WEIGHING LESS THAN 400 POUNDS AND HAVE A CENTER OF MASS LOCATED 4 FEET OR LESS ABOVE THE ADJACENT FLOOR OR ROOF LEVEL THAT DIRECTLY SUPPORT THE COMPONENT.
2. COMPONENTS WEIGHING LESS THAN 20 POUNDS, OR IN THE CASE OF DISTRIBUTED SYSTEMS, LESS THAN 5 POUNDS PER FOOT, WHICH ARE SUSPENDED FROM A ROOF OR FLOOR OR HUNG FROM A WALL.

C. FOR THOSE ELEMENTS THAT DO NOT REQUIRE DETAILS ON THE APPROVED DRAWINGS, THE INSTALLATION SHALL BE SUBJECT TO THE APPROVAL OF THE STRUCTURAL ENGINEER OF RECORD AND THE DSA DISTRICT STRUCTURAL ENGINEER. THE PROJECT INSPECTOR WILL VERIFY THAT ALL COMPONENTS AND EQUIPMENT HAVE BEEN ANCHORED IN ACCORDANCE WITH ABOVE REQUIREMENTS.

PIPING, DUCTWORK, AND ELECTRICAL DISTRIBUTION SYSTEM BRACING NOTE

A. ALL PIPING AND DUCTWORK DISTRIBUTION SYSTEMS SHALL BE BRACED TO COMPLY WITH THE FORCES AND DISPLACEMENTS PRESCRIBED IN ASCE 7-10 SECTION 13.3 AS DEFINED IN ASCE 7-10 SECTION 13.6.8, 13.6.7, 13.6.5.6, AND 2016 CBC, SECTIONS 1616A.1.23, 1616A.1.24, 1616A.1.25 AND 1616A.1.26.

B. UNLESS THE STRUCTURAL DRAWINGS HAVE AN ENGINEERED SYSTEM, OR THE CONTRACTOR PROVIDES ENGINEERED SYSTEMS SIGNED BY A CALIFORNIA REGISTERED CIVIL OR STRUCTURAL ENGINEERS, SUPPORT AND BRACE DUCTWORK, PIPING AND APPURTENANCES WITH OSHPD PRE-APPROVED SYSTEMS (WHETHER AN OSHPD PROJECT OR NOT):

1. OPM-0043-13 MASON SEISMIC RESTRAINT COMPONENTS FOR SUSPENDED UTILITIES.
2. OPM 0052-13 EATON/TOLCO SEISMIC BRACING & HANGERS.

C. COPIES OF THE MANUAL SHALL BE AVAILABLE ON THE JOBSITE PRIOR TO THE START OF HANGING AND BRACING OF THE PIPE, DUCTWORK, AND ELECTRICAL DISTRIBUTION SYSTEMS.

GENERAL MECHANICAL NOTES

A. PROVIDE MISCELLANEOUS METALS AND MATERIALS FOR A COMPLETE INSTALLATION (IE. SUPPORT, BRACING, ETC.)

B. PROVIDE EQUIPMENT SUBMITTAL, FOR REVIEW, IN ACCORDANCE WITH THE SPECIFICATIONS. DO NOT DELIVER TO THE JOB SITE ANY PRODUCTS WITHOUT PRIOR REVIEW BY THE ARCHITECT. SUBMIT ALL REQUIRED SUBMITTALS AT ONE TIME. AT CONTRACTOR'S OPTION, 3 SEPARATE SUBMITTALS MAY BE SUMBITTED, CONSISTING OF: UNDERGROUND WORK, BUILDING WORK, AND BUILDING AUTOMATION SYSTEM - DEVIATIONS WILL BE RETURNED WITHOUT REVIEW. INCOMPLETE SUBMITTALS WILL BE RETURNED WITHOUT REVIEW. ENGINEER WILL PROVIDE MAXIMUM OF TWO REVIEWS OF SUBMITTAL PACKAGE. ARRANGE FOR ADDITIONAL REVIEWS AND/OR EARLY REVIEW OF LONG-LEAD ITEMS AND BEAR COSTS OF THESE ADDITIONAL REVIEWS AT ENGINEER'S STANDARD HOURLY RATES. SUBSTITUTION REQUESTS WILL NOT BE REVIEWED AFTER AWARD OF CONTRACT.

C. PROVIDE SMOKE DETECTORS IN MAIN SUPPLY AIR DUCT OF ANY SUPPLY AIR SYSTEM WITH AIR QUANTITY OF MORE THAN 2000 CFM OR OF SUPPLY AIR SYSTEMS WHERE THE COMBINED SUPPLY AIR QUANTITY OF SUPPLY AIR SYSTEMS SUPPLYING AIR INTO ONE ZONE EXCEED 2000 CFM, OR FOR SYSTEMS SHARING A COMMON RETURN AIR PLENUM/DUCT WHERE THE COMBINED SUPPLY AIR QUANTITY OF SUPPLY AIR SYSTEMS EXCEED 2000 CFM. DETECTORS MUST BE COMPATIBLE WITH THE BUILDING FIRE ALARM SYSTEM. DUCT SMOKE DETECTORS TO BE FURNISHED BY DIVISION 28 OR 26 AND INSTALLED BY DIVISION 23.

D. WHERE COMBINATION FIRE AND SMOKE DAMPER IS SHOWN IMMEDIATELY BEHIND A WALL MOUNTED GRILLE AND THERE IS INSUFFICIENT ACCESS AT DUCTWORK, ENLARGE THE WIDTH OF THE GRILLE AND FSD BY A MINIMUM OF 6 INCHES, OR AS OTHERWISE REQUIRED BY FSD MANUFACTURER, AND PROVIDE A "FRONT ACCESS" FSD FOR ACCESS TO FSD COMPONENTS FROM FACE OF GRILLE. INSTALL GRILLE FLUSH WITH WALL SURFACE AND LOCATE DAMPER ACTUATOR OUTSIDE OF THE AIRSTREAM. FSD'S SHALL BE RUSKIN FSD-60FA OR EQUAL.

E. PRIOR TO SUBMISSION OF BID, REVIEW A COMPLETE SET OF CONSTRUCTION DOCUMENTS (INCLUDING ALL OTHER TRADES). INCLUDE ADDITIONAL PIPE OR DUCT OFF-SETS THAT MAY BE REQUIRED TO CLEAR STRUCTURE, FINISHES OR WORK OF OTHER TRADES. FIELD VERIFY EXACT LOCATION AND SIZES OF EXISTING UTILITIES, THE PROPOSED POINT OF CONNECTIONS TO EXISTING SYSTEMS, AND NEW ROUTINGS. EXTRA PAYMENT WILL NOT BE ALLOWED FOR WORK RESULTING FROM LACK OF APPRAISAL OF ENTIRE SCOPE OF WORK PRIOR TO BID. SYSTEM LAYOUTS AS INDICATED ON DRAWINGS ARE GENERALLY DIAGRAMMATIC BUT SHALL BE FOLLOWED AS CLOSELY AS ACTUAL CONSTRUCTION WILL PERMIT.

F. PROVIDE DUCT ACCESS DOORS FOR EQUIPMENT AND DEVICES REQUIRING ACCESS OR RESETTING (IE. FIRE AND SMOKE DAMPERS, SMOKE DAMPERS, SENSORS, ETC.) INDICATE SIZE AND LOCATION ON COORDINATED SHOP DRAWINGS.

G. FLASH AND COUNTER FLASH ALL ROOF PENETRATIONS TO SEAL WEATHER TIGHT (SEE ARCHITECTURAL ROOFING DETAILS AND SPECIFICATIONS).

H. PROVIDE DUCTWORK AND TRANSITIONS EQUAL TO DUCT FREE AREA SHOWN ON DRAWINGS, TO PREVENT A SPATIAL CONFLICT. AT CONTRACTOR'S OPTION AND IF SPATIAL CONSTRAINTS ALLOW IT, ROUND SPIRAL DUCTWORK, OF EQUAL CROSS-SECTIONAL AREA OR LARGER, MAY BE USED IN LIEU OF RECTANGULAR DUCTWORK WHERE SHOWN ON PLANS.

I. PROVIDE FIELD INSTALLED OR MANUFACTURER'S REFRIGERANT LINE SETS BETWEEN THE SPLIT SYSTEMS' INDOOR AND OUTDOOR COMPONENTS. SIZING, QUANTITY, AND INSTALLATION OF PIPES SHALL BE PER MANUFACTURER'S RECOMMENDATIONS BASED ON ACTUAL FIELD INSTALLED LENGTH. PROVIDE HARD WIRED THERMOSTATS AND CONTROL WIRING IN CONDUIT BETWEEN INDOOR AND OUTDOOR UNITS.

J. EQUIPMENT, HVAC DUCTS, PIPING AND OTHER DEVICES AND MATERIALS INSTALLED OUTDOORS OR EXPOSED TO WEATHER SHALL BE WEATHER PROOF.

K. USE FLEXIBLE DUCTS ONLY FOR THE LAST 5 FEET MAXIMUM AT AIR OUTLETS. PER 2016 CMC-603.4.1 EXCEPT FOR RESIDENTIAL OCCUPANCIES DO NOT USE FLEXIBLE DUCTWORK IN LIEU OF ELBOWS OR FITTINGS.

L. PROVIDE MANUAL VOLUME DAMPERS AT EACH GRILLE, REGISTER, AND DIFFUSER, AND LOCATE EQUIDISTANCE BETWEEN BRANCH TAKEOFF AND AIR INLET/OUTLET. DO NOT USE VOLUME DAMPERS INTEGRAL WITH GRILLES, DIFFUSERS AND REGISTERS FOR AIR BALANCING.

M. INSTALL EQUIPMENT WITH SUFFICIENT ACCESS TO PANELS, ELECTRICAL CONNECTIONS, CONTROLS, FILTERS, MOTORS, ETC. COORDINATE ACCESS TO ALL DAMPERS, VALVES, AND OTHER SERVICEABLE EQUIPMENT. REVIEW CEILING HEIGHTS AND COORDINATE ACCESS PANEL LOCATIONS.

N. COORDINATE EQUIPMENT PLATFORMS, AND CUTTING AND PATCHING. OBTAIN WRITTEN PERMISSION FROM THE ARCHITECT PRIOR TO ANY STRUCTURAL MODIFICATIONS, CUTTING OR PATCHING WORK. KEEP SAW CUTTING TO A MINIMUM.

O. VERIFY DIFFUSERS, GRILLES, AND REGISTER MOUNTING FRAME TYPES WITH CONSTRUCTION TYPE AND CONFIGURATION.

P. PAINT FLAT BLACK ALL VISIBLE INTERIOR PORTIONS OF DUCTWORK.

Q. PROTECT AND ISOLATE DUCTS STORED ON CONSTRUCTION SITE FROM DUST CONTAMINATION.

R. COORDINATE LOCATION OF SENSORS AND THERMOSTATS WITH ARCHITECT. COMPLY WITH ADA REQUIREMENTS.

S. "DEMOLISH" OR "REMOVE" MEAN: REMOVE AND RETURN TO OWNER FOR ACCEPTANCE, AND DISPOSE OF ANY ITEMS NOT ACCEPTED BY THE OWNER.

T. COORDINATE WITH DIVISION 26 FOR LOCATION OF POWER AND LOCAL DISCONNECTS FOR MECHANICAL EQUIPMENT DEVICES. PROVIDE STARTERS FOR EQUIPMENT WITHOUT VFD'S, ECM MOTORS, OR EQUIPMENT WITHOUT INTEGRAL STARTERS.

U. MAINTAIN MINIMUM ELECTRICAL CODE AND UNIT MANUFACTURER'S CLEARANCES TO ADJACENT CONSTRUCTION OR EQUIPMENT, PER CEC OR THE FOLLOWING TABLE:

	0-150 VOLT	150-600
NO LIVE OR GROUNDED PARTS ON OPPOSITE SIDE	36 INCHES	36 INCHES
GROUNDED PARTS ON OPPOSITE SIDE	36 INCHES	42 INCHES
LIVE PARTS ON OPPOSITE SIDE	36 INCHES	48 INCHES

SHEET INDEX

M0.01.1 SYMBOLS LIST AND GENERAL NOTES - MECHANICAL
M0.02.1 SCHEDULES - MECHANICAL
M0.03.1 TITLE 24 - MECHANICAL
M0.04.1 TITLE 24 - MECHANICAL

M2.30A.1 1ST FLOOR OVERALL PLAN - MECHANICAL
M2.30B.1 2ND FLOOR OVERALL PLAN - MECHANICAL

M2.32.1 DEMO & NEW - 1ST FLOOR - EAST - CLASSROOM - PAINTING STUDIO - MECHANICAL
M2.33.1 DEMO & NEW - 1ST FLOOR - EAST - CLASSROOM - DRAWING STUDIO - MECHANICAL
M2.34.1 DEMO & NEW - 1ST FLOOR - EAST - BOOKSTORE - MECHANICAL
M2.35.1 DEMO & NEW - 1ST FLOOR - EAST - ASSESSMENT LAB - MECHANICAL
M2.37.1 DEMO & NEW - 2ND FLOOR - EAST - A&P LAB - MECHANICAL
M2.38.1 ATTIC FLOOR PLAN - EAST - MECHANICAL

M3.01.1 SECTIONS - MECHANICAL

M5.01.1 DETAILS - MECHANICAL
M5.02.1 DETAILS - MECHANICAL
M5.03.1 DETAILS - MECHANICAL

M6.01.1 CONTROLS - MECHANICAL

NOLL & TAM ARCHITECTS
729 Heinz Avenue
Berkeley, CA 94710
tel 510.542.2200
fax 510.542.2201

ARCHITECTS SEAL

APPROVALS
FILE NUMBER: 07-C1
DIVISION OF THE STATE ARCHITECT
APP# 01-117630
ACS________ FLS________ SSS________
Date:

PROJECT 2016-0538
CONTACT [illegible]
INTERFACE ENGINEERING
135 Main Street
Suite 400
San Francisco, CA 94105
TEL 415.489.7240
FAX 415.489.7289
www.interfaceengineering.com

PROJECT TITLE
CONTRA COSTA CCD
D-4002
DVC SAN RAMON CAMPUS EXPANSION
1690 Watermill Rd.
San Ramon, CA 94582

ISSUE TITLE
INCREMENT 1 - RENOVATION

ISSUE DATE 10/26/2020
NOLL & TAM JOB NUMBER 21630
REVISIONS
| DATE | DESCRIPTION

SHEET TITLE
SYMBOLS LIST AND GENERAL NOTES - MECHANICAL

SHEET NUMBER
M0.01.1

AIR HANDLING UNIT SCHEDULE

		BASIS OF DESIGN		SUPPLY FAN										CHILLED WATER COOLING COIL													HOT WATER HEATING COIL											PRE-FILTER				FINAL FILTER				ELECTRICAL								
				TOTAL CFM		TSP	ESP	FAN	# OF					TOTAL	SENS	#			WATER	EWT	LWT	EDB	EWB	LDB	LWB	FACE	APD	WPD	CHW MIN	MIN	#			WATER	EWT	LWT	EAT	LAT	FACE	APD	WPD	HW MIN	EFF	FACE	INITIAL	FINAL	EFF	FACE	INITIAL	FINAL						SMOKE	APPROX.	MAX	
TAG	AREA SERVED	MFR	MODEL	MAX.	MIN.	(IN H2O)	(IN H2O)	TYPE	FANS	BHP	MHP	FRPM	VFD (Y/N)	CAP (MBH)	CAP (MBH)	ROWS	FPI	FLOW (GPM)	(°F)	(°F)	(°F)	(°F)	(°F)	(°F)	VELOCITY (FPM)	(IN H2O)	(FT H2O)	BRANCH PIPE SIZE	CAP (MBH)	ROWS	FPI	FLOW (GPM)	(°F)	(°F)	(°F)	(°F)	VELOCITY (FPM)	(IN H2O)	(FT H2O)	BRANCH PIPE SIZE	MERV	VEL (FPM)	PD (IN H2O)	PD (IN H2O)	HEPA	VEL (FPM)	PD (IN H2O)	PD (IN H2O)	VOLTS	PH	FLA	MCA	MOCP	DETECT. (Y/N)	DIMS (LxWxH)	WT (LBS)	NOTES
AHU-7	ANATOMY & CADAVER LAB	GOVERNAIR	ATF-5K	3,825	1320	5.53	2.0	DIRECT DRIVE	1	5.9	7.5	2905	Y	238.7	225.7	6	8	36.6	43	56	99	69	53	51	416.09	0.4	5.68	2"	207	1	8	10.6	180	140	24	61	416.1	0.06	2.68	1.25"	8 (4")	450	0.35	1.0	13(12")	450	0.4	1.0	460	3	8.7	11	17.5	Y	210"x62"x50"	4000	1,2,3,4, 5,6,7,8

NOTES:
1 PROVIDE VARIABLE FREQUENCY DRIVES ON SUPPLY FAN.
2 AMBIENT OUTSIDE AIR TEMPERATURE FOR COOLING: 99°F.
3 AMBIENT OUTSIDE AIR TEMPERATURE FOR HEATING: 24°F.
4 SMOKE DETECTOR REQUIRED. SEE CONTROLS SPECIFICATIONS.
5 PROVIDE UNIT IN MODULES TO FIT THROUGH ROOF HATCH, ~10'X10'.
6 PROVIDE INTERNAL SPRING ISOLATION DAMPERS FOR FANS.
7 PROVIDE STEEL CURB FOR AHU.
8 REFER TO 1/M6.01.1 CONTROL DIAGRAM FOR FAN SHUTDOWN.

TERMINAL UNIT WITH HOT WATER HEAT SCHEDULE

		BASIS OF DESIGN		INLET	COOLING AIRFLOW		MIN. INLET		HOT WATER HEATING COIL										
SYMBOL	AREA SERVED	MFR	MODEL	SIZE (IN)	MAX CFM	MIN CFM	SP (IN H2O)	NC	MAX HTG CFM	MIN CAP (MBH)	# ROWS	WATER FLOW (GPM)	EWT (°F)	LWT (°F)	EAT (°F)	LAT (°F)	VALVE	VALVE SIZE	HW MIN BRANCH PIPE SIZE	CW MIN BRANCH PIPE SIZE	NOTES
VAV-1-20	ANATOMY LAB 229	TITUS	DESV	14	1280	350	1	20	640	34.7	2	1.2	180	121.6	55	90.6	2 WAY	1/2"	3/4"		
VAV-1-21	ANATOMY LAB 229	TITUS	DESV	14	1280	350	1	20	640	34.7	2	1.2	180	121.6	55	90.6	2 WAY	1/2"	3/4"		
VAV-1-22	CADAVER LAB 228C	TITUS	DESV	12	1265	250	1	20	630	24.8	2	0.9	180	124.5	55	90.5	2 WAY	1/2"	3/4"		
VAV-3-30	ASSESSMENT 148	TITUS	DESV	12	1400	280	1	22	700	27.1	2	1	180	125.1	55	90	2 WAY	1/2"	3/4"		
VAV 5-7	WORKROOM 182	TITUS	DESV	6	150	30	1	11	75	3.6	1	0.3	180	155.9	55	98.1	2 WAY	1/2"	3/4"		
VEV-1	CADAVER LAB 228C	TITUS	DECV	8	525	--															
VEV-2	CADAVER LAB 228C	TITUS	DECV	10	990	390															
VEV-3	CADAVER LAB 228C	TITUS	DECV	6	390	--															
VEV-4	CADAVER LAB 228C	TITUS	DECV	6	100	--															
VEV-5	ANATOMY LAB 229	TITUS	DECV	16	2640	700															
(E)VAV 1-3	CORRIDOR 231A	TITUS	DESV	12	950	190	1	20	475	18.4	1	2.4	180	164.1	55	90		1/2"			
(E)VAV 1-8	PAINTING STUDIO 166	TITUS	DESV	12	1800	360	1	25	900	34.9	1	1.4	180	129.4	55	90		1/2"			
(E)VAV 1-10	DRAWING STUDIO 168	TITUS	DESV	14	1960	390	1	21	980	38	1	1.3	180	122	55	90		1/2"			
(E)VAV 3-6	WAITING AREA 147	TITUS	DESV	8	425	85	1	18	213	8.1	1	0.8	180	158	55	90		1/2"			
(E)VAV 3-8	PART TIME FACULTY 152	TITUS	DESV	8	325	65	1	15	160	6.2	1	0.4	180	148.4	55	90		1/2"			
(E)VAV 5-4	BOOKSTORE 181	TITUS	DESV	14	1800	360	1	21	900	35	1	1.2	180	121.1	55	90.1		1/2"			

NOTES:

FAN SCHEDULE

		BASIS OF DESIGN				AIR FLOW CFM					ELECTRICAL						
SYMBOL	AREA SERVED	MFR	MODEL	TYPE	DRIVE	MAX.	MIN.	TSP (IN H2O)	MAX RPM	SOUND (dBA)	VOLTS	PH	MHP	VFD (Y/N)	APPROX. DIMS (LxWxH)	MAX WT (LBS)	NOTES
EF-AP1	CADAVER, ANATOMY AND PHYSIOLOGY LABS	GREENHECK	CSW-18-BI-21-10-I-50	CENTRIFUGAL	BELT	3,905	1,320	3.0	2099	80 INLET 82 OUTLET	460	3	5	Y	45x36x38	305	1, 2, 3, 4, 5

NOTES:
1 PREMIUM EFFICIENCY MOTOR (MIN. 89.5%)
2 SHAFT GROUNDING
3 DRIVES (1.5 SF) @ 1725 RPM
4 EPOXY POWDER
5 SPRING ISOLATORS

DIFFUSER, REGISTER AND GRILLE SCHEDULE

SYMBOL	TYPE	FACE	FRAME	DAMPER	FINISH	BASIS OF DESIGN	REMARKS
CD-1	CEILING DIFFUSER	PERFORATED	LAY-IN	NONE	WHITE	TITUS PCS	1,2
CRG-1	CEILING RETURN GRILLE	PERFORATED	LAY-IN	NONE	WHITE	TITUS PAR	1,2
CEG-1	CEILING EXHAUST GRILLE	PERFORATED	LAY-IN	NONE	WHITE	TITUS PAR	1,2
RG-1	SIDEWALL RETURN GRILLE	LOUVERED	SURFACE	NONE	WHITE	TITUS 350RL	1,3
SG-1	SIDEWALL SUPPLY GRILLE	LOUVERED	SURFACE	NONE	WHITE	TITUS 300RL	1,3
LS-1	FLOWBAR 8" INLET	2" SLOT WIDTH	TYPE 11	NONE	WHITE	TITUS FT-20	1,4
LE-1	FLOWBAR 12" INLET	2" SLOT WIDTH	TYP 11	NONE	WHITE	TITUS FT-20	1,4

NOTES:
1 COORDINATE EXACT LOCATION WITH LIGHTS, SPRINKLER HEADS, AND ARCH. RCP.
2 USE BORDER TYPE 2 FOR SURFACE MOUNT IN HARD CEILING.
3 COORDINATE WITH WALL ELEVATIONS.
4 INSULATED.

NOLL & TAM ARCHITECTS
729 Heinz Avenue
Berkeley, CA 94710
tel 510.542.2200
fax 510.542.2201

ARCHITECTS SEAL

APPROVALS
FILE NUMBER: 07-C1
DIVISION OF THE STATE ARCHITECT
APP# 01-117630
ACS_____FLS_____SSS_____
Date:

PROJECT 2016-0538
CONTACT Jhanik Bode Sharma
INTERFACE ENGINEERING
135 Main Street
Suite 400
San Francisco, CA 94105
TEL 415.489.7240
FAX 415.489.7289
www.interfaceengineering.com

PROJECT TITLE
CONTRA COSTA CCD
D-4002
DVC SAN RAMON CAMPUS EXPANSION

1690 Watermill Rd.
San Ramon, CA 94582

ISSUE TITLE
INCREMENT 1 - RENOVATION

ISSUE DATE 10/26/2020
NOLL & TAM JOB NUMBER 21630
REVISIONS
| DATE | DESCRIPTION

SHEET TITLE
SCHEDULES - MECHANICAL

SHEET NUMBER
M0.02.1

6/21/2018 11:19:21 AM C:\Users\beckie.demo\Documents\Revit locals\DVCSR Expansion_Central 2018_beckie.demo.rvt

STATE OF CALIFORNIA
ENVELOPE COMPONENT APPROACH
CEC-NRCC-ENV-01-E (Revised 01/16) CALIFORNIA ENERGY COMMISSION

CERTIFICATE OF COMPLIANCE	NRCC-ENV-01-E
Envelope Component Approach	Page of
Project Name: DVC San Ramon Campus Expansion	Date Prepared: 6/25/2018

A. GENERAL INFORMATION

01	Project Location:	1690 Watermill Rd.	06	Compliance Method:	☑ Component ☐ Unconditioned (file Affidavit)
02	CA City and Zip Code:	San Ramon, 94582	07	Building Front Orientation:	
03	Climate Zone:	12	08	Phase of Construction:	☐ New Construction ☐ Additions ☑ Alteration
04	Total Conditioned Floor Area:	4,820	09	Building Occupancy:	☑ Nonresidential ☐ High Rise Residential ☐ Hotel/Motel Guest Room
05	Building Type:	☐ Schools (Public Schools) ☐ Relocatable Public School Building ☑ Conditioned Spaces ☐ Unconditioned Spaces ☐ Skylight Area for Large Enclosed Space > 5000 ft² (If checked, include the NRCC-ENV-04-E with submittal)			

B. ENVELOPE DETAILS - FRAMED

01	02	03	04	05	06	07	08		09	10	11
Tag/ID	Assembly Type	Frame Material	Frame Depth	Frame Spacing	Cavity R-value	Continuous Insulation R-value	Appendix JA4 Reference Table	Cell	Proposed U-Factor	Required U-Factor from Tables 140.3-B, C, or D	Field Inspection Comments
1	Wall	Metal	6"	16"	19	0.0	4.3.3	A4	0.154	0.069	R-19 Wall Metal Stud
2	Wall	Metal	6"	16"	19	0.0	4.3.3	A23	0.154	0.069	R-19 Wall Metal Stud
3	Wall	Metal	6"	16"	19	0.0	4.3.3	A5	0.154	0.069	R-19 Wall Metal Stud
4	Wall	Metal	6"	16"	19	0.0	4.3.3	A4	0.154	0.069	R-19 Wall Metal Stud

Add Row Remove Last

C. ENVELOPE DETAILS - NON-FRAMED

01	02	03	04	05	06	07		08	09	10
Tag/ID	Assembly Type	Assembly Materials	Thickness (inches)	Interior or Core Insulation R-Value	Continuous Insulation R-Value	Appendix JA4 Reference Table	Cell	Proposed U-Factor	Required U-Factor from Tables 140.3-B, C, or D	Field Inspection Comments

STATE OF CALIFORNIA
ENVELOPE COMPONENT APPROACH
CEC-NRCC-ENV-01-E (Revised 01/16) CALIFORNIA ENERGY COMMISSION

CERTIFICATE OF COMPLIANCE	NRCC-ENV-01-E
Envelope Component Approach	Page of
Project Name: DVC San Ramon Campus Expansion	Date Prepared: 6/25/2018

Add Row Remove Last

D. ENVELOPE DETAILS - MASS

01	02	03	04	05	06	07	08		09	10	11
Tag/ID	Mass Type	Density (lb/ft³)	Mass Thickness (inches)	Furring Strip Thickness (inches)	Interior Insulation R-Value	Exterior Insulation R-Value	Appendix JA4 Reference Table	Cell	Proposed U-Factor	Required U-Factor from Tables 140.3-B, C, or D	Field Inspection Comments

Add Row Remove Last

E. ROOFING PRODUCTS (COOL ROOF)

01	02	03	04	05	06	07	08	09	10	11
				Proposed			Minimum Required			
Mass Roof 25 lb/ft² or Greater	Roof Pitch	CRRC Product ID Number	Product Type	Aged Solar Reflectance¹	Thermal Emittance	SRI² (Optional)	Aged Solar Reflectance	Thermal Emittance	SRI (Optional)	Comments
☐				☐						

Add Row Remove Last

- An aged solar reflectance less than 0.63 is allowed provided the maximum roof/ceiling U-factor in TABLE 140.3 is not exceeded	
- High-rise residential buildings and Hotels and Motels with low-sloped roofs in Climate Zones 1 through 8, 12, and 16 are exempted from aged Solar Reflectance and thermal emittance requirements	
- High-rise residential and Hotels/Motels with steep-sloped roofs in Climate Zones 1 and 16 are exempt from aged Solar Reflectance and thermal emittance requirements	
- The roof area covered by building integrated photovoltaic panels and building integrated solar thermal panels are exempt from aged Solar Reflectance and thermal emittance requirements	
- To apply Liquid Field Applied Coatings, the coating must be applied across the entire roof surface and meet the dry mil thickness or coverage recommended by the coatings manufacturer and meet minimum performance requirements listed in §110.8(i)4. Select the applicable coating:	

STATE OF CALIFORNIA
ENVELOPE COMPONENT APPROACH
CEC-NRCC-ENV-01-E (Revised 01/16) CALIFORNIA ENERGY COMMISSION

CERTIFICATE OF COMPLIANCE	NRCC-ENV-01-E
Envelope Component Approach	Page of
Project Name: DVC San Ramon Campus Expansion	Date Prepared: 6/25/2018

☐ Aluminum-Pigmented Asphalt Roof Coating ☐ Cement-Based Roof Coating ☐ Other

NOTES:
1. Check the box if the aged Solar Reflectance was not available in the Cool Roof Council's Rated Product Directory, then use the equation in Section 110.8(i)2: $\rho_{aged} = 0.2 + \beta(\rho_{initial} - 0.2)$ to obtain a calculated aged solar reflectance value. Where $\rho_{initial}$ is the Initial Solar Reflectance found in the directory and β is either 0.65 for Field applied coatings or 0.70 for all other roofing products other than Field-Applied Coating.
2. Calculate the SRI Value by using the SRI-Worksheet and enter the resulting value in the SRI column above and attach a copy of the SRI-Worksheet (NRCC-ENV-03-E) to this compliance document.

F. AIR BARRIER

01	02	03	04	05
Name	Air Barrier Material Type	Air Barrier Assembly Type	Whole Building Air Leakage Testing	Comments

Add Row Remove Last

G. FENESTRATION PROPOSED AREAS AND EFFICIENCIES

01	02	03	04	05	06	07	08	09	10	11	12
					Proposed						
Tag/ID	Fenestration Type	Surface Area	Orientation	# of Panes	Max U-Factor	Max (R)SHGC	Min VT	Label	Overhang	Condition Status	Comments
1	Non Residential prescriptive	106	East	2	0.36	0.25	0.42	NFRC	No	New	(CEC 141.0(b)2Aii Exception 2 for SHGC and VT applies

Add Row Remove Last

H. ENVELOPE MANDATORY MEASURES

Indicate location on building plans of Mandatory Envelope Measures Note Block: ______________________

INSTRUCTIONS TO APPLICANT ENVELOPE COMPLIANCE & WORKSHEETS (check box if worksheet are included)

For detailed instructions on the use of this and all Energy Efficiency Standards compliance documents, please refer to the Energy Commission website.

☑ NRCC-ENV-01-E Certificate of Compliance. Required on plans for all submittals.
☐ NRCC-ENV-04-E Use when minimum skylight requirements for large enclosed spaces are required in climate zones 2 through 15. Optional on plans.

STATE OF CALIFORNIA
ENVELOPE COMPONENT APPROACH
CEC-NRCC-ENV-01-E (Revised MM/YY) CALIFORNIA ENERGY COMMISSION

CERTIFICATE OF COMPLIANCE	NRCC-ENV-01-E
Envelope Component Approach	(Page 4 of 4)
Project Name: DVC San Ramon Campus Expansion	Date Prepared: 6/25/2018

DOCUMENTATION AUTHOR'S DECLARATION STATEMENT

1. I certify that this Certificate of Compliance documentation is accurate and complete.

Documentation Author Name: Eileen Welch	Documentation Author Signature:
Company: IEI	Signature Date: 6/25/2018
Address: 135 Main ST	CEA/ HERS Certification Identification (if applicable):
City/State/Zip: ,	Phone:

RESPONSIBLE PERSON'S DECLARATION STATEMENT

I certify the following under penalty of perjury, under the laws of the State of California:
1. The information provided on this Certificate of Compliance is true and correct.
2. I am eligible under Division 3 of the Business and Professions Code to accept responsibility for the building design or system design identified on this Certificate of Compliance (responsible designer).
3. The energy features and performance specifications, materials, components, and manufactured devices for the building design or system design identified on this Certificate of Compliance conform to the requirements of Title 24, Part 1 and Part 6 of the California Code of Regulations.
4. The building design features or system design features identified on this Certificate of Compliance are consistent with the information provided on other applicable compliance documents, worksheets, calculations, plans and specifications submitted to the enforcement agency for approval with this building permit application.
5. I will ensure that a completed signed copy of this Certificate of Compliance shall be made available with the building permit(s) issued for the building, and made available to the enforcement agency for all applicable inspections. I understand that a completed signed copy of this Certificate of Compliance is required to be included with the documentation the builder provides to the building owner at occupancy.

Responsible Designer Name: Jesse Agosta	Responsible Designer Signature:
Company: IEI	Date Signed: 6/25/2018
Address: 135 Main ST	License: M736795
City/State/Zip: ,	Phone:

STATE OF CALIFORNIA
FENESTRATION WORKSHEET
CEC-NRCC-ENV-02-E (Revised 09/16) CALIFORNIA ENERGY COMMISSION

CERTIFICATE OF COMPLIANCE	NRCC-ENV-02-E
Fenestration Worksheet	(Page 2 of 3)
Project Name: DVC San Ramon Campus Expansion	Date Prepared: 6/25/2018

D. SKYLIGHT AREA CALCULATION - See §143(a)6A

	ACTUAL GROSS ROOF AREA		STANDARD ALLOWED SKYLIGHT AREA
01. IF Atrium/Skylight Height is ≤ 55 ft; **or**	0	ft² × 0.05 =	0 ft²
2. IF Atrium/Skylight Height is > 55 ft		ft² × 0.10 =	ft²
03. Proposed Skylight Area (from plans)		0 ft²	
04. Skylight SSR %[1, 2] = Proposed Skylight Area Divided by Actual Gross Roof Area =		0.0 %	
05. Haze material value greater than 90% according to ASTM D1003, or other approved method by the Energy Commission			Yes / No ☐ ☐

1. If the SKYLIGHT SSR % is less than or equal to 5% then choose the appropriate column in Table 140.3-B and C and row in Table 140.3-D.
2. If the SKYLIGHT SSR % is greater than 5% then the Envelope Component Approach may not be used.

E. RELOCATABLE PUBLIC SCHOOL BUILDINGS - See Section140.3(a)8

Option 1	
☐ For Specific Climate Zone, use Table 140.3-B - Prescriptive Envelope Criteria.	☐ Specific Climate Zone Metal Identification Label – Place two labels on each relocatable school building and indicate on the building plans. **Indicate location from the building plans:**
Option 2	
☐ For Any (All) Climate Zone, use Table 140.3-D - Prescriptive Envelope Criteria.	☐ Any (All) Climate Zone Metal Identification Label - Place two labels on each relocatable school building and indicate on the building plans. **Indicate location from the building plans:**

STATE OF CALIFORNIA
FENESTRATION WORKSHEET
CEC-NRCC-ENV-02-E (Revised 09/16) CALIFORNIA ENERGY COMMISSION

CERTIFICATE OF COMPLIANCE	NRCC-ENV-02-E
Fenestration Worksheet	(Page 3 of 3)
Project Name: DVC San Ramon Campus Expansion	Date Prepared: 6/25/2018

DOCUMENTATION AUTHOR'S DECLARATION STATEMENT

1. I certify that this Certificate of Compliance documentation is accurate and complete.

Documentation Author Name: Eileen Welch	Documentation Author Signature:
Company: IEI	Signature Date: 6/25/2018
Address: 135 Main ST	CEA/ HERS Certification Identification (if applicable):
City/State/Zip: ,	Phone:

RESPONSIBLE PERSON'S DECLARATION STATEMENT

I certify the following under penalty of perjury, under the laws of the State of California:
1. The information provided on this Certificate of Compliance is true and correct.
2. I am eligible under Division 3 of the Business and Professions Code to accept responsibility for the building design or system design identified on this Certificate of Compliance (responsible designer).
3. The energy features and performance specifications, materials, components, and manufactured devices for the building design or system design identified on this Certificate of Compliance conform to the requirements of Title 24, Part 1 and Part 6 of the California Code of Regulations.
4. The building design features or system design features identified on this Certificate of Compliance are consistent with the information provided on other applicable compliance documents, worksheets, calculations, plans and specifications submitted to the enforcement agency for approval with this building permit application.
5. I will ensure that a completed signed copy of this Certificate of Compliance shall be made available with the building permit(s) issued for the building, and made available to the enforcement agency for all applicable inspections. I understand that a completed signed copy of this Certificate of Compliance is required to be included with the documentation the builder provides to the building owner at occupancy.

Responsible Designer Name: Jesse Agosta	Responsible Designer Signature:
Company: IEI	Date Signed: 6/25/2018
Address: 135 Main ST	License: M736795
City/State/Zip: ,	Phone:

NOLL & TAM ARCHITECTS
729 Heinz Avenue
Berkeley, CA 94710
tel 510.542.2200
fax 510.542.2201

ARCHITECTS SEAL

APPROVALS
FILE NUMBER: 07-C1
DIVISION OF THE STATE ARCHITECT
APP# 01-117630
ACS_______ FLS_______ SSS_______
Date:

PROJECT 2016-0538
CONTACT [illegible]
INTERFACE ENGINEERING
135 Main Street
Suite 400
San Francisco, CA 94105
TEL 415.489.7240
FAX 415.489.7289
www.interfaceengineering.com

PROJECT TITLE
CONTRA COSTA CCD
D-4002
DVC SAN RAMON CAMPUS EXPANSION

1690 Watermill Rd.
San Ramon, CA 94582

ISSUE TITLE
INCREMENT 1 - RENOVATION

ISSUE DATE	10/26/2020
NOLL & TAM JOB NUMBER	21630

REVISIONS
| DATE | DESCRIPTION

SHEET TITLE
TITLE 24 - MECHANICAL

SHEET NUMBER
M0.03.1

6/21/2018 11:19:21 AM C:\Users\beckie.denio\Documents\Revit locals\DVCSR Expansion_Central 2018_beckie.denio.rvt

FILE: 0538-M0.03-M0.04.DWG - M0.03 | EDIT: 10/19/2018 2:52 PM BY PRIYANKV | PLOT: 9/29/2021 8:15 PM BY VICTOR VALENCIA

STATE OF CALIFORNIA
MECHANICAL SYSTEMS
CEC-NRCC-MCH-01-E (Revised 01/16) CALIFORNIA ENERGY COMMISSION

CERTIFICATE OF COMPLIANCE	NRCC-MCH-01-E
Mechanical Systems	Page of
Project Name: DVC San Ramon Campus Expansion	Date Prepared: 06/25/2018

A. MECHANICAL COMPLIANCE DOCUMENTS & WORKSHEETS (check box if worksheet is included)

For detailed instructions on the use of this and all Energy Efficiency Standards compliance forms, refer to the 2016 Nonresidential Manual
Note: The Enforcement Agency may require all forms to be incorporated onto the building plans.

YES	NO	Comp. Doc./Worksheet #	Title
◉	○	NRCC-MCH-01-E (Part 1 of 3)	Certificate of Compliance, Declaration. Required on plans for all submittals.
◉	○	NRCC-MCH-01-E (Part 2 of 3)	Certificate of Compliance, Required Acceptance Tests (MCH-02-A to 11-A). Required on plans for all submittals.
◉	○	NRCC-MCH-01-E (Part 3 of 3)	Certificate of Compliance, Required Acceptance Tests (MCH-12-A to 18-A). Required on plans where applicable.
◉	○	NRCC-MCH-02-E (Part 1 of 2)	Mechanical Dry Equipment Summary is required for all submittals with Central Air Systems. It is optional on plans.
◉	○	NRCC-MCH-02-E (Part 2 of 2)	Mechanical Wet Equipment Summary is required for all submittals with chilled water, hot water or condenser water systems. It is optional on plans.
◉	○	NRCC-MCH-03-E	Mechanical Ventilation and Reheat is required for all submittals with multiple zone heating and cooling systems. It is optional on plans.
○	◉	NRCC-MCH-07-E (Part 1 of 2)	Power Consumption of Fans. Required on plans where applicable
○	◉	NRCC-MCH-07-E (Part 2 of 2)	Power Consumption of Fans, Declaration. Required on plans where applicable

B. MECHANICAL HVAC ACCEPTANCE FORMS (check box for required compliance documents)

Test Performed By:

Designer:
This compliance document is to be used by the designer and attached to the plans. Listed below are all the acceptance tests for HVAC systems. The designer is required to check the applicable boxes for all acceptance tests that apply and list all equipment that requires an acceptance test. All equipment of the same type that requires a test, list the equipment description and the number of systems.

Installing Contractor:
The contractor who installed the equipment is responsible to either conduct the acceptance test themselves or have a qualified entity run the test for them. If more than one person has responsibility for the acceptance testing, each person shall sign and submit the Certificate of Acceptance applicable to the portion of the construction or installation for which they are responsible.

Enforcement Agency:
Plancheck - The NRCC-MCH-01-E compliance document is not considered a completed document and is not to be accepted by the building department unless the correct boxes are checked.

Test Description		MCH-02-A	MCH-03-A	MCH-04-A	MCH-05-A	MCH-06-A	MCH-07-A	MCH-08-A	MCH-09-A	MCH-10-A	MCH-11-A
Equipment Requiring Testing or Verification	# of Units	Outdoor Air	Single Zone Unitary	Air Distribution Ducts	Economizer Controls	Demand Controlled Ventilation (DCV)	Supply Fan VAV	Valve Leakage Test	Supply Water Temp. Reset	Hydronic System Variable Flow Control	Automatic Demand Shed Control
AHU-7	1	☑	☑	☐	☐	☑	☐	☐	☐	☐	☐

Add Row | Remove Last

STATE OF CALIFORNIA
MECHANICAL SYSTEMS
CEC-NRCC-MCH-01-E (Revised 01/16) CALIFORNIA ENERGY COMMISSION

CERTIFICATE OF COMPLIANCE	NRCC-MCH-01-E
Mechanical Systems	Page of
Project Name: DVC San Ramon Campus Expansion	Date Prepared: 06/25/2018

C. MECHANICAL HVAC ACCEPTANCE FORMS (check box for required compliance documents)

Test Performed By:

Designer:
This compliance document is to be used by the designer and attached to the plans. Listed below are all the acceptance tests for HVAC systems. The designer is required to check the applicable boxes for all acceptance tests that apply and list all equipment that requires an acceptance test. All equipment of the same type that requires a test, list the equipment description and the number of systems.

Installing Contractor:
The contractor who installed the equipment is responsible to either conduct the acceptance test themselves or have a qualified entity run the test for them. If more than one person has responsibility for the acceptance testing, each person shall sign and submit the Certificate of Acceptance applicable to the portion of the construction or installation for which they are responsible.

Enforcement Agency:
Plancheck - The NRCC-MCH-01-E compliance document is not considered a completed document and is not to be accepted by the building department unless the correct boxes are checked.
Inspector - Before occupancy permit is granted all newly installed process systems must be tested to ensure proper operations.

Test Description		MCH-12-A	MCH-13-A	MCH-14-A	MCH-15-A	MCH-16-A	MCH-17-A	MCH-18-A
Equipment Requiring Testing or Verification	# of Units	Fault Detection & Diagnostics for DX Units	Automatic Fault Detection & Diagnostics for Air & Zone	Distributed Energy Storage DX AC Systems	Thermal Energy Storage (TES) Systems	Supply Air Temperature Reset Controls	Condenser Water Reset Controls	ECMS
AHU-7	1	☐	☐	☐	☐	☐	☐	☐

Add Row | Remove Last

STATE OF CALIFORNIA
MECHANICAL SYSTEMS
CEC-NRCC-MCH-01-E (Revised 01/16) CALIFORNIA ENERGY COMMISSION

CERTIFICATE OF COMPLIANCE	NRCC-MCH-01-E
Mechanical Systems	(Page 4 of 4)
Project Name: DVC San Ramon Campus Expansion	Date Prepared: 6/25/2018

DOCUMENTATION AUTHOR'S DECLARATION STATEMENT

1. I certify that this Certificate of Compliance documentation is accurate and complete.

Documentation Author Name: Eileen Welch	Documentation Author Signature: Eileen Welch
Company: IEI	Signature Date: 6/25/2018
Address: 135 Main ST	CEA/ HERS Certification Identification (if applicable):
City/State/Zip: ,	Phone:

RESPONSIBLE PERSON'S DECLARATION STATEMENT

I certify the following under penalty of perjury, under the laws of the State of California:
1. The information provided on this Certificate of Compliance is true and correct.
2. I am eligible under Division 3 of the Business and Professions Code to accept responsibility for the building design or system design identified on this Certificate of Compliance (responsible designer).
3. The energy features and performance specifications, materials, components, and manufactured devices for the building design or system design identified on this Certificate of Compliance conform to the requirements of Title 24, Part 1 and Part 6 of the California Code of Regulations.
4. The building design features or system design features identified on this Certificate of Compliance are consistent with the information provided on other applicable compliance documents, worksheets, calculations, plans and specifications submitted to the enforcement agency for approval with this building permit application.
5. I will ensure that a completed signed copy of this Certificate of Compliance shall be made available with the building permit(s) issued for the building, and made available to the enforcement agency for all applicable inspections. I understand that a completed signed copy of this Certificate of Compliance is required to be included with the documentation the builder provides to the building owner at occupancy.

Responsible Designer Name: Jesse Agosta	Responsible Designer Signature: [signature]
Company :	Date Signed: 6/25/2018
Address: 135 Main Street	License: M736795
City/State/Zip: San Francisco, CA 94105	Phone: 4154897255

STATE OF CALIFORNIA
HVAC DRY & WET SYSTEM REQUIREMENTS
CEC-NRCC-MCH-02-E (Revised 01/16) CALIFORNIA ENERGY COMMISSION

CERTIFICATE OF COMPLIANCE	NRCC-MCH-02-E
HVAC Dry & Wet System Requirements	(Page 1 of 3)
Project Name: DVC San Ramon Campus Expansion	Date Prepared: 6/25/2018

A. Equipment Tags and System Description[1] – Dry Systems		AHU-7	Undefined Systen	AHU-5(E)
MANDATORY MEASURES	***T-24 Sections***	***Reference to the Requirements in the Contract Documents[2]***		
Heating Equipment Efficiency[3]	110.1 or 110.2(a)	SEE M0.02.1		
Cooling Equipment Efficiency[3]	110.1 or 110.2(a)	↓		
HVAC or Heat Pump Thermostats	110.2(b), 110.2(c)	↓		
Furnace Standby Loss Control	110.2(d)	↓		
Low Leakage AHUs	110.2(f)	↓		
Ventilation[4]	120.1(b)	↓		
Demand Control Ventilation[5]	120.1(c)4	↓		
Occupant Sensor Ventilation Control[6]	120.1(c)5, 120.2(e)3	↓		
Shutoff and Reset Controls[7]	120.2(e)	↓		
Outdoor Air and Exhaust Damper Control	120.2(f)	↓		
Isolation Zones	120.2(g)	↓		
Automatic Demand Shed Controls	120.2(h)	↓		
Economizer FDD	120.2(i)	↓		
Duct Insulation	120.4	▼		
PRESCRIPTIVE MEASURES				
Equipment is sized in conformance with 140.4(a & b)	140.4(a & b)	Y Y/N	Y Y/N	Y Y/N
Supply Fan Pressure Control	140.4(c)	SEE M0.02.1		
Simultaneous Heat/Cool[8]	140.4(d)	↓		
Economizer	140.4(e)	↓		
Heat and Cool Air Supply Reset	140.4(f)	↓		
Electric Resistance Heating[9]	140.4(g)	↓		
Duct Leakage Sealing and Testing[10]	140.4(l)	▼		

Notes:
1. Provide equipment tags (e.g. AHU 1 to 10) and system description (e.g. Single Duct VAV reheat) as appropriate. Multiple units with common requirements can be grouped together.
2. Provide references to plans (i.e. Drawing Sheet Numbers) and/or specifications (including Section name/number and relevant paragraphs) where each requirement is specified. Enter "N/A" if the requirement is not applicable to this system.
3. The referenced plans and specifications must include all of the following information: equipment tag, equipment nominal capacity, Title 24 minimum efficiency requirements, and actual rated equipment efficiencies. Where multiple efficiency requirements are applicable (e.g. full- and part-load) include all. Where appliance standards apply (110.1), identify where equipment is required to be listed per Title 20 1601 et seq.
4. Identify where the ventilation requirements are documented for each central HVAC system. Include references to both central unit schedules and sequences of operation. If one or more spaces is naturally ventilated identify where this is documented in the plans and specifications. Multiple zone central air systems must also provide a MCH-03-E compliance document.
5. If one or more spaces has demand controlled ventilation identify where it is specified including the sensor specifications and the sequence of operation.
6. If one or more space has occupant sensor ventilation control identify where it is specified including the sensor specifications and the sequence of operation
7. If the system is DDC identify the sequences for the system start/stop, optimal start, setback (if required) and setup (if required). For all systems identify the specification for the thermostats and time clocks (if applicable).
8. Identify where the heating, cooling and deadband airflows are scheduled for this system. Include a reference to the specification of the zone controls. Provide a MCH-03-E compliance document.
9. Enter N/A if there is no electric heating. If the system has electric heating indicate which exception to 140.4(g) applies.
10. If duct leakage sealing and testing is required, a MCH-04-A compliance document must be submitted.

STATE OF CALIFORNIA
HVAC DRY & WET SYSTEM REQUIREMENTS
CEC-NRCC-MCH-02-E (Revised 01/16) CALIFORNIA ENERGY COMMISSION

CERTIFICATE OF COMPLIANCE	NRCC-MCH-02-E
HVAC Dry & Wet System Requirements	(Page 2 of 3)
Project Name: DVC San Ramon Campus Expansion	Date Prepared: 6/25/2018

B. Equipment Tags and System Description[1] – Wet Systems				
MANDATORY MEASURES	***T-24 Sections***	***Reference to the Requirements in the Contract Documents[2]***		
Heating Hot Water Equipment Efficiency[3]	110.1	N/A		
Cooling Chilled and Condenser Water Equipment Efficiency[3]	110.1, 140.4(i)	↓		
Open and Closed Circuit Cooling Towers conductivity or flow-based controls	110.2(e) 1	↓		
Open and Closed Circuit Cooling Towers Maximum Achievable Cycles of Concentration (LSI)[6]	110.2(e) 2	↓		
Open and Closed Circuit Cooling Towers Flow Meter with analog output	110.2(e) 3	↓		
Open and Closed Circuit Cooling Towers Overflow Alarm	110.2(e) 4	↓		
Open and Closed Circuit Cooling Towers Efficient Drift Eliminators	110.2(e) 5	↓		
Pipe Insulation	120.3	▼		
PRESCRIPTIVE MEASURES				
Cooling Tower Fan Controls	140.4(h)2, 140.4(h)5	Y/N	Y/N	Y/N
Cooling Tower Flow Controls	140.4(h)3	N/A		
Centrifugal Fan Cooling Towers[4]	140.4(h)4	↓		
Air-Cooled Chiller Limitation[5]	140.4(j)	↓		
Variable Flow System Design	140.4(k)	↓		
Chiller and Boiler Isolation	140.4(k)	↓		
CHW and HHW Reset Controls	140.4(k)	↓		
WLHP Isolation Valves	140.4(k)	↓		
VSD on CHW, CW & WLHP Pumps >5HP	140.4(k)	↓		
DP Sensor Location	140.4(k)	▼		

Notes:
1. Provide equipment tags (e.g. CH 1 to 3) or system description (e.g. CHW loop) as appropriate. Multiple units with common requirements can be grouped together.
2. Provide references to plans (i.e. Drawing Sheet Numbers) and/or specifications (including Section name/number and relevant paragraphs) where each requirement is specified. Enter "N/A" if the requirement is not applicable to this system.
3. The referenced plans and specifications must include all of the following information: equipment tag, equipment nominal capacity, Title 24 minimum efficiency requirements, and actual rated equipment efficiencies. Where multiple efficiency requirements are applicable (e.g. full- and part-load) include all. For chillers operating at non-standard efficiencies provide the Kadj values. For chillers also note whether the efficiencies are Path A or Path B.
4. Identify if cooling towers have propeller fans. If towers use centrifugal fans document which exception is used.
5. If air-cooled chillers are used, document which exceptions have been used to comply with 140.4(j) and the total installed design capacity of the air-cooled chillers in the chilled water plant.
6. Identify the existence of a completed MCH-06-E when open or closed circuit cooling towers are specified to be installed, otherwise enter "N/A".

STATE OF CALIFORNIA
MECHANICAL VENTILATION AND REHEAT
CEC-NRCC-MCH-03-E (Revised 05/16) CALIFORNIA ENERGY COMMISSION

CERTIFICATE OF COMPLIANCE	NRCC-MCH-03-E
Mechanical Ventilation & Reheat	Page of
Project Name: DVC San Ramon Campus Expansion	Date Prepared: 06/25/2018

A. Mechanical Ventilation and Reheat

In lieu of this compliance document, the required outdoor ventilation rates and airflows may be shown on the plans or the calculations can be presented in a spreadsheet. Mechanical Ventilation and Reheat worksheet available on the Energy Commission's website at: http://www.energy.ca.gov/title24/2016standards/.
Note: In all of the calculations that compare a supply quantity to the REQ'D V.A. quantity, the actual percentage of outdoor air in the supply is ignored.
Areas in buildings for which natural ventilation is used should be clearly designated. Specifications must require that building operating instructions include explanations of the natural ventilation system.

ACTUAL DESIGN (FROM EQUIPMENT SCHEDULES, ETC)						AREA BASIS			OCCUPANCY BASIS			ROOM BASIS	MINIMUM		VAV REHEATED PRIMARY AIR CFM			VAV DEADBAND PRIMARY AIR CFM		
01	02	03	04	05	06	07	08	09	10	11	12	13	14	15	16	17	18	19	20	21
ZONE/SYSTEM/VAV BOX TAG	DESIGN PRIMARY COOLING AIRFLOW (CFM)	DESIGN PRIMARY DEADBAND AIRFLOW (CFM)	DESIGN PRIMARY HEATING AIRFLOW (CFM)	CONTROL TYPE DDC (Y/N)	TRANSFER AIRFLOW (CFM)	CONDITIONED AREA (ft²)	MIN CFM PER AREA	MIN CFM BY AREA	NUMBER OF PEOPLE	CFM PER PERSON	MIN CFM BY OCCUPANT	MIN CFM BY ROOM	REQ'D VENT AIRFLOW (CFM)	COMPLIES?	BASED DESIGN PRIMARY COOLING AIR	MAXIMUM REHEAT (CFM)	COMPLIES?	PRIMARY COOLING AIR	AIRFLOW	COMPLIES?
VAV 1-20	1760	352	880	Yes		708	0.15	107	15	15	225		225	PAS	880	880	PAS	352	352	PAS
VAV 1-21	1760	352	880	Yes		695	0.15	105	15	15	225		225	PAS	880	880	PAS	352	352	PAS
VAV 1-22	1265	253	633	Yes		393	0.15	59	6	15	90		90	PAS	633	633	PAS	253	253	PAS
VAV 3-30	1400	280	700	Yes		935	0.15	140	15	15	225		225	PAS	700	700	PAS	280	280	PAS
VAV 5-7	150	30	75	Yes		95	0.15	15	2	15	30		30	PAS			N/A			N/A
(E)VAV 1-3	950	190	475	Yes		520	0.50	260	20	15	300		300	PAS	475	475	PAS	190	300	PAS
(E)VAV 1-8	1800	360	900	Yes		1050	0.38	399	50	15	750		750	PAS	900	900	PAS	360	750	PAS
(E)VAV 1-1[illegible]	1960	392	980	Yes		1229	0.38	468	60	15	900		90000	PAS	980	980	PAS	392	900	PAS
(E)VAV 3-6	425	85	213	Yes		600	0.50	300	15	15	225		300	PAS	213	300	PAS	85	300	PAS
(E)VAV 3-8	325	65	163	Yes		302	0.15	31	3	15	45		45	PAS	163	163	PAS	65	65	PAS
(E)VAV 5-4	1800	360	900	Yes		1584	0.25	396	18	15	270		396	PAS	900	900	PAS	360	396	PAS

Add Row | Remove Last

STATE OF CALIFORNIA
MECHANICAL VENTILATION AND REHEAT
CEC-NRCC-MCH-03-E (Revised 05/16) CALIFORNIA ENERGY COMMISSION

CERTIFICATE OF COMPLIANCE	NRCC-MCH-03-E
Mechanical Ventilation & Reheat	(Page 2 of 2)
Project Name: DVC San Ramon Campus Expansion	Date Prepared: 6/25/2018

DOCUMENTATION AUTHOR'S DECLARATION STATEMENT

1. I certify that this Certificate of Compliance documentation is accurate and complete.

Documentation Author Name: Eileen Welch	Documentation Author Signature: Eileen Welch
Company: IEI	Signature Date: 6/25/2018
Address: 135 Main ST	CEA/ HERS Certification Identification (if applicable):
City/State/Zip: ,	Phone:

RESPONSIBLE PERSON'S DECLARATION STATEMENT

I certify the following under penalty of perjury, under the laws of the State of California:
1. The information provided on this Certificate of Compliance is true and correct.
2. I am eligible under Division 3 of the Business and Professions Code to accept responsibility for the building design or system design identified on this Certificate of Compliance (responsible designer).
3. The energy features and performance specifications, materials, components, and manufactured devices for the building design or system design identified on this Certificate of Compliance conform to the requirements of Title 24, Part 1 and Part 6 of the California Code of Regulations.
4. The building design features or system design features identified on this Certificate of Compliance are consistent with the information provided on other applicable compliance documents, worksheets, calculations, plans and specifications submitted to the enforcement agency for approval with this building permit application.
5. I will ensure that a completed signed copy of this Certificate of Compliance shall be made available with the building permit(s) issued for the building, and made available to the enforcement agency for all applicable inspections. I understand that a completed signed copy of this Certificate of Compliance is required to be included with the documentation the builder provides to the building owner at occupancy.

Responsible Designer Name: Jesse Agosta	Responsible Designer Signature: [signature]
Company :	Date Signed: 6/25/2018
Address: 135 Main Street	License: M736795
City/State/Zip: San Francisco, CA 94105	Phone: 4154897255

NOLL & TAM ARCHITECTS
729 Heinz Avenue
Berkeley, CA 94710
tel 510.542.2200
fax 510.542.2201

ARCHITECTS SEAL

APPROVALS
FILE NUMBER: 07-C1
DIVISION OF THE STATE ARCHITECT
APP# 01-117630
ACS________FLS________SSS________
Date:

PROJECT 2016-0538
CONTACT [illegible]
INTERFACE ENGINEERING
135 Main Street
Suite 400
San Francisco, CA 94105
TEL 415.489.7240
FAX 415.489.7289
www.interfaceengineering.com

PROJECT TITLE
CONTRA COSTA CCD
D-4002
DVC SAN RAMON CAMPUS EXPANSION
1690 Watermill Rd.
San Ramon, CA 94582

ISSUE TITLE
INCREMENT 1 - RENOVATION

ISSUE DATE 10/26/2020
NOLL & TAM JOB NUMBER 21630
REVISIONS
| DATE | DESCRIPTION

SHEET TITLE
TITLE 24 - MECHANICAL

SHEET NUMBER
M0.04.1

6/21/2018 11:19:21 AM C:\Users\beckie.denio\Documents\Revit locals\DVCSR Expansion_Central 2018_beckie.denio.rvt

FILE: 0538–M0.03–M0.04.DWG – M0.04 | EDIT: 10/19/2018 2:52 PM BY PRIYANKV | PLOT: 9/29/2021 8:15 PM BY VICTOR VALENCIA

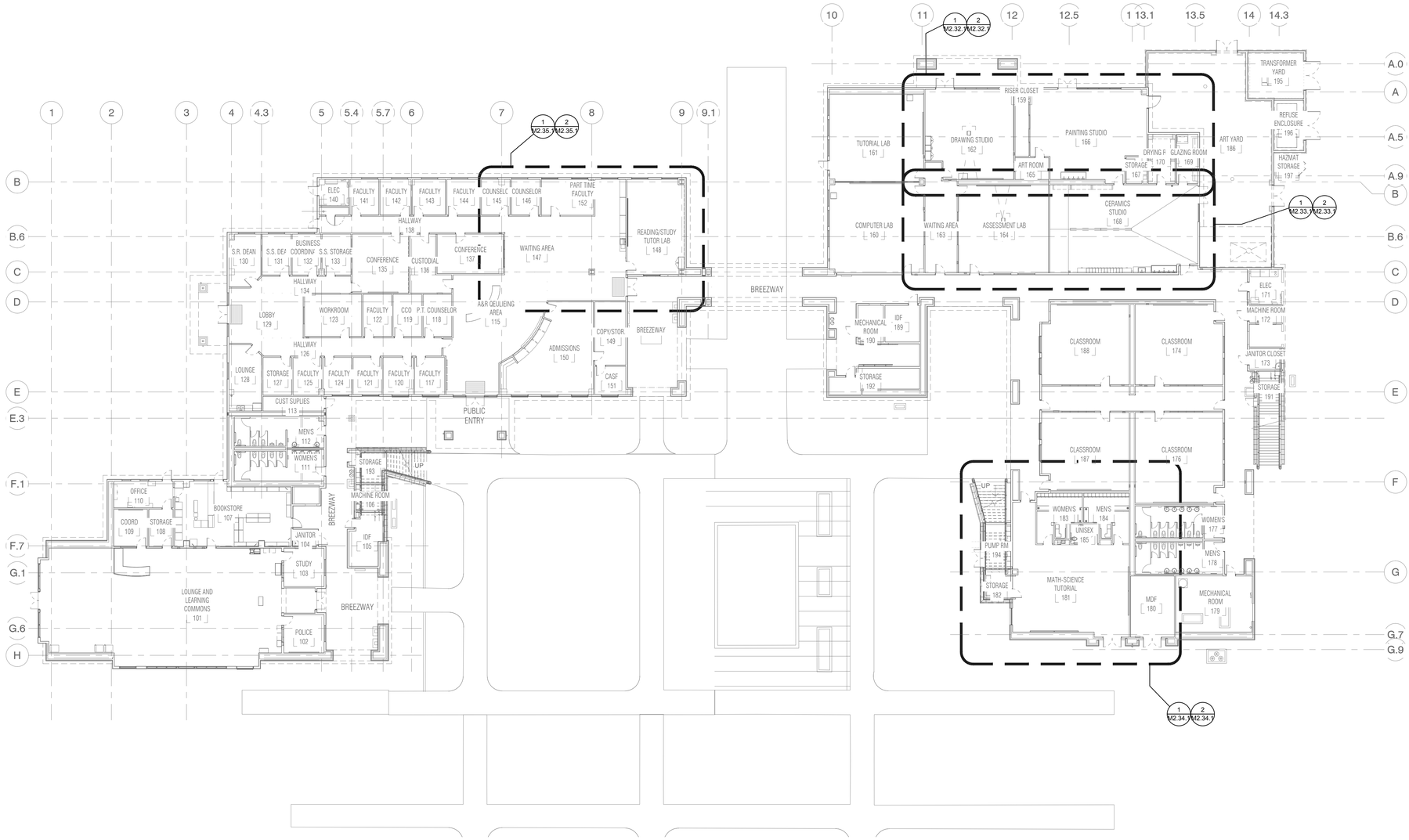

1 FIRST FLOOR OVERALL PLAN - MECHANICAL

0 8' 16' 32'

SCALE: 1/16"=1'-0"

NOLL & TAM ARCHITECTS

729 Heinz Avenue
Berkeley, CA 94710
tel 510.542.2200
fax 510.542.2201

ARCHITECTS SEAL

APPROVALS

FILE NUMBER: 07-C1

DIVISION OF THE STATE ARCHITECT

APP# 01-117630

ACS_____FLS_____SSS_____

Date:

PROJECT 2016-0538

CONTACT [illegible]

INTERFACE ENGINEERING

135 Main Street
Suite 400
San Francisco, CA 94105
TEL 415.489.7240
FAX 415.489.7289
www.interfaceengineering.com

PROJECT TITLE

CONTRA COSTA CCD

D-4002

DVC SAN RAMON CAMPUS EXPANSION

1690 Watermill Rd.
San Ramon, CA 94582

ISSUE TITLE

INCREMENT 1 - RENOVATION

ISSUE DATE 10/26/2020

NOLL & TAM JOB NUMBER 21630

REVISIONS

	DATE	DESCRIPTION

SHEET TITLE

1ST FLOOR OVERALL PLAN - MECHANICAL

SHEET NUMBER

M2.30A.1

6/21/2018 11:19:21 AM C:\Users\beckie.denio\Documents\Revit locals\DVCSR Expansion_Central 2018_beckie.denio.rvt

FILE: 0538-M2.30A.DWG - M2.30A | EDIT: 9/20/2019 9:59 AM BY SALY | PLOT: 9/29/2021 8:15 PM BY VICTOR VALENCIA

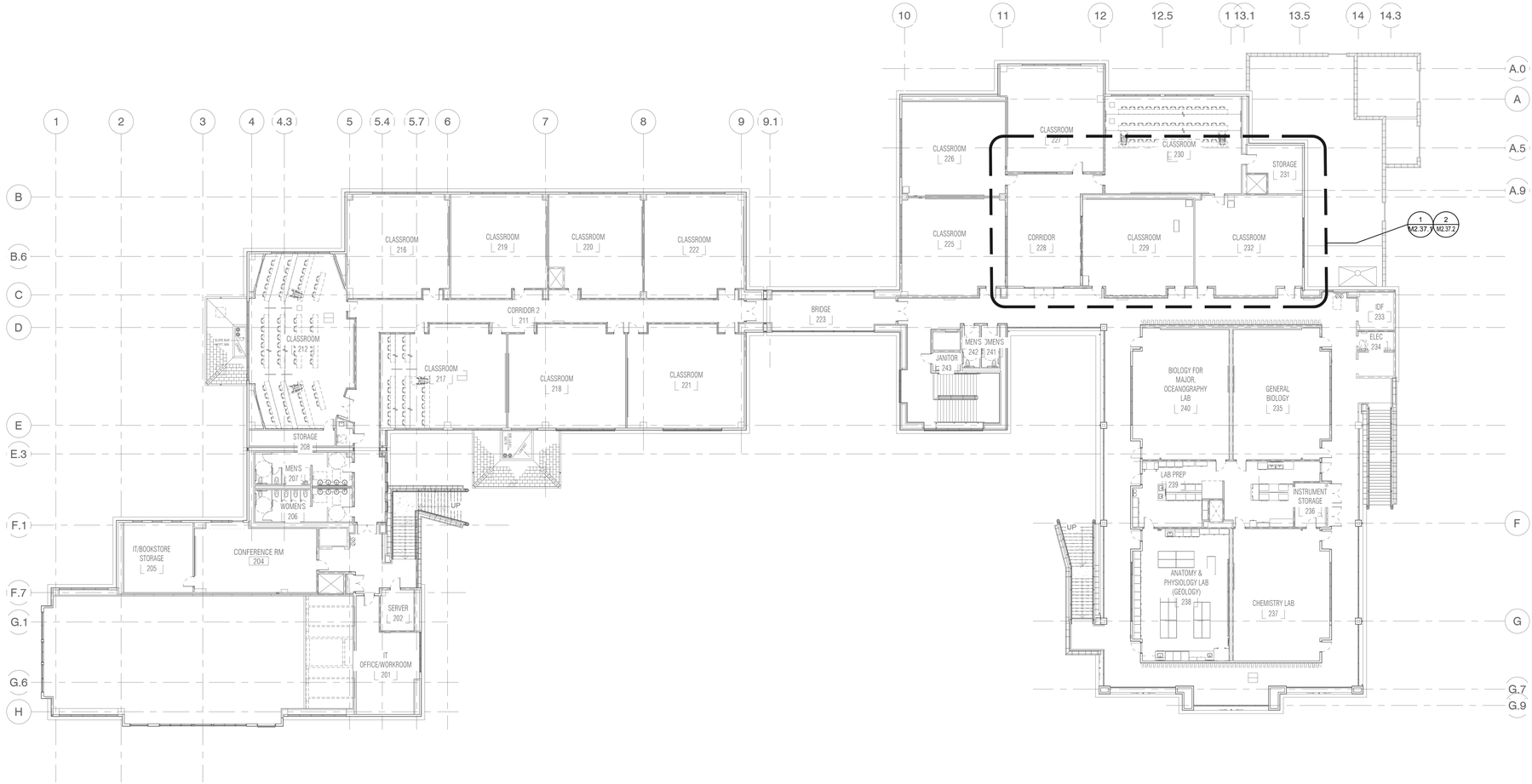

1 2ND FLOOR OVERALL PLAN - MECHANICAL

0 8' 16' 32'

SCALE: 1/16"=1'-0"

NOLL & TAM ARCHITECTS

729 Heinz Avenue
Berkeley, CA 94710
tel 510.542.2200
fax 510.542.2201

ARCHITECTS SEAL

APPROVALS

FILE NUMBER: 07-C1

DIVISION OF THE STATE ARCHITECT

APP# 01-117630

ACS_____FLS_____SSS_____

Date:

PROJECT 2016-0538

CONTACT [illegible]

INTERFACE ENGINEERING

135 Main Street
Suite 400
San Francisco, CA 94105
TEL 415.489.7240
FAX 415.489.7289
www.interfaceengineering.com

PROJECT TITLE

CONTRA COSTA CCD

D-4002

DVC SAN RAMON CAMPUS EXPANSION

1690 Watermill Rd.
San Ramon, CA 94582

ISSUE TITLE

INCREMENT 1 - RENOVATION

ISSUE DATE 10/26/2020

NOLL & TAM JOB NUMBER 21630

REVISIONS

	DATE	DESCRIPTION

SHEET TITLE

2ND FLOOR OVERALL PLAN - MECHANICAL

SHEET NUMBER

M2.30B.1

6/21/2018 11:19:21 AM C:\Users\beckie.denio\Documents\Revit locals\DVCSR Expansion_Central 2018_beckie.denio.rvt

SHEET KEYNOTES

1. REMOVE (E) SUPPLY DUCT WITH ASSOCIATED SLOT DIFFUSER.
2. REMOVE (E) SIDE WALL EXHAUST GRILLE AND CAP, TYPICAL 3
3. (E) VAV TO BE READJUSTED PER (N)CFM.
4. (E) T-STAT TO REMAIN.
5. (E)EXHAUST DUCT TO REMAIN.

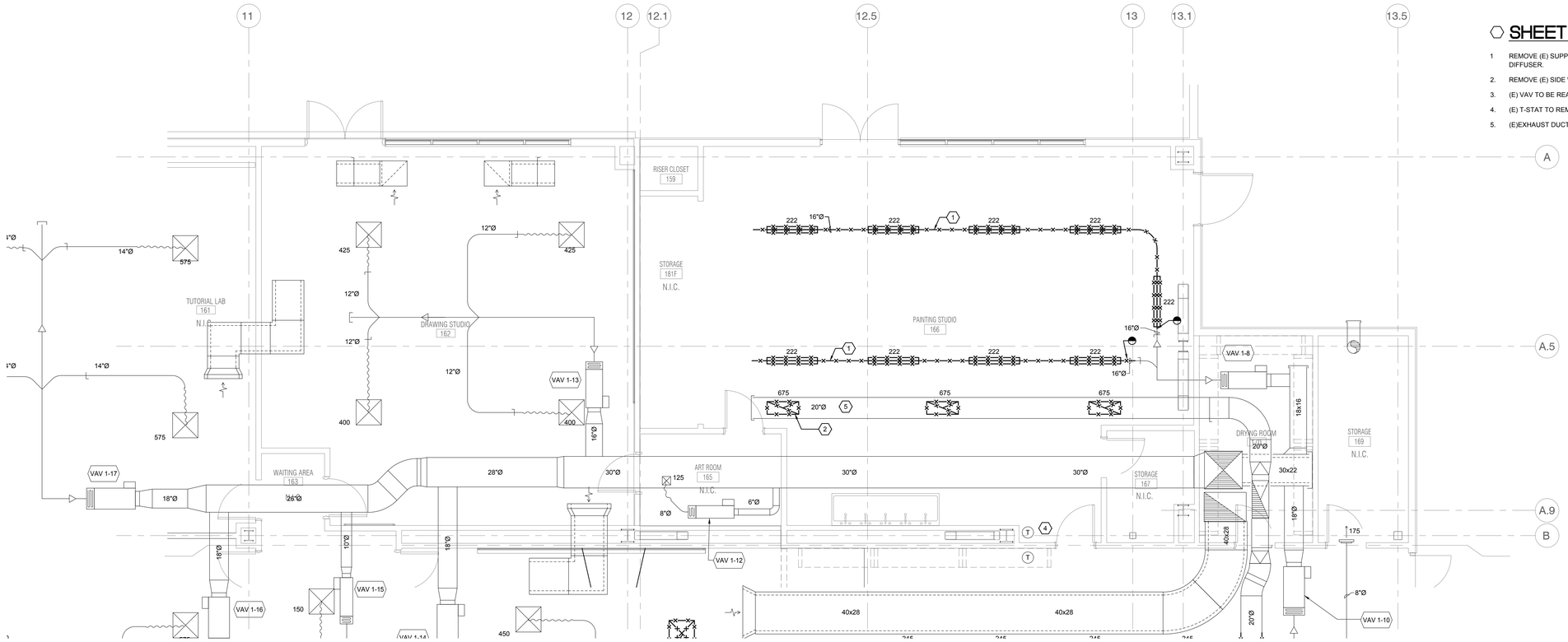

1 DEMO - 1ST FLOOR PLAN - CLASSROOM - PAINTING STUDIO - MECHANICAL

0 2' 4' 8'

SCALE: 1/4"=1'-0"

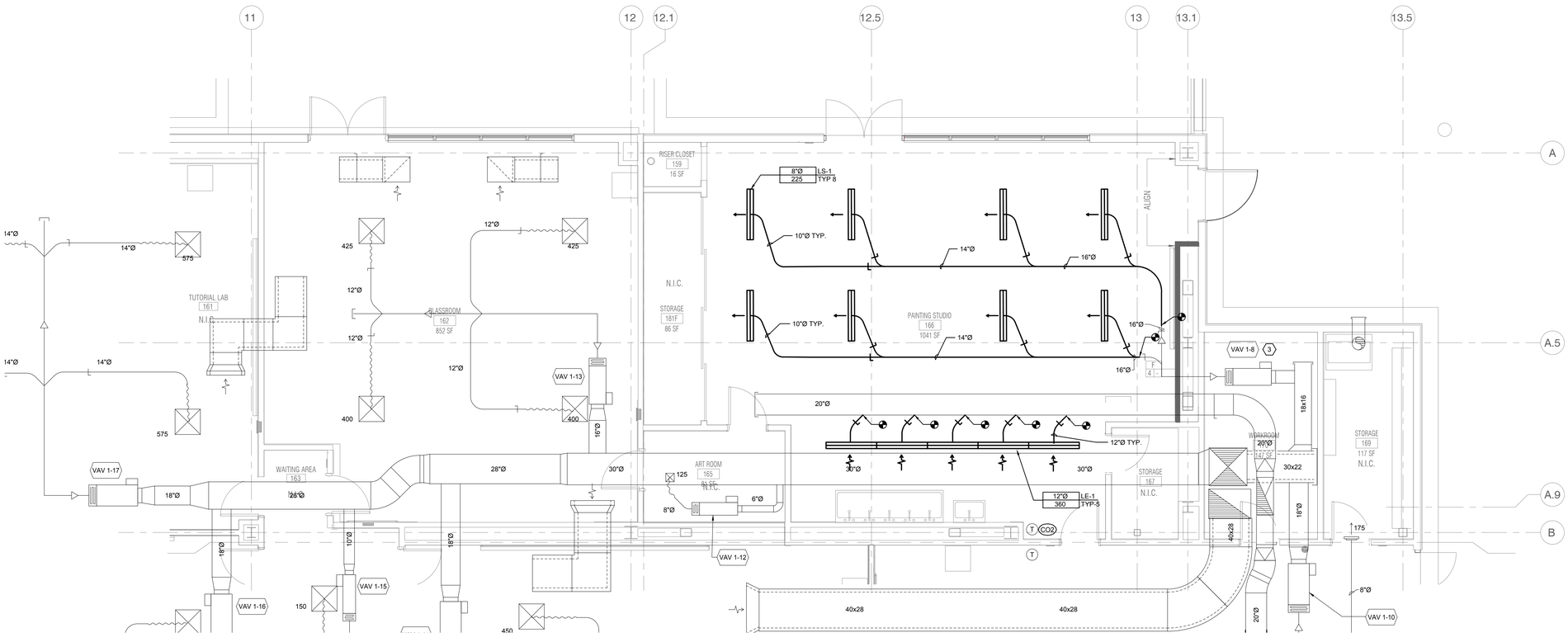

2 NEW - 1ST FLOOR PLAN - CLASSROOM - PAINTING STUDIO - MECHANICAL

0 2' 4' 8'

SCALE: 1/4"=1'-0"

DIFFUSER/GRILLES		
SUPPLY DIFFUSER		
TAG	NECK SIZE	CFM RANGE
CD-1	8"Ø	0-200
CD-1	10"Ø	201-310
CD-1	12"Ø	311-400
RETURN GRILLES		
TAG	NECK SIZE	CFM RANGE
CRG-1	8"Ø	0-210
CRG-1	10"Ø	211-370
CRG-1	12"Ø	375-600
EXHAUST GRILLES		
TAG	NECK SIZE	CFM RANGE
CEG-1	8"Ø	0-210
CEG-1	10"Ø	211-370
CEG-1	12"Ø	375-600

NOTE:
1. SEE DIFFUSER, REGISTER AND GRILLE SCHEDULE
2. ALL DIFFUSERS , REGISTERS AND GRILLES TO BE TYPE CD-1, CRG-1 AND CEG-1 UNLESS NOTED OTHERWISE.
3. ALL BRANCH DUCTWORK TO DIFFUSERS, REGISTERS AND GRILLES TO BE SAME SIZE AS NECK SIZE, UNLESS NOTED OTHERWISE.

NOLL & TAM ARCHITECTS
729 Heinz Avenue
Berkeley, CA 94710
tel 510.542.2200
fax 510.542.2201

ARCHITECTS SEAL

APPROVALS
FILE NUMBER: 07-C1

DIVISION OF THE STATE ARCHITECT
APP# 01-117630
ACS_____ FLS_____ SSS_____
Date:

PROJECT 2016-0538
CONTACT Thanh Bale Sharma
INTERFACE ENGINEERING
135 Main Street
Suite 400
San Francisco, CA 94105
TEL 415.489.7240
FAX 415.489.7289
www.interfaceengineering.com

PROJECT TITLE

CONTRA COSTA CCD
D-4002
DVC SAN RAMON CAMPUS EXPANSION

1690 Watermill Rd.
San Ramon, CA 94582

ISSUE TITLE
INCREMENT 1 - RENOVATION

ISSUE DATE	10/26/2020
NOLL & TAM JOB NUMBER	21630

REVISIONS

	DATE	DESCRIPTION

SHEET TITLE
DEMO & NEW - 1ST FLOOR - EAST - CLASSROOM - PAINTING STUDIO - MECHANICAL

SHEET NUMBER
M2.32.1

6/21/2018 11:19:21 AM C:\Users\becke.demo\Documents\Revit locals\DVCSR Expansion_Central 2018_becke.demo.rvt

SHEET KEYNOTES

1. REMOVE (E)SUPPLY DUCT WITH ASSOCIATED SLOT DIFFUSER.
2. REMOVE (E)EXHAUST DUCT.
3. (E)VAV TO BE READJUSTED PER (N)CFM.
4. (E)T-STAT TO REMAIN.
5. RELOCATE (E)DIFFUSER PER (N)PLAN.

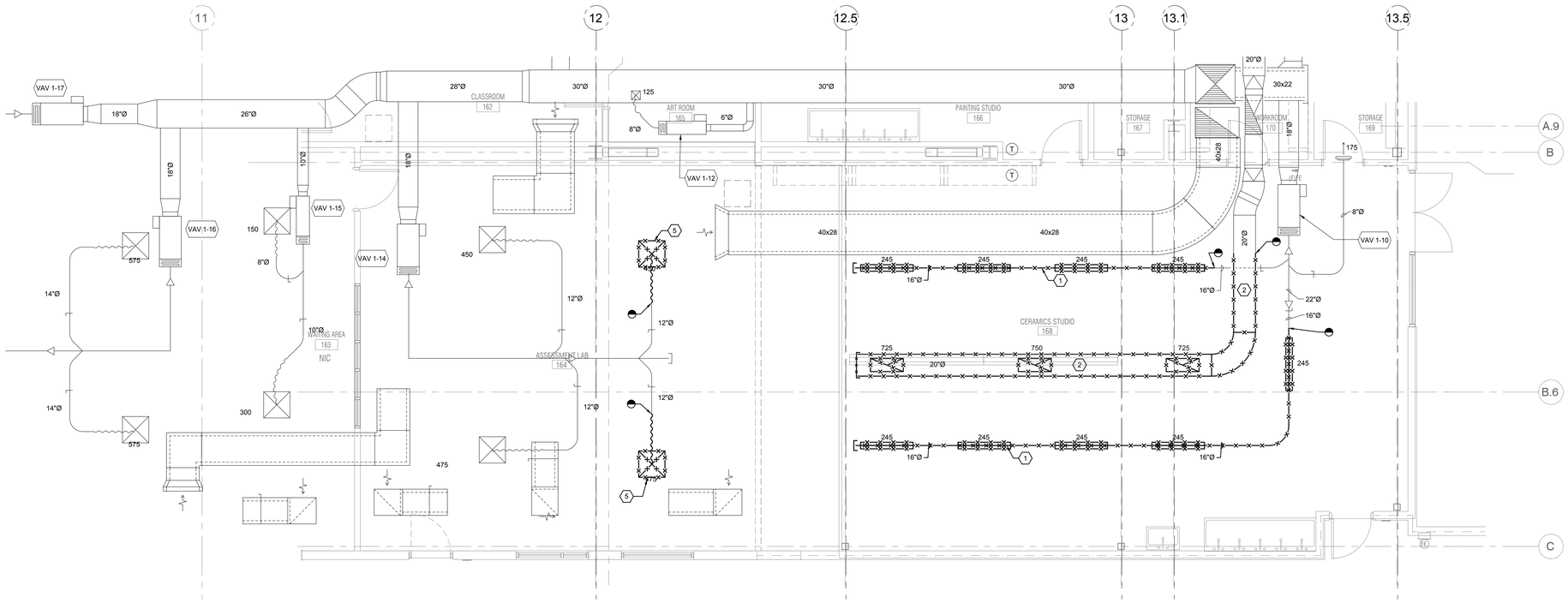

1 DEMO -1ST FLOOR PLAN - CLASSROOM - CERAMIC STUDIO - MECHANICAL

0 2' 4' 8'

SCALE: 1/4"=1'-0"

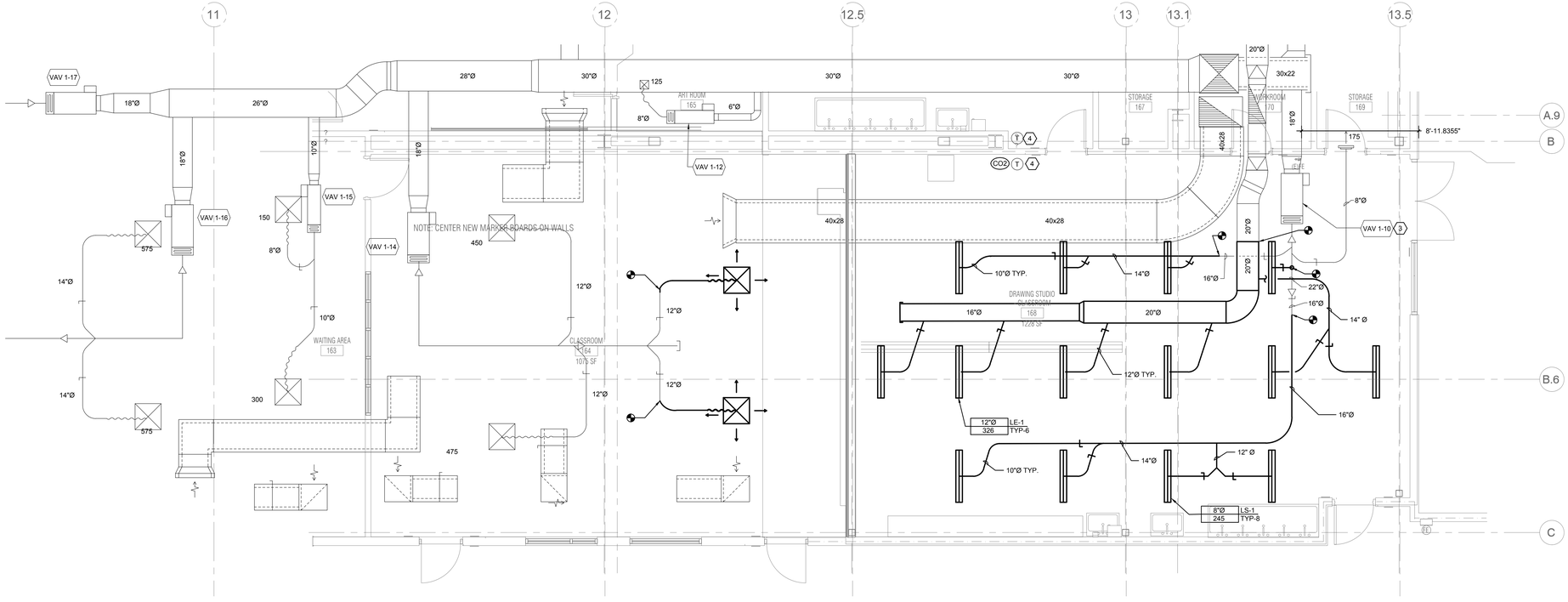

2 NEW - 1ST FLOOR PLAN - CLASSROOM - DRAWING STUDIO - MECHANICAL

0 2' 4' 8'

SCALE: 1/4"=1'-0"

DIFFUSER/GRILLES		
SUPPLY DIFFUSER		
TAG	NECK SIZE	CFM RANGE
CD-1	8"Ø	0-200
CD-1	10"Ø	201-310
CD-1	12"Ø	311-400
RETURN GRILLES		
TAG	NECK SIZE	CFM RANGE
CRG-1	8"Ø	0-210
CRG-1	10"Ø	211-370
CRG-1	12"Ø	375-600
EXHAUST GRILLES		
TAG	NECK SIZE	CFM RANGE
CEG-1	8"Ø	0-210
CEG-1	10"Ø	211-370
CEG-1	12"Ø	375-600

NOTE:
1. SEE DIFFUSER, REGISTER AND GRILLE SCHEDULE
2. ALL DIFFUSERS , REGISTERS AND GRILLES TO BE TYPE CD-1, CRG-1 AND CEG-1 UNLESS NOTED OTHERWISE.
3. ALL BRANCH DUCTWORK TO DIFFUSERS, REGISTERS AND GRILLES TO BE SAME SIZE AS NECK SIZE, UNLESS NOTED OTHERWISE.

NOLL & TAM ARCHITECTS

729 Heinz Avenue
Berkeley, CA 94710
tel 510.542.2200
fax 510.542.2201

ARCHITECTS SEAL

APPROVALS

FILE NUMBER: 07-C1

DIVISION OF THE STATE ARCHITECT

APP# 01-117630

ACS_____FLS_____SSS_____

Date:

PROJECT 2016-0538
CONTACT Thanh Bale Sharma

INTERFACE ENGINEERING

135 Main Street
Suite 400
San Francisco, CA 94105
TEL 415.489.7240
FAX 415.489.7289
www.interfaceengineering.com

PROJECT TITLE

CONTRA COSTA CCD
D-4002
DVC SAN RAMON CAMPUS EXPANSION

1690 Watermill Rd.
San Ramon, CA 94582

ISSUE TITLE

INCREMENT 1 - RENOVATION

ISSUE DATE	10/26/2020
NOLL & TAM JOB NUMBER	21630

REVISIONS

	DATE	DESCRIPTION

SHEET TITLE

DEMO & NEW - 1ST FLOOR - EAST - CLASSROOM - DRAWING STUDIO - MECHANICAL

SHEET NUMBER

M2.33.1

6/21/2018 11:19:21 AM C:\Users\becke.demo\Documents\Revit locals\DVCSR Expansion_Central 2018_becke.demo.rvt

SHEET KEYNOTES

1. RELOCATE (E)DIFFUSER PER (N)PLAN.
2. DEMO TRANSFER DUCT AND GRILLES.
3. DEMO EXISTING EXHAUST DUCT AND GRILLES.
4. DEMO (E)EXHAUST GRILLE AND REPLACE PER (N) PLAN.
5. RELOCATE (E)T-STAT PER NEW PLAN.
6. PROVIDE HWS/R PIPING CONNECTION TO REHEAT COIL.

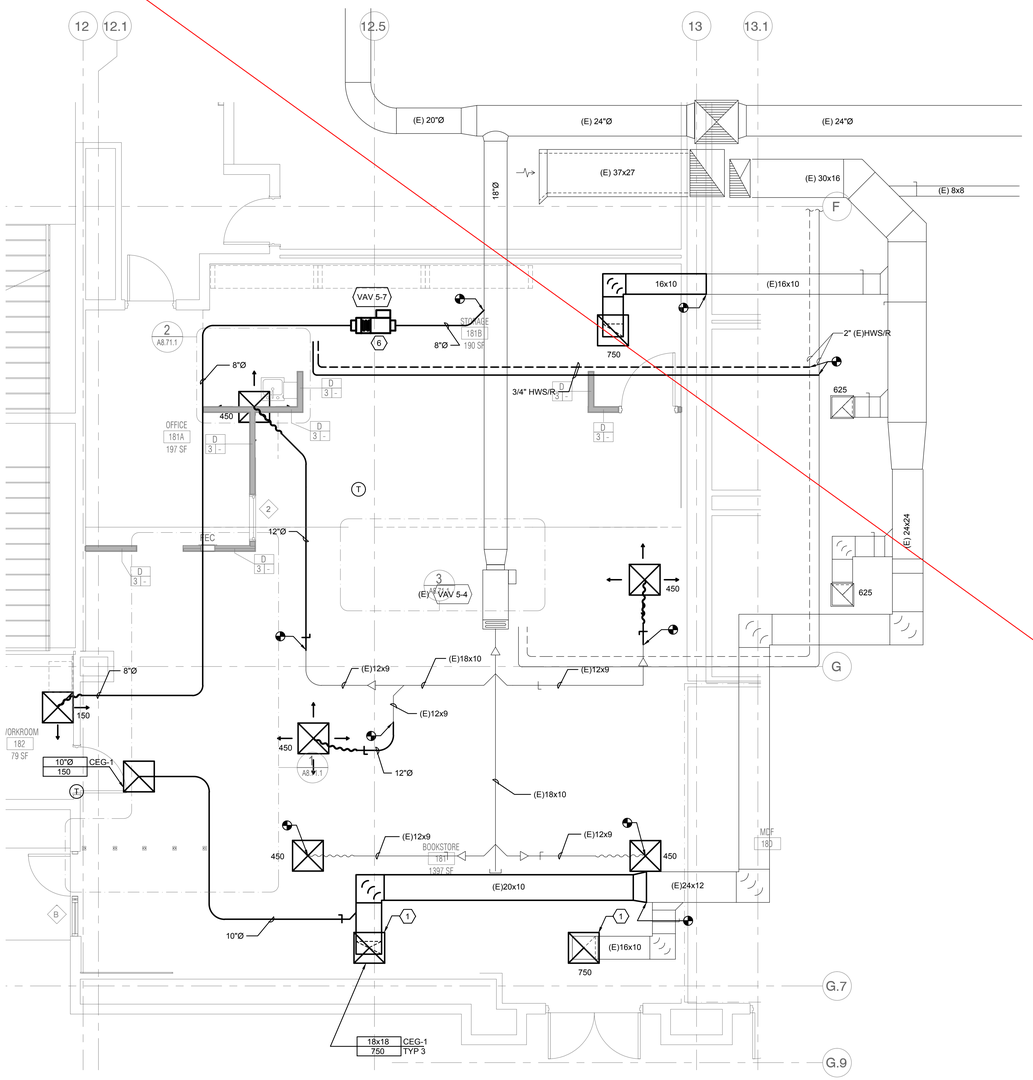

1 NEW - 1ST FLOOR PLAN - BOOKSTORE - MECHANICAL

0 2' 4' 8'
SCALE: 1/4"=1'-0"

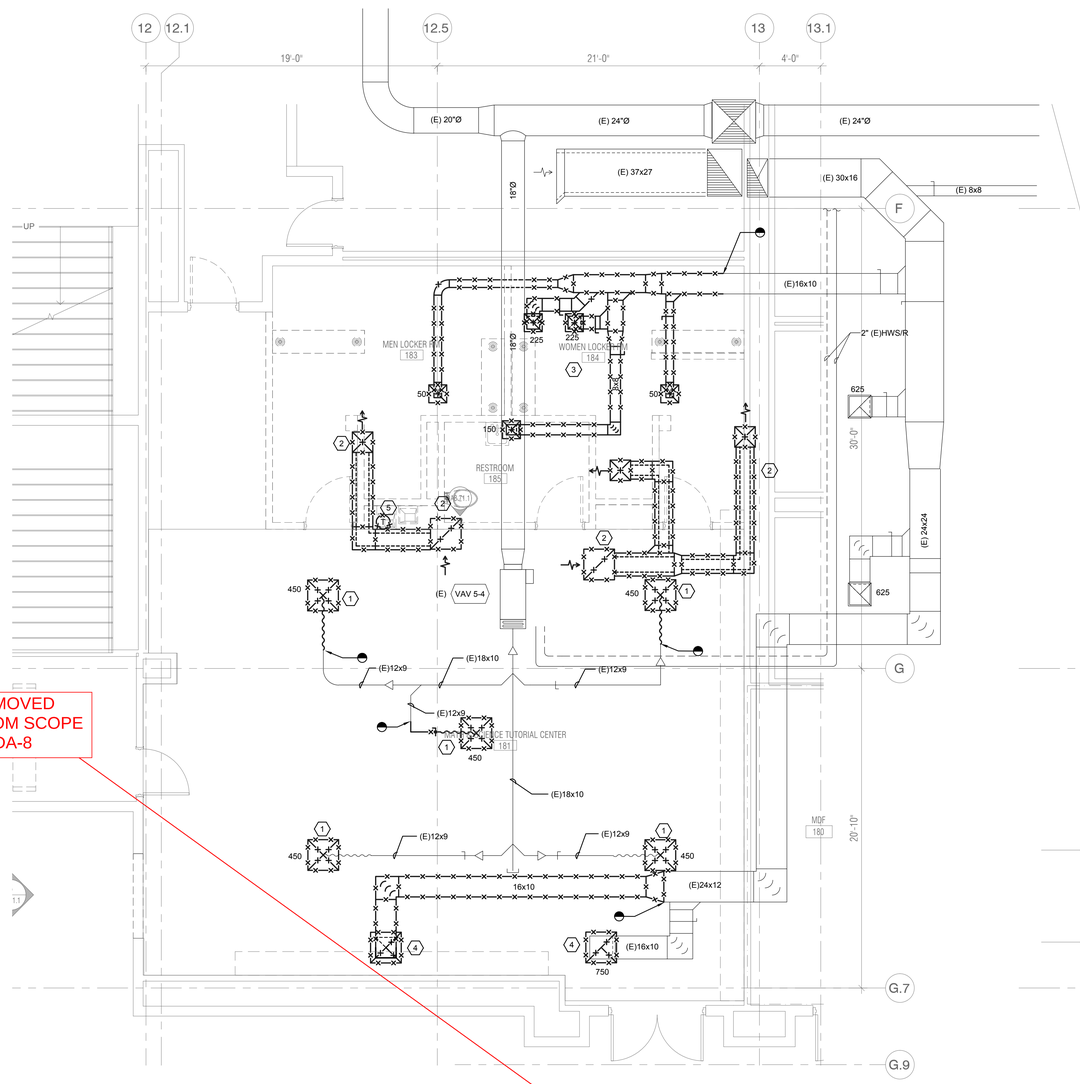

REMOVED FROM SCOPE CCDA-8

2 DEMO - 1ST FLOOR PLAN - MATH-SCIENCE TUTORIAL - MECHANICAL

0 2' 4' 8'
SCALE: 1/4"=1'-0"

DIFFUSER/GRILLES		
SUPPLY DIFFUSER		
TAG	NECK SIZE	CFM RANGE
CD-1	8"Ø	0-200
CD-1	10"Ø	201-310
CD-1	12"Ø	311-400
RETURN GRILLES		
TAG	NECK SIZE	CFM RANGE
CRG-1	8"Ø	0-210
CRG-1	10"Ø	211-370
CRG-1	12"Ø	375-600
EXHAUST GRILLES		
TAG	NECK SIZE	CFM RANGE
CEG-1	8"Ø	0-210
CEG-1	10"Ø	211-370
CEG-1	12"Ø	375-600

NOTE:
1. SEE DIFFUSER, REGISTER AND GRILLE SCHEDULE
2. ALL DIFFUSERS , REGISTERS AND GRILLES TO BE TYPE CD-1, CRG-1 AND CEG-1 UNLESS NOTED OTHERWISE.
3. ALL BRANCH DUCTWORK TO DIFFUSERS, REGISTERS AND GRILLES TO BE SAME SIZE AS NECK SIZE, UNLESS NOTED OTHERWISE.

NOLL & TAM ARCHITECTS
729 Heinz Avenue
Berkeley, CA 94710
tel 510.542.2200
fax 510.542.2201

ARCHITECTS SEAL

APPROVALS
FILE NUMBER: 07-C1
DIVISION OF THE STATE ARCHITECT
APP# 01-117630
ACS_____FLS_____SSS_____
Date:

PROJECT 2016-0538
CONTACT Jhankhola Sarma
INTERFACE ENGINEERING
135 Main Street
Suite 400
San Francisco, CA 94105
TEL 415.489.7240
FAX 415.489.7289
www.interfaceengineering.com

PROJECT TITLE
CONTRA COSTA CCD
D-4002
DVC SAN RAMON CAMPUS EXPANSION
1690 Watermill Rd.
San Ramon, CA 94582

ISSUE TITLE
INCREMENT 1 - RENOVATION

ISSUE DATE 10/26/2020
NOLL & TAM JOB NUMBER 21630
REVISIONS
DATE	DESCRIPTION

SHEET TITLE
DEMO & NEW - 1ST FLOOR - EAST - BOOKSTORE - MECHANICAL

SHEET NUMBER
M2.34.1

6/21/2018 11:19:21 AM C:\Users\beckie.denio\Documents\Revit locals\DVCSR Expansion_Central 2018_beckie.denio.rvt

FILE: 0538-M2.34.DWG - M2.34 | EDIT: 10/19/2018 3:50 PM BY EDWINV | PLOT: 9/29/2021 8:15 PM BY VICTOR VALENCIA

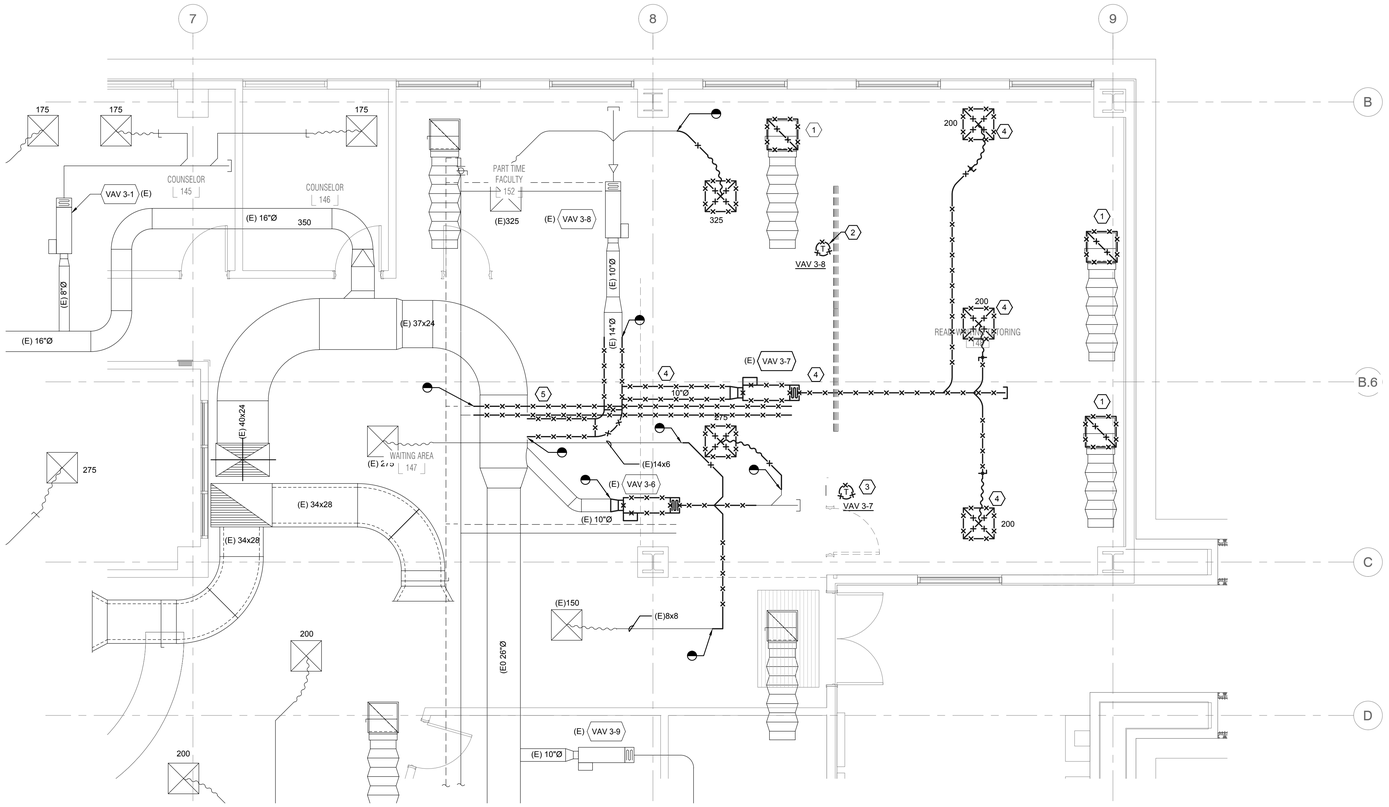

1 DEMO - 1ST FLOOR PLAN - WRITING TUTORIAL - MECHANICAL

0 2' 4' 8'

SCALE: 1/4"=1'-0"

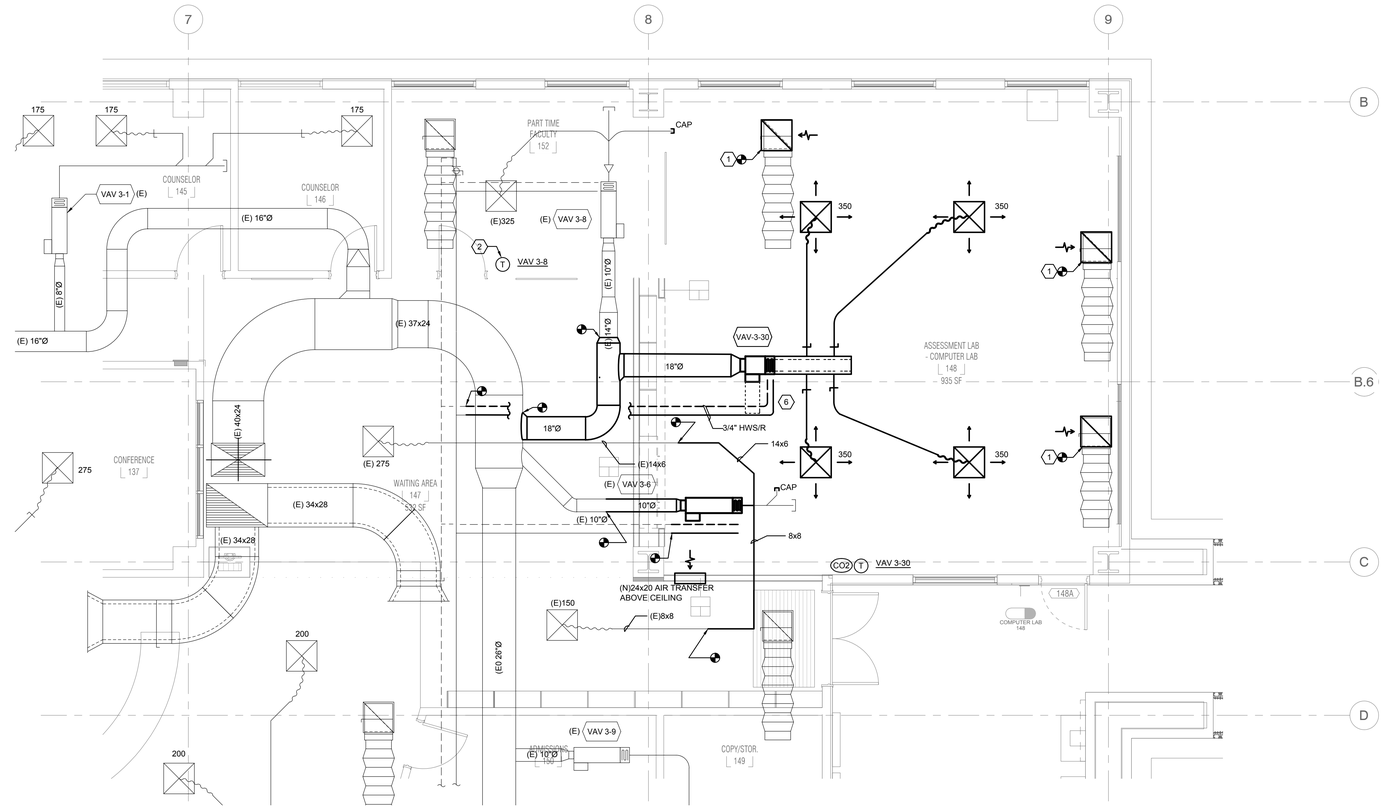

2 NEW - 1ST FLOOR PLAN - ASSESSMENT LAB - MECHANICAL

0 2' 4' 8'

SCALE: 1/4"=1'-0"

SHEET KEYNOTES

1. RELOCATE EXISTING DIFFUSERS TO NEW ACT CEILING LAYOUT. SEE ARCH. RCP. EXTEND FLEXIBLE DUCT AS REQUIRED TO FACILITATE RELOCATION.
2. RELOCATE EXISTING THERMOSTAT PER (N)PLAN.
3. DEMO (E)T-STAT.
4. DEMO (E)BOX DUCTWORK AND ASSOCIATED DIFFUSERS AS SHOWN.
5. DEMO HWS/R PIPING BRANCHES FOR REPLACEMENT PER (N)PLAN.
6. PROVIDE HWS/R PIPING CONNECTION TO (N)REHEAT COIL.

DIFFUSER/GRILLES		
SUPPLY DIFFUSER		
TAG	NECK SIZE	CFM RANGE
CD-1	8"Ø	0-200
CD-1	10"Ø	201-310
CD-1	12"Ø	311-400
RETURN GRILLES		
TAG	NECK SIZE	CFM RANGE
CRG-1	8"Ø	0-210
CRG-1	10"Ø	211-370
CRG-1	12"Ø	375-600
EXHAUST GRILLES		
TAG	NECK SIZE	CFM RANGE
CEG-1	8"Ø	0-210
CEG-1	10"Ø	211-370
CEG-1	12"Ø	375-600

NOTE:
1. SEE DIFFUSER, REGISTER AND GRILLE SCHEDULE
2. ALL DIFFUSERS , REGISTERS AND GRILLES TO BE TYPE CD-1, CRG-1 AND CEG-1 UNLESS NOTED OTHERWISE.
3. ALL BRANCH DUCTWORK TO DIFFUSERS, REGISTERS AND GRILLES TO BE SAME SIZE AS NECK SIZE, UNLESS NOTED OTHERWISE.

NOLL & TAM ARCHITECTS
729 Heinz Avenue
Berkeley, CA 94710
tel 510.542.2200
fax 510.542.2201

ARCHITECTS SEAL

APPROVALS
FILE NUMBER: 07-C1

DIVISION OF THE STATE ARCHITECT
APP# 01-117630
ACS_____ FLS_____ SSS_____
Date:

PROJECT 2016-0538
CONTACT Thanh Boie-Sharma
INTERFACE ENGINEERING
135 Main Street
Suite 400
San Francisco, CA 94105
TEL 415.489.7240
FAX 415.489.7289
www.interfaceengineering.com

PROJECT TITLE

CONTRA COSTA CCD
D-4002
DVC SAN RAMON CAMPUS EXPANSION

1690 Watermill Rd.
San Ramon, CA 94582

ISSUE TITLE
INCREMENT 1 - RENOVATION

ISSUE DATE	10/26/2020
NOLL & TAM JOB NUMBER	21630

REVISIONS

	DATE	DESCRIPTION

SHEET TITLE
DEMO & NEW - 1ST FLOOR - WEST - ASSESSMENT LAB - MECHANICAL

SHEET NUMBER
M2.35.1

6/21/2018 11:19:21 AM C:\Users\becke.demo\Documents\Revit locals\DVCSR Expansion_Central 2018_becke.demo.rvt

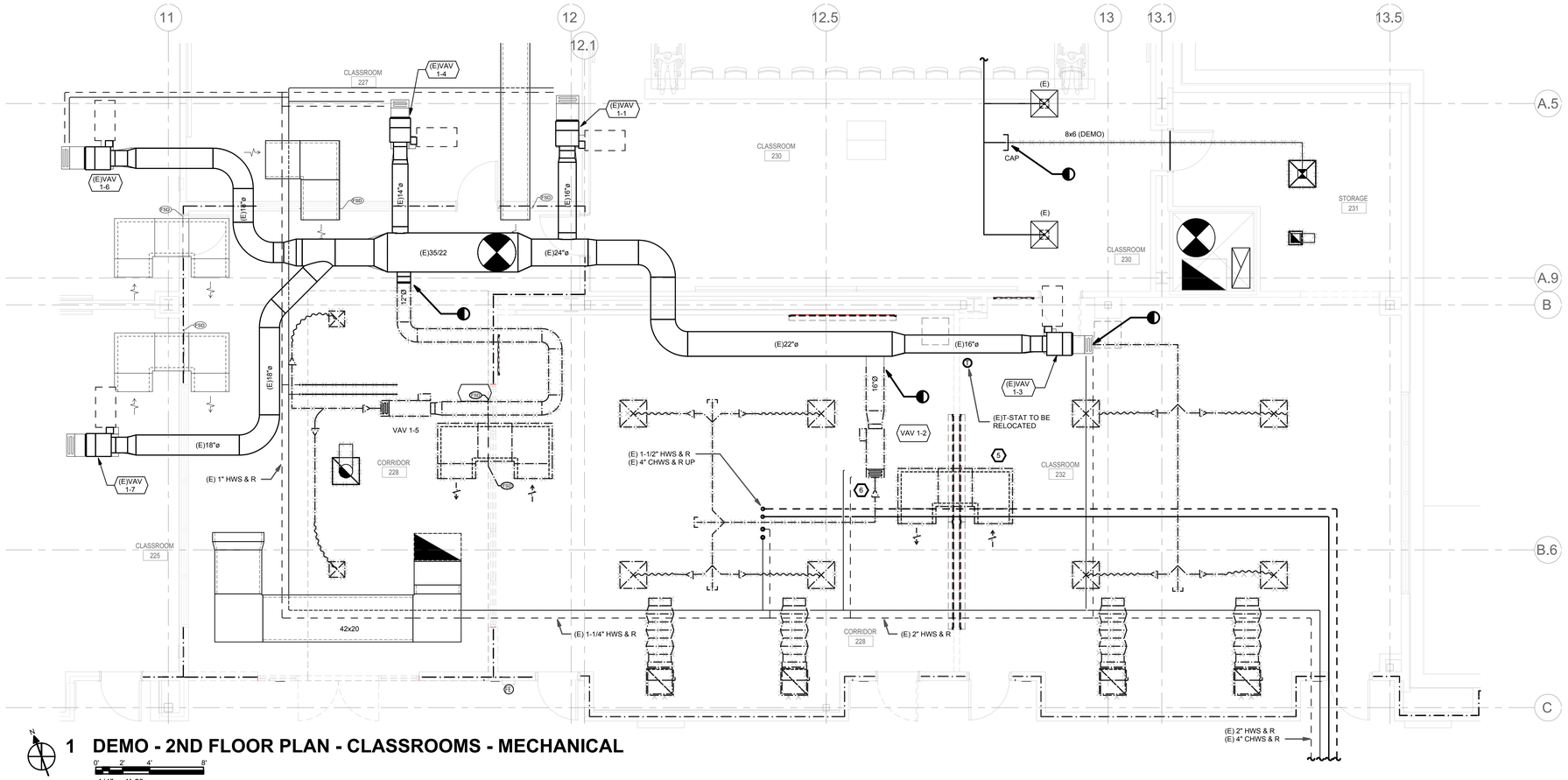

1 DEMO - 2ND FLOOR PLAN - CLASSROOMS - MECHANICAL

0' 2' 4' 8'

1/4" = 1'-0"

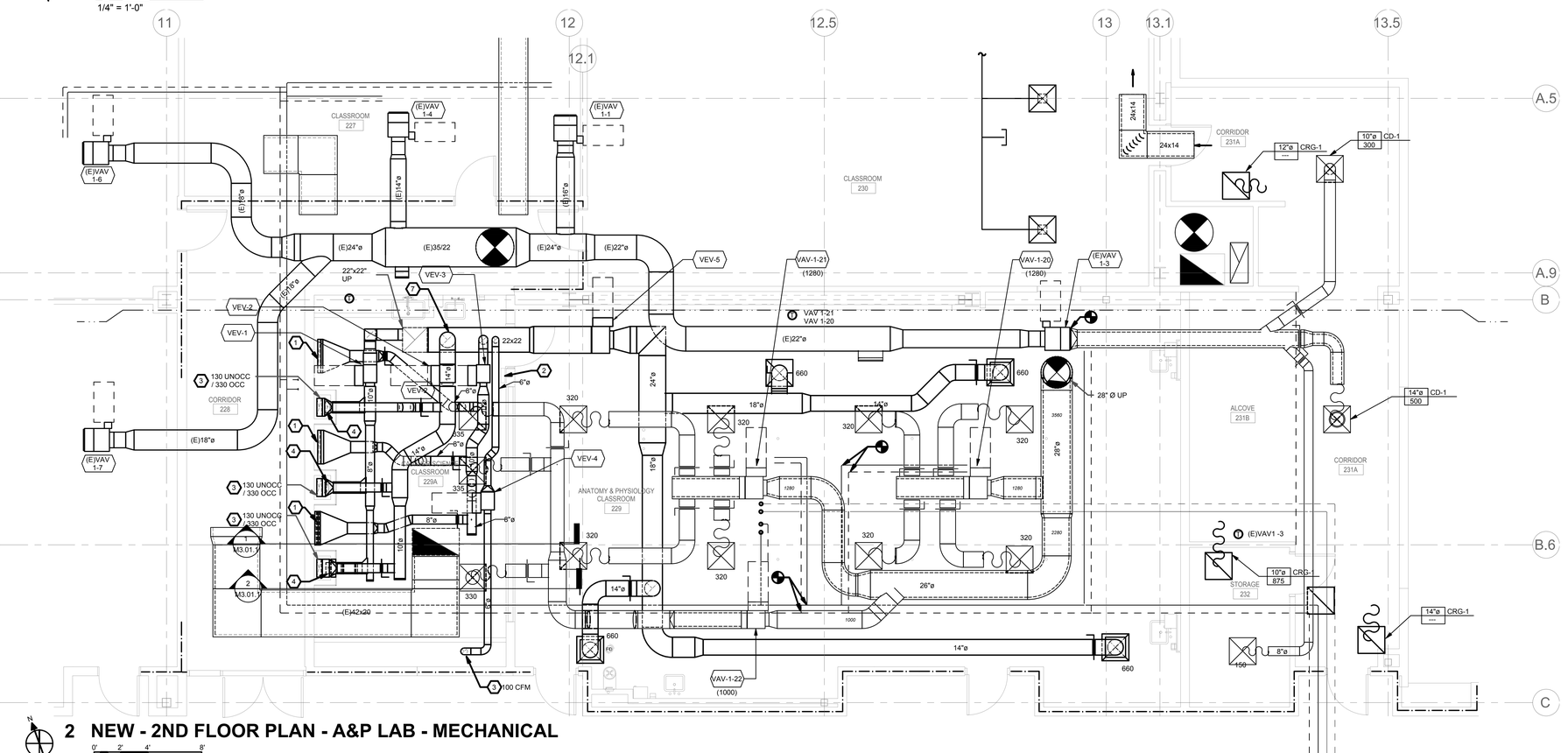

2 NEW - 2ND FLOOR PLAN - A&P LAB - MECHANICAL

0' 2' 4' 8'

1/4" = 1'-0"

SHEET KEYNOTES

1. 2x30 S.S EXHAUST DROP ALONG WALL TO EXHAUST ABOVE COUNTER (3'-6"), PLACE IN THE MIDDLE OF ACCESSIBLE COUNTER BAY. PROVIDE 24x1 SLOT DIFFUSER AND BALANCE TO 175 CFM, TYP. 3.
2. LOCAL EXHAUST CONTROL PANEL WITH CONTROLS FOR LOW WALL EXHAUST ON/OFF, CADAVER TABLE ON/OFF AND COUNTER EXHAUST ON/OFF. UNOCCUPIED/OCCUPIED VIA OCCUPANCY SENSOR.
3. 16x4 S.S DROP IN SHAFT TO SERVE 10x10 LOW WALL EXHAUST GRILLE 6" AFF, TYP. 3.
4. 10x4 S.S EXHAUST DROP IN SHAFT WITH TRANSITION TO 6"D TO SERVE CADAVER TABLE. BALANCE TO 175 CFM, TYP. 3
5. DEMO THE DUCTWORK AS SHOWN ON DEMOLITION PLAN(TYP.)
6. DEMO THE PIPEWORK BACK TO THE PIPE MAIN AND CAP IT.
7. PROVIDE 45° CONNECTION TO TOP OF THE MAIN, TYPICAL

DIFFUSER/GRILLES		
SUPPLY DIFFUSER		
TAG	NECK SIZE	CFM RANGE
CD-1	8"Ø	0-200
CD-1	10"Ø	201-310
CD-1	12"Ø	311-400
RETURN GRILLES		
TAG	NECK SIZE	CFM RANGE
CRG-1	8"Ø	0-210
CRG-1	10"Ø	211-370
CRG-1	12"Ø	375-600
EXHAUST GRILLES		
TAG	NECK SIZE	CFM RANGE
CEG-1	8"Ø	0-210
CEG-1	10"Ø	211-370
CEG-1	12"Ø	375-600

NOTE:
1. SEE DIFFUSER, REGISTER AND GRILLE SCHEDULE
2. ALL DIFFUSERS , REGISTERS AND GRILLES TO BE TYPE CD-1, CRG-1 AND CEG-1 UNLESS NOTED OTHERWISE.
3. ALL BRANCH DUCTWORK TO DIFFUSERS, REGISTERS AND GRILLES TO BE SAME SIZE AS NECK SIZE, UNLESS NOTED OTHERWISE.

NOLL & TAM ARCHITECTS
729 Heinz Avenue
Berkeley, CA 94710
tel 510.542.2200
fax 510.542.2201

ARCHITECTS SEAL

APPROVALS
FILE NUMBER: 07-C1

DIVISION OF THE STATE ARCHITECT
APP# 01-117630
ACS_____ FLS_____ SSS_____
Date:

PROJECT 2016-0538
CONTACT Thanh Bale-Surma
INTERFACE ENGINEERING
135 Main Street
Suite 400
San Francisco, CA 94105
TEL 415.489.7240
FAX 415.489.7289
www.interfaceengineering.com

PROJECT TITLE

CONTRA COSTA CCD
D-4002
DVC SAN RAMON CAMPUS EXPANSION

1690 Watermill Rd.
San Ramon, CA 94582

ISSUE TITLE
INCREMENT 1 - RENOVATION

ISSUE DATE 10/26/2020
NOLL & TAM JOB NUMBER 21630

REVISIONS
	DATE	DESCRIPTION

SHEET TITLE
DEMO & NEW - 2ND FLOOR - EAST - A&P LAB - MECHANICAL

SHEET NUMBER
M2.37.1

6/21/2018 11:19:21 AM C:\Users\beckie.demo\Documents\Revit locals\DVCSR Expansion_Central 2018_beckie.demo.rvt

FILE: 0538-M2.37 - REVIT EXPORT.DWG - LAYOUT1 | EDIT: 10/26/2020 4:33 PM BY YEWONJ | PLOT: 9/29/2021 8:16 PM BY VICTOR VALENCIA

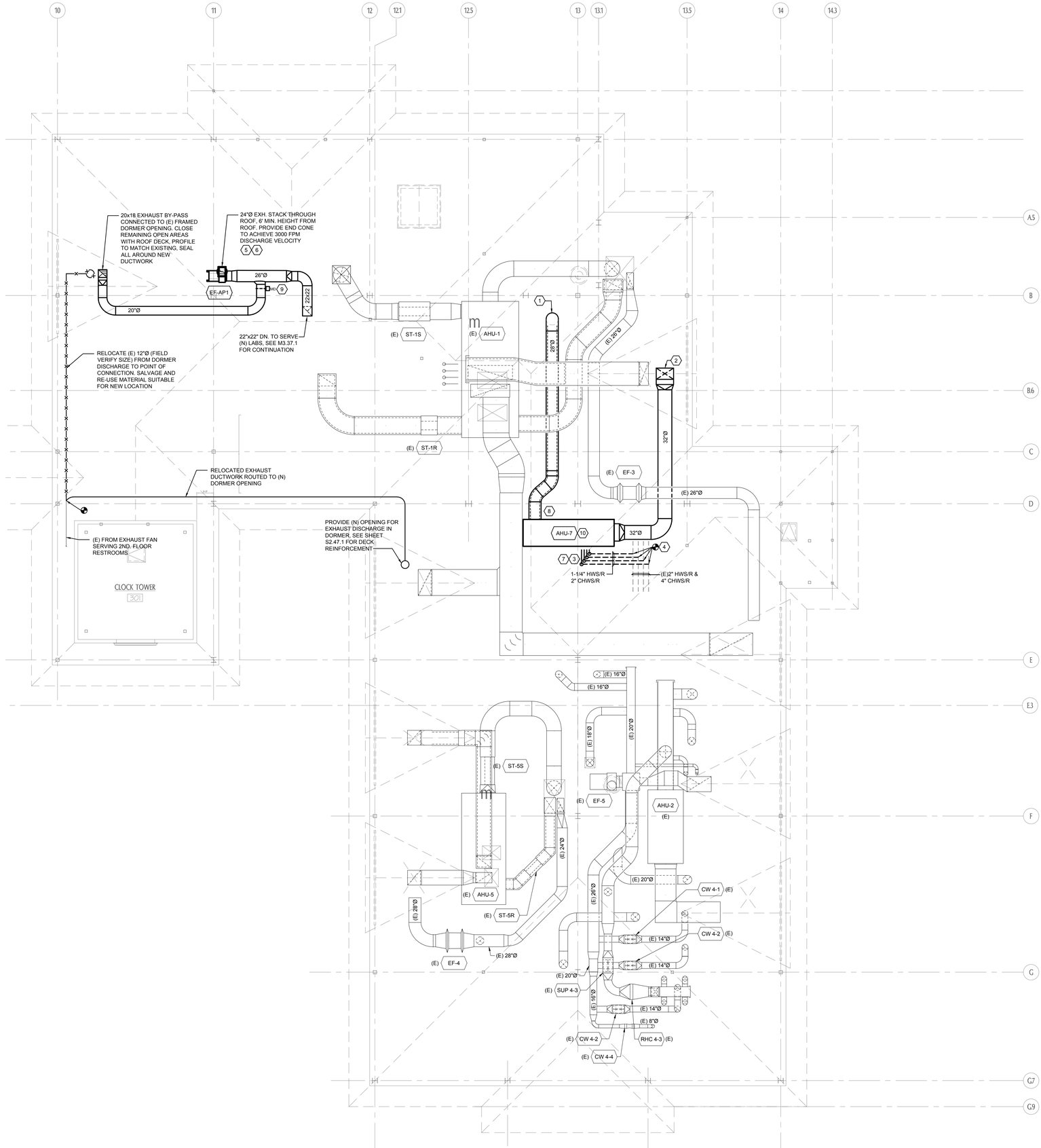

1 ATTIC FLOOR PLAN - EAST - MECHANICAL

0 4' 8' 16'

SCALE: 1/8"=1'-0"

SHEET KEYNOTES

1. 28"Ø SA DOWN THROUGH ATTIC FLOOR TO SERVE (N) LABS.
2. (N) 40"x26" O.A. OPENING IN METAL DECK OF DORMER. CONNECT DUCT AND FRAME AROUND OPENING TO SUPPORT DECK AND DUCTWORK. SEE 1/S2.47
3. CHWS/R AND HWS/R FROM 2ND FLOOR CEILING SPACE THROUGH ATTIC'S FLOOR DECK TO SERVE (N) AHU-7.
4. POINT OF CONNECTION TO (E) CHWS/R AND HWS/R IN 2ND FLOOR CEILING SPACE.
5. PROVIDE (3) GUIDE WIRES ATTACHED TO STRUCTURE HALF WAY OF STACK HEIGHT.
6. PROVIDE METAL FRAME AROUND STACK AT ROOF LEVEL FOR ROOF AND DUCT SUPPORT.
7. PROVIDE CONDENSATE DRAIN CONNECTION TO (N) AHU 9" HIGH UNIT BASE AND ROUTE TO SANITARY BELOW ATTIC FLOOR. COORDINATE WITH PLUMBING DRAWINGS.
8. COORDINATE ROUTE OF SUPPLY AIR DUCTWORK WITH EXISTING STRUCTURAL BRACING.
9. PROVIDE EXHAUST AIR BY-PASS MOTORIZED DAMPER.
10. REFER TO 8/M5.02.1 FOR UNIT MOUNTING TO ATTIC'S CONCRETE FLOOR.

NOLL & TAM ARCHITECTS

729 Heinz Avenue
Berkeley, CA 94710
tel 510.542.2200
fax 510.542.2201

ARCHITECTS SEAL

APPROVALS

FILE NUMBER: 07-C1

DIVISION OF THE STATE ARCHITECT

APP# 01-117630

ACS_____FLS_____SSS_____

Date:

PROJECT 2016-0538
CONTACT Jhanvi Bhola Sharma

INTERFACE ENGINEERING

135 Main Street
Suite 400
San Francisco, CA 94105
TEL 415.489.7240
FAX 415.489.7289
www.interfaceengineering.com

PROJECT TITLE

CONTRA COSTA CCD
D-4002
DVC SAN RAMON CAMPUS EXPANSION

1690 Watermill Rd.
San Ramon, CA 94582

ISSUE TITLE

INCREMENT 1 - RENOVATION

ISSUE DATE	10/26/2020
NOLL & TAM JOB NUMBER	21630

REVISIONS

#	DATE	DESCRIPTION

ATTIC FLOOR PLAN - EAST - MECHANICAL

SHEET TITLE

SHEET NUMBER

M2.38.1

6/21/2018 11:19:21 AM C:\Users\beckie.denio\Documents\Revit locals\DVCSR Expansion_Central 2018_beckie.denio.rvt

FILE: 0538-M2.38.DWG - M2.38.1 | EDIT: 9/20/2019 11:15 AM BY SALY | PLOT: 9/29/2021 8:16 PM BY VICTOR VALENCIA

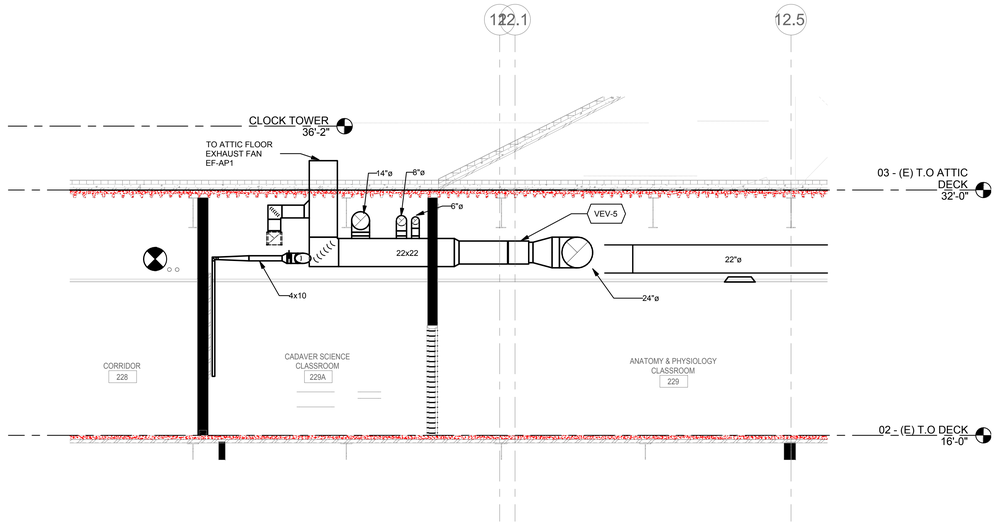

3 SECTION C

0' 4' 8' 16'

1/4" = 1'-0"

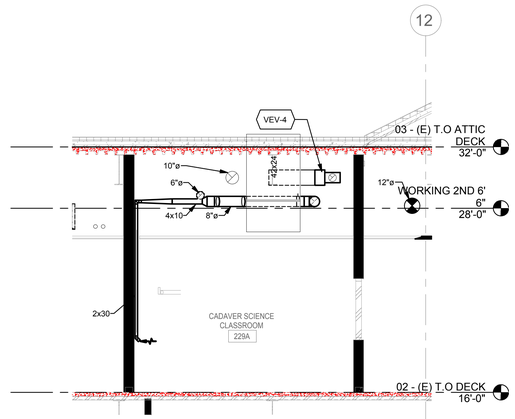

1 SECTION - A

0' 2' 4' 8'

1/4" = 1'-0"

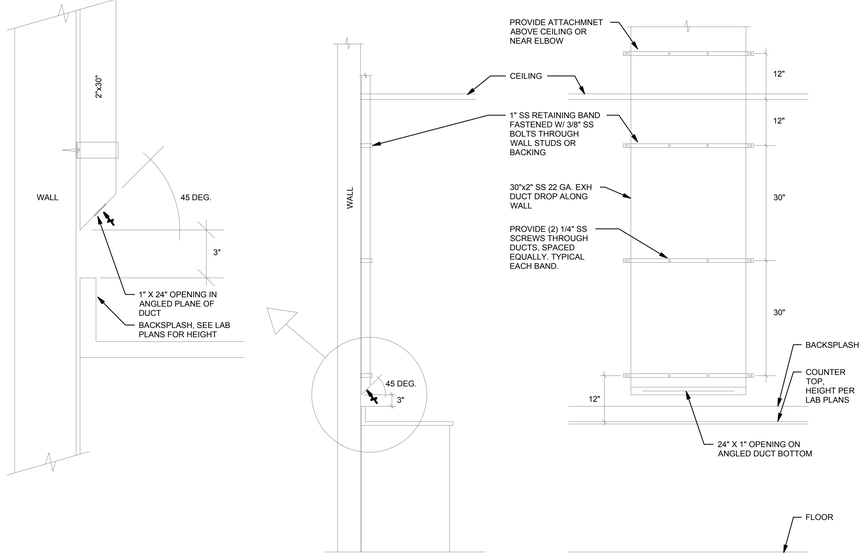

4 LAB 229A - EXHAUST DROP ATTACHMENT DETAIL

0' 2' 4' 8'

NOT TO SCALE

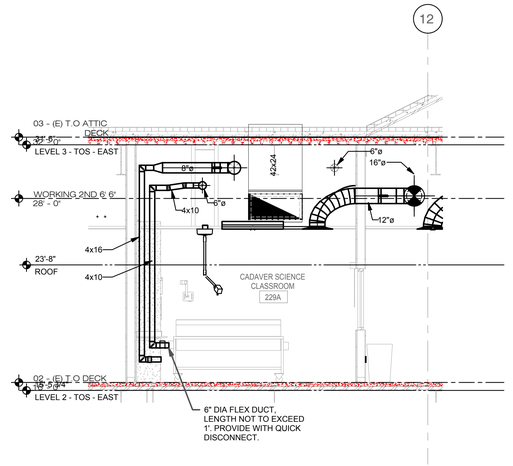

2 SECTION - B

0' 2' 4' 8'

1/4" = 1'-0"

NOLL & TAM ARCHITECTS

729 Heinz Avenue
Berkeley, CA 94710
tel 510.542.2200
fax 510.542.2201

ARCHITECTS SEAL

APPROVALS

FILE NUMBER: 07-C1

DIVISION OF THE STATE ARCHITECT

APP# 01-117630

ACS FLS SSS

Date:

PROJECT 2016-0538

CONTACT Edwin Vega

INTERFACE ENGINEERING

135 Main Street
Suite 400
San Francisco, CA 94105
TEL 415.489.7240
FAX 415.489.7289
www.interfaceengineering.com

PROJECT TITLE

CONTRA COSTA CCD

D-4002

DVC SAN RAMON CAMPUS EXPANSION & RENOVATION

1690 Watermill Rd.
San Ramon, CA 94582

ISSUE TITLE

INCREMENT 1

ISSUE DATE **11/30/2018**

NOLL & TAM JOB NUMBER **21630**

REVISIONS

	DATE	DESCRIPTION

SHEET TITLE

SECTIONS - MECHANICAL

SHEET NUMBER

M3.01.1

9/29/2021 8:24:51 PM

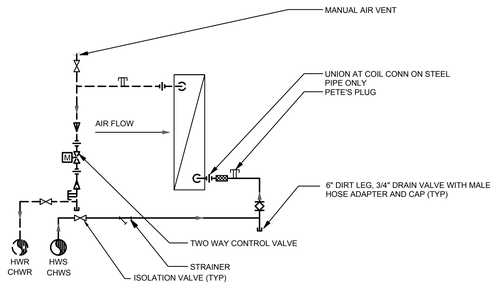

1 VAV COIL PIPING DIAGRAM

NO SCALE M-PIPING DIAGRAMS 31-06

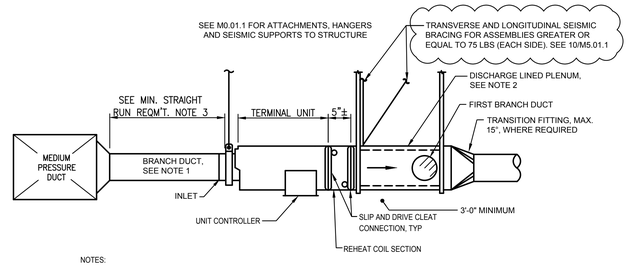

NOTES:

1. BRANCH DUCT SIZE TO MATCH UNIT INLET CONNECTION. FOR BRANCH DUCTS OVER FIVE FEET IN LENGTH, INCREASE BRANCH DUCT ONE SIZE AND PROVIDE TRANSITION IMMEDIATELY UPSTREAM OF MINIMUM STRAIGHT DUCT RUN.
2. MINIMUM 5'-0" LONG LINED PLENUM EQUAL TO TERMINAL BOX OUTLET SIZE. PROVIDE WITH MYLAR LINING FOR OSHPD PROJECTS.
3. MINIMUM STRAIGHT DUCT RUN SHALL BE EQUAL TO 4 TIMES THE INLET DIAMETER OF TERMINAL UNIT.
4. FIRST BRANCH DUCT DOWNSTREAM OF TERMINAL MUST BE A MINIMUM OF 3 FEET DOWNSTEAM OF TERMINAL UNIT.

4 TYPICAL TERMINAL UNIT DUCTING (VAV OR CAV)

NO SCALE M-Duct 1-06

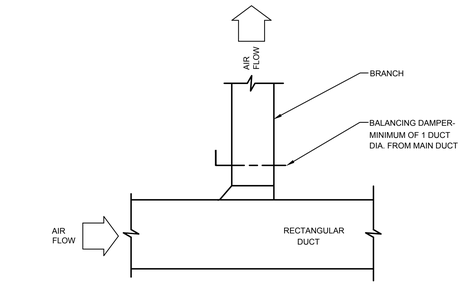

NOTE: 1. PROVIDE BALANCING DAMPER WHERE SHOWN ON THE PLANS.

7 RECTANGULAR SUPPLY BRANCH/LOW PRESSURE

NO SCALE M-DUCT 3-07

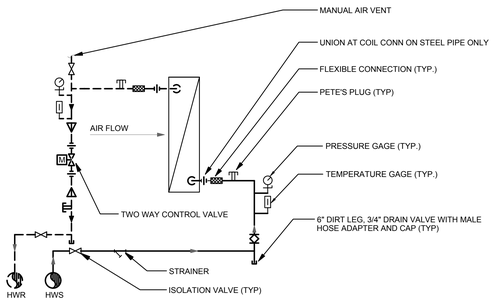

2 SINGLE COIL PIPING DIAGRAM

NO SCALE M-PIPING DIAGRAMS 31-04

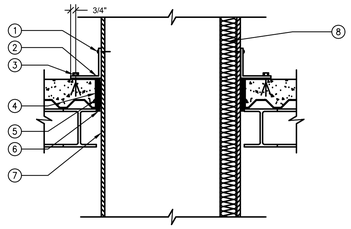

METAL FRAME FLOOR

NOTES:

1. S/M SCREWS AT 8" O.C. MAXIMUM.
2. CONTINUOS GALVANIZED STEEL ANGLE WITH WELDED CORNERS AND JOINTS, 3"x3"x1/4" THICK.
3. CONCRETE PAF-HILTIXC (ICC EDR-1752) 0.138" Ø X 1-1/4" EMBEDMENT. LOCATE @ 8" O.C. MAXIMUM.
4. MINERAL WOOL FIRE SAFING.
5. FLOOR OPENING. PROVIDE 1/2" MINIMUM CLEARANCE BETWEEN FLOOR OPENING AND DUCT.
6. FIRE-RATED SEALANT ALL AROUND.
7. RECTANGULAR GSM DUCT. ROUND AND FLAT-OVAL DUCT SIMILAR.
8. DUCT INTERNAL INSULATION WHERE OCCURS.

5 DUCT PENETRATION THROUGH FLOOR DETAIL

NO SCALE M-DUCT 6-09

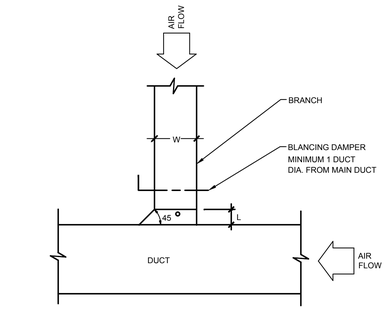

L=W/4 (4" MIN.)

8 EXHAUST RECTANGULAR BRANCH

NO SCALE M-DUCT 3-08

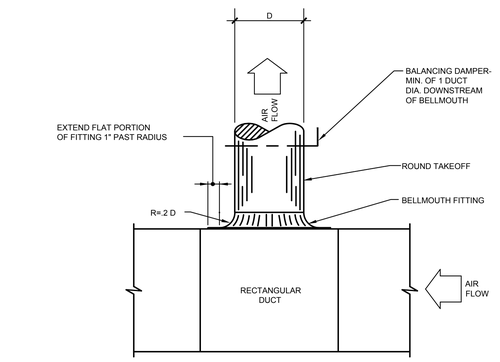

NOTE: 1. PROVIDE BALANCING DAMPER WHERE SHOWN ON THE PLANS.

9 MEDIUM PRESSURE DUCT TAP - BELLMOUTH

NO SCALE M-DUCT 3-10

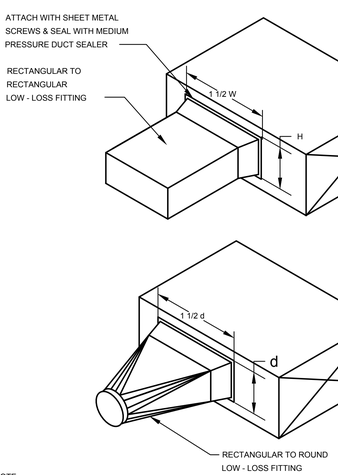

NOTE:

1. ALL BRANCH TAKE-OFFS SHALL HAVE A LOW LOSS FITTING WHETHER SHOW ON THE FLOOR PLAN OR NOT.

3 LOW-LOSS BRANCH DUCT CONNECTION

NO SCALE M-Duct 1-11

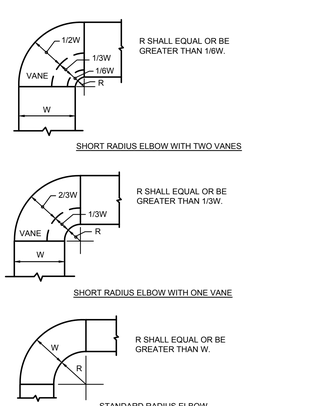

NOTES:

1. THE INTERIOR SURFACE OF ALL RADIUS ELBOWS SHALL BE MADE ROUND.
2. ALL STANDARD RADIUS ELBOWS SHOWN ON FLOOR PLANS MAY BE MADE SHORT RADIUS ELBOWS. ALL SHORT RADIUS ELBOWS SHALL HAVE VANES. VANES SHALL BE CONSTRUCTED, SUPPORTED AND FASTENED AS RECOMMENDED BY SMACNA.

DESIGNER'S NOTE:

1. DO NOT SHOW MITERED ELBOWS AND MITERED OFFSETS (TRANSITIONS) GREATER THAN 15 DEGREES ON DRAWINGS.

6 DUCTWORK RADIUS ELBOWS

NO SCALE M-DUCT 6-12

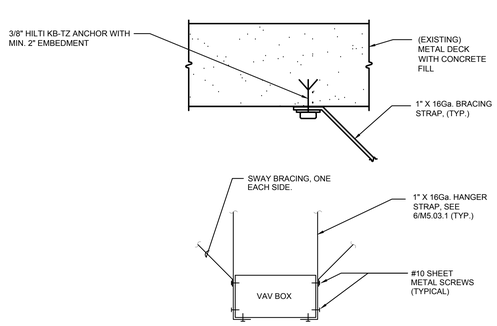

10 TERMINAL UNIT HANGER STRAP ATTACHMENT

NO SCALE

NOLL & TAM ARCHITECTS

729 Heinz Avenue
Berkeley, CA 94710
tel 510.542.2200
fax 510.542.2201

ARCHITECTS SEAL

APPROVALS

FILE NUMBER: 07-C1

DIVISION OF THE STATE ARCHITECT

APP# 01-117630

ACS_____ FLS_____ SSS_____

Date:

PROJECT 2016-0538

CONTACT ~~Thanh Bale Sharma~~

INTERFACE ENGINEERING

135 Main Street
Suite 400
San Francisco, CA 94105
TEL 415.489.7240
FAX 415.489.7289
www.interfaceengineering.com

PROJECT TITLE

CONTRA COSTA CCD
D-4002
DVC SAN RAMON CAMPUS EXPANSION

1690 Watermill Rd.
San Ramon, CA 94582

ISSUE TITLE

INCREMENT 1 - RENOVATION

ISSUE DATE 10/26/2020

NOLL & TAM JOB NUMBER 21630

REVISIONS

	DATE	DESCRIPTION

SHEET TITLE

DETAILS - MECHANICAL

SHEET NUMBER

M5.01.1

6/21/2018 11:19:21 AM C:\Users\becke.demo\Documents\Revit locals\DVCSR Expansion_Central 2018_becke.demo.rvt

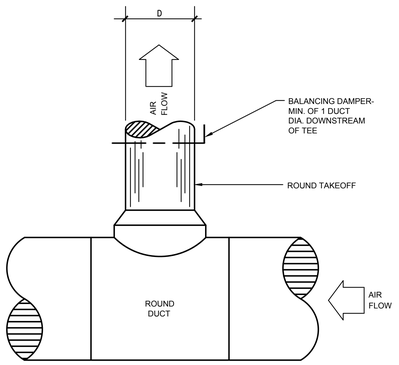

NOTE: 1. PROVIDE BALANCING DAMPER WHERE SHOWN ON THE PLANS.

1 MEDIUM PRESSURE DUCT TAP - CONICAL TEE

NO SCALE

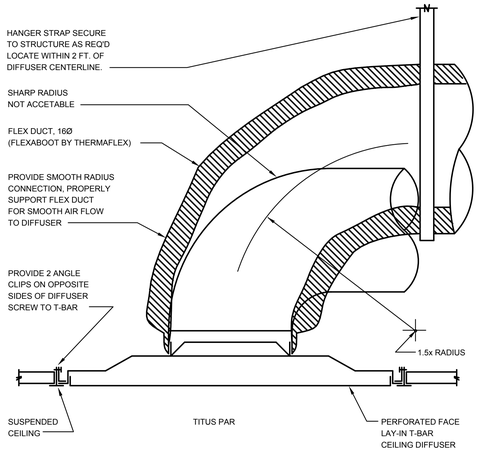

NOTE:

1. TYPICAL AT ALL RETURN AIR GRILLES WITHOUT FULL HEIGHT PARTITIONS.

4 ACOUSTIC RETURN AIR GRILLE DETAIL

NO SCALE

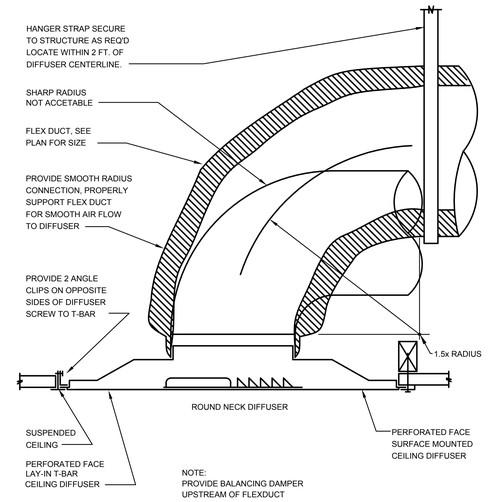

6 CEILING DIFFUSER CONNECTION

NO SCALE

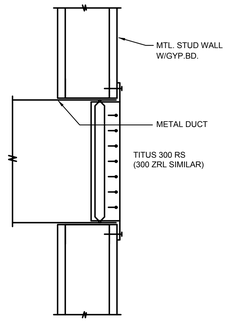

5 GRILLE ON STUD WALL

NO SCALE

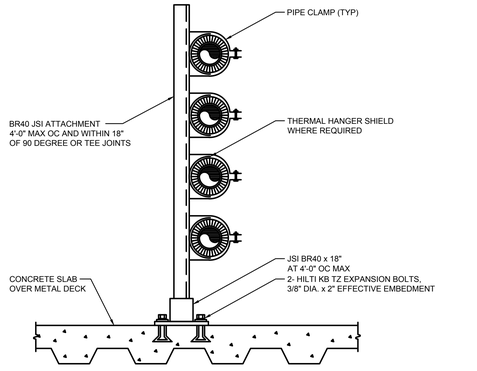

7 STACKED PIPE SUPPORT DETAIL

NO SCALE

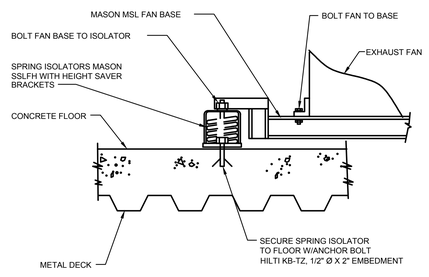

3 EXHAUST FAN MOUNTING DETAIL (EF-AP1)

NO SCALE

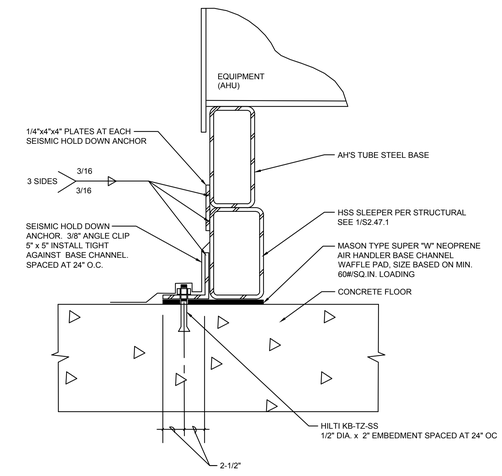

NOTE:

1. SEE ARCHITECTURAL DRAWINGS FOR FLASHING AND WATER PROOFING DETAILS.

8 AHU MOUNTING DETAIL (AHU-x)

NO SCALE

NOLL & TAM ARCHITECTS

729 Heinz Avenue
Berkeley, CA 94710
tel 510.542.2200
fax 510.542.2201

ARCHITECTS SEAL

APPROVALS

FILE NUMBER: 07-C1

DIVISION OF THE STATE ARCHITECT

APP# 01-117630

ACS_____FLS_____SSS_____

Date:

PROJECT 2016-0538
CONTACT Jared Doescher

INTERFACE ENGINEERING

135 Main Street
Suite 400
San Francisco, CA 94105
TEL 415.489.7240
FAX 415.489.7289
www.interfaceengineering.com

PROJECT TITLE

CONTRA COSTA CCD
D-4002
DVC SAN RAMON CAMPUS EXPANSION

1690 Watermill Rd.
San Ramon, CA 94582

ISSUE TITLE

INCREMENT 1 - RENOVATION

ISSUE DATE 10/26/2020

NOLL & TAM JOB NUMBER 21630

REVISIONS

	DATE	DESCRIPTION

SHEET TITLE

DETAILS - MECHANICAL

SHEET NUMBER

M5.02.1

6/21/2018 11:19:21 AM C:\Users\beckie.demo\Documents\Revit locals\DVCSR Expansion_Central 2018_beckie.demo.rvt

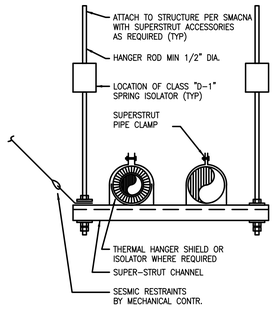

1 TRAPEZE SPRING HANGER

NO SCALE M-PIPE 1-10

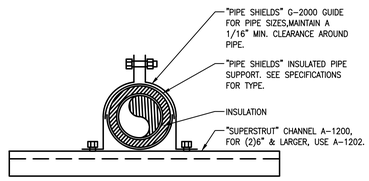

2 PIPE GUIDE - 3/4" THRU 12" DIA.

NO SCALE M-PIPE 4-10

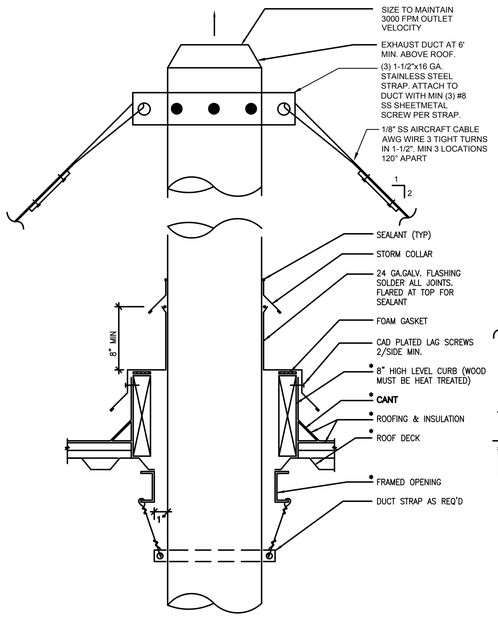

3 EXHAUST DUCT THRU ROOF

NO SCALE

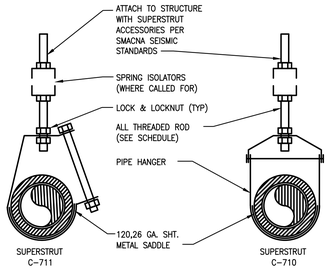

PIPE SIZE (IN)	MAX SUPPORT SPAN (FT)	MIN. ROD SIZE (IN)
UP TO 1"	7	3/8"
1-1/2"	9	3/8"
2 TO 2-1/2"	10	3/8"
3"	12	1/2"
3-1/2"	13	1/2"
4	14	5/8"
5	16	5/8"
6	17	3/4"
8	19	7/8"
10	22	7/8"
12	23	7/8"

4 SINGLE PIPE SUPPORT

NO SCALE M-PIPE 1-11

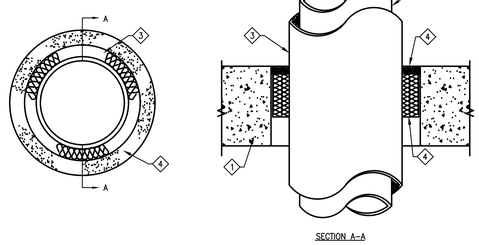

NOTES:

1. FLOOR OR WALL ASSEMBLY.
2. PIPE.
3. FIRESTOP SYSTEM PER ASTME814/UL1479.
4. PENETRATION OPENING PER ANNULAR SPACE REQUIREMENTS FOR SELECTED SYSTEM.

PIPE MATERIAL	MIN. THICKNESS	MAX. SIZE	U.L. SYSTEM No.
STEEL	SCH10	30"	CAJ5002
COPPER	TYPE L	4"	CAJ5002

5 INSULATED PIPE THRU WALL/FLOOR

NO SCALE M-PENETRATIONS 1-04

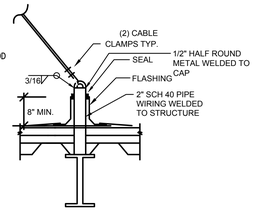

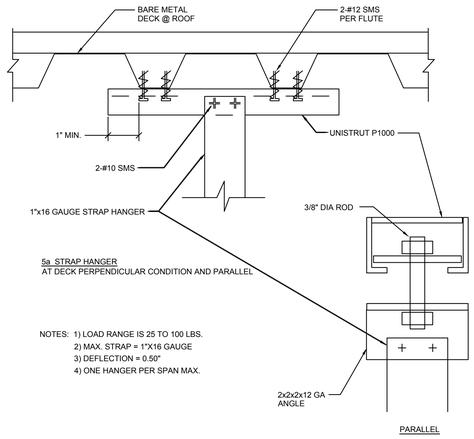

5a STRAP HANGER
AT DECK PERPENDICULAR CONDITION AND PARALLEL

NOTES: 1) LOAD RANGE IS 25 TO 100 LBS.
2) MAX. STRAP = 1"X16 GAUGE
3) DEFLECTION = 0.50"
4) ONE HANGER PER SPAN MAX.

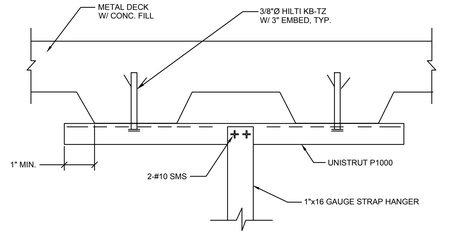

5c STRAP HANGER
AT DECK PERPENDICULAR CONDITION

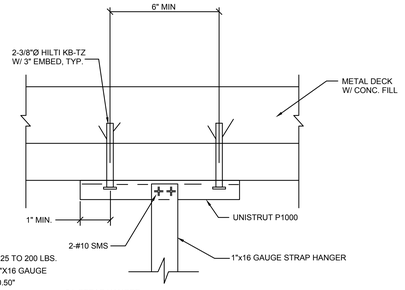

NOTES: 1) LOAD RANGE IS 25 TO 200 LBS.
2) MAX. STRAP = 1"X16 GAUGE
3) DEFLECTION = 0.50"

5d STRAP HANGER
AT DECK PARALLEL CONDITION

6 STRAP HANGER DETAIL

NO SCALE M-MOUNTING 13-03

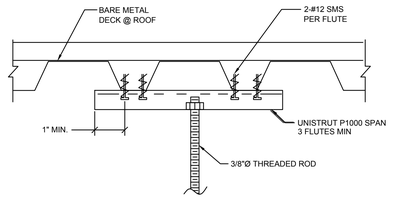

1a ROD HANGER
AT DECK PERPENDICULAR CONDITION AND PARALLEL

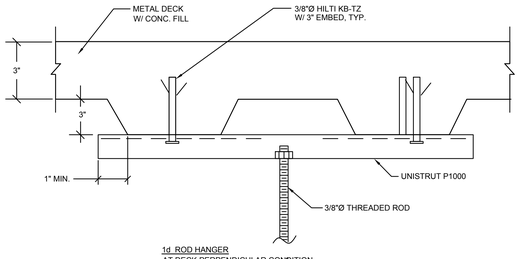

1d ROD HANGER
AT DECK PERPENDICULAR CONDITION

NOTES: 1) LOAD RANGE IS 25 TO 200 LBS.
2) MAX. ROD SIZE: 7/8"
3) DEFLECTION = 0.20"

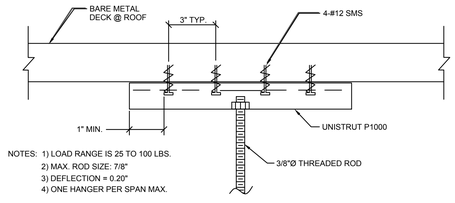

NOTES: 1) LOAD RANGE IS 25 TO 100 LBS.
2) MAX. ROD SIZE: 7/8"
3) DEFLECTION = 0.20"
4) ONE HANGER PER SPAN MAX.

1b ROD HANGER
AT DECK PARALLEL CONDITION

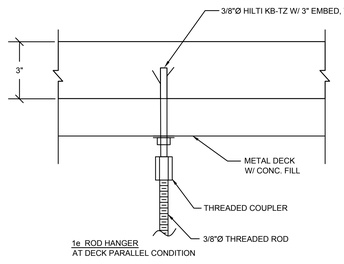

1e ROD HANGER
AT DECK PARALLEL CONDITION

7 ROD HANGER DETAIL

NO SCALE M-MOUNTING 13-02

NOLL & TAM ARCHITECTS
729 Heinz Avenue
Berkeley, CA 94710
tel 510.542.2200
fax 510.542.2201

ARCHITECTS SEAL

APPROVALS
FILE NUMBER: 07-C1
DIVISION OF THE STATE ARCHITECT
APP# 01-117630
ACS_____FLS_____SSS_____
Date:

PROJECT 2016-0538
CONTACT Jhanik Bhatt-Sharma
INTERFACE ENGINEERING
135 Main Street
Suite 400
San Francisco, CA 94105
TEL 415.489.7240
FAX 415.489.7289
www.interfaceengineering.com

PROJECT TITLE
CONTRA COSTA CCD
D-4002
DVC SAN RAMON CAMPUS EXPANSION
1690 Watermill Rd.
San Ramon, CA 94582

ISSUE TITLE
INCREMENT 1 - RENOVATION

ISSUE DATE 10/26/2020
NOLL & TAM JOB NUMBER 21630
REVISIONS
| | DATE | DESCRIPTION |

SHEET TITLE
DETAILS - MECHANICAL

SHEET NUMBER
M5.03.1

6/21/2018 11:19:21 AM C:\Users\becke.demo\Documents\Revit locals\DVCSR Expansion_Central 2018_becke.demo.rvt

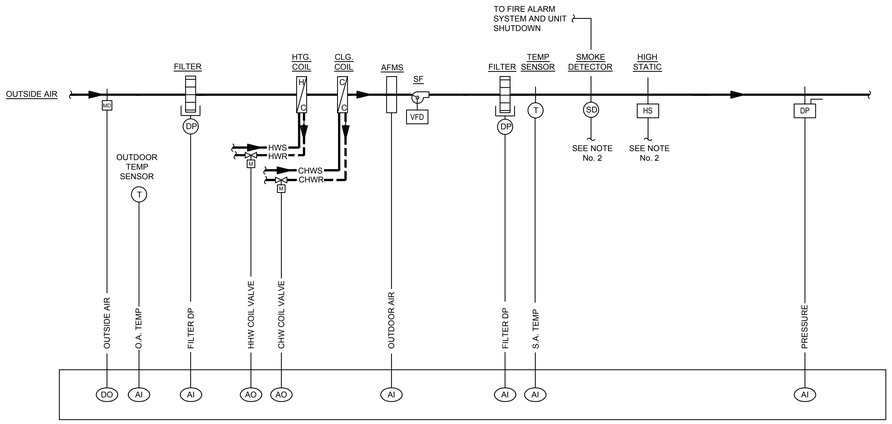

NOTES:

1. SEE SCHEDULES AND AIR HANDLING UNIT DETAILS FOR QUANTITY OF FANS, VFD'S AND ECM MOTORS.
2. HARDWIRE SMOKE DETECTOR AND HIGH STATIC ACTIVATIONS TO VFD/ECM MOTORS FOR FAN SHUTDOWN.
3. LOCATE DUCT DIFFERENTIAL PRESSURE SENSOR AT 2/3 DISTANCE DOWNSTREAM OF SUPPLY FAN.

1 VAV AIR HANDLING UNIT SYSTEM CONTROL DIAGRAM (AHU-7)

NO SCALE M-CONTROLS 16-01

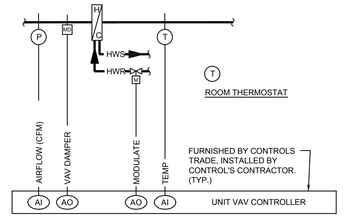

5 VAV BOX CONTROL DIAGRAM (WITH REHEAT)

NO SCALE M-CONTROLS 17D-10

CONTROL DIAGRAM SYMBOLS LIST

ABBREVIATIONS		SYMBOLS	
AFMS	AIR FLOW MEASURING STATION	AI	ANALOG INPUT
AI	ANALOG INPUT	AO	ANALOG OUTPUT
AO	ANALOG OUTPUT	CT	ELECTRIC CURRENT TRANSMITTER
BMS/BAS	BUILDING MANAGEMENT SYSTEM	DDC #-#	DIRECT DIGITAL CONTROL
CO	CARBON MONOXIDE SENSOR	DI	DIGITAL INPUT
CO2	CARBON DIOXIDE SENSOR	DO	DIGITAL OUTPUT
CT	ELECTRIC CURRENT TRANSMITTER	DP DP	DIFFERENTIAL PRESSURE SENSOR
DDC	DIRECT DIGITAL CONTROL		FLOW METER
DI	DIGITAL INPUT	FS	FLOW SWITCH
DO	DIGITAL OUTPUT	H	ROOM / DUCT RELATIVE HUMIDITY SENSOR / TRANSMITTER
DP	PRESSURE SENSOR	HS	HIGH STATIC PRESSURE SENSOR
EA	EXHAUST AIR	M/S	MOTOR STARTER
ECM	ELECTRONICALLY COMMUTATED MOTOR	MD	MOTORIZED DAMPER
EF	EXHAUST FAN	NETWORK	BACNET COMMUNICATION LINE WITH DEVICE / CONTROLLER
HS	HIGH STATIC	P	PRESSURE SENSOR
HWR	HEATING HOT WATER RETURN	SD	SMOKE DETECTOR
HWS	HEATING HOT WATER SUPPLY	SP	SPACE PRESSURE SENSOR
M	MOTORIZED	T	TEMPERATURE SENSOR/ROOM THERMOSTAT
MAU	MAKE UP AIR UNIT	TPI	THIRD PARTY INTERFACE (BACNET)
M/S	MOTOR STARTER	VFD	VARIABLE FREQUENCY DRIVE
MD	MOTORIZED DAMPER	ECM	ELECTRONICALLY COMMUTATED MOTOR
OA	OUTSIDE AIR		
P	PRESSURE SENSOR		
PPM	PARTS PER MILLION		
RA	RETURN AIR / RELIEF AIR		
RF	RETURN FAN / RELIEF FAN		
SA	SUPPLY AIR		
SF	SUPPLY FAN OR SQUARE FOOT		
SD	SMOKE DETECTOR		
T	TEMPERATURE SENSOR / ROOM THERMOSTAT		
TPI	THIRD PARTY INTERFACE		
VFD	VARIABLE FREQUENCY DRIVE		

GENERAL SHEET NOTES

A. PROVIDE ALL THIRD PARTY BACNET INTERFACES WHERE NOT PROVIDED BY EQUIPMENT MANUFACTURER.

B. SEE ELECTRICAL DRAWINGS FOR 120 VOLT JUNCTION BOXES FOR POWER SUPPLY. PROVIDE ADDITIONAL 120V POWER SUPPLY AS REQUIRED, AND PROVIDE 120V TO 24V TRANSFORMERS FOR LOW VOLTAGE CONTROL POWER. PROVIDE 24V POWER TO ALL CONTROL DEVICES. PROVIDE CONTROL WIRING PER DIV. 23 & 26 SPECIFICATIONS. PROVIDE PLENUM RATED CABLE ABOVE REMOVABLE TILE CEILING, AND RACEWAY ABOVE HARD LID CEILINGS.

C. PROVIDE 120V POWER FOR AIRFLOW MEASURING STATIONS, LARGE VALVES, AND BMS CONTROL SYSTEMS INCLUDING ALL PANELS. FOLLOW DIV. 26 SPECIFICATIONS FOR PRODUCTS AND INSTALLATION RELATED TO 120V POWER DISTRIBUTION.

D. PROVIDE COMMUNICATION WIRING AND CONNECT TO THE BUILDING AND/OR CAMPUS' IP NETWORK.

E. CONTROL DIAGRAMS, SEQUENCES, AND SPECIFICATIONS ARE PERFORMANCE BASED. PROVIDE FINAL SEQUENCES, POINT LIST, TRENDING LIST, CONTROL DIAGRAMS, AND ARCHITECTURAL RISER DIAGRAMS (SEE SPECIFICATIONS).

F. PROVIDE FLOOR LEVEL AND BUILDING LEVEL CONTROLLERS, AS NEEDED.

G. MODIFY ADJUSTABLE SETPOINTS DURING FUNCTIONAL TESTING AND COMMISSIONING STAGE FOR PROPER SYSTEMS' OPERATION.

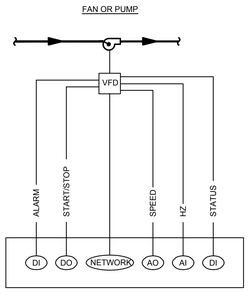

2 MOTOR WITH VFD

NO SCALE M-CONTROLS 17D-12

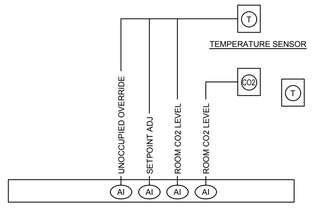

NOTE:
1. PROVIDE DIGITAL DISPLAY EXCEPT WHERE LOCATED IN LOBBIES AND CORRIDORS.
2. PROVIDE CO2 SENSORS AS SHOWN ON DRAWINGS AND IN ROOMS WITH A MIN OCCUPANCY OF 40 PERSONS PER 1,000 SF.

4 ROOM THERMOSTAT

NO SCALE M-CONTROLS 17D-11

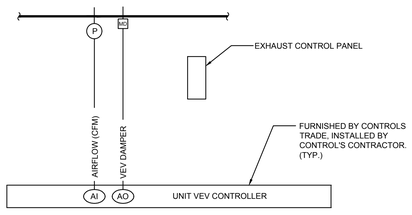

6 VEV BOX CONTROL DIAGRAM

NO SCALE

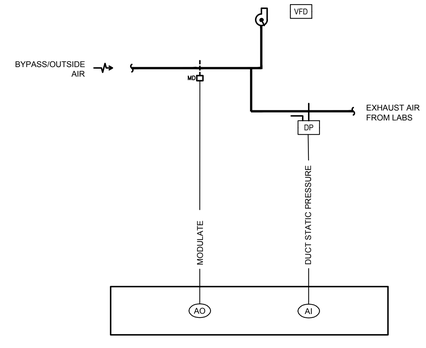

3 LABS EXHAUST FAN CONTROL DIAGRAM

NO SCALE

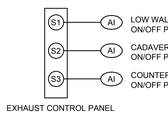

	VEV	UNOCCUPIED CFM	OCCUPIED 1 CFM	OCCUPIED 2 CFM	OCCUPIED 3 CFM	OCCUPIED 4 CFM
LOW WALL EXHAUST	2	390	990	390	390	390
COUNTER EXHAUST	3	OFF	OFF	ON 390	ON 390	OFF
CADAVER EXHAUST	1	OFF	OFF	OFF	ON 525	ON 525
BIO-CABINET	4	100	100	100	100	100
TOTAL EXHAUST		490	1090	880	1405	1015
VAV SUPPLY 1-22		390	990	780	1265	915

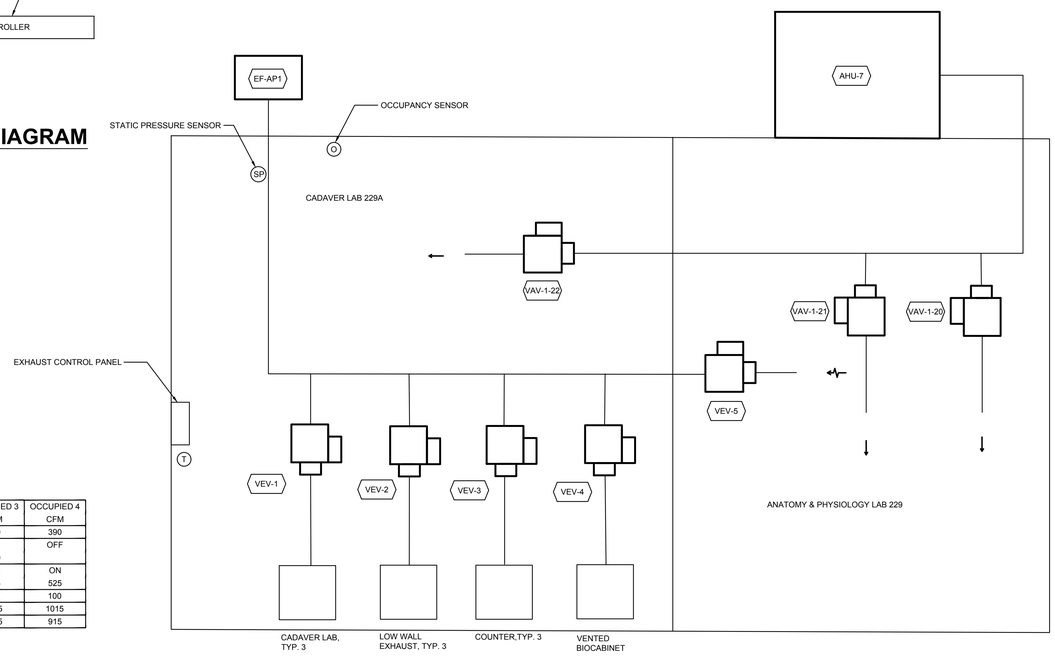

7 CADAVER ROOM AIRFLOW CONTROL DIAGRAM

NO SCALE

NOLL & TAM ARCHITECTS
729 Heinz Avenue
Berkeley, CA 94710
tel 510.542.2200
fax 510.542.2201

ARCHITECTS SEAL

APPROVALS
FILE NUMBER: 07-C1

DIVISION OF THE STATE ARCHITECT
APP# 01-117630
ACS_____FLS_____SSS_____
Date:

PROJECT 2016-0538
CONTACT Thanh Boole Sharma
INTERFACE ENGINEERING
135 Main Street
Suite 400
San Francisco, CA 94105
TEL 415.489.7240
FAX 415.489.7289
www.interfaceengineering.com

PROJECT TITLE
CONTRA COSTA CCD
D-4002
DVC SAN RAMON CAMPUS EXPANSION

1690 Watermill Rd.
San Ramon, CA 94582

ISSUE TITLE
INCREMENT 1 - RENOVATION

ISSUE DATE 10/26/2020
NOLL & TAM JOB NUMBER 21630

REVISIONS
#	DATE	DESCRIPTION

SHEET TITLE
CONTROLS - MECHANICAL

SHEET NUMBER
M6.01.1

6/21/2018 11:19:21 AM C:\Users\beckie.demo\Documents\Revit local\DVCSR Expansion_Central 2018_beckie.demo.rvt

ELECTRICAL SYMBOL LIST

NOTE: This is a standard symbol list and not all items listed may be used.

Abbreviations

(E)	EXISTING
(R)	RELOCATE
(RL)	LOCATION OF RELOCATED DEVICE
(X)	DEMOLISH
A	AMPERES, AMBER
AFC	ABOVE FINISHED CEILING
AFF	ABOVE FINISHED FLOOR
AHJ	AUTHORITY HAVING JURISDICTION
AIC	AVAILABLE INTERRUPTING CAPACITY
ANSI	AMERICAN NATIONAL STANDARDS INSTITUTE
AWG	AMERICAN WIRE GAUGE
BAS	BUILDING AUTOMATION SYSTEM
C	CONDUIT, CLOSE, CONTROL
CA	CABLE
CAT	CATEGORY
CLG	CEILING
COORD	COORDINATE
CU	COPPER
dB	DECIBEL
DIA	DIAMETER
DIM	DIMENSION
DIV	DIVISION
DN	DOWN
DTL	DETAIL
DWG	DRAWING
E	EMERGENCY
EA	EACH
EF	EXHAUST FAN
EL	ELEVATION
EM	EMERGENCY LIGHT
EMT	ELECTRICAL METALLIC TUBING
FA	FIRE ALARM
FBO	FURNISHED BY OTHERS
FMC	FLEXIBLE METAL CONDUIT
FT	FOOT, FEET
G, GND	GROUND
GFCI	GROUND FAULT CIRCUIT INTERRUPTER
GFI	GROUND FAULT INTERRUPTER
GFP	GROUND FAULT PROTECTION
HT	HEIGHT
ID	IDENTIFICATION
IEEE	INSTITUTE OF ELECTRICAL AND ELECTRONICS ENGINEERS
IG	ISOLATED GROUND
IN	INCH, INCHES
KV	KILOVOLT
KVA	KILOVOLT AMPERES
KW	KILOWATT
LED	LIGHT EMITTING DIODE
LFMC	LIQUIDTIGHT FLEXIBLE METAL CONDUIT
LV	LOW VOLTAGE
MCA	MINIMUM CIRCUIT AMPS
MCC	MOTOR CONTROL CENTER
MIN	MINIMUM
MISC	MISCELLANEOUS
MOCP	MAXIMUM OVERCURRENT PROTECTION
MT, MTD	MOUNT, MOUNTED
N	NEUTRAL
N.I.C.	NOT IN CONTRACT
N/A	NOT APPLICABLE
NEC	NATIONAL ELECTRIC CODE
NEMA	NATIONAL ELECTRICAL MANUFACTURERS ASSOCIATION
NESC	NATIONAL ELECTRIC SAFETY CODE
NTS	NOT TO SCALE
OC	ON CENTER
OFCI	OWNER FURNISHED, CONTRACTOR INSTALLED
PH	PHASE
PNL	PANEL
PVC	POLY-VINYL-CHLORIDE
PWR	POWER
QTY	QUANTITY
REQD	REQUIRED
RFI	REQUEST FOR INFORMATION
RM	ROOM
RMC	RIGID METAL CONDUIT
SHT	SHEET
SPD	SURGE PROTECTION DEVICE
STD	STANDARD
SWBD	SWITCHBOARD
TBD	TO BE DETERMINED
TVSS	TRANSIENT VOLTAGE SURGE SUPPRESSOR
TYP	TYPICAL
UL	UNDERWRITERS LABORATORIES
UON	UNLESS OTHERWISE NOTED
UPS	UNINTERRUPTIBLE POWER SUPPLY
V	VOLTS, VOLTAGE
W/	WITH
W/O	WITHOUT
WP	WEATHERPROOF
XFMR	TRANSFORMER

Connections / Equipment

- AUTOMATIC DOOR OPERATOR
- CEILING MOUNTED JUNCTION BOX / FLOOR MOUNTED JUNCTION BOX
- COMBINATION ADJUSTABLE FREQUENCY DRIVE WITH SAFETY DISCONNECT SWITCH
- COMBINATION MOTOR STARTER/FUSED DISCONNECT SWITCH
- HEAVY DUTY FUSED DISCONNECT SWITCH
- MOTOR CONNECTION
- NON-FUSED DISCONNECT SWITCH
- TRANSFORMER
- FIRE SMOKE DAMPER
- SMOKE DAMPER
- WALL-MOUNTED JUNCTION BOX

General

- DETAIL NUMBER AND SHEET LOCATION
- EQUIPMENT IDENTIFICATION
- FOOD SERVICE EQUIPMENT / CALCULATION TAG
- KEYED NOTE
- DEMOLISH
- EXISTING WORK
- NEW WORK

Lighting

- EXIT SIGN CEILING MOUNTED, ARROW(S) INDICATES DIRECTION IF SHOWN
- EXIT SIGN WALL MOUNTED, ARROW(S) INDICATES DIRECTION IF SHOWN
- RECESSED 2' X 2' LUMINAIRE
- RECESSED 2' X 2' LUMINAIRE CONNECTED TO EMERGENCY/LIFE SAFETY CIRCUIT OR WITH INTEGRAL EMERGENCY BATTERY CONNECTED TO UNSWITCHED CIRCUIT
- RECESSED 2' X 4' LUMINAIRE
- RECESSED 2' X 4' LUMINAIRE CONNECTED TO EMERGENCY/LIFE SAFETY CIRCUIT OR WITH INTEGRAL EMERGENCY BATTERY CONNECTED TO UNSWITCHED CIRCUIT
- RECESSED LUMINAIRE CONNECTED TO EMERGENCY/LIFE SAFETY CIRCUIT
- SURFACE MOUNTED 2' X 2' LUMINAIRE CONNECTED TO EMERGENCY/LIFE SAFETY CIRCUIT OR WITH INTEGRAL EMERGENCY BATTERY CONNECTED TO UNSWITCHED CIRCUIT
- SURFACE MOUNTED 2' X 4' LUMINAIRE
- SURFACE MOUNTED 2' X 4' LUMINAIRE CONNECTED TO EMERGENCY/LIFE SAFETY CIRCUIT OR WITH INTEGRAL EMERGENCY BATTERY CONNECTED TO UNSWITCHED CIRCUIT
- SURFACE OR PENDANT MOUNTED 6" X 8' LUMINAIRE
- SURFACE OR PENDANT MOUNTED LUMINAIRE
- SURFACE OR PENDANT MOUNTED LUMINAIRE CONNECTED TO EMERGENCY/LIFE SAFETY CIRCUIT OR WITH INTEGRAL EMERGENCY BATTERY CONNECTED TO UNSWITCHED CIRCUIT
- SURFACE OR PENDANT MOUNTED STRIPLIGHT
- TRACKLIGHT WITH LUMINAIRE(S)
- WALL MOUNTED 6" WIDE LUMINAIRE
- WALL MOUNTED LUMINAIRE
- WALL MOUNTED LUMINAIRE CONNECTED TO EMERGENCY/LIFE SAFETY CIRCUIT OR WITH INTEGRAL EMERGENCY BATTERY CONNECTED TO UNSWITCHED CIRCUIT
- AREA LUMINAIRE POLE TOP MOUNTED WITH POLE AND CONCRETE BASE.

Miscellaneous

- #10 THWN-2 B-27,29,31. — BRANCH CIRCUIT WIRING. ARROW INDICATES HOME RUN TO PANEL WITH CIRCUITS AS NOTED. WIRE SIZE IS #12 AWG MINIMUM UNLESS NOTED OTHERWISE. SHORT TICK MARKS INDICATE PHASE CONDUCTORS. LONG TICK MARKS INDICATE NEUTRAL CONDUCTORS. A SINGLE CURVED TICK MARK INDICATES INSULATED GREEN GROUND CONDUCTOR. SECOND CURVED TICK MARK INDICATES "ISOLATED GROUND" (GREEN INSULATION WITH YELLOW STRIPE) CONDUCTOR.
- BRANCH PANEL
- CIRCUIT BREAKER
- FLUSH WALL MOUNTED BRANCH PANEL
- MAIN DISTRIBUTION PANEL / SUB DISTRIBUTION PANEL

Raceways

- PULL BOX
- CONDUIT CONCEALED IN WALL OR CEILING SPACE
- CONDUIT ROUTED BELOW FLOOR / GRADE
- CONDUIT ELLED DOWN
- CONDUIT ELLED UP
- CONDUIT/WIRING CONTINUATION
- CONDUIT/WIRING STUBBED OUT WITH END CAP OR INSULATED PLASTIC BUSHING
- FLEXIBLE CONDUIT

Switches and Receptacles

- COMBINATION DOUBLE DUPLEX RECEPTACLE AND COMMUNICATIONS OUTLET, FLUSH FLOOR. REFER TO TELECOM DRAWINGS FOR CONDUIT SIZE REQUIREMENTS. COORDINATE WITH DIVISION 27.
- DUPLEX RECEPTACLE (MULTIPLE LETTERS INDICATE MULTIPLE OPTIONS)
  A = ABOVE COUNTER
  B = CLOCK HANGER
  C = FLUSH CEILING MOUNTED
  E = EMERGENCY
  F = ARC FAULT PROTECTED BY BREAKER IN PANEL
  G = GROUND FAULT CIRCUIT INTERRUPTER
  H = HOSPITAL GRADE
  K = CHILD RESISTANT COVER
  L = ISOLATED GROUND
  P = PENDANT MOUNTED WITH CORD GRIPS. VERIFY PENDANT LENGTH
  R1 = HALF SWITCHED BY OCCUPANCY SENSOR RELAY
  R2 = FULLY SWITCHED BY OCCUPANCY SENSOR RELAY
  S = SPLIT WIRED
  T = TAMPER RESISTANT SHUTTERED RECEPTACLE
  U = USB PORT(S)
  W = WEATHERPROOF CONTINUOUS USE COVER, GFCI PROTECTED, WITH WEATHER-RESISTANT RECEPTACLE
- DUPLEX RECEPTACLE, FLUSH FLOOR
- DOUBLE DUPLEX RECEPTACLE, FLUSH FLOOR
- DOUBLE DUPLEX RECEPTACLE. SEE LETTER CODE LIST AT DUPLEX RECEPTACLE FOR OPTIONS
- SPECIAL PURPOSE RECEPTACLE. LETTER CODE DENOTES RECEPTACLE CONFIGURATION
  LX-XXR = NEMA CONFIGURATION TWIST-LOCK RECEPTACLE
  X-XXR = NEMA CONFIGURATION STRAIGHT BLADE RECEPTACLE
  P = PENDANT MOUNT WITH CORD GRIPS. VERIFY PENDANT LENGTH
  X = COORDINATE RECEPTACLE CONFIGURATION WITH EQUIPMENT BEING SUPPLIED
- CEILING MOUNTED OCCUPANCY SENSOR
  P = PASSIVE INFRARED
  D = DUAL TECHNOLOGY
  U = ULTRASONIC, 360 DEG RANGE
  H = ULTRASONIC, HALLWAY PATTERN
  v (LOWERCASE) = VACANCY CONTROL DESIGNATION
- WALL MOUNTED OCCUPANCY SENSOR
  P = PASSIVE INFRARED
  D = DUAL TECHNOLOGY
  v (LOWERCASE) = VACANCY CONTROL DESIGNATION
- WALL MOUNTED OCCUPANCY SENSORSWITCH
  S = PASSIVE INFRARED WITH INTEGRAL "OFF" SWITCH
  T = DUAL RELAY PASSIVE INFRARED WITH TWO INTEGRAL "OFF" SWITCHES
  D = PASSIVE INFRARED WITH INTEGRAL DIMMER TO OFF.
  v (LOWERCASE) = VACANCY CONTROL DESIGNATION
- PHOTO ELECTRIC SWITCH
  D = CONTINUOUS DIMMING PHOTOCELL
  S = SWITCHED PHOTOCELL
- SINGLE POLE SWITCH
  2 = DOUBLE POLE SWITCH
  3 = THREE-WAY SWITCH
  4 = FOUR-WAY SWITCH
  a THRU z (LOWERCASE) = LUMINAIRE CONTROL DESIGNATION
  D = DIMMER
  F = FAN SPEED CONTROL
  K = KEY OPERATED SWITCH
  L = LIGHTED HANDLE
  M = MANUAL MOTOR STARTER WITH THERMAL OVERLOAD
  P = SWITCH WITH PILOT LIGHT
  S = SENTRY SWITCH
  T = INTERVAL TIMER
  W = WEATHERPROOF SWITCH
  V = LOW VOLTAGE SWITCH

GENERAL ELECTRICAL NOTES

A. DO NOT COMMENCE INSTALLATION OF ELECTRICAL SYSTEMS AND EQUIPMENT WITHOUT RELATED SHOP DRAWING APPROVALS.

B. ELECTRICAL CIRCUITS SHALL BE INTERRUPTED ONLY WITH PRIOR WRITTEN CONSENT. SUCH INTERRUPTIONS SHALL BE PRECEDED BY ALL POSSIBLE PREPARATIONS BY THE CONTRACTOR WHICH ARE NECESSARY TO KEEP THE ELECTRICAL CIRCUITS OFF FOR A MINIMUM PERIOD IN AN EXPEDITIOUS MANNER PURSUANT WITH GOOD WORKMANSHIP. THIS INCLUDES CIRCUIT TRACING TO IDENTIFY THE ELECTRICAL LOAD BEING SERVED AND THE ORIGIN OF THE CIRCUIT.

C. COORDINATE WITH OWNER SO THAT WORK CAN BE SCHEDULED NOT TO INTERRUPT OPERATIONS, NORMAL ACTIVITIES, BUILDING ACCESS, ACCESS TO DIFFERENT AREAS. THE OWNER WILL COOPERATE TO THE BEST OF THEIR ABILITY TO ASSIST IN A COORDINATED SCHEDULE, BUT WILL REMAIN THE FINAL AUTHORITY AS TO TIME OF WORK PERMITTED.

D. COORDINATE THE EXACT LOCATION OF EXISTING UTILITIES AND EQUIPMENT PRIOR TO COMMENCEMENT OF WORK. CONTRACTOR SHALL BE THE OWNER FOR DAMAGES CAUSED BY THE FAILURE TO LOCATE AND PRESERVE UTILITIES. REPLACE DAMAGED ITEMS WITH NEW MATERIAL TO MATCH EXISTING.

E. INSTALLATION OF UTILITY TRANSFORMER, UTILITY SERVICE CONDUITS, VAULTS, GROUNDING, ETC., SHALL BE VERIFIED AND COORDINATED WITH UTILITY COMPANY PRIOR TO INSTALLATION. ALL WORK SHALL CONFORM WITH ALL UTILITY COMPANY RULES, REGULATIONS, AND STANDARDS. THE PROPOSED UTILITY COMPANY TRANSFORMER LOCATION, SERVICE FEEDER ROUTING, VAULT LOCATION AND SIZE ARE SUBJECT TO UTILITY COMPANY ENGINEERING, REVIEW AND APPROVAL. AT THE TIME OF THE ISSUANCE OF THESE DOCUMENTS, THIS ENGINEERING HAS NOT BEEN COMPLETED. CONTRACTOR SHALL COORDINATE AND VERIFY ALL THE NECESSARY UTILITY REQUIREMENTS FOR THIS PROJECT WITH UTILITY COMPANY PRIOR TO COMMENCING WORK.

F. ALL WORK ON SERVICE CONDUCTORS, FEEDERS, AND OTHER SUCH EQUIPMENT SHALL BE DONE ONLY WHEN SUCH CONDUCTORS, FEEDERS, AND EQUIPMENT ARE DE-ENERGIZED. THE CONTRACTOR SHALL HAVE AN "ELECTRICAL SAFETY AND LOCK-OUT/TAG-OUT PROCEDURE" IN PLACE PRIOR TO COMMENCEMENT OF WORK.

G. REMOVE AND RESTORE WIRING WHICH SERVES USABLE EXISTING OUTLETS CLEAR OF THE CONSTRUCTION OR DEMOLITION.

H. IF EXISTING JUNCTION BOXES WILL BE MADE INACCESSIBLE, OR IF ABANDONED OUTLETS SERVE AS FEED THROUGH BOXES FOR OTHER EXISTING ELECTRICAL EQUIPMENT WHICH IS BEING RETAINED, PROVIDE NEW CONDUIT AND WIRE TO BYPASS THE ABANDONED OUTLETS.

I. IF EXISTING CONDUITS PASS THROUGH PARTITIONS OR CEILING WHICH ARE BEING REMOVED OR REMODELED, PROVIDE NEW CONDUIT AND WIRE TO REROUTE CLEAR OF THE CONSTRUCTION OR DEMOLITION AND MAINTAIN SERVICE TO THE EXISTING LOAD.

J. CONCEALED CONDUIT LOCATED IN CONCRETE WALLS OR HARDBOARD CEILING SPACES MAY BE ABANDONED IN PLACE. REMOVE CONDUCTORS AND TAG ABANDONED CONDUITS WITH CORRESPONDING SYSTEM AND TERMINATION POINT. CUT AND CAP ABANDONED CONDUIT. DO NOT EXTEND STUBS ABOVE FINISHED FLOOR.

K. PROVIDE TEMPORARY SUPPORT FOR ELECTRICAL SYSTEMS THAT REMAIN IN PLACE.

L. REMOVE ABANDONED WIRING TO LEAVE SITE CLEAN.

M. PROVIDE BLANK COVER PLATE FOR ABANDONED FLUSH OUTLETS.

MAINTAIN ACCESS TO EXISTING ELECTRICAL INSTALLATIONS WHICH REMAIN ACTIVE. MODIFY INSTALLATION OR PROVIDE ACCESS PANEL AS APPROPRIATE.

N. WHERE DRAWINGS INDICATE EXISTING ELECTRICAL EQUIPMENT OR DEVICES TO BE RELOCATED AND/OR REUSED, REFURBISH THEM. THOROUGHLY CLEAN SUCH ITEMS. NOTIFY ARCHITECT OF ANY DEFECTS IN SUCH INSTALLATIONS. REPAIR ANY DAMAGE CAUSED BY DEMOLITION OR CONSTRUCTION PERFORMED UNDER THIS CONTRACT.

O. PROVIDE UPDATED PANEL SCHEDULES AND DIRECTORIES THAT IDENTIFY EXISTING CIRCUITS AND NUMBER OF SPARE CIRCUITS AVAILABLE UPON COMPLETION OF DEMOLITION WORK.

P. PROVIDE SUITABLE ANCHORAGE AND SUPPORT FOR ELECTRICAL EQUIPMENT IN RATED WALLS, SLABS AND CEILINGS. MOUNT DEVICES AND RACEWAYS IN ACCORDANCE WITH ESTABLISHED CODES AND SPECIFICATIONS.

Q. CONNECT EQUIPMENT AND DEVICES FURNISHED UNDER OTHER DIVISIONS OF THIS CONTRACT, BY OWNER OR BY OTHER CONTRACTS.

R. UNLESS OTHERWISE NOTED, PROVIDE CONCEALED AND FLUSH MOUNTED INSTALLATION OF DEVICES AND EQUIPMENT IN AREAS.

S. PROVIDE SEPARATE EQUIPMENT GROUNDING CONDUCTOR IN 120 VOLT, MULTI-WIRE CIRCUITS.

T. FOR 120 VOLT, 20 AMP CIRCUITS, WHERE CIRCUIT DISTANCE FROM PANELBOARD TO FARTHEST DEVICE/FIXTURE EXCEEDS 75 FEET, PROVIDE #10 SIZE CONDUCTOR.

U. RUN ELECTRICAL CONDUIT CONCEALED AND PARALLEL TO BUILDING LINES. VERIFY WITH ARCHITECT.

V. RECEPTACLE OUTLETS SHALL COMPLY WITH CEC SECTION 210.7.

W. LIGHTS, SWITCHES AND CONTROL MECHANISMS SHALL COMPLY WITH CEC SECTION 404.

X. REFER TO COMMUNICATION DRAWINGS FOR ADDITIONAL ELECTRICAL SCOPE OF WORK.

Y. BRACE ELECTRICAL EQUIPMENT TO RESIST A HORIZONTAL FORCE THAT ACT IN ANY DIRECTION. COMPLY WITH TITLE 24 REQUIREMENTS.

Z. INSTALL COMPLETE SYSTEM OF CONDUCTORS IN RACEWAY SYSTEM THROUGHOUT BUILDING FOR FEEDERS, BRANCH CIRCUITS, ETC.

AA. DESIGN OF TEMPORARY POWER FOR CONSTRUCTION SHALL BE THE CONTRACTOR'S RESPONSIBILITY OR UNDER GENERAL CONTRACTOR SCOPE. REMOVE TEMPORARY POWER PRIOR TO COMPLETION OF PROJECT.

BB. ELECTRICAL CONTRACTOR SHALL COORDINATE ALL CONDUIT TRENCHING WITH OTHER DISCIPLINES AND THE UTILITY COMPANY TO AVOID CONFLICT.

CC. MINIMUM SIZE FOR EXTERIOR BELOW GRADE CONDUIT SHALL BE 1".

DD. PROVIDE A TRANSPARENT, INSULATED, INNER DOOR AS A SAFETY BARRIER IN FRONT OF THE TERMINATION SECTION FOR ALL MEDIUM VOLTAGE SWITCHBOARDS AS REQUIRED BY PG&E. DOOR CONSTRUCTION SHALL COMPRISE OF A SOLID PIECE OF CLEAR ACRYLIC THAT IS 1/4" THICK AND RESISTANT TO DAMAGE BY IMPACT OR PUNCTURE. ENSURE THE ACRYLIC IS RATED FOR THE VOLTAGE SERVED. SAFETY DOOR SHALL EXTEND A MINIMUM OF 10" BELOW THE TERMINATING BUS AND MUST COVER ALL ENERGIZED PARTS ON THE SWITCHBOARD. THE ACRYLIC DOOR MUST BE OPERABLE WITH HINGES ON ONE SIDE, AND A HANDLE AND PROVISIONS TO SECURE THE DOOR IN THE OPEN AND CLOSED POSITIONS ON THE OPPOSITE SIDE.

EE. DRY-TYPE TRANSFORMERS LARGER THAN 112.5KVA ARE SPECIFIED IN COMPLIANCE WITH CEC 450.21(B) EXCEPTIONS 1 AND 2. THE 1-HOUR FIRE RATING REQUIREMENT FOR THE ROOM HOUSING THE TRANSFORMER SHALL BE EXEMPT.

FF. REMOVE EXISTING LUMINAIRES, SWITCHES, RECEPTACLES, AND OTHER ELECTRICAL EQUIPMENT AND DEVICES AND ASSOCIATED WIRING FROM WALLS, CEILINGS, FLOORS, AND OTHER SURFACES SCHEDULED FOR REMODELING, RELOCATION, OR DEMOLITION UNLESS SHOWN AS RETAINED OR RELOCATED ON DRAWINGS.

GG. MAINTAIN ELECTRICAL CONTINUITY OF EXISTING SYSTEMS. REMOVE OR RELOCATE ELECTRICAL BOXES, CONDUIT, WIRING, EQUIPMENT, LUMINAIRES, AND THE LIKE, AS REQUIRED IN REMOVED OR REMODELED AREAS IN THE EXISTING CONSTRUCTION AFFECTED BY THIS WORK.

HH. VERIFY EXACT LOCATION AND NUMBER OF EXISTING ELECTRICAL OUTLETS AND LUMINAIRES IN THE FIELD. LOCATIONS OF ITEMS SHOWN ON DRAWINGS AS EXISTING ARE PARTIALLY BASED ON RECORD AND OTHER DRAWINGS WHICH MAY CONTAIN ERRORS. VERIFY THE ACCURACY OF HE INFORMATION SHOWN PRIOR TO BIDDING AND PROVIDE SUCH LABOR AND MATERIAL AS IS NECESSARY TO ACCOMPLISH THE INTENT OF THE CONTRACT DOCUMENTS.

II. OFFER REMOVED LUMINAIRES, WIRING DEVICES, PANELBOARDS AND EQUIPMENT TO THE OWNER. IF OWNER CHOOSES TO RETAIN THESE ITEMS, RETURN SUCH ITEMS TO OWNER. CAREFULLY REMOVE AND DISPOSE OF ITEMS REJECTED BY OWNER FROM PROJECT SITE AND IN A LEGAL MANNER.

JJ. EXISTING LIGHTING WHICH IS TO REMAIN OR BE RELOCATED IS TO BE CLEANED. LEAVE ALL LUMINAIRES IN PROPER WORKING ORDER. REPLACE DAMAGED OR BROKEN LENS AND/OR COMPONENTS.

KK. RECONNECT EXISTING LUMINAIRES NOT SHOWN ON DRAWINGS AND AFFECTED DUE TO DEMOLITION TO NEAREST AVAILABLE EXISTING LIGHTING CIRCUIT ABLE TO TAKE THE ADDITIONAL LOAD.

LL. PROVIDE UNSWITCHED HOT CONDUCTOR TO EMERGENCY DRIVER OF SWITCHED LUMINAIRES TO PREVENT SWITCHOVER TO BATTERY OPERATION WHEN LUMINAIRES ARE SWITCHED TO THE OFF POSITION.

MM. OCCUPANCY SENSOR NOTES:
- a. WALL SENSORS
  - SENSOR MUST HAVE CLEAR "VIEW" OF OCCUPANTS. WHERE SENSOR WILL BE BLOCKED, SUBSTITUTE WITH SMALL-ROOM CEILING SENSOR.
- b. SEE MANUFACTURER'S SPECIFICATION REGARDING PLACING SENSORS AWAY FROM STRONG AIR-FLOW. INDICATE PRECISE LOCATION OF EACH CEILING SENSOR WHERE DRAWINGS INDICATE AIR SUPPLIES.
- c. IN INDIVIDUAL ROOMS WITH CEILING SENSORS AND DUAL-LEVEL LIGHTING, ASSUME TWO TOGGLE SWITCH OVERRIDES PER ROOM.
- d. PRIOR TO INSTALLATION, RECEIVE FACTORY-TRAINING AND LAYOUT-ASSISTANCE. IF LOCAL AGENT CHANGES LIGHTING DRAWINGS, CONTACT FACTORY REPRESENTATIVE.

NN. PROVIDE ALL BACKBOXES, FLOOR BOXES, FLOOR TRENCH DUCT, GROUNDING SYSTEM, PULL BOXES, CONDUITS, CABLING, AND CABLE TRAYS ER TELECOM/SECURITY DRAWINGS AND SPECIFICATIONS. REFER TO TELECOM/AV/SECURITY DRAWINGS FOR QUANTITY AND LOCATIONS. PROVIDE ALL APPURTENANCES FOR A COMPLETE INSTALLATION.

OO. REFER TO SPECIFICATIONS FOR ADDITIONAL REQUIREMENTS.

PP. DRAWINGS AND SPECIFICATIONS COMPLIMENT EACH OTHER. REQUIREMENT BY EITHER INFERS REQUIREMENT BY BOTH.

QQ. SUPPORT CONDUITS USING OSHPD PRE-APPROVED SYSTEM MASON INDUSTRIES SEISMIC RESTRAINTS (OPM-0043-12). IT IS THE CONTRACTOR'S RESPONSIBILITY TO OBTAIN COPIES OF OSHPD PRE-APPROVALS FROM THE OWNERS OF THE PRE-APPROVALS, AND FURNISH TO THE INSPECTOR OF RECORD WITH ONE COPY OF EACH.

DSA COMPONENT ANCHORAGE NOTES

A. ALL MECHANICAL, PLUMBING, AND ELECTRICAL COMPONENTS SHALL BE ANCHORED AND INSTALLED PER THE DETAILS ON THE DSA APPROVED CONSTRUCTION DOCUMENTS. WHERE NO DETAIL IS INDICATED, THE FOLLOWING COMPONENTS SHALL BE ANCHORED OR BRACED TO MEET THE FORCE AND DISPLACEMENT REQUIREMENTS PRESCRIBED IN THE 2016 CBC, SECTIONS 1616A.1.18 THROUGH 1616A.1.26, AND ASCE 7-10 CHAPTER 13, 26, AND 30.

1. ALL PERMANENT EQUIPMENT AND COMPONENTS.
2. TEMPORARY OR MOVEABLE EQUIPMENT THAT IS PERMANENTLY ATTACHED (E.G. HARD WIRED) TO THE BUILDING UTILITY SERVICES SUCH AS ELECTRICITY, GAS OR WATER.
3. MOVEABLE EQUIPMENT WHICH IS STATIONED IN ONE PLACE FOR MORE THAN 8 HOURS AND HEAVIER THAN 400 POUNDS ARE REQUIRED TO BE ANCHORED WITH TEMPORARY ATTACHMENTS.

B. THE FOLLOWING MECHANICAL AND ELECTRICAL COMPONENTS SHALL BE POSITIVELY ATTACHED TO THE STRUCTURE, BUT THE ATTACHMENT NEED NOT BE DETAILED ON THE PLANS. THESE COMPONENTS SHALL HAVE FLEXIBLE CONNECTIONS PROVIDED BETWEEN THE COMPONENTS AND ASSOCIATED DUCTWORK, PIPING, AND CONDUIT.

1. COMPONENTS WEIGHING LESS THAN 400 POUNDS AND HAVE A CENTER OF MASS LOCATED 4 FEET OR LESS ABOVE THE ADJACENT FLOOR OR ROOF LEVEL THAT DIRECTLY SUPPORT THE COMPONENT.
2. COMPONENTS WEIGHING LESS THAN 20 POUNDS, OR IN THE CASE OF DISTRIBUTED SYSTEMS, LESS THAN 5 POUNDS PER FOOT, WHICH ARE SUSPENDED FROM A ROOF OR FLOOR OR HUNG FROM A WALL.

C. FOR THOSE ELEMENTS THAT DO NOT REQUIRE DETAILS ON THE APPROVED DRAWINGS, THE INSTALLATION SHALL BE SUBJECT TO THE APPROVAL OF THE STRUCTURAL ENGINEER OF RECORD AND THE DSA DISTRICT STRUCURAL ENGINEER. THE PROJECT INSPECTOR WILL VERIFY THAT ALL COMPONENTS AND EQUIPMENT HAVE BEEN ANCHORED IN ACCORDANCE WITH ABOVE REQUIREMENTS.

PIPING, DUCTWORK, AND ELECTRICAL DISTRIBUTION SYSTEM BRACING NOTE

A. PIPING, DUCTWORK, AND ELECTRICAL DISTRIBUTION SYSTEMS SHALL BE BRACED TO COMPLY WITH THE FORCES AND DISPLACEMENTS PRESCRIBED IN ASCE 7-10 SECTION 13.3 AS DEFINED IN ASCE 7-10 SECTION 13.6.8, 13.6.7, 13.6.5.6, AND 2016 CBC, SECTIONS 1616A.1.23, 1616A.1.25 AND 1616A.1.26.

B. THE BRACING AND ATTACHMENTS TO THE STRUCTURE SHALL BE DETAILED ON THE APPROVED DRAWINGS OR THEY SHALL COMPLY WITH ONE OF THE OSHPD PRE-APPROVALS (OPM#).

C. COPIES OF THE MANUAL SHALL BE AVAILABLE ON THE JOBSITE PRIOR TO THE START OF HANGING AND BRACING OF THE PIPE, DUCTWORK, AND ELECTRICAL DISTRIBUTION SYSTEMS.

SHEET INDEX

E0.01.1	SYMBOLS LIST AND GENERAL NOTES - ELECTRICAL
E0.02.1	LUMINAIRE SCHEDULE - ELECTRICAL
E0.03.1	TITLE 24 - INCREMENT 1
E0.04.1	TITLE 24 - INCREMENT 1
E0.05.1	TITLE 24 - INCREMENT 1
E0.06.1	TITLE 24 - INCREMENT 1
E2.30A.1	1ST FLOOR OVERALL PLAN - ELECTRICAL
E2.30B.1	2ND FLOOR OVERALL PLAN - ELECTRICAL
E2.32.1	DEMO & NEW - 1ST FLOOR - EAST - CLASSROOM - PAINTING STUDIO - POWER
E2.33.1	DEMO & NEW - 1ST FLOOR - EAST - CLASSROOM - DRAWING STUDIO - POWER
E2.34.1	DEMO & NEW - 1ST FLOOR - EAST - BOOKSTORE - POWER
E2.35.1	DEMO & NEW - 1ST FLOOR - WEST - ASSESSMENT LAB - POWER
E2.36.1	DEMO & NEW - 2ND FLOOR - WEST - TEMP TUTORIAL & STUDY - POWER
E2.37.1	DEMO & NEW - 2ND FLOOR - EAST - A&P LAB - POWER
E2.38.1	DEMO & NEW - ATTIC FLOOR PLAN WEST - POWER
E2.51.1	ATTIC FLOOR PLAN - POWER
E2.42.1	DEMO & NEW - 1ST FLOOR - EAST - CLASSROOM - PAINTING STUDIO - LIGHTING
E2.43.1	DEMO & NEW - 1ST FLOOR - EAST - CLASSROOM - DRAWING STUDIO - LIGHTING
E2.44.1	DEMO & NEW - 1ST FLOOR - EAST - BOOKSTORE - LIGHTING
E2.45.1	DEMO & NEW - 1ST FLOOR - WEST - ASSESSMENT LAB - LIGHTING
E2.46.1	DEMO & NEW - 2ND FLOOR - WEST - TEMP TUTORIAL & STUDY - LIGHTING
E2.47A.1	DEMO - 2ND FLOOR - EAST - A&P LAB - LIGHTING
E2.47B.1	NEW - 2ND FLOOR - EAST - A&P LAB - LIGHTING
E4.01.1	PARTIAL SINGLE LINE DIAGRAM AND PANEL SCHEDULES - ELECTRICAL
E5.01.1	DETAILS - ELECTRICAL
E5.02.1	DETAILS - LIGHTING CONTROLS
E5.03.1	DETAILS - LIGHTING CONTROLS
E5.04.1	DETAILS - LIGHTING CONTROLS
E5.05.1	DETAILS - LIGHTING CONTROLS
E5.06.1	DETAILS - LIGHTING CONTROLS

NOLL & TAM ARCHITECTS

729 Heinz Avenue
Berkeley, CA 94710
tel 510.542.2200
fax 510.542.2201

ARCHITECTS SEAL

APPROVALS

FILE NUMBER: 07-C1

DIVISION OF THE STATE ARCHITECT

APP# 01-117630

ACS_____ FLS_____ SSS_____

Date:

PROJECT 2016-0538

CONTACT Hai Phan

INTERFACE ENGINEERING

135 Main Street
Suite 400
San Francisco, CA 94105
TEL 415.489.7240
FAX 415.489.7289
www.interfaceengineering.com

PROJECT TITLE

CONTRA COSTA CCD

D-4002

DVC SAN RAMON CAMPUS EXPANSION & RENOVATION

1690 Watermill Rd.
San Ramon, CA 94582

ISSUE TITLE

INCREMENT 1

ISSUE DATE **11/30/2018**

NOLL & TAM JOB NUMBER **21630**

REVISIONS

NO.	DATE	DESCRIPTION

SHEET TITLE

SYMBOLS LIST AND GENERAL NOTES - ELECTRICAL

SHEET NUMBER

E0.01.1

9/29/2021 2:46:15 PM

LUMINAIRE SCHEDULE

TYPE	DESCRIPTION	HOUSING	SHIELDING	MOUNTING	FINISH	DRIVER	LAMP(S)	INPUT WATTS	VOLTAGE	MFG/CATALOG #	NOTES
F1	2x4 RECESSED LED TROFFER	DIE-FORMED 20-GAUGE COLD-ROLLED STEEL	UV-STABILIZED AND IMPACT-RESISTANT FROSTED VIRGIN ACRYLIC LENS	RECESSED	MATTE WHITE	INTEGRAL 0-10V DIMMING DRIVER	LED - 5486 LUMENS, 3500K, 80 CRI	40.6 W	UNV	FINELITE "HPR LED" SERIES #HPR LED-A-2x4-DCO-H-835-277V-SC-(CEILING) OR APPROVED EQUIVALENT	CONTRACTOR TO COORDINATE CEILING TYPE WITH ARCHITECT PRIOR TO ORDERING
F1E	SAME AS LUMINAIRE TYPE 'F1' EXCEPT WITH EMERGENCY BATTERY PACK	DIE-FORMED 20-GAUGE COLD-ROLLED STEEL	UV-STABILIZED AND IMPACT-RESISTANT FROSTED VIRGIN ACRYLIC LENS	RECESSED	MATTE WHITE	INTEGRAL 0-10V DIMMING DRIVER	LED - 5486 LUMENS, 3500K, 80 CRI	40.6 W	UNV	FINELITE "HPR LED" SERIES #HPR LED-A-2x4-DCO-H-835-277V-SC-(CEILING)-EM OR APPROVED EQUIVALENT	CONTRACTOR TO COORDINATE CEILING TYPE WITH ARCHITECT PRIOR TO ORDERING
F2	HIGH EFFICIENCY RECESSED LED CLEAN ROOM TROFFERS. CERTIFIED FOR ISO 5-9, 209E CLASS 100-100,000 CLEANSPACES. IP55 RATED FOR DUST AND WATER INGRESS.	STAINLESS TEEL / ALUMINUM	HIGH DURABILITY 0.135" THICK VIRGIN ACRYLIC	RECESSED	WHITE	INTEGRAL 0-10V DIMMING DRIVER	LED - 12320 LUMENS, 3500K, 80 CRI	103 W	UNV	KURTZON "CLEANROOM EL TROFFERS" SERIES #EL-R-3-2x4-3/LEDR-835-UNV OR APPROVED EQUIVALENT	
F2E	SAME AS LUMINAIRE TYPE 'F2' EXCEPT WITH EMERGENCY BATTERY PACK	STAINLESS TEEL / ALUMINUM	HIGH DURABILITY 0.135" THICK VIRGIN ACRYLIC	RECESSED	WHITE	INTEGRAL 0-10V DIMMING DRIVER	LED - 12320 LUMENS, 3500K, 80 CRI	103 W	UNV	KURTZON "CLEANROOM EL TROFFERS" SERIES #EL-R-3-2x4-3/LEDR-835-UNV-EM10 OR APPROVED EQUIVALENT	
F3	2x2 SURFACE MOUNTED LED TROFFER	DIE-FORMED 20-GAUGE COLD-ROLLED STEEL	UV-STABILIZED AND IMPACT-RESISTANT FROSTED VIRGIN ACRYLIC LENS	SURFACE	MATTE WHITE	INTEGRAL 0-10V DIMMING DRIVER	LED - 3397 LUMENS, 3500K, 80 CRI	28.5 W	UNV	FINELITE "HPR LED" SERIES #HPR LED-A-2x2-DCO-S-835-277V-SC-SM OR APPROVED EQUIVALENT	
F3E	SAME AS LUMINAIRE TYPE 'F3' EXCEPT WITH EMERGENCY BATTERY PACK	DIE-FORMED 20-GAUGE COLD-ROLLED STEEL	UV-STABILIZED AND IMPACT-RESISTANT FROSTED VIRGIN ACRYLIC LENS	SURFACE	MATTE WHITE	INTEGRAL 0-10V DIMMING DRIVER	LED - 3397 LUMENS, 3500K, 80 CRI	28.5 W	UNV	FINELITE "HPR LED" SERIES #HPR LED-A-2x2-DCO-S-835-277V-SC-SM-EM OR APPROVED EQUIVALENT	
F4	2x2 RECESSED LED TROFFER	DIE-FORMED 20-GAUGE COLD-ROLLED STEEL	UV-STABILIZED AND IMPACT-RESISTANT FROSTED VIRGIN ACRYLIC LENS	RECESSED	MATTE WHITE	INTEGRAL 0-10V DIMMING DRIVER	LED - 3397 LUMENS, 3500K, 80 CRI	28.5 W	UNV	FINELITE "HPR LED" SERIES #HPR LED-A-2x2-DCO-S-835-277V-SC-(CEILING) OR APPROVED EQUIVALENT	CONTRACTOR TO COORDINATE CEILING TYPE WITH ARCHITECT PRIOR TO ORDERING
F4E	SAME AS LUMINAIRE TYPE 'F4' EXCEPT WITH EMERGENCY BATTERY PACK	DIE-FORMED 20-GAUGE COLD-ROLLED STEEL	UV-STABILIZED AND IMPACT-RESISTANT FROSTED VIRGIN ACRYLIC LENS	RECESSED	MATTE WHITE	INTEGRAL 0-10V DIMMING DRIVER	LED - 3397 LUMENS, 3500K, 80 CRI	28.5 W	UNV	FINELITE "HPR LED" SERIES #HPR LED-A-2x2-DCO-S-835-277V-SC-(CEILING)-EM OR APPROVED EQUIVALENT	CONTRACTOR TO COORDINATE CEILING TYPE WITH ARCHITECT PRIOR TO ORDERING
F5	4 FEET LINEAR DIRECT/INDIRECT LED PENDANT	ALUMINUM	ACRYLIC DIFFUSER LENS	PENDANT	SILVER POWDERCOAT	INTEGRAL 0-10V DIMMING DRIVER	LED - 2615 LUMENS DOWN / 2258 LUMENS UP, 3500K, 80 CRI	50 W	277V	MARK ARCHITECTURAL LIGHTING "SLOT 4 LED" SERIES #S4LID-4FT-CSQ-1N35-2N35-EZB-SCT-277-SLV OR APPROVED EQUIVALENT	BOTTOM OF LUMINAIRE TO BE +8'-0" AFF.
F5E	SAME AS LUMINAIRE TYPE 'F5' EXCEPT WITH EMERGENCY BATTERY PACK	ALUMINUM	ACRYLIC DIFFUSER LENS	PENDANT	SILVER POWDERCOAT	INTEGRAL 0-10V DIMMING DRIVER	LED - 2615 LUMENS DOWN / 2258 LUMENS UP, 3500K, 80 CRI	50 W	277V	MARK ARCHITECTURAL LIGHTING "SLOT 4 LED" SERIES #S4LID-4FT-CSQ-1N35-2N35-EZB-SCT-277-SLV-EMPK OR APPROVED EQUIVALENT	BOTTOM OF LUMINAIRE TO BE +8'-0" AFF.
F6	DECORATIVE LED PENDANT	DIE CAST METAL	GLASS / ACRYLIC	PENDANT	SMOKE GLASS	ELECTRONIC DIMMER	LED - 725 LUMENS DOWN / 200 LUMENS UP, 3000K, 80 CRI	18 W	277V	TECH LIGHTING "MANETTE GRANDE PENDANT" #700-TD-MANGP-TK-TK-ZZ-LED277 OR APPROVED EQUIVALENT	BOTTOM OF LUMINAIRE TO BE +6'-0" AFF.
F7	ADJUSTABLE TUNABLE LED LIGHT MOUNTED ON THREE SCISSOR LIGHT MOVER RAIL SYSTEM			RAIL SYSTEM	BLACK	INTEGRAL LED DIMMING DRIVER	LED - TUNABLE 3000K-5600K, 92 CRI	40 W	120V	FILEX #P-180E DELTA 1 RAIL SYSTEM #4D632 OR APPROVED EQUIVALENT	CONTRACTOR TO PROVIDE LUMINAIRE AND RAIL SYSTEM. COORDINATE EXACT LOCATION OF RAIL SYSTEM WITH ARCHITECT PRIOR TO INSTALLATION.
F8	EXTERIOR WALL LED	MARINE GRADE, DIE-CAST ALUMINUM ALLOY		WALL	TBD	INTEGRAL 0-10V DIMMING DRIVER	LED - 3146 LUMENS, 3000K, 85 CRI	50 W	UNV	BEGA #33243 OR APPROVED EQUIVALENT	ARCHITECT TO SELECT FINISH AND OPTIONS
F9	LINEAR DIRECT/INDIRECT LED PENDANT WITH 2" APERTURE	PRECISION-CUT 6061-T6 EXTRUDED ALUMINUM	FROST WHITE DIFFUSER	PENDANT	SIGNAL WHITE POWDER COAT	INTEGRAL 0-10V DIMMING DRIVER	LED - 3670 LUMENS, 3500K, 90 CRI	46 W	277V	FINELITE "HP-2" SERIES #HP-2-ID-4'-H-B-935-WSO-F-96LG-277V-SC-FA-FE-(OPTIONS) OR APPROVED EQUIVALENT	SEE PLANS FOR EXACT LENGTH. BOTTOM OF LUMINAIRE TO BE +8'-0" AFF.
F9E	SAME AS LUMINAIRE TYPE 'F9' EXCEPT WITH EMERGENCY BATTERY PACK	PRECISION-CUT 6061-T6 EXTRUDED ALUMINUM	FROST WHITE DIFFUSER	PENDANT	SIGNAL WHITE POWDER COAT	INTEGRAL 0-10V DIMMING DRIVER	LED - 3670 LUMENS, 3500K, 90 CRI	46 W	277V	FINELITE "HP-2" SERIES #HP-2-ID-4'-H-B-935-WSO-F-96LG-277V-SC-FA-FE-EM-(OPTIONS) OR APPROVED EQUIVALENT	SEE PLANS FOR EXACT LENGTH. BOTTOM OF LUMINAIRE TO BE +8'-0" AFF.
F9A	2" RECESSED LED SLOT FIXTURE	PRECISION-CUT 6061-T6 EXTRUDED ALUMINUM	FROST WHITE DIFFUSER	RECESSED	MATTE WHITE	INTEGRAL 0-10V DIMMING DRIVER	LED - 2556 LUMENS, 3500K, 80 CRI	28.4 W	UNV	FINELITE "HP-2" SERIES #HP-2 R-4'-H-B35-F-277V-SC-(CEILING) OR APPROVED EQUIVALENT	CONTRACTOR TO COORDINATE CEILING TYPE WITH ARCHITECT PRIOR TO ORDERING
F10	DECORATIVE LED PENDANT	ALUMINUM	OPAL	PENDANT	TBD	INTEGRAL 0-10V DIMMING DRIVER	LED - 3692 LUMENS, 3000K, 80 CRI	37 W	277V	ZANEEN "QUANTUM 800" SERIES L30211-DV-01 OR APPROVED EQUIVALENT	ARCHITECT TO SELECT FINISH AND OPTIONS. BOTTOM OF LUMINAIRE TO BE +8'-6" AFF.
F11	6" RECESSED SQUARE LED DOWNLIGHT	16-GAUGE BLACK PAINTED STEEL FRAME, GALVANIZED STEEL JUNCTION BOX		RECESSED	WHITE		LED - 4000 LUMENS, 3500K, 85 CRI	34 W	277V	GOTHAM LIGHTING "INCITO" SERIES #ICO-SQ-35/40-6ARFL-LSS-40D-120-EZ10 OR APPROVED EQUIVALENT	
F14	LED TAPE LIGHTING IN ALUMINUM EXTRUSION	ALUMINUM	CLEAR ACRYLIC	SURFACE	BRONZE	REMOTE POWER SUPPLY - 0-10V DIMMING	LED - 560 LUMENS / FEET, 3500K, 90 CRI	6 W / FT	UNV	Q-TRAN "5050 CHIP" SERIES TAPE: #iQ20-3500K-50-90-6.0-(LENGTH) EXTRUSION: #iQA-45DW-RD-BZ-CL-(LENGTH) POWER SUPPLY: #QTM-DRIVE-60W-12VDC-0-10V-WH OR APPROVED EQUIVALENT	PROVIDE LENGTH PER PLANS, PROVIDE ALL NECESSARY ACCESSORIES AND APPURTENANCES FOR A COMPLETE SYSTEM
F21	CADAVER LAB PROCEDURE LIGHT			CEILING	WHITE	-	150W HALOGEN BULB	150 W	120V	BURTON MEDICAL "COOLSPOT II" #CS316SC	
X1	LED EXIT SIGN WITH GREEN LETTERS, EMERGENCY BATTERY BACKUP, AND SELF-DIAGNOSTICS	ENGINEERING-GRADE THERMOPLASTIC, IMPACT RESISTANT, SCRATCH-RESISTANT, AND CORROSION-PROOF		UNV	WHITE	INTEGRAL LED DRIVER	LED - GREEN LETTERS	1 W	UNV	LITHONIA "LQM" SERIES #LQM-S-W-3-G-120/277-ELN-SD OR APPROVED EQUIVALENT	

NOTES:

1. THIS LUMINAIRE SCHEDULE IS NOT COMPLETE WITHOUT A COPY OF THE PROJECT MANUAL CONTAINING THE ELECTRICAL SPECIFICATIONS.
2. DIMMING CONTROL PROTOCOL (0-10VDC AND LINE VOLTAGE) COMPATIBLE WITH LIGHTING CONTROL SYSTEM AS SPECIFIED AND SHOWN ON DRAWINGS.
3. PROVIDE +/- 12 INCH ADJUSTABILITY IN AIRCRAFT CABLE LENGTH WHERE USED.
4. COORDINATE ALL CEILING TYPES WITH LUMINAIRE LOCATIONS PRIOR TO ORDERING LUMINAIRES. COORDINATE INSTALLATION WITH REFLECTED CEILING PLAN.
5. SPECIFIED MANUFACTURERS ARE APPROVED TO SUBMIT BID. INCLUSION DOES NOT RELIEVE MANUFACTURER FROM SUPPLYING PRODUCT AS DESCRIBED.
6. REMOTE DRIVERS: UL LISTED FOR THEIR APPLICATION. DRIVERS MARKED AS UL RECOGNIZED COMPONENT BUT NOT UL LISTED ARE SUBJECT TO REMOVAL AND REPLACEMENT AT NO COST TO OWNER.
7. PROVIDE COMMISSIONING OF THE LIGHTING AND LIGHTING CONTROLS IN ACCORDANCE WITH CALIFORNIA TITLE 24 LIGHTING COMMISSIONING REQUIREMENTS.

9/29/2021 2:46:16 PM

NOLL & TAM ARCHITECTS

729 Heinz Avenue
Berkeley, CA 94710
tel 510.542.2200
fax 510.542.2201

ARCHITECTS SEAL

APPROVALS

FILE NUMBER: 07-C1

DIVISION OF THE STATE ARCHITECT

APP# 01-117630

ACS_____ FLS_____ SSS_____

Date:

PROJECT 2016-0538

CONTACT Hai Phan

INTERFACE ENGINEERING

135 Main Street
Suite 400
San Francisco, CA 94105
TEL 415.489.7240
FAX 415.489.7289
www.interfaceengineering.com

PROJECT TITLE

CONTRA COSTA CCD

D-4002

DVC SAN RAMON CAMPUS EXPANSION & RENOVATION

1690 Watermill Rd.
San Ramon, CA 94582

ISSUE TITLE

INCREMENT 1

ISSUE DATE **11/30/2018**

NOLL & TAM JOB NUMBER **21630**

REVISIONS

NO.	DATE	DESCRIPTION

SHEET TITLE

LUMINAIRE SCHEDULE - ELECTRICAL

SHEET NUMBER

E0.02.1

STATE OF CALIFORNIA
INDOOR LIGHTING
CEC-NRCC-LTI-01-E (Revised 04/16) CALIFORNIA ENERGY COMMISSION

CERTIFICATE OF COMPLIANCE	NRCC-LTI-01-E
Indoor Lighting	(Page 1 of 6)
Project Name: DVC San Ramon Campus Expansion	Date Prepared: 6/14/2018

A. General Information

Climate Zone: 12	Conditioned Floor Area: 9,623 Unconditioned Floor Area: 0						
Building Type:		☑	Nonresidential	☐	High-Rise Residential	☐	Hotel/Motel
		☐	Schools	☐	Relocatable Public Schools	☑	Conditioned Spaces	☐	Unconditioned Spaces
Phase of Construction:		☐	New Construction	☐	Addition	☑	Alteration
Method of Compliance:		☐	Complete Building	☑	Area Category	☐	Tailored
Project Address: 1690 Watermill Road							

B. Lighting Compliance Documents (select yes for each document included)

For detailed instructions on the use of this and all Energy Efficiency Standards compliance documents, refer to the Nonresidential Manual published by the California Energy Commission.

YES	NO	COMP. DOC.	TITLE
☑	☐	NRCC-LTI-01-E	Certificate of Compliance. All Pages required on plans for all submittals.
☑	☐	NRCC-LTI-02-E	Lighting Controls, Certificate of Compliance, and PAF Calculation. All Pages required on plans for all submittals.
☑	☐	NRCC-LTI-03-E	Indoor Lighting Power Allowance
☐	☑	NRCC-LTI-04-E	Tailored Method Worksheets
☑	☐	NRCC-LTI-05-E	Line Voltage Track Lighting Worksheets
☐	☐	NRCC-LTI-06-E	Indoor Lighting Existing Conditions

STATE OF CALIFORNIA
INDOOR LIGHTING
CEC-NRCC-LTI-01-E (Revised 04/16) CALIFORNIA ENERGY COMMISSION

CERTIFICATE OF COMPLIANCE	NRCC-LTI-01-E
Indoor Lighting	(Page 2 of 6)
Project Name: DVC San Ramon Campus Expansion	Date Prepared: 6/14/2018

C. Summary of Allowed Lighting Power

Conditioned and Unconditioned space Lighting must not be combined for compliance

	Indoor Lighting Power for Conditioned Spaces		Watts	Indoor Lighting Power for Unconditioned Spaces		Watts
01	**Installed** Lighting NRCC-LTI-01-E, Table H, page 5	+	5,296	**Installed** Lighting NRCC-LTI-01-E, Table H, page 5	+	0
02	Portable Only for Offices NRCC-LTI-01-E, Table G, page 4	+				
03	Minus Lighting Control Credits NRCC-LTI-02-E, page 2	-	0	Minus Lighting Control Credits NRCC-LTI-02-E, page 2	-	0
04	Adjusted **Installed** Lighting Power (row 1 plus row 2 minus row 3)	=	5,296	Adjusted **Installed** Lighting Power (row 1 minus row 3)	=	0
	Complies ONLY if **Installed** ≤ **Allowed** (Box 04 < Box 05)			Complies ONLY if **Installed** ≤ **Allowed** (Box 04 < Box 05)		
05	**Allowed** Lighting Power Conditioned NRCC-LTI-03-E, page 1 Alterations with replacement luminaires that have at least 50/35% lower power compared to the original existing luminaires, may instead use the allowed wattage from NRCC-LTI-06, page 2		10,812	**Allowed** Lighting Power Unconditioned NRCC-LTI-03-E, page 1 Alterations with replacement luminaires that have at least 50/35% lower power compared to the original existing luminaires, may instead use the allowed wattage from NRCC-LTI-06, page 2		0

D. Declaration of Required Certificates of Installation

Declare by selecting yes for all of the Certificates that will be submitted. (Retain copies and verify forms are completed and signed.)

YES	NO	Compliance Document/Title	
☑	☐	NRCI-LTI-01-E - Must be submitted for all buildings	☐ Field Inspector
☑	☐	NRCI-LTI-02-E - Must be submitted for a lighting control system, or for an Energy Management Control System (EMCS), to be recognized for compliance.	☐ Field Inspector
☑	☐	NRCI-LTI-03-E - Must be submitted for a line-voltage track lighting integral current limiter, or for a supplementary overcurrent protection panel used to energize only line-voltage track lighting, to be recognized for compliance.	☐ Field Inspector
☐	☑	NRCI-LTI-04-E - Must be submitted for two interlocked systems serving an auditorium, a convention center, a conference room, a multipurpose room, or a theater to be recognized for compliance.	☐ Field Inspector
☐	☑	NRCI-LTI-05-E - Must be submitted for a Power Adjustment Factor (PAF) to be recognized for compliance.	☐ Field Inspector
☐	☑	NRCI-LTI-06-E - Must be submitted for additional wattage installed in a video conferencing studio to be recognized for compliance.	☐ Field Inspector

STATE OF CALIFORNIA
INDOOR LIGHTING
CEC-NRCC-LTI-01-E (Revised 04/16) CALIFORNIA ENERGY COMMISSION

CERTIFICATE OF COMPLIANCE	NRCC-LTI-01-E
Indoor Lighting	(Page 3 of 6)
Project Name: DVC San Ramon Campus Expansion	Date Prepared: 6/14/2018

E. Declaration of Required Certificates of Acceptance

Declare by selecting yes for all of the Certificates that will be submitted. (Retain copies and verify forms are completed and signed.)

YES	NO	Compliance Document/Title	
☑	☐	NRCA-LTI-02-A - Must be submitted for occupancy sensors and automatic time switch controls.	☐ Field Inspector
☑	☐	NRCA-LTI-03-A - Must be submitted for automatic daylight controls.	☐ Field Inspector
☐	☑	NRCA-LTI-04-A - Must be submitted for demand responsive lighting controls.	☐ Field Inspector
☐	☑	NRCA-LTI-05-A – Must be submitted for institutional tuning power adjustment factor (PAF).	☐ Field Inspector

A Separate Lighting Schedule Must Be Filled Out for Conditioned and Unconditioned Spaces. Installed Lighting Power listed on this Lighting Schedule is only for:
☐ **CONDITIONED SPACE** ☐ **UNCONDITIONED SPACE**

F. Indoor Lighting Schedule and Field Inspection Energy Checklist

- ☐ The actual indoor lighting power listed on the next 2 pages includes all installed permanent and planned portable lighting systems.
- ☐ When Complete Building Method is used for compliance, list each different type of luminaire on separate lines.
- ☐ When Area Category Method or Tailored Method is used for compliance, list each different type of luminaire by each different function area on separate lines
- ☐ Also include track lighting in schedule, and submit the track lighting compliance document (NRCC-LTI-05-E) when line-voltage track lighting is installed.

STATE OF CALIFORNIA
INDOOR LIGHTING
CEC-NRCC-LTI-01-E (Revised 04/16) CALIFORNIA ENERGY COMMISSION

CERTIFICATE OF COMPLIANCE	NRCC-LTI-01-E
Indoor Lighting	(Page 4 of 6)
Project Name: DVC San Ramon Campus Expansion	Date Prepared: 6/14/2018

G. Installed Portable Luminaires in Offices – Exception to Section 140.6(a)

- ☐ This section shall be filled out ONLY for portable luminaires in offices (As defined in §100.1). All other planned portable luminaires shall be documented on next page of this compliance document.
- ☐ This section is used to determine if greater than 0.3 watts of portable lighting is planned for any office
- ☐ Fill out a separate line for each different office. Small offices that are typical (having the same general and portable lighting) may be grouped together. This allowance shall not be traded between offices having different lighting systems.

Office Portable Luminaire Schedule	Office Installed Portable Luminaire W/ft²							Office Location	Field Inspector	
1	2	3	4	5	6	7	8	9	10	
Complete Luminaire Description (i.e., LED, under cabinet, furniture mounted direct/indirect)	Watts per Luminaire	Number of Luminaires	Installed portable luminaire watts in this office (G02 x G03)	Square feet of this office	Watts per square foot (G04 / G05)	If G06 ≤ 0.3, enter zero; if G06 > 0.3, (G06-0.3)	(G05 x G07)	Identify Office area in which these portable luminaires are installed	Pass	Fail
									☐	☐
									☐	☐
									☐	☐
									☐	☐
									☐	☐
Total installed portable luminaire watts that are greater than 0.3 W/ft² per office:								Enter sum total of all pages into NRCC-LTI-01-E; Page 1		

STATE OF CALIFORNIA
INDOOR LIGHTING
CEC-NRCC-LTI-01-E (Revised 04/16) CALIFORNIA ENERGY COMMISSION

CERTIFICATE OF COMPLIANCE	NRCC-LTI-01-E
Indoor Lighting	(Page 5 of 6)
Project Name: DVC San Ramon Campus Expansion	Date Prepared: 6/14/2018

A Separate Lighting Schedule Must Be Filled Out for Conditioned and Unconditioned Spaces. Installed Lighting Power listed on this Lighting Schedule is only for:
☑ **CONDITIONED SPACE** ☐ **UNCONDITIONED SPACE**

H. Indoor Lighting Schedule and Field Inspection Energy Checklist

Luminaire Schedule		Installed Watts					Location	Field Inspector [1]	
01	02	03	04		05	06	07	08	
Name or Item Tag	Complete Luminaire Description (i.e, 3 lamp fluorescent troffer, F32T8, one dimmable electronic ballast)	Watts per Luminaire	How wattage was determined: CEC Default from NA8	How wattage was determined: According to §130.0(c)	Number Luminaires	Total Installed Watts in this area (H03 x H05)	Primary Function area in which these luminaires are installed	Pass	Fail
Existing :	(E) 2x4	40.0	☐	☑	4	160	Waiting Area	☐	☐
Existing :	(E) Downlight	20.0	☐	☑	2	40	Waiting Area	☐	☐
F1	F1 - Recessed 2x4 LED	40.0	☐	☑	2	80	Office <= 250 sqft	☐	☐
F1	F1 - Recessed 2x4 LED	40.0	☐	☑	11	440	Corridor/Restroom/Support	☐	☐
F1	F1 - Recessed 2x4 LED	40.0	☐	☑	15	600	Laboratory	☐	☐
F1	F1 - Recessed 2x4 LED	40.0	☐	☑	13	520	Retail Sales, Wholesale	☐	☐
F1	F1 - Recessed 2x4 LED	40.0	☐	☑	12	480	Classroom, Lecture, Training	☐	☐
F10	F10 - LED Pendant	37.0	☐	☑	4	148	Corridor/Restroom/Support	☐	☐
F11	F11 - 6" Recessed Square LED Dwnlt	34.0	☐	☑	3	102	Waiting Area	☐	☐
					INSTALLED WATTS PAGE TOTAL:	2,570	Enter sum total of all pages into NRCC-LTI-01-E; Page 2		

STATE OF CALIFORNIA
INDOOR LIGHTING
CEC-NRCC-LTI-01-E (Revised 04/16) CALIFORNIA ENERGY COMMISSION

CERTIFICATE OF COMPLIANCE	NRCC-LTI-01-E
Indoor Lighting	(Page 5 of 6)
Project Name: DVC San Ramon Campus Expansion	Date Prepared: 6/14/2018

A Separate Lighting Schedule Must Be Filled Out for Conditioned and Unconditioned Spaces. Installed Lighting Power listed on this Lighting Schedule is only for:
☑ **CONDITIONED SPACE** ☐ **UNCONDITIONED SPACE**

H. Indoor Lighting Schedule and Field Inspection Energy Checklist

Luminaire Schedule		Installed Watts					Location	Field Inspector [1]	
01	02	03	04		05	06	07	08	
Name or Item Tag	Complete Luminaire Description (i.e, 3 lamp fluorescent troffer, F32T8, one dimmable electronic ballast)	Watts per Luminaire	How wattage was determined: CEC Default from NA8	How wattage was determined: According to §130.0(c)	Number Luminaires	Total Installed Watts in this area (H03 x H05)	Primary Function area in which these luminaires are installed	Pass	Fail
F14	F14 - LED Tape in Aluminum (W/ft)	6.0	☐	☑	2	12	Retail Sales, Wholesale	☐	☐
F3	F3 - Surface 2x4 LED	40.0	☐	☑	3	120	Corridor/Restroom/Support	☐	☐
F4	F4 - Recessed 2x2 LED	28.0	☐	☑	2	52	Corridor/Restroom/Support	☐	☐
F5	F5 - D/I LED Pendant	50.0	☐	☑	16	800	Classroom, Lecture, Training	☐	☐
F6	F4 - Recessed 2x2 LED	26.0	☐	☑	4	104	Retail Sales, Wholesale	☐	☐
F7	F7 - LED Light on Rail System	40.0	☐	☑	3	120	Classroom, Lecture, Training	☐	☐
F9	F9 - D/I LED Pendant	46.0	☐	☑	33	1,518	Classroom, Lecture, Training	☐	☐
			☐	☐				☐	☐
			☐	☐				☐	☐
					INSTALLED WATTS PAGE TOTAL:	2,726	Enter sum total of all pages into NRCC-LTI-01-E; Page 2		

STATE OF CALIFORNIA
INDOOR LIGHTING
CEC-NRCC-LTI-01-E (Revised 04/16) CALIFORNIA ENERGY COMMISSION

CERTIFICATE OF COMPLIANCE	NRCC-LTI-01-E
Indoor Lighting	(Page 6 of 6)
Project Name: DVC San Ramon Campus Expansion	Date Prepared: 6/14/2018

DOCUMENTATION AUTHOR'S DECLARATION STATEMENT

1. I certify that this Certificate of Compliance documentation is accurate and complete.

Documentation Author Name: Jason Lau		Documentation Author Signature:	
Company: Interface Engineering		Signature Date: 6/14/2018	
Address: 135 Main Street		CEA Certification Identification (if applicable): E16806	
City/State/Zip: San Francisco, CA 94105		Phone: 4154897240	

RESPONSIBLE PERSON'S DECLARATION STATEMENT

I certify the following under penalty of perjury, under the laws of the State of California:

1. The information provided on this Certificate of Compliance is true and correct.
2. I am eligible under Division 3 of the Business and Professions Code to accept responsibility for the building design or system design identified on this Certificate of Compliance (responsible designer).
3. The energy features and performance specifications, materials, components, and manufactured devices for the building design or system design identified on this Certificate of Compliance conform to the requirements of Title 24, Part 1 and Part 6 of the California Code of Regulations.
4. The building design features or system design features identified on this Certificate of Compliance are consistent with the information provided on other applicable compliance documents, worksheets, calculations, plans and specifications submitted to the enforcement agency for approval with this building permit application.
5. I will ensure that a completed signed copy of this Certificate of Compliance shall be made available with the building permit(s) issued for the building, and made available to the enforcement agency for all applicable inspections. I understand that a completed signed copy of this Certificate of Compliance is required to be included with the documentation the builder provides to the building owner at occupancy.

Responsible Designer Name: Jason Lau		Responsible Designer Signature:	
Company : Interface Engineering		Date Signed: 6/14/2018	
Address: 135 Main Street		License: E16806	
City/State/Zip: San Francisco, CA 94105		Phone: 4154897240	

STATE OF CALIFORNIA
INDOOR LIGHTING – LIGHTING CONTROLS
CEC-NRCC-LTI-02-E (Revised 01/16) CALIFORNIA ENERGY COMMISSION

CERTIFICATE OF COMPLIANCE	NRCC-LTI-02-E
Indoor Lighting - Lighting Controls	(Page 1 of 3)
Project Name: DVC San Ramon Campus Expansion	Date Prepared: 6/14/2018

A. Mandatory Lighting Control Declaration Statements (Indicate if the measure applies by checking yes or no below.)

YES	NO	Control Requirements
☑	☐	Lighting shall be controlled by self-contained lighting control devices which are certified to the Energy Commission according to the Title 20 Appliance Efficiency Regulations in accordance with Section 110.9.
☑	☐	Lighting shall be controlled by a lighting control system or energy management control system in accordance with §110.9. An Installation Certificate shall be submitted in accordance with Section 130.4(b).
☑	☐	One or more Track Lighting Integral Current Limiters shall be installed which have been certified to the Energy Commission in accordance with §110.9 and §130.0. Additionally, an Installation Certificate shall be submitted in accordance with Section 130.4(b).
☐	☑	A Track Lighting Supplementary Overcurrent Protection Panel shall be installed in accordance with Section 110.9 and Section 130.0. Additionally, an Installation Certificate shall be installed in accordance with Section 130.4(b).
☐	☐	All lighting controls and equipment shall comply with the applicable requirements in §110.9 and shall be installed in accordance with the manufacturer's instructions in accordance with Section 130.1.
☐	☐	All luminaires shall be functionally controlled with manually switched ON and OFF lighting controls in accordance with Section 130.1(a).
☑	☐	General lighting shall be separately controlled from all other lighting systems in an area. Floor and wall display, window display, case display, ornamental, and special effects lighting shall each be separately controlled on circuits that are 20 amps or less. When track lighting is used, general, display, ornamental, and special effects lighting shall each be separately controlled; in accordance with Section 130.1(a)4.
☑	☐	The general lighting of any enclosed area 100 square feet or larger, with a connected lighting load that exceeds 0.5 watts per square foot shall meet the multi-level lighting control requirements in accordance with Section 130.1(b).
☑	☐	All installed indoor lighting shall be equipped with controls that meet the applicable Shut-OFF control requirements in Section 130.1(c).
☐	☐	Lighting in all Daylit Zones shall be controlled in accordance with the requirements in Section 130.1(d) and daylit zones are shown on the plans.
☐	☐	Lighting power in buildings larger than 10,000 square feet shall be capable of being automatically reduced in response to a Demand Responsive Signal in accordance with Section 130.1(e).
☐	☐	Before an occupancy permit is granted for a newly constructed building or area, or a new lighting system serving a building, area, or site is operated for normal use, indoor lighting controls serving the building, area, or site shall be certified as meeting the Acceptance Requirements for Code Compliance in accordance with Section 130.4.(a). The controls required to meet the Acceptance Requirements include automatic daylight controls, automatic shut-OFF controls, and demand responsive controls.

STATE OF CALIFORNIA
INDOOR LIGHTING – LIGHTING CONTROLS
CEC-NRCC-LTI-02-E (Revised 01/16) CALIFORNIA ENERGY COMMISSION

CERTIFICATE OF COMPLIANCE	NRCC-LTI-02-E
Indoor Lighting - Lighting Controls	(Page 2 of 3)
Project Name: DVC San Ramon Campus Expansion	Date Prepared: 6/14/2018

A separate document must be filled out for Conditioned and Unconditioned Spaces. This page is used only for the following:
☑ CONDITIONED SPACES ☐ UNCONDITIONED SPACES

B. Mandatory and Prescriptive Indoor Lighting Control Schedule, PAF Calculation, and Field Inspection Checklist

Lighting Control Schedule			Standards Complying With [1] (✓ all that apply, or enter 'E' if Exempted)							PAF Credit Calculation [2]				Field Inspector	
										Watts of Controlled Lighting	PAF	Control Credit (Watts x PAF)	✓ If Acceptance Test Required		
01	02	03	04	05	06	07	08	09	10	11	12	13	14	15	
Location in Building	Type/Description of Lighting Control (i.e.: occupancy sensor, automatic time switch, dimmer, automatic daylight, etc...)	# of Units	§130.1(a)	§130.0(b)	§130.1(c)	§130.1(d)	§130.1(e)	§140.6(a)2	§140.6(d)					Pass	Fail
Classroom	Manual Area	4	☑	☐	☐	☐	☐	☐	☐				✓	☐	☐
Classroom	Multi Level	4	☐	☑	☐	☐	☐	☐	☐				✓	☐	☐
Classroom	Occupancy Sensor	4	☐	☐	☑	☐	☐	☐	☐				✓	☐	☐
Classroom	Automatic Daylighting	1	☐	☐	☐	☑	☐	☐	☐				✓	☐	☐
Book Store	Manual Area	1	☑	☐	☐	☐	☐	☐	☐				✓	☐	☐
Book Store	Multi Level	1	☐	☑	☐	☐	☐	☐	☐				✓	☐	☐
										Control Credit PAGE TOTAL (Sum of Column 13):			0		
										IF MULTIPLE PAGES ARE USED, ENTER SUM TOTAL OF Control Credit for all pages HERE (Sum of all Column 13):			0		
													Enter Control Credit total into NRCC-LTI-01-E; Page 1.		

1. §130.1(a) = Manual area controls; §130.0(b) = Multi Level; §130.1(c) = Auto Shut-Off; §130.1(d) = Mandatory Daylight; §130.1(e) = Demand Responsive; §140.6(d) = Additional lighting controls installed to earn a PAF; §140.6(d) = Prescriptive Secondary Sidelit Daylight Controls.
2. Check Table 140.6-A for correct Factor. PAFs shall not be traded between conditioned and unconditioned spaces. As a condition to earn a PAF, an Installation Certificate is also required to be filled out, signed, and submitted.

NOLL & TAM ARCHITECTS
729 Heinz Avenue
Berkeley, CA 94710
tel 510.542.2200
fax 510.542.2201

ARCHITECTS SEAL

APPROVALS
FILE NUMBER: 07-C1

DIVISION OF THE STATE ARCHITECT
APP# 01-117630
ACS_____FLS_____SSS_____
Date:

PROJECT 2016-0538
CONTACT Hai Phan

INTERFACE ENGINEERING
135 Main Street
Suite 400
San Francisco, CA 94105
TEL 415.489.7240
FAX 415.489.7289
www.interfaceengineering.com

PROJECT TITLE
CONTRA COSTA CCD
D-4002
DVC SAN RAMON CAMPUS EXPANSION & RENOVATION
1690 Watermill Rd.
San Ramon, CA 94582

ISSUE TITLE
INCREMENT 1

ISSUE DATE **11/30/2018**
NOLL & TAM JOB NUMBER **21630**

REVISIONS

NO	DATE	DESCRIPTION

SHEET TITLE
TITLE 24 - INCREMENT 1

SHEET NUMBER
E0.03.1

9/29/2021 2:46:17 PM

STATE OF CALIFORNIA
INDOOR LIGHTING – LIGHTING CONTROLS
CEC-NRCC-LTI-02-E (Revised 01/16) CALIFORNIA ENERGY COMMISSION

CERTIFICATE OF COMPLIANCE	NRCC-LTI-02-E
Indoor Lighting - Lighting Controls	(Page 2 of 3)

Project Name: DVC San Ramon Campus Expansion | Date Prepared: 6/14/2018

A separate document must be filled out for Conditioned and Unconditioned Spaces. This page is used only for the following:
☑ CONDITIONED SPACES ☐ UNCONDITIONED SPACES

B. Mandatory and Prescriptive Indoor Lighting Control Schedule, PAF Calculation, and Field Inspection Checklist

Lighting Control Schedule			Standards Complying With [1] (✓ all that apply, or enter 'E' if Exempted)							PAF Credit Calculation [2]				Field Inspector	
										Watts of Controlled Lighting	PAF	Control Credit (K x L)	✓ If Acceptance Test Required		
01	02	03	04	05	06	07	08	09	10	11	12	13	14	15	
Location in Building	Type/Description of Lighting Control (i.e.: occupancy sensor, automatic time switch, dimmer, automatic daylight, etc...)	# of Units	§130.1(a)	§130.0(b)	§130.1(c)	§130.1(d)	§130.1(e)	§140.6(a)2	§140.6(d)					Pass	Fail
Book Store	Occupancy Sensor	1	☐	☐	☑	☐	☐	☐	☐				✓	☐	☐
Corridor	Manual Area	3	☑	☐	☐	☐	☐	☐	☐				✓	☐	☐
Corridor	Occupancy Sensor	3	☐	☐	☑	☐	☐	☐	☐				✓	☐	☐
Corridor	Multi Level	3	☐	☑	☐	☐	☐	☐	☐				✓	☐	☐
Lab	Manual Area	2	☑	☐	☐	☐	☐	☐	☐				✓	☐	☐
Lab	Multi Level	2	☐	☑	☐	☐	☐	☐	☐				✓	☐	☐
												Control Credit PAGE TOTAL (Sum of Column 13):		0	
												IF MULTIPLE PAGES ARE USED, ENTER SUM TOTAL OF Control Credit for all pages HERE (Sum of all Column 13):		0	
													Enter Control Credit total into NRCC-LTI-01-E; Page 1.		

1. §130.1(a) = Manual area controls; §130.0(b) = Multi Level; §130.1(c) = Auto Shut-Off; §130.1(d) = Mandatory Daylight; §130.1(e) = Demand Responsive; §140.6(d) = Additional lighting controls installed to earn a PAF; §140.6(d) = Prescriptive Secondary Sidelit Daylight Controls.
2. Check Table 140.6-A for correct Factor. PAFs shall not be traded between conditioned and unconditioned spaces. As a condition to earn a PAF, an Installation Certificate is also required to be filled out, signed, and submitted.

STATE OF CALIFORNIA
INDOOR LIGHTING – LIGHTING CONTROLS
CEC-NRCC-LTI-02-E (Revised 01/16) CALIFORNIA ENERGY COMMISSION

CERTIFICATE OF COMPLIANCE	NRCC-LTI-02-E
Indoor Lighting - Lighting Controls	(Page 2 of 3)

Project Name: DVC San Ramon Campus Expansion | Date Prepared: 6/14/2018

A separate document must be filled out for Conditioned and Unconditioned Spaces. This page is used only for the following:
☑ CONDITIONED SPACES ☐ UNCONDITIONED SPACES

B. Mandatory and Prescriptive Indoor Lighting Control Schedule, PAF Calculation, and Field Inspection Checklist

Lighting Control Schedule			Standards Complying With [1] (✓ all that apply, or enter 'E' if Exempted)							PAF Credit Calculation [2]				Field Inspector	
										Watts of Controlled Lighting	PAF	Control Credit (K x L)	✓ If Acceptance Test Required		
01	02	03	04	05	06	07	08	09	10	11	12	13	14	15	
Location in Building	Type/Description of Lighting Control (i.e.: occupancy sensor, automatic time switch, dimmer, automatic daylight, etc...)	# of Units	§130.1(a)	§130.0(b)	§130.1(c)	§130.1(d)	§130.1(e)	§140.6(a)2	§140.6(d)					Pass	Fail
Lab	Occupancy Sensor	2	☐	☐	☑	☐	☐	☐	☐				✓	☐	☐
Lab	Automatic Daylighting	1	☐	☐	☐	☑	☐	☐	☐				✓	☐	☐
Work Room	Manual Area	1	☑	☐	☐	☐	☐	☐	☐				✓	☐	☐
Work Room	Occupancy Sensor	1	☐	☐	☑	☐	☐	☐	☐				✓	☐	☐
			☐	☐	☐	☐	☐	☐	☐					☐	☐
			☐	☐	☐	☐	☐	☐	☐					☐	☐
												Control Credit PAGE TOTAL (Sum of Column 13):		0	
												IF MULTIPLE PAGES ARE USED, ENTER SUM TOTAL OF Control Credit for all pages HERE (Sum of all Column 13):		0	
													Enter Control Credit total into NRCC-LTI-01-E; Page 1.		

1. §130.1(a) = Manual area controls; §130.0(b) = Multi Level; §130.1(c) = Auto Shut-Off; §130.1(d) = Mandatory Daylight; §130.1(e) = Demand Responsive; §140.6(d) = Additional lighting controls installed to earn a PAF; §140.6(d) = Prescriptive Secondary Sidelit Daylight Controls.
2. Check Table 140.6-A for correct Factor. PAFs shall not be traded between conditioned and unconditioned spaces. As a condition to earn a PAF, an Installation Certificate is also required to be filled out, signed, and submitted.

STATE OF CALIFORNIA
INDOOR LIGHTING – LIGHTING CONTROLS
CEC-NRCC-LTI-02-E (Revised 01/16) CALIFORNIA ENERGY COMMISSION

CERTIFICATE OF COMPLIANCE	NRCC-LTI-02-E
Indoor Lighting - Lighting Controls	(Page 3 of 3)

Project Name: DVC San Ramon Campus Expansion | Date Prepared: 6/14/2018

DOCUMENTATION AUTHOR'S DECLARATION STATEMENT
1. I certify that this Certificate of Compliance documentation is accurate and complete.

Documentation Author Name:	Jason Lau	Documentation Author Signature:	
Company:	Interface Engineering	Signature Date:	6/14/2018
Address:	135 Main Street	CEA Certification Identification (if applicable):	E16806
City/State/Zip:	San Francisco, CA 94105	Phone:	4154897240

RESPONSIBLE PERSON'S DECLARATION STATEMENT
I certify the following under penalty of perjury, under the laws of the State of California:
1. The information provided on this Certificate of Compliance is true and correct.
2. I am eligible under Division 3 of the Business and Professions Code to accept responsibility for the building design or system design identified on this Certificate of Compliance (responsible designer).
3. The energy features and performance specifications, materials, components, and manufactured devices for the building design or system design identified on this Certificate of Compliance conform to the requirements of Title 24, Part 1 and Part 6 of the California Code of Regulations.
4. The building design features or system design features identified on this Certificate of Compliance are consistent with the information provided on other applicable compliance documents, worksheets, calculations, plans and specifications submitted to the enforcement agency for approval with this building permit application.
5. I will ensure that a completed signed copy of this Certificate of Compliance shall be made available with the building permit(s) issued for the building, and made available to the enforcement agency for all applicable inspections. I understand that a completed signed copy of this Certificate of Compliance is required to be included with the documentation the builder provides to the building owner at occupancy.

Responsible Designer Name:	Jason Lau	Responsible Designer Signature:	
Company :	Interface Engineering	Date Signed:	6/14/2018
Address:	135 Main Street	License:	E16806
City/State/Zip:	San Francisco, CA 94105	Phone:	4154897240

STATE OF CALIFORNIA
INDOOR LIGHTING POWER ALLOWANCE
CEC-NRCC-LTI-03-E (Revised 04/16) CALIFORNIA ENERGY COMMISSION

CERTIFICATE OF COMPLIANCE	NRCC-LTI-03-E
Certificate of Compliance - Indoor Lighting Power Allowance	(Page 1 of 4)

Project Name: DVC San Ramon Campus Expansion | Date Prepared: 6/14/2018

A separate page must be filled out for Conditioned and Unconditioned Spaces. This page is only for:
☑ CONDITIONED spaces ☐ UNCONDITIONED spaces

A. SUMMARY TOTALS OF LIGHTING POWER ALLOWANCES
☐ If using Complete Building Method for compliance, use only the total in column (a) as total allowed building watts.
☐ If using Area Category Method, Tailored Method, or a combination of Area Category and Tailored Method for compliance, use only the total in column (b) as the total allowed building watts

	(a)		(b)
01 Complete Building Method Allowed Watts. Documented in section B of NRCC-LTI-03-E (below on this page)			
02 Area Category Method Allowed Watts. Documented in section C-1 of NRCC-LTI-03-E (below on this page)			10,812
03 Tailored Method Allowed Watts. Documented in section A of NRCC-LTI-04-E			0
TOTAL ALLOWED BUILDING WATTS. Enter number into correct cell on NRCC-LTI-01, Page 2, Row 1			10,812

☐ Check here if building contains both conditioned and unconditioned areas.

B. COMPLETE BUILDING METHOD LIGHTING POWER ALLOWANCE

01	02		03		04
TYPE OF BUILDING (From §140.6 Table 140.6-B)	WATTS PER ft²	X	COMPLETE BLDG. AREA	=	ALLOWED WATTS
Total Area:					
Total Watts. Enter Total Watts into section A, row 1 (Above on this page)					

C -1 AREA CATEGORY METHOD TOTAL LIGHTING POWER ALLOWANCES

	Watts
Total from section C-2.	10,812
Total from section C-3.	0
Total Watts. Enter Total Watts into section A, row 2 (Above on this page).	10,812
For Alterations Only – Reduced lighting power option (Total Allowed Watts x 0.85). Enter this value into section A, row 2 if using this option.	

STATE OF CALIFORNIA
INDOOR LIGHTING POWER ALLOWANCE
CEC-NRCC-LTI-03-E (Revised 04/16) CALIFORNIA ENERGY COMMISSION

CERTIFICATE OF COMPLIANCE	NRCC-LTI-03-E
Certificate of Compliance - Indoor Lighting Power Allowance	(Page 2 of 4)

Project Name: DVC San Ramon Campus Expansion | Date Prepared: 6/14/2018

A separate page must be filled out for Conditioned and Unconditioned Spaces. This page is only for:
☑ CONDITIONED spaces ☐ UNCONDITIONED spaces

C -2 AREA CATEGORY METHOD GENERAL LIGHTING POWER ALLOWANCE
☐ Do not include portable lighting for offices. Portable lighting for offices shall be documented only in Section G of NRCC-LTI-01-E.
☐ Separately list lighting for each primary function area as defined in §100.1 of the Standards.

01		02		03		04
AREA CATEGORY (From §140.6 Table 140.6-C)		WATTS PER ft²	X	AREA (ft²)	=	ALLOWED WATTS
Location in Building	Primary Function Area per Table 140.6-C					
Classroom	Classroom, Lecture, Training	1.20		4,303		5,164
Bookstore	Retail Sales, Wholesale	1.20		1,398		1,678
Office	Office <= 250 sqft	1.00		197		197
Storage	Corridor/Restroom/Support	0.60		309		185
Workroom	Corridor/Restroom/Support	0.60		79		47
Waiting Area	Waiting Area	0.80		546		437
Corridor	Corridor/Restroom/Support	0.60		1,005		603
Lab	Laboratory	1.40		1,786		2,500
				TOTALS		9,623
Enter sum total Area Category allowed watts into section C-1 of NRCC-LTI-03-E (this compliance document)						10,812
						WATTS

STATE OF CALIFORNIA
INDOOR LIGHTING POWER ALLOWANCE
CEC-NRCC-LTI-03-E (Revised 04/16) CALIFORNIA ENERGY COMMISSION

CERTIFICATE OF COMPLIANCE	NRCC-LTI-03-E
Certificate of Compliance - Indoor Lighting Power Allowance	(Page 3 of 4)

Project Name: DVC San Ramon Campus Expansion | Date Prepared: 6/14/2018

A separate page must be filled out for Conditioned and Unconditioned Spaces. This page is only for:
☑ CONDITIONED spaces ☐ UNCONDITIONED spaces

C-3 AREA CATEGORY METHOD ADDITIONAL LIGHTING WATTAGE ALLOWANCE (from Table 140.6-C Footnotes)

01	02	03 [2]	04	05	06	07
Primary Function	Sq Ft or Linear Ft [1]	Additional Watts Allowed	Wattage Allowance (02 x 03)	Description(s) and Quantity of Special Luminaire Types in each Primary Function Area	Total Design Watts [3]	ALLOWED WATTS Smaller of 04 or 06
				TOTALS – Enter into TOTAL AREA CATEGORY METHOD ADDITIONAL ALLOWANCES – Section C-1		0

1. Use linear feet only for additional allowance for white board or chalk board. All other additional Area Category allowances shall use watts per square foot.
2 . Additional watts are available only when allowed according to the footnotes on bottom of Table 140.6-C, which include: Specialized task work; Ornamental lighting; Precision commercial and industrial work; Per linear foot of white board or chalk board; Accent, display and feature lighting; and Videoconferencing studio lighting..
3. Luminaire classification and wattage shall be determined in accordance with §130.0(c) of the Standards.

STATE OF CALIFORNIA
INDOOR LIGHTING POWER ALLOWANCE
CEC-NRCC-LTI-03-E (Revised 04/16) CALIFORNIA ENERGY COMMISSION

CERTIFICATE OF COMPLIANCE	NRCC-LTI-03-E
Certificate of Compliance - Indoor Lighting Power Allowance	(Page 4 of 4)

Project Name: DVC San Ramon Campus Expansion | Date Prepared: 6/14/2018

DOCUMENTATION AUTHOR'S DECLARATION STATEMENT
1. I certify that this Certificate of Compliance documentation is accurate and complete.

Documentation Author Name:	Jason Lau	Documentation Author Signature:	
Company:	Interface Engineering	Signature Date:	6/14/2018
Address:	135 Main Street	CEA Certification Identification (if applicable):	E16806
City/State/Zip:	San Francisco, CA 94105	Phone:	4154897240

RESPONSIBLE PERSON'S DECLARATION STATEMENT
I certify the following under penalty of perjury, under the laws of the State of California:
1. The information provided on this Certificate of Compliance is true and correct.
2. I am eligible under Division 3 of the Business and Professions Code to accept responsibility for the building design or system design identified on this Certificate of Compliance (responsible designer).
3. The energy features and performance specifications, materials, components, and manufactured devices for the building design or system design identified on this Certificate of Compliance conform to the requirements of Title 24, Part 1 and Part 6 of the California Code of Regulations.
4. The building design features or system design features identified on this Certificate of Compliance are consistent with the information provided on other applicable compliance documents, worksheets, calculations, plans and specifications submitted to the enforcement agency for approval with this building permit application.
5. I will ensure that a completed signed copy of this Certificate of Compliance shall be made available with the building permit(s) issued for the building, and made available to the enforcement agency for all applicable inspections. I understand that a completed signed copy of this Certificate of Compliance is required to be included with the documentation the builder provides to the building owner at occupancy.

Responsible Designer Name:	Jason Lau	Responsible Designer Signature:	
Company:	Interface Engineering	Date Signed:	6/14/2018
Address:	135 Main Street	License:	E16806
City/State/Zip:	San Francisco, CA 94105	Phone:	4154897240

STATE OF CALIFORNIA
LINE-VOLTAGE TRACK LIGHTING WORKSHEET
CEC-NRCC-LTI-05-E (Revised 01/16) CALIFORNIA ENERGY COMMISSION

CERTIFICATE OF COMPLIANCE	NRCC-LTI-05-E
Indoor Lighting – Line-Voltage Track Lighting Worksheet	(Page 1 of 2)

Project Name: DVC San Ramon Campus Expansion | Date Prepared: 6/14/2018

There are four different methods available for determining how many watts of line-voltage track, or line-voltage busway, has been installed. One or more methods may be used to determine how many watts of line-voltage track, or line-voltage busway, has been installed. Use this worksheet to separately calculate the input wattage for each system.

Separately enter each row of this worksheet into the Luminaire Schedule in Section H of NRCC-LTI-01-E

Method 1 is the only option available for determining wattage for track or busway rated for more than 20 amperes

☐ A. METHOD 1 – VOLT-AMPERE (VA) RATING OF THE BRANCH CIRCUIT(S)

01	02
BRANCH CIRCUIT NAME OR ID	VOLT-AMPERE (VA) RATING OF THE BRANCH CIRCUIT

☐ B. METHOD 2 – USE THE HIGHER OF 45 WATTS PER LINEAR FOOT OF TRACK OR TOTAL RATED WATTAGE OF ALL LUMINAIRES

01	02	03	04	05	06
Track or Name #	Linear Feet of Track	(W/LF)	B02 x B03 (W)	Total Rated Wattage of All Luminaires	Larger of B04 or B05
		45			
		45			
		45			

☐ C. METHOD 3 – USE THE HIGHER OF: 12.5 WATTS / LINEAR FOOT OF TRACK – OR VA RATING OF INTEGRAL CURRENT LIMITER
☐ Only integral current limiters which are certified to the Energy Commission shall be recognized by the Standards.
☐ This method shall not be recognized if an Installation Certificate is not submitted.

01	02	03	04	05	06
Track or Name #	Linear Feet of Track	(W/LF)	C02 x C03 (W)	VA Rating of Integral Current Limiter	Larger of C04 or C05
		12.5			
		12.5			
		12.5			

☐ D. METHOD 4 - DEDICATED TRACK LIGHTING SUPPLIMENTARY OVERCURRENT PROTECTION PANEL
☐ This method shall not be recognized if an Installation Certificate is not submitted.
☐ This method shall be used only for line-voltage track lighting, and shall not be recognized for any other lighting systems. If any other lighting systems or devices are installed, the supplementary overcurrent protection panel shall not be recognized for compliance with the Standards

01	02	03	04
NAME OR ID	Voltage of the Branch Circuit	Sum of the Ampere Rating of all Devices Installed in the Panel	Wattage = Sum of the Ampere Ratings of all of the Devices Times the Branch Circuit Voltage (D02 x D03)

DOCUMENTATION AUTHOR'S DECLARATION STATEMENT

NOLL & TAM ARCHITECTS
729 Heinz Avenue
Berkeley, CA 94710
tel 510.542.2200
fax 510.542.2201

ARCHITECTS SEAL

APPROVALS
FILE NUMBER: 07-C1

DIVISION OF THE STATE ARCHITECT
APP# 01-117630
ACS_____FLS_____SSS_____
Date:

PROJECT 2016-0538
CONTACT Hai Phan

INTERFACE ENGINEERING
135 Main Street
Suite 400
San Francisco, CA 94105
TEL 415.489.7240
FAX 415.489.7289
www.interfaceengineering.com

PROJECT TITLE
CONTRA COSTA CCD
D-4002
DVC SAN RAMON CAMPUS EXPANSION & RENOVATION

1690 Watermill Rd.
San Ramon, CA 94582

ISSUE TITLE
INCREMENT 1

ISSUE DATE 11/30/2018
NOLL & TAM JOB NUMBER 21630

REVISIONS

NO.	DATE	DESCRIPTION

SHEET TITLE
TITLE 24 - INCREMENT 1

SHEET NUMBER
E0.04.1

9/29/2021 2:46:18 PM

STATE OF CALIFORNIA
LINE-VOLTAGE TRACK LIGHTING WORKSHEET
CEC-NRCC-LTI-05-E (Revised 01/16) — CALIFORNIA ENERGY COMMISSION

CERTIFICATE OF COMPLIANCE	NRCC-LTI-05-E
Indoor Lighting – Line-Voltage Track Lighting Worksheet	(Page 2 of 2)
Project Name: DVC San Ramon Campus Expansion	Date Prepared: 6/14/2018

1. I certify that this Certificate of Compliance documentation is accurate and complete.

Documentation Author Name:	Jason Lau	Documentation Author Signature:	
Company:	Interface Engineering	Signature Date:	6/14/2018
Address:	135 Main Street	CEA Certification Identification (if applicable):	
City/State/Zip:	,San Francisco, CA 94105	Phone:	E16806

RESPONSIBLE PERSON'S DECLARATION STATEMENT 4154897240

I certify the following under penalty of perjury, under the laws of the State of California:
1. The information provided on this Certificate of Compliance is true and correct.
2. I am eligible under Division 3 of the Business and Professions Code to accept responsibility for the building design or system design identified on this Certificate of Compliance (responsible designer).
3. The energy features and performance specifications, materials, components, and manufactured devices for the building design or system design identified on this Certificate of Compliance conform to the requirements of Title 24, Part 1 and Part 6 of the California Code of Regulations.
4. The building design features or system design features identified on this Certificate of Compliance are consistent with the information provided on other applicable compliance documents, worksheets, calculations, plans and specifications submitted to the enforcement agency for approval with this building permit application.
5. I will ensure that a completed signed copy of this Certificate of Compliance shall be made available with the building permit(s) issued for the building, and made available to the enforcement agency for all applicable inspections. I understand that a completed signed copy of this Certificate of Compliance is required to be included with the documentation the builder provides to the building owner at occupancy.

Responsible Designer Name:	Jason Lau	Responsible Designer Signature:	
Company :	Interface Engineering	Date Signed:	
Address:	135 Main Street	License:	E16806
City/State/Zip:	San Francisco, CA 94105	Phone:	4154897240

STATE OF CALIFORNIA
OUTDOOR LIGHTING
CEC-NRCC-LTO-01-E (Revised 04/16) — CALIFORNIA ENERGY COMMISSION

CERTIFICATE OF COMPLIANCE	NRCC-LTO-01-E
Outdoor Lighting	(Page 1 of 4)
Project Name: DVC San Ramon Campus Expansion	Date Prepared:

A. General Information

Project Address: 1690 Watermill Road San Ramon, CA 94582	Total Illuminated Hardscape Area: 0

Phase of Construction: ☐ New Construction ☐ Addition ☑ Alteration

Outdoor Lighting Zone (LZ) ☐ LZ-1 ☐ LZ-2 ☑ LZ-3 ☐ LZ-4

I have confirmed with the AHJ which LZ applies to this site. For default lighting zone designations, see Title 24 Part 6, §10-114

B. Lighting Compliance Documents (check box for each document included)

For detailed instructions on the use of this and all Energy Efficiency Standards compliance documents, refer to the Nonresidential Manual published by the California Energy Commission.

☑	NRCC-LTO-01-E	Certificate of Compliance
☑	NRCC-LTO-02-E	Outdoor Lighting Controls Certificate of Compliance
☑	NRCC-LTO-03-E	Outdoor Lighting Power Allowance Certificate of Compliance
☐	NRCC-LTO-04-E	Outdoor Lighting Existing Conditions Certificate of Compliance

C. Summary of Allowed Outdoor Lighting Power		Watts
01	**Sum Total ALLOWED** Outdoor Lighting Wattage from NRCC-LTO-03-E, page 1 Alterations with NO increase of connected lighting load may instead use the allowed wattage from NRCC-LTO-04, page 2.	35
	Complies ONLY if **Installed** (Box 02) ≤ **Allowed** (Box 01)	
02	**Sum Total INSTALLED** Outdoor Lighting Wattage from NRCC-LTO-01-E, page 3.	50

D. Declaration of Required Installation Certificates
Declare by checking all Installation Certificates that will be submitted. (Retain copies and verify compliance documents are completed and signed.)

☑ NRCI-LTO-01-E - Must be submitted for all buildings	☐ Field Inspector
☑ NRCI-LTO-02-E - Must be submitted for a lighting control system, or for an Energy Management Control System (EMCS), to be recognized for compliance.	☐ Field Inspector

E. Declaration of Required Certificates of Acceptance
Declare by checking all of the Certificates of Acceptance that will be submitted. (Retain copies and verify compliance documents are completed and signed.)

☑ NRCA-LTO-02-A - Must be submitted for outdoor lighting controls.	☐ Field Inspector

F. Schedule of Luminaires Exempt from the Outdoor Lighting Power Requirements in §140.7

01	02
Name or Symbol	Description of exempt luminaire in accordance with the exemptions

STATE OF CALIFORNIA
OUTDOOR LIGHTING
CEC-NRCC-LTO-01-E (Revised 04/16) — CALIFORNIA ENERGY COMMISSION

CERTIFICATE OF COMPLIANCE	NRCC-LTO-01-E
Outdoor Lighting	(Page 2 of 4)
Project Name: DVC San Ramon Campus Expansion	Date Prepared: 6/14/2018

G. Schedule of Luminaires Exempt from the Cutoff Requirements in §130.2(b)

01	02
Name or Symbol	Description of exempt luminaire in accordance with the exemptions

H. Schedule of Luminaires Exempt from the Outdoor Lighting Control Requirements in §130.2(c)

01	02
Name or Symbol	Description of exempt luminaire in accordance with the exemptions

STATE OF CALIFORNIA
OUTDOOR LIGHTING
CEC-NRCC-LTO-01-E (Revised 04/16) — CALIFORNIA ENERGY COMMISSION

CERTIFICATE OF COMPLIANCE	NRCC-LTO-01-E
Outdoor Lighting	(Page 3 of 4)
Project Name: DVC San Ramon Campus Expansion	Date Prepared: 6/14/2018

I. Outdoor Lighting Schedule and Field Inspection Energy Checklist

Luminaire Schedule		Installed Watts				Location	Cutoff	Field Inspector	
01	02	03	04		05	06	07	08	09	
Name or Item Tag	Complete Luminaire Description	Watts per Luminaire	How wattage was determined: CEC Default Input Watt	How wattage was determined: According to §130.0(c)	Number of Luminaires	Total Installed Watts (in this area) (3 x 5)	Primary Function area in which the luminaires are installed (Outdoor Lighting Zone)	BUG Rating	Pass	Fail
F8	F8 - Exterior Wall LED	50.0	☐	☑	1	50	Retail Entrance	UH: n/a UL: n/a FVH: n/a BVH: n/a FH: n/a BH: n/a	☐	☐
			☐	☐				UH: UL: FVH: BVH: FH: BH:	☐	☐
			☐	☐				UH: UL: FVH: BVH: FH: BH:	☐	☐
INSTALLED WATTS PAGE TOTAL:						50	Enter sum total of all pages (**Sum Total INSTALLED** Outdoor lighting wattage) into NRCC-LTO-01-E, page 1.		50	

STATE OF CALIFORNIA
OUTDOOR LIGHTING
CEC-NRCC-LTO-01-E (Revised 04/16) — CALIFORNIA ENERGY COMMISSION

CERTIFICATE OF COMPLIANCE	NRCC-LTO-01-E
Outdoor Lighting	(Page 4 of 4)
Project Name: DVC San Ramon Campus Expansion	Date Prepared: 6/14/2018

DOCUMENTATION AUTHOR'S DECLARATION STATEMENT
1. I certify that this Certificate of Compliance documentation is accurate and complete.

Documentation Author Name:	Jason Lau	Documentation Author Signature:	
Company:	Interface Engineering	Signature Date:	6/14/2018
Address:	135 Main Street	CEA Certification Identification (if applicable):	E16806
City/State/Zip:	San Francisco, CA 94105	Phone:	4154897240

RESPONSIBLE PERSON'S DECLARATION STATEMENT

I certify the following under penalty of perjury, under the laws of the State of California:
1. The information provided on this Certificate of Compliance is true and correct.
2. I am eligible under Division 3 of the Business and Professions Code to accept responsibility for the building design or system design identified on this Certificate of Compliance (responsible designer).
3. The energy features and performance specifications, materials, components, and manufactured devices for the building design or system design identified on this Certificate of Compliance conform to the requirements of Title 24, Part 1 and Part 6 of the California Code of Regulations.
4. The building design features or system design features identified on this Certificate of Compliance are consistent with the information provided on other applicable compliance documents, worksheets, calculations, plans and specifications submitted to the enforcement agency for approval with this building permit application.
5. I will ensure that a completed signed copy of this Certificate of Compliance shall be made available with the building permit(s) issued for the building, and made available to the enforcement agency for all applicable inspections. I understand that a completed signed copy of this Certificate of Compliance is required to be included with the documentation the builder provides to the building owner at occupancy.

Responsible Designer Name:	Jason Lau	Responsible Designer Signature:	
Company :	Interface Engineering	Date Signed:	6/14/2018
Address:	135 Main Street	License:	E16806
City/State/Zip:	San Francisco, CA 94105	Phone:	4154897240

STATE OF CALIFORNIA
OUTDOOR LIGHTING CONTROLS
CEC-NRCC-LTO-02-E (Revised 08/16) — CALIFORNIA ENERGY COMMISSION

CERTIFICATE OF COMPLIANCE	NRCC-LTO-02-E
Outdoor Lighting Controls	(Page 1 of 3)
Project Name: DVC San Ramon Campus Expansion	Date Prepared: 6/14/2018

A. Mandatory Outdoor Lighting Control Declaration Statements

Check all that apply:
- ☐ Lighting shall be controlled by self-contained lighting control devices which are certified to the Energy Commission according to the Title 20 Appliance Efficiency Regulations in accordance with §110.9(a).
- ☑ Lighting shall be controlled by a lighting control system or energy management control system in accordance with §110.9. An Installation Certificate shall be submitted in accordance with §130.4(b).
- ☑ All lighting controls and equipment shall comply with the applicable requirements in §110.9 and shall be installed in accordance with the manufacturer's instructions in accordance with §130.0(d).
- ☐ Part-Night Outdoor Lighting Controls, as defined in Section 100.1(b), shall meet the requirements in Section 110.9(b)5.
- ☐ All outdoor incandescent luminaires rated over 100 watts, determined in accordance with Section 130.0(c), shall be controlled by a motion sensor.
- ☐ All outdoor luminaires rated for use with lamps greater than 150 lamp watts, determined in accordance with Section 130.0(c), shall comply with Uplight and Glare requirements in accordance with Section 130.2(b).
- ☑ All installed outdoor lighting shall be controlled by a photocontrol or outdoor astronomical time-switch control, or other control capable of automatically switching OFF in accordance with Section 130.2(c)1.
- ☑ All installed outdoor lighting shall be independently controlled from other electrical loads by an automatic scheduling control in accordance with Section 130.2(c)2.
- ☐ All installed outdoor lighting, where the bottom of the luminaire is mounted 24 feet or less above the ground, shall be controlled with automatic lighting controls in accordance with Section 130.2(c)3.
- ☐ For Outdoor Sales Frontage, an automatic lighting control shall be installed in accordance with Section 130.2(c)4.
- ☐ For Building Facade, Ornamental Hardscape and Outdoor Dining lighting, an automatic lighting control shall be installed in accordance with Section 130.2(c)5.
- ☑ Before an occupancy permit is granted for the newly constructed building or for the addition, or for any altered outdoor lighting, the outdoor lighting controls shall be certified as meeting the Acceptance Requirements for Code Compliance in accordance with §130.4 (a). Outdoor lighting controls shall comply with the applicable requirements of Section 130.2(c) and Reference Nonresidential Appendix NA7.8.

STATE OF CALIFORNIA
OUTDOOR LIGHTING CONTROLS
CEC-NRCC-LTO-02-E (Revised 08/16) — CALIFORNIA ENERGY COMMISSION

CERTIFICATE OF COMPLIANCE	NRCC-LTO-02-E
Outdoor Lighting Controls	(Page 2 of 3)
Project Name: DVC San Ramon Campus Expansion	Date Prepared: 6/14/2018

B. Mandatory Outdoor Lighting Control Schedule and Field Inspection Checklist

Outdoor Lighting Control Schedule		Standards Complying With (✓ all that apply, or enter 'E' if Exempted)						✓ if Acceptance Test Required	Field Inspector	
01	02	03	04	05	06	07	08	09	10	11	
Location and Application of Luminaires Being Controlled	Type/ Description of Lighting Control (i.e. outdoor motion sensor, outdoor photocontrol, outdoor astronomical time-switch control, automatic scheduling control, part-night outdoor lighting control)	# of Units	§130.2(a)	§130.2(c)1	§130.2(c)2	§130.2(c)3	§130.2(c)4	§130.2(c)5		Pass	Fail
Exterior Entrance	Astronomical Time Switch	1		✓					☑	☐	☐
									☐	☐	☐
									☐	☐	☐
									☐	☐	☐
									☐	☐	☐
									☐	☐	☐
									☐	☐	☐
									☐	☐	☐
									☐	☐	☐
									☐	☐	☐
									☐	☐	☐
									☐	☐	☐
									☐	☐	☐
									☐	☐	☐
									☐	☐	☐
									☐	☐	☐
									☐	☐	☐
									☐	☐	☐

NOLL & TAM ARCHITECTS
729 Heinz Avenue
Berkeley, CA 94710
tel 510.542.2200
fax 510.542.2201

ARCHITECTS SEAL

APPROVALS
FILE NUMBER: 07-C1

DIVISION OF THE STATE ARCHITECT
APP# 01-117630
ACS_____ FLS_____ SSS_____
Date:

PROJECT 2016-0538
CONTACT Hai Phan

INTERFACE ENGINEERING
135 Main Street
Suite 400
San Francisco, CA 94105
TEL 415.489.7240
FAX 415.489.7289
www.interfaceengineering.com

PROJECT TITLE
CONTRA COSTA CCD
D-4002
DVC SAN RAMON CAMPUS EXPANSION & RENOVATION

1690 Watermill Rd.
San Ramon, CA 94582

ISSUE TITLE
INCREMENT 1

ISSUE DATE **11/30/2018**
NOLL & TAM JOB NUMBER **21630**

REVISIONS

NO.	DATE	DESCRIPTION

SHEET TITLE
TITLE 24 - INCREMENT 1

SHEET NUMBER
E0.05.1

9/29/2021 2:46:18 PM

STATE OF CALIFORNIA
OUTDOOR LIGHTING CONTROLS
CEC-NRCC-LTO-02-E (Revised 08/16) — CALIFORNIA ENERGY COMMISSION

CERTIFICATE OF COMPLIANCE	NRCC-LTO-02-E
Outdoor Lighting Controls	(Page 3 of 3)
Project Name: DVC San Ramon Campus Expansion	Date Prepared: 6/14/2018

DOCUMENTATION AUTHOR'S DECLARATION STATEMENT

1. I certify that this Certificate of Compliance documentation is accurate and complete.

Documentation Author Name: Jason Lau	Documentation Author Signature:
Company: Interface Engineering	Signature Date: 6/14/2018
Address: 135 Main Street	CEA Certification Identification (if applicable): E16806
City/State/Zip: San Francisco, CA 94105	Phone: 4154897240

RESPONSIBLE PERSON'S DECLARATION STATEMENT

I certify the following under penalty of perjury, under the laws of the State of California:
1. The information provided on this Certificate of Compliance is true and correct.
2. I am eligible under Division 3 of the Business and Professions Code to accept responsibility for the building design or system design identified on this Certificate of Compliance (responsible designer).
3. The energy features and performance specifications, materials, components, and manufactured devices for the building design or system design identified on this Certificate of Compliance conform to the requirements of Title 24, Part 1 and Part 6 of the California Code of Regulations.
4. The building design features or system design features identified on this Certificate of Compliance are consistent with the information provided on other applicable compliance documents, worksheets, calculations, plans and specifications submitted to the enforcement agency for approval with this building permit application.
5. I will ensure that a completed signed copy of this Certificate of Compliance shall be made available with the building permit(s) issued for the building, and made available to the enforcement agency for all applicable inspections. I understand that a completed signed copy of this Certificate of Compliance is required to be included with the documentation the builder provides to the building owner at occupancy.

Responsible Designer Name: Jason Lau	Responsible Designer Signature:
Company: Interface Engineering	Date Signed: 6/14/2018
Address: 135 Main Street	License: E16806
City/State/Zip: San Francisco, CA 94105	Phone: 4154897240

STATE OF CALIFORNIA
OUTDOOR LIGHTING POWER ALLOWANCES
CEC-NRCC-LTO-03-E (Revised 01/16) — CALIFORNIA ENERGY COMMISSION

CERTIFICATE OF COMPLIANCE	NRCC-LTO-03-E
Outdoor Lighting Power Allowances	(Page 1 of 4)
Project Name: DVC San Ramon Campus Expansion	Date Prepared: 6/14/2018

A. OUTDOOR LIGHTING POWER ALLOWANCE SUMMARY

1. General Hardscape Lighting Power Allowance (Site Total from Section B of NRCC-LTO-03-E)								1.	0
2. Additional Specific "use it or lose it" Lighting Power Allowances listed in each of these cells shall be identical to total allowed watts determined in Section C-1 to C-4 of NRCC-LTO-03-E.									
PER APPLICATION from Section C-1		PER UNIT LENGTH (SALES FRONTAGE) from Section C-2		PER HARDSCAPE AREA (ORNAMENTAL LIGHTING) from Section C-3		PER SPECIFIC AREA from Section C-4			
35	+	0	+	0	+	0	=	2.	35
3. **Sum Total ALLOWED** Outdoor Lighting Wattage (add rows 1 and 2)								3.	35

B. GENERAL HARDSCAPE LIGHTING POWER ALLOWANCE FROM TABLE 140.7-A

Area Wattage Allowance (AWA)				Linear Wattage Allowance (LWA)			Initial Wattage Allowance (IWA)	Total General Hardscape Lighting Allowance
01	02	03	04	05	06	07	08	09
Name of Area	Illuminated Hardscape Area	AWA Per Square Foot	AWA (B02 x B03)	Perimeter Length of General Hardscape	LPA per Linear Foot	LWA (B05 x B06)	IWA (Watts)	B04 + B07 + B08
							TOTAL	0

STATE OF CALIFORNIA
OUTDOOR LIGHTING POWER ALLOWANCES
CEC-NRCC-LTO-03-E (Revised 01/16) — CALIFORNIA ENERGY COMMISSION

CERTIFICATE OF COMPLIANCE	NRCC-LTO-03-E
Outdoor Lighting Power Allowances	(Page 2 of 4)
Project Name: DVC San Ramon Campus Expansion	Date Prepared: 6/14/2018

C. ADDITIONAL "USE IT OR LOSE IT" OUTDOOR LIGHTING POWER ALLOWANCES FOR SPECIFIC APPLICATIONS

☐ The additional specific outdoor lighting power allowance shall be the smaller of the allowed lighting power or the actual lighting power used.
☐ Use Outdoor Lighting Zone (OLZ) that is documented on page 1 of NRCC-LTO-01-E to calculate the specific wattage allowances.

C-1. WATTAGE ALLOWANCE PER APPLICATION – Table 140.7-B

☐ Available only for qualifying locations, which include Building Entrances or Exits; Primary Entrances to Senior Care Facilities, Police Stations, Hospitals, Fire Stations, and Emergency Vehicle Facilities; Drive Up Windows; Vehicle Service Station Uncovered Fuel Dispenser, ATM Machine Lighting
☐ If more than one luminaire type is used per location, use multiple rows for that location

01	02	03	04	05	06	07	08	09	10
	ALLOTTED WATTS			DESIGN WATTS					
Name of Location for Which Allowance is Claimed	Number of Qualifying Locations	Wattage Allowance per Qualifying Location	Allotted Watts (02 x 03)	Luminaire Code or Symbol	Luminaire Description	Luminaire Quantity	Watts per Luminaire	Design Watts (07 x 08)	Allowed Watts (smaller of 04 or 09)
Book Store Entran	1	35	35	F8	F8 - Exterior Wall LED	1	50.0	50	35
								Sum total allowance per application on this site:	35

C-2. WATTAGE ALLOWANCE PER UNIT LENGTH (Sales Frontage) from Table 140.7-B

☐ If more than one luminaire type is used per location, use multiple rows for that location

01	02	03	04	05	06	07	08	09	10
	ALLOTTED WATTS			DESIGN WATTS					
Name of Location for Which Allowance is Claimed	Linear Feet of Sales Frontage	Wattage Allowance per Linear Foot	Allotted Watts (02 x 03)	Luminaire Code or Symbol	Luminaire Description	Luminaire Quantity	Watts per Luminaire	Design Watts (07 x 08)	Allowed Watts (smaller of 04 or 09)
								Sum total allowance for sales frontage on the site:	0

STATE OF CALIFORNIA
OUTDOOR LIGHTING POWER ALLOWANCES
CEC-NRCC-LTO-03-E (Revised 01/16) — CALIFORNIA ENERGY COMMISSION

CERTIFICATE OF COMPLIANCE	NRCC-LTO-03-E
Outdoor Lighting Power Allowances	(Page 3 of 4)
Project Name: DVC San Ramon Campus Expansion	Date Prepared: 6/14/2018

C-3. WATTAGE ALLOWANCE PER SQUARE FOOT OF HARDSCAPE AREA (Ornamental Lighting) – Table 140.7-B

☐ Allowance for the total site illuminated hardscape area. Luminaires qualifying for this allowance shall be rated for 100 watts or less as determined in accordance with Section 130.0(c), and shall be post-top luminaires, lanterns, pendant luminaires, or chandeliers.
☐ If more than one luminaire type is used per location, use multiple rows for that location

01	02	03	04	05	06	07	08	09	10
	ALLOTTED WATTS				DESIGN WATTS				
Name of area for which ornamental allowance is claimed	Square Feet of Hardscape	Wattage Allowance per Square Foot	Allotted Watts (02 x 03)	Luminaire Code or Symbol	Luminaire Description	Luminaire Quantity	Watts per Luminaire	Design Watts (07 x 08)	Allowed Watts (smaller of 04 or 09)
								Sum total allowance for ornamental lighting on the site:	0

C-4. WATTAGE ALLOWANCE PER SQUARE FOOT OF SPECIFIC AREA - Table 140.7-B

☐ Allowances for Building Facades; Outdoor Sales Lots; Vehicle Service Station Hardscape; Vehicle Service Station Canopies; Sales Canopies; Non-sales Canopies; Tunnels; Guard Stations; Student Pick-up/Drop-off zone: Outdoor Dining; Special Security Lighting for Retail Parking and Pedestrian Hardscape.
☐ If more than one luminaire type is used per location, use multiple rows for that location

01	02	03	04	05	06	07	08	09	10
	ALLOTTED WATTS				DESIGN WATTS				
Name of Location for Which Allowance is Claimed	Illuminated Area of Application	Wattage Allowance per square Foot	Allotted Watts (02 x 03)	Luminaire Code or Symbol	Luminaire Description	Luminaire Quantity	Watts per Luminaire	Design Watts (07 x 08)	Allowed Watts (smaller of 04 or 09)
								Sum total allowance for specific area on the site:	0

STATE OF CALIFORNIA
OUTDOOR LIGHTING POWER ALLOWANCES
CEC-NRCC-LTO-03-E (Revised 01/16) — CALIFORNIA ENERGY COMMISSION

CERTIFICATE OF COMPLIANCE	NRCC-LTO-03-E
Outdoor Lighting Power Allowances	(Page 4 of 4)
Project Name: DVC San Ramon Campus Expansion	Date Prepared: 6/14/2018

DOCUMENTATION AUTHOR'S DECLARATION STATEMENT

1. I certify that this Certificate of Compliance documentation is accurate and complete.

Documentation Author Name: Jason Lau	Documentation Author Signature:
Company: Interface Engineering	Signature Date: 6/14/2018
Address: 135 Main Street	CEA Certification Identification (if applicable): E16806
City/State/Zip: San Francisco, CA 94105	Phone: 4154897240

RESPONSIBLE PERSON'S DECLARATION STATEMENT

I certify the following under penalty of perjury, under the laws of the State of California:
1. The information provided on this Certificate of Compliance is true and correct.
2. I am eligible under Division 3 of the Business and Professions Code to accept responsibility for the building design or system design identified on this Certificate of Compliance (responsible designer).
3. The energy features and performance specifications, materials, components, and manufactured devices for the building design or system design identified on this Certificate of Compliance conform to the requirements of Title 24, Part 1 and Part 6 of the California Code of Regulations.
4. The building design features or system design features identified on this Certificate of Compliance are consistent with the information provided on other applicable compliance documents, worksheets, calculations, plans and specifications submitted to the enforcement agency for approval with this building permit application.
5. I will ensure that a completed signed copy of this Certificate of Compliance shall be made available with the building permit(s) issued for the building, and made available to the enforcement agency for all applicable inspections. I understand that a completed signed copy of this Certificate of Compliance is required to be included with the documentation the builder provides to the building owner at occupancy.

Responsible Designer Name: Jason Lau	Responsible Designer Signature:
Company: Interface Engineering	Date Signed: 6/14/2018
Address: 135 Main Street	License: E16806
City/State/Zip: San Francisco, CA 94105	Phone: 4154897240

NOLL & TAM ARCHITECTS
729 Heinz Avenue
Berkeley, CA 94710
tel 510.542.2200
fax 510.542.2201

ARCHITECTS SEAL

APPROVALS
FILE NUMBER: 07-C1
DIVISION OF THE STATE ARCHITECT
APP# 01-117630
ACS_____FLS_____SSS_____
Date:

PROJECT 2016-0538
CONTACT Hai Phan

INTERFACE ENGINEERING
135 Main Street
Suite 400
San Francisco, CA 94105
TEL 415.489.7240
FAX 415.489.7289
www.interfaceengineering.com

PROJECT TITLE
CONTRA COSTA CCD
D-4002
DVC SAN RAMON CAMPUS EXPANSION & RENOVATION
1690 Watermill Rd.
San Ramon, CA 94582

ISSUE TITLE
INCREMENT 1

ISSUE DATE 11/30/2018
NOLL & TAM JOB NUMBER 21630

REVISIONS

NO.	DATE	DESCRIPTION

SHEET TITLE
TITLE 24 - INCREMENT 1

SHEET NUMBER
E0.06.1

9/29/2021 2:46:19 PM

SHEET KEYNOTES

1. PROVIDE 2-1/2" CONDUIT WITH PULL CORD ONLY FROM DISTRIBUTION PANEL 'PPB' FOR FUTURE LLRC BUILDING.
2. ROUTE CONDUIT FROM CEILING DOWN ALONG INTERIOR WALL AND STUB CONDUIT OUT AT 18"AFF AND CAP AT EXTERIOR FOR INCREMENT 2.

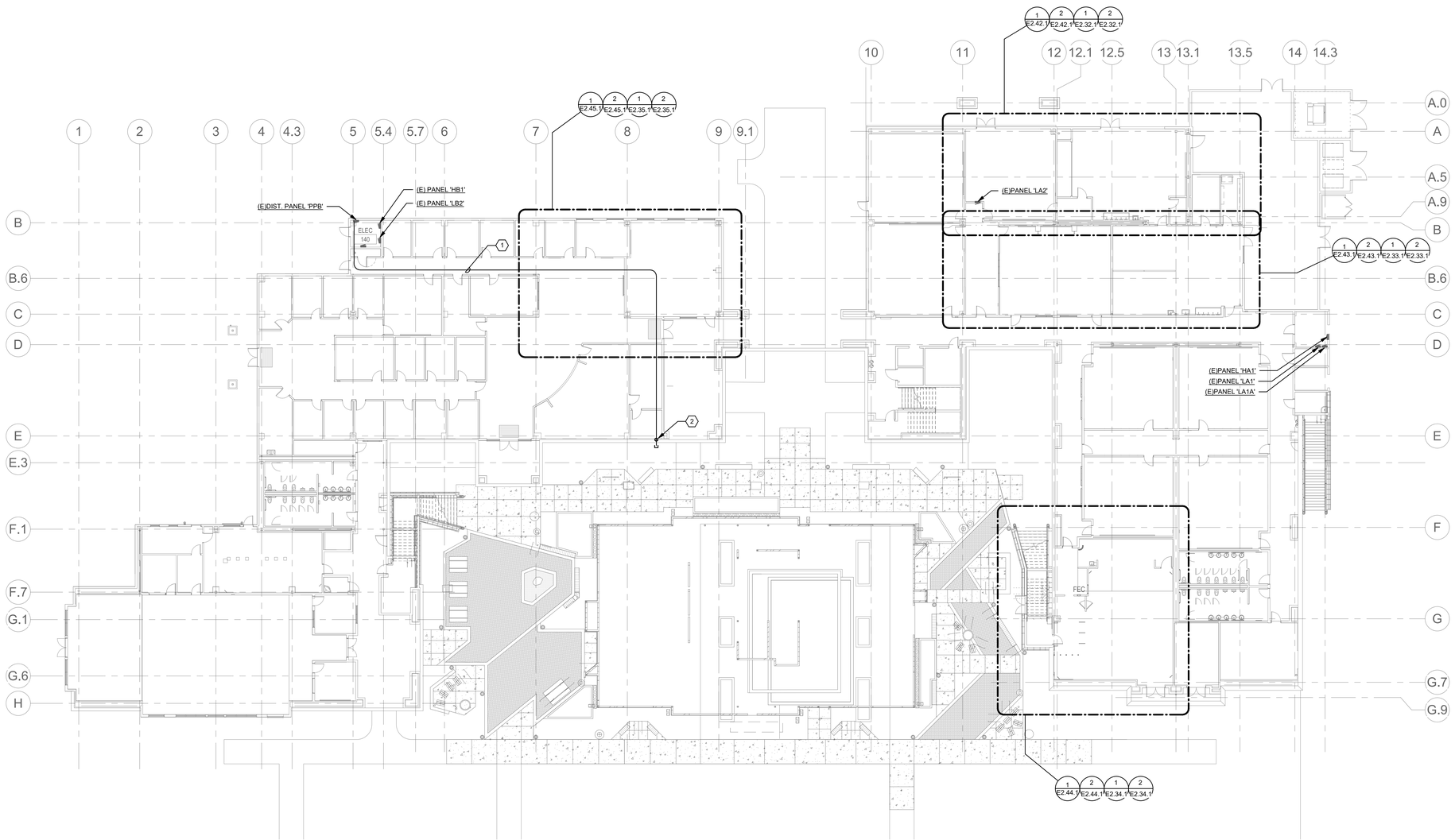

1 1ST FLOOR OVERALL PLAN - ELECTRICAL

0' 4' 8' 16'
1/16" = 1'-0"

9/29/2021 2:46:22 PM

NOLL & TAM ARCHITECTS

729 Heinz Avenue
Berkeley, CA 94710
tel 510.542.2200
fax 510.542.2201

ARCHITECTS SEAL

APPROVALS

FILE NUMBER: 07-C1

DIVISION OF THE STATE ARCHITECT

APP# 01-117630

ACS_____ FLS_____ SSS_____

Date:

PROJECT 2016-0538

CONTACT Hai Phan

INTERFACE ENGINEERING
135 Main Street
Suite 400
San Francisco, CA 94105
TEL 415.489.7240
FAX 415.489.7289
www.interfaceengineering.com

PROJECT TITLE

CONTRA COSTA CCD
D-4002
DVC SAN RAMON CAMPUS EXPANSION & RENOVATION

1690 Watermill Rd.
San Ramon, CA 94582

ISSUE TITLE

INCREMENT 1

ISSUE DATE	11/30/2018
NOLL & TAM JOB NUMBER	21630

REVISIONS

NO.	DATE	DESCRIPTION

SHEET TITLE

1ST FLOOR OVERALL PLAN - ELECTRICAL

SHEET NUMBER

E2.30A.1

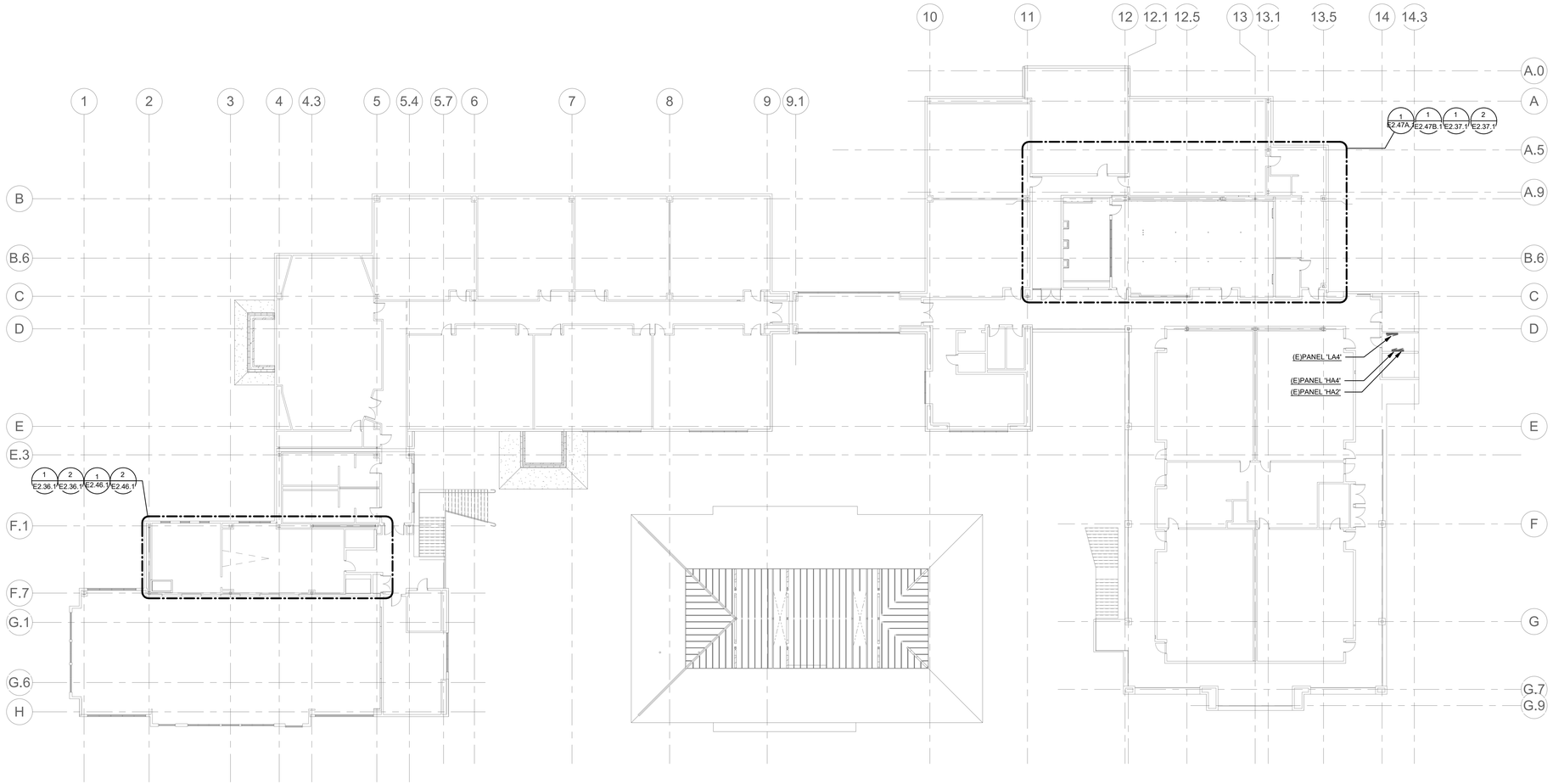

1 2ND FLOOR OVERALL PLAN - ELECTRICAL

0' 8' 16' 32'

1/16" = 1'-0"

9/29/2021 2:46:25 PM

NOLL & TAM ARCHITECTS

729 Heinz Avenue
Berkeley, CA 94710
tel 510.542.2200
fax 510.542.2201

ARCHITECTS SEAL

APPROVALS

FILE NUMBER: 07-C1

DIVISION OF THE STATE ARCHITECT

APP# 01-117630

ACS_____ FLS_____ SSS_____

Date:

PROJECT 2016-0538

CONTACT Hai Phan

INTERFACE ENGINEERING

135 Main Street
Suite 400
San Francisco, CA 94105
TEL 415.489.7240
FAX 415.489.7289
www.interfaceengineering.com

PROJECT TITLE

CONTRA COSTA CCD

D-4002
DVC SAN RAMON CAMPUS EXPANSION & RENOVATION

1690 Watermill Rd.
San Ramon, CA 94582

ISSUE TITLE

INCREMENT 1

ISSUE DATE	11/30/2018
NOLL & TAM JOB NUMBER	21630

REVISIONS

NO.	DATE	DESCRIPTION

SHEET TITLE

2ND FLOOR OVERALL PLAN - ELECTRICAL

SHEET NUMBER

E2.30B.1

GENERAL SHEET NOTES

A. COORDINATE EXACT LOCATION AND MOUNTING HEIGHT OF RECEPTACLES AND ELECTRICAL DEVICES WITH ARCHITECT PRIOR TO INSTALLATION.

B. COORDINATE EXACT LOCATION AND POWER REQUIREMENTS OF HVAC UNITS WITH DIVISION 23 PRIOR TO INSTALLATION.

C. ALL RECEPTACLES, TEL/DATA OUTLETS, AND ELECTRICAL DEVICES DENOTED WITH AN (X) TO BE DISCONNECTED AND REMOVED. TERMINATE EXISTING CIRCUIT AND ASSOCIATED WIRING UP TO CEILING JUNCTION BOX FOR REUSE.

SHEET KEYNOTES

1. PROVIDE DEDICATED POWER FOR CEILING MOUNTED PROJECTOR.
2. PROVIDE RECEPTACLE FOR TEACHER'S STATION.
3. PROVIDE RECEPTACLE FOR AV BLACK BOX.
4. PROVIDE QUAD-RECEPTACLE FOR RAIL MOUNTED LIGHTS.

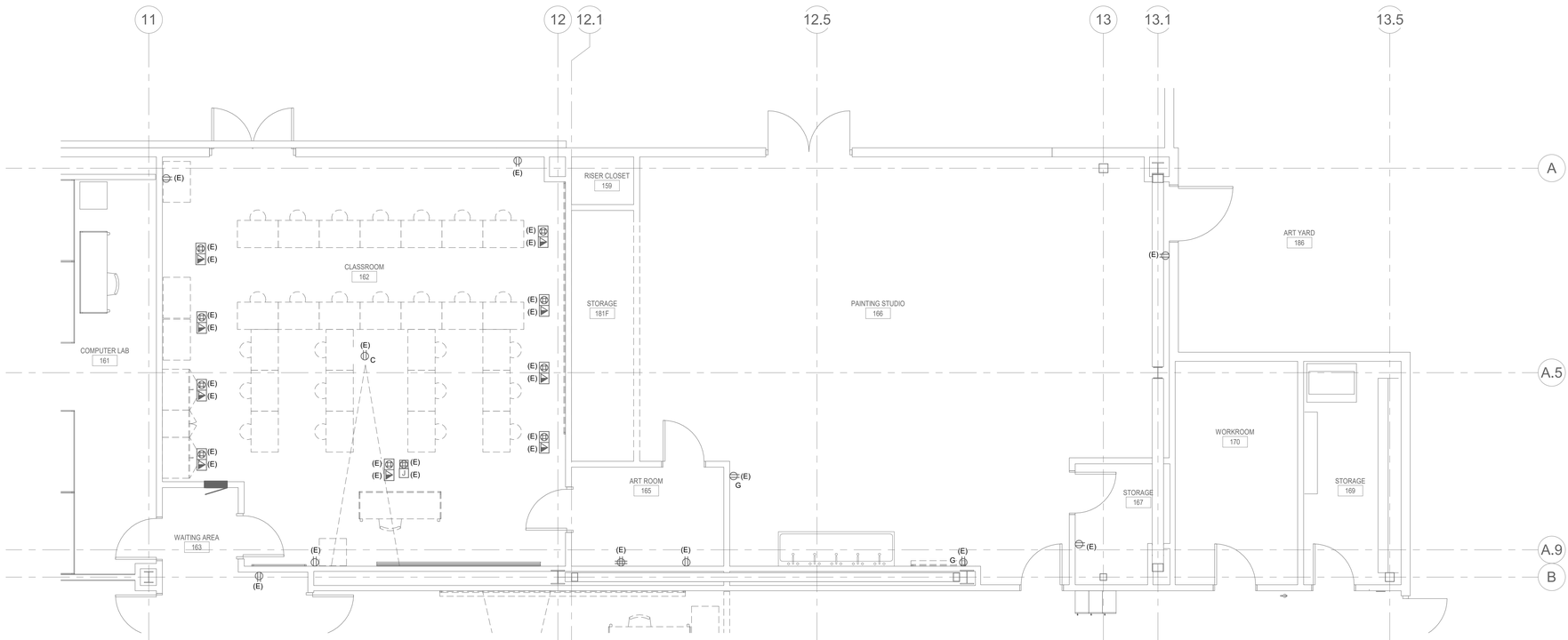

1 DEMO - 1ST FLOOR PLAN - CLASSROOM - PAINTING STUDIO - POWER

0' 2' 4' 8'
1/4" = 1'-0"

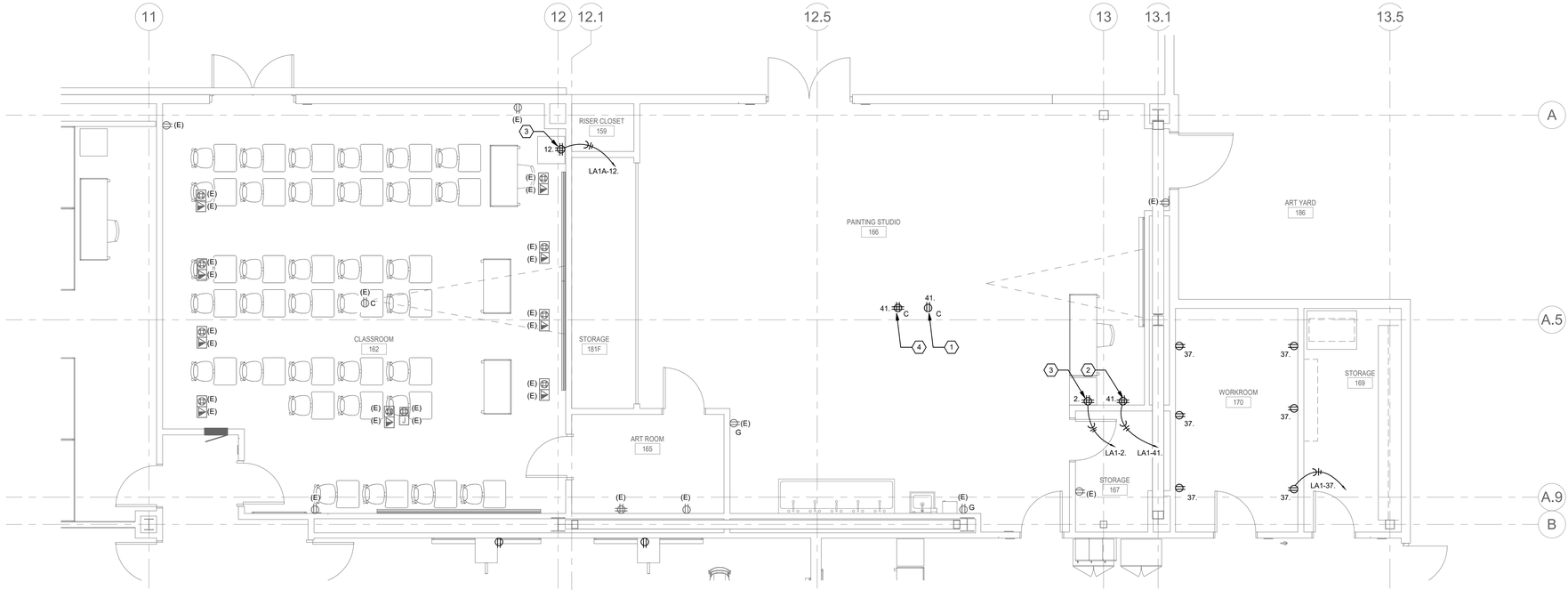

2 NEW - 1ST FLOOR PLAN - CLASSROOM - PAINTING STUDIO - POWER

0' 2' 4' 8'
1/4" = 1'-0"

9/29/2021 2:46:28 PM

NOLL & TAM ARCHITECTS

729 Heinz Avenue
Berkeley, CA 94710
tel 510.542.2200
fax 510.542.2201

ARCHITECTS SEAL

APPROVALS

FILE NUMBER: 07-C1

DIVISION OF THE STATE ARCHITECT

APP# 01-117630

ACS_____ FLS_____ SSS_____

Date:

PROJECT 2016-0538

CONTACT Hai Phan

INTERFACE ENGINEERING

135 Main Street
Suite 400
San Francisco, CA 94105
TEL 415.489.7240
FAX 415.489.7289
www.interfaceengineering.com

PROJECT TITLE

CONTRA COSTA CCD
D-4002
DVC SAN RAMON CAMPUS EXPANSION & RENOVATION

1690 Watermill Rd.
San Ramon, CA 94582

ISSUE TITLE

INCREMENT 1

ISSUE DATE	11/30/2018
NOLL & TAM JOB NUMBER	21630

REVISIONS

NO.	DATE	DESCRIPTION

SHEET TITLE

DEMO & NEW - 1ST FLOOR - EAST - CLASSROOM - PAINTING STUDIO - POWER

SHEET NUMBER

E2.32.1

GENERAL SHEET NOTES

A. COORDINATE EXACT LOCATION AND MOUNTING HEIGHT OF RECEPTACLES AND ELECTRICAL DEVICES WITH ARCHITECT PRIOR TO INSTALLATION.

B. COORDINATE EXACT LOCATION AND POWER REQUIREMENTS OF HVAC UNITS WITH DIVISION 23 PRIOR TO INSTALLATION.

C. ALL RECEPTACLES, TEL/DATA OUTLETS, AND ELECTRICAL DEVICES DENOTED WITH AN (X) TO BE DISCONNECTED AND REMOVED. TERMINATE EXISTING CIRCUIT AND ASSOCIATED WIRING UP TO CEILING JUNCTION BOX FOR REUSE.

SHEET KEYNOTES

1. EXISTING JUNCTION BOXES AT CEILING FOR CONNECTION TO PORTABLE DROP CORDS FOR POTTERS WHEELS.
2. PROVIDE RECEPTACLE FOR AV BLACK BOX.
3. PROVIDE DEDICATED RECEPTACLE FOR CEILING MOUNTED PROJECTOR.
4. PROVIDE RECEPTACLE FOR TEACHER'S STATION.
5. PROVIDE POWER CONNECTION TO MOTORIZED PROJECTOR SCREEN.
6. PROVIDE RECEPTACLE FOR SHORT THROW PROJECTOR.

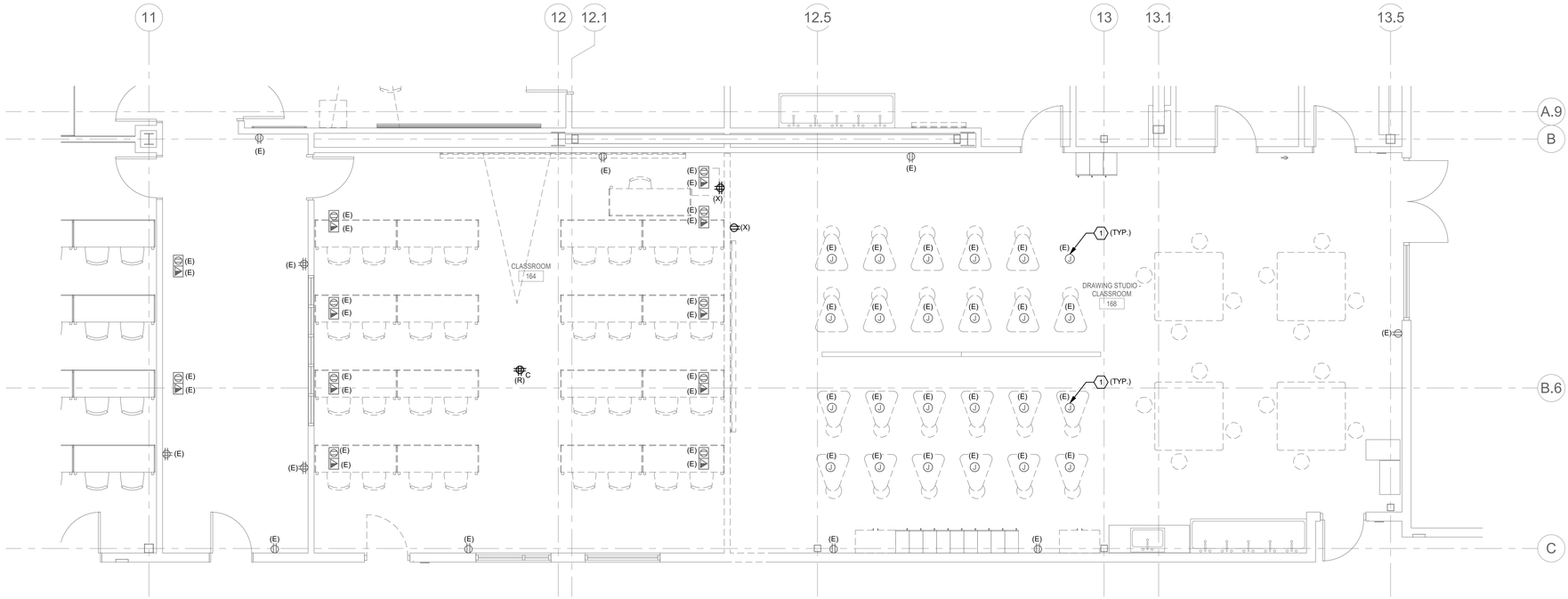

1 DEMO - 1ST FLOOR PLAN - CLASSROOM - CERAMIC STUDIO - POWER

0' 2' 4' 8'
1/4" = 1'-0"

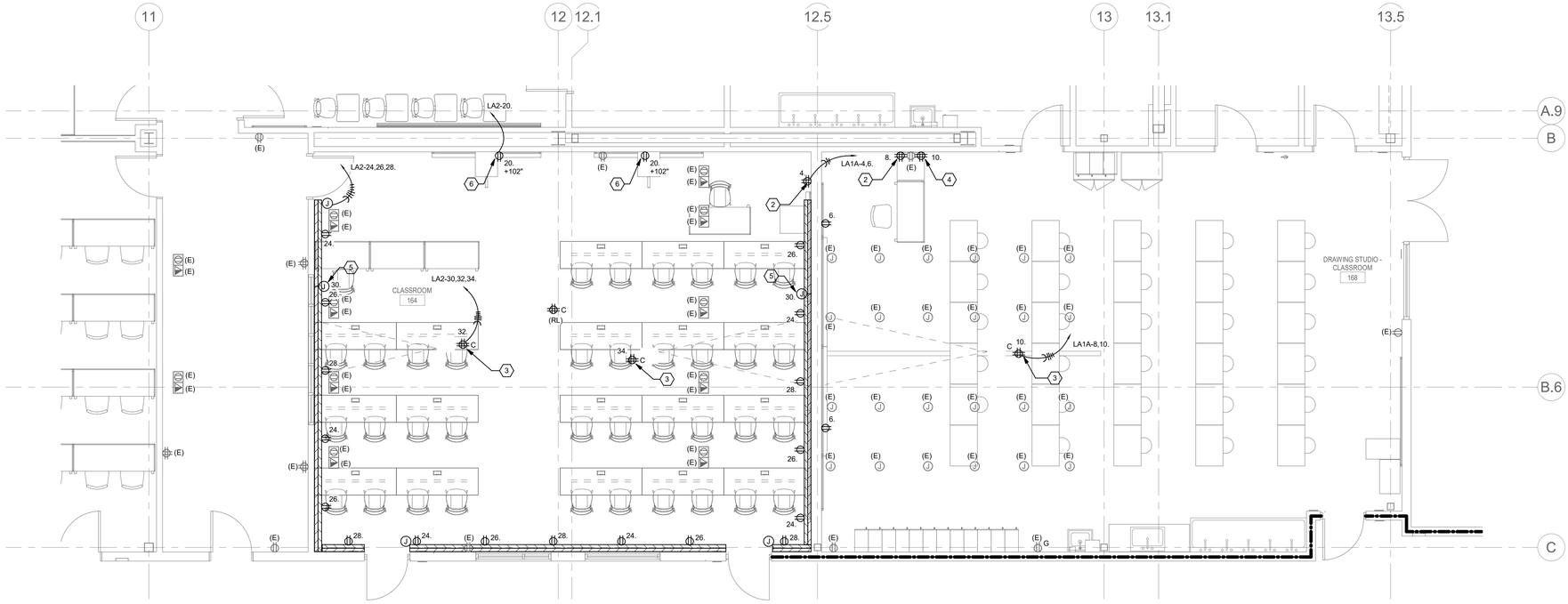

2 NEW - 1ST FLOOR PLAN - CLASSROOM - DRAWING STUDIO - POWER

0' 2' 4' 8'
1/4" = 1'-0"

9/29/2021 2:46:31 PM

NOLL & TAM ARCHITECTS

729 Heinz Avenue
Berkeley, CA 94710
tel 510.542.2200
fax 510.542.2201

ARCHITECTS SEAL

APPROVALS

FILE NUMBER: 07-C1

DIVISION OF THE STATE ARCHITECT

APP# 01-117630

ACS_____ FLS_____ SSS_____

Date:

PROJECT 2016-0538

CONTACT Hai Phan

INTERFACE ENGINEERING

135 Main Street
Suite 400
San Francisco, CA 94105
TEL 415.489.7240
FAX 415.489.7289
www.interfaceengineering.com

PROJECT TITLE

CONTRA COSTA CCD
D-4002
DVC SAN RAMON CAMPUS EXPANSION & RENOVATION

1690 Watermill Rd.
San Ramon, CA 94582

ISSUE TITLE

INCREMENT 1

ISSUE DATE	11/30/2018
NOLL & TAM JOB NUMBER	21630

REVISIONS

NO.	DATE	DESCRIPTION

SHEET TITLE

DEMO & NEW - 1ST FLOOR - EAST - CLASSROOM - DRAWING STUDIO - POWER

SHEET NUMBER

E2.33.1

GENERAL SHEET NOTES

A. COORDINATE EXACT LOCATION AND MOUNTING HEIGHT OF RECEPTACLES AND ELECTRICAL DEVICES WITH ARCHITECT PRIOR TO INSTALLATION.

B. COORDINATE EXACT LOCATION AND POWER REQUIREMENTS OF HVAC UNITS WITH DIVISION 23 PRIOR TO INSTALLATION.

C. ALL RECEPTACLES, TEL/DATA OUTLETS, AND ELECTRICAL DEVICES DENOTED WITH AN (X) TO BE DISCONNECTED AND REMOVED. TERMINATE EXISTING CIRCUIT AND ASSOCIATED WIRING UP TO CEILING JUNCTION BOX FOR REUSE.

SHEET KEYNOTES

1. PROVIDE JUNCTION BOXES FOR POWER CONNECTION TO AUTOMATIC DOOR OPERATOR.
2. PROVIDE DEDICATED RECEPTACLE FOR REAR LOADING BEVERAGE COOLERS, REFRIGERATOR, AND FREEZER. RECEPTACLES TO BE SURFACE MOUNTED ON THE FLOOR. COORDINATE EXACT MOUNTING LOCATION WITH ARCHITECT PRIOR TO INSTALLATION.
3. CONNECT TO EXISTING RECEPTACLE CIRCUIT 'L1A-19.' AS SHOWN.
4. MOUNT RECEPTACLES TO CASEWORK FACE. COORDINATE WITH CASEWORK VENDOR AND ARCHITECT FOR FINAL LOCATION. CONDUIT RUN INSIDE CASEWORK CHASE.
5. PROVIDE DEDICATED RECEPTACLES FOR MINI BLENDING BAR.

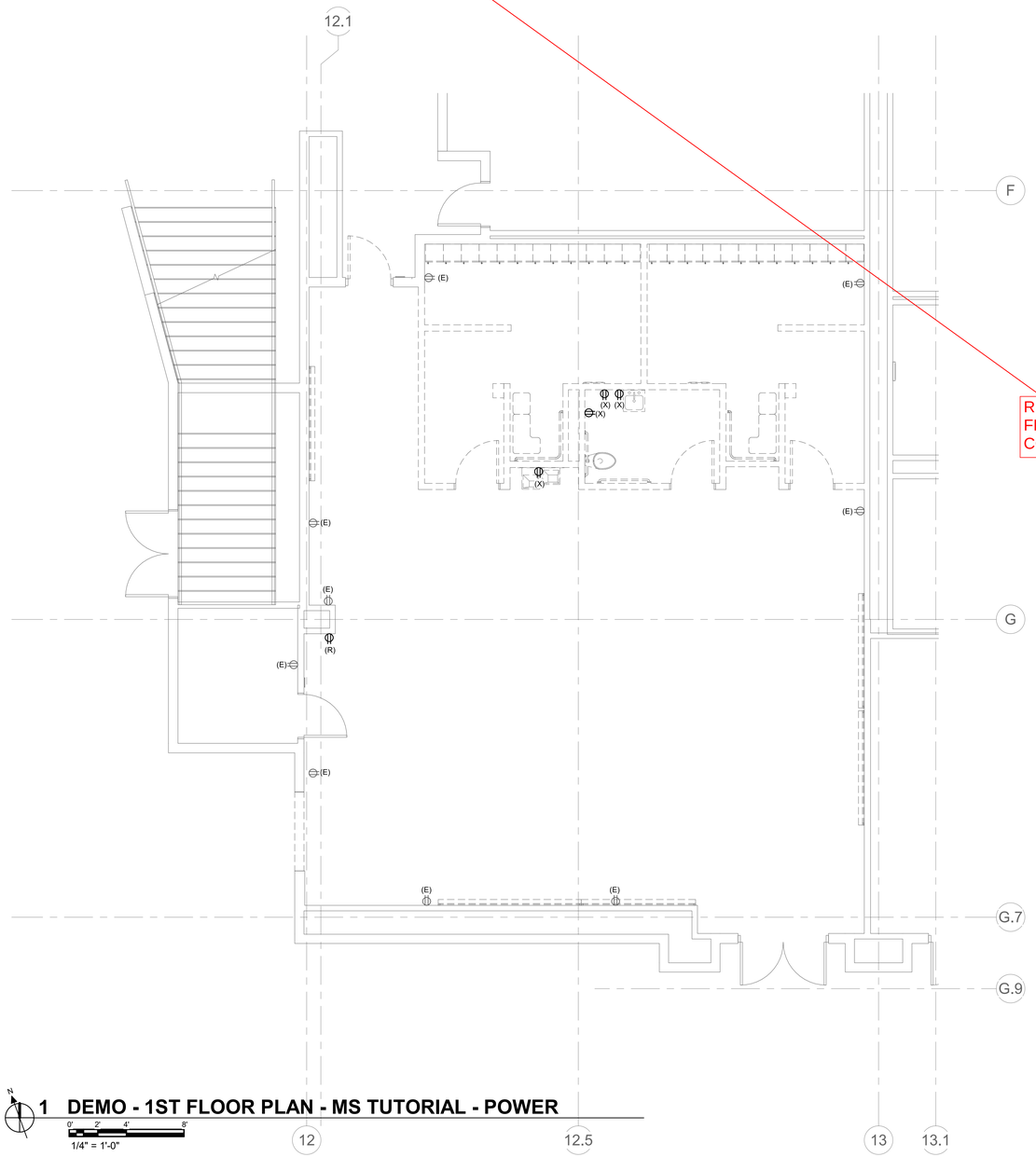

1 DEMO - 1ST FLOOR PLAN - MS TUTORIAL - POWER

1/4" = 1'-0"

REMOVED FROM SCOPE CCDA-8

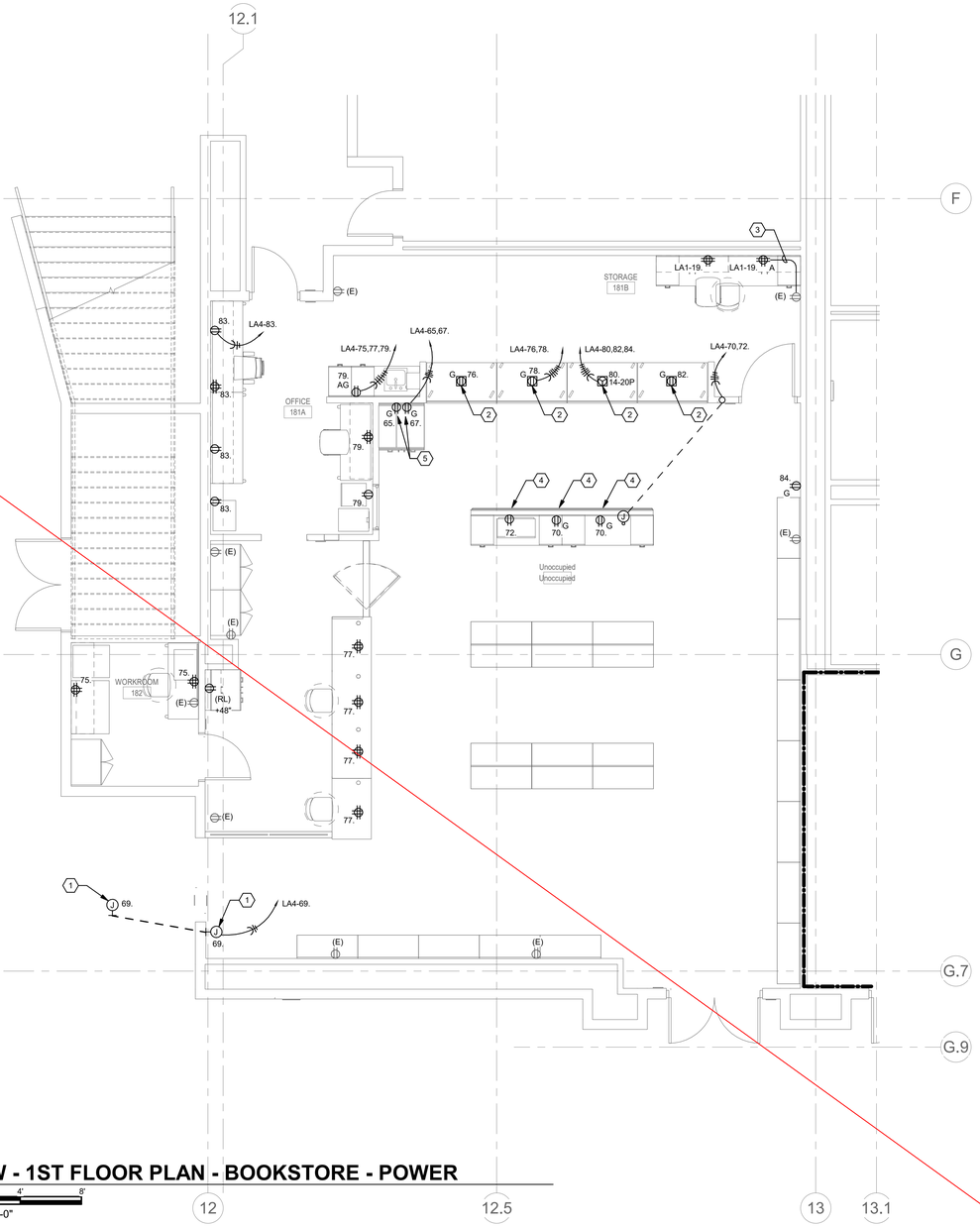

2 NEW - 1ST FLOOR PLAN - BOOKSTORE - POWER

1/4" = 1'-0"

NOLL & TAM ARCHITECTS

729 Heinz Avenue
Berkeley, CA 94710
tel 510.542.2200
fax 510.542.2201

ARCHITECTS SEAL

APPROVALS

FILE NUMBER: 07-C1

DIVISION OF THE STATE ARCHITECT

APP# 01-117630

ACS_____ FLS_____ SSS_____

Date:

PROJECT 2016-0538

CONTACT Hai Phan

INTERFACE ENGINEERING

135 Main Street
Suite 400
San Francisco, CA 94105

TEL 415.489.7240
FAX 415.489.7289
www.interfaceengineering.com

PROJECT TITLE

CONTRA COSTA CCD

D-4002

DVC SAN RAMON CAMPUS EXPANSION & RENOVATION

1690 Watermill Rd.
San Ramon, CA 94582

ISSUE TITLE

INCREMENT 1

ISSUE DATE	11/30/2018
NOLL & TAM JOB NUMBER	21630

REVISIONS

NO.	DATE	DESCRIPTION

SHEET TITLE

DEMO & NEW - 1ST FLOOR - EAST - BOOKSTORE - POWER

SHEET NUMBER

E2.34.1

9/29/2021 2:46:34 PM

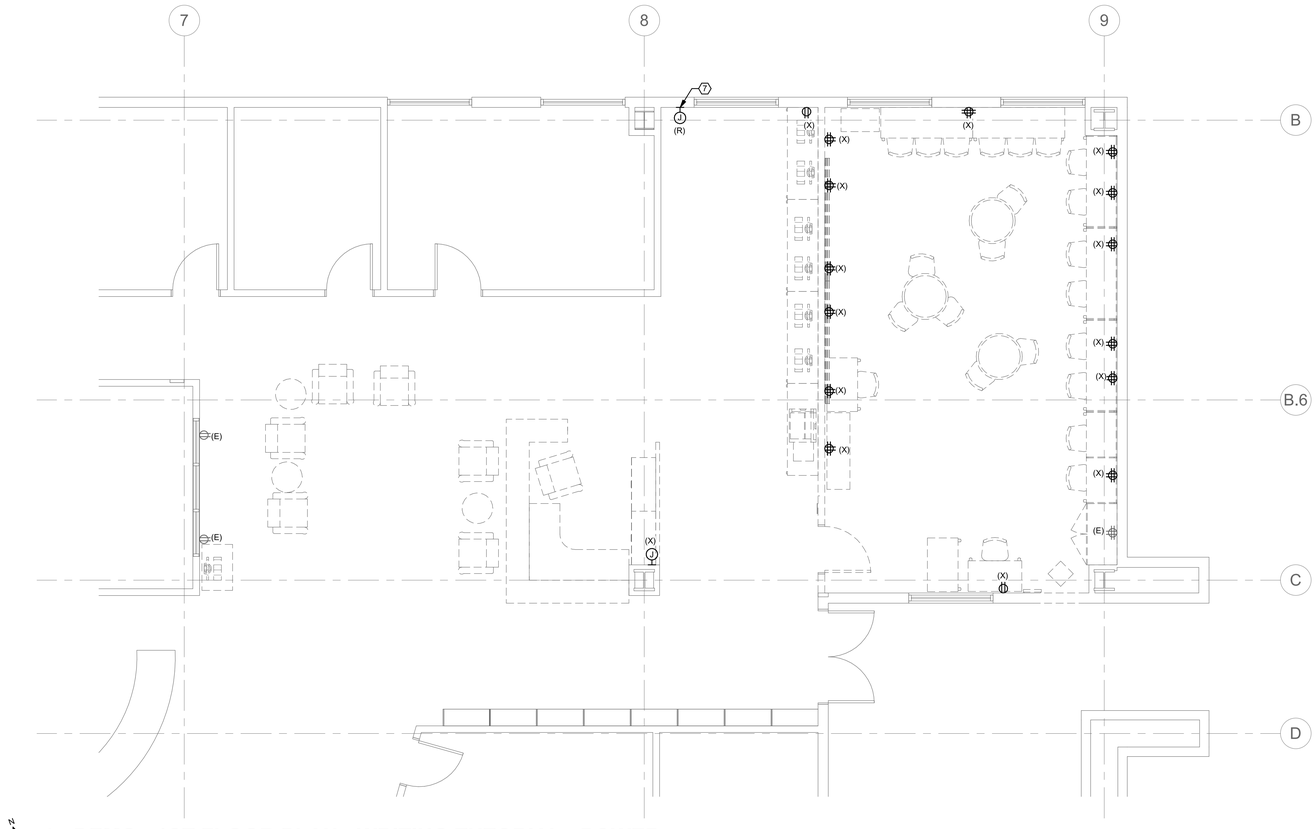

1 DEMO - 1ST FLOOR PLAN - WRITING TUTORIAL - POWER

0' 2' 4' 8'

1/4" = 1'-0"

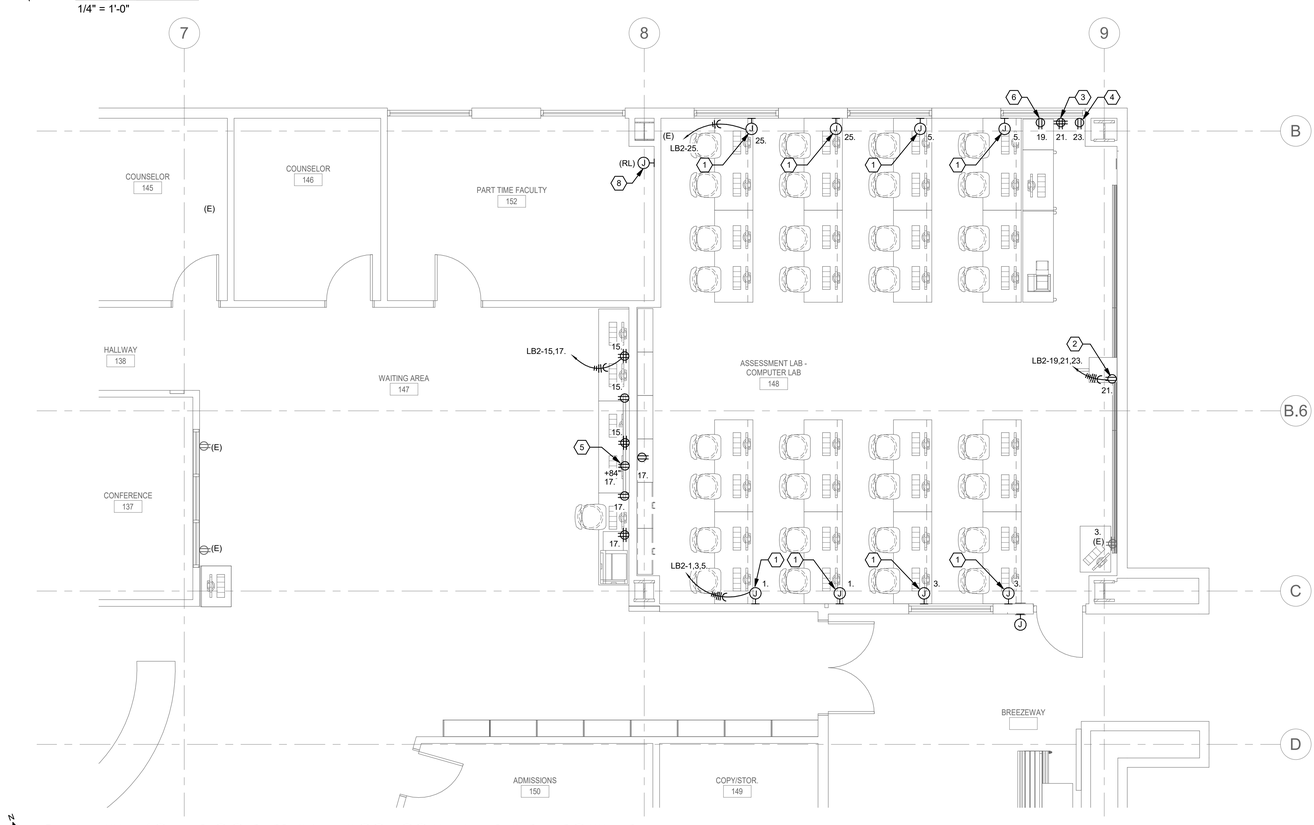

2 NEW - 1ST FLOOR PLAN - ASSESSMENT LAB - POWER

0' 2' 4' 8'

1/4" = 1'-0"

GENERAL SHEET NOTES

A. COORDINATE EXACT LOCATION AND MOUNTING HEIGHT OF RECEPTACLES AND ELECTRICAL DEVICES WITH ARCHITECT PRIOR TO INSTALLATION.

B. COORDINATE EXACT LOCATION AND POWER REQUIREMENTS OF HVAC UNITS WITH DIVISION 23 PRIOR TO INSTALLATION.

C. ALL RECEPTACLES, TEL/DATA OUTLETS, AND ELECTRICAL DEVICES DENOTED WITH AN (X) TO BE DISCONNECTED AND REMOVED. TERMINATE EXISTING CIRCUIT AND ASSOCIATED WIRING UP TO CEILING JUNCTION BOX FOR REUSE.

SHEET KEYNOTES

1. PROVIDE POWER CONNECTION FOR POWERED DESKS AND COMPUTERS.
2. PROVIDE DEDICATED RECEPTACLE FOR CEILING MOUNTED PROJECTOR.
3. PROVIDE RECEPTACLE FOR TEACHER'S STATION.
4. PROVIDE RECEPTACLE FOR AV BLACK BOX.
5. PROVIDE RECEPTACLE FOR FLATSCREEN TV.
6. PROVIDE RECEPTACLE FOR PRINTER STATION.
7. EXISTING JUNCTION BOX WITH FURNITURE WHIP TO BE RELOCATED. SEE NEW PLAN FOR NEW WORK.
8. NEW LOCATION OF RELOCATED FURNITURE WHIP. COORDINATE EXACT LOCATION AND REQUIREMENTS WITH ARCHITECT PRIOR TO COMMENCEMENT OF WORK.

NOLL & TAM ARCHITECTS

729 Heinz Avenue
Berkeley, CA 94710
tel 510.542.2200
fax 510.542.2201

ARCHITECTS SEAL

APPROVALS

FILE NUMBER: 07-C1

DIVISION OF THE STATE ARCHITECT

APP# 01-117630

ACS_____ FLS_____ SSS_____

Date:

PROJECT 2016-0538

CONTACT Hai Phan

INTERFACE ENGINEERING

135 Main Street
Suite 400
San Francisco, CA 94105
TEL 415.489.7240
FAX 415.489.7289
www.interfaceengineering.com

PROJECT TITLE

CONTRA COSTA CCD

D-4002

DVC SAN RAMON CAMPUS EXPANSION & RENOVATION

1690 Watermill Rd.
San Ramon, CA 94582

ISSUE TITLE

INCREMENT 1

ISSUE DATE	11/30/2018
NOLL & TAM JOB NUMBER	21630

REVISIONS

NO.	DATE	DESCRIPTION

SHEET TITLE

DEMO & NEW - 1ST FLOOR - WEST - ASSESSMENT LAB - POWER

SHEET NUMBER

E2.35.1

9/29/2021 2:46:36 PM

GENERAL SHEET NOTES

A. ALL EXISTING RECEPTACLES, TEL/DATA OUTLETS, AND ELECTRICAL DEVICES ARE EXISTING TO REMAIN UNLESS OTHERWISE NOTED.

SHEET KEYNOTES

1. INTERCEPT AND EXTEND NEARBY EXISTING RECEPTACLE CIRCUIT TO NEW RECEPTACLE COMPLETE AS REQUIRED TO PLACE INTO SERVICE.

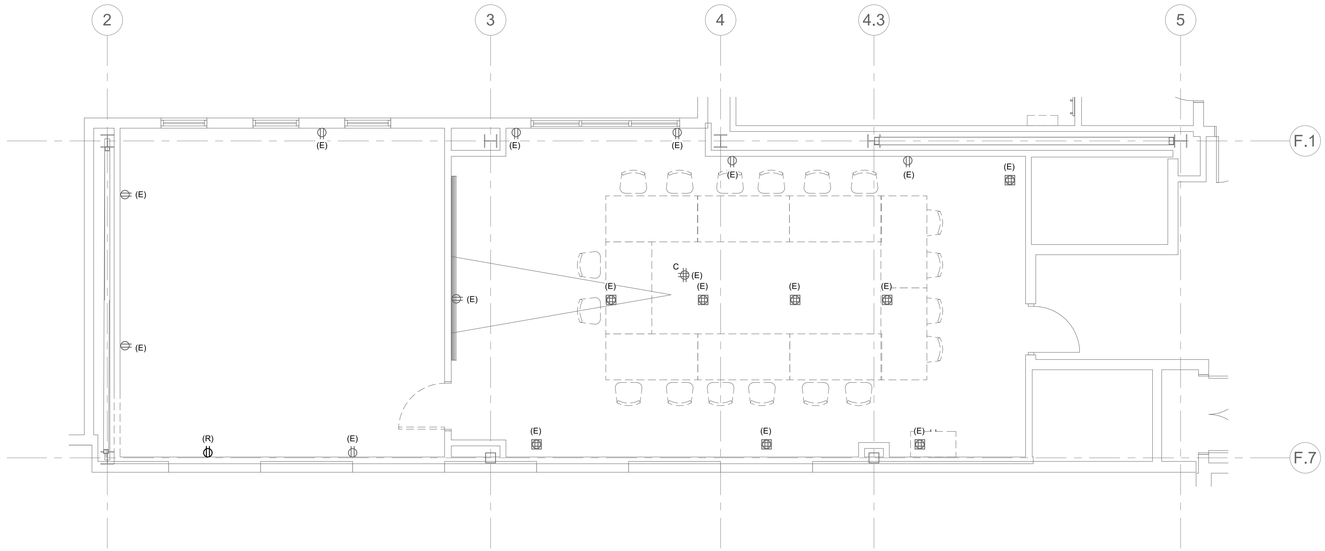

1 DEMO - 2ND FLOOR PLAN - CONFERENCE & STUDY ROOM - POWER

0' 2' 4' 8'
1/4" = 1'-0"

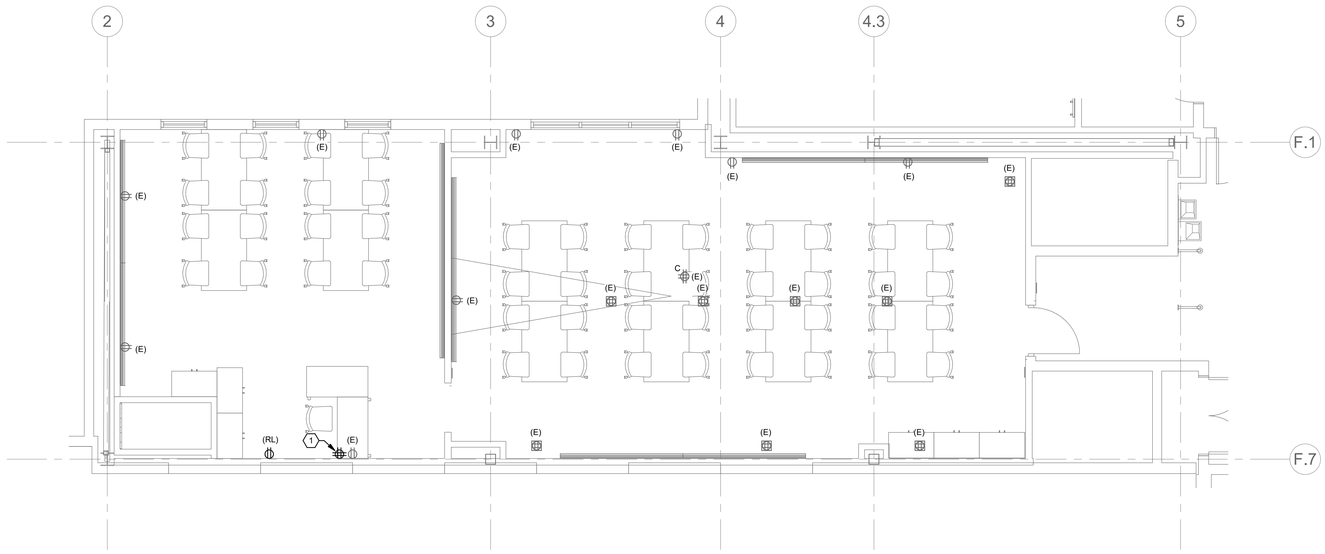

2 NEW - 2ND FLOOR PLAN - TEMPORARY TUTORIAL & STUDY ROOM - POWER

0' 2' 4' 8'
1/4" = 1'-0"

NOLL & TAM ARCHITECTS

729 Heinz Avenue
Berkeley, CA 94710
tel 510.542.2200
fax 510.542.2201

ARCHITECTS SEAL

APPROVALS

FILE NUMBER: 07-C1

DIVISION OF THE STATE ARCHITECT

APP# 01-117630

ACS_____ FLS_____ SSS_____

Date:

PROJECT 2016-0538

CONTACT Hai Phan

INTERFACE ENGINEERING

135 Main Street
Suite 400
San Francisco, CA 94105
TEL 415.489.7240
FAX 415.489.7289
www.interfaceengineering.com

PROJECT TITLE

CONTRA COSTA CCD
D-4002
DVC SAN RAMON CAMPUS EXPANSION & RENOVATION

1690 Watermill Rd.
San Ramon, CA 94582

ISSUE TITLE

INCREMENT 1

ISSUE DATE	11/30/2018
NOLL & TAM JOB NUMBER	21630

REVISIONS

NO.	DATE	DESCRIPTION

SHEET TITLE

DEMO & NEW - 2ND FLOOR - WEST - TEMP TUTORIAL & STUDY - POWER

SHEET NUMBER

E2.36.1

9/29/2021 2:46:38 PM

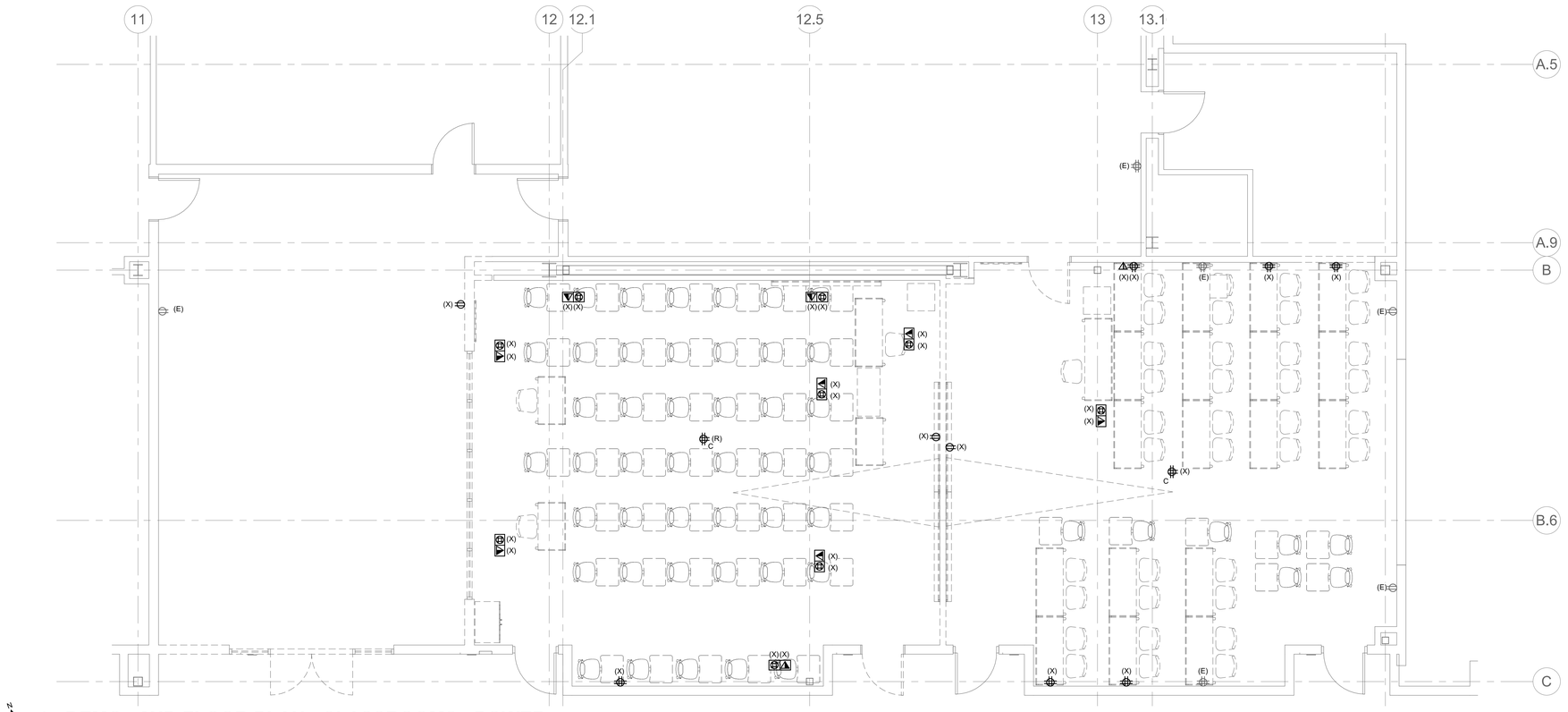

1 DEMO - 2ND FLOOR PLAN - CLASSROOMS - POWER

0' 2' 4' 8'

1/4" = 1'-0"

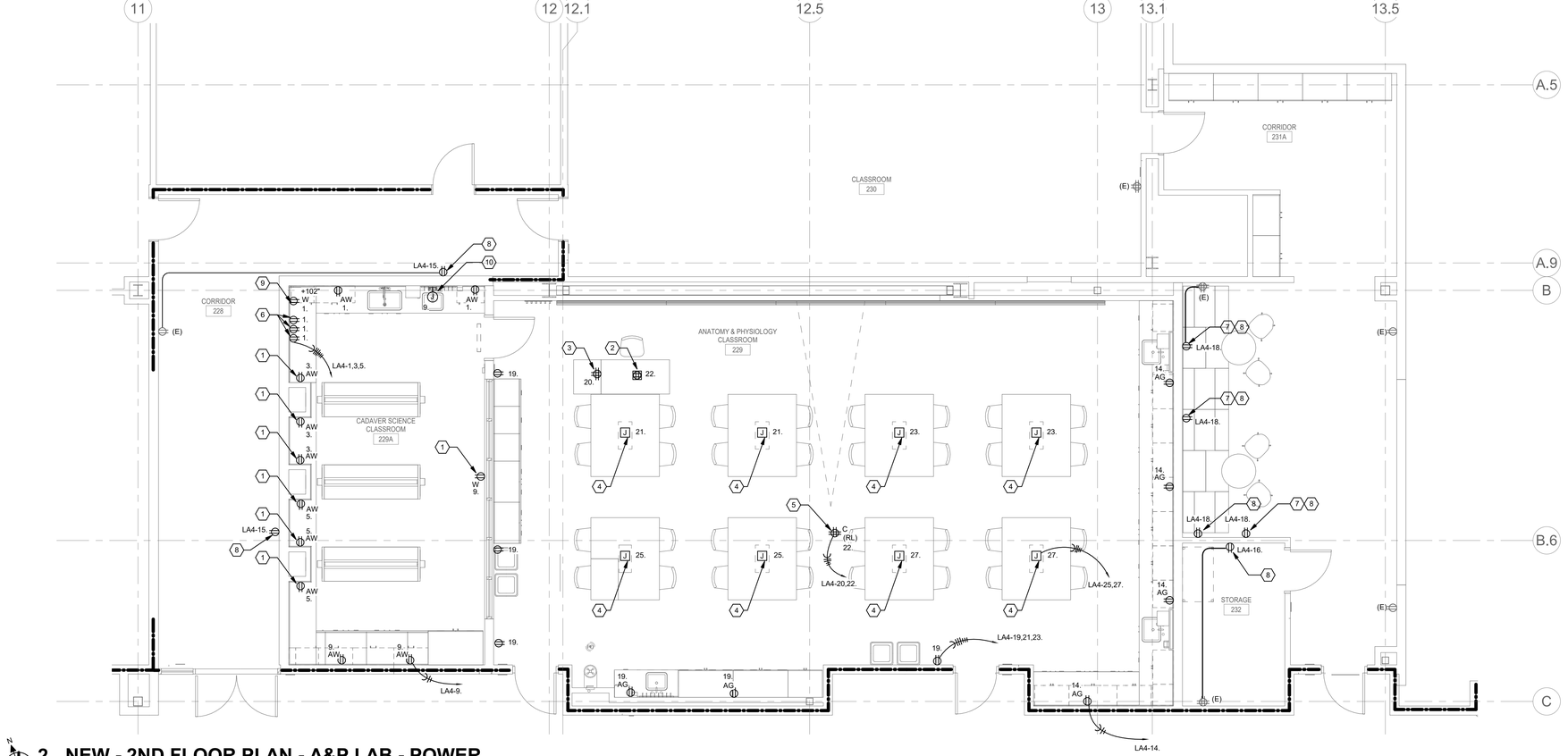

2 NEW - 2ND FLOOR PLAN - A&P LAB - POWER

0' 2' 4' 8'

1/4" = 1'-0"

9/29/2021 2:46:42 PM

GENERAL SHEET NOTES

A. COORDINATE EXACT LOCATION AND MOUNTING HEIGHT OF RECEPTACLES AND ELECTRICAL DEVICES WITH ARCHITECT PRIOR TO INSTALLATION.

B. COORDINATE EXACT LOCATION AND POWER REQUIREMENTS OF HVAC UNITS WITH DIVISION 23 PRIOR TO INSTALLATION.

C. ALL RECEPTACLES, TEL/DATA OUTLETS, AND ELECTRICAL DEVICES DENOTED WITH AN (X) TO BE DISCONNECTED AND REMOVED. TERMINATE EXISTING CIRCUIT AND ASSOCIATED WIRING UP TO CEILING JUNCTION BOX FOR REUSE.

SHEET KEYNOTES

1. PROVIDE WITH BELL WEATHERPROOF COVER.
2. PROVIDE RECEPTACLES FOR TEACHER'S STATION.
3. PROVIDE RECEPTACLES MOUNTED IN CASEWORK FOR AV BLACK BOX.
4. PROVIDE JUNCTION BOX FOR POWER CONNECTIONS TO TABLE MOUNTED RECEPTACLES.
5. PROVIDE RECEPTACLES FOR CEILING MOUNTED PROJECTOR.
6. PROVIDE RECEPTACLES FOR PLUG IN CAMERA POWER SUPPLY ABOVE CEILING AT +126" AFF.
7. PROVIDE RECEPTACLES FOR POWERED FURNITURE.
8. CONNECT TO EXISTING RECEPTACLE CIRCUIT AS INDICATED.
9. PROVIDE RECEPTACLE FOR WALL MOUNTED TV.
10. PROVIDE JUNCTION BOX BELOW COUNTER FOR POWER CONNETION TO TOUCHLESS FAUCET.

NOLL & TAM ARCHITECTS

729 Heinz Avenue
Berkeley, CA 94710
tel 510.542.2200
fax 510.542.2201

ARCHITECTS SEAL

APPROVALS

FILE NUMBER: 07-C1

DIVISION OF THE STATE ARCHITECT

APP# 01-117630

ACS_____ FLS_____ SSS_____

Date:

PROJECT 2016-0538

CONTACT Hai Phan

INTERFACE ENGINEERING

135 Main Street
Suite 400
San Francisco, CA 94105
TEL 415.489.7240
FAX 415.489.7289
www.interfaceengineering.com

PROJECT TITLE

CONTRA COSTA CCD

D-4002
DVC SAN RAMON CAMPUS EXPANSION & RENOVATION

1690 Watermill Rd.
San Ramon, CA 94582

ISSUE TITLE

INCREMENT 1

ISSUE DATE	11/30/2018
NOLL & TAM JOB NUMBER	21630

REVISIONS

#	DATE	DESCRIPTION

SHEET TITLE

DEMO & NEW - 2ND FLOOR - EAST - A&P LAB - POWER

SHEET NUMBER

E2.37.1

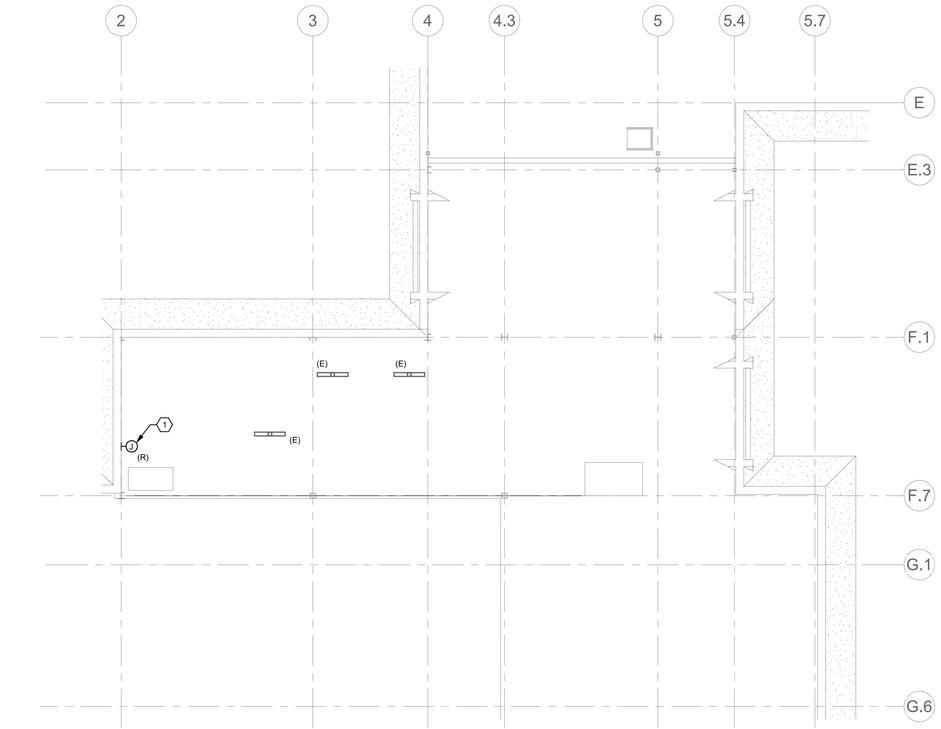

1 PARTIAL ATTIC DEMO PLAN - WEST- ELECTRICAL

0' 4' 8' 16'

1/8" = 1'-0"

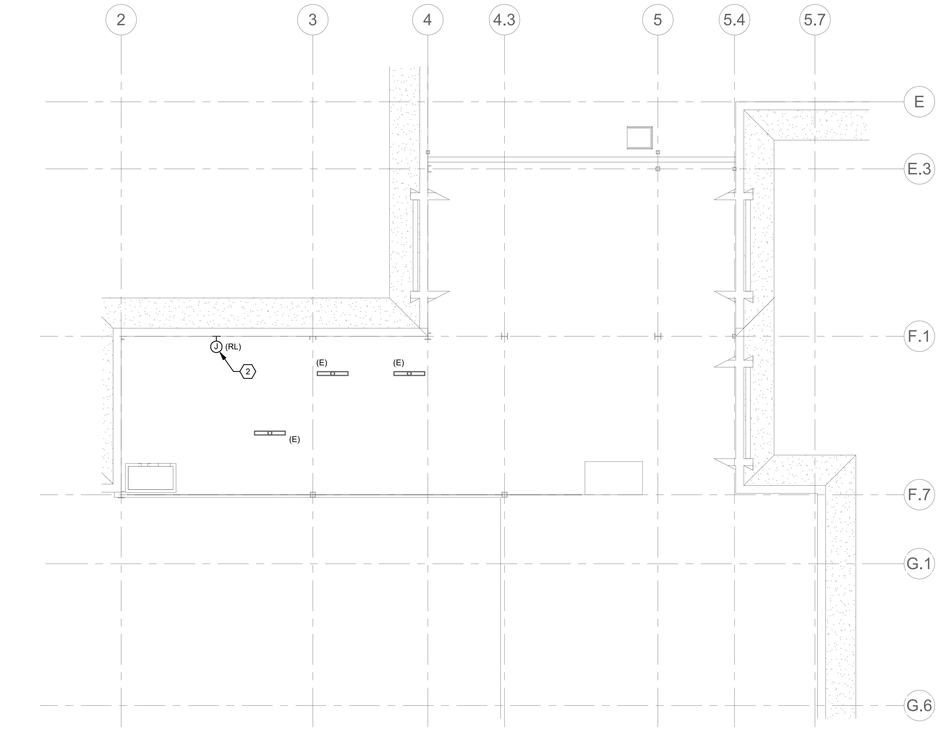

2 PARTIAL ATTIC PLAN - WEST- ELECTRICAL

0' 4' 8' 16'

1/8" = 1'-0"

SHEET KEYNOTES

1. EXISTING JUNCTION BOX TO BE RELOCATED. DISCONNECT CONDUITS AND WIRING. SEE NEW PLAN FOR WORK.
2. NEW LOCATION OF RELOCATED JUNCTION BOX. INTERCEPT AND EXTEND ALL ASSOCIATED WIRING COMPLETE AS REQUIRED TO PLACE BACK INTO SERVICE. COORDINATE FINAL LOCATION AND ROUTING WITH ARCHITECT AND INCREMENT 2 PRIOR TO COMMENCEMENT OF WORK.

NOLL & TAM ARCHITECTS

729 Heinz Avenue
Berkeley, CA 94710
tel 510.542.2200
fax 510.542.2201

ARCHITECTS SEAL

APPROVALS

FILE NUMBER: 07-C1

DIVISION OF THE STATE ARCHITECT

APP# 01-117630

ACS_____ FLS_____ SSS_____

Date:

PROJECT 2016-0538

CONTACT Hai Phan

INTERFACE ENGINEERING

135 Main Street
Suite 400
San Francisco, CA 94105
TEL 415.489.7240
FAX 415.489.7289
www.interfaceengineering.com

PROJECT TITLE

CONTRA COSTA CCD

D-4002

DVC SAN RAMON CAMPUS EXPANSION & RENOVATION

1690 Watermill Rd.
San Ramon, CA 94582

ISSUE TITLE

INCREMENT 1

ISSUE DATE	11/30/2018
NOLL & TAM JOB NUMBER	21630

REVISIONS

NO.	DATE	DESCRIPTION

SHEET TITLE

DEMO & NEW - ATTIC FLOOR PLAN WEST - POWER

SHEET NUMBER

E2.38.1

9/29/2021 2:46:44 PM

GENERAL SHEET NOTES

A. COORDINATE EXACT LOCATION AND MOUNTING HEIGHT OF LUMINAIRES AND LIGHTING CONTROLS WITH ARCHITECT PRIOR TO INSTALLATION.

B. ALL LUMINAIRES AND LIGHTING CONTROLS DENOTED WITH AN (X) TO BE DISCONNECTED AND REMOVED. TERMINATE EXISTING CIRCUIT AND ASSOCIATED WIRING UP TO CEILING JUNCTION BOX FOR REUSE.

SHEET KEYNOTES

1. LUMINAIRES AND LIGHTING CONTROLS IN ROOM ARE EXISTING TO REMAIN.
2. CONNECT TO NEARBY EXISTING LIGHTING CIRCUIT AS INDICATED.
3. 14 FEET LONG FIXED RAILS, AS PART OF THE "THREE SCISSOR LIGHT MOVER RAIL SYSTEM", MOUNT RAILS TO SUSPENDED CEILING PER MANUFACTURER'S INSTRUCTIONS. THE TOTAL WEIGHT OF THE SYSTEM IS LESS THAN 5 POUNDS PER FOOT.
4. 10 FEET LONG FLOATING SLIDING RAILS, AS PART OF THE "THREE SCISSOR LIGHT MOVER RAIL SYSTEM", MOUNT FLOATING SLIDING RAILS TO THE FIXED RAILS PER MANUFACTURER'S INSTRUCTIONS. THE TOTAL WEIGHT OF THE SYSTEM IS LESS THAN 5 POUNDS PER FOOT.

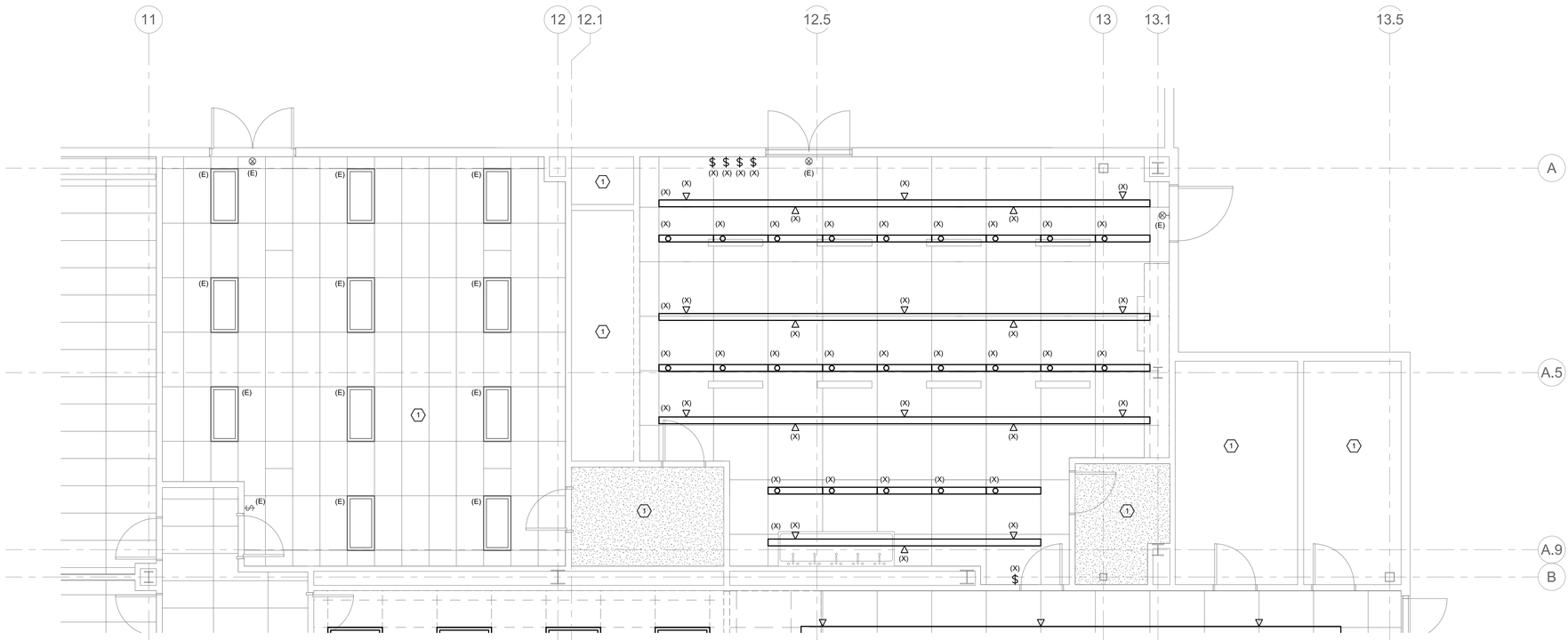

1 DEMO - 1ST FLOOR PLAN - CLASSROOM - PAINTING STUDIO - LIGHTING

0' 2' 4' 8'
1/4" = 1'-0"

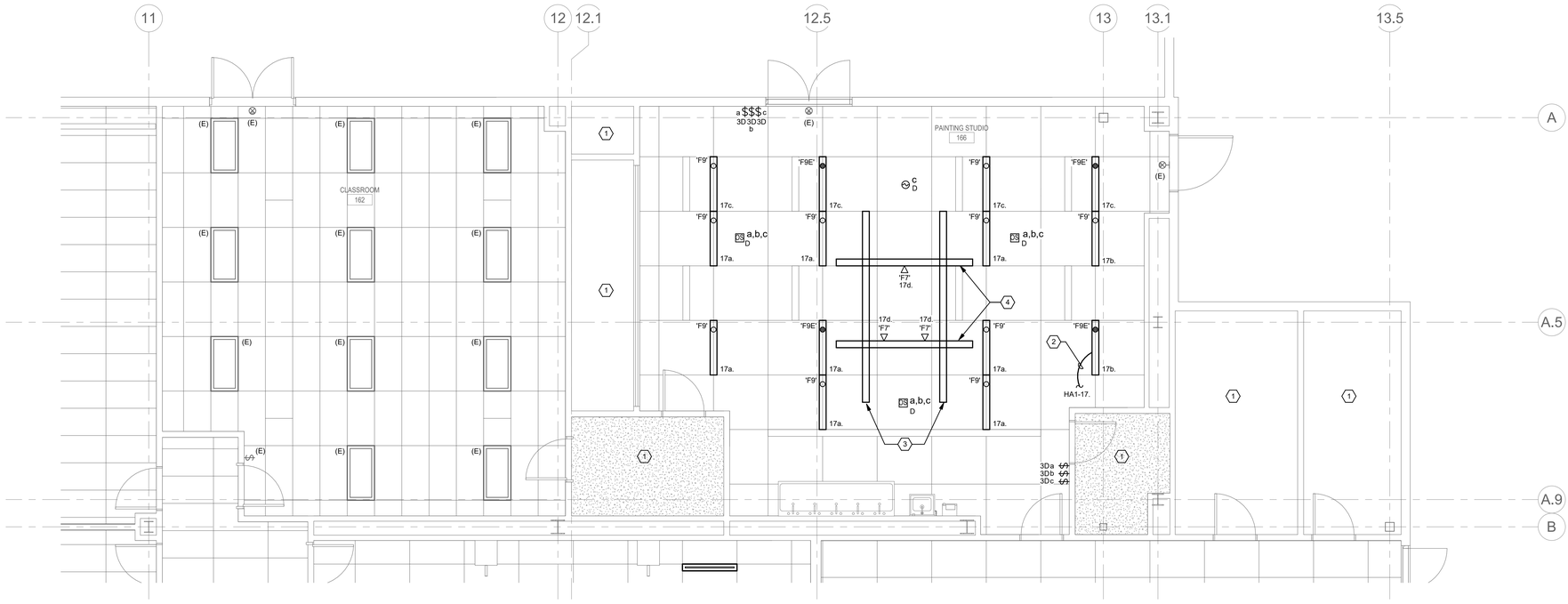

2 NEW - 1ST FLOOR PLAN - CLASSROOM - PAINTING STUDIO - LIGHTING

0' 2' 4' 8'
1/4" = 1'-0"

9/29/2021 2:46:46 PM

NOLL & TAM ARCHITECTS

729 Heinz Avenue
Berkeley, CA 94710
tel 510.542.2200
fax 510.542.2201

ARCHITECTS SEAL

APPROVALS

FILE NUMBER: 07-C1

DIVISION OF THE STATE ARCHITECT

APP# 01-117630

ACS_____ FLS_____ SSS_____

Date:

PROJECT 2016-0538

CONTACT Hai Phan

INTERFACE ENGINEERING

135 Main Street
Suite 400
San Francisco, CA 94105
TEL 415.489.7240
FAX 415.489.7289
www.interfaceengineering.com

PROJECT TITLE

CONTRA COSTA CCD
D-4002
DVC SAN RAMON CAMPUS EXPANSION & RENOVATION

1690 Watermill Rd.
San Ramon, CA 94582

ISSUE TITLE

INCREMENT 1

ISSUE DATE	11/30/2018
NOLL & TAM JOB NUMBER	21630

REVISIONS

NO.	DATE	DESCRIPTION

SHEET TITLE

DEMO & NEW - 1ST FLOOR - EAST - CLASSROOM - PAINTING STUDIO - LIGHTING

SHEET NUMBER

E2.42.1

GENERAL SHEET NOTES

A. COORDINATE EXACT LOCATION AND MOUNTING HEIGHT OF LUMINAIRES AND LIGHTING CONTROLS WITH ARCHITECT PRIOR TO INSTALLATION.

B. ALL LUMINAIRES AND LIGHTING CONTROLS DENOTED WITH AN (X) TO BE DISCONNECTED AND REMOVED. TERMINATE EXISTING CIRCUIT AND ASSOCIATED WIRING UP TO CEILING JUNCTION BOX FOR REUSE.

SHEET KEYNOTES

1. CONNECT TO NEARBY EXISTING LIGHTING CIRCUIT AS INDICATED.

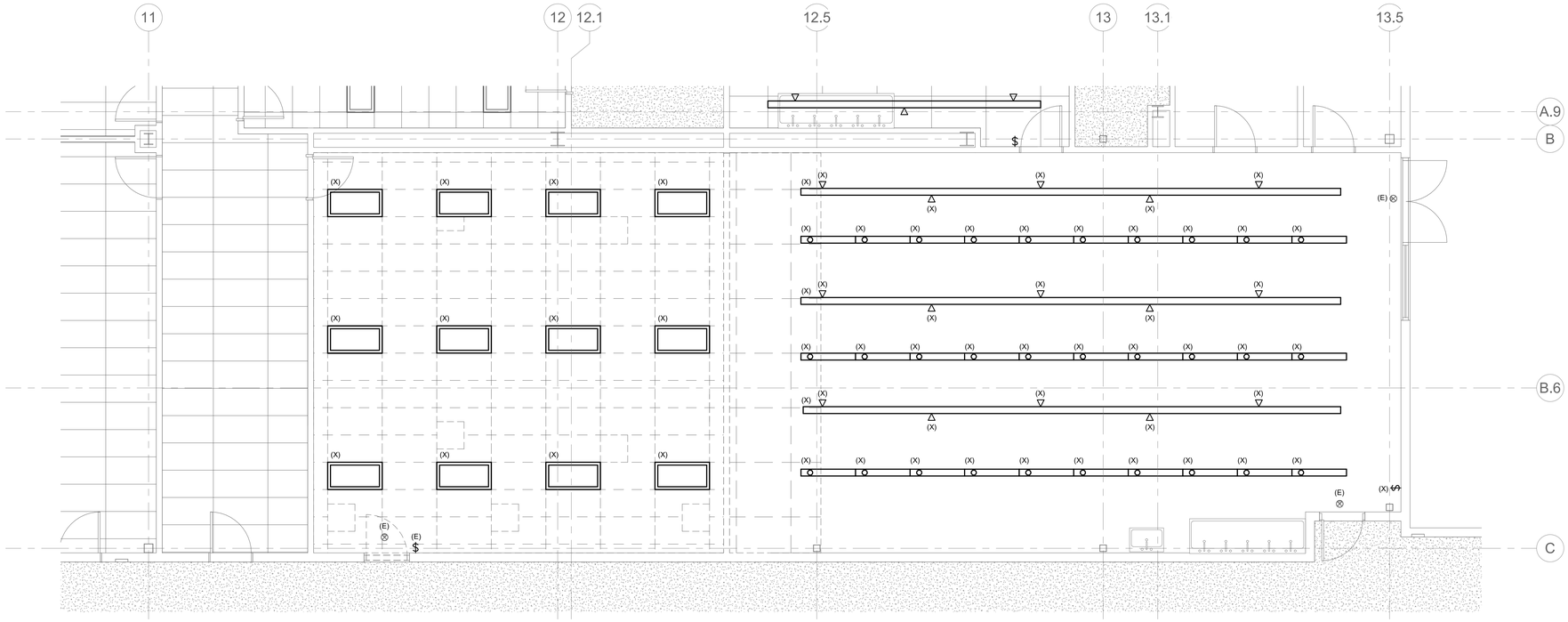

1 DEMO - 1ST FLOOR PLAN - CLASSROOM - CERAMIC STUDIO - LIGHTING

0' 2' 4' 8'
1/4" = 1'-0"

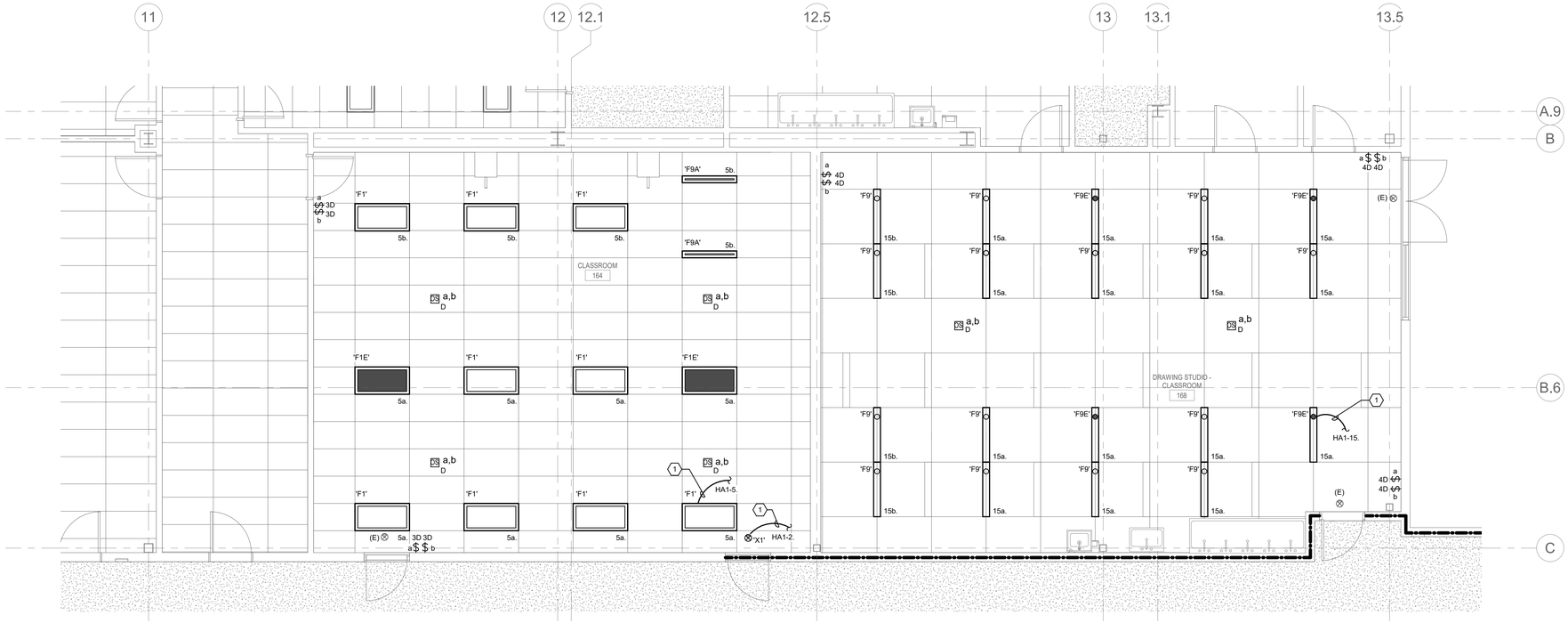

2 NEW - 1ST FLOOR PLAN - CLASSROOM - DRAWING STUDIO - LIGHTING

0' 2' 4' 8'
1/4" = 1'-0"

9/29/2021 2:46:49 PM

NOLL & TAM ARCHITECTS

729 Heinz Avenue
Berkeley, CA 94710
tel 510.542.2200
fax 510.542.2201

ARCHITECTS SEAL

APPROVALS

FILE NUMBER: 07-C1

DIVISION OF THE STATE ARCHITECT

APP# 01-117630

ACS_____ FLS_____ SSS_____

Date:

PROJECT 2016-0538

CONTACT Hai Phan

INTERFACE ENGINEERING

135 Main Street
Suite 400
San Francisco, CA 94105
TEL 415.489.7240
FAX 415.489.7289
www.interfaceengineering.com

PROJECT TITLE

CONTRA COSTA CCD
D-4002
DVC SAN RAMON CAMPUS EXPANSION & RENOVATION

1690 Watermill Rd.
San Ramon, CA 94582

ISSUE TITLE

INCREMENT 1

ISSUE DATE	11/30/2018
NOLL & TAM JOB NUMBER	21630

REVISIONS

NO.	DATE	DESCRIPTION

SHEET TITLE

DEMO & NEW - 1ST FLOOR - EAST - CLASSROOM - DRAWING STUDIO - LIGHTING

SHEET NUMBER

E2.43.1

GENERAL SHEET NOTES

A. COORDINATE EXACT LOCATION AND MOUNTING HEIGHT OF LUMINAIRES AND LIGHTING CONTROLS WITH ARCHITECT PRIOR TO INSTALLATION.

B. ALL LUMINAIRES AND LIGHTING CONTROLS DENOTED WITH AN (X) TO BE DISCONNECTED AND REMOVED. TERMINATE EXISTING CIRCUIT AND ASSOCIATED WIRING UP TO CEILING JUNCTION BOX FOR REUSE.

SHEET KEYNOTES

1. PROVIDE TAPE LIGHT ABOVE CASEWORK.
2. CONNECT TO NEARBY EXISTING LIGHTING CIRCUIT AS INDICATED.
3. PROVIDE EXTERIOR PHOTO SENSOR FOR CONTROL OF EXTERIOR LUMINAIRE.

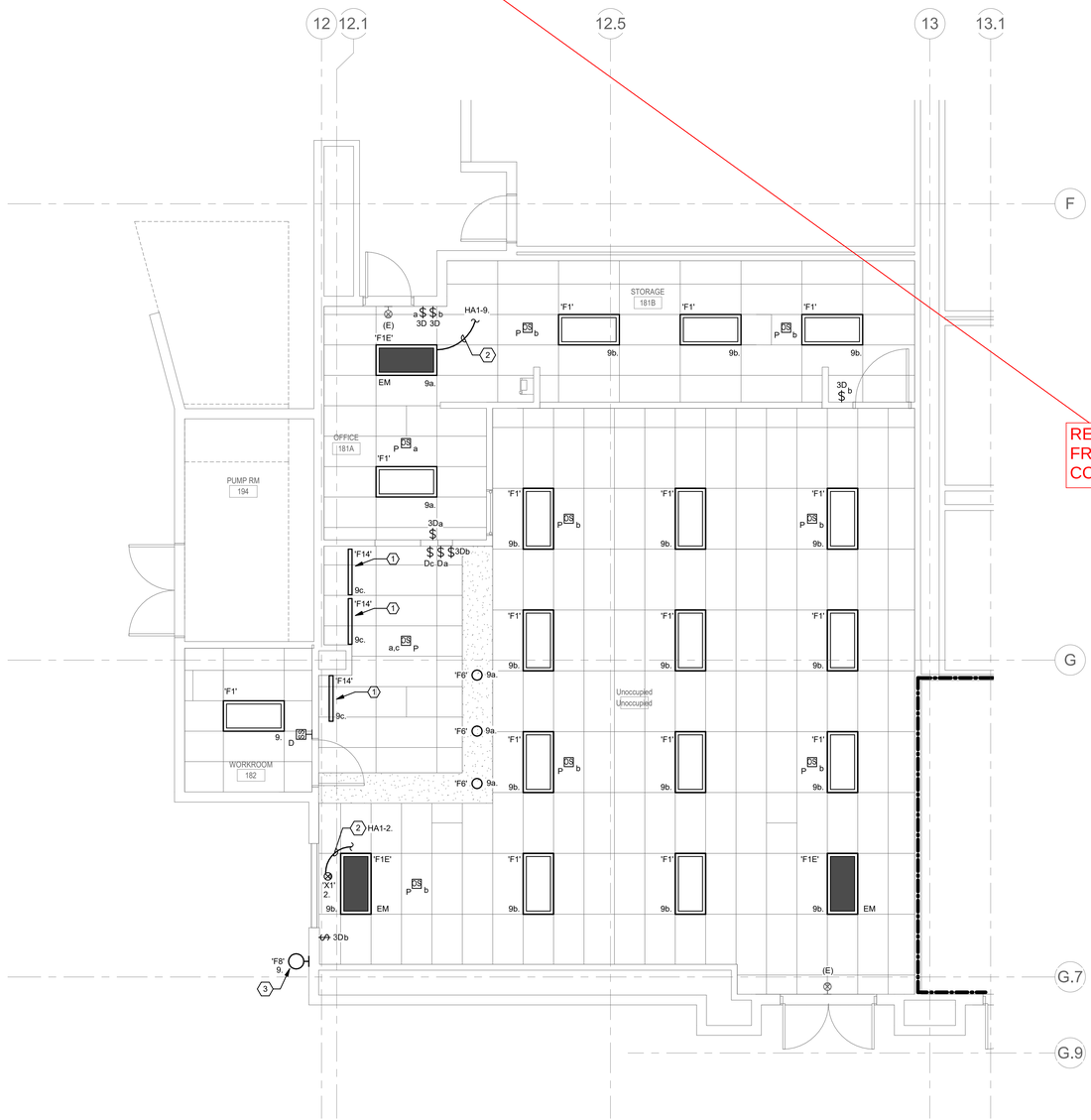

2 NEW - 1ST FLOOR PLAN - BOOKSTORE - LIGHTING

1/4" = 1'-0"

REMOVED FROM SCOPE CCDA-8

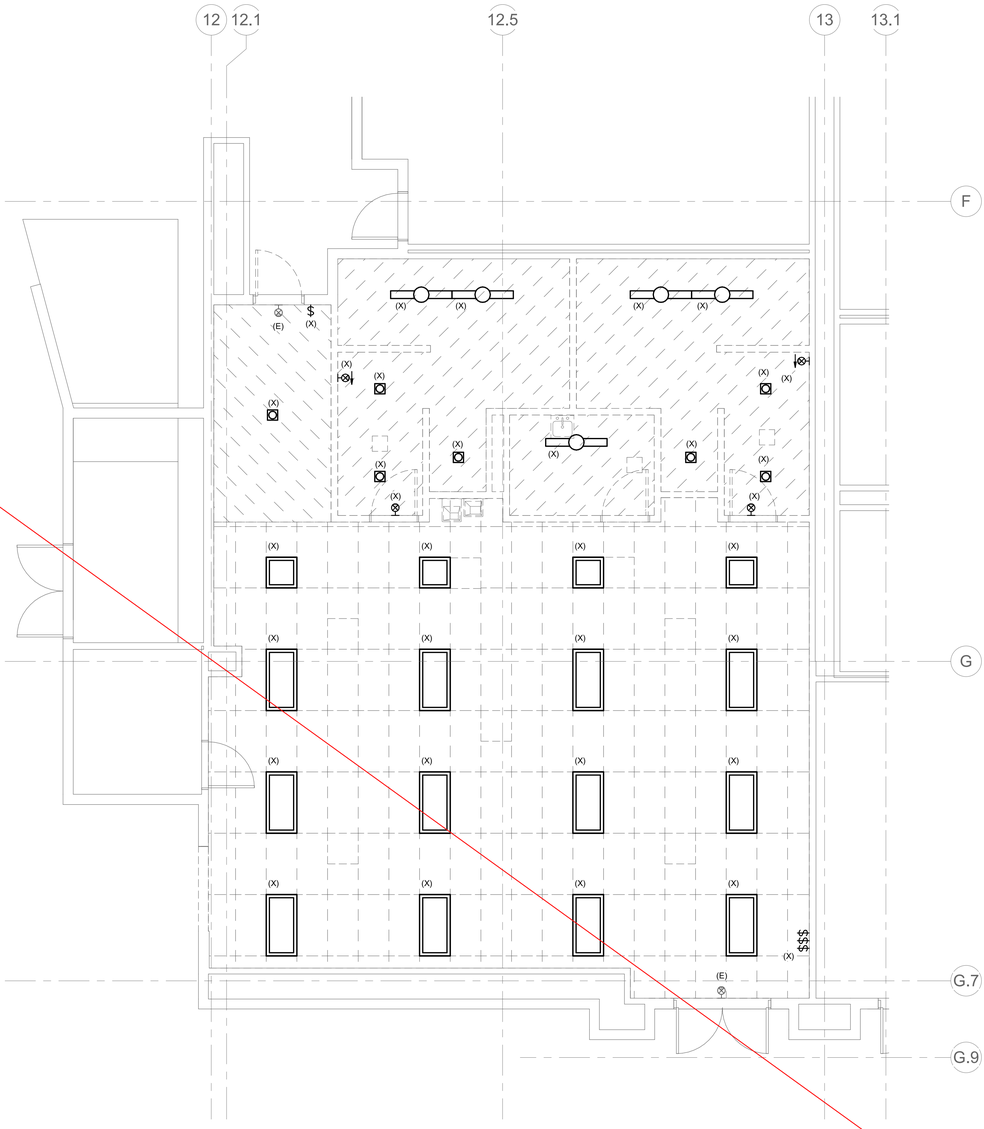

1 DEMO - 1ST FLOOR PLAN - MS TUTORIAL - LIGHTING

1/4" = 1'-0"

NOLL & TAM ARCHITECTS

729 Heinz Avenue
Berkeley, CA 94710
tel 510.542.2200
fax 510.542.2201

ARCHITECTS SEAL

APPROVALS

FILE NUMBER: 07-C1

DIVISION OF THE STATE ARCHITECT

APP# 01-117630

ACS_____ FLS_____ SSS_____

Date:

PROJECT 2016-0538

CONTACT Hai Phan

INTERFACE ENGINEERING

135 Main Street
Suite 400
San Francisco, CA 94105
TEL 415.489.7240
FAX 415.489.7289
www.interfaceengineering.com

PROJECT TITLE

CONTRA COSTA CCD
D-4002
DVC SAN RAMON CAMPUS EXPANSION & RENOVATION

1690 Watermill Rd.
San Ramon, CA 94582

ISSUE TITLE

INCREMENT 1

ISSUE DATE	11/30/2018
NOLL & TAM JOB NUMBER	21630

REVISIONS

NO.	DATE	DESCRIPTION

SHEET TITLE

DEMO & NEW - 1ST FLOOR - EAST - BOOKSTORE - LIGHTING

SHEET NUMBER

E2.44.1

9/29/2021 2:46:52 PM

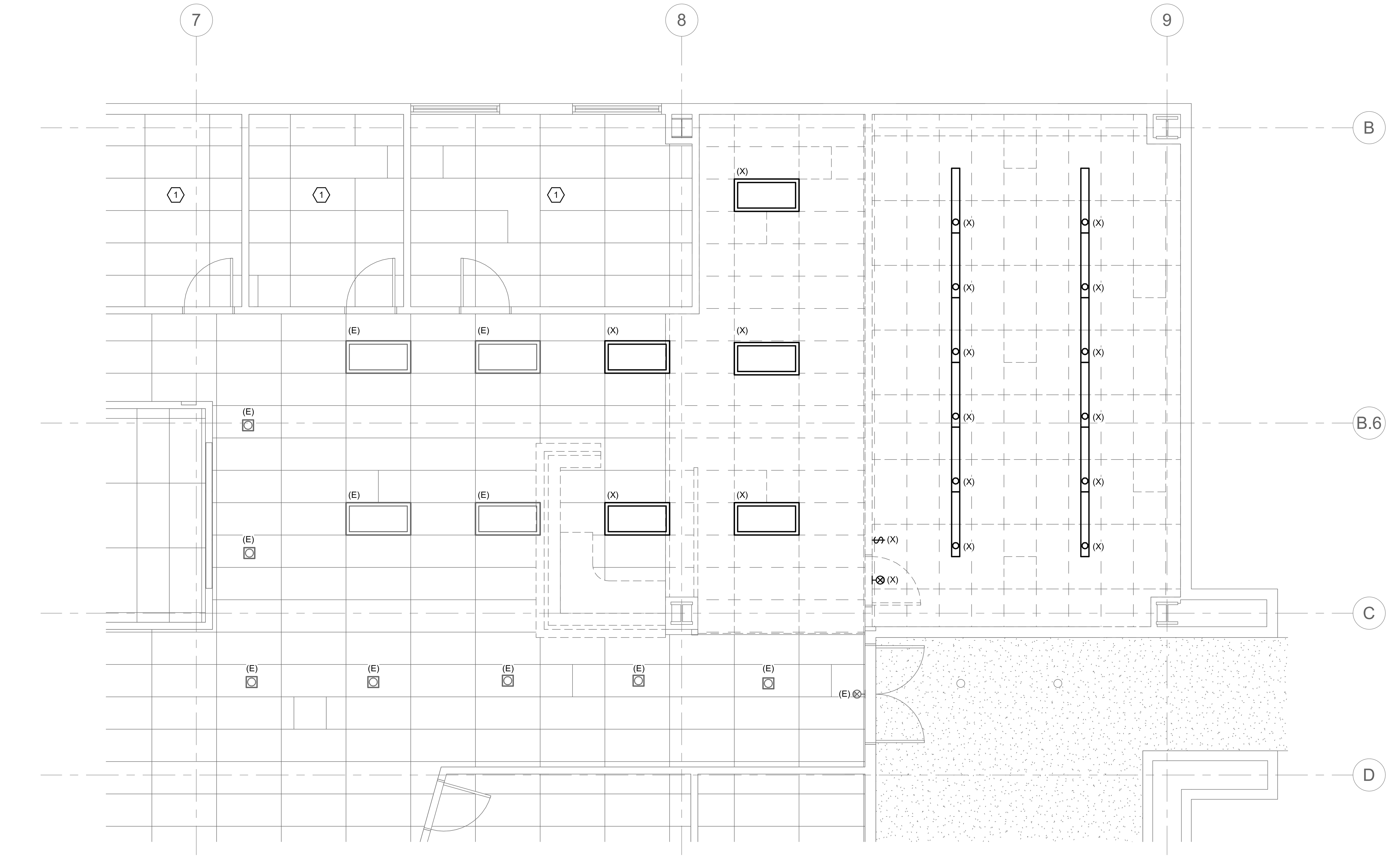

1 DEMO - 1ST FLOOR PLAN - WRITING TUTORIAL - LIGHTING

0' 2' 4' 8'
1/4" = 1'-0"

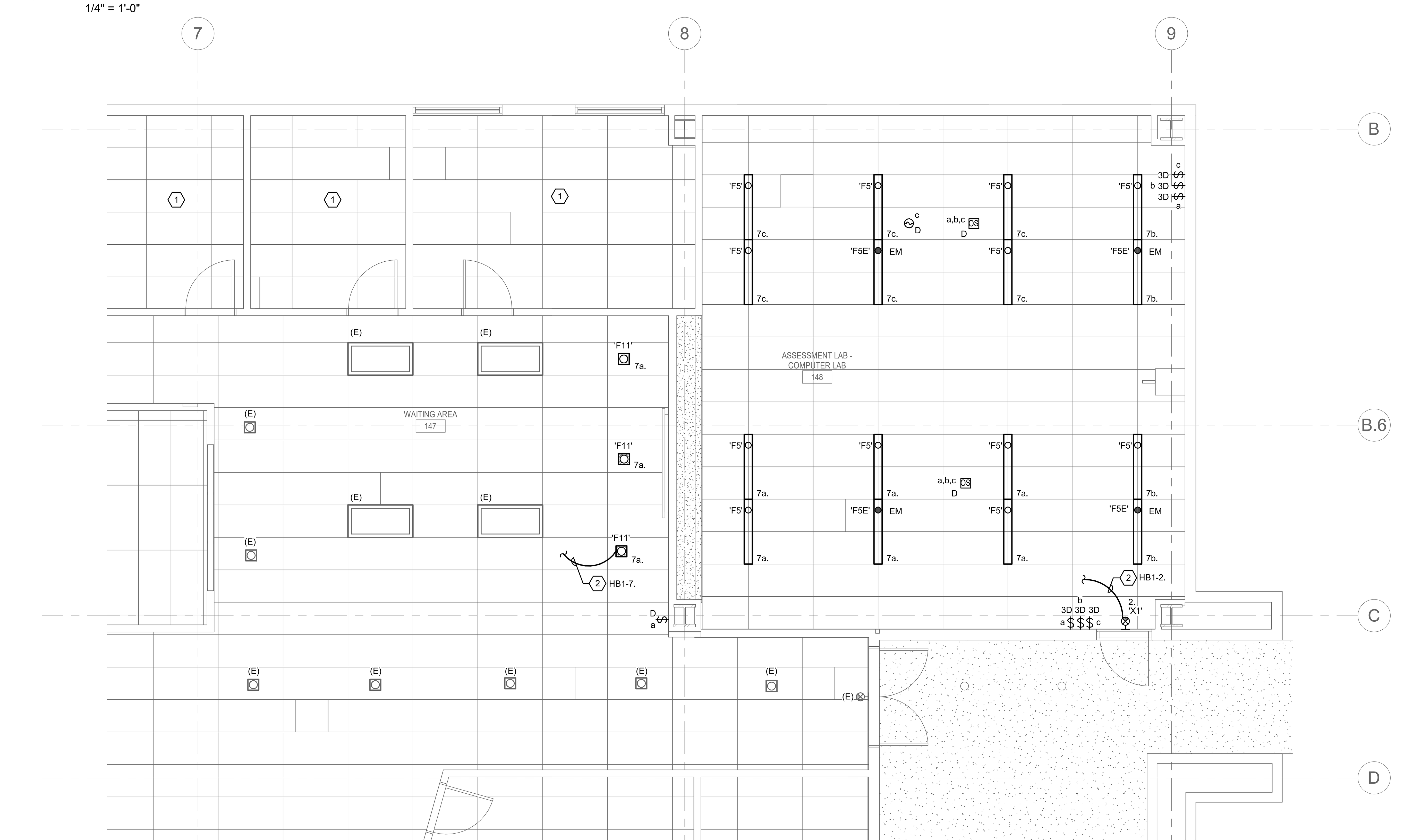

2 NEW - 1ST FLOOR PLAN - ASSESSMENT LAB - LIGHTING

0' 4' 8' 16'
1/4" = 1'-0"

GENERAL SHEET NOTES

A. COORDINATE EXACT LOCATION AND MOUNTING HEIGHT OF LUMINAIRES AND LIGHTING CONTROLS WITH ARCHITECT PRIOR TO INSTALLATION.

B. ALL LUMINAIRES AND LIGHTING CONTROLS DENOTED WITH AN (X) TO BE DISCONNECTED AND REMOVED. TERMINATE EXISTING CIRCUIT AND ASSOCIATED WIRING UP TO CEILING JUNCTION BOX FOR REUSE.

SHEET KEYNOTES

1. LUMINAIRES AND LIGHTING CONTROLS IN ROOM ARE EXISTING TO REMAIN.
2. CONNECT TO NEARBY EXISTING LIGHTING CIRCUIT AS INDICATED.

NOLL & TAM ARCHITECTS
729 Heinz Avenue
Berkeley, CA 94710
tel 510.542.2200
fax 510.542.2201

ARCHITECTS SEAL

APPROVALS
FILE NUMBER: 07-C1
DIVISION OF THE STATE ARCHITECT
APP# 01-117630
ACS________FLS________SSS________
Date:

PROJECT 2016-0538
CONTACT Hai Phan
INTERFACE ENGINEERING
135 Main Street
Suite 400
San Francisco, CA 94105
TEL 415.489.7240
FAX 415.489.7289
www.interfaceengineering.com

PROJECT TITLE
CONTRA COSTA CCD
D-4002
DVC SAN RAMON CAMPUS EXPANSION & RENOVATION

1690 Watermill Rd.
San Ramon, CA 94582

ISSUE TITLE
INCREMENT 1

ISSUE DATE	11/30/2018
NOLL & TAM JOB NUMBER	21630

REVISIONS

NO.	DATE	DESCRIPTION

SHEET TITLE
DEMO & NEW - 1ST FLOOR - WEST - ASSESSMENT LAB - LIGHTING

SHEET NUMBER
E2.45.1

9/29/2021 2:46:55 PM

GENERAL SHEET NOTES

A. COORDINATE EXACT LOCATION AND MOUNTING HEIGHT OF LUMINAIRES AND LIGHTING CONTROLS WITH ARCHITECT PRIOR TO INSTALLATION.

B. ALL LUMINAIRES AND LIGHTING CONTROLS DENOTED WITH AN (X) TO BE DISCONNECTED AND REMOVED. TERMINATE EXISTING CIRCUIT AND ASSOCIATED WIRING UP TO CEILING JUNCTION BOX FOR REUSE.

SHEET KEYNOTES

1. EXISTING LUMINAIRE TO BE DISCONNECTED AND TO BE RELOCATED. EXISTING LIGHTING CIRCUIT TO BE DISCONNECTED AND RECONNECTED TO NEW LOCATION.

2. NEW LOCATION OF RELOCATED LUMINAIRE. RE-CONNECT COMPLETE AS REQUIRED TO PLACE BACK INTO SERVICE.

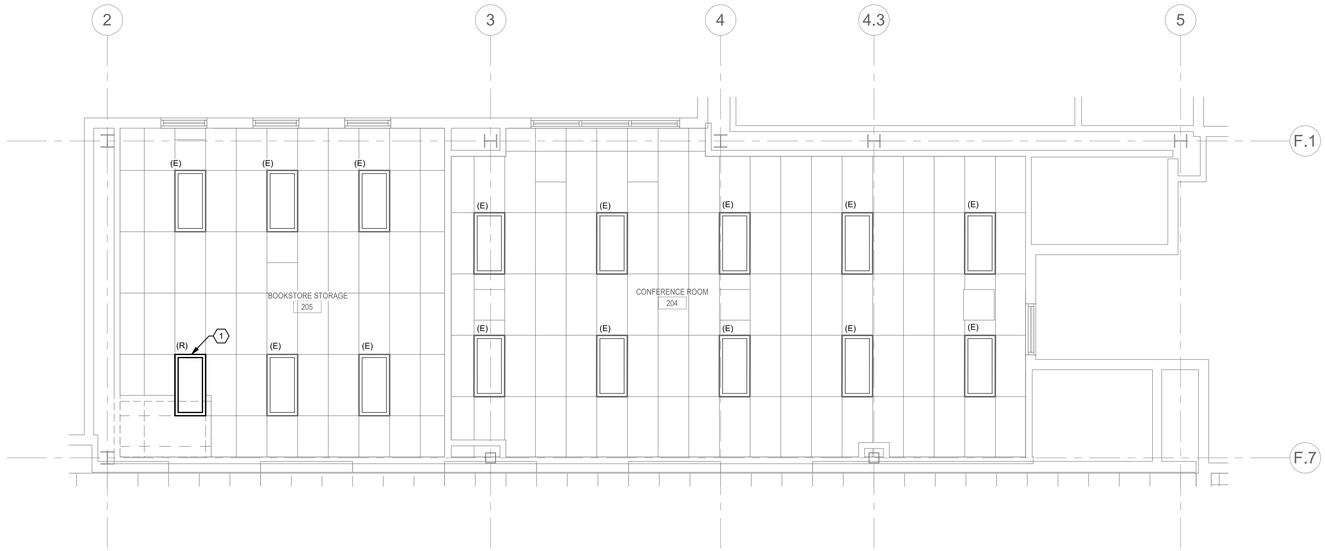

1 DEMO - 2ND FLOOR PLAN - CONFERENCE & STORAGE ROOM - LIGHTING

0' 2' 4' 8'
1/4" = 1'-0"

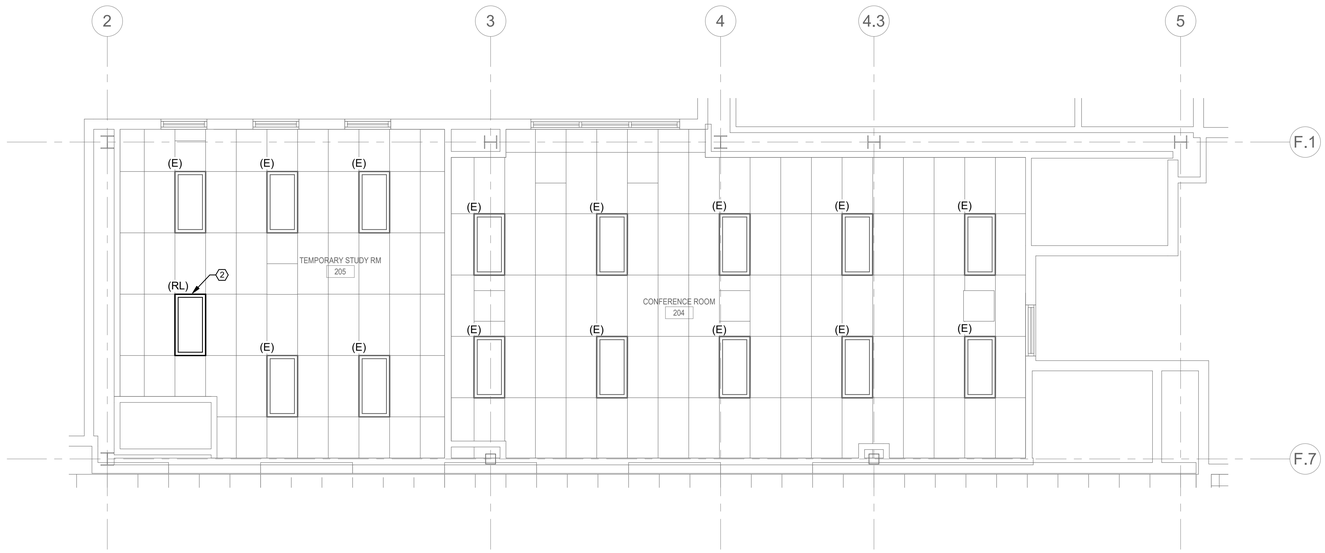

2 NEW - 2ND FLOOR PLAN - TEMPORARY TUTORIAL & STUDY ROOM - LIGHTING

0' 2' 4' 8'
1/4" = 1'-0"

9/29/2021 2:46:57 PM

NOLL & TAM ARCHITECTS

729 Heinz Avenue
Berkeley, CA 94710
tel 510.542.2200
fax 510.542.2201

ARCHITECTS SEAL

APPROVALS

FILE NUMBER: 07-C1

DIVISION OF THE STATE ARCHITECT

APP# 01-117630

ACS_____ FLS_____ SSS_____

Date:

PROJECT 2016-0538

CONTACT Hai Phan

INTERFACE ENGINEERING

135 Main Street
Suite 400
San Francisco, CA 94105
TEL 415.489.7240
FAX 415.489.7289
www.interfaceengineering.com

PROJECT TITLE

CONTRA COSTA CCD
D-4002
DVC SAN RAMON CAMPUS EXPANSION & RENOVATION

1690 Watermill Rd.
San Ramon, CA 94582

ISSUE TITLE

INCREMENT 1

ISSUE DATE	11/30/2018
NOLL & TAM JOB NUMBER	21630

REVISIONS

NO.	DATE	DESCRIPTION

SHEET TITLE

DEMO & NEW - 2ND FLOOR - WEST - TEMP TUTORIAL & STUDY - LIGHTING

SHEET NUMBER

E2.46.1

GENERAL SHEET NOTES

A. ALL LUMINAIRES AND LIGHTING CONTROLS DENOTED WITH AN (X) TO BE DISCONNECTED AND REMOVED. TERMINATE EXISTING CIRCUIT AND ASSOCIATED WIRING UP TO CEILING JUNCTION BOX FOR REUSE.

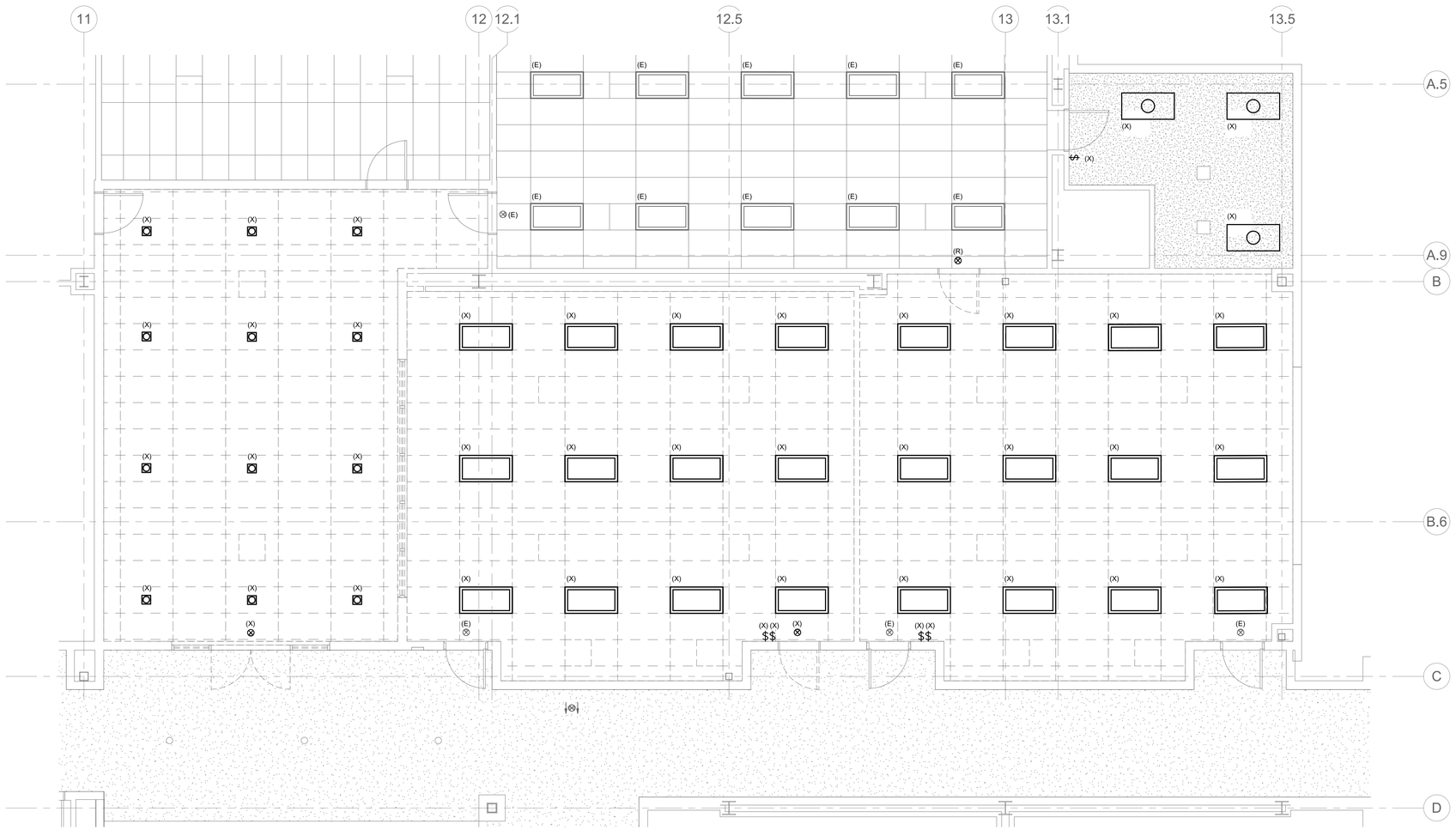

1 DEMO - 2ND FLOOR PLAN - CLASSROOMS - LIGHTING

0' 2' 4' 8'

1/4" = 1'-0"

9/29/2021 2:46:59 PM

NOLL & TAM ARCHITECTS

729 Heinz Avenue
Berkeley, CA 94710
tel 510.542.2200
fax 510.542.2201

ARCHITECTS SEAL

APPROVALS

FILE NUMBER: 07-C1

DIVISION OF THE STATE ARCHITECT

APP# 01-117630

ACS_____ FLS_____ SSS_____

Date:

PROJECT 2016-0538

CONTACT Hai Phan

INTERFACE ENGINEERING

135 Main Street
Suite 400
San Francisco, CA 94105
TEL 415.489.7240
FAX 415.489.7289
www.interfaceengineering.com

PROJECT TITLE

CONTRA COSTA CCD

D-4002
DVC SAN RAMON CAMPUS EXPANSION & RENOVATION

1690 Watermill Rd.
San Ramon, CA 94582

ISSUE TITLE

INCREMENT 1

ISSUE DATE	11/30/2018
NOLL & TAM JOB NUMBER	21630

REVISIONS

NO.	DATE	DESCRIPTION

SHEET TITLE

DEMO - 2ND FLOOR - EAST - A&P LAB - LIGHTING

SHEET NUMBER

E2.47A.1

GENERAL SHEET NOTES

A. COORDINATE EXACT LOCATION AND MOUNTING HEIGHT OF LUMINAIRES AND LIGHTING CONTROLS WITH ARCHITECT PRIOR TO INSTALLATION.

SHEET KEYNOTES

1. PROVIDE WEATHERPROOF SWITCH COVER. MANUFACTURER: PASS & SEYMOUR 4516 OR APPROVED EQUIVALENT.
2. CONNECT TO NEARBY EXISTING LIGHTING CIRCUIT AS INDICATED.

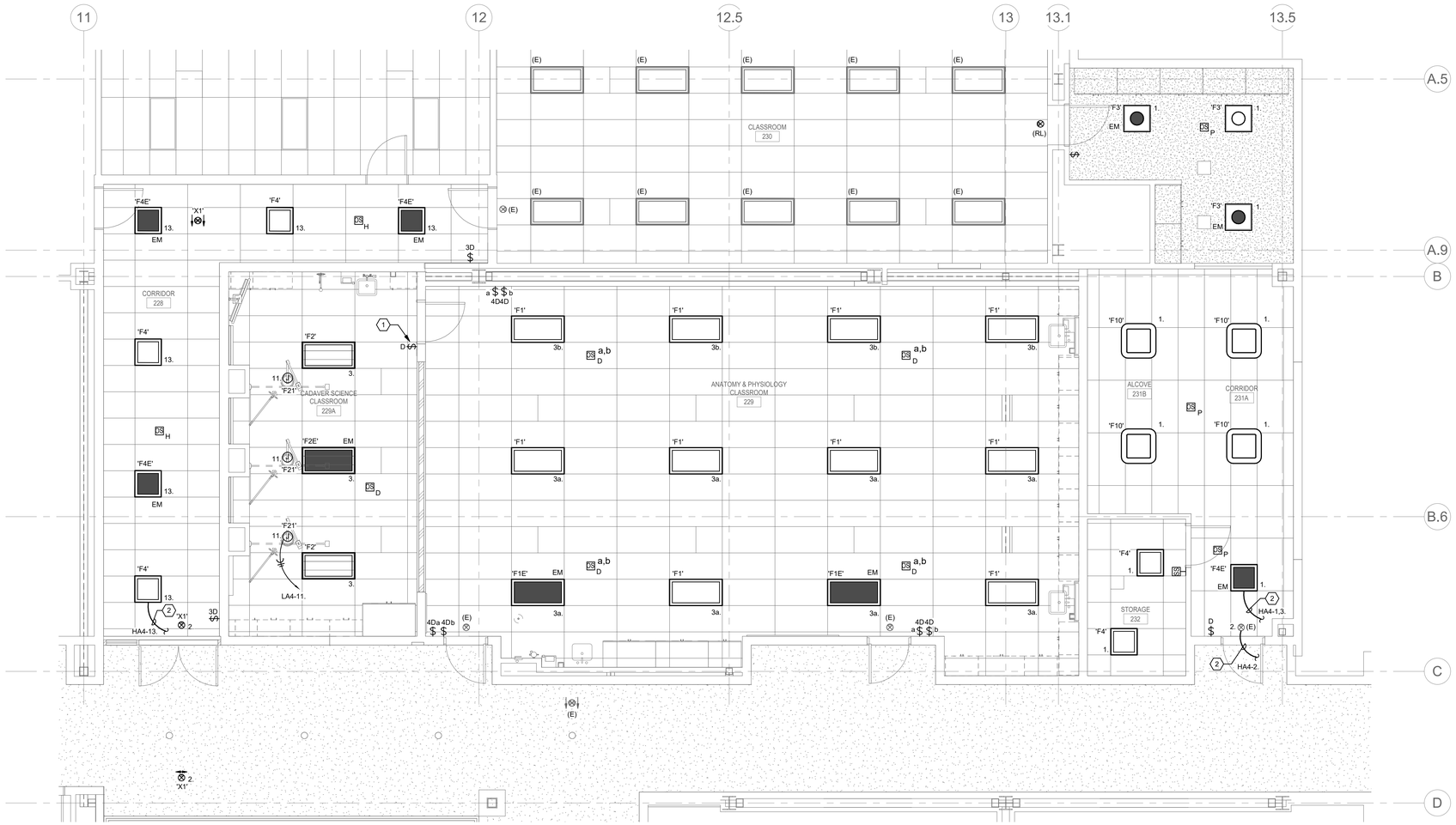

1 NEW - 2ND FLOOR PLAN - A&P LAB - LIGHTING

0' 4' 8' 16'

1/4" = 1'-0"

9/29/2021 2:47:02 PM

NOLL & TAM ARCHITECTS

729 Heinz Avenue
Berkeley, CA 94710
tel 510.542.2200
fax 510.542.2201

ARCHITECTS SEAL

APPROVALS

FILE NUMBER: 07-C1

DIVISION OF THE STATE ARCHITECT

APP# 01-117630

ACS_____ FLS_____ SSS_____

Date:

PROJECT 2016-0538

CONTACT Hai Phan

INTERFACE ENGINEERING

135 Main Street
Suite 400
San Francisco, CA 94105
TEL 415.489.7240
FAX 415.489.7289
www.interfaceengineering.com

PROJECT TITLE

CONTRA COSTA CCD

D-4002

DVC SAN RAMON CAMPUS EXPANSION & RENOVATION

1690 Watermill Rd.
San Ramon, CA 94582

ISSUE TITLE

INCREMENT 1

ISSUE DATE	11/30/2018
NOLL & TAM JOB NUMBER	21630

REVISIONS

NO.	DATE	DESCRIPTION

SHEET TITLE

NEW - 2ND FLOOR - EAST - A&P LAB - LIGHTING

SHEET NUMBER

E2.47B.1

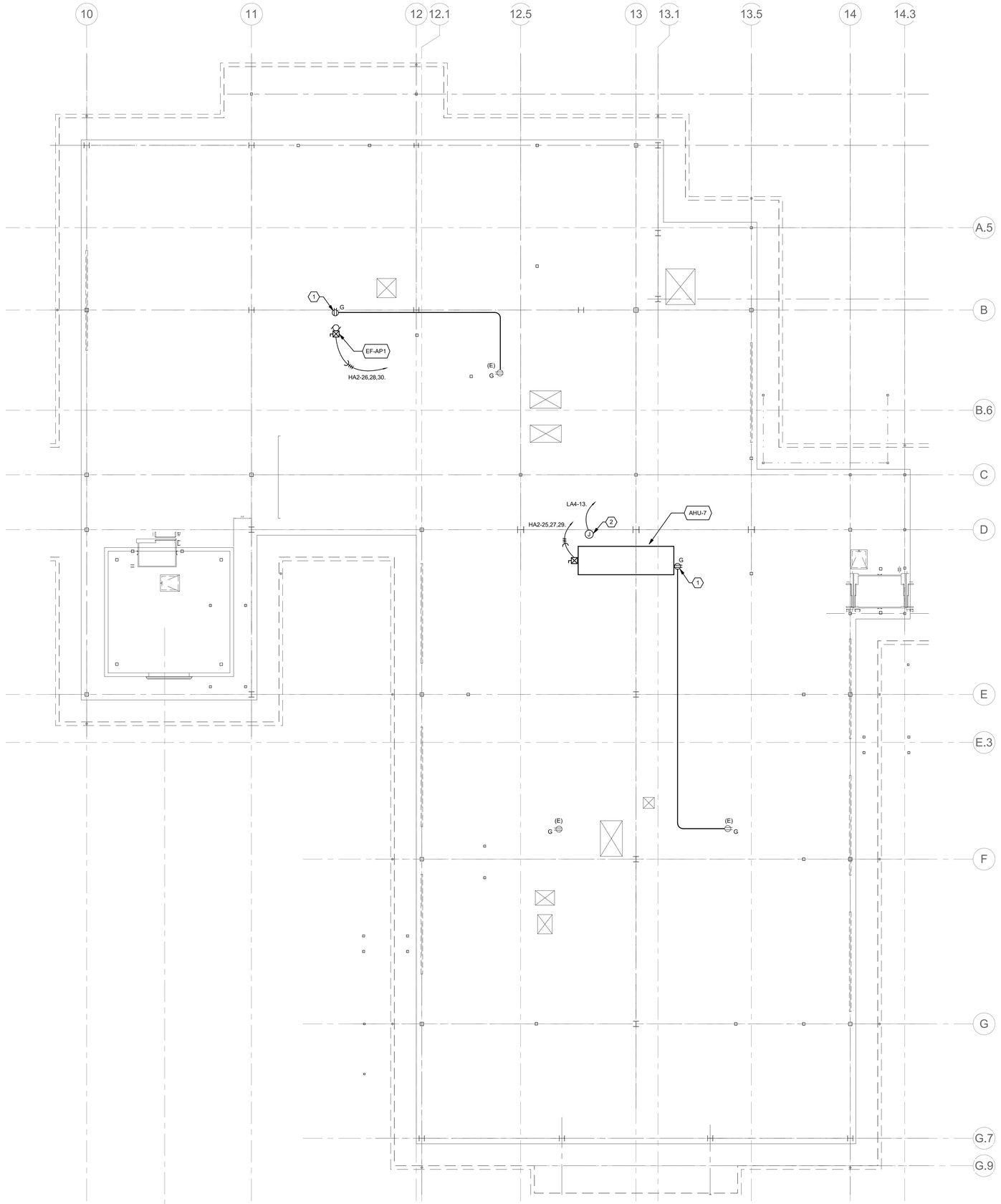

1 PARTIAL ATTIC PLAN - ELECTRICAL

0' 4' 8' 16'

1/8" = 1'-0"

1D

GENERAL SHEET NOTES

A. COORDINATE EXACT LOCATION AND MOUNTING HEIGHT OF RECEPTACLES AND ELECTRICAL DEVICES WITH ARCHITECT PRIOR TO INSTALLATION.

B. COORDINATE EXACT LOCATION AND POWER REQUIREMENTS OF HVAC UNITS WITH DIVISION 23 PRIOR TO INSTALLATION.

SHEET KEYNOTES

1. CONNECT NEW RECEPTACLE TO EXSITING NEARBY RECEPTACLE CIRCUIT AS SHOWN.
2. POWER CONNECTION TO ELECTRONIC TRAP PRIMER.

NOLL & TAM ARCHITECTS

729 Heinz Avenue
Berkeley, CA 94710
tel 510.542.2200
fax 510.542.2201

ARCHITECTS SEAL

APPROVALS

FILE NUMBER: 07-C1

DIVISION OF THE STATE ARCHITECT

APP# 01-117630

ACS_____ FLS_____ SSS_____

Date:

PROJECT 2016-0538

CONTACT Hai Phan

INTERFACE ENGINEERING

135 Main Street
Suite 400
San Francisco, CA 94105
TEL 415.489.7240
FAX 415.489.7289
www.interfaceengineering.com

PROJECT TITLE

CONTRA COSTA CCD

D-4002

DVC SAN RAMON CAMPUS EXPANSION & RENOVATION

1690 Watermill Rd.
San Ramon, CA 94582

ISSUE TITLE

INCREMENT 1

ISSUE DATE	11/30/2018
NOLL & TAM JOB NUMBER	21630

REVISIONS

NO.	DATE	DESCRIPTION

SHEET TITLE

ATTIC FLOOR PLAN - POWER

SHEET NUMBER

E2.51.1

9/29/2021 2:47:03 PM

2016-0538

(E) Panel 'HB1'

277/480V, 3 Ph., 4 W.; 225A Bus with Main Lug Only Surface Mounted Panelboard

Ckt. No.	Description / Location	Load (VA)	Type	C.B. A/Pole	Note	Ph.	Note	C.B. A/Pole	Load (VA)	Type	Description / Location	Ckt. No.
1	(E) LOAD			20/1		A		20/1			(E) LOAD	2
3	(E) LOAD			20/1		B		20/1			(E) LOAD	4
5	(E) LOAD - INCREMENT 1	487	L	20/1		C		20/1			(E) LOAD	6
7	(E) LOAD - INCREMENT 1	902	L	20/1		A					(E) SPACE	8
9	(E) LOAD - INCREMENT 1	897	L	20/1		B					(E) SPACE	10
11	(E) LOAD			20/1		C					(E) SPACE	12
13	(E) LOAD			20/1		A					(E) SPACE	14
15	(E) LOAD			20/1		B					(E) SPACE	16
17	(E) SPACE					C					(E) SPACE	18
19	(E) SPACE					A					(E) SPACE	20
21	(E) SPACE					B		20/1	2,653	L	LIGHTING	22
23	(E) SPACE					C		20/1			(E) SPARE	24
25	(E) SPACE					A		20/1			(E) SPARE	26
27	(E) SPACE					B		20/1			(E) SPARE	28
29	(E) SPACE					C		20/1			(E) SPARE	30
31	(E) SPACE					A		20/1			(E) SPARE	32
33	(E) SPACE					B		20/1			(E) SPARE	34
35	(E) SPACE					C					(E) SPACE	36
37	(E) SPACE					A					(E) SPACE	38
39	(E) SPACE					B					(E) SPACE	40
41	(E) SPACE					C					(E) SPACE	42

Total Connected Load:	Ph. A	902 VA	3 Amps	Panel Connected Load:	4.9 KVA	5.9 Amps
Total Connected Load:	Ph. B	3,550 VA	13 Amps	Sub-Fed Connected Load:	0.0 KVA	0.0 Amps
Total Connected Load:	Ph. C	487 VA	2 Amps	**Total Demand Load:**	6.2 **KVA**	7.4 **Amps** (1)

Notes:
1. PROVIDE NEW BREAKER TO MATCH EXISTING IN MANUFACTURER AND AIC RATINGS.
2.
3.
4.
5.

Accessories:

2016-0538

(E) Panel 'LB2'

120/208V, 3 Ph., 4 W.; 225A Bus with Main Lug Only Surface Mounted Panelboard with an Available Fault Current of 9966A RMS

Ckt. No.	Description / Location	Load (VA)	Type	C.B. A/Pole	Note	Ph.	Note	C.B. A/Pole	Load (VA)	Type	Description / Location	Ckt. No.
1	ELECTRIFIED DESKS RM 148	1,600	R	20/1		A		20/1			(E) LOAD	2
3	ELECTRIFIED DESKS RM 148	1,600	R	20/1		B		20/1			(E) LOAD	4
5	ELECTRIFIED DESKS RM 148	1,600	R	20/1		C		20/1			(E) LOAD	6
7	(E) LOAD			20/1		A		20/1			(E) LOAD	8
9	(E) LOAD			20/1		B		20/1			(E) LOAD	10
11	(E) LOAD			20/1		C		20/1			(E) LOAD	12
13	(E) LOAD			20/1		A		20/1			(E) LOAD	14
15	RECEPTACLES RM 147	900	R	20/1	1	B					(E) SPACE	16
17	RECEPTACLES RM 147	900	R	20/1	1	C					(E) SPACE	18
19	PRINTER STATION RM 148	1,000	R	20/1	1	A					(E) SPACE	20
21	TEACHER STATION RM 148	360	R	20/1	1	B					(E) SPACE	22
23	AV BLACK BOX RM 148	360	R	20/1	1	C					(E) SPACE	24
25	ELECTRIFIED DESKS RM 148	1,600	R	20/1	1	A					(E) SPACE	26
27	(E) SPACE					B					(E) SPACE	28
29	(E) SPACE					C					(E) SPACE	30
31	(E) SPACE					A					(E) SPACE	32
33	(E) SPACE					B					(E) SPACE	34
35	(E) SPACE					C					(E) SPACE	36
37	(E) SPACE					A					(E) SPACE	38
39	(E) SPACE					B					(E) SPACE	40
41	(E) SPACE					C					(E) SPACE	42

Total Connected Load:	Ph. A	4,200 VA	35 Amps	Panel Connected Load:	9.9 KVA	27.5 Amps
Total Connected Load:	Ph. B	2,860 VA	24 Amps	Sub-Fed Connected Load:	0.0 KVA	0.0 Amps
Total Connected Load:	Ph. C	2,860 VA	24 Amps	**Total Demand Load:**	9.9 **KVA**	27.5 **Amps** (1)

Notes:
1. PROVIDE NEW BREAKER TO MATCH EXISTING IN AIC RATING AND MANUFACTURER.
2.
3.
4.
5.

Accessories:

2016-0538

(E) Dist. Panel 'PPB'

Available Fault Current: 11813A RMS

Load No.	Description / Location	Note	Load (VA)	Load Type
1	(E) LOAD			
-	---			
-	---			
2	(E) LOAD			
-	---			
-	---			
3	(E) LOAD			
-	---			
-	---			
4	(E) LOAD			
-	---			
-	---			
5	(E) LOAD			
-	---			
-	---			
6	(E) LOAD			
-	---			
-	---			
7	(E) SPACE			
-	---			
-	---			
8	(E) SPACE			
-	---			
-	---			
9	(E) SPACE			
-	---			
-	---			
10	(E) SPACE			
-	---			
-	---			
11	(E) SPACE			
-	---			
-	---			
12	(E) SPACE			
-	---			
-	---			
13	(E) SPACE			
-	---			
-	---			
14	(E) SPACE			
-	---			
-	---			

Total Connected Load:	Ph A	0 VA	0 Amps		
Total Connected Load:	Ph B	0 VA	0 Amps		
Total Connected Load:	Ph C	0 VA	0 Amps		
	Total Connected Load:	0.0 **KVA**	0.0 **Amps**		
	Total Demand Load:	0.0 **KVA**	0.0 **Amps**		(1)

NOTES:
1.
2.
3.
4.
5.

2016-0538

(E) Panel 'HA1'

277/480V, 3 Ph., 4 W.; 200A Bus with Main Lug Only Surface Mounted Panelboard with an Available Fault Current of 10958A RMS

Ckt. No.	Description / Location	Load (VA)	Type	C.B. A/Pole	Note	Ph.	Note	C.B. A/Pole	Load (VA)	Type	Description / Location	Ckt. No.
1	(E) LOAD			20/1		A		20/1			(E) LOAD	2
3	(E) LOAD			20/1		B		20/1			(E) LOAD	4
5	(E) LOAD			20/1		C		20/1			(E) LOAD	6
7	(E) LOAD			20/1		A					(E) SPACE	8
9	(E) LOAD			20/1		B					(E) SPACE	10
11	(E) LOAD			20/1		C					(E) SPACE	12
13	(E) LOAD			20/1		A					(E) SPACE	14
15	LIGHTING	874	L	20/1		B					(E) SPACE	16
17	LIGHTING	764	L	20/1		C					(E) SPACE	18
19	(E) SPACE					A					(E) SPACE	20
21	(E) SPACE					B					(E) SPACE	22
23	(E) SPACE					C					(E) SPACE	24
25	(E) SPACE					A					(E) SPACE	26
27	(E) SPACE					B					(E) SPACE	28
29	(E) SPACE					C					(E) SPACE	30

Total Connected Load:	Ph. A	0 VA	0 Amps	Panel Connected Load:	1.6 KVA	2.0 Amps
Total Connected Load:	Ph. B	874 VA	3 Amps	Sub-Fed Connected Load:	0.0 KVA	0.0 Amps
Total Connected Load:	Ph. C	764 VA	3 Amps	**Total Demand Load:**	2.0 **KVA**	2.5 **Amps** (1)

Notes:
1.
2.
3.
4.
5.

Accessories:

2016-0538

(E) Panel 'LA1'

120/208V, 3 Ph., 4 W.; 200A Bus with Main Lug Only Surface Mounted Panelboard with an Available Fault Current of 9966A RMS

Ckt. No.	Description / Location	Load (VA)	Type	C.B. A/Pole	Note	Ph.	Note	C.B. A/Pole	Load (VA)	Type	Description / Location	Ckt. No.
1	(E) LOAD			20/1		A	1	20/1	500	R	AV BLACK BOX RM 166	2
3	(E) LOAD			20/1		B		20/1			(E) LOAD	4
5	(E) LOAD			20/1		C		20/1			(E) LOAD	6
7	(E) LOAD			20/1		A		20/1			(E) LOAD	8
9	(E) LOAD			20/1		B		20/1			(E) LOAD	10
11	(E) LOAD			20/1		C		20/1			(E) LOAD	12
13	(E) LOAD			20/1		A		60/3			(E) LOAD	14
15	(E) LOAD			20/1		B		-			(E) LOAD	16
17	(E) LOAD			20/1		C		-			(E) LOAD	18
19	(E) LOAD			20/1		A		20/1			(E) LOAD	20
21	(E) LOAD			20/1		B		20/1			(E) LOAD	22
23	(E) LOAD			20/1		C		20/1			(E) LOAD	24
25	(E) LOAD			20/2		A		20/1			(E) LOAD	26
27	(E) LOAD			-		B		20/1			(E) LOAD	28
29	(E) LOAD			15/1		C		20/1			(E) LOAD	30
31	(E) LOAD			20/2		A		20/1			(E) LOAD	32
33	(E) LOAD			-		B		20/1			(E) LOAD	34
35	(E) LOAD			20/1		C		20/1			(E) LOAD	36
37	RECEPTACLES RM 170	1,080	R	20/1	1	A		20/1			(E) LOAD	38
39	(E) LOAD			20/1		B		20/1			(E) LOAD	40
41	RECEPTACLES RM 166	1,060	R	20/1	1	C		20/1			(E) LOAD	42

Total Connected Load:	Ph. A	1,580 VA	13 Amps	Panel Connected Load:	2.6 KVA	7.3 Amps
Total Connected Load:	Ph. B	0 VA	0 Amps	Sub-Fed Connected Load:	0.0 KVA	0.0 Amps
Total Connected Load:	Ph. C	1,060 VA	9 Amps	**Total Demand Load:**	2.6 **KVA**	7.3 **Amps** (1)

Notes:
1. PROVIDE NEW BREAKER TO MATCH EXISTING IN MANUFACTURER AND AIC RATINGS.
2.
3.
4.
5.

Accessories:

2016-0538

(E) Panel 'LA2'

120/208V, 3 Ph., 4 W.; 225A Bus with Main Lug Only Surface Mounted Panelboard with an Available Fault Current of 9966A RMS

Ckt. No.	Description / Location	Load (VA)	Type	C.B. A/Pole	Note	Ph.	Note	C.B. A/Pole	Load (VA)	Type	Description / Location	Ckt. No.
1	(E) LOAD			20/1		A		20/1			(E) LOAD	2
3	(E) LOAD			20/1		B		20/1			(E) LOAD	4
5	(E) LOAD			20/1		C		20/1			(E) LOAD	6
7	(E) LOAD			20/1		A					(E) SPACE	8
9	(E) LOAD			20/1		B					(E) SPACE	10
11	(E) LOAD			20/1		C					(E) SPACE	12
13	(E) LOAD			20/1		A					(E) SPACE	14
15	(E) LOAD			20/1		B					(E) SPACE	16
17	(E) LOAD			20/1		C					(E) SPACE	18
19	(E) LOAD			20/1	1	A		20/1	1,000	R	SHORT THROW PROJECTORS RM 164	20
21	(E) LOAD			20/1		B		20/1			(E) LOAD	22
23	(E) LOAD			20/1		C	1	20/1	1,080	R	RECEPTACLES RM 164	24
25	(E) LOAD			20/1		A	1	20/1	1,080	R	RECEPTACLES RM 164	26
27	(E) LOAD			20/1		B	1	20/1	1,080	R	RECEPTACLES RM 164	28
29	(E) LOAD			20/1		C	1	20/1	1,000	M	MOTORIZED PROJ. SCREENS RM 164	30
31	(E) SPACE					A	1	20/1	500	R	PROJECTOR RM 164	32
33	(E) SPACE					B	1	20/1	500	R	PROJECTOR RM 164	34
35	(E) LOAD			20/1		C		20/1			(E) LOAD	36
37	(E) LOAD			20/1		A		20/1			(E) LOAD	38
39	(E) LOAD			20/1		B		20/1			(E) LOAD	40
41	(E) LOAD			20/1		C		20/1			(E) LOAD	42

Total Connected Load:	Ph. A	2,580 VA	21 Amps	Panel Connected Load:	6.2 KVA	17.3 Amps
Total Connected Load:	Ph. B	1,580 VA	13 Amps	Sub-Fed Connected Load:	0.0 KVA	0.0 Amps
Total Connected Load:	Ph. C	2,080 VA	17 Amps	**Total Demand Load:**	6.5 **KVA**	18.0 **Amps** (1)

Notes:
1. PROVIDE NEW BREAKER TO MATCH EXISTING IN MANUFACTURER AND AIC RATINGS.
2.
3.
4.
5.

Accessories:

2016-0538

(E) Panel 'LA1A'

120/208V, 3 Ph., 4 W.; 225A Bus with Main Lug Only Surface Mounted Panelboard with an Available Fault Current of 9966A RMS

Ckt. No.	Description / Location	Load (VA)	Type	C.B. A/Pole	Note	Ph.	Note	C.B. A/Pole	Load (VA)	Type	Description / Location	Ckt. No.
1	(E) LOAD			20/1		A		20/1			(E) LOAD	2
3	(E) LOAD			20/1		B		20/1	500	R	AV BLACK BOX RM 164	4
5	(E) LOAD			20/1		C	1	20/1	720	R	RECEPTACLES RM 164, 168	6
7	(E) LOAD			20/1		A	1	20/1	500	R	AV BLACK BOX RM 168	8
9	(E) LOAD			20/2		B	1	20/1	720	R	RECEPTACLES RM 168	10
11	(E) LOAD			-		C	1	20/1	500	R	AV BLACK BOX RM 162	12
13	(E) LOAD			20/1		A		20/1			(E) LOAD	14
15	(E) LOAD			20/2		B		20/1			(E) LOAD	16
17	(E) LOAD			-		C		20/1			(E) LOAD	18
19	(E) LOAD			15/1		A		20/1			(E) LOAD	20
21	(E) LOAD			20/2		B		20/1			(E) LOAD	22
23	(E) LOAD			-		C		20/1			(E) LOAD	24
25	(E) LOAD			20/2		A		20/1			(E) LOAD	26
27	(E) LOAD			-		B		20/1			(E) LOAD	28
29	(E) LOAD			20/2		C		20/1			(E) LOAD	30
31	(E) LOAD					A		20/1			(E) LOAD	32
33	(E) LOAD			20/2		B		20/1			(E) LOAD	34
35	(E) LOAD			-		C		20/1			(E) LOAD	36
37	(E) LOAD			20/2		A		20/1			(E) LOAD	38
39	(E) LOAD			-		B		20/1			(E) LOAD	40
41	(E) LOAD			20/1		C		20/1			(E) LOAD	42

Total Connected Load:	Ph. A	500 VA	4 Amps	Panel Connected Load:	2.9 KVA	8.2 Amps
Total Connected Load:	Ph. B	1,220 VA	10 Amps	Sub-Fed Connected Load:	0.0 KVA	0.0 Amps
Total Connected Load:	Ph. C	1,220 VA	10 Amps	**Total Demand Load:**	2.9 **KVA**	8.2 **Amps** (1)

Notes:
1. PROVIDE NEW BREAKER TO MATCH EXISTING IN MANUFACTURER AND AIC RATINGS.
2.
3.
4.
5.

Accessories:

2016-0538

(E) Panel 'HA2'

277/480V, 3 Ph., 4 W.; 225A Bus with Main Lug Only Surface Mounted Panelboard with an Available Fault Current of 10958A RMS

Ckt. No.	Description / Location	Load (VA)	Type	C.B. A/Pole	Note	Ph.	Note	C.B. A/Pole	Load (VA)	Type	Description / Location	Ckt. No.
1	(E) LOAD			100/3		A		60/3			(E) LOAD	2
3	(E) LOAD			-		B		-			(E) LOAD	4
5	(E) LOAD			-		C		-			(E) LOAD	6
7	(E) LOAD			30/3		A		100/3			(E) LOAD	8
9	(E) LOAD			-		B		-			(E) LOAD	10
11	(E) LOAD			-		C		-			(E) LOAD	12
13	(E) LOAD			60/3		A		30/3			(E) LOAD	14
15	(E) LOAD			-		B		-			(E) LOAD	16
17	(E) LOAD			-		C		-			(E) LOAD	18
19	(E) LOAD			60/3		A		30/3			(E) LOAD	20
21	(E) LOAD			-		B		-			(E) LOAD	22
23	(E) LOAD			-		C		-			(E) LOAD	24
25	AHU-7	2,411	M	20/3	1	A	1	15/3	2,106	M	EF-AP1	26
27	-	2,411	M	-		B		-	2,106	M	-	28
29	-	2,411	M	-		C		-	2,106	M	-	30
31	(E) SPACE					A					(E) SPACE	32
33	(E) SPACE					B					(E) SPACE	34
35	(E) SPACE					C					(E) SPACE	36
37	(E) SPACE					A					(E) SPACE	38
39	(E) SPACE					B					(E) SPACE	40
41	(E) SPACE					C					(E) SPACE	42

Total Connected Load:	Ph. A	4,517 VA	16 Amps	Panel Connected Load:	13.6 KVA	16.3 Amps
Total Connected Load:	Ph. B	4,517 VA	16 Amps	Sub-Fed Connected Load:	0.0 KVA	0.0 Amps
Total Connected Load:	Ph. C	4,517 VA	16 Amps	**Total Demand Load:**	15.4 **KVA**	18.5 **Amps** (1)

Notes:
1. PROVIDE NEW BREAKER TO MATCH EXISTING IN MANUFACTURER AND AIC RATING.
2.
3.
4.
5.

Accessories:

2016-0538

(E) Panel 'HA4'

277/480V, 3 Ph., 4 W.; 200A Bus with Main Lug Only Surface Mounted Panelboard with an Available Fault Current of 10958A RMS

Ckt. No.	Description / Location	Load (VA)	Type	C.B. A/Pole	Note	Ph.	Note	C.B. A/Pole	Load (VA)	Type	Description / Location	Ckt. No.
1	LIGHTING	319	L	20/1		A		20/1			(E) LOAD	2
3	LIGHTING	796	L	20/1		B		20/1			(E) LOAD	4
5	(E) LOAD			20/1		C		20/1			(E) LOAD	6
7	(E) LOAD			20/1		A					(E) SPACE	8
9	(E) LOAD			20/1		B					(E) SPACE	10
11	(E) LOAD			20/1		C					(E) SPACE	12
13	LIGHTING	171	L	20/1		A					(E) SPACE	14
15	(E) SPACE					B					(E) SPACE	16
17	(E) SPACE					C					(E) SPACE	18
19	(E) SPACE					A					(E) SPACE	20
21	(E) SPACE					B					(E) SPACE	22
23	(E) SPACE					C					(E) SPACE	24

Total Connected Load:	Ph. A	490 VA	2 Amps	Panel Connected Load:	1.3 KVA	1.5 Amps
Total Connected Load:	Ph. B	796 VA	3 Amps	Sub-Fed Connected Load:	0.0 KVA	0.0 Amps
Total Connected Load:	Ph. C	0 VA	0 Amps	**Total Demand Load:**	1.6 **KVA**	1.9 **Amps** (1)

Notes:
1.
2.
3.
4.
5.

Accessories:

2016-0538

(E) Panel 'LA4' Section 1

120/208V, 3 Ph., 4 W.; 225A Bus with Main Lug Only Surface Mounted Panelboard with an Available Fault Current of 10834A RMS

Ckt. No.	Description / Location	Load (VA)	Type	C.B. A/Pole	Note	Ph.	Note	C.B. A/Pole	Load (VA)	Type	Description / Location	Ckt. No.
1	RECEPTACLES RM 229A	1,080	R	20/1		A		20/1			(E) LOAD	2
3	RECEPTACLES RM 229A	540	R	20/1		B		20/1			(E) LOAD	4
5	RECEPTACLES RM 229A	540	R	20/1		C		20/1			(E) LOAD	6
7	(E) FIRE ALARM			20/1		A		20/1			(E) LOAD	8
9	RECEPTACLES RM 229A	540	R	20/1		B		20/1			(E) LOAD	10
11	PROCEDURE LIGHTS	450	G	20/1		C		20/1			(E) LOAD	12
13	ETP-1	100	G	20/1		A		20/1			(E) LOAD	14
15	(E) LOAD			20/1		B		20/1			(E) LOAD	16
17	(E) LOAD			20/1		C		20/1			(E) LOAD	18
19	RECEPTACLES RM 229	1,080	R	20/1		A		20/1	500	R	AV BLACK BOX	20
21	RECEPTACLES RM 229	1,080	R	20/1		B		20/1	720	R	RECEPTACELS RM 229	22
23	RECEPTACLES RM 229	1,080	R	20/1		C		20/1			(E) LOAD	24
25	RECEPTACLES RM 229	1,080	R	20/1		A		60/3			(E) LOAD	26
27	RECEPTACLES RM 229	1,080	R	20/1	1	B		-	-		-	28
29	(E) LOAD			20/1		C		-			-	30
31	(E) LOAD			20/1		A		20/1			(E) LOAD	32
33	(E) LOAD			20/1		B		20/1			(E) LOAD	34
35	(E) LOAD			20/1		C		20/1			(E) LOAD	36
37	(E) SPACE					A					(E) SPACE	38
39	(E) SPACE					B					(E) SPACE	40
41	(E) SPACE					C					(E) SPACE	42

Total Connected Load:	Ph. A	3,840 VA	32 Amps	Panel Connected Load:	9.9 KVA	27.4 Amps
Total Connected Load:	Ph. B	3,960 VA	33 Amps	Sub-Fed Connected Load:	16.5 KVA	45.9 Amps
Total Connected Load:	Ph. C	2,070 VA	17 Amps	**Total Demand Load:**	20.5 **KVA**	57.0 **Amps** (1)

Notes:
1. PROVIDE NEW BREAKER TO MATCH EXISTING IN MANUFACTURER AND AIC RATINGS.
2.
3.
4.
5.

Accessories:
Provide Feed-Thru Lugs

2016-0538

(E) Panel 'LA4' Section 2

120/208V, 3 Ph., 4 W.; 225A Bus with Main Lug Only Surface Mounted Panelboard with an Available Fault Current of 10652A RMS

Ckt. No.	Description / Location	Load (VA)	Type	C.B. A/Pole	Note	Ph.	Note	C.B. A/Pole	Load (VA)	Type	Description / Location	Ckt. No.
43	(E) LOAD			20/1		A		20/1			(E) LOAD	44
45	(E) LOAD			20/1		B		20/1			(E) LOAD	46
47	(E) LOAD			20/1		C		20/1			(E) LOAD	48
49	(E) LOAD			20/2		A		20/1			(E) LOAD	50
51	-			-		B		20/1			(E) LOAD	52
53	(E) SPACE					C		20/1			(E) LOAD	54
55	(E) LOAD			50/2		A		20/1			(E) LOAD	56
57	-			-		B		20/1			(E) LOAD	58
59	(E) LOAD			20/1		C		20/1			(E) LOAD	60
61	(E) SPACE					A		20/1			(E) LOAD	62
63	(E) SPACE					B		20/1			(E) LOAD	64
65	MILK SHAKE BLENDER	1,500	K	20/1	1	C		20/1			(E) LOAD	66
67	MILK SHAKE FREEZER	1,500	K	20/1	1	A		20/1			(E) LOAD	68
69	AUTOMATIC DOOR OPERATOR	500	G	20/1	1	B		20/1	1,000	K	RECEPTACLES RM 181	70
71	(E) LOAD			20/1		C		20/1	1,500	K	MICROWAVE	72
73	(E) LOAD			20/1		A		20/1			(E) SPARE	74
75	RECEPTACLES RM 182	900	R	20/1	1	B		20/1	1,000	K	REFRIGERATOR	76
77	RECEPTACLES RM 181	900	R	20/1	1	C		20/1	1,000	K	REFRIGERATOR	78
79	RECEPTACLES RM 181A	900	R	20/1	1	A		20/1	1,000	K	FREEZER	80
81	(E) LOAD			20/1		B		20/1	1,000	K	REFRIGERATOR	82
83	RECEPTACLES RM 181A	900	R	20/1	1	C	1	20/1	1,000	K	REFRIGERATOR	84

Total Connected Load:	Ph. A	3,400 VA	28 Amps	Panel Connected Load:	14.6 KVA	40.5 Amps
Total Connected Load:	Ph. B	4,400 VA	37 Amps	Sub-Fed Connected Load:	0.0 KVA	0.0 Amps
Total Connected Load:	Ph. C	6,800 VA	57 Amps	**Total Demand Load:**	Refer to Section 1	(1)

Notes:
1. PROVIDE NEW BREAKER TO MATCH EXISTING IN MANUFACTURER AND AIC RATINGS.
2.
3.
4.
5.

Accessories:

FEEDER SCHEDULE

Key

A, C, S, X — A = Aluminum; C = Conduit only; S = Service secondary; X = Separately derived system

2254C — 2-1/2" DIAMETER EMPTY CONDUIT WITH PULL CORD

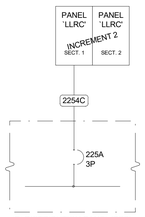

(E) DISTRIBUTION PANEL 'PPB'
600A, 120/208V, 3PH, 4W

1 PARTIAL SINGLE LINE DIAGRAM

SHEET KEYNOTES

1. LOADS SHOWN ARE FOR NEW LOADS ONLY.

NOLL & TAM ARCHITECTS

729 Heinz Avenue
Berkeley, CA 94710
tel 510.542.2200
fax 510.542.2201

ARCHITECTS SEAL

APPROVALS

FILE NUMBER: 07-C1

DIVISION OF THE STATE ARCHITECT

APP# 01-117630

ACS_____FLS_____SSS_____

Date:

PROJECT 2016-0538

CONTACT Hai Phan

INTERFACE ENGINEERING

135 Main Street
Suite 400
San Francisco, CA 94105
TEL 415.489.7240
FAX 415.489.7289
www.interfaceengineering.com

PROJECT TITLE

CONTRA COSTA CCD
D-4002
DVC SAN RAMON CAMPUS EXPANSION & RENOVATION

1690 Watermill Rd.
San Ramon, CA 94582

ISSUE TITLE

INCREMENT 1

ISSUE DATE **11/30/2018**

NOLL & TAM JOB NUMBER **21630**

REVISIONS

NO.	DATE	DESCRIPTION

SHEET TITLE

PARTIAL SINGLE LINE DIAGRAM AND PANEL SCHEDULES - ELECTRICAL

SHEET NUMBER

E4.01.1

9/29/2021 2:47:04 PM

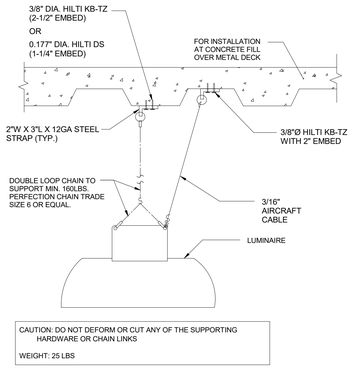

1 LUMINAIRE CHAIN SUPPORT

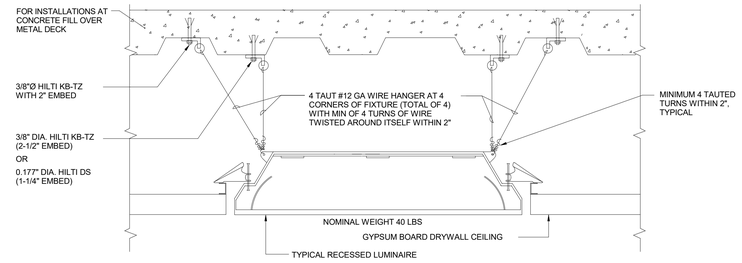

4 RECESSED LUMINAIRE HANGING METHOD

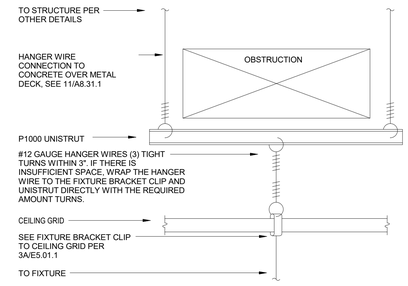

TRAPEZE HANGER AROUND 6 OBSTRUCTIONS TO FIXTURE

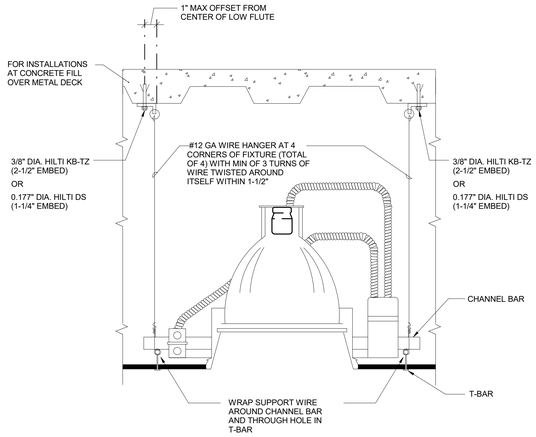

2 RECESSED DOWNLIGHT LUMINAIRE

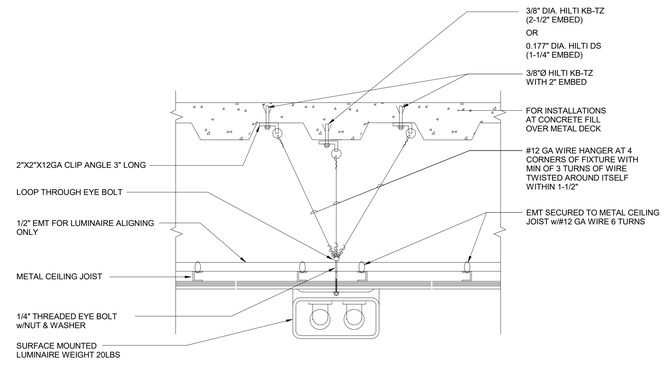

SURFACE MOUNTED 5 LUMINAIRE MOUNTING METHOD

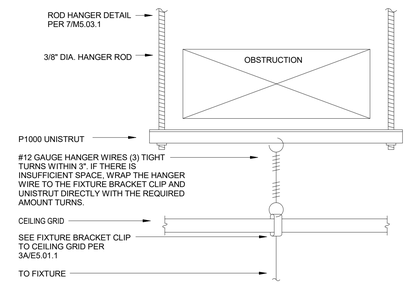

ROD TRAPEZE HANGER AROUND 6A OBSTRUCTIONS TO FIXTURE

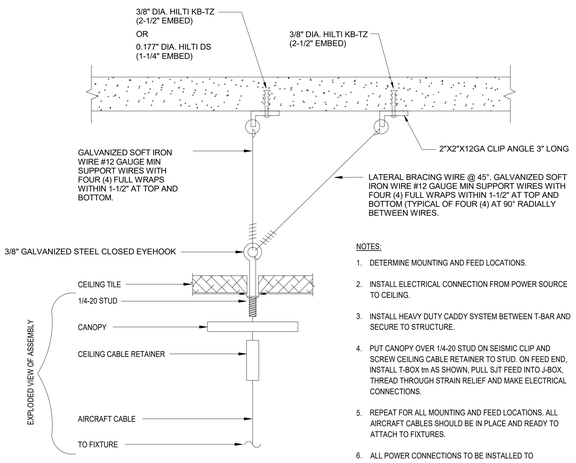

3 CABLE HUNG LUMINAIRE IN T-BAR CEILING

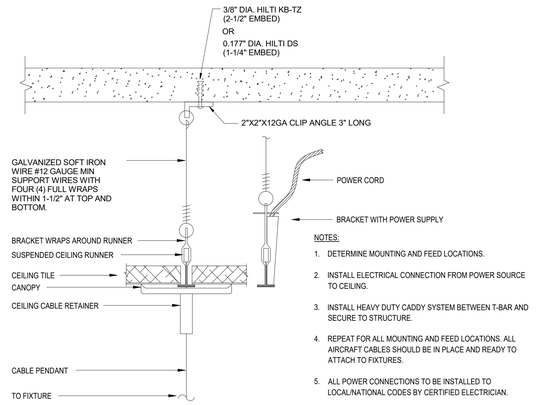

3A CABLE HUNG LUMINAIRE IN T-BAR CEILING - ALTERNATE

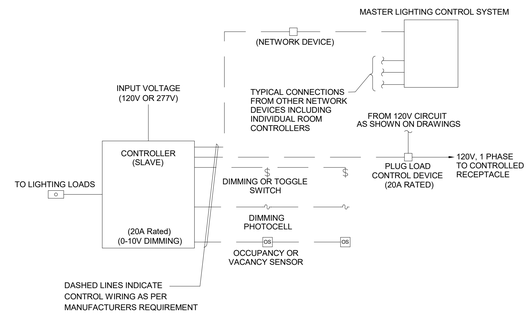

7 TITLE 24 LIGHTING CONTROL DETAIL

NO SCALE

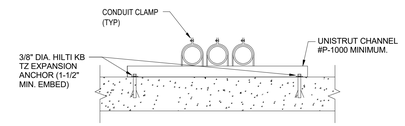

8 CONDUIT MOUNTING DETAIL

NOLL & TAM ARCHITECTS
729 Heinz Avenue
Berkeley, CA 94710
tel 510.542.2200
fax 510.542.2201

ARCHITECTS SEAL

APPROVALS

FILE NUMBER: 07-C1

DIVISION OF THE STATE ARCHITECT
APP# 01-117630
ACS_____ FLS_____ SSS_____
Date:

PROJECT 2016-0538
CONTACT Hai Phan

INTERFACE ENGINEERING
135 Main Street
Suite 400
San Francisco, CA 94105
TEL 415.489.7240
FAX 415.489.7289
www.interfaceengineering.com

PROJECT TITLE

CONTRA COSTA CCD
D-4002
DVC SAN RAMON CAMPUS EXPANSION & RENOVATION

1690 Watermill Rd.
San Ramon, CA 94582

ISSUE TITLE
INCREMENT 1

ISSUE DATE	11/30/2018
NOLL & TAM JOB NUMBER	21630

REVISIONS

NO.	DATE	DESCRIPTION

SHEET TITLE
DETAILS - ELECTRICAL

SHEET NUMBER
E5.01.1

9/29/2021 2:47:04 PM

LEGEND

EcoSense

04. LIGHTING CONTROL PACKS

ECO — LDCM-PL-120-277-010V-GR
0-10V to ELV Module w/ Reverse Phase Dimming for Electronic Loads; 3.9A Rating; 120/277VAC

nLight

02. USER WALL STATIONS

4Sd — nPODM 4S DX XX
8-Button Scene Selector. Each of 4 Buttons Runs Local or Remote Scene. 4-Button 1-Channel ON/OFF + Raise/Lower. Low Voltage Digital Wallpod. In-Wall Mount

1d — nPODM DX XX
3-Button, 1-Channel, Low Voltage Digital Wallpod w/ ON/OFF + Raise/Lower. In-Wall Mount

03. SENSORS

DS 9 DT — nCM PDT 9 ADCX RJB
Ceiling Mount Standard Dual-Tech Occupancy Sensor w/ Integral Daylight Sensor

9 DT — nCM PDT 9 RJB
Ceiling Mount Standard Dual-Tech Occupancy Sensor

nPC — nIO PC KIT
Exterior Photocell Kit, Includes Exterior PhotoControl, nIO Input Module, Power Supply

04. LIGHTING CONTROL PACKS

RD — nPP16 D
Power/Relay Pack w/ 0-10V Dimming Output; 16A Relay; 100mA DC Sink; 120/277VAC; Chase Nipple Mount

08. ACCESSORIES

MSKD — MASKKIT DOME 20
Sensor Switch Masking Kit - For DOME Sensor Lenses - 20 Pack

nCOMKIT
nLight PC Comm Tool w/ USB/Ethernet/nLight Adapter

Sensor Switch

01. WALL SWITCH SENSORS

OS D DT — WSX PDT D WH
Line-Voltage Wall-Switch-Occupancy-Sensor. Dual-Tech Sensor. Int. 5A Relay. Auto-ON/OFF Operation with 0-10V Dimming Only.

nLIGHT PROJECT SPECIFIC NOTES

16500 LINE NOTE — Controls quote PC#17-60902

16500 LINE NOTE — BOM is based on Esheets and lighting specifications developed by 16500 dated 6/14/18

16500 LINE NOTE — BOM excludes (1) nECY for time clock control and (1) nADR for automatic demand response. STANDALONE SYSTEM, NO DEMAND RESPONSE OR TIME CLOCK.

16500 LINE NOTE — See Layout and/or endnotes for assumed dimming types. Please confirm all dimming protocols.

16500 LINE NOTE — BOM excludes external emergency power packs for UL924 control.

16500 LINE NOTE — BOM excludes external power packs for plug load control.

16500 LINE NOTE — Overall design and control groups have been assumed. Please confirm prior to release.

16500 LINE NOTE — BOM excludes interface devices to AV systems, HVAC, etc.

16500 LINE NOTE — External and integrated occupancy sensors are diagrammatically shown on 16500's drawings. E.C. to locate sensors 4' from HVAC registers and within manufacturer's coverage patterns.

16500 LINE NOTE — BOM excludes external emergency power packs for UL924 control, Emergency/Egress Lighting requirements via Emergency designated/speciifed Fixtures with Integral Battery Backup.

16500 LINE NOTE — BOM excludes wireless control devices. All nLight devices are connected via CAT5e cable.

16500 LINE NOTE — BOM combines ceiling occupancy and daylight sensors into a single device where applicable.

16500 LINE NOTE — BOM combines wall switch and ceiling occupancy sensors into a single wall mounted device where applicable.

16500 LINE NOTE — BOM includes nPOD GFX stations for areas with more than 4 switch legs. GFX stations are capable of up to 16 on/off/dim control.

16500 LINE NOTE — BOM excludes scene controllers unless specifically shown on nLight design.

16500 LINE NOTE — BOM includes (1) control zone for all private offices that are auto dimmed with the photocell. If separate zones are required, please request a re-quote.

16500 LINE NOTE — Separate controls for daylight zones are not included unless specified on drawings.

16500 LINE NOTE — BOM assumes areas without nLight Occupancy Sensor coverage to meet Auto-Shut Off Title 24 compliance requirements via Programmable Timeclock Controls (nECY), E.C. to verify.

16500 LINE NOTE — BOM assumes all areas containing windowed sitdelit and/or skylite boundaries without nLight Photocell Sensor control contain less than 120 Watts of General Lighting within the respective/specified "Primary Daylight Zone", E.C. to verify.

nLIGHT GENERAL NOTES

16500 NOTE — Quote based on limited information provided - quote/proposal subject to review and approval and requote as required.

16500 NOTE — Subject to manufacturer terms and conditions - see website(s) for details www.acuitybrands.com.

16500 NOTE — Does NOT include cables.

16500 NOTE — Does NOT include Code-related "commissioning" services or related services.

16500 NOTE — Does NOT include BACnet JACE appliance (for larger projects).

16500 NOTE — Does NOT include integration services.

16500 NOTE — Refer to attached drawings, details, specification sheets and/or other documentation for further information.

16500 NOTE — Under this quote, some multi-gang switches specified are consolidated into an nLight multi-channel SINGLE-GANG device (wallpod). This may affect planned rough-in. The quoted device meets or exceeds the apparent specified functionality. Customer to verify this meets requirements.

16500 NOTE — Typical Topolgy: Room=Zone, Each Zone up to 128 Devices. Up to SIX (6) rooms/zones connect to an 8-port bridge. Bridges to be located by contractor. Bridges connect to each other in linear chain and/or "spider" style network (linear chains limited to 9 bridges).

16500 NOTE — For nLight enabled fixtures with embedded sensor, EC to field install CAT5 Y splitter and daisy chain CAT5 cable to nLight devices.

APPLICABLE FIXTURES:
1.
LITHONIA WL4 LED
2. MARK LIGHTING
SLOT LED (SL2L, SL4L, SL6L)
3. MARK
LIGHTING SLOT LED PENDANT (S2L, S4L)

BASIS OF DESIGN: ACUITY NLIGHT LIGHTING CONTROL SYSTEM. COORDINATE FINAL DEVICE QUANTITY AND LOCATIONS WITH ARCHITECT AND ELECTRICAL ENGINEER. FINAL LIGHTING CONTROL DRAWINGS TO BE COORDINATED WITH CONTROLS MANUFACTURER.

9/29/2021 2:47:05 PM

NOLL & TAM ARCHITECTS
729 Heinz Avenue
Berkeley, CA 94710
tel 510.542.2200
fax 510.542.2201

ARCHITECTS SEAL

APPROVALS
FILE NUMBER: 07-C1
DIVISION OF THE STATE ARCHITECT
APP# 01-117630
ACS_____FLS_____SSS_____
Date:

PROJECT 2016-0538
CONTACT Hai Phan

INTERFACE ENGINEERING
135 Main Street
Suite 400
San Francisco, CA 94105
TEL 415.489.7240
FAX 415.489.7289
www.interfaceengineering.com

PROJECT TITLE
CONTRA COSTA CCD
D-4002
DVC SAN RAMON CAMPUS EXPANSION & RENOVATION
1690 Watermill Rd.
San Ramon, CA 94582

ISSUE TITLE
INCREMENT 1

ISSUE DATE 11/30/2018
NOLL & TAM JOB NUMBER 21630

REVISIONS

NO.	DATE	DESCRIPTION

SHEET TITLE
DETAILS - LIGHTING CONTROLS

SHEET NUMBER
E5.02.1

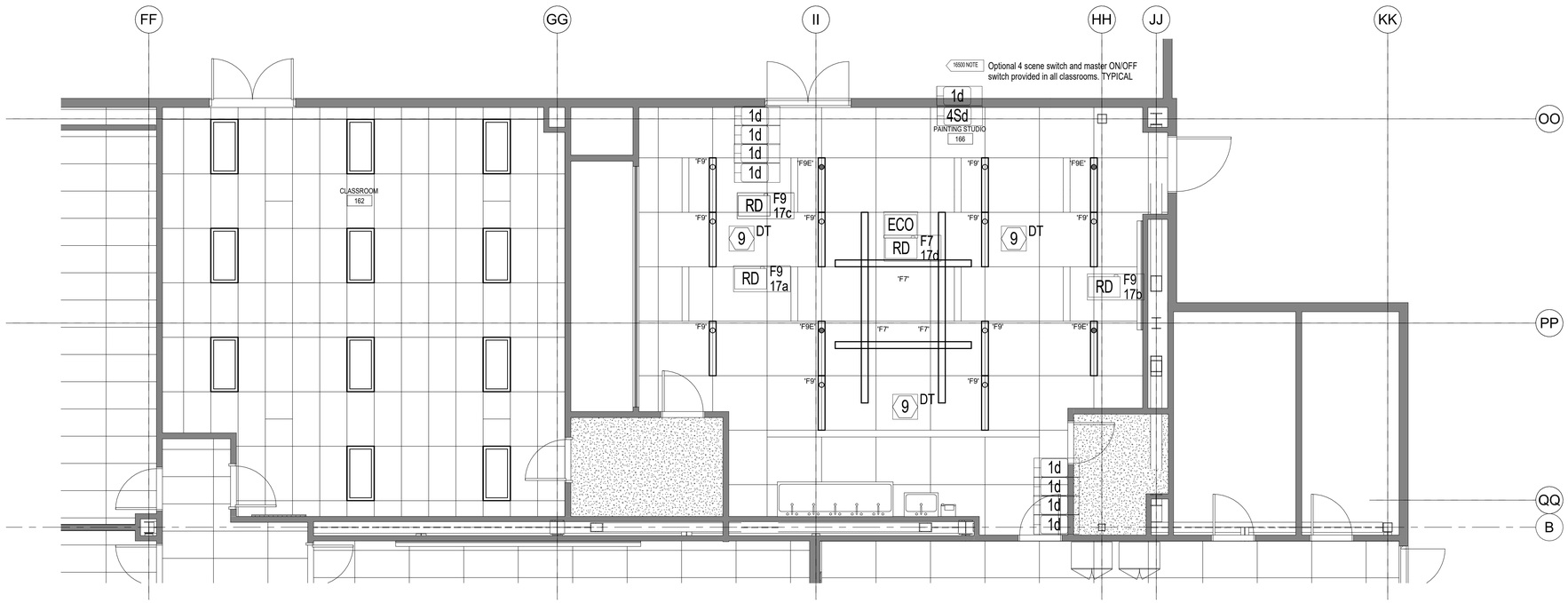

CLASSROOM - PAINTING STUDIO - LIGHTING CONTROLS

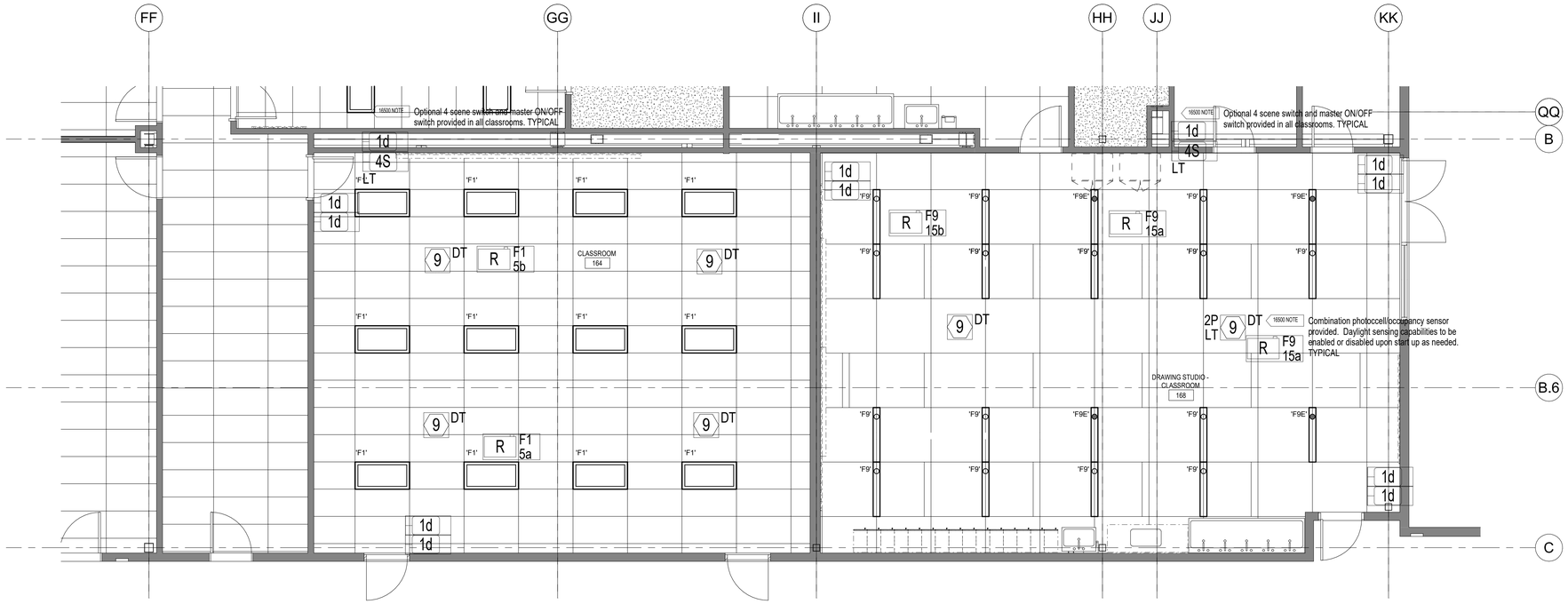

CLASSROOM - DRAWING STUDIO - LIGHTING CONTROLS

BASIS OF DESIGN: ACUITY NLIGHT LIGHTING CONTROL SYSTEM. COORDINATE FINAL DEVICE QUANTITY AND LOCATIONS WITH ARCHITECT AND ELECTRICAL ENGINEER. FINAL LIGHTING CONTROL DRAWINGS TO BE COORDINATED WITH CONTROLS MANUFACTURER.

NOLL & TAM ARCHITECTS
729 Heinz Avenue
Berkeley, CA 94710
tel 510.542.2200
fax 510.542.2201

ARCHITECTS SEAL

APPROVALS

FILE NUMBER: 07-C1

DIVISION OF THE STATE ARCHITECT
APP# 01-117630
ACS_____ FLS_____ SSS_____
Date:

PROJECT 2016-0538
CONTACT Hai Phan

INTERFACE ENGINEERING
135 Main Street
Suite 400
San Francisco, CA 94105
TEL 415.489.7240
FAX 415.489.7289
www.interfaceengineering.com

PROJECT TITLE

CONTRA COSTA CCD
D-4002
DVC SAN RAMON CAMPUS EXPANSION & RENOVATION

1690 Watermill Rd.
San Ramon, CA 94582

ISSUE TITLE
INCREMENT 1

ISSUE DATE	11/30/2018
NOLL & TAM JOB NUMBER	21630

REVISIONS

NO.	DATE	DESCRIPTION

SHEET TITLE
DETAILS - LIGHTING CONTROLS

SHEET NUMBER
E5.03.1

9/29/2021 2:47:06 PM

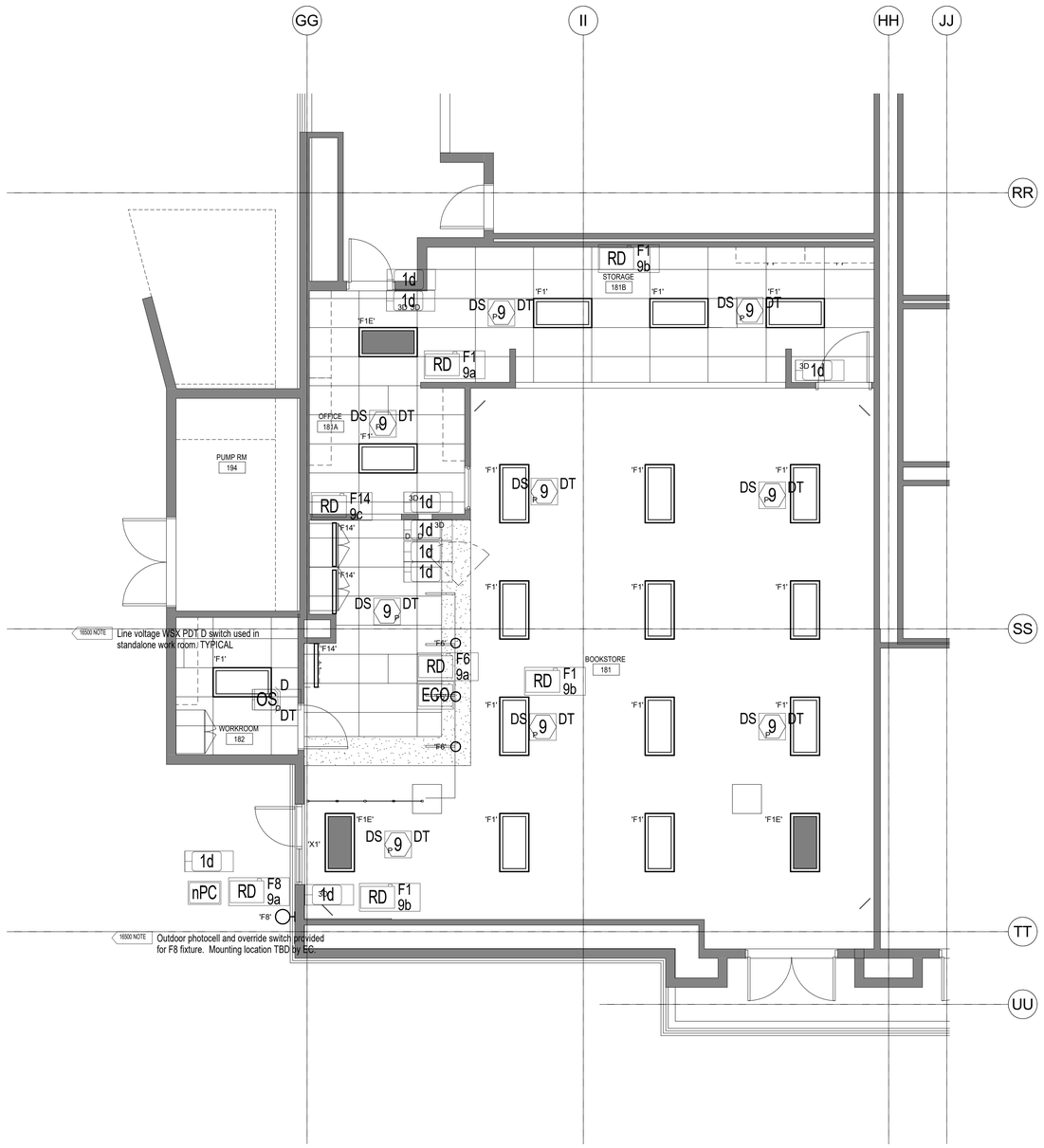

BOOKSTORE - LIGHTING CONTROLS

BASIS OF DESIGN: ACUITY NLIGHT LIGHTING CONTROL SYSTEM. COORDINATE FINAL DEVICE QUANTITY AND LOCATIONS WITH ARCHITECT AND ELECTRICAL ENGINEER. FINAL LIGHTING CONTROL DRAWINGS TO BE COORDINATED WITH CONTROLS MANUFACTURER.

NOLL & TAM ARCHITECTS

729 Heinz Avenue
Berkeley, CA 94710
tel 510.542.2200
fax 510.542.2201

ARCHITECTS SEAL

APPROVALS

FILE NUMBER: 07-C1

DIVISION OF THE STATE ARCHITECT

APP# 01-117630

ACS_____ FLS_____ SSS_____

Date:

PROJECT 2016-0538

CONTACT Hai Phan

INTERFACE ENGINEERING

135 Main Street
Suite 400
San Francisco, CA 94105
TEL 415.489.7240
FAX 415.489.7289
www.interfaceengineering.com

PROJECT TITLE

CONTRA COSTA CCD

D-4002

DVC SAN RAMON CAMPUS EXPANSION & RENOVATION

1690 Watermill Rd.
San Ramon, CA 94582

ISSUE TITLE

INCREMENT 1

ISSUE DATE 11/30/2018

NOLL & TAM JOB NUMBER 21630

REVISIONS

NO.	DATE	DESCRIPTION

SHEET TITLE

DETAILS - LIGHTING CONTROLS

SHEET NUMBER

E5.04.1

9/29/2021 2:47:07 PM

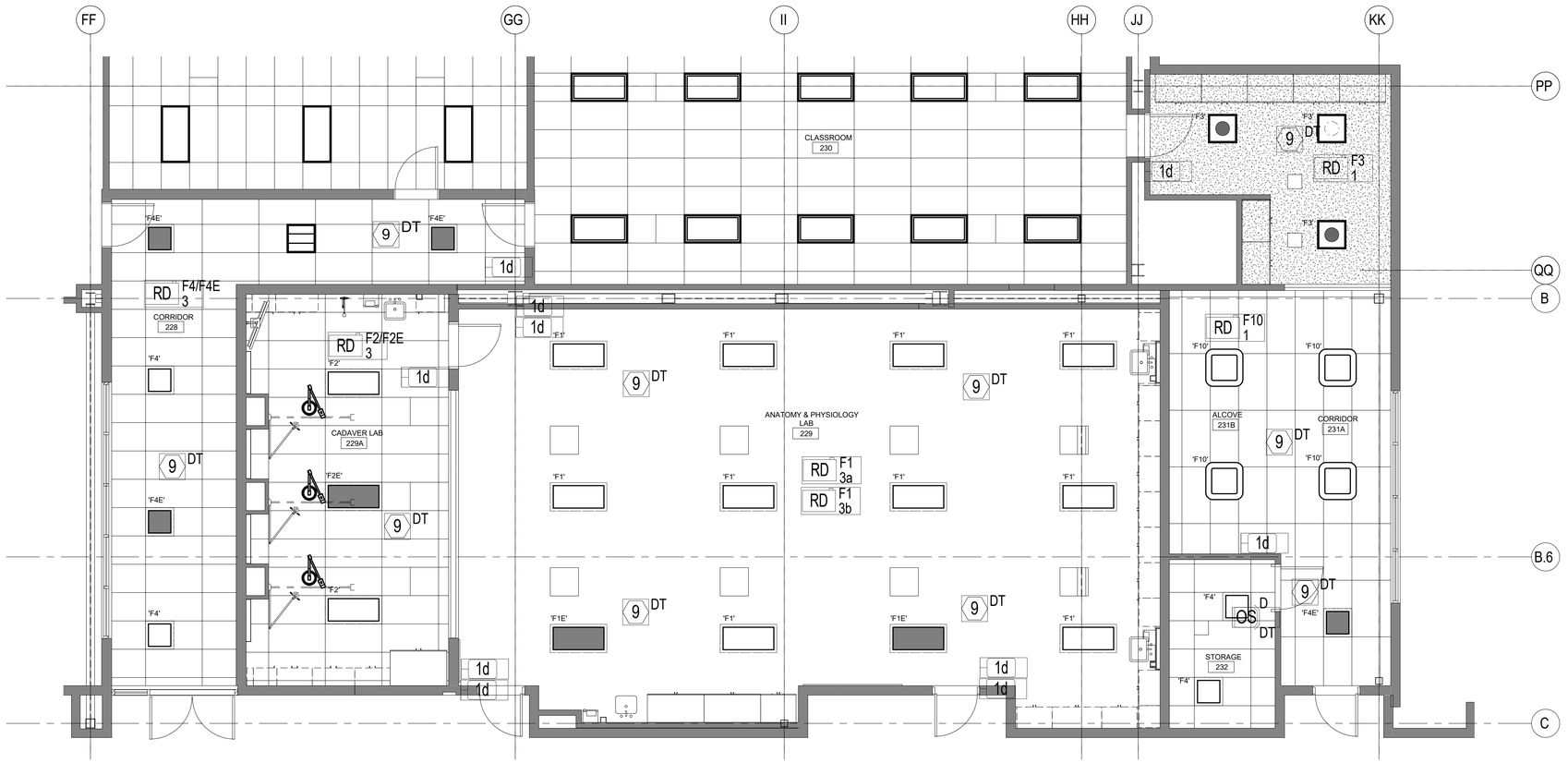

A&P LAB - LIGHTING CONTROLS

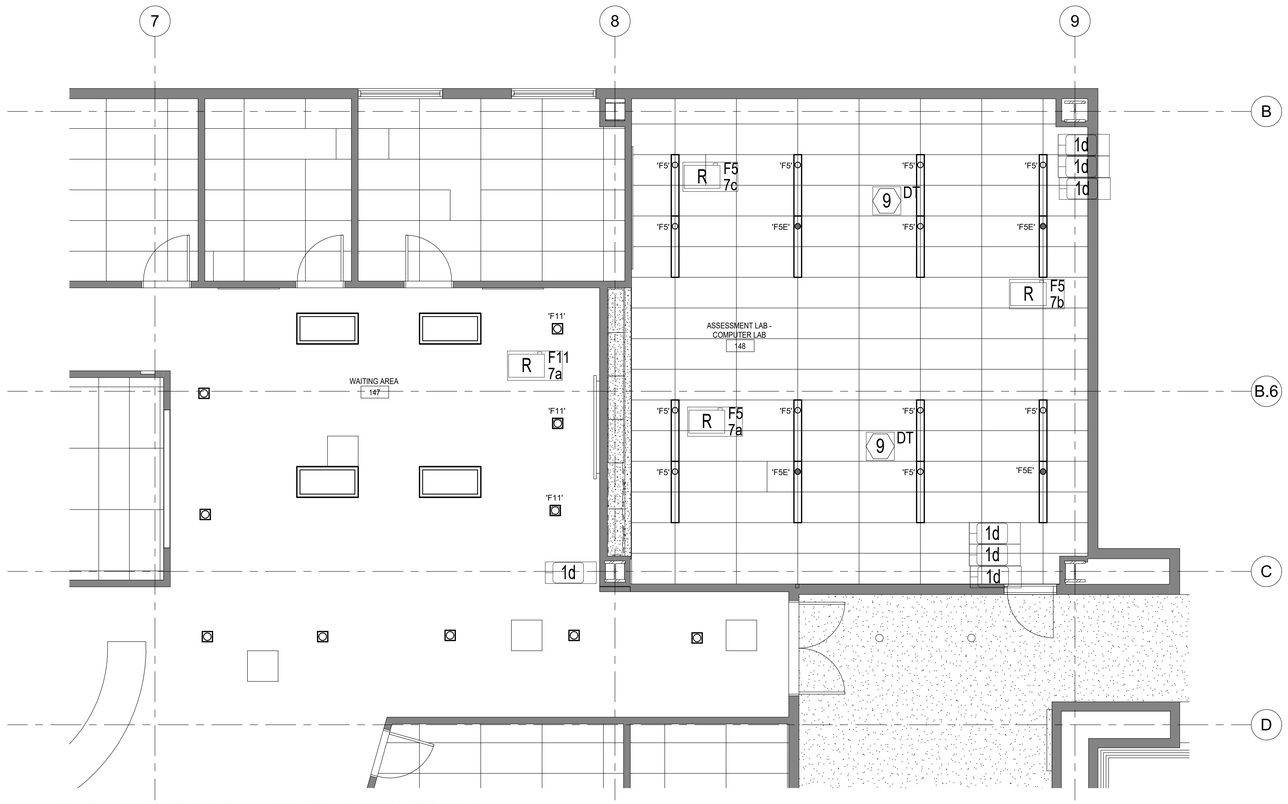

ASSESSMENT LAB - LIGHTING CONTROLS

BASIS OF DESIGN: ACUITY NLIGHT LIGHTING CONTROL SYSTEM. COORDINATE FINAL DEVICE QUANTITY AND LOCATIONS WITH ARCHITECT AND ELECTRICAL ENGINEER. FINAL LIGHTING CONTROL DRAWINGS TO BE COORDINATED WITH CONTROLS MANUFACTURER.

NOLL & TAM ARCHITECTS

729 Heinz Avenue
Berkeley, CA 94710
tel 510.542.2200
fax 510.542.2201

ARCHITECTS SEAL

APPROVALS

FILE NUMBER: 07-C1

DIVISION OF THE STATE ARCHITECT
APP# 01-117630
ACS_____ FLS_____ SSS_____
Date:

PROJECT 2016-0538
CONTACT Hai Phan

INTERFACE ENGINEERING
135 Main Street
Suite 400
San Francisco, CA 94105
TEL 415.489.7240
FAX 415.489.7289
www.interfaceengineering.com

PROJECT TITLE

CONTRA COSTA CCD
D-4002
DVC SAN RAMON CAMPUS EXPANSION & RENOVATION

1690 Watermill Rd.
San Ramon, CA 94582

ISSUE TITLE
INCREMENT 1

ISSUE DATE	11/30/2016
NOLL & TAM JOB NUMBER	21630

REVISIONS

NO.	DATE	DESCRIPTION

SHEET TITLE
DETAILS - LIGHTING CONTROLS

SHEET NUMBER
E5.05.1

9/29/2021 2:47:07 PM

TYPICAL FOR NON-nLIGHT ENABLED LUMINAIRES

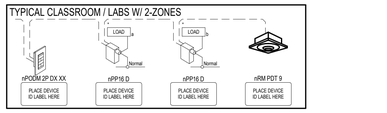

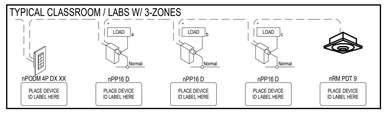

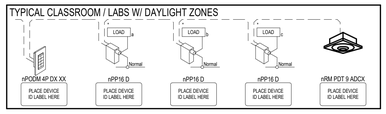

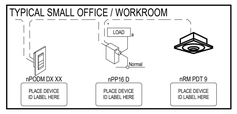

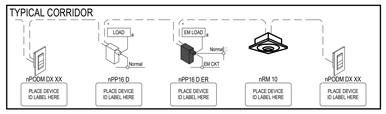

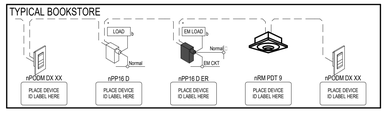

TYPICAL FOR nLIGHT ENABLED LUMINAIRES

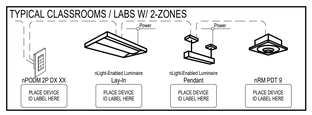

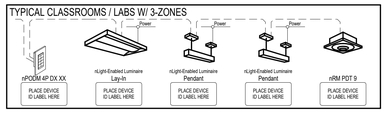

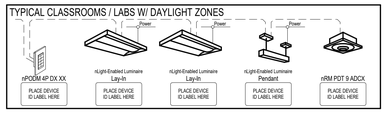

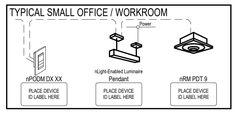

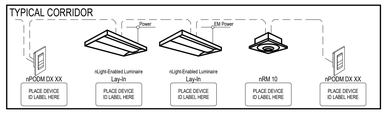

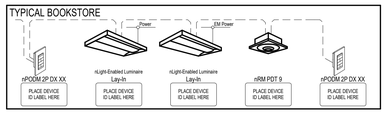

TYPICAL SEQUENCE OF OPERATIONS (INDOOR):

THIS QUOTE PROVIDES FOR THE FOLLOWING SEQUENCE OF OPERATIONS AS APPLICABLE BY SPACE USE:

OFFICES/WORKROOMS : MANUAL-ON, AUTO-OFF VIA OCC. SENSOR. SINGLE-CHANNEL MANUAL OVERRIDE ON/OFF/DIM. TIMECLOCK PROFILE.

CLASSROOMS/STUDIOS/LABS : AUTO-ON VIA OCC. SENSOR., AUTO-OFF VIA OCC. SENSOR. SINGLE-CHANNEL MANUAL OVERRIDE ON/OFF/DIM. TIMECLOCK PROFILE.

CORRIDORS/CIRCULATION : AUTO-ON VIA OCC. SENSOR. DIM TO 50% DURING VACANCY. SINGLE-CHANNEL MANUAL OVERRIDE ON/OFF/DIM. TIMECLOCK PROFILE FOR AUTO-OFF AFTER HOURS.

WAITING AREAS: AUTO-ON VIA OCC. SENSOR. DIM TO 50% DURING VACANCY. SINGLE-CHANNEL MANUAL OVERRIDE ON/OFF/DIM. TIMECLOCK PROFILE.

ALL OTHER INDOOR SPACES (WITH OCCUPANCY SENSOR) : AUTO-ON/OFF VIA OCC. SENSOR. SINGLE-CHANNEL MANUAL OVERRIDE ON/OFF WITH DIMMING PER PLANS. TIMECLOCK PROFILE.

ALL OTHER INDOOR SPACES (WITHOUT OCCUPANCY SENSOR) : SINGLE-CHANNEL MANUAL OVERRIDE ON/OFF WITH DIMMING PER PLANS. TIMECLOCK PROFILE ENABLES LIGHTING DURING TYPICALLY OCCUPIED TIMES. AUTO OFF VIA TIMECLOCK.

DAYLIT ZONES : IN ALL AREAS WHERE LIGHTING POWER WITHIN PRIMARY SIDELIT ZONES EXCEEDS 120W, SUCH LIGHTING SHALL AUTOMATICALLY DIM BASED ON DAYLIGHT CONTRIBUTION TO MAINTAIN DESIGN ILLUMINANCE AND DISTRIBUTION. HOWEVER, LIGHTING IN THESE ZONES SHALL NOT BE INDEPENDENTLY MANUALLY CONTROLLED.

DEMAND RESPONSE : SYSTEM QUOTED IS CAPABLE OF RECEIVING RECEIVING OpenADR 2.0a COMMAND SIGNAL FROM UTILITY DEMAND-RESPONSE-AUTOMATION-SERVER (DRAS) AND REDUCING LIGHTING POWER IN ACCORDANCE WITH CEC T24 PART 6, 130.1(e).

TIMECLOCK & USER SCHEDULES VIA DRY CONTACT(S) : SYSTEM QUOTED PROVIDES DIGITAL ASTRONOMICAL TIMECLOCK. USER PROFILES AND SCHEDULES ARE PROGRAMMED VIA PC COMPUTER CONNECTION AND STORED AT THE GATEWAY(S). OWNER TO PROVIDE DESIRED SCHEDULE PRIOR TO SYSTEM STARTUP.

NOTES:

1. ALL CONTROLLED LIGHTING SHALL BE AUTOMATICALLY SHUT OFF DURING TYPICALLY UNOCCUPIED HOURS. AUTO-OFF VIA OCC. SENSOR AT LOCATIONS WHERE SUCH SENSOR IS PROVIDED.
2. NON-GENERAL CONTROLLED LIGHTING (E.G. TASK) SHALL BE INDEPENDENTLY CONTROLLED AND SHALL NOT AUTOMATICALLY TURN ON VIA OCC. SENSOR.
3. OCCUPANCY SENSOR TIME DELAY SHALL BE 10 MINUTES UNLESS NOTED OTHERWISE.
4. ALL CONTROLLED LIGHTING FIXTURES DESIGNATED FOR PATH OF EGRESS ILLUMINATION AND CONNECTED TO A GENERATOR/INVERTER CIRCUIT SHALL BE CONTROLLED BY CONTROLS THAT, UPON SENSING LOSS OF UTILITY POWER, AUTOMATICALLY BYPASS SUCH CONTROL SO AS TO ENSURE GENERATOR/INVERTER POWER TO REACH THE FIXTURE FOR A MINIMUM 90 CONTINUOUS MINUTES DURING SUCH LOSS OF UTILITY POWER.

SEQUENCE OF OPERATIONS (OUTDOOR):

ALL OTHER LIGHTING: DURING DAYLIT HOURS - LIGHTING OFF. DURING DARK HOURS - ON.

STAND-ALONE (NO TIMECLOCK / NO ADR)

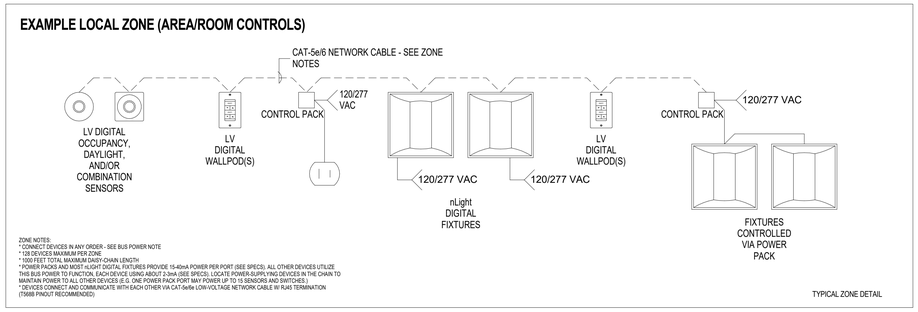

BASIS OF DESIGN: ACUITY NLIGHT LIGHTING CONTROL SYSTEM. COORDINATE FINAL DEVICE QUANTITY AND LOCATIONS WITH ARCHITECT AND ELECTRICAL ENGINEER. FINAL LIGHTING CONTROL DRAWINGS TO BE COORDINATED WITH CONTROLS MANUFACTURER.

NOLL & TAM ARCHITECTS
729 Heinz Avenue
Berkeley, CA 94710
tel 510.542.2200
fax 510.542.2201

ARCHITECTS SEAL

APPROVALS

FILE NUMBER: 07-C1

DIVISION OF THE STATE ARCHITECT
APP# 01-117630
ACS_____FLS_____SSS_____
Date:

PROJECT 2016-0538
CONTACT Hai Phan
INTERFACE ENGINEERING
135 Main Street
Suite 400
San Francisco, CA 94105
TEL 415.489.7240
FAX 415.489.7289
www.interfaceengineering.com

PROJECT TITLE

CONTRA COSTA CCD
D-4002
DVC SAN RAMON CAMPUS EXPANSION & RENOVATION

1690 Watermill Rd.
San Ramon, CA 94582

ISSUE TITLE
INCREMENT 1

ISSUE DATE **11/30/2018**
NOLL & TAM JOB NUMBER **21630**

REVISIONS

NO.	DATE	DESCRIPTION

SHEET TITLE
DETAILS - LIGHTING CONTROLS

SHEET NUMBER
E5.06.1

9/29/2021 2:47:08 PM

GENERAL ABBREVIATIONS:

A	AMPERES
ACP	ACCESS CONTROL PANEL
ACS	ACCESS CONTROL SYSTEM
AFF	ABOVE FINISHED FLOOR
AHJ	AUTHORITY HAVING JURISDICTION
ALS	ASSISTIVE LISTENING SYSTEM
AMP	AMPLIFIER
AOR	ARCHITECT OF RECORD
AUD	AUDIO
AUTO	AUTOMATIC
AUX	AUXILARY
AV	AUDIOVISUAL
AVC	AUDIOVISUAL CONTRACTOR
AVTC	AUDIOVISUAL TERMINAL CABINET
AWG	AMERICAN WIRE GAUGE
BCT	BONDING CONDUCTOR FOR TELECOMMUNICATIONS
BP	BROADCAST PANEL
C	CONDUIT
CAM	CAMERA
CATV	COMMUNITY ANTENNA TELEVISION SYSTEM
CFCI	CONTRACTOR FURNISHED, CONTRACTOR INSTALLED
CFOI	CONTRACTOR FURNISHED, OWNER INSTALLED
CL	CENTERLINE
CP	CONTROL PANEL
CPU	COMPUTER
CS	CONDUIT STUB
CSA	CHARLES SALTER ASSOCIATES
DA	DISTRIBUTION AMPLIFIER
DGP	DATA GATHERING PANEL
DIV	DIVISION
DMA	DOOR MANAGEMENT ALARM
DOC	DOCUMENT CAMERA
DP	PANEL DISPLAY
DS	DIGITAL SIGNAGE
DSP	DIGITAL SIGNAL PROCESSOR
DVI	DIGITAL VISUAL INTERFACE
E	EXISTING (E)
EC	ELECTRICAL CONTRACTOR
ECS	EMERGENCY COMMUNICATION SYSTEM
EF	ENTRANCE FACILITY FOR TELECOMMUNICATIONS (MPOE)
EMT	ELECTRICAL METALLIC TUBING
ER	EQUIPMENT ROOM
EXT	EXTERIOR
F	FUTURE (F)
FACP	FIRE ALARM CONTROL PANEL
FATC	FIRE ALARM TERMINAL CABINET
FB	FLOOR BOX
FO	FIBER OPTIC
FOV	FIELD OF VIEW
GC	GENERAL CONTRACTOR
GE	GROUNDING EQUALIZER
HDBT	HD BASE-T
HDMI	HIGH DEFINITION MULTIMEDIA INTERFACE
IC	INTERCOM
IDF	INTERMEDIATE DISTRIBUTION FRAME
IDS	INTRUSION DETECTION SYSTEM
INT	INTERIOR
IP	INTERNET PROTOCOL
IR	INFRARED
IT	INFORMATION TECHNOLOGY
JB	JUNCTION BOX
L	LEFT AUDIO
LS	LOUDSPEAKER
LVC	LOW VOLTAGE CONTROLLER
MATV	MASTER ANTENNA TELEVISION
MDF	MAIN DISTRIBUTION FRAME
MIC	MICROPHONE
MM	MULTIMODE
MPOE	MINIMUM POINT OF ENTRY
N	NEW (N)
NC	NORMALLY CLOSED
NET	NETWORK
NIC	NOT IN CONTRACT
NO	NORMALLY OPEN
NTS	NOT TO SCALE
OC	ON CENTER
OFCI	OWNER FURNISHED, CONTRACTOR INSTALLED
OFE	OWNER FURNISHED EQUIPMENT
OFOI	OWNER FURNISHED, OWNER INSTALLED
OSP	OUTSIDE PLANT
P	PAGING LOUDSPEAKER
PB	PULL BOX
PIR	PASSIVE INFRARED
PNL	PANEL
POE	POWER OVER ETHERNET
PPP	PORT PATCH PANEL
PR	PAIR OF CONDUCTORS
PROJ	PROJECTOR
PT	POKE THROUGH DEVICE
PTZ	PAN TILT ZOOM
PVC	POLYVINYL CHLORIDE
PWR	POWER
R	RIGHT AUDIO
RCP	REFLECTIVE CEILING PLAN
REX	REQUEST TO EXIT
RMC	RIGID METALLIC CONDUIT
RX	RECEIVER
S	LOUDSPEAKER
SAD	SEE ARCHITECTURAL DRAWINGS
SC	PROJECTOR SCREEN CONTROL
SCRN	PROJECTION SCREEN
SDI	SERIAL DIGITAL INTERFACE
SED	SEE ELECTRICAL DRAWINGS
SEH	SECURITY EQUIPMENT HUB
SM	SINGLE MODE
SMS	SECURITY MANAGEMENT SYSTEM
SPD	SURGE PROTECTION DEVICE
SR	SURROUND REAR LOUDSPEAKER
SS	SURROUND SIDE LOUDSPEAKER
STP	SHIELDED TWISTED PAIR
STR	STRANDS (OF FIBER)
SUB	SUBWOOFER LOUDSPEAKER
SY	SECURITY
SYS	SYSTEM
TB	TABLE BOX
TBB	TELECOMMUNICATIONS BONDING BACKBONE
TELCO	TELEPHONE COMPANY
TGB	TELECOMMUNICATIONS GROUNDING BUS BAR
TMGB	TELECOMMUNICATIONS MAIN GROUNDING BUS BAR
TP	TOUCH PANEL
TR	TELECOM ROOM (IDF)
TY	SECURITY
TYP	TYPICAL
UL	UNDERWRITERS LABORATORIES
UON	UNLESS OTHERWISE NOTED
UPS	UNINTERRUPTIBLE POWER SUPPLY
UTP	UNSHIELDED TWISTED PAIR
V	VOLTS
VAC	VOLTS, ALTERNATING CURRENT
VC	VOLUME CONTROL
VDA	VIDEO DISTRIBUTION AMPLIFIER
VDC	VOLTS, DIRECT CURRENT
VMS	VIDEO MATRIX SWITCH
VP	VIDEO PROJECTOR
VSS	VIDEO SURVEILLANCE SYSTEM
WB	WALL BOX
WM	WIRELESS MICROPHONE RECEIVER ANTENNA
WP	WEATHERPROOF

TECHNOLOGY GENERAL NOTES:

GENERAL

1. ANY SHEET NOTES OR OTHER CALLOUTS IN THESE DRAWINGS THAT ASSIGN RESPONSIBILITY OF WORK TO SPECIFIC DIVISIONS ARE TO BE CONSIDERED AS A RECOMMENDATION ONLY.
2. REFER TO PROJECT MANUAL DIVISIONS 27 AND 28 FOR PROJECT SCOPE, PRODUCT SPECIFICATIONS, AND INSTALLATION REQUIREMENTS.
3. UNLESS OTHERWISE SPECIFICALLY DIMENSIONED, THESE DRAWINGS REPRESENT APPROXIMATE LOCATIONS OF DEVICES ONLY. REFER TO ARCHITECTURAL DRAWINGS FOR ADDITIONAL INFORMATION.
4. COMPLY WITH ADA REQUIREMENTS FOR MOUNTING HEIGHTS OF DEVICES.
5. REFER TO DIVISION 26 FOR POWER AND LIGHTING REQUIREMENTS.
6. REFER TO DIVISION 23 FOR COOLING REQUIREMENTS.

CONDUIT & BOXES

1. REFER TO DIVISION 26 FOR SCOPE REQUIREMENTS RELATED TO CONDUIT, JUNCTION BOXES, AND OTHER CONDUIT TERMINAL BOXES WHERE NOT ADDRESSED SPECIFICALLY IN THESE DRAWINGS.
2. CONDUIT ROUTING ON PLANS IS DIAGRAMMATIC. COORDINATE WITH OTHER TRADES PRIOR TO INSTALLATION TO AVOID CONFLICT.
3. PROVIDE PULL STRINGS IN CONDUITS. LABEL CONDUITS THAT ARE STUBBED-OUT, OR AT TERMINATION BOXES, INDICATING DESTINATION ROOM AT OPPOSITE END. LABELING CONDUIT BOXES IS NOT REQUIRED FOR CONDUIT STUBBED UP ABOVE CEILING.
4. PAINT BOXES AND LAST 12 INCHES OF ACCESSIBLE CONDUIT INSTALLED FOR LOW-VOLTAGE CIRCUITS A DISTINCTIVE AND DIFFERENT COLOR FROM OTHER TRADES' CONDUIT AND BOXES.
5. MAXIMUM TOTAL DEGREE OF SWEEP TYPE BENDS IN CONDUIT BETWEEN PULL POINTS IS 180 DEGREES. ADD PULL BOXES AS REQUIRED TO MEET THIS REQUIREMENT. MAKE BENDS BEFORE OR AFTER PULL BOXES. DO NOT CHANGE DIRECTION OF CONDUITS WITHIN PULL BOXES.
6. DO NOT USE JUNCTION BOXES OR PULL BOXES AS PATH TURNS FOR ANY STRUCTURED CABLING.
7. MARK AND COLOR-CODE JUNCTION BOXES AND TERMINAL CABINETS WITH THEIR BOX SCHEDULE NUMBER ON THE INSIDE OF THE BOX FACING THE ROOM, SUCH THAT THEY REMAIN IDENTIFIABLE AFTER CLOSURE OF WALLS.
8. PROVIDE 1-INCH CONDUIT TO TELECOMMUNICATIONS 4-11/16-INCH BACK BOXES; BOXES TO BE 3-INCH DEEP WITH SINGLE-GANG MUD RING UNLESS OTHERWISE NOTED.
9. REFER TO ARCHITECTURAL AND/OR ELECTRICAL DRAWINGS FOR ANY REQUIRED TECHNOLOGY-RELATED ACOUSTICAL MEASURES REGARDING CONDUIT PENETRATIONS, ELECTRICAL BOX SEALANT PADS, AND GYPSUM BOARD BOX-OUTS FOR LOUDSPEAKERS AND LARGE BOXES, ETC.
10. UNLESS OTHERWISE SHOWN OR NOTED, FLEXIBLE CONDUIT SHALL NOT BE USED WITHOUT TECHNOLOGY CONSULTANT'S WRITTEN APPROVAL.
11. FOR CONDUITS WITH INTERNAL DIAMETERS OF 2 INCHES OR LESS, THE INSIDE BEND RADIUS OF A BEND IN CONDUIT SHALL BE AT LEAST 6 TIMES THE CONDUIT INTERNAL DIAMETER. FOR CONDUITS WITH AN INTERNAL DIAMETER OF MORE THAN 2 INCHES, THE INSIDE RADIUS OF A BEND IN CONDUIT SHALL BE AT LEAST 10 TIMES THE CONDUIT INTERNAL DIAMETER.
12. PROVIDE A MINIMUM OF ONE 1-1/4-INCH CONDUIT TO EACH FLOOR BOX FOR TELECOM THAT IS SEPARATE FROM CONDUITS REQUIRED FOR AV AND POWER, UON.
13. INSTALL SEPARATE CONDUITS TO EACH FLOOR BOX. DO NOT PASS THROUGH ONE FLOOR BOX TO ACCESS ANOTHER BOX, UON.

PROCESS

1. REPORT ANY OBSERVATIONS OR CONDITIONS AT TIME OF DISCOVERY THAT PREVENT THE CORRECT INSTALLATION OF THE DESIGNED SYSTEM ACCORDING TO THE DRAWINGS AND SPECIFICATIONS.
2. SUBMIT REQUESTS-FOR-INFORMATION (RFI) THROUGH THE DIVISION 01 PRESCRIBED COMMUNICATIONS PROTOCOL.
3. WHEN AN APPARENT CONFLICT EXIST BETWEEN LOW-VOLTAGE DISCIPLINES AND OTHER DISCIPLINES, RESOLVE THROUGH RFI PROCESS.
4. CREATE AND SUBMIT SHOP DRAWINGS SHOWING BACK BOX AND CONDUIT COORDINATION FOR DIVISIONS 27 AND 28.
5. INSTALLATION OF FLOOR BOXES IS DIVISION 26 SCOPE. COORDINATE FLOOR BOX REQUIREMENTS AS DETAILED IN THESE DOCUMENTS WITH OTHER DISCIPLINES AND NOTIFY THROUGH RFI PROCESS WHERE CONFLICTS OR REDUNDANCY MAY OCCUR.
6. VERIFY LOCATION OF FLOOR BOXES WITH ARCHITECT/OWNER REPRESENTATIVE PRIOR TO INSTALLATION.
7. NOTIFY ARCHITECT OF THE INTENT TO CLOSE WALLS AND CEILINGS, A MINIMUM OF FIVE WORKING DAYS PRIOR TO CLOSURE, AND REQUEST SITE OBSERVATIONS FOR EACH DISCIPLINE AFFECTED.
8. UNLESS OTHERWISE PROVIDED IN ARCHITECTURAL, STRUCTURAL, OR TECHNOLOGY DRAWINGS, PROVIDE TECHNOLOGY DEVICE STRUCTURAL ATTACHMENT DETAIL SHOP DRAWINGS PREPARED, STAMPED, AND SIGNED BY A STRUCTURAL ENGINEER LICENSED IN THE PROJECT JURISDICTION.

AC POWER & GROUNDING

1. AC POWER CIRCUITS AND RECEPTACLES ARE SHOWN FOR REFERENCE ONLY. SEE ELECTRICAL DRAWINGS FOR SCOPE-OF-WORK AND SPECIFIC CIRCUIT ASSIGNMENTS. WHERE A CONFLICT EXISTS BETWEEN THE ELECTRICAL DRAWINGS AND THE TECHNOLOGY DRAWINGS, RECONCILE THROUGH RFI PROCESS.
2. MAINTAIN A MINIMUM 12-INCH SEPARATION BETWEEN TECHNOLOGY SIGNAL CONDUITS AND PARALLEL AC POWER CONDUITS. AC POWER CONDUITS CROSSING TECHNOLOGY SIGNAL CONDUITS SHOULD DO SO AT PERPENDICULAR ANGLES WITH A MINIMUM OF 1-INCH CLEARANCE.
3. LOCATE TECHNOLOGY INSTALLATIONS A MINIMUM OF 6 FEET AWAY FROM TRANSFORMERS, INVERTERS, AND MOTORS.
4. NO LOADS SUCH AS MOTORS, TRANSFORMERS, BALLASTED LIGHTING, OR UTILITY CIRCUITS SHALL BE SERVED BY AC POWER PANELS INTENDED FOR LOW-VOLTAGE TECHNOLOGY EQUIPMENT USE. NOTIFY THE ARCHITECT OR OWNER REPRESENTATIVE IN THE EVENT OF A CONFLICT WITH THE PANELBOARD SCHEDULE.
5. BUS BAR SHALL BE BONDED TO BUILDING STRUCTURAL STEEL. REFER TO BONDING RISER DRAWING FOR ADDITIONAL GROUNDING AND BONDING INFORMATION.
6. INSTALL BONDING CONDUCTORS WITH AS FEW BENDS AS POSSIBLE. WHEN A BEND IS NECESSARY, THE BEND SHALL BE INSTALLED AS A GRADUAL BEND WITH NO SHARP ANGLES KINKING THE CONDUCTOR.

AUDIOVISUAL INFRASTRUCTURE NOTES:

1. AUDIOVISUAL EQUIPMENT AND ELECTRICAL OUTLETS ADJACENT TO AV JUNCTION BOXES SHALL BE SERVED BY 120-VOLT AC CIRCUITS, WHICH ARE DEDICATED SOLELY TO AV USE. ALL CIRCUITS SHALL HAVE DEDICATED GROUNDED CONDUCTORS (I.E. NO COMMON "ROUND-HOUSE NEUTRAL") AND INSULATED EQUIPMENT GROUNDING CONDUCTORS.
2. BOND AC POWER DISTRIBUTION PANELS SERVING AUDIOVISUAL SYSTEM SUB-PANELS TO BUILDING SERVICE GROUND WITH CONTINUOUS INSULATED LOW-IMPEDANCE WIRE.
3. ALL AV CONDUITS ARE TO BE 3/4-INCH UNLESS OTHERWISE NOTED.
4. VERIFY THAT AUDIOVISUAL EQUIPMENT RACKS IN CLOSETS AND MILLWORK ARE PROPERLY VENTILATED.
5. UNLESS OTHERWISE PROVIDED IN ARCHITECTURAL, STRUCTURAL, OR AUDIOVISUAL DRAWINGS, PROVIDED TECHNOLOGY DEVICE STRUCTURAL ATTACHMENT DETAIL SHOP DRAWINGS PREPARED, STAMPED, AND SIGNED BY A STRUCTURAL ENGINEER LICENSED IN THE PROJECT JURISDICTION.
6. SEE PROJECT SPECIFICATIONS FOR REQUIREMENTS FOR PROJECTION SCREENS, PROJECTOR LIFTS, AND PROJECTOR MOUNTS.
7. AV CONDUITS SHALL BE TERMINATED WITH JUNCTION BOXES, PULL-BOXES, OR TERMINAL CABINETS AT BOTH ENDS, UNLESS OTHERWISE NOTED. CONDUITS TERMINATED AS "STUBS" SHOULD BE DE-BURRED AND FITTED WITH BUSHINGS.

TELECOMMUNICATIONS GENERAL NOTES:

1. ALL WORK SHALL BE PROVIDED BY DIVISION 27 UNLESS OTHERWISE NOTED.
2. GRAPHICAL REPRESENTATION OF HARDWARE AND EQUIPMENT IS FOR INFORMATION AND NOT INTENDED TO SHOW EXACT QUANTITIES. CONTRACTOR SHALL SUPPLY SUFFICIENT QUANTITY TO TERMINATE ALL CABLING. PROVIDE ONE SPARE TERMINATION UNIT (BLOCK, PATCH PANEL, ETC.) IN EACH TELECOM ROOM.
3. NETWORK DROPS FOR AUDIOVISUAL AND SECURITY SYSTEMS THAT ROUTE BACK TO A TELECOM ROOM SHALL BE INSTALLED BY STRUCTURED CABLING CONTRACTOR. REFER TO THOSE DISCIPLINE DRAWINGS FOR OTHER INFORMATION.
4. TELECOMMUNICATIONS SYSTEM INSTALLATION CONTRACTOR IS RESPONSIBLE FOR ALL DATA CABLING TO BE INSTALLED TO TELECOM ROOMS.
5. FOR VOICE CIRCUITS IN ELEVATORS, ROUTE A 1-INCH CONDUIT FROM ELEVATOR EQUIPMENT ROOM TERMINATION LOCATION TO THE NEAREST TELECOM ROOM. COORDINATE WITH ELEVATOR INSTALLER FOR LOCATION OF CONDUIT TERMINATION POINT.
6. INSTALL BONDING CONDUCTORS WITH AS FEW BENDS AS POSSIBLE. WHEN A BEND IS NECESSARY, INSTALL AS A GRADUAL BEND WITH NO SHARP ANGLES KINKING THE CONDUCTOR.
7. ALL PULL BOXES SHALL BE HINGED AND LATCHABLE.
8. REFER TO APPROPRIATE ELECTRICAL OR FIRE ALARM DRAWINGS FOR FIRE PANEL LOCATION. PROVIDE CABLING FOR CONNECTIVITY NECESSARY TO CONNECT COMMUNICATION CIRCUITS.
9. FRAME AND FINISH CABLE TRAY PENETRATIONS THROUGH PARTITIONS. INSTALL UL LISTED FIRE STOP SYSTEMS FOR PARTITION PENETRATIONS THAT MAINTAIN FIRE RATING OF PARTITIONS. REFER TO DIVISION 07.
10. FRAME AND FINISH PARTITION OPENINGS WITH A MINIMUM 2-INCH CLEARANCE AROUND CABLE TRAY OPENINGS. REFER TO DIVISION 09 FOR PARTITION FINISH REQUIREMENTS.
11. INSTALL FLAT SMOOTH BOTTOM CABLE TRAY OVER INACCESSIBLE PORTIONS OF CEILINGS AND ABOVE LIGHT FIXTURES. PROVIDE ACCESS HATCHES AT A MAXIMUM OF EVERY 20 FEET OF INACCESSIBLE TRAY STRAIGHT RUNS, AND IN HARD CEILINGS AT ALL 90 DEGREE BENDS IN TRAYS.
12. TELECOM ROOM FLOORS SHALL BE ANTI-STATIC TREATED AND SEALED. REFER TO DIVISION 09.
13. INSTALL SIX-CELL FABRIC INNERDUCT IN 3-INCH AND 4-INCH CONDUITS. INSTALL THREE-CELL FABRIC INNERDUCT IN 2-INCH CONDUITS. TIE OFF INNERDUCT AT BOTH CONDUIT ENDS. ALL WORK SHALL BE PROVIDED BY DIVISION 27 UNLESS OTHERWISE NOTED.
14. MAXIMUM PERMANENT LINK CABLE LENGTH IS 90 METERS. SHOULD CONTRACTOR BELIEVE ANY RUN WILL EXCEED 90 METERS, SUBMIT AN RFI FOR COORDINATION WITH TELECOMMUNICATIONS DESIGN CONSULTANT TO DETERMINE OPTIMUM ROUTING PRIOR TO INSTALLATION OF CABLE.
15. CABLE WIRELESS ACCESS POINTS WITH TWO CATEGORY-6A RATED CABLES, UNLESS OTHERWISE NOTED.
16. COORDINATE WITH FURNITURE MANUFACTURER TO CLARIFY CABLE TERMINATION LOCATIONS. IF CABLES TERMINATE IN FURNITURE, PROVIDE POKE-THROUGHS OR FLOOR BOXES AS PASS-THROUGHS, AS APPROPRIATE, TO CABLE MANAGEMENT IN FURNITURE. PROTECT CABLING WITH LIQUID TIGHT FLEXIBLE CONDUIT WHIPS INTO FURNITURE WHERE CABLING WOULD OTHERWISE BE EXPOSED.
17. UNLESS OTHERWISE PROVIDED IN ARCHITECTURAL, STRUCTURAL, OR TELECOM DRAWINGS, PROVIDE TECHNOLOGY DEVICE STRUCTURAL ATTACHMENT DETAIL SHOP DRAWINGS PREPARED STAMPED, AND SIGNED BY A STRUCTURAL ENGINEER LICENSED IN THE PROJECT JURISDICTION.

SHEET INDEX

SHEET NUMBER	SHEET NAME
T0.00.0	TECHNOLOGY NOTES AND ABBREVIATIONS
T0.01.0	TECHNOLOGY SYMBOLS AND LEGENDS
T1.01.1	LEVEL 1 PLAN - WEST BUILDING
T1.02.1	LEVEL 1 PLAN - EAST BUILDING
T1.03.1	LEVEL 2 PLAN - WEST BUILDING
T1.04.1	LEVEL 2 PLAN - EAST BUILDING
T4.01.0	ELEVATIONS
T4.02.1	ENLARGED CADAVER LAB AND CLASSROOM PLANS
T7.01.0	DETAILS - SECURITY
T7.02.0	DETAILS - TELECOM & AUDIOVISUAL
T7.03.0	DETAILS - AUDIOVISUAL
T7.04.0	AV JUNCTION BOX SCHEDULE, CONDUIT AND CABLE DIAGRAMS

Grand total: 12

SECURITY GENERAL NOTES:

1. ALL WORK SHALL BE PROVIDED BY DIVISION 28 UNLESS OTHERWISE NOTED.
2. REFER TO PROJECT MANUAL DIVISION 28 FOR PROJECT SCOPE, PRODUCT SPECIFICATIONS, AND INSTALLATION REQUIREMENTS.
3. POWER SYMBOLS SHOWN ON SECURITY PLANS ARE FOR REFERENCE ONLY. SEE ELECTRICAL DRAWINGS AND REFER TO PROJECT MANUAL DIVISION 26 FOR SPECIFIC REQUIREMENTS.
4. COORDINATE WITH DIVISION 08 LOCKING HARDWARE CONTRACTOR ON CONNECTING CABLES TO ELECTRIC POWER TRANSFER HINGES AND ELECTRIC LOCKING HARDWARE CONTROLLED BY SECURITY SYSTEM.
5. CONNECT SECURITY SYSTEMS TO EMERGENCY POWER SOURCE ONLY. DEVIATIONS FROM THIS REQUIRES WRITTEN APPROVAL FROM OWNER AND ARCHITECT-OF-RECORD.
6. REPORT FIRE RATED ASSEMBLIES, NOT FACTORY PREPPED FOR SECURITY DEVICES, TO GENERAL CONTRACTOR FOR COORDINATION AND ACCEPTABLE SOLUTION.
7. ALL EXISTING DOORS WITH NEW ACCESS CONTROL HARDWARE SHALL BE WIRELESS AND BATTERY-OPERATED. ALL NEW DOORS SHALL BE HARD-WIRED ACCESS CONTROL DEVICES.

THESE DRAWINGS CONSTITUTE PROPRIETARY INFORMATION AND ARE THE PROPERTY OF CHARLES M. SALTER ASSOCIATES, INC. THE USE OF THIS INFORMATION IS LIMITED TO THIS PROJECT AND CANNOT BE DUPLICATED IN WHOLE OR IN PART, NOR DISCLOSED TO OTHERS, WITHOUT THE WRITTEN CONSENT OF CHARLES M. SALTER ASSOCIATES, INC. © 2017

NOLL & TAM ARCHITECTS
729 Heinz Avenue
Berkeley, CA 94710
tel 510.542.2200
fax 510.542.2201

ENGINEERING SEAL

LICENSED ARCHITECT
RYAN GNUSTI RASKOP
C-35434
RENEW: 10/31/2019
STATE OF CALIFORNIA

APPROVALS

FILE NUMBER: 07-C1
DIVISION OF THE STATE ARCHITECT
APP# 01-117630
ACS_____FLS_____SSS_____
Date:

Charles M. Salter ASSOCIATES INC

PROJECT TITLE

CONTRA COSTA CCD
D-4002
DVC SAN RAMON CAMPUS EXPANSION & RENOVATION

1690 Watermill Rd.
San Ramon, CA 94582

ISSUE TITLE

INCREMENT 1 - RENOVATION

ISSUE DATE 10/25/18

NOLL & TAM JOB NUMBER 21630

REVISIONS

	DATE	DESCRIPTION

SHEET TITLE

TECHNOLOGY NOTES AND ABBREVIATIONS

SHEET NUMBER

T0.00.0

9/29/2021 1:25:54 PM 16-0833_DVC San Ramon Expansion_19_INC1_detached.rvt

SHEET REFERENCE CONVENTIONS:

1 — NUMBERED SHEET NOTE. ONLY APPLIES TO SHEET ON WHICH NOTE IS FOUND.

ELEVATION NUMBER / X / X.XX / SHEET NUMBER — ELEVATION REFERENCE

SECTION NUMBER / X / X.XX / SHEET NUMBER — SECTION REFERENCE

DETAIL NUMBER / X / X.XX / SHEET NUMBER — DETAIL REFERENCE OR CALL-OUT

ELECTRICAL POWER AND CONDUIT SYMBOLS:

- DOUBLE DUPLEX PLACEHOLDER FOR POWER. REFER TO ELECTRICAL DOCUMENTS FOR SPECIFICS.
- DUPLEX PLACEHOLDER FOR POWER. REFER TO ELECTRICAL DOCUMENTS FOR SPECIFICS.
- SPECIAL PURPOSE PLACEHOLDER FOR POWER. REFER TO ELECTRICAL DOCUMENTS FOR SPECIFICS.
- CONDUIT, UNDERGROUND OR UNDERSLAB
- CONDUIT, TURNED UP
- CONDUIT, TURNED DOWN

JUNCTION BOX SYMBOLS:

TAG	JUNCTION BOX TAG - REFER TO SCHEDULE FOR REQUIREMENTS
S	CEILING MOUNTED SPEAKER
	VIDEO PROJECTOR
	PROJECTOR SCREEN
	FLAT PANEL DISPLAY
	FLAT PANEL MOUNT
	TABLE TOP MICROPHONE
	TABLE TOP INPUT LOCATION
	TOUCH SCREEN CONTROLLER

JUNCTION BOX TAGS:

ALS	ASSISTIVE LISTENING SYSTEM
AV	AUDIOVISUAL INTERFACE
AVTC	AUDIOVISUAL TERMINAL CABINET
BP	BROADCAST PANEL
CM	CAMERA
CP	CONTROL PANEL
CS	CONDUIT STUB
DC	DOCUMENT CAMERA
DP	FLAT PANEL DISPLAY
DS	DIGITAL SIGNAGE
FB	FLOOR BOX
IC	INTERCOM
LS	LOUDSPEAKER
MIC	MICROPHONE
P	PAGING LOUDSPEAKER
PB	PULL BOX
PT	POKE THROUGH DEVICE
S	CEILING LOUDSPEAKER
SC	PROJECTION SCREEN CONTROL PANEL
SCRN	PROJECTION SCREEN CASE
SR	SURROUND REAR LOUDSPEAKER
SS	SURROUND SIDE LOUDSPEAKER
SUB	SUBWOOFER LOUDSPEAKER
TB	TABLE BOX
TP	TOUCH PANEL
VP	VIDEO PROJECTOR
WM	WIRELESS MICROPHONE RECEIVER ANTENNA

AUDIOVISUAL SYMBOLS:

TAG — JUNCTION BOX TAG - REFER AV JUNCTION BOX SCHEDULE FOR REQUIREMENTS, AV HARDWARE AN ELECTRONICS ARE NOT IN CONTRACT

FUNCTIONAL SYMBOLS:

- TRANSMITTER, WIRELESS DEVICE
- RECEIVER, WIRELESS DEVICE
- INPUT RECEPTACLE FACEPLATE
- OUTPUT RECEPTACLE FACEPLATE
- INPUT J-BOX (NO PLATE)
- OUTPUT J-BOX (NO PLATE)
- WIRE BUNDLE

EXAMPLE 1:

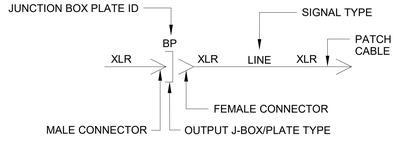

EXAMPLE 2:

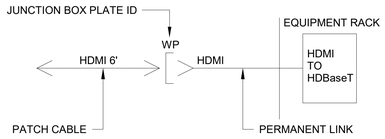

FUNCTIONAL ABBREVIATIONS:

ALS	ASSISTIVE LISTENING SYSTEM
DSP	AUDIO DIGITAL SIGNAL PROCESSOR
IR	INFRARED
NET	NETWORK
RX	RECEIVER
VMS	VIDEO MATRIX SWITCH

FUNCTIONAL CONVENTIONS:

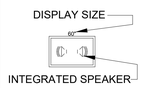

VIDEO DISPLAY

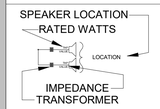

SPEAKER, HIGH-IMPEDANCE SYSTEM

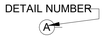

REFERENCE WITHIN A SHEET

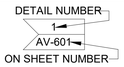

REFERENCE FROM OTHER SHEET

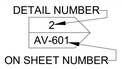

REFERENCE TO OTHER SHEET

MALE CONNECTOR

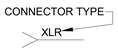

FEMALE CONNECTOR

SECURITY SYMBOLS:

C	CONTACT
CR	CARD READER (W/ DOOR CONTACT AND REX SWITCH)
DB	DURESS BUTTON
ED	EXIT DEVICE
EL	ELECTRIC LOCKSET
ES	ELECTRIC STRIKE
EX	ELECTRIC EXIT DEVICE
GS	GLASS BREAK SENSOR
KP	KEYPAD
IL	INTEGRATED ELECTRONIC LOCK
MD	MOTION DETECTOR
OP	DOOR OPERATOR
PB	PUSH BUTTON
R	REMOTE DOOR UNLOCK PUSHBUTTON
DH	DOOR HOLDER
PS	POWER SUPPLY
SP	SECURITY PANEL
REX	REQUEST TO EXIT SENSOR
ENS	EMERGENCY NOTIFICATION SPEAKER
X	SECURITY COMMUNICATIONS STATION I=INTERCOM E=EMERGENCY CALL STATION M=MASTER STATION
DM	DOOR MANAGEMENT ALARM
EE	EMERGENCY EXIT ALARM
	SECURITY WORKSTATION

CAMERA SYMBOLS:

FXD	FIXED CAMERA (REFER TO SPECIFICATIONS FOR LENS TYPE)
	PINHOLE COVERT CAMERA
PTZ	PAN TILT ZOOM CAMERA
	DOME CAMERA
	MULTI-IMAGER CAMERA

CAMERA SYMBOLS LEGEND:

INC 1 SECURITY CAMERA SCHEDULE

TAG	FOV	Family	Resolution	Mounting
C1.1	60.00°	Camera - Dome	1080p	CEILING
C1.2	180.00°	Camera - Dome	5MP	CEILING
C1.3	180.00°	Camera - Dome	5MP	CEILING
C1.4	180.00°	Camera - Dome	5MP	CEILING
C1.5	180.00°	Camera - Dome	5MP	WALL
C1.6	360.00°	Camera - Dome	5MP	CEILING
C1.7	90.00°	Camera - Dome	1080p	CEILING
C1.8	30.00°	Camera - Dome	1080p	CEILING
C1.9	180.00°	Camera - Dome	5MP	CEILING
C1.10	90.00°	Camera - Dome	1080p	CEILING
C1.11	180.00°	Camera - Dome	5MP	WALL
C1.12	90.00°	Camera - Dome	1080p	CEILING
CNS		Junction Backbox		
CNS		Junction Backbox		
CNS		Junction Backbox		
CNS		Junction Backbox		
CNS		Junction Backbox		
CNS		Junction Backbox		
CNS		Junction Backbox		

5

TELECOMMUNICATION SYMBOLS:

W	FLUSH WALL PHONE RECEPTACLE AT 48" AFF OR AS REQUIRED BY ADA
	FLUSH DATA-ONLY FURNITURE RECEPTACLE
	FLUSH DATA-ONLY WALL RECEPTACLE
	FLUSH WIRELESS ACCESS POINT WALL RECEPTACLE
	FLUSH DATA-ONLY FLOOR RECEPTACLE
	FLUSH DATA OUTLET CEILING MOUNTED RECEPTACLE
	FLUSH WIRELESS ACCESS POINT CEILING RECEPTACLE
	WALL MOUNTED ENCLOSURE SIZE AND PURPOSE AS NOTED ON DRAWING
	SURFACE MOUNTED RACEWAY BY OTHERS
---//---//	SURFACE MOUNTED RACEWAY TO BE DEMOLISHED
	CABLE TRAY, SIZE AS NOTED ON PLAN
	CABLE RUNWAY, SIZE AS NOTED ON PLAN

KEYNOTE LEGEND:

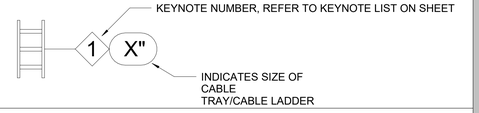

SYMBOL LEGEND:

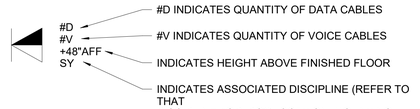

TELECOMMUNICATION RESPONSIBILITY MATRIX:

SCOPE ITEM	CFCI	CFOI	OFOI	OFCI
TELECOM ROOM FIT-OUT				
RACKS/CABINETS	X			
VERTICAL CABLE MANAGERS	X			
HORIZONTAL CABLE MANAGERS	X			
PATCH PANELS	X			
NETWORK SWITCHES			X	
UPS			X	
LADDER RACKING	X			
PLYWOOD	X			
GROUNDING BUSBAR	X			
POWER	X			
LIGHTING	X			
PATHWAYS				
CORRIDOR CABLE TRAY	X			
CONDUIT & BACKBOXES	X			
UNDERGROUND CONDUIT	X			
HORIZONTAL CABLING, JACKS, WALL PLATES	X			
WIRELESS ACCESS POINT CABLING	X			
WIRELESS ACCESS POINT DEVICES			X	
INTER-BUILDING COPPER AND/OR FIBER CABLING	X			
INTRA-BUIDLING BACKBONE (RISER) CABLING	X			
BUILDING ENTRANCE TERMINALS	X			

NOLL & TAM ARCHITECTS
729 Heinz Avenue
Berkeley, CA 94710
tel 510.542.2200
fax 510.542.2201

ENGINEERING SEAL

LICENSED ARCHITECT — RYAN GNUSTI RASKOP — C-35434 — RENEW: 10/31/2019 — STATE OF CALIFORNIA

APPROVALS

FILE NUMBER: 07-C1

DIVISION OF THE STATE ARCHITECT

APP# 01-117630

ACS_____ FLS_____ SSS_____

Date:

Charles M. Salter ASSOCIATES INC

PROJECT TITLE

CONTRA COSTA CCD
D-4002
DVC SAN RAMON CAMPUS EXPANSION & RENOVATION

1690 Watermill Rd.
San Ramon, CA 94582

ISSUE TITLE

INCREMENT 1 - RENOVATION

ISSUE DATE 10/25/18

NOLL & TAM JOB NUMBER 21630

REVISIONS

#	DATE	DESCRIPTION
5	11/05/2019	AV SYSTEMS DRAWINGS

SHEET TITLE

TECHNOLOGY SYMBOLS AND LEGENDS

SHEET NUMBER

T0.01.0

9/29/2021 1:29:57 PM 16-0633_DVC San Ramon Expansion_19_INC1_detached.rvt

1 LEVEL 1 ENLARGED PLAN - WEST BUILDING
1/8" = 1'-0"

SHEET NOTES

A.	USE EXISTING CABLING CONVEYANCE SYSTEMS FOR ALL NEW TELECOMMUNICATIONS STRUCTURED CABLING
B.	ALL ACTIVE AV EQUIPMENT INCLUDING LOUDSPEAKERS, DISPLAYS, AND PROJECTORS ARE NOT IN CONTRACT, OFOI
C.	PROTECT ALL EXISTING CABLING IN-PLACE. ALL DEVICE LOCATIONS ON PLANS ARE NEW AND WILL USE NEW CABLING
D.	STUB CONDUITS TO EXISTING TELECOM CONVEYANCE SYSTEMS FROM ALL NEW TELECOMMUNICATIONS OUTLET DEVICE JUNCTION BOXES
E.	TEST ALL EXISTING CABLING IN ROOMS WHERE EXISTING CABLING HAS BEEN PROTECTED IN-PLACE. PROVIDE TEST RESULTS AS OUTLINED IN THE SPECIFICATIONS
F.	EXISTING EQUIPMENT AND HARDWARE WILL BE REMOVED BY CAMPUS. REMAINING EQUIPMENT, LOUDSPEAKERS, OR OTHER HARDWARE NOT REMOVED BY THE CAMPUS SHALL BE PROTECTED IN-PLACE
G.	REFER TO DOOR HARDWARE SCHEDULE FOR ELECTRONIC LOCK HARDWARE. ALL EXISTING RETROFIT DOORS WITH ELECTRONIC LOCKS SHALL BE BATTERY OPERATED. NEW DOORS WILL BE HARD-WIRED. PROVIDE WIRING TYPE AND QUANTITIES AS REQUIRED BY THE DOOR HARDWARE SCHEDULE AND HARDWARE GROUP INFORMATION
H.	INTEGRATE ALL NEW SECURITY PRODUCTS WITH EXISTING SECURITY INFRASTRUCTURE IN EXISTING TELECOM ROOMS. ROUTE SECURITY CABLING TO NEAREST TELECOM ROOM. COORDINATE WITH DISTRICT IT FOR MORE INFORMATION
I.	"CNS" SPEAKERS ARE SHOWN FOR COORDINATION ONLY. IF CNS SPEAKERS ARE EXISTING IN ROOM, REMOVE AND REINSTALL THE CNS SPEAKER. IF CNS SPEAKERS ARE NOT INSTALLED IN THE ROOM, INSTALL NEW JUNCTION BOX. RELOCATED CNS SPEAKERS SHALL USE EXISTING HARDWARE AND MOUNTS AND REQUIRE NEW JUNCTION BOX AND CONDUIT ONLY AS NOTED ON THE PLANS. RELOCATED CNS SPEAKERS AND ASSOCIATED BUTTONS WILL BE REINSTALLED BY DISTRICT IT. NEW CNS SPEAKERS AND MOUNTS MAY BE REQUIRED IF NOT ENOUGH CNS SPEAKERS CAN BE RELOCATED. INSTALL NEW MOUNTS AS REQUIRED AND INSTALL ALL RELOCATED MOUNTS FOR USE BY DISTRICT IT AND CNS SPEAKER SYSTEM.

KEYNOTE LEGEND

#	Keynote
1	DATA FOR INSTRUCTOR WALL PHONE, WALL PHONE IS OFOI
2	REMOVE AND REPLACE EXISTING SECURITY CAMERA IN WAITING AREA WITH NEW SECURITY CAMERA AT THIS LOCATION
3	NEW WALL-MOUNT VIDEO PROJECTOR, OWNER-FURNISHED AND CONTRACTOR-INSTALLED
4	INTEGRATED ELECTRONIC LOCKING HARDWARE. REFER TO DIVISION 08 AND DOOR HARDWARE SCHEDULE FOR PRODUCT INFORMATION, TYPICAL OF ALL INTEGRATED LOCK LOCATIONS
5	CEILING-MOUNTED ARECONT VISION MODEL # AV 12275DN-08-PSA SECURITY CAMERA

NOLL & TAM ARCHITECTS
729 Heinz Avenue
Berkeley, CA 94710
tel 510.542.2200
fax 510.542.2201

ENGINEERING SEAL

LICENSED ARCHITECT
RYAN GNUSTI RASKOP
C-35434
RENEW 10/31/2019
STATE OF CALIFORNIA

APPROVALS
FILE NUMBER: 07-C1
DIVISION OF THE STATE ARCHITECT
APP# 01-117630
ACS_____ FLS_____ SSS_____
Date:

Charles M. Salter ASSOCIATES INC

PROJECT TITLE
CONTRA COSTA CCD
D-4002
DVC SAN RAMON CAMPUS EXPANSION & RENOVATION
1690 Watermill Rd.
San Ramon, CA 94582

ISSUE TITLE
INCREMENT 1 - RENOVATION

ISSUE DATE 10/25/18
NOLL & TAM JOB NUMBER 21630

REVISIONS

#	DATE	DESCRIPTION
4	04/25/2019	ASI-009

SHEET TITLE
LEVEL 1 PLAN - WEST BUILDING

SHEET NUMBER
T1.01.1

9/29/2021 1:25:58 PM 16-0633_DVC San Ramon Expansion_19_INC1_detached.rvt

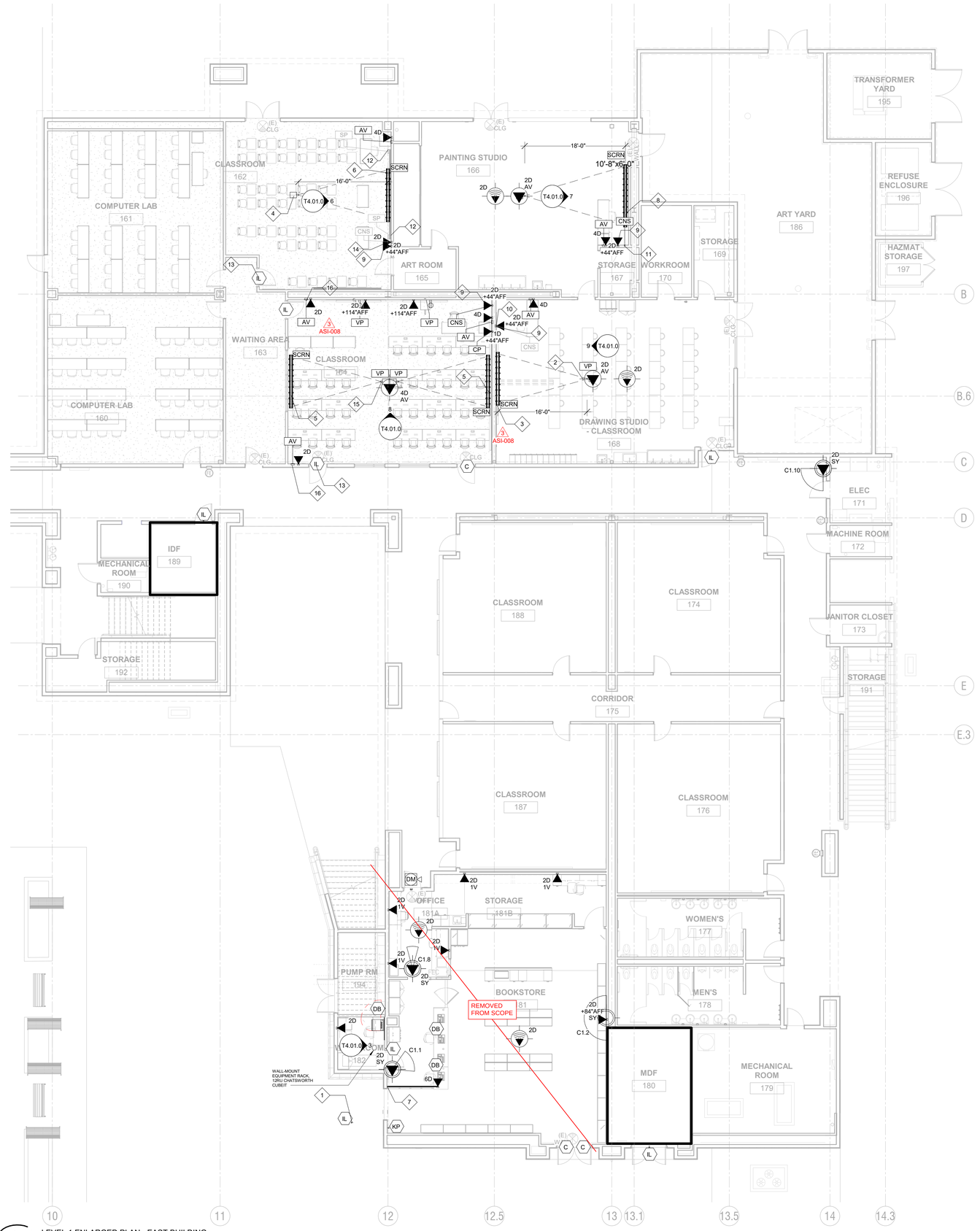

1 LEVEL 1 ENLARGED PLAN - EAST BUILDING
1/8" = 1'-0"

SHEET NOTES

A.	USE EXISTING CABLING CONVEYANCE SYSTEMS FOR ALL NEW TELECOMMUNICATIONS STRUCTURED CABLING
B.	ALL ACTIVE AV EQUIPMENT INCLUDING LOUDSPEAKERS, DISPLAYS, AND PROJECTORS ARE NOT IN CONTRACT, OFOI
C.	PROTECT ALL EXISTING CABLING IN-PLACE. ALL DEVICE LOCATIONS ON PLANS ARE NEW AND WILL USE NEW CABLING
D.	STUB CONDUITS TO EXISTING TELECOM CONVEYANCE SYSTEMS FROM ALL NEW TELECOMMUNICATIONS OUTLET DEVICE JUNCTION BOXES
E.	TEST ALL EXISTING CABLING IN ROOMS WHERE EXISTING CABLING HAS BEEN PROTECTED IN-PLACE. PROVIDE TEST RESULTS AS OUTLINED IN THE SPECIFICATIONS
F.	EXISTING EQUIPMENT AND HARDWARE WILL BE REMOVED BY CAMPUS. REMAINING EQUIPMENT, LOUDSPEAKERS, OR OTHER HARDWARE NOT REMOVED BY THE CAMPUS SHALL BE PROTECTED IN-PLACE
G.	REFER TO DOOR HARDWARE SCHEDULE FOR ELECTRONIC LOCK HARDWARE. ALL EXISTING RETROFIT DOORS WITH ELECTRONIC LOCKS SHALL BE BATTERY OPERATED. NEW DOORS WILL BE HARD-WIRED. PROVIDE WIRING TYPE AND QUANTITIES AS REQUIRED BY THE DOOR HARDWARE SCHEDULE AND HARDWARE GROUP INFORMATION
H.	INTEGRATE ALL NEW SECURITY PRODUCTS WITH EXISTING SECURITY INFRASTRUCTURE IN EXISTING TELECOM ROOMS. ROUTE SECURITY CABLING TO NEAREST TELECOM ROOM. COORDINATE WITH DISTRICT IT FOR MORE INFORMATION
I.	"CNS" SPEAKERS ARE SHOWN FOR COORDINATION ONLY. IF CNS SPEAKERS ARE EXISTING IN ROOM, REMOVE AND REINSTALL THE CNS SPEAKER. IF CNS SPEAKERS ARE NOT INSTALLED IN THE ROOM, INSTALL NEW JUNCTION BOX. RELOCATED CNS SPEAKERS SHALL USE EXISTING HARDWARE AND MOUNTS AND REQUIRE NEW JUNCTION BOX AND CONDUIT ONLY AS NOTED ON THE PLANS. RELOCATED CNS SPEAKERS AND ASSOCIATED BUTTONS WILL BE REINSTALLED BY DISTRICT IT. NEW CNS SPEAKERS AND MOUNTS MAY BE REQUIRED IF NOT ENOUGH CNS SPEAKERS CAN BE RELOCATED. INSTALL NEW MOUNTS AS REQUIRED AND INSTALL ALL RELOCATED MOUNTS FOR USE BY DISTRICT IT AND CNS SPEAKER SYSTEM.

KEYNOTE LEGEND

#	Keynote
1	INTEGRATE WITH ADA ACTUATOR ON BOLLARD, REFER TO ARCHITECTURAL FOR MORE INFORMATION
2	CLASSROOM PROJECTOR LOCATION, PROVIDE PROJECTOR MOUNT, JUNCTION BOX AND CONDUIT TO INSTRUCTOR DESK LOCATION, VIDEO PROJECTOR IS OFOI
3	RELOCATED EXISTING VIDEO PROJECTION SCREEN
4	EXISTING VIDEO PROJECTOR, USE EXISTING INFRASTRUCTURE AND ROTATE VIDEO PROJECTOR / MOUNT TO RELOCATED VIDEO PROJECTION SCREEN LOCATION
5	MOTORIZED PROJECTION SCREEN, DRAPER ACCESS V, CEILING-RECESSED, TAB-TENSIONED, 87.5"x140". VERIFY SIZE AND TYPE w/ DISTRICT IT PRIOR TO PURCHASE
6	RELOCATED EXISTING VIDEO PROJECTION SCREEN MOUNTED TO CLASSROOM WALL
7	1-1/2" CONDUIT FROM TELECOMMUNICATIONS DATA NETWORK JUNCTION BOX, THROUGH ARCHITECTURAL WALL PARTITION, UP WALL TO ACCESSIBLE CEILING
8	NEW MANUAL PULL-DOWN PROJECTION SCREEN, OWNER-FURNISHED AND GENERAL CONTRACTOR-INSTALLED
9	DATA FOR INSTRUCTOR WALL PHONE, WALL PHONE IS OFOI
10	EXISTING RELOCATED CNS SPEAKER, MOUNT PUSH-BUTTON AT STANDARD SWITCH HEIGHT AND CNS NOTIFICATION SPEAKER AT 8'-0"AFF
11	NEW CNS EMERGENCY NOTIFICATION SPEAKER (OWNER-FURNISHED, CONTRACTOR-INSTALLED), MOUNT PUSH-BUTTON AT STANDARD SWITCH HEIGHT AND CNS NOTIFICATION SPEAKER AT 8'-0"AFF
12	EXISTING RELOCATED WALL-MOUNTED LOUDSPEAKER. PROVIDE WALL JUNCTION BOX AND 1" CONDUIT STUB TO ACCESSIBLE CEILING
13	INTEGRATED ELECTRONIC LOCKING HARDWARE. REFER TO DIVISION 08 AND DOOR HARDWARE SCHEDULE FOR PRODUCT INFORMATION, TYPICAL OF ALL INTEGRATED LOCK LOCATIONS
14	EXISTING CNS SPEAKER SYSTEM TO REMAIN. REMOVE AND REINSTALL IN-PLACE. VERIFY LOCATION IN-FIELD
15	PROVIDE 1-1/4" CONDUIT FROM VIDEO PROJECTOR LOCATION TO INSTRUCTOR DESK DEDICATED FOR AV CABLING, TYPICAL OF ALL VIDEO PROJECTOR LOCATIONS
16	PROVIDE 1-1/4" CONDUIT FROM AV INPUT LOCATION TO INSTRUCTOR DESK DEDICATED FOR AV CABLING, TYPICAL OF ALL AV INPUT LOCATIONS

3 ASI-008

NOLL & TAM ARCHITECTS
729 Heinz Avenue
Berkeley, CA 94710
tel 510.542.2200
fax 510.542.2201

ENGINEERING SEAL

LICENSED ARCHITECT
RYAN GNUSTI RASKOP
C-35434
RENEW 10/31/2019
STATE OF CALIFORNIA

APPROVALS
FILE NUMBER: 07-C1
DIVISION OF THE STATE ARCHITECT
APP# 01-117630
ACS_____ FLS_____ SSS_____
Date:

Charles M. Salter ASSOCIATES INC

PROJECT TITLE
CONTRA COSTA CCD
D-4002
DVC SAN RAMON CAMPUS EXPANSION & RENOVATION
1690 Watermill Rd.
San Ramon, CA 94582

ISSUE TITLE
INCREMENT 1 - RENOVATION

ISSUE DATE 10/25/18
NOLL & TAM JOB NUMBER 21630

REVISIONS

	DATE	DESCRIPTION
3	04/25/2019	ASI-008

SHEET TITLE
LEVEL 1 PLAN - EAST BUILDING

SHEET NUMBER
T1.02.1

9/29/2021 1:26:04 PM 16-0833_DVC San Ramon Expansion_19_INC1_detached.rvt

1 A 02 - WESTCopy 1
1/8" = 1'-0"

9/29/2021 1:26:05 PM 16-0833_DVC San Ramon Expansion_19_INCT_detached.rvt

KEYNOTE LEGEND	
#	Keynote
1	INTEGRATED ELECTRONIC LOCKING HARDWARE. REFER TO DIVISION 08 AND DOOR HARDWARE SCHEDULE FOR PRODUCT INFORMATION, TYPICAL OF ALL INTEGRATED LOCK LOCATIONS
2	NEW CNS LOUDSPEAKER AND PUSH BUTTON RELOCATED FROM ROOM WHERE NEW BOOKSTORE IS PLANNED. COORDINATE FINAL LOCATION WITH CAMPUS IT AND ARCHITECT
3	EXISTING AV EQUIPMENT RACK, PROTECT IN-PLACE

NOLL & TAM ARCHITECTS
729 Heinz Avenue
Berkeley, CA 94710
tel 510.542.2200
fax 510.542.2201

ENGINEERING SEAL

LICENSED ARCHITECT
RYAN GNUSTI RASKOP
C-35434
RENEW: 10/31/2019
STATE OF CALIFORNIA

APPROVALS
FILE NUMBER: 07-C1
DIVISION OF THE STATE ARCHITECT
APP# 01-117630
ACS_____FLS_____SSS_____
Date:

Charles M. Salter ASSOCIATES INC

PROJECT TITLE
CONTRA COSTA CCD
D-4002
DVC SAN RAMON CAMPUS EXPANSION & RENOVATION
1690 Watermill Rd.
San Ramon, CA 94582

ISSUE TITLE
INCREMENT 1 - RENOVATION

ISSUE DATE 10/25/18
NOLL & TAM JOB NUMBER 21630

REVISIONS
	DATE	DESCRIPTION

SHEET TITLE
LEVEL 2 PLAN - WEST BUILDING

SHEET NUMBER
T1.03.1

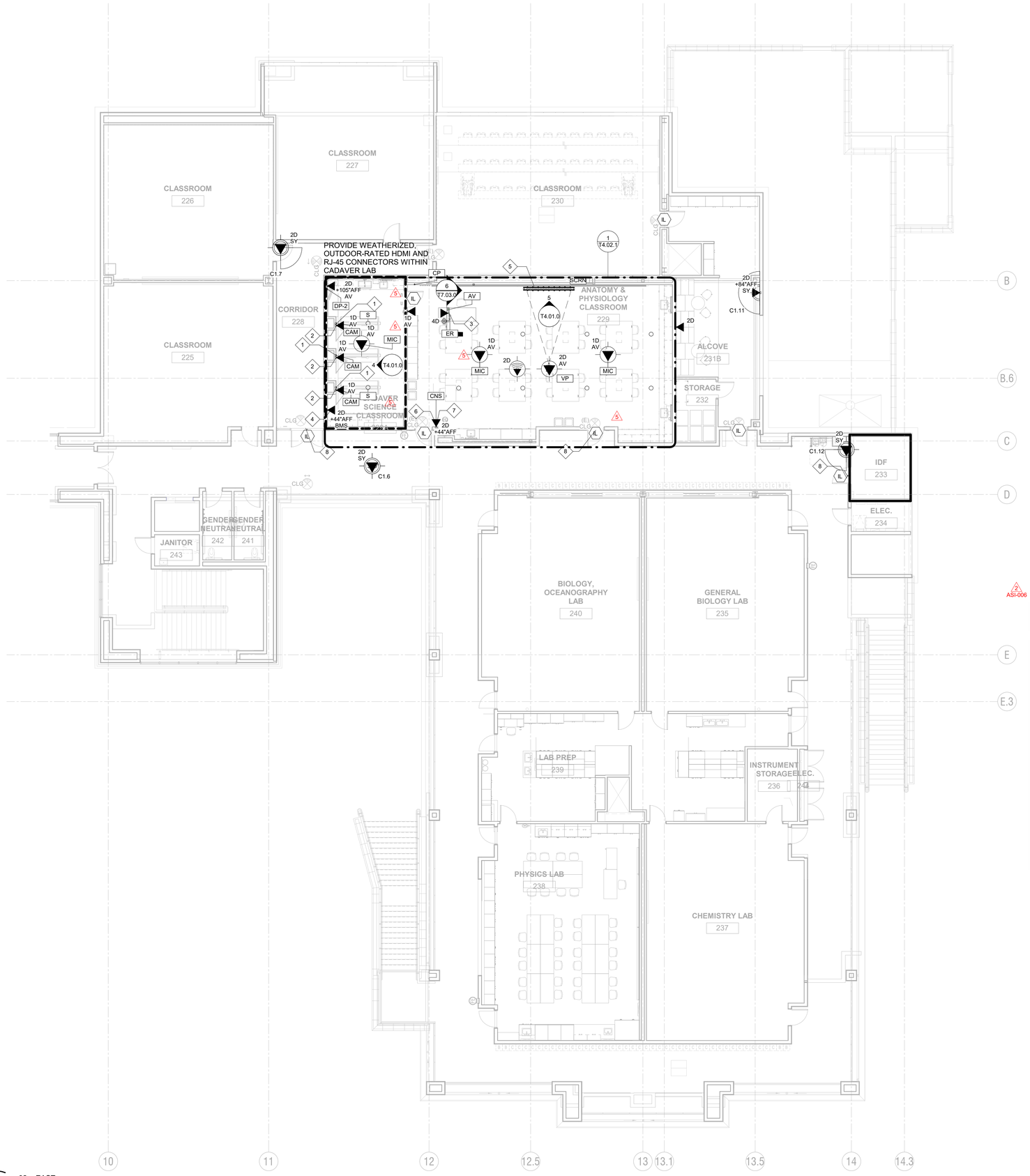

1 02 - EAST
1/8" = 1'-0"

ASI-006

SHEET NOTES

A.	USE EXISTING CABLING CONVEYANCE SYSTEMS FOR ALL NEW TELECOMMUNICATIONS STRUCTURED CABLING
B.	ALL ACTIVE AV EQUIPMENT INCLUDING LOUDSPEAKERS, DISPLAYS, AND PROJECTORS ARE NOT IN CONTRACT, OFOI
C.	PROTECT ALL EXISTING CABLING IN-PLACE. ALL DEVICE LOCATIONS ON PLANS ARE NEW AND WILL USE NEW CABLING
D.	STUB CONDUITS TO EXISTING TELECOM CONVEYANCE SYSTEMS FROM ALL NEW TELECOMMUNICATIONS OUTLET DEVICE JUNCTION BOXES
E.	TEST ALL EXISTING CABLING IN ROOMS WHERE EXISTING CABLING HAS BEEN PROTECTED IN-PLACE. PROVIDE TEST RESULTS AS OUTLINED IN THE SPECIFICATIONS
F.	EXISTING EQUIPMENT AND HARDWARE WILL BE REMOVED BY CAMPUS. REMAINING EQUIPMENT, LOUDSPEAKERS, OR OTHER HARDWARE NOT REMOVED BY THE CAMPUS SHALL BE PROTECTED IN-PLACE
G.	REFER TO DOOR HARDWARE SCHEDULE FOR ELECTRONIC LOCK HARDWARE. ALL EXISTING RETROFIT DOORS WITH ELECTRONIC LOCKS SHALL BE BATTERY OPERATED. NEW DOORS WILL BE HARD-WIRED. PROVIDE WIRING TYPE AND QUANTITIES AS REQUIRED BY THE DOOR HARDWARE SCHEDULE AND HARDWARE GROUP INFORMATION
H.	INTEGRATE ALL NEW SECURITY PRODUCTS WITH EXISTING SECURITY INFRASTRUCTURE IN EXISTING TELECOM ROOMS. ROUTE SECURITY CABLING TO NEAREST TELECOM ROOM. COORDINATE WITH DISTRICT IT FOR MORE INFORMATION
I.	"CNS" SPEAKERS ARE SHOWN FOR COORDINATION ONLY. IF CNS SPEAKERS ARE EXISTING IN ROOM, REMOVE AND REINSTALL THE CNS SPEAKER. IF CNS SPEAKERS ARE NOT INSTALLED IN THE ROOM, INSTALL NEW JUNCTION BOX. RELOCATED CNS SPEAKERS SHALL USE EXISTING HARDWARE AND MOUNTS AND REQUIRE NEW JUNCTION BOX AND CONDUIT ONLY AS NOTED ON THE PLANS. RELOCATED CNS SPEAKERS AND ASSOCIATED BUTTONS WILL BE REINSTALLED BY DISTRICT IT. NEW CNS SPEAKERS AND MOUNTS MAY BE REQUIRED IF NOT ENOUGH CNS SPEAKERS CAN BE RELOCATED. INSTALL NEW MOUNTS AS REQUIRED AND INSTALL ALL RELOCATED MOUNTS FOR USE BY DISTRICT IT AND CNS SPEAKER SYSTEM.
J.	CADAVER LAB AV SYSTEM NOTES: The contractor is to provide all labor and materials necessary to install and complete the Cadaver lab CCTV AV system to full function, including but not limited to: 1. Mount the TV Wall mount bracket to the wall (backing already specified in architectural drawings) 2. Mount the TV to the wall mount bracket 3. Mount the swing arms to the wall 4. Mount the cameras to the custom swing arm mount plates shown on 7/17.03.0 5. Install power over ethernet adaptors and run cabling to cameras 6. Provide and run all required signal and power cabling 1. Please specify, via drawing notes or specification revision, the quality requirements of the HDMI cables 7. Program the washable wireless remote to the installed monitor 8. Test the installed system 9. Demonstrate the installed system to the Users.

KEYNOTE LEGEND

#	Keynote
1	MOUNT CAMERA JUNCTION BOX ABOVE CEILING, PROVIDE (1) 1-1/4" CONDUIT FROM CAMERA JUNCTION BOX TO DISPLAY BACKBOX
2	PoE DATA NETWORK RECEPTACLE FOR SWING-ARM CADAVER LAB CAMERA. REFER TO ARCHITECTURAL DRAWINGS FOR MOUNTING HEIGHT OF SWING-ARM. ROUTE AV CONDUITS TO VIDEO DISPLAY JUNCTION BOX
3	PROVIDE (1) 1" CONDUIT DEDICATED FOR DATA AND (2) 2" CONDUITS DEDICATED FOR AV THROUGH SLAB FROM EQUIPMENT RACK BACKBOX. ROUTE AV CONDUIT UP INSTRUCTION WALL TO ACCESSIBLE CEILING
4	DATA NETWORK RECEPTACLE FOR TEMPERATURE CONTROL, BUILDING MANAGEMENT SYSTEM
5	NEW MANUAL PULL-DOWN PROJECTION SCREEN, OWNER-FURNISHED AND GENERAL CONTRACTOR-INSTALLED
6	DATA FOR INSTRUCTOR WALL PHONE, WALL PHONE IS OFOI
7	RELOCATE CNS SPEAKER FROM ROOM 229 OR 232. PROVIDE NEW JUNCTION BOX AND CONDUIT FOR SPEAKER AND PUSH-BUTTON
8	INTEGRATED ELECTRONIC LOCKING HARDWARE. REFER TO DIVISION 08 AND DOOR HARDWARE SCHEDULE FOR PRODUCT INFORMATION, TYPICAL OF ALL INTEGRATED LOCK LOCATIONS

NOLL & TAM ARCHITECTS
729 Heinz Avenue
Berkeley, CA 94710
tel 510.542.2200
fax 510.542.2201

ENGINEERING SEAL

LICENSED ARCHITECT
RYAN GNUSTI RASKOP
C-35434
RENEW: 10/31/2019
STATE OF CALIFORNIA

APPROVALS
FILE NUMBER: 07-C1
DIVISION OF THE STATE ARCHITECT
APP# 01-117630
ACS_____ FLS_____ SSS_____
Date:

Charles M. Salter ASSOCIATES INC

PROJECT TITLE
CONTRA COSTA CCD
D-4002
DVC SAN RAMON CAMPUS EXPANSION & RENOVATION
2 1690 Watermill Rd.
San Ramon, CA 94582

ISSUE TITLE
INCREMENT 1 - RENOVATION

ISSUE DATE 10/25/18
NOLL & TAM JOB NUMBER 21630

REVISIONS

	DATE	DESCRIPTION
2	04/25/2019	CADAVER LAB AV REV
5	11/05/2019	AV SYSTEMS DRAWINGS

SHEET TITLE
LEVEL 2 PLAN - EAST BUILDING

SHEET NUMBER
T1.04.1

9/29/2021 1:26:10 PM 16-0633_DVC San Ramon Expansion_19_INC1_detached.rvt

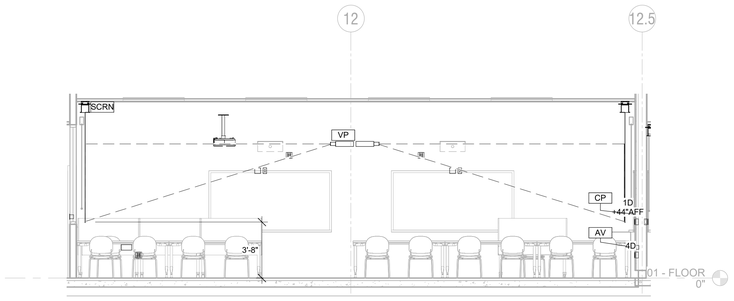

8 CLASSROOM 164 ELEVATION
1/4" = 1'-0"

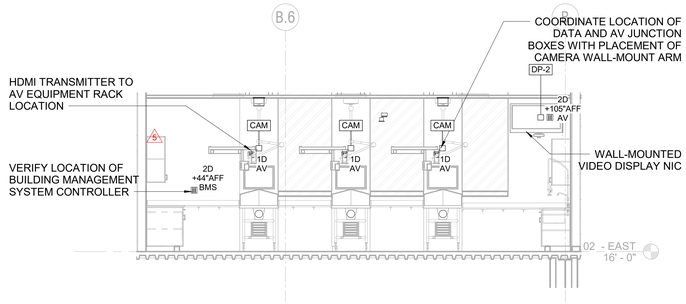

4 CADAVER LAB ELEVATION
1/4" = 1'-0"

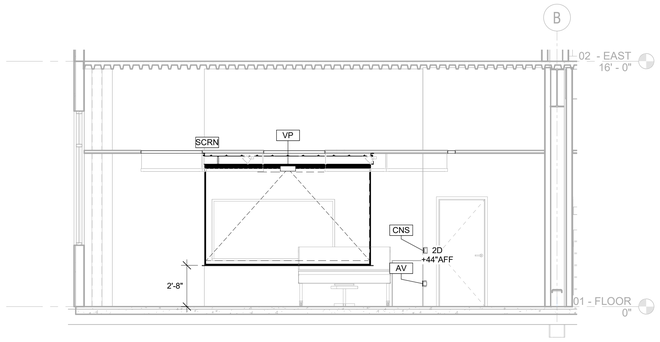

7 CLASSROOM 166 ELEVATION
1/4" = 1'-0"

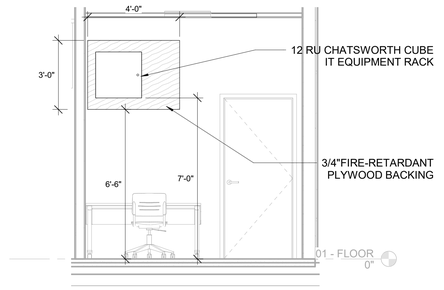

3 BOOKSTORE SERVER ROOM ELEVATION
3/8" = 1'-0"

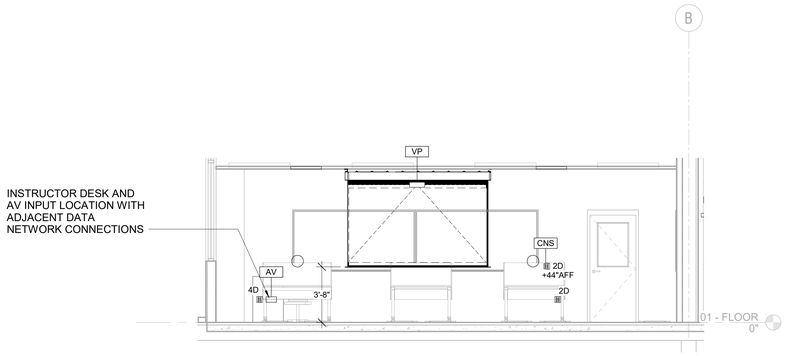

6 CLASSROOM 162 ELEVATION
1/4" = 1'-0"

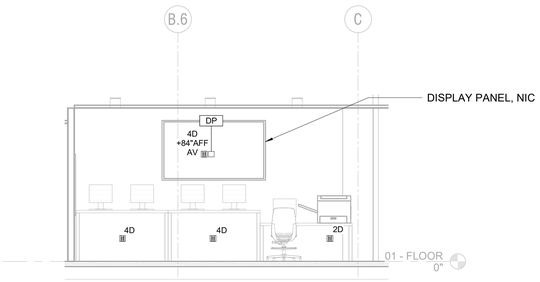

2 WAITING ROOM ELEVATION
1/4" = 1'-0"

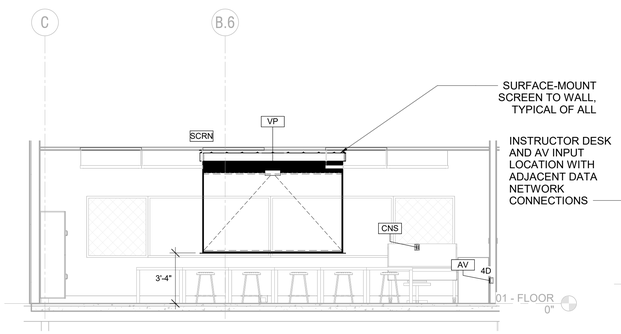

9 CLASSROOM 168 ELEVATION
1/4" = 1'-0"

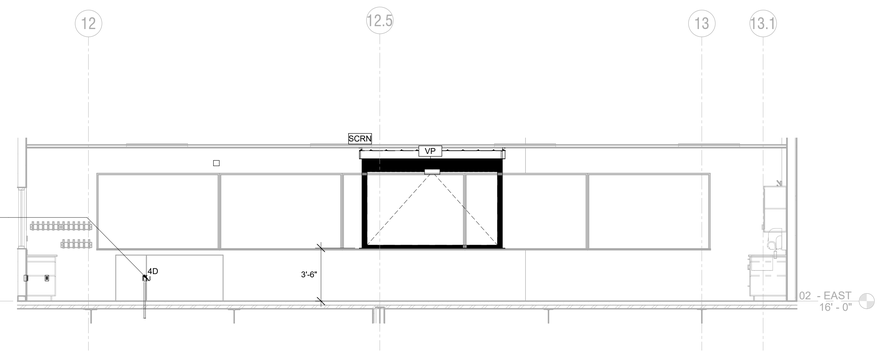

5 ANATOMY & PHYSIOLOGY LAB
1/4" = 1'-0"

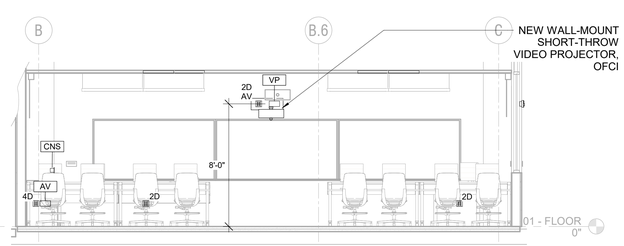

1 ASSESSMENT LAB ELEVATION
1/4" = 1'-0"

NOLL & TAM ARCHITECTS
729 Heinz Avenue
Berkeley, CA 94710
tel 510.542.2200
fax 510.542.2201

ENGINEERING SEAL

LICENSED ARCHITECT
RYAN GNUSTI RASKOP
C-35434
RENEW: 10/31/2019
STATE OF CALIFORNIA

APPROVALS
FILE NUMBER: 07-C1
DIVISION OF THE STATE ARCHITECT
APP# 01-117630
ACS_____FLS_____SSS_____
Date:

Charles M. Salter ASSOCIATES INC

PROJECT TITLE
CONTRA COSTA CCD
D-4002
DVC SAN RAMON CAMPUS EXPANSION & RENOVATION
1690 Watermill Rd.
San Ramon, CA 94582

ISSUE TITLE
INCREMENT 1 - RENOVATION

ISSUE DATE 10/25/18
NOLL & TAM JOB NUMBER 21630

REVISIONS

#	DATE	DESCRIPTION
5	11/05/2019	AV SYSTEMS DRAWINGS

SHEET TITLE
ELEVATIONS

SHEET NUMBER
T4.01.0

9/29/2021 1:26:15 PM 16-0633_DVC San Ramon Expansion_19_INC1_detached.rvt

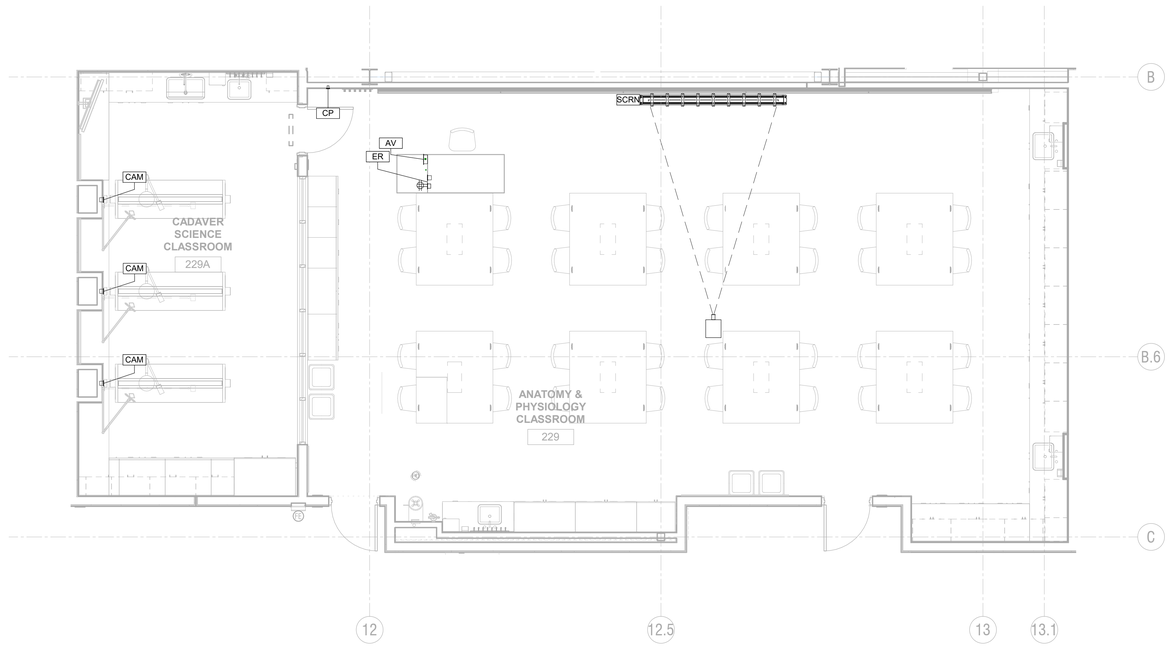

1 CADAVER LAB AND ANATOMY CLASSROOM PLAN
1/4" = 1'-0"

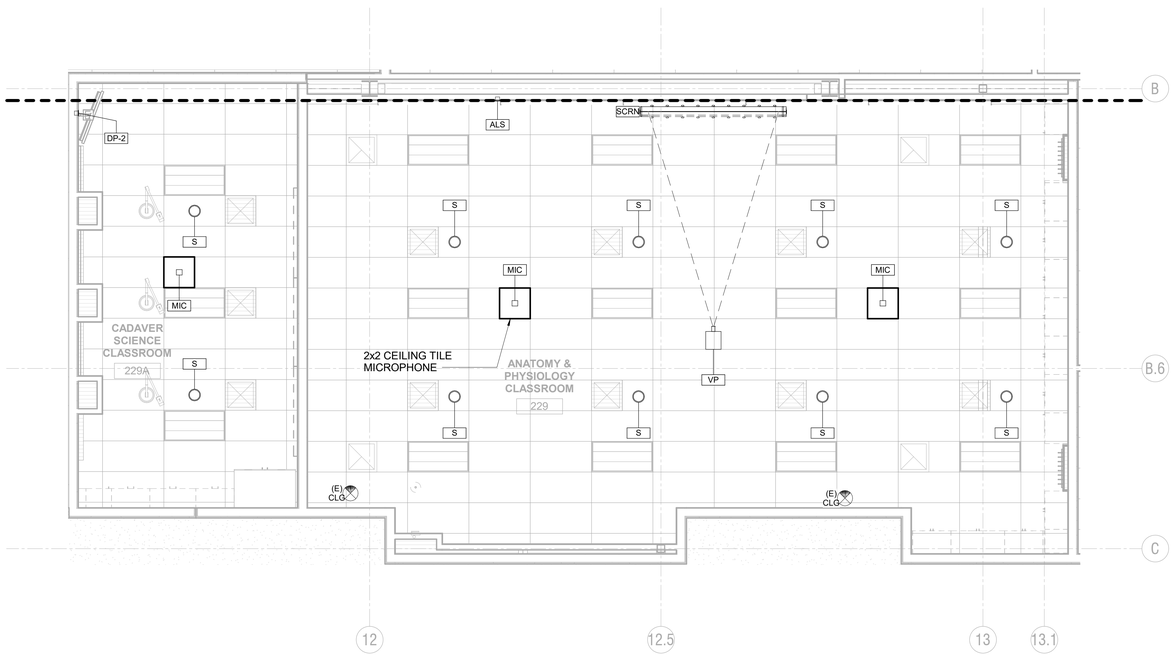

2 CADAVER LAB AND ANATOMY CLASSROOM RCP
1/4" = 1'-0"

NOLL & TAM ARCHITECTS
729 Heinz Avenue
Berkeley, CA 94710
tel 510.542.2200
fax 510.542.2201

ENGINEERING SEAL

LICENSED ARCHITECT
RYAN GNUSTI RASKOP
C-35434
RENEW: 10/31/2019
STATE OF CALIFORNIA

APPROVALS
FILE NUMBER: 07-C1
DIVISION OF THE STATE ARCHITECT
APP# 01-117630
ACS_____FLS_____SSS_____
Date:

Charles M. Salter ASSOCIATES INC

PROJECT TITLE

CONTRA COSTA CCD
D-4002
DVC SAN RAMON CAMPUS EXPANSION & RENOVATION

1690 Watermill Rd.
San Ramon, CA 94582

ISSUE TITLE
INCREMENT 1 - RENOVATION

ISSUE DATE **10/25/18**
NOLL & TAM JOB NUMBER **21630**

REVISIONS

#	DATE	DESCRIPTION
5	11/05/2019	AV SYSTEMS DRAWINGS

SHEET TITLE
ENLARGED CADAVER LAB AND CLASSROOM PLANS

SHEET NUMBER
T4.02.1
5

9/29/2021 1:26:17 PM 16-0633_DVC San Ramon Expansion_19_INC1_detached.rvt

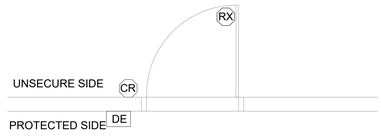

PLAN VIEW

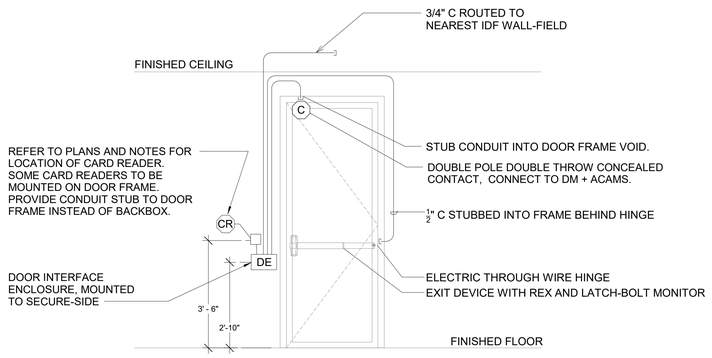

ELEVATION

SEQUENCE OF OPERATION:

- DOOR IS CLOSED AND LOCKED FROM EXTERIOR WITH ALARM MONITORING
- PRESENTING VALID CARDS FOR ENTRY OR PASSIVE EXITING UNLOCKS DOOR AND BYPASSES ALARM.
- PROPPING DOOR SENDS EVENT MESSAGE TO MONITORING STATION AND ACTIVATES LOCAL SOUNDER IN D.M.
- OPENING OR FORCING DOOR FROM EXTERIOR SENDS ALARM TO MONITORING STATION

7 SINGLE DOOR WITH CARD READER, EXIT DEVICE
NTS

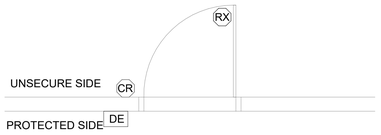

PLAN VIEW

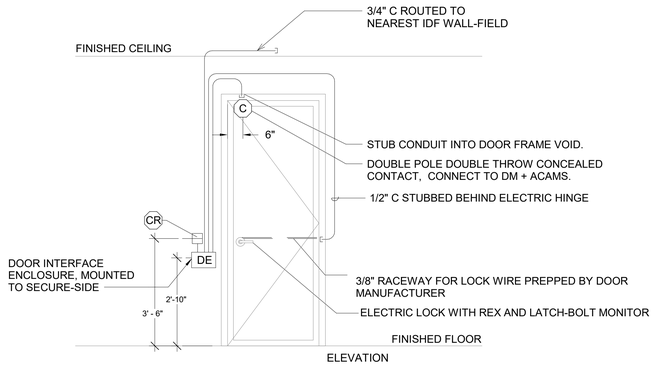

ELEVATION

SEQUENCE OF OPERATION:

- DOOR IS CLOSED AND LOCKED FROM EXTERIOR WITH ALARM MONITORING
- PRESENTING VALID CARDS FOR ENTRY OR MECHANICAL EXITING UNLOCKS DOOR AND BYPASSES ALARM.
- PROPPING DOOR SENDS EVENT MESSAGE TO MONITORING STATION AND ACTIVATES LOCAL SOUNDER IN DM
- OPENING OR FORCING DOOR FROM EXTERIOR SENDS ALARM TO MONITORING STATION

8 SINGLE DOOR WITH CARD READER
NTS

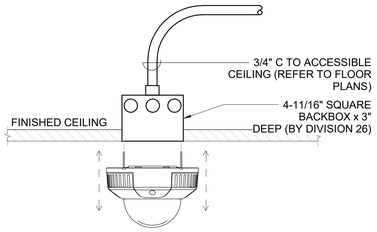

6 DOME CAMERA CEILING MOUNTING
NTS

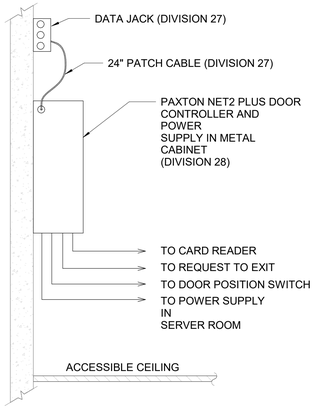

5 DOOR CONTROLLER
NTS

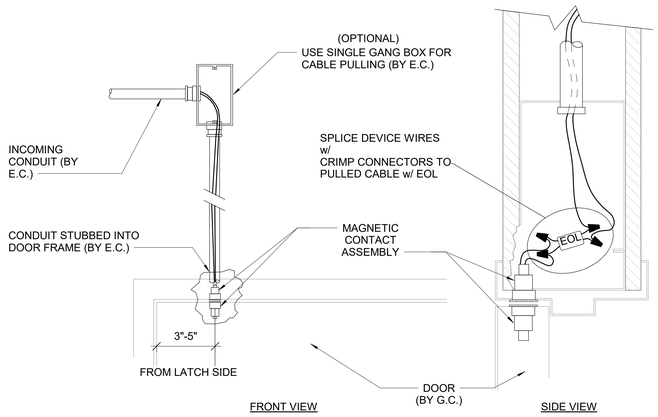

NOTES:
1. LEAVE 48" CABLE SLACK AT EACH DEVICE
2. BACKBOX NOT REQUIRED

3 DOOR POSITION SWITCH WIRING (C)
NTS

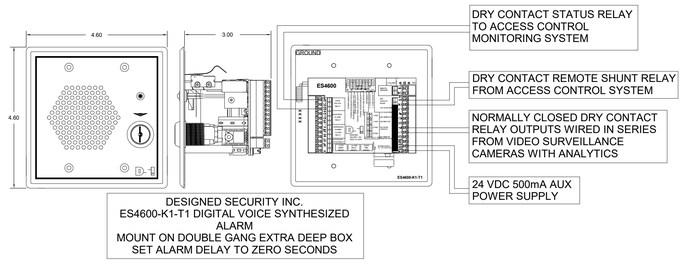

2 DOOR MANAGEMENT ALARM (DM)
NTS

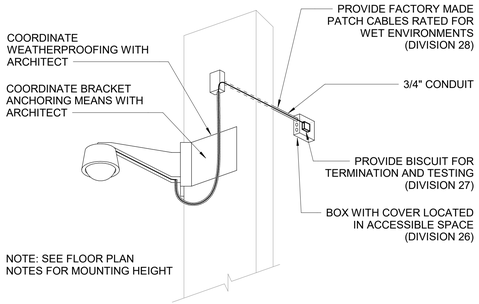

4 CORNER MOUNTED DOME CAMERA
NTS

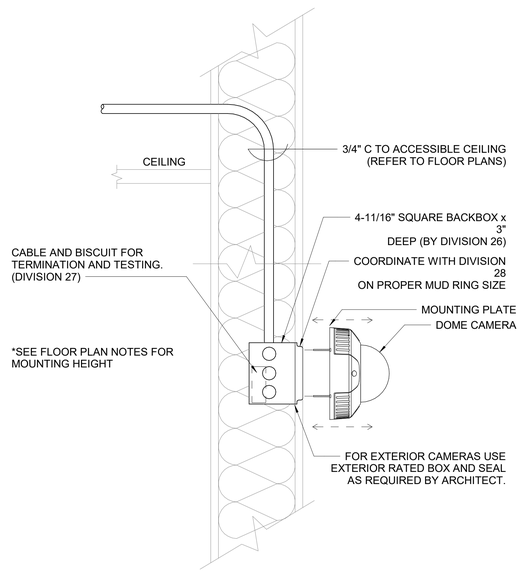

1 DOME CAMERA WALL MOUNTING
NTS

NOLL & TAM ARCHITECTS
729 Heinz Avenue
Berkeley, CA 94710
tel 510.542.2200
fax 510.542.2201

ENGINEERING SEAL

LICENSED ARCHITECT
RYAN GNUSTI RASKOP
C-35434
RENEW: 10/31/2019
STATE OF CALIFORNIA

APPROVALS
FILE NUMBER: 07-C1
DIVISION OF THE STATE ARCHITECT
APP# 01-117630
ACS_____FLS_____SSS_____
Date:

Charles M. Salter ASSOCIATES INC

PROJECT TITLE
CONTRA COSTA CCD
D-4002
DVC SAN RAMON CAMPUS EXPANSION & RENOVATION

1690 Watermill Rd.
San Ramon, CA 94582

ISSUE TITLE
INCREMENT 1 - RENOVATION

ISSUE DATE	10/25/18
NOLL & TAM JOB NUMBER	21630

REVISIONS

	DATE	DESCRIPTION
1	03/07/2019	RFI #009

SHEET TITLE
DETAILS - SECURITY

SHEET NUMBER
T7.01.0

9/29/2021 1:26:18 PM 16-0633_DVC San Ramon Expansion_19_INC1_detached.rvt

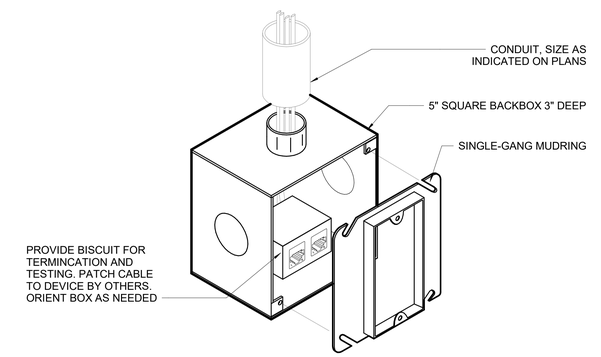

6 BACK BOX w/ SINGLE BISCUIT DETAIL
NTS

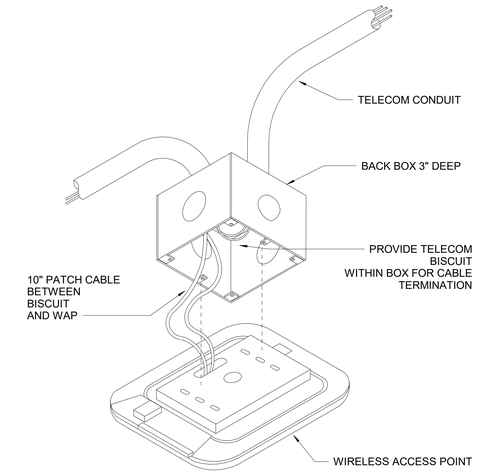

3 WIRELESS ACCESS POINT
NTS

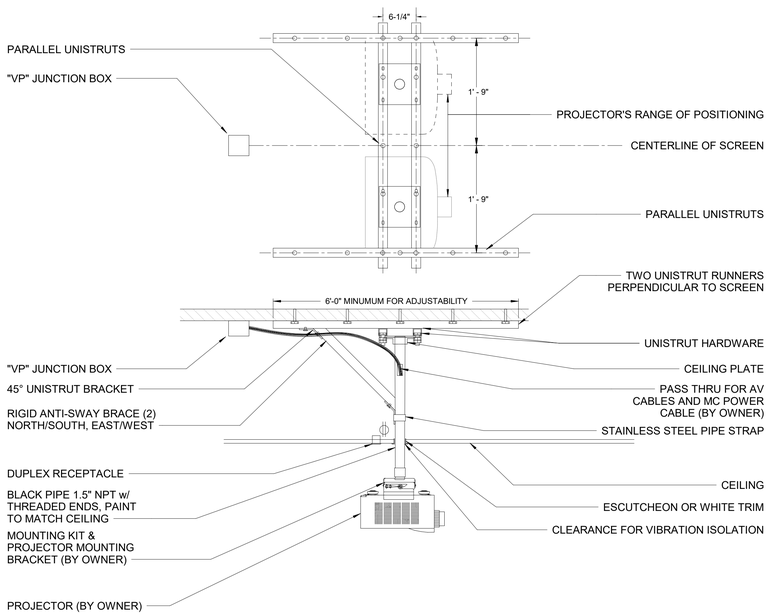

NOTE:
80" MINIMUM CLEARANCE TO BOTTOM OF PROJECTOR IF IN THE PATH OF TRAVEL.
MOUNT PROJECTOR BELOW PENDANT LIGHTING FIXTURES.

7 AV-49 TYPICAL VIDEO PROJECTOR MOUNTING
NTS

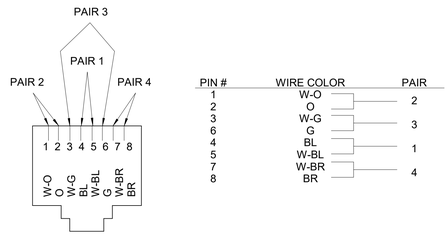

PIN #	WIRE COLOR	PAIR
1	W-O	2
2	O	
3	W-G	3
6	G	
4	BL	1
5	W-BL	
7	W-BR	4
8	BR	

5 TERMINATION SCHEME T568B
NTS

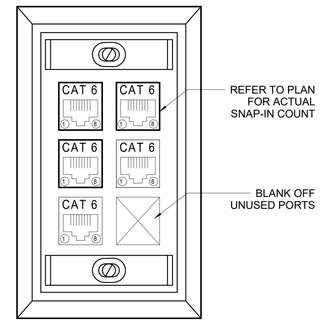

2 WALL PLATE REPTACLES
NTS

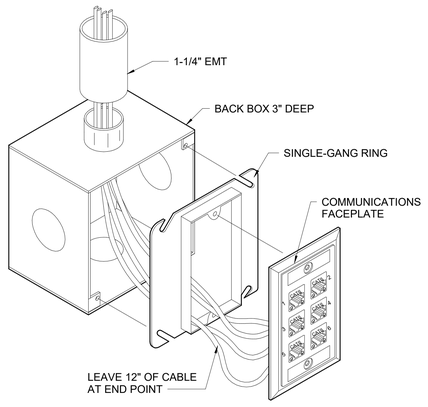

4 BACK BOX
NTS

GENERAL NOTE:
UTILIZE WET ENVIRONMENT PLATES, JACKS, AND PATCH CORDS FOR EXTERIOR LOCATIONS AND CADAVER LAB

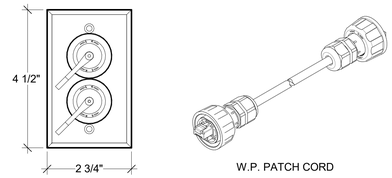

1 WATER PROOF JACK AND PLUG
NTS

NOLL & TAM ARCHITECTS
729 Heinz Avenue
Berkeley, CA 94710
tel 510.542.2200
fax 510.542.2201

ENGINEERING SEAL

LICENSED ARCHITECT
RYAN GNUSTI RASKOP
C-35434
RENEW: 10/31/2019
STATE OF CALIFORNIA

APPROVALS
FILE NUMBER: 07-C1
DIVISION OF THE STATE ARCHITECT
APP# 01-117630
ACS_____FLS_____SSS_____
Date:

Charles M. Salter ASSOCIATES INC

PROJECT TITLE
CONTRA COSTA CCD
D-4002
DVC SAN RAMON CAMPUS EXPANSION & RENOVATION

1690 Watermill Rd.
San Ramon, CA 94582

ISSUE TITLE
INCREMENT 1 - RENOVATION

ISSUE DATE 10/25/18
NOLL & TAM JOB NUMBER 21630

REVISIONS

	DATE	DESCRIPTION
5	11/05/2019	AV SYSTEMS DRAWINGS

SHEET TITLE
DETAILS - TELECOM & AUDIOVISUAL

SHEET NUMBER
T7.02.0

9/28/2021 1:26:19 PM 16-0633_DVC San Ramon Expansion_19_INC1_detached.rvt

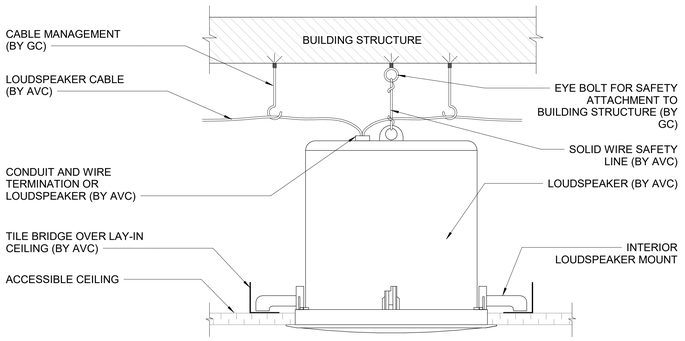

9 TYPICAL ACCESSIBLE CEILING LOUDSPEAKER
NTS

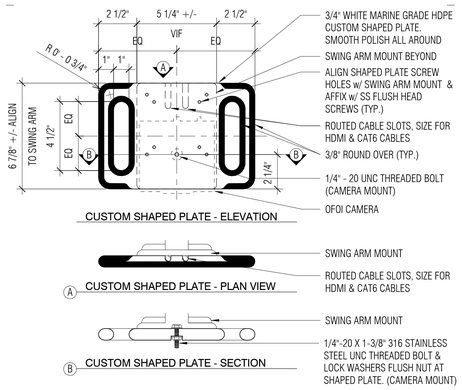

7 CADAVER LAB CAMERA SWING ARM
NTS

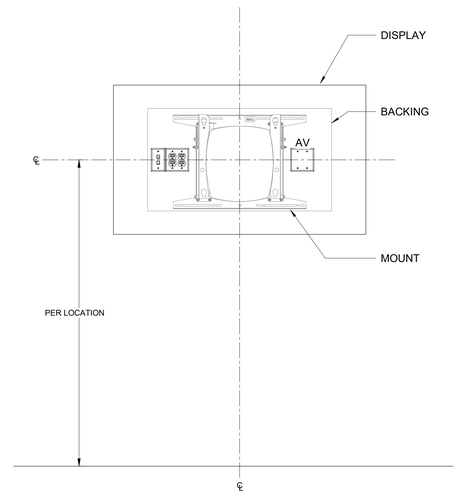

3 TYPICAL FLAT PANEL ELEVATION
NTS

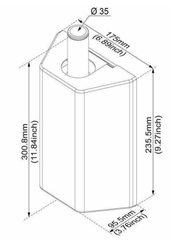

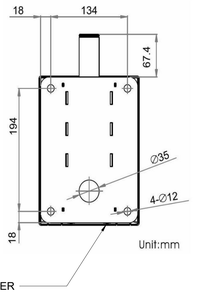

MOUNTING BRACKET AND COVER

8 CADAVER LAB SWING ARM PRODUCT INFO
NTS

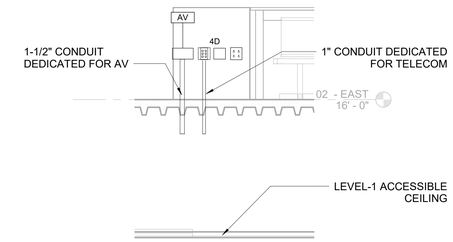

6 ANATOMY LAB INSTRUCTOR DESK CONDUIT PENETRATIONS
1/2" = 1'-0"

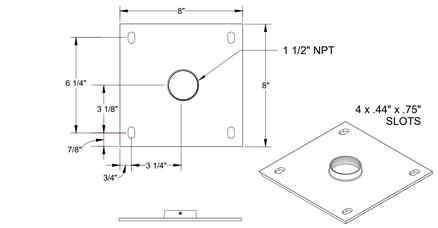

2 TYPICAL MOUNTING PLATE
NTS

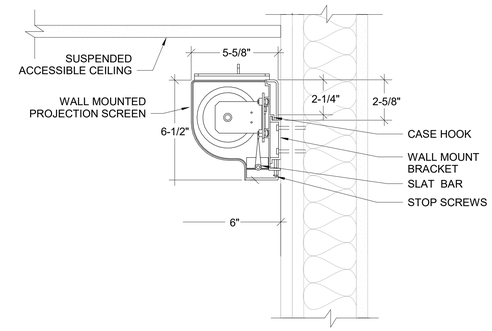

5 ELECTRIC SCREEN WALL MOUNT
NTS

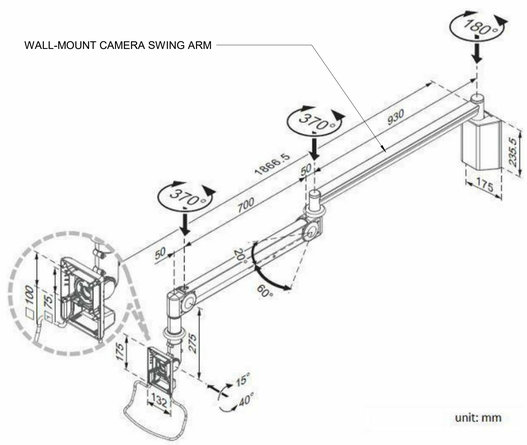

8 CADAVER LAB SWING ARM PRODUCT INFO
NTS

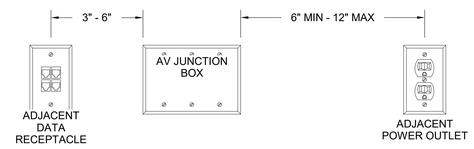

4 AV BOX ADJACENCIES
NTS

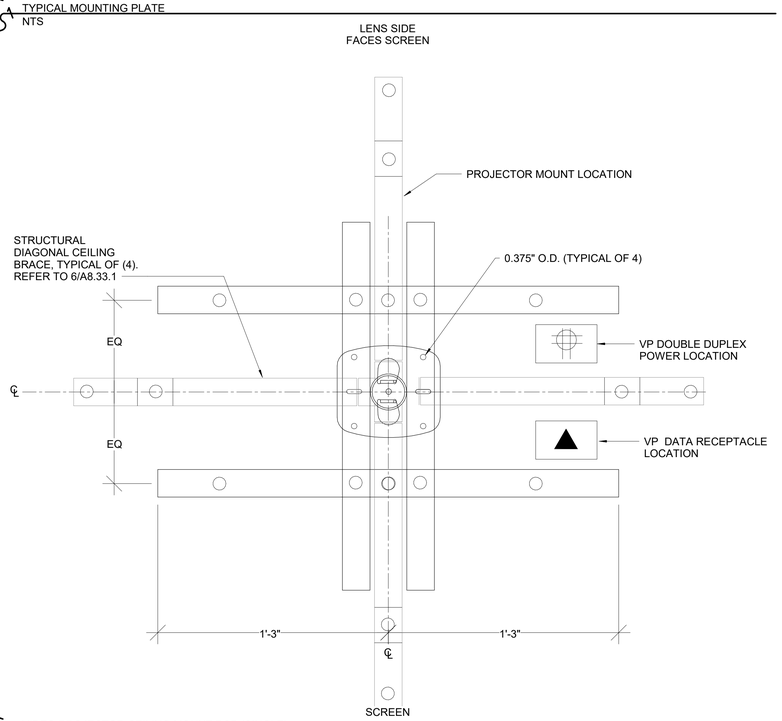

1 VIDEO PROJECTOR CEILING MOUNT RCP (SINGLE)
NTS

NOLL & TAM ARCHITECTS
729 Heinz Avenue
Berkeley, CA 94710
tel 510.542.2200
fax 510.542.2201

ENGINEERING SEAL

LICENSED ARCHITECT
RYAN GNUSTI RASKOP
C-35434
RENEW: 10/31/2019
STATE OF CALIFORNIA

APPROVALS
FILE NUMBER: 07-C1
DIVISION OF THE STATE ARCHITECT
APP# 01-117630
ACS_____FLS_____SSS_____
Date:

Charles M. Salter ASSOCIATES INC

PROJECT TITLE
CONTRA COSTA CCD
D-4002
DVC SAN RAMON CAMPUS EXPANSION & RENOVATION
1690 Watermill Rd.
San Ramon, CA 94582

ISSUE TITLE
INCREMENT 1 - RENOVATION

ISSUE DATE 10/25/18
NOLL & TAM JOB NUMBER 21630

REVISIONS

	DATE	DESCRIPTION
5	11/05/2019	AV SYSTEMS DRAWINGS

SHEET TITLE
DETAILS - AUDIOVISUAL

SHEET NUMBER
T7.03.0

9/29/2021 1:26:20 PM 16-0633_DVC San Ramon Expansion_19_INC1_detached.rvt

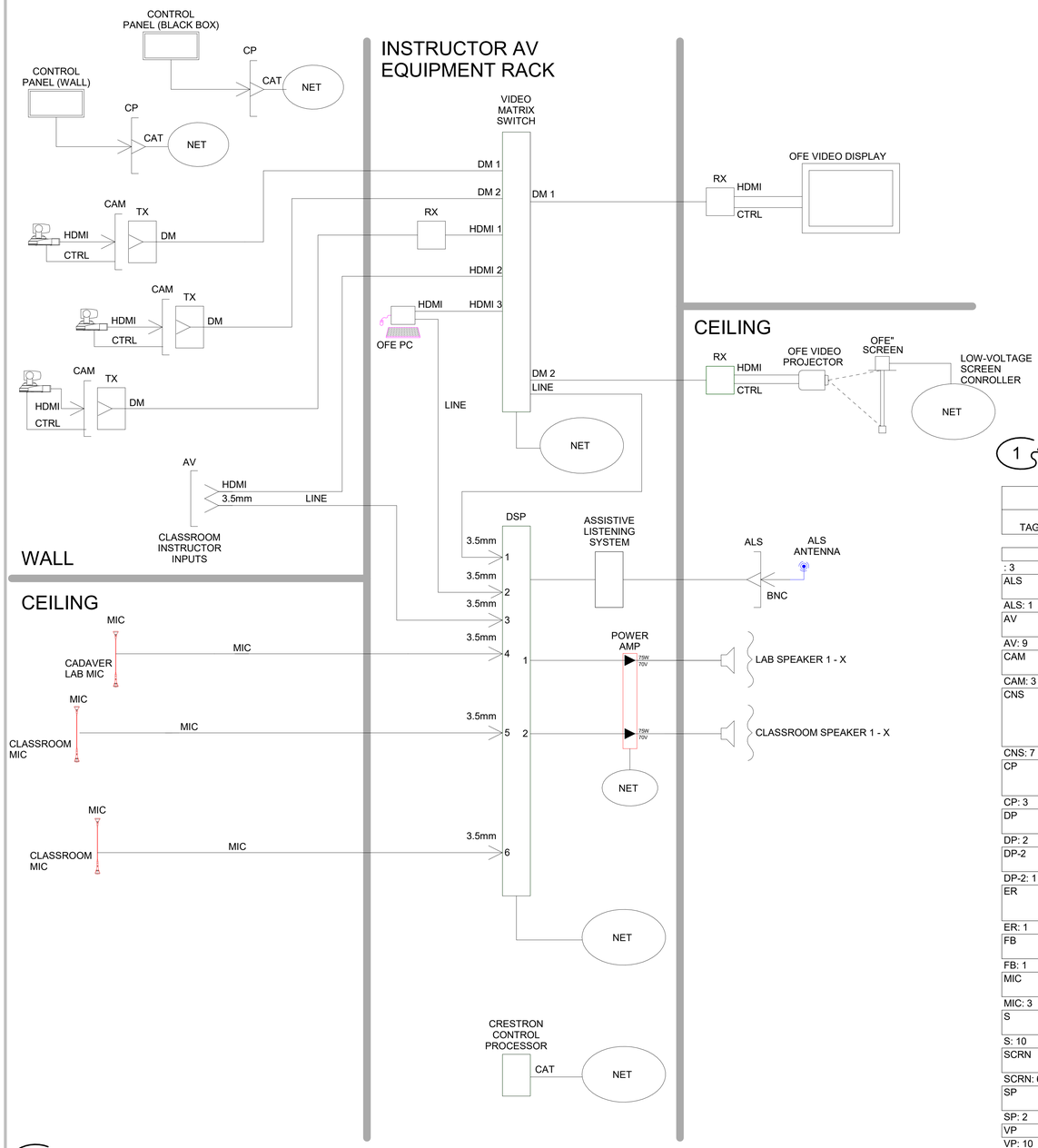

2 CADAVER LAB & CLASSROOM AV FUNCTIONAL DIAGRAM
NTS

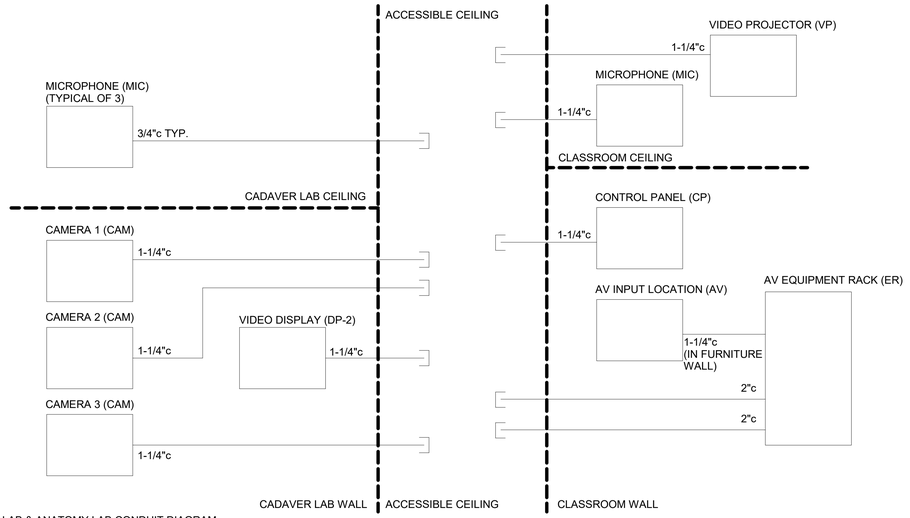

1 CADAVER LAB & ANATOMY LAB CONDUIT DIAGRAM
NTS

AV JUNCTION BOX SCHEDULE

TAG	PURPOSE	TYPE	SIZE	HEIGHT	LOCATION	MOUNTING	RING	COVER	DATA REQUIREMENTS	POWER REQUIREMENTS	COMMENTS
: 3											
ALS	ASSISTIVE LISTENING SYSTEM	NEMA-1	2-GANG	6" ABOVE CEILING	ABOVE CEILING	SURFACE ABOVE CEILING			NONE		
ALS: 1											
AV	AV INPUT LOCATION	NEMA-1	2-GANG	18" AFF	WALL	FLUSH			(4) ADJACENT NETWORK DROP	ADJACENT AC DUPLEX	
AV: 9											
CAM	CADAVER LAB LECTURE CAPTURE CAMERA	NEMA-1	2-GANG	REFER TO ARCH	ABOVE CEILING	FLUSH TO DECK			NONE	ADJACENT AC DUPLEX	
CAM: 3											
CNS	EMERGENCY NOTIFICATION SPEAKER AND ASSOCIATED PUSH-BUTTON	NEMA-1	2-GANG	SPEAKER AT 8'-0", PUSH-BUTTON AT 44"AFF	WALL	FLUSH			NONE		
CNS: 7											
CP	CONTROL PANEL	NEMA-1	2-GANG	48" AFF	WALL	FLUSH	OEM		(1) RJ-45 CONNECTOR INTERNAL TO BOX	NONE	
CP: 3											
DP	DISPLAY PANEL	NEMA-1	4-GANG	84" AFF	WALL	FLUSH			(2) ADJACENT NETWORK DROP	ADJACENT AC DUPLEX	
DP: 2											
DP-2	CADAVER LAB VIDEO DISPLAY PANEL	NEMA-1	2-GANG	105" AFF	WALL	FLUSH			(2) ADJACENT NETWORK DROP	ADJACENT AC DUPLEX	
DP-2: 1											
ER	EQUIPMENT RACK	NEMA-1	4-GANG		WALL	FLUSH			(4) RJ-45 CONNECTORS IN ADJACENT BOX	DOUBLE DUPLEX RECEPTACLE	
ER: 1											
FB	FLOOR BOX AV INPUT LOCATION	N/A	FSR FL-540P-4		FLOOR	FLUSH			(4) INTERNAL NETWORK DROPS	INTERNAL AC DOUBLE DUPLEX	
FB: 1											
MIC	CLASSROOM LECTURE CAPTURE MICROPHONE	NEMA-1	2-GANG	CEILING	ABOVE CEILING	SURFACE			NONE	NONE	
MIC: 3											
S	CEILING MOUNTED SPEAKER	N/A	N/A	N.A.	CEILING	FLUSH TO CEILING		MATCH COVER COLOR TO CEILING FINISH	NONE	N.A.	
S: 10											
SCRN	PROJECTION SCREEN	N/A	REFER TO PLAN	N.A.	CEILING	N/A			NONE	HARDWIRED AC CONTROLLER	
SCRN: 6											
SP	WALL-MOUNTED LOUDSPEAKER	N/A	1-GANG	N.A.	WALL	FLUSH TO WALL		MATCH COVER COLOR TO CEILING FINISH	NONE	N.A.	
SP: 2											
VP	VIDEO PROJECTOR	NEMA-1	2-GANG	N.A.	CEILING	FLUSH TO CEILING		MATCH COVER COLOR	(2) ADJACENT	ADJACENT DUPLEX	
VP: 10											

Grand total: 62

NOLL & TAM ARCHITECTS
729 Heinz Avenue
Berkeley, CA 94710
tel 510.542.2200
fax 510.542.2201

ENGINEERING SEAL

LICENSED ARCHITECT
RYAN GNUSTI RASKOP
C-35434
RENEW: 10/31/2019
STATE OF CALIFORNIA

APPROVALS
FILE NUMBER: 07-C1
DIVISION OF THE STATE ARCHITECT
APP# 01-117630
ACS_____ FLS_____ SSS_____
Date:

Charles M. Salter ASSOCIATES INC

PROJECT TITLE
CONTRA COSTA CCD
D-4002
DVC SAN RAMON CAMPUS EXPANSION & RENOVATION

1690 Watermill Rd.
San Ramon, CA 94582

2 ASI-006

ISSUE TITLE
INCREMENT 1 - RENOVATION

ISSUE DATE 10/25/18
NOLL & TAM JOB NUMBER 21630

REVISIONS

#	DATE	DESCRIPTION
2	04/25/2019	CADAVER LAB AV REV
5	11/05/2019	AV SYSTEMS DRAWINGS

SHEET TITLE
AV JUNCTION BOX SCHEDULE, CONDUIT AND CABLE DIAGRAMS

SHEET NUMBER
5
T7.04.0

5

9/29/2021 1:26:21 PM 16-0633_DVC San Ramon Expansion_19_INC1_detached.rvt

FIRE ALARM SYMBOL LIST

NOTE: This is a standard symbol list and not all items listed may be used.

Abbreviations

AFF	ABOVE FINISHED FLOOR
ANSI	AMERICAN NATIONAL STANDARDS INSTITUTE
AWG	AMERICAN WIRE GAUGE
A	AMPERES, AMBER
AHJ	AUTHORITY HAVING JURISDICTION
BAS	BUILDING AUTOMATION SYSTEM
CLG	CEILING
C	CONDUIT, CLOSE, CONTROL
dB	DECIBEL
(X)	DEMOLISH
DTL	DETAIL
DIA	DIAMETER
DIM	DIMENSION
DIV	DIVISION
DWG	DRAWING
EA	EACH
EMT	ELECTRICAL METALLIC TUBING
(E)	EXISTING
FM	FACTORY MUTUAL
FA	FIRE ALARM
FACP	FIRE ALARM CONTROL PANEL
FMC	FLEXIBLE METAL CONDUIT
FT	FOOT, FEET
HT	HEIGHT
IN	INCH, INCHES
IMC	INTERMEDIATE METAL CONDUIT
LV	LOW VOLTAGE
mA	MILLIAMPERES
MIN	MINIMUM
MISC	MISCELLANEOUS
MT, MTD	MOUNT, MOUNTED
NEC	NATIONAL ELECTRIC CODE
NEMA	NATIONAL ELECTRICAL MANUFACTURERS ASSOCIATION
(N)	NEW
N/A	NOT APPLICABLE
N.I.C.	NOT IN CONTRACT
NTS	NOT TO SCALE
PNL	PANEL
PWR	POWER
QTY	QUANTITY
REF	REFERENCE
RFI	REQUEST FOR INFORMATION
RM	ROOM
SHT	SHEET
SIM	SIMILAR
STD	STANDARD
SPD	SURGE PROTECTION DEVICE
TBD	TO BE DETERMINED
TYP	TYPICAL
UL	UNDERWRITERS LABORATORIES
VFD	VARIABLE FREQUENCY DRIVE
V	VOLTS, VOLTAGE
WP	WEATHERPROOF
WG	WIRE GUARD

Connections / Equipment

J OR J — JUNCTION BOX

Fire Alarm

FACP — FIRE ALARM CONTROL PANEL
EXISTING SIEMENS MXL

NAC — NOTIFICATION APPLIANCE CIRCUIT PANEL
EXISTING WHEELOCK PS-12/24-8

FAA — FIRE ALARM ANNUNCIATOR PANEL
EXISTING SIEMENS RCC-1

PULL STATION
SIEMENS MSI-20B
CSFM: 7150-0067:0036

SMOKE DETECTOR
SIEMENS FP-11
CSFM: 7272-0067:0203

SMOKE DETECTOR, DUCT MOUNTED
SIEMENS AD-11XPR
CSFM:3420-0067:0116

HORN, WEATHERPROOF
WHEELOCK AH-24WP
CSFM: 7125-0785:0131

HORN/STROBE COMBINATION (# INDICATES MINIMUM CANDELA RATING)
WHEELOCK HSR
CSFM: 7125-0785:0168

STROBE, WALL MOUNTED (# INDICATES MINIMUM CANDELA RATING)
WHEELOCK RSS-24MCW-FW
CSFM: 7125-0785:0141

ADDRESSABLE OUTPUT MODULE
SIEMENS TRI-R
CSFM: 7300-0067:0152

General

X / X — DETAIL NUMBER AND SHEET LOCATION

1 — KEYED NOTE

GENERAL FIRE ALARM NOTES

A. THE SCOPE OF THIS PROJECT IS TO MODIFY AND EXTEND AN EXISTING, MANUAL AND AUTOMATIC, CLASS B, FIRE ALARM SYSTEM.

B. MANUAL PULL STATIONS ARE PROVIDED AT EACH BUILDING EXIT.

C. AUTOMATIC SMOKE DETECTORS ARE PROVIDED FOR LIFE SAFETY FUNCTION ACTIVATION AT AIR HANDLING UNITS OVER 2000 CFM CAPACITY, AT MAGNETICALLY HELD FIRE DOORS, AND TO PROTECT THE FIRE ALARM EQUIPMENT.

D. MONITOR MODULES ARE PROVIDED AT THE FIRE SPRINKLER RISER.

E. AUDIBLE AND VISIBLE NOTIFICATION APPLIANCES ARE LOCATED THROUGHOUT THE BUILDING.

FIRE ALARM ADDRESS LEGEND

XX## — DEVICE ADDRESS

WHERE: XX = LOOP NUMBER
- DEVICE ADDRESS

NOTIFICATION CIRCUIT

NXX #-#
- CIRCUIT #
- DEVICE #
- NOTIFICATION PANEL

FIRE ALARM MONITORING NOTE

AUTOMATIC FIRE ALARM SYSTEM SHALL TRANSMIT THE ALARM, SUPERVISORY AND TROUBLE SIGNALS TO A PROPRIETARY SUPERVISING STATION AS REQUIRED BY NFPA 72. THE SUPERVISING STATION SHALL BE LISTED AS UUKA BY UNDERWRITERS LABORATORY OR SHALL MEET THE REQUIREMENTS OF FACTORY MUTUAL RESEARCH APPROVAL STANDARD 3011. SUPERVISION OF SYSTEM AND LEASED TELEPHONE LINES SHALL BE ARRANGED BY OWNER.

FIRE ALARM WIRE SCHEDULE

SYMBOL	DESCRIPTION
A	1 PAIR 16 AWG TWISTED SHIELDED
B	1 PAIR 12 AWG
C	1 PAIR 16 AWG TW/SHLD SUITABLE FOR WET LOCATION
D	1 PAIR 12 AWG SUITABLE FOR WET LOCATION

NOTE: LETTER DESIGNATION INDICATES CABLE TYPE. NUMBER OF HASH MARKS INDICATES QUANTITY OF CABLES. E.G., ⫩ , INDICATES TWO, #16 CABLES.
A

DSA NOTES

1. APPLICABLE STANDARD AND CODES:
   2016 NFPA 72
   2016 CALIFORNIA FIRE CODE
   2016 CALIFORNIA BUILDING CODE
   2016 CALIFORNIA MECHANICAL CODE
   2016 CALIFORNIA ELECTRICAL CODE
2. INSTALLATION OF THE SYSTEM SHALL NOT BE STARTED UNTIL DETAILED DESIGN DOCUMENTS AND SPECIFICATIONS, INCLUDING STATE FIRE MARSHAL LISTING NUMBERS FOR EACH COMPONENT OF THE SYSTEM, HAVE BEEN APPROVED BY DSA.
3. UPON COMPLETION OF THE INSTALLATION OF THE SYSTEM, A SATISFACTORY TEST OF THE ENTIRE SYSTEM SHALL BE MADE IN THE PRESENCE OF A DSA PROJECT INSPECTOR.
4. A STAMPED SET OF APPROVED FIRE ALARM DESIGN DOCUMENTS SHALL BE MAINTAINED ON THE JOB SITE AND USED FOR INSTALLATION.
5. ANY DISCREPANCIES BETWEEN THE DRAWINGS AND THE CODE OR RECOGNIZED STANDARDS SHALL BE BROUGHT TO THE ATTENTION OF DSA AND THE ARCHITECT/ENGINEER OF THE PROJECT.
6. DSA, ARCHITECT/ENGINEER AND OWNER SHALL BE NOTIFIED A MINIMUM OF 48 HOURS PRIOR TO THE FINAL INSPECTION AND /OR TESTING.
7. ALL PENETRATIONS THROUGH RATED ASSEMBLIES REQUIRING OPENING PROTECTION SHALL BE PROVIDED WITH A PENETRATION FIRE STOP SYSTEM AS IDENTIFIED IN CBC CHAPTER 7, UL OR OTHER LAB TESTING CRITERIA. APPROVED TYPE OF MATERIALS SHALL BE IDENTIFIED WITHIN THE SPECIFICATION WITHIN THE FIRE ALARM SECTION.
8. WALL MOUNTED VISUAL NOTIFICATION APPLIANCES SHALL HAVE THEIR BOTTOMS MOUNTED AT 80" MINIMUM AND 96" MAXIMUM ABOVE FINISHED FLOOR.
9. WALL MOUNTED AUDIBLE NOTIFICATION APPLIANCES SHALL HAVE THEIR TOPS MOUNTED AT 90" MINIMUM AND 100" MAXIMUM ABOVE FINISHED FLOOR AND NO CLOSER THAN 6" TO A HORIZONTAL STRUCTURE.
10. AUDIBLE DEVICES SHALL PROVIDE A SOUND PRESSURE LEVEL OF 15 DECIBELS (dBA) ABOVE THE AVERAGE AMBIENT SOUND LEVEL OR 5 dBA ABOVE THE MAXIMUM SOUND LEVEL HAVING A DURATION OF AT LEAST 60 SECONDS, WHICHEVER IS GREATER, IN EVERY OCCUPIABLE SPACE WITHIN THE BUILDING.
11. AUDIBLE APPLIANCES SHALL BE SYNCHRONIZED TEMPORAL CODE 3 PATTERN.
12. THE CONTRACTOR SHALL ADJUST/INSTALL ALL DEVICES TO MAXIMIZE PERFORMANCE AND TO MINIMIZE FALSE ALARMS.
13. VISUAL APPLIANCES SHOULD NOT EXCEED 2 FLASHES PER SECOND AND SHOULD NOT BE SLOWER THAN 1 FLASH EVERY SECOND. THE DEVICE SHALL HAVE A PULSING LIGHT SOURCE NOT LESS THAN 15 CANDELA. VISUAL APPLIANCES WITHIN 55' FROM EACH OTHER SHALL BE SYNCHRONIZED.
14. UNDERGROUND AND EXTERIOR CONDUITS TO HAVE WATERTIGHT FITTINGS AND WIRE TO BE APPROVED FOR WET LOCATIONS.
15. ALL FIRE ALARM WIRING SHALL BE FLP OR FPLP (FIRE POWER LIMITED OR FIRE POWER LIMITED PLENUM) AS REQUIRED FOR APPLICATION. WIRING IN CONDUIT ABOVE GROUND MAY BE THHN OR THWN.
16. PER CEC STANDARDS, ALL WIRING IS TO BE PULLED THROUGH EACH JUNCTION BOX AND CONNECTED DIRECTLY TO EACH FIRE DEVICE. DO NOT SPLICE THE WIRE. THERE MUST BE AT LEAST 6" OF LEAD WIRE FROM THE BOX TO THE DEVICE. ALL BOXES TO BE SIZED PER CEC.
17. SMOKE DETECTORS SHALL NOT BE INSTALLED CLOSER THAN 1' FROM FIRE SPRINKLERS OR 3' FROM ANY SUPPLY DIFFUSER. IN AREA OF CONSTRUCTION OR POSSIBLE DAMAGE/CONTAMINATION, NEWLY INSTALLED FIRE ALARM DEVICES SHALL BE COVERED UNTIL THAT AREA IS READY TO BE TURNED OVER TO THE OWNER.
18. ALL FIRE ALARM CIRCUITS SHALL BE IN CONDUIT, SURFACE RACEWAY OR OPEN RUN ABOVE CEILINGS, UNDER FLOORS AND IN WALLS IN A NEAT AND PROTECTED MANNER AS INDICATED ON DESIGN DOCUMENTS. EXPOSED CIRCUITS ARE ONLY PERMITTED WHEN NOTED AS EXPOSED ON DESIGN DOCUMENTS.
19. FIRE ALARM PANEL, REMOTE PANELS, POWER SUPPLIES AND COMPONENTS SHALL BE SECURED TO MOUNTING SURFACES PER MANUFACTURERS SPECIFICATIONS. NO SINGLE DEVICE SHALL EXCEED THE WEIGHT OF 20 LBS. WITHOUT SPECIAL MOUNTING DETAILS.
20. A DEDICATED BRANCH CIRCUIT SHALL BE PROVIDED FOR FIRE ALARM EQUIPMENT. THIS CIRCUIT SHALL BE ENERGIZED FROM THE COMMON USE AREA PANEL AND SHALL HAVE NO OTHER OUTLETS. THE BREAKER SHALL HAVE A RED LOCKING DEVICE TO BLOCK THE HANDLE IN THE "ON" POSITION. THE CIRCUIT BREAKER SHALL BE LABELED "FIRE ALARM CIRCUIT CONTROL". CIRCUIT ID TO BE LABELED AT FIRE PANEL/EXTENDERS.
21. THE INSTALLING CONTRACTOR SHALL PROVIDE A RECORD OF COMPLETION PER NFPA 72, FIGURE 10.18.2.1.1.
22. CONTROL PANELS AND REMOTE ANNUNCIATORS SHALL BE INSTALLED WITH THEIR BOTTOMS MOUNTED AT 48" ABOVE FINISHED FLOOR.
23. THE INSTALLING CONTRACTOR SHALL PROVIDE SYSTEM PROGRAMMING FOR SUPERVISORY MONITORING PER CBC SECTION 901.6.2.
24. SUPERVISORY MONITORING SHALL BE TESTED AND VERIFIED AS SENDING CORRECT SIGNALS IN CONJUNCTION WITH FINAL ACCEPTANCE TEST.
25. OWNER SHALL BE RESPONSIBLE FOR ESTABLISHING A FIRE SYSTEM MONITORING CONTRACT OR PROVISIONS.

EXISTING SEQUENCE OF OPERATIONS MATRIX

DEVICE ACTION	INITIATING DEVICES				
	MANUAL PULL STATION	SMOKE DETECTOR HEAT DETECTOR	SMOKE DUCT DETECTOR	SPRINKLER WATER FLOW	SPRINKLER WATER TAMPER
SOUND CONTROL PANEL TROUBLE BUZZER	ON WIRING FAULT	ON WIRING FAULT	ON WIRING FAULT	ON WIRING FAULT	ON WIRING FAULT
ACTIVATE RELAY FOR MONITORING (ALARM OR TROUBLE)	YES	YES	YES	YES	YES
ANNUNCIATE AT FIRE ALARM CONTROL PANEL (ALARM OR TROUBLE)	YES	YES	YES	YES	TROUBLE ONLY
ANNUNCIATE AT REMOTE FIRE ALARM ANNUNCIATOR (ALARM OR TROUBLE)	YES	YES	YES	YES	TROUBLE ONLY
SEND SIGNAL TO CENTRAL STATION SERVICE COMPANY	YES	YES	YES	YES	YES
ACTIVATE AUDIBLE/VISUAL ALARM SIGNAL THROUGHOUT BUILDING	YES	YES	YES	YES	NO
SHUTDOWN AIR HANDLING UNITS (HVAC)	NO	YES	YES	NO	NO
SHUTDOWN FIRE/SMOKE DAMPERS	YES	YES	YES	YES	NO

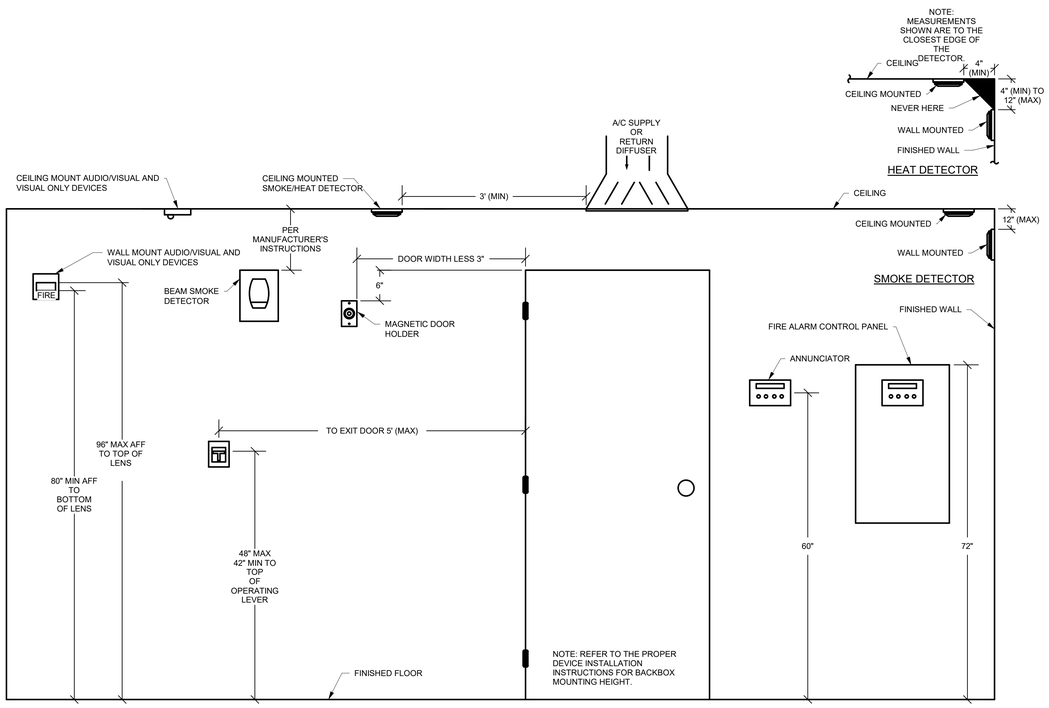

1 DEVICE MOUNTING HEIGHTS

NO SCALE

DETAIL KEYNOTES

1 AIR HANDLING UNIT (AHU) STARTER/VFD.

2 FIRE ALARM ADDRESSABLE RELAY. CONNECT TO EMERGENCY STOP INPUT ON FAN CONTROLLER. PROGRAM TO STOP FAN ON ACTIVATION OF ASSOCIATED SMOKE DETECTION. PROVIDE RELAY FOR EACH FAN CONTROLLER.

3 FIRE ALARM ADDRESSABLE DUCT SMOKE DETECTOR.

4 FIRE ALARM ADDRESSABLE RELAY. DIGITAL INPUT TO BAS TO INITIATE ADDITIONAL AHU SHUT DOWN SEQUENCE.

5 BAS CONNECTION TO FAN UNIT CONTROLLER.

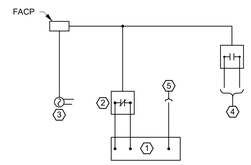

2 HVAC FAN SHUT DOWN DIAGRAM

NO SCALE

SHEET INDEX

FA0.01.1	SYMBOLS LIST AND GENERAL NOTES - FIRE ALARM
FA2.30A.1	1ST FLOOR OVERALL PLAN - FIRE ALARM
FA2.30B.1	2ND FLOOR OVERALL PLAN - FIRE ALARM
FA2.32.1	DEMO & NEW - 1ST FLOOR - EAST - CLASSROOM - PAINTING STUDIO - FIRE ALARM
FA2.33.1	DEMO & NEW - 1ST FLOOR - EAST - CLASSROOM - DRAWING STUDIO - FIRE ALARM
FA2.34.1	DEMO & NEW - 1ST FLOOR - EAST - BOOKSTORE - FIRE ALARM
FA2.35.1	DEMO & NEW - 1ST FLOOR - WEST - ASSESSMENT LAB - FIRE ALARM
FA2.37.1	DEMO & NEW - 2ND FLOOR - EAST - A&P LAB - FIRE ALARM
FA2.38.1	EXISTING - PENTHOUSE FLOOR PLAN - EAST - FIRE ALARM
FA5.01.1	DETAILS - FIRE ALARM

NOLL & TAM ARCHITECTS
729 Heinz Avenue
Berkeley, CA 94710
tel 510.542.2200
fax 510.542.2201

ARCHITECTS SEAL

REGISTERED PROFESSIONAL ENGINEER JASON LAU No. E16806 ELECTRICAL STATE OF CALIFORNIA

APPROVALS

FILE NUMBER: 07-C1

DIVISION OF THE STATE ARCHITECT
APP# 01-117630
ACS_____ FLS_____ SSS_____
Date:

PROJECT 2016-0538
CONTACT Joe Ripp

INTERFACE ENGINEERING
135 Main Street
Suite 400
San Francisco, CA 94105
TEL 415.489.7240
FAX 415.489.7289
www.interfaceengineering.com

PROJECT TITLE

CONTRA COSTA CCD
D-4002
DVC SAN RAMON CAMPUS EXPANSION & RENOVATION

1690 Watermill Rd.
San Ramon, CA 94582

ISSUE TITLE

INCREMENT 1

ISSUE DATE 11/30/2018
NOLL & TAM JOB NUMBER 21630

REVISIONS

NO.	DATE	DESCRIPTION

SHEET TITLE

SYMBOLS LIST AND GENERAL NOTES - FIRE ALARM

SHEET NUMBER

FA0.01.1

9/29/2021 2:52:02 PM

SHEET KEYNOTES

1. PROVIDE 2 INCH CONDUIT AND CONNECTION TO FACP IN MAIN MDF FOR FUTURE LLRC BUILDING. INSTALLATION OF CONDUIT TO OCCUR IN COMMON TRENCH WITH TELCOMMUNICATION CONDUITS. VERIFY EXACT CONDUIT ROUTING WITH TELECOMMUNICATIONS DESIGN.

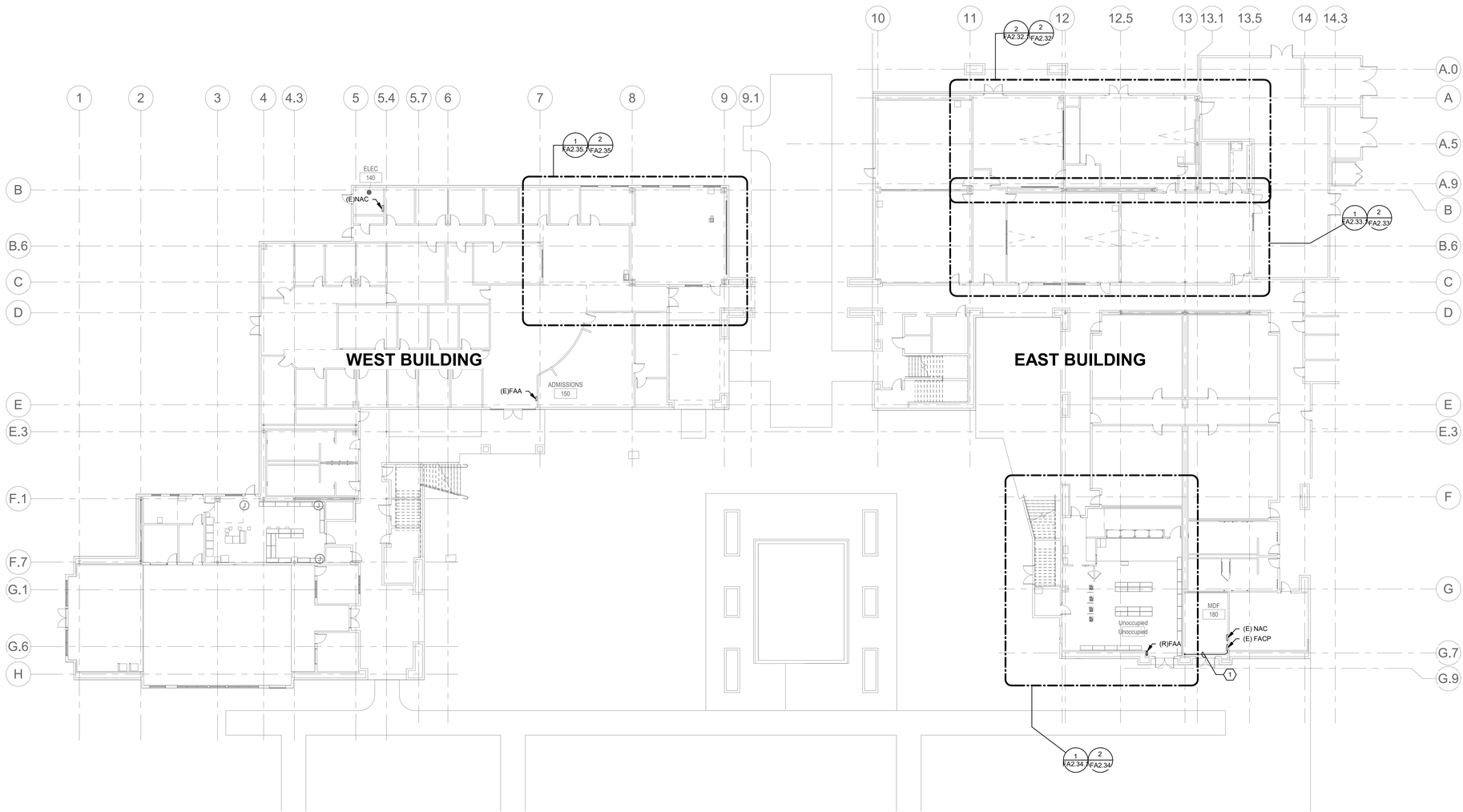

1 1ST FLOOR OVERALL PLAN - FIRE ALARM

0' 8' 16' 32'

1/16" = 1'-0"

9/29/2021 2:52:05 PM

NOLL & TAM ARCHITECTS

729 Heinz Avenue
Berkeley, CA 94710
tel 510.542.2200
fax 510.542.2201

ARCHITECTS SEAL

REGISTERED PROFESSIONAL ENGINEER
JASON LAU
No. E16806
ELECTRICAL
STATE OF CALIFORNIA

APPROVALS

FILE NUMBER: 07-C1

DIVISION OF THE STATE ARCHITECT
APP# 01-117630
ACS_____ FLS_____ SSS_____
Date:

PROJECT 2016-0538
CONTACT Joe Ripp

INTERFACE ENGINEERING
135 Main Street
Suite 400
San Francisco, CA 94105
TEL 415.489.7240
FAX 415.489.7289
www.interfaceengineering.com

PROJECT TITLE

CONTRA COSTA CCD
D-4002
DVC SAN RAMON CAMPUS EXPANSION & RENOVATION

1690 Watermill Rd.
San Ramon, CA 94582

ISSUE TITLE

INCREMENT 1

ISSUE DATE	11/30/2018
NOLL & TAM JOB NUMBER	21630

REVISIONS

NO.	DATE	DESCRIPTION

SHEET TITLE

1ST FLOOR OVERALL PLAN - FIRE ALARM

SHEET NUMBER

FA2.30A.1

1 2ND FLOOR OVERALL PLAN - FIRE ALARM

0' 4' 8' 16'

1/16" = 1'-0"

9/29/2021 2:52:07 PM

NOLL & TAM ARCHITECTS

729 Heinz Avenue
Berkeley, CA 94710
tel 510.542.2200
fax 510.542.2201

ARCHITECTS SEAL

REGISTERED PROFESSIONAL ENGINEER
JASON LAU
No. E16806
ELECTRICAL
STATE OF CALIFORNIA

APPROVALS

FILE NUMBER: 07-C1

DIVISION OF THE STATE ARCHITECT

APP# 01-117630

ACS_____ FLS_____ SSS_____

Date:

PROJECT 2016-0538

CONTACT Joe Ripp

INTERFACE ENGINEERING

135 Main Street
Suite 400
San Francisco, CA 94105
TEL 415.489.7240
FAX 415.489.7289
www.interfaceengineering.com

PROJECT TITLE

CONTRA COSTA CCD
D-4002
DVC SAN RAMON CAMPUS EXPANSION & RENOVATION

1690 Watermill Rd.
San Ramon, CA 94582

ISSUE TITLE

INCREMENT 1

ISSUE DATE	11/30/2018
NOLL & TAM JOB NUMBER	21630

REVISIONS

NO.	DATE	DESCRIPTION

SHEET TITLE

2ND FLOOR OVERALL PLAN - FIRE ALARM

SHEET NUMBER

FA2.30B.1

GENERAL SHEET NOTES

A. NO FIRE ALARM WORK THIS SHEET. SHOWN FOR REFERENCE ONLY.

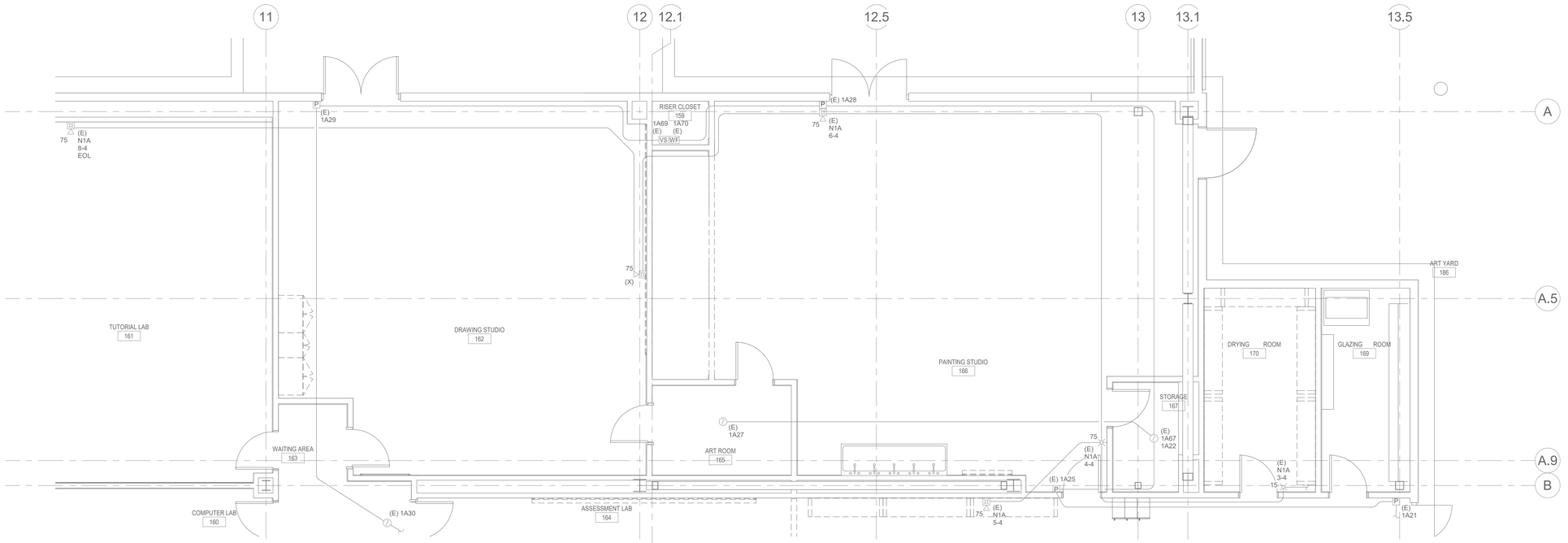

N

1 DEMO - 1ST FLOOR PLAN - CLASSROOM - PAINTING STUDIO - FIRE ALARM

0' 2' 4' 8'

1/4" = 1'-0"

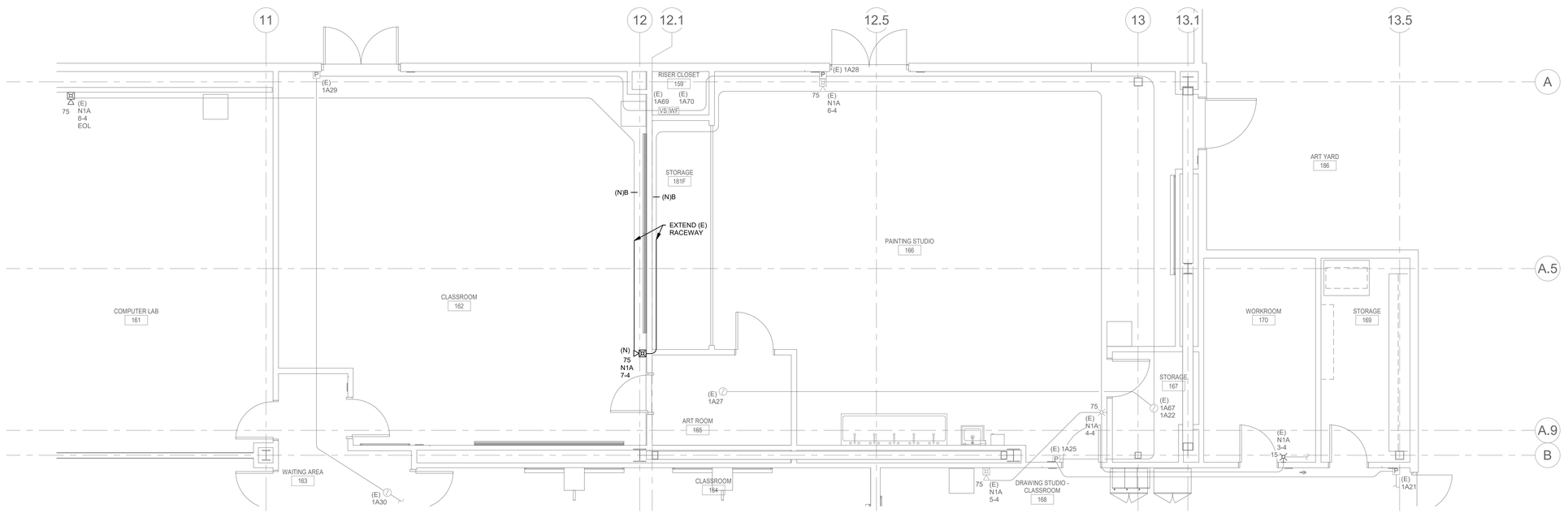

N

2 NEW - 1ST FLOOR PLAN - CLASSROOM - PAINTING STUDIO - FIRE ALARM

0' 2' 4' 8'

1/4" = 1'-0"

9/29/2021 2:52:10 PM

NOLL & TAM ARCHITECTS

729 Heinz Avenue
Berkeley, CA 94710
tel 510.542.2200
fax 510.542.2201

ARCHITECTS SEAL

REGISTERED PROFESSIONAL ENGINEER
JASON LAU
No. E16806
ELECTRICAL
STATE OF CALIFORNIA

APPROVALS

FILE NUMBER: 07-C1

DIVISION OF THE STATE ARCHITECT

APP# 01-117630

ACS_____ FLS_____ SSS_____

Date:

PROJECT 2016-0538

CONTACT Joe Ripp

INTERFACE ENGINEERING

135 Main Street
Suite 400
San Francisco, CA 94105
TEL 415.489.7240
FAX 415.489.7289
www.interfaceengineering.com

PROJECT TITLE

CONTRA COSTA CCD
D-4002
DVC SAN RAMON CAMPUS EXPANSION & RENOVATION

1690 Watermill Rd.
San Ramon, CA 94582

ISSUE TITLE

INCREMENT 1

ISSUE DATE	11/30/2018
NOLL & TAM JOB NUMBER	21630

REVISIONS

NO.	DATE	DESCRIPTION

SHEET TITLE

DEMO & NEW - 1ST FLOOR - EAST - CLASSROOM - PAINTING STUDIO - FIRE ALARM

SHEET NUMBER

FA2.32.1

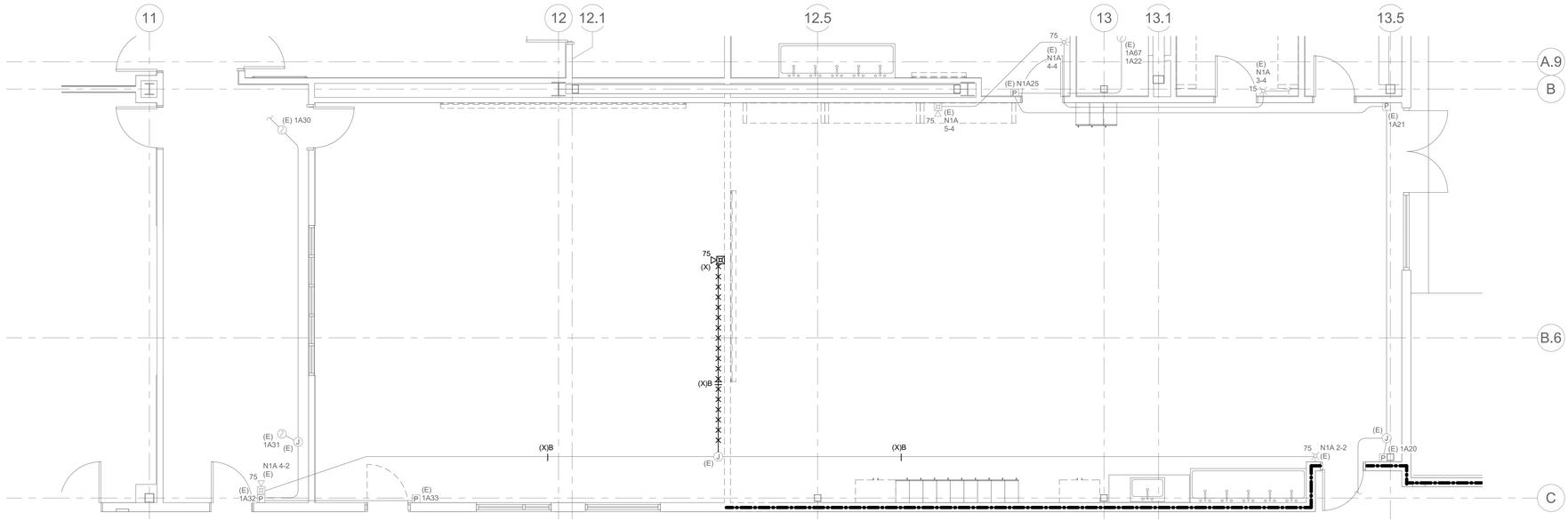

1 DEMO - 1ST FLOOR PLAN - CLASSROOM - CERAMIC STUDIO - FIRE ALARM

0' 2' 4' 8'

1/4" = 1'-0"

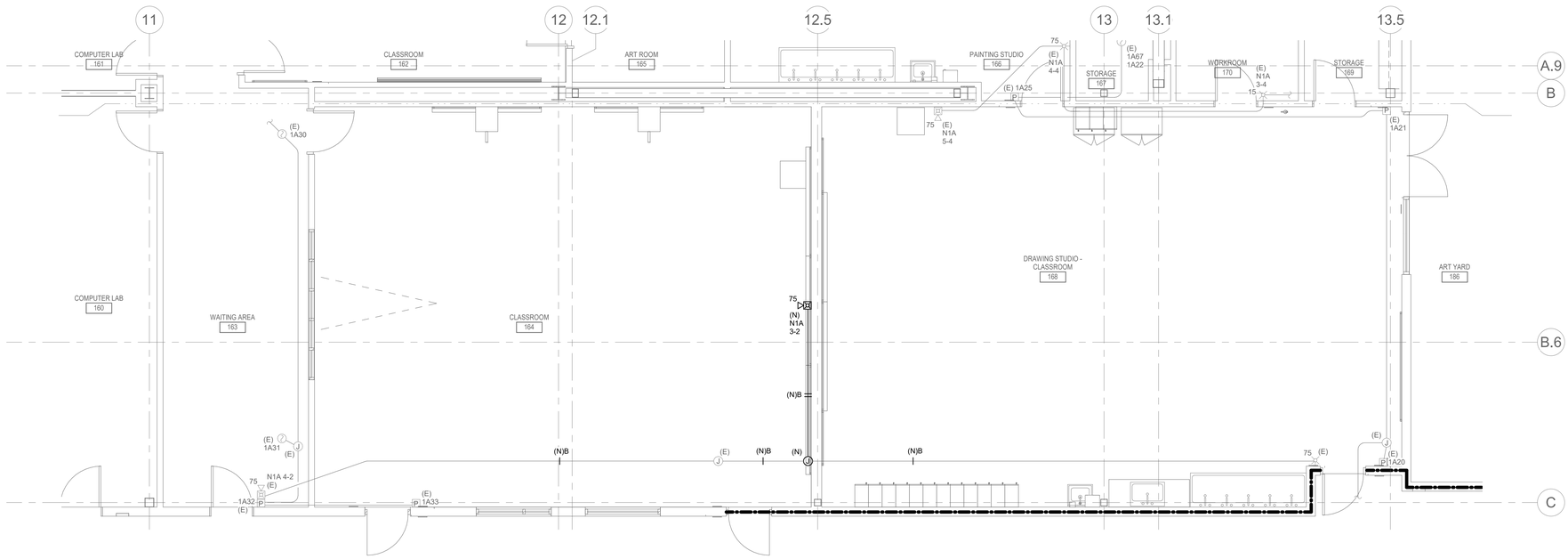

2 NEW - 1ST FLOOR PLAN - CLASSROOM - DRAWING STUDIO - FIRE ALARM

0' 2' 4' 8'

1/4" = 1'-0"

9/29/2021 2:52:12 PM

NOLL & TAM ARCHITECTS

729 Heinz Avenue
Berkeley, CA 94710
tel 510.542.2200
fax 510.542.2201

ARCHITECTS SEAL

REGISTERED PROFESSIONAL ENGINEER
JASON LAU
No. E16806
ELECTRICAL
STATE OF CALIFORNIA

APPROVALS

FILE NUMBER: 07-C1

DIVISION OF THE STATE ARCHITECT

APP# 01-117630

ACS_____ FLS_____ SSS_____

Date:

PROJECT 2016-0538

CONTACT Joe Ripp

INTERFACE ENGINEERING

135 Main Street
Suite 400
San Francisco, CA 94105
TEL 415.489.7240
FAX 415.489.7289
www.interfaceengineering.com

PROJECT TITLE

CONTRA COSTA CCD

D-4002

DVC SAN RAMON CAMPUS EXPANSION & RENOVATION

1690 Watermill Rd.
San Ramon, CA 94582

ISSUE TITLE

INCREMENT 1

ISSUE DATE	11/30/2018
NOLL & TAM JOB NUMBER	21630

REVISIONS

NO.	DATE	DESCRIPTION

SHEET TITLE

DEMO & NEW - 1ST FLOOR - EAST - CLASSROOM - DRAWING STUDIO - FIRE ALARM

SHEET NUMBER

FA2.33.1

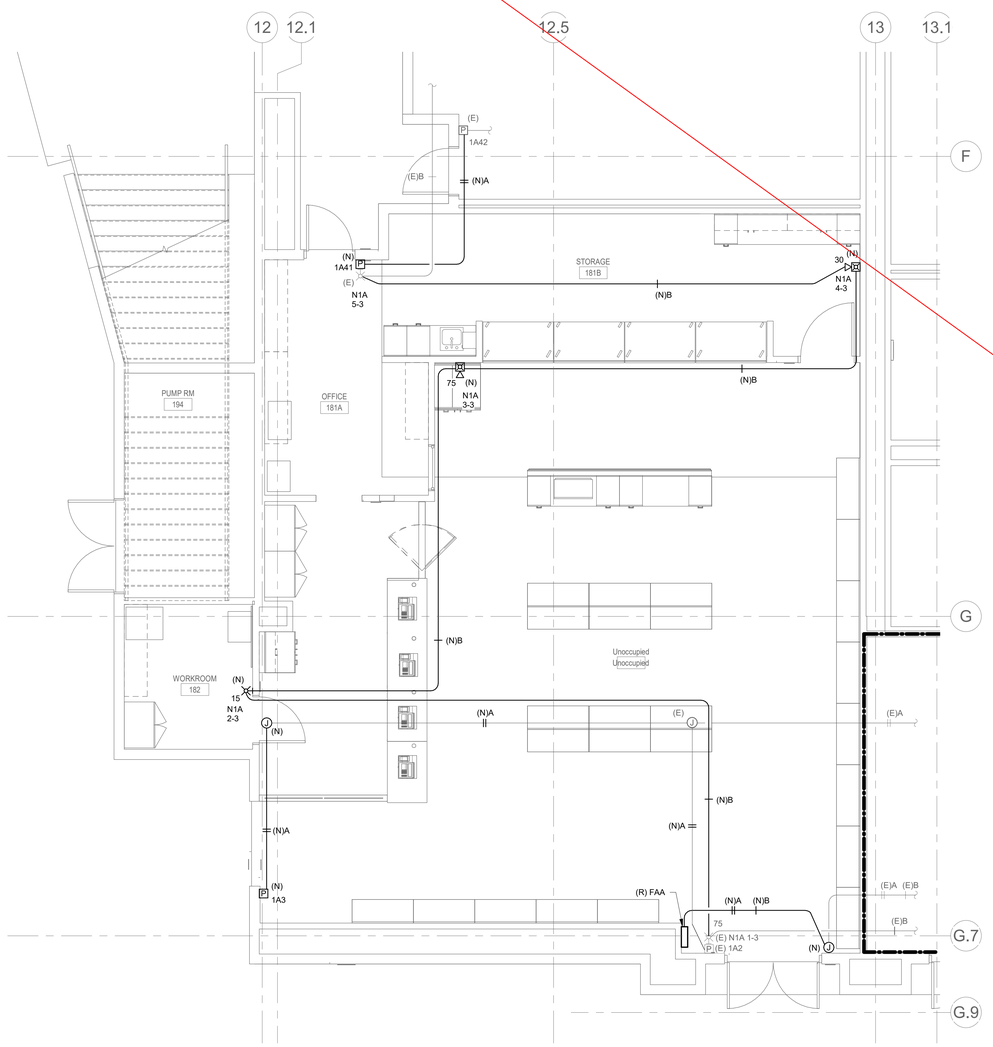

2 NEW - 1ST FLOOR PLAN - BOOKSTORE - FIRE ALARM

0' 2' 4' 8'

1/4" = 1'-0"

REMOVED FROM SCOPE CCDA-8

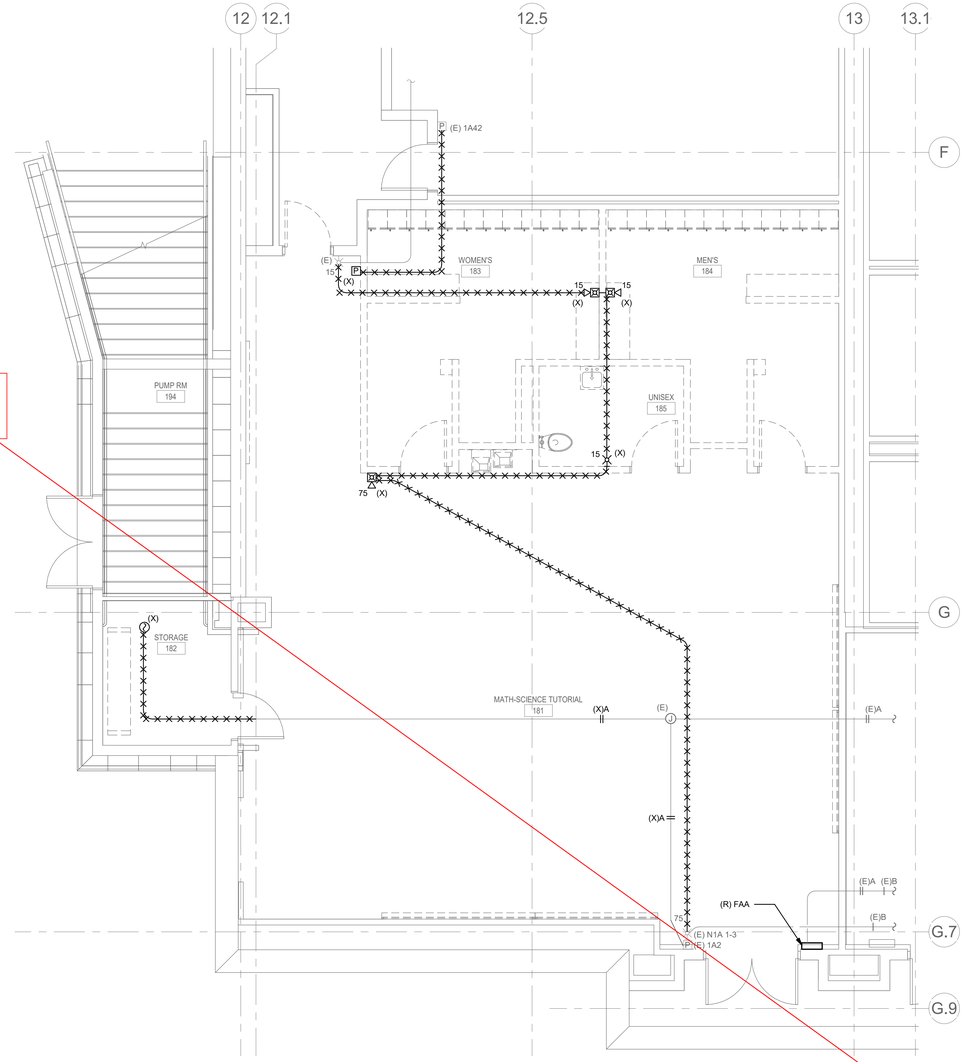

1 DEMO - 1ST FLOOR PLAN - MS TUTORIAL - FIRE ALARM

0' 2' 4' 8'

1/4" = 1'-0"

9/29/2021 2:52:15 PM

NOLL & TAM ARCHITECTS

729 Heinz Avenue
Berkeley, CA 94710
tel 510.542.2200
fax 510.542.2201

ARCHITECTS SEAL

REGISTERED PROFESSIONAL ENGINEER
JASON LAU
No. E16806
ELECTRICAL
STATE OF CALIFORNIA

APPROVALS

FILE NUMBER: 07-C1

DIVISION OF THE STATE ARCHITECT

APP# 01-117630

ACS_____ FLS_____ SSS_____

Date:

PROJECT 2016-0538

CONTACT Joe Ripp

INTERFACE ENGINEERING

135 Main Street
Suite 400
San Francisco, CA 94105
TEL 415.489.7240
FAX 415.489.7289
www.interfaceengineering.com

PROJECT TITLE

CONTRA COSTA CCD

D-4002

DVC SAN RAMON CAMPUS EXPANSION & RENOVATION

1690 Watermill Rd.
San Ramon, CA 94582

ISSUE TITLE

INCREMENT 1

ISSUE DATE	11/30/2018
NOLL & TAM JOB NUMBER	21630

REVISIONS

	DATE	DESCRIPTION

SHEET TITLE

DEMO & NEW - 1ST FLOOR - EAST - BOOKSTORE - FIRE ALARM

SHEET NUMBER

FA2.34.1

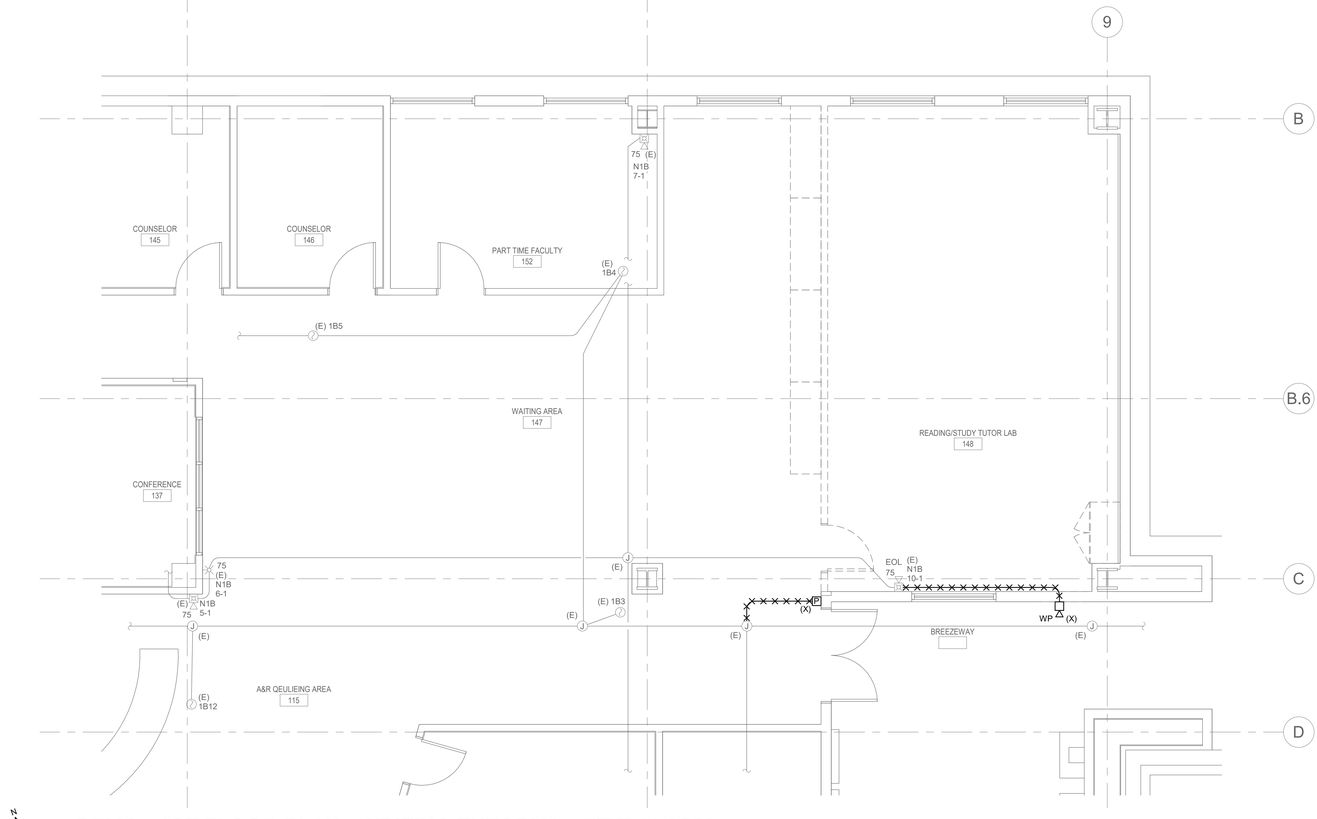

1 DEMO - 1ST FLOOR PLAN - WRITING TUTORIAL - FIRE ALARM

1/4" = 1'-0"

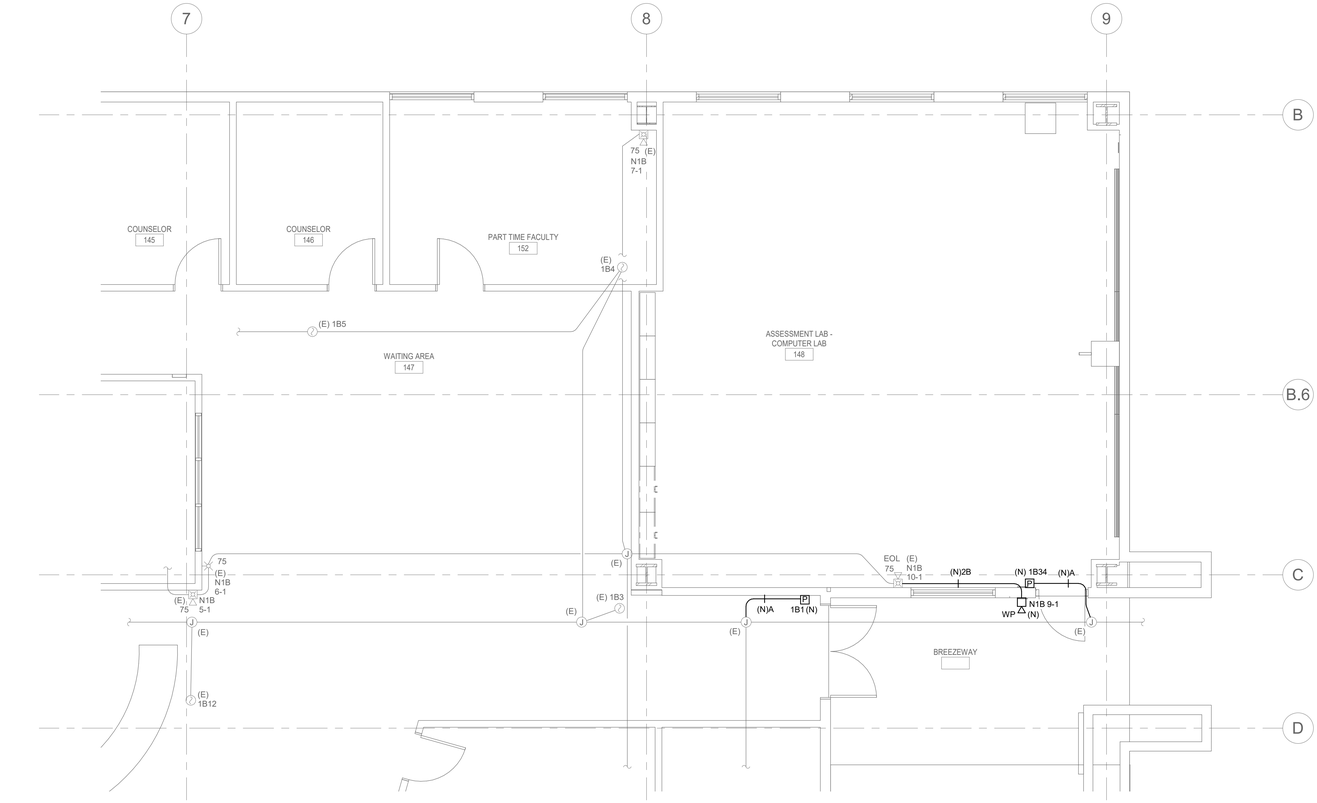

2 NEW - 1ST FLOOR PLAN - ASSESSMENT LAB - FIRE ALARM

1/4" = 1'-0"

NOLL & TAM ARCHITECTS

729 Heinz Avenue
Berkeley, CA 94710
tel 510.542.2200
fax 510.542.2201

ARCHITECTS SEAL

REGISTERED PROFESSIONAL ENGINEER
JASON LAU
No. E16806
ELECTRICAL
STATE OF CALIFORNIA

APPROVALS

FILE NUMBER: 07-C1

DIVISION OF THE STATE ARCHITECT
APP# 01-117630
ACS_____ FLS_____ SSS_____
Date:

PROJECT 2016-0538
CONTACT Joe Ripp

INTERFACE ENGINEERING
135 Main Street
Suite 400
San Francisco, CA 94105
TEL 415.489.7240
FAX 415.489.7289
www.interfaceengineering.com

PROJECT TITLE

CONTRA COSTA CCD
D-4002
DVC SAN RAMON CAMPUS EXPANSION & RENOVATION

1690 Watermill Rd.
San Ramon, CA 94582

ISSUE TITLE

INCREMENT 1

ISSUE DATE	11/30/2018
NOLL & TAM JOB NUMBER	21630

REVISIONS

NO.	DATE	DESCRIPTION

SHEET TITLE

DEMO & NEW - 1ST FLOOR - WEST - ASSESSMENT LAB - FIRE ALARM

SHEET NUMBER

FA2.35.1

9/29/2021 2:52:17 PM

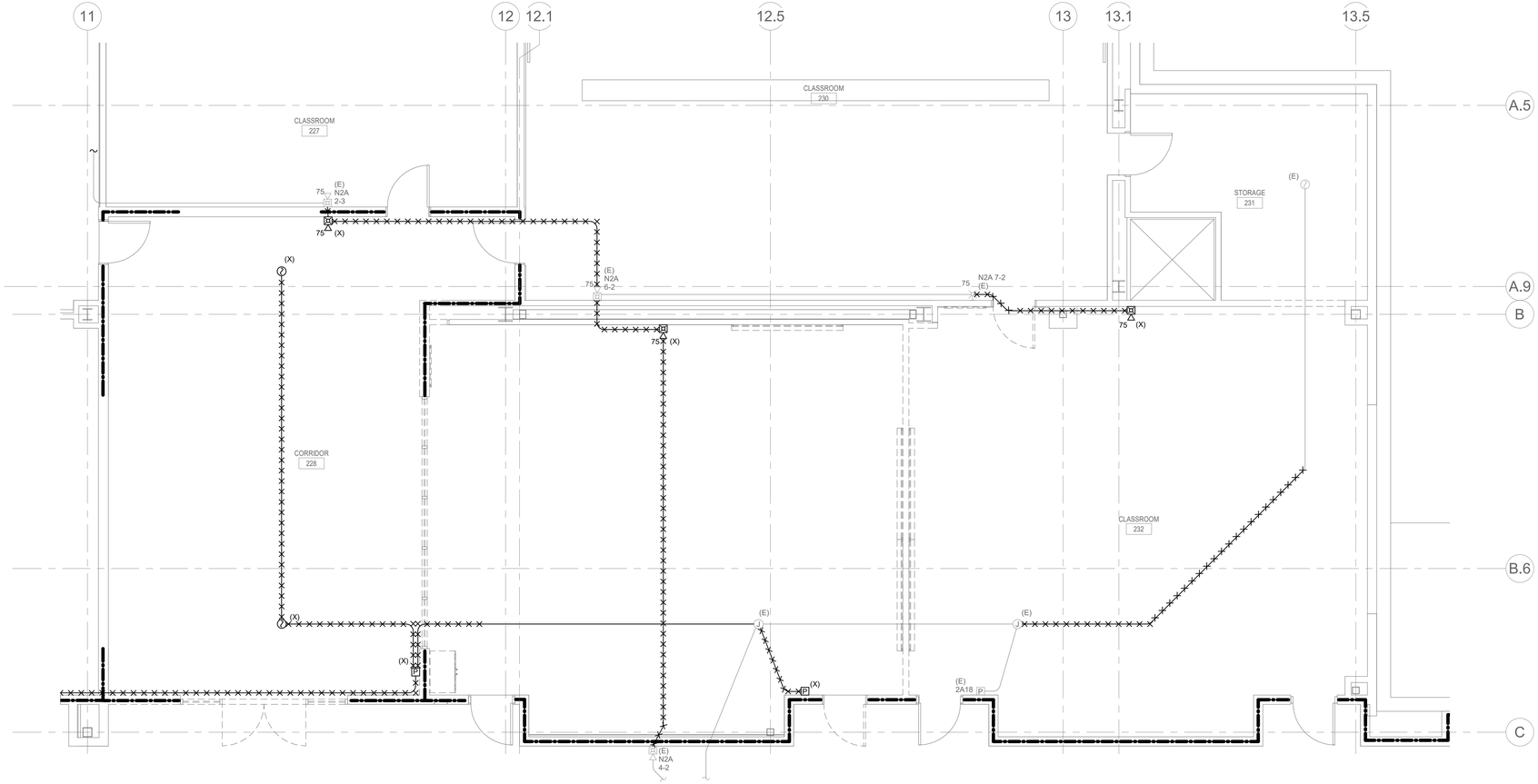

1 DEMO - 2ND FLOOR PLAN - CLASSROOMS - FIRE ALARM

0' 2' 4' 8'

1/4" = 1'-0"

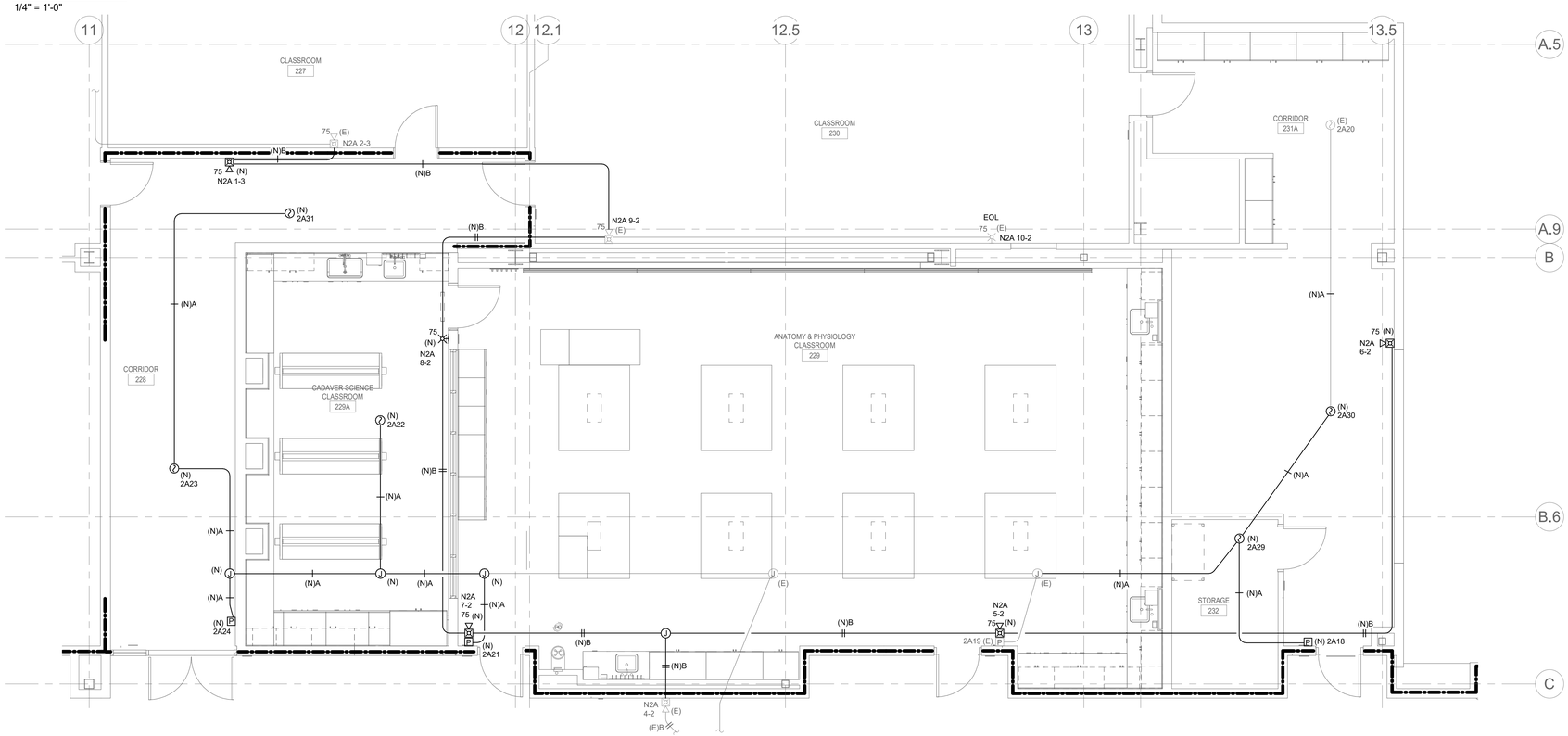

2 NEW - 2ND FLOOR PLAN - A&P LAB - FIRE ALARM

0' 2' 4' 8'

1/4" = 1'-0"

9/29/2021 2:52:19 PM

NOLL & TAM ARCHITECTS

729 Heinz Avenue
Berkeley, CA 94710
tel 510.542.2200
fax 510.542.2201

ARCHITECTS SEAL

REGISTERED PROFESSIONAL ENGINEER
JASON LAU
No. E16806
ELECTRICAL
STATE OF CALIFORNIA

APPROVALS

FILE NUMBER: 07-C1

DIVISION OF THE STATE ARCHITECT

APP# 01-117630

ACS_____ FLS_____ SSS_____

Date:

PROJECT 2016-0538

CONTACT Joe Ripp

INTERFACE ENGINEERING

135 Main Street
Suite 400
San Francisco, CA 94105
TEL 415.489.7240
FAX 415.489.7289
www.interfaceengineering.com

PROJECT TITLE

CONTRA COSTA CCD

D-4002
DVC SAN RAMON CAMPUS EXPANSION & RENOVATION

1690 Watermill Rd.
San Ramon, CA 94582

ISSUE TITLE

INCREMENT 1

ISSUE DATE	11/30/2018
NOLL & TAM JOB NUMBER	21630

REVISIONS

NO.	DATE	DESCRIPTION

SHEET TITLE

DEMO & NEW - 2ND FLOOR - EAST - A&P LAB - FIRE ALARM

SHEET NUMBER

FA2.37.1

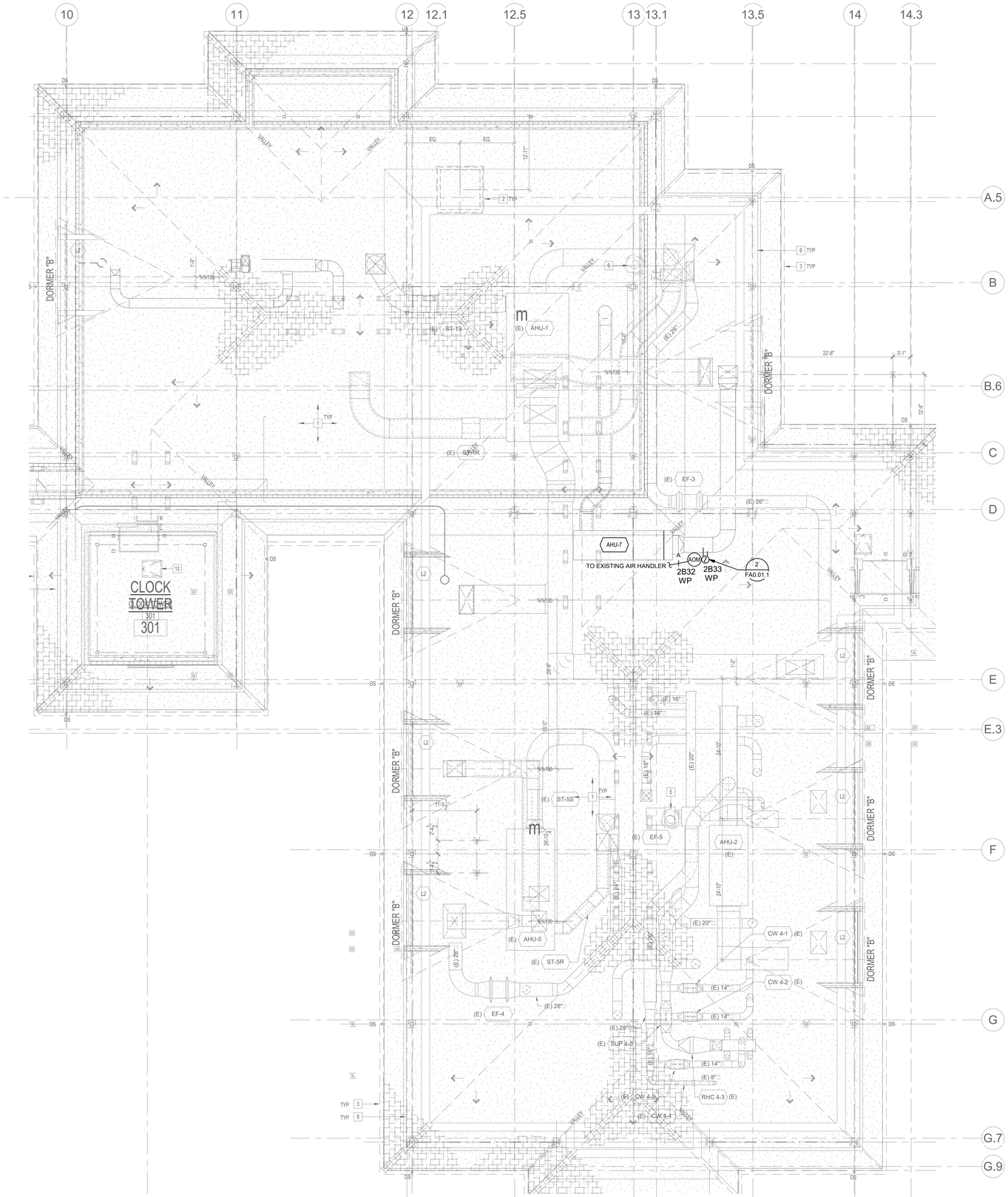

1 EXISTING - PENTHOUSE FLOOR PLAN - EAST - FIRE ALARM

1/8" = 1'-0"

9/29/2021 2:52:21 PM

NOLL & TAM ARCHITECTS

729 Heinz Avenue
Berkeley, CA 94710
tel 510.542.2200
fax 510.542.2201

ARCHITECTS SEAL

REGISTERED PROFESSIONAL ENGINEER
JASON LAU
No. E16806
ELECTRICAL
STATE OF CALIFORNIA

APPROVALS

FILE NUMBER: 07-C1

DIVISION OF THE STATE ARCHITECT
APP# 01-117630
ACS_____ FLS_____ SSS_____
Date:

PROJECT 2016-0538
CONTACT Joe Ripp

INTERFACE ENGINEERING
135 Main Street
Suite 400
San Francisco, CA 94105
TEL 415.489.7240
FAX 415.489.7289
www.interfaceengineering.com

PROJECT TITLE

CONTRA COSTA CCD
D-4002
DVC SAN RAMON CAMPUS EXPANSION & RENOVATION

1690 Watermill Rd.
San Ramon, CA 94582

ISSUE TITLE

INCREMENT 1

ISSUE DATE	11/30/2018
NOLL & TAM JOB NUMBER	21630

REVISIONS

NO.	DATE	DESCRIPTION

SHEET TITLE

EXISTING - PENTHOUSE FLOOR PLAN - EAST - FIRE ALARM

SHEET NUMBER

FA2.38.1

EXISTING MAIN MXL PANEL

Summary

Requirement for standby current:	24 Hours	Design Supervison Current =	23.47 Amp-Hr
Requirement for alarm current:	5 Minutes	Design Alarm Current =	0.28 Amp-Hr
Spare Battery Capacity:	20 %	Additional Capacity Current =	4.75 Amp-Hr
Initiating Devices Assumed In Alarm:	10 %	**Battery AH requirement =**	28.51 Amp-Hr
		Battery Size	36.00 Amp-Hr

Supervisory Current

Module Part Number & Description		Quantity	Module Current	EOL Current	Device Current	Total Standby 24 VDC Module Current		
	Main Control Panel	1	175mA			0.175	Amps	
MMB-1/2/3	NAC Circuits			12mA per NAC		0.000	Amps	
	IAC Devices				1.1mA per device	0.000	Amps	
PSR-1	Remote Power Supply	4	70mA	0	0	0.280	Amps	
MKB-2	Main Keyboard	1	5mA	0	0	0.005	Amps	
RCC-1/1F	Remote Command Center	2	75mA	0	0	0.150	Amps	
CSM-4	Controllable Signal Module	1	10mA	0	0	0.010	Amps	
		2		12mA		0.024	Amps	
ALD-2I	Analog Loop Driver		105mA	0		0.000	Amps	
	IAC Devices	240			1.1 mA per Device	0.264	Amps	(15) NEW DEVICES
NIM-1W	Network Interface Module	1	70mA	0	NA	0.070	Amps	
					Total Supervisory Current	**0.978**	**Amps**	

Alarm Current

Module Part Number & Description		Quantity	24 VDC Current		5 VDC Current	
			Active / Module	Total	Active / Module	Total
MMB-1/2/3	Main Control Panel	1	0.175		500mA Provided	
PSR-1	Remote Power Supply	4	70mA		800mA Provided	
MKB-2	Main Keyboard	1	0	0.000 Amps	15mA	0.015 Amps
RCC-1/1F	Remote Command Center	2	75mA	0.150 Amps	0	0.000 Amps
CSM-4	Controllable Signal Module	1	34mA + 1.5A / circuit	3.034 Amps	30mA	0.030 Amps
NIM-1W	Network Interface Module	1	0	0.000 Amps	160mA	0.160 Amps
24 VDC Power Supply Needed		**MPS-6**	**24VDC Total**	**3.184 Amps**	**5VDC Total**	**0.205 Amps**
				24 VDC & 5 VDC Total Panel Alarm Current		**3.389 Amps**

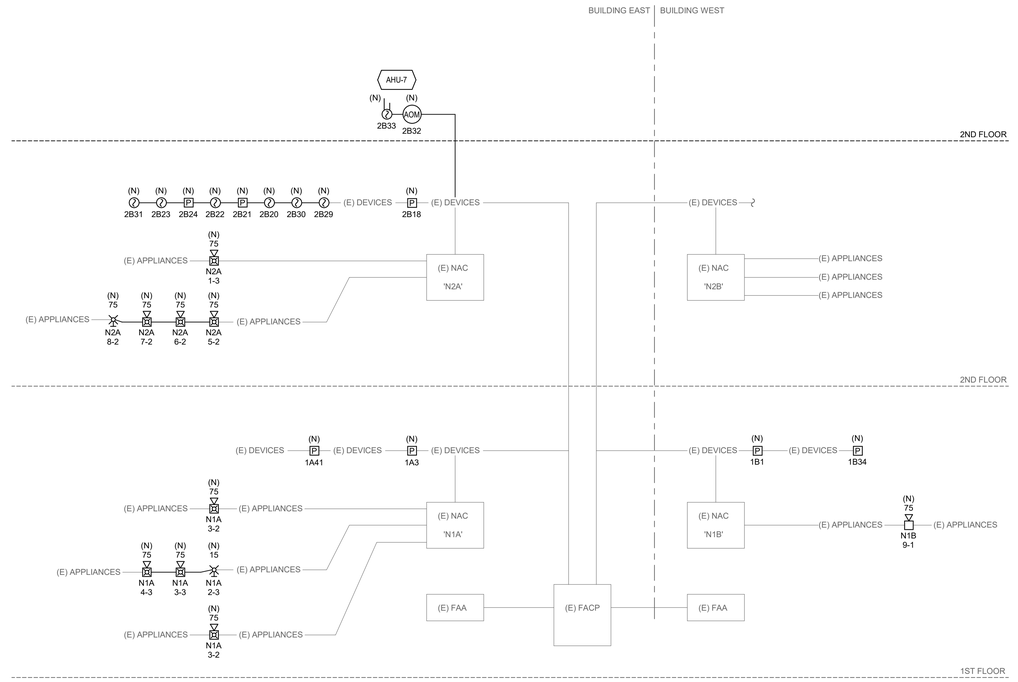

1 ONE-LINE DIAGRAM - FIRE ALARM

NO SCALE

EXISTING POWER SUPPLY - N1A

DEVICE	QUANTITY	STANDBY CURRENT (A)	ALARM CURRENT (A)
CONTROL BOARD	1	0.092	0.240
NOTIFICATION APPLIANCES			
NA1	10		1.324
NA2	6		0.86
NA3	8		0.691
NA4	8		0.917
TOTAL AMPERAGE		0.092	4.032
STANDBY HOURS (h)		24	
STANDBY AMP HOURS (Ah)		2.208	
ALARM OPERATION (h)			0.0833
ALARM AMP HOURS (Ah)			0.336
TOTAL AMP HOURS (Ah)			2.544
BATTERY DERATING FACTOR			1.100
BATTERY AMP HOUR RATING (min. Ah)			2.798
EXISTING BATTERY PROVIDED (Ah)			7.000

(E) NOTIFICATION CIRCUIT - N1A - CKT# 2
VOLTAGE DROP CALCULATIONS

BASED ON POINT-TO-POINT OHM'S CALCULATIONS. ACCEPTABLE LIMIT: 10% x 20.4V = 2.04 (MAX)

OHMS = (#14 FEET* 3.07/1000 +#12 FEET* 1.93/1000 + #10 FEET* 1.21/1000) * 2

1) V/O 15cd		0.060	2) A/V 30cd		0.102	3) A/V 75cd		0.148	
4) (E) A/V 15cd		0.065	5) (E) A/V 75cd		0.134	6) (E) A/V WP 75cd		0.145	
7) (E) V/O 15cd		0.041	8) (E) V/O 75cd		0.116	9) (E) DSM1		0.038	

DEVICE TYPE #	DEVICE #	TO DEVICE #	LINEAR FEET BETWEEN DEVICES #14	#12	#10	RESISTANCE OF WIRES (OHMS)	LOAD ON RUN (AMPS)	VOLTAGE DROP (VOLTS)	ACCUM. VOLTAGE DROP (V)
5	6	5		18		0.069	0.134	0.009	0.009
6	5	4		42		0.162	0.279	0.045	0.055
5	4	3		**62**		0.239	0.413	0.099	0.153
3	**3**	2		**64**		0.247	0.561	0.139	0.292
8	2	1		18		0.069	0.677	0.047	0.339
6	1	0		138		0.533	0.822	0.438	0.777
9	0	NAC		2		0.008	0.860	0.007	0.784

Percent Loss 3.84%

(E) NOTIFICATION CIRCUIT - N1A - CKT# 3
VOLTAGE DROP CALCULATIONS

BASED ON POINT-TO-POINT OHM'S CALCULATIONS. ACCEPTABLE LIMIT: 10% x 20.4V = 2.04 (MAX)

OHMS = (#14 FEET* 3.07/1000 +#12 FEET* 1.93/1000 + #10 FEET* 1.21/1000) * 2

1) V/O 15cd		0.060	2) A/V 30cd		0.102	3) A/V 75cd		0.148	
4) (E) A/V 15cd		0.065	5) (E) A/V 75cd		0.134	6) (E) A/V WP 75cd		0.145	
7) (E) V/O 15cd		0.041	8) (E) V/O 75cd		0.116	9) (E) DSM1		0.038	

DEVICE TYPE #	DEVICE #	TO DEVICE #	LINEAR FEET BETWEEN DEVICES #14	#12	#10	RESISTANCE OF WIRES (OHMS)	LOAD ON RUN (AMPS)	VOLTAGE DROP (VOLTS)	ACCUM. VOLTAGE DROP (V)
6	7	6		44		0.170	0.145	0.025	0.025
7	6	5		28		0.108	0.186	0.020	0.045
7	5	4		**45**		0.174	0.227	0.039	0.084
2	**4**	3		**45**		0.174	0.329	0.057	0.141
3	**3**	2		**45**		0.174	0.477	0.083	0.224
1	**2**	1		**60**		0.232	0.537	0.124	0.349
8	1	0		28		0.108	0.653	0.071	0.419
9	0	NAC		2		0.008	0.691	0.005	0.424

Percent Loss 2.08%

(E) NOTIFICATION CIRCUIT - N1A - CKT# 4
VOLTAGE DROP CALCULATIONS

BASED ON POINT-TO-POINT OHM'S CALCULATIONS. ACCEPTABLE LIMIT: 10% x 20.4V = 2.04 (MAX)

OHMS = (#14 FEET* 3.07/1000 +#12 FEET* 1.93/1000 + #10 FEET* 1.21/1000) * 2

1) V/O 15cd		0.060	2) A/V 30cd		0.102	3) A/V 75cd		0.148	
4) (E) A/V 15cd		0.065	5) (E) A/V 75cd		0.134	6) (E) A/V WP 75cd		0.145	
7) (E) V/O 15cd		0.041	8) (E) V/O 75cd		0.116	9) (E) DSM1		0.038	

DEVICE TYPE #	DEVICE #	TO DEVICE #	LINEAR FEET BETWEEN DEVICES #14	#12	#10	RESISTANCE OF WIRES (OHMS)	LOAD ON RUN (AMPS)	VOLTAGE DROP (VOLTS)	ACCUM. VOLTAGE DROP (V)
5	8	7		**72**		0.278	0.134	0.037	0.037
5	7	6		**42**		0.162	0.268	0.043	0.081
5	6	5		68		0.262	0.402	0.106	0.186
5	5	4		12		0.046	0.536	0.025	0.211
8	4	3		31		0.120	0.652	0.078	0.289
7	3	2		13		0.050	0.693	0.035	0.324
6	2	1		14		0.054	0.838	0.045	0.369
7	1	0		158		0.610	0.879	0.536	0.905
9	0	NAC		2		0.008	0.917	0.007	0.912

Percent Loss 4.47%

EXISTING POWER SUPPLY - N1B

DEVICE	QUANTITY	STANDBY CURRENT (A)	ALARM CURRENT (A)
CONTROL BOARD	1	0.092	0.240
NOTIFICATION APPLIANCES			
NA1	10		1.155
NA2	8		0.860
NA3	8		0.691
TOTAL AMPERAGE		0.092	2.946
STANDBY HOURS (h)		24	
STANDBY AMP HOURS (Ah)		2.208	
ALARM OPERATION (h)			0.0833
ALARM AMP HOURS (Ah)			0.245
TOTAL AMP HOURS (Ah)			2.453
BATTERY DERATING FACTOR			1.100
BATTERY AMP HOUR RATING (min. Ah)			2.699
EXISTING BATTERY PROVIDED (Ah)			7.000

(E) NOTIFICATION CIRCUIT - N1B - CKT# 1
VOLTAGE DROP CALCULATIONS

BASED ON POINT-TO-POINT OHM'S CALCULATIONS. ACCEPTABLE LIMIT: 10% x 20.4V = 2.04 (MAX)

OHMS = (#14 FEET* 3.07/1000 +#12 FEET* 1.93/1000 + #10 FEET* 1.21/1000) * 2

1) V/O 15cd		0.060	2) A/V 30cd		0.102	3) A/V 75cd		0.148	
4) (E) A/V 15cd		0.065	5) (E) A/V 75cd		0.134	6) (E) A/V WP 75cd		0.145	
7) (E) V/O 15cd		0.041	8) (E) V/O 75cd		0.116	9) (E) DSM1		0.038	

DEVICE TYPE #	DEVICE #	TO DEVICE #	LINEAR FEET BETWEEN DEVICES #14	#12	#10	RESISTANCE OF WIRES (OHMS)	LOAD ON RUN (AMPS)	VOLTAGE DROP (VOLTS)	ACCUM. VOLTAGE DROP (V)
8	10	9		16		0.062	0.116	0.007	0.007
6	9	8		68		0.262	0.261	0.069	0.076
8	8	7		65		0.251	0.377	0.095	0.170
5	7	6		62		0.239	0.511	0.122	0.293
8	6	5		12		0.046	0.627	0.029	0.322
5	5	4		32		0.124	0.761	0.094	0.416
8	4	3		14		0.054	0.877	0.047	0.463
4	3	2		48		0.185	0.942	0.175	0.638
5	2	1		22		0.085	1.076	0.091	0.729
7	1	0		18		0.069	1.117	0.078	0.807
9	0	NAC		2		0.008	1.155	0.009	0.815

Percent Loss 4.00%

EXISTING POWER SUPPLY - N2A

DEVICE	QUANTITY	STANDBY CURRENT (A)	ALARM CURRENT (A)
CONTROL BOARD	1	0.092	0.240
NOTIFICATION APPLIANCES			
NA1	10		1.307
NA2	8		1.412
NA3	9		0.931
TOTAL AMPERAGE		0.092	3.89
STANDBY HOURS (h)		24	
STANDBY AMP HOURS (Ah)		2.208	
ALARM OPERATION (h)			0.0833
ALARM AMP HOURS (Ah)			0.324
TOTAL AMP HOURS (Ah)			2.532
BATTERY DERATING FACTOR			1.100
BATTERY AMP HOUR RATING (min. Ah)			2.785
EXISTING BATTERY PROVIDED (Ah)			7.000

(E) NOTIFICATION CIRCUIT - N2A - CKT# 2
VOLTAGE DROP CALCULATIONS

BASED ON POINT-TO-POINT OHM'S CALCULATIONS. ACCEPTABLE LIMIT: 10% x 20.4V = 2.04 (MAX)

OHMS = (#14 FEET* 3.07/1000 +#12 FEET* 1.93/1000 + #10 FEET* 1.21/1000) * 2

1) V/O 75cd		0.165	2) A/V 30cd		0.102	3) A/V 75cd		0.148	
4) (E) A/V 15cd		0.065	5) (E) A/V 75cd		0.134	6) (E) A/V WP 75cd		0.145	
7) (E) V/O 15cd		0.041	8) (E) V/O 75cd		0.116	9) (E) DSM1		0.038	

DEVICE TYPE #	DEVICE #	TO DEVICE #	LINEAR FEET BETWEEN DEVICES #14	#12	#10	RESISTANCE OF WIRES (OHMS)	LOAD ON RUN (AMPS)	VOLTAGE DROP (VOLTS)	ACCUM. VOLTAGE DROP (V)
8	9	8		35		0.135	0.116	0.016	0.016
5	8	7		**30**		0.116	0.250	0.029	0.045
1	7	6		**35**		0.135	0.415	0.056	0.101
5	6	5		**80**		0.309	0.549	0.170	0.270
3	5	4		**50**		0.193	0.697	0.135	0.405
3	4	3		**40**		0.154	0.845	0.130	0.535
6	3	2		72		0.278	0.990	0.275	0.810
5	2	1		24		0.093	1.124	0.104	0.914
8	1	0		40		0.154	1.240	0.191	1.106
5	0	NAC		83		0.320	1.374	0.440	1.546
9	11	12		2		0.008	1.412	0.011	1.557

Percent Loss 7.63%

(E) NOTIFICATION CIRCUIT - N2A - CKT# 3
VOLTAGE DROP CALCULATIONS

BASED ON POINT-TO-POINT OHM'S CALCULATIONS. ACCEPTABLE LIMIT: 10% x 20.4V = 2.04 (MAX)

OHMS = (#14 FEET* 3.07/1000 +#12 FEET* 1.93/1000 + #10 FEET* 1.21/1000) * 2

1) V/O 15cd		0.060	2) A/V 30cd		0.102	3) A/V 75cd		0.148	
4) (E) A/V 15cd		0.065	5) (E) A/V 75cd		0.134	6) (E) A/V WP 75cd		0.145	
7) (E) V/O 15cd		0.041	8) (E) V/O 75cd		0.116	9) (E) DSM1		0.038	

DEVICE TYPE #	DEVICE #	TO DEVICE #	LINEAR FEET BETWEEN DEVICES #14	#12	#10	RESISTANCE OF WIRES (OHMS)	LOAD ON RUN (AMPS)	VOLTAGE DROP (VOLTS)	ACCUM. VOLTAGE DROP (V)
4	1	2		50		0.193	0.065	0.013	0.013
7	2	3		36		0.139	0.106	0.015	0.027
6	3	4		62		0.239	0.251	0.060	0.087
7	4	5		14		0.054	0.292	0.016	0.103
4	5	6		22		0.085	0.357	0.030	0.133
5	6	7		65		0.251	0.491	0.123	0.257
5	7	8		36		0.139	0.625	0.087	0.343
5	8	9		**16**		0.062	0.759	0.047	0.390
5	9	10		**190**		0.733	0.893	0.655	1.045
9	10	NAC		2		0.008	0.931	0.007	1.052

Percent Loss 5.16%

(E) NOTIFICATION CIRCUIT - N2A - CKT# 3
VOLTAGE DROP CALCULATIONS

BASED ON POINT-TO-POINT OHM'S CALCULATIONS. ACCEPTABLE LIMIT: 10% x 20.4V = 2.04 (MAX)

OHMS = (#14 FEET* 3.07/1000 +#12 FEET* 1.93/1000 + #10 FEET* 1.21/1000) * 2

1) V/O 15cd		0.060	2) A/V 30cd		0.102	3) A/V 75cd		0.148	
4) (E) A/V 15cd		0.065	5) (E) A/V 75cd		0.134	6) (E) A/V WP 75cd		0.145	
7) (E) V/O 15cd		0.041	8) (E) V/O 75cd		0.116	9) (E) DSM1		0.038	

DEVICE TYPE #	DEVICE #	TO DEVICE #	LINEAR FEET BETWEEN DEVICES #14	#12	#10	RESISTANCE OF WIRES (OHMS)	LOAD ON RUN (AMPS)	VOLTAGE DROP (VOLTS)	ACCUM. VOLTAGE DROP (V)
4	1	2		50		0.193	0.065	0.013	0.013
7	2	3		36		0.139	0.106	0.015	0.027
6	3	4		62		0.239	0.251	0.060	0.087
7	4	5		14		0.054	0.292	0.016	0.103
4	5	6		22		0.085	0.357	0.030	0.133
5	6	7		65		0.251	0.491	0.123	0.257
5	7	8		36		0.139	0.625	0.087	0.343
5	8	9		**16**		0.062	0.759	0.047	0.390
5	9	10		**190**		0.733	0.893	0.655	1.045
9	10	NAC		2		0.008	0.931	0.007	1.052

Percent Loss 5.16%

NOLL & TAM ARCHITECTS

729 Heinz Avenue
Berkeley, CA 94710
tel 510.542.2200
fax 510.542.2201

ARCHITECTS SEAL

REGISTERED PROFESSIONAL ENGINEER JASON LAU No. E16806 ELECTRICAL STATE OF CALIFORNIA

APPROVALS

FILE NUMBER: 07-C1

DIVISION OF THE STATE ARCHITECT
APP# 01-117630
ACS_____ FLS_____ SSS_____
Date:

PROJECT 2016-0538
CONTACT Joe Ripp

INTERFACE ENGINEERING
135 Main Street
Suite 400
San Francisco, CA 94105
TEL 415.489.7240
FAX 415.489.7289
www.interfaceengineering.com

PROJECT TITLE

CONTRA COSTA CCD
D-4002
DVC SAN RAMON CAMPUS EXPANSION & RENOVATION

1690 Watermill Rd.
San Ramon, CA 94582

ISSUE TITLE
INCREMENT 1

ISSUE DATE 11/30/2018

NOLL & TAM JOB NUMBER 21630

REVISIONS

NO.	DATE	DESCRIPTION

SHEET TITLE
DETAILS - FIRE ALARM

SHEET NUMBER
FA5.01.1

9/29/2021 2:52:22 PM