PROJECT RECORD DRAWINGS
6/16/2011
CONTRACTOR: JOHNSTONE MOYER INC.

CONTRA COSTA COLLEGE APPLIED ARTS REMODEL

RFI | RFI CCO | ASI | PCO | CO

2600 MISSION BELL DRIVE

SAN PABLO, CA. 94806

SCOPE OF WORK

WORK SHALL BE COMPLETED IN MULTIPLE PHASES CONSISTING OF:

1. PARTIAL REMODEL OF 1ST AND 2ND OF THE APPLIED ARTS BUILDING INCLUDING ADA RESTROOM IMPROVEMENTS, INSTALLATION OF SMART CLASSROOM INFRASTRUCTURE, ASSOCIATED MECHANICAL AND ELECTRICAL WORK.
2. CONTRACTOR SHALL MOVE AND STORE ALL EXISTING FURNITURE TO THE HUMANITIES BUILDING. CONTRACTOR SHALL MOVE BACK EXISTING STORED FURNITURE AFTER COMPLETION OF WORK.
3. NO SITE WORK.
4. FIRE WATCH IS REQUIRED WHEN FIRE ALARM SYSTEM UPGRADE WORK IS BEING PERFORMED PER CFC SECTION 901,7 THROUGH 901.9.
5. HAZMAT REMOVAL

DRAWING INDEX

T0.1 TITLE SHEET

ARCHITECTURAL:

A1.0	(E) CAMPUS MAP/ACCESSIBLE PATH OF TRAVEL
A1.01	FIRST FLOOR CONSTRUCTION PHASING PLAN
A1.02	SECOND FLOOR CONSTRUCTION PHASING PLAN
A1.1	FIRST FLOOR PLAN – DEMO
A1.2	SECOND FLOOR PLAN – DEMO
A1.3	FIRST FLOOR REFLECTED CEILING PLAN – DEMO
A1.4	SECOND FLOOR REFELECTED CEILING PLAN – DEMO
A2.1	FIRST FLOOR PLAN
A2.2	SECOND FLOOR PLAN
A2.3	FIRST FLOOR REFLECTED CEILING PLAN
A2.4	SECOND FLOOR REFLECTED CEILING PLAN
A2.5	PARTIAL ENLARGED PLANS
A2.6	FIRST FLOOR EQUIPMENT PLAN
A2.7	SECOND FLOOR EQUIPMENT PLAN
A2.7.1	SMART CLASSROOM EQUIPMENT SCHEDULE
A2.8	FIRST FLOOR (EXISTING) FURNITURE RELOCATION PLAN
A2.9	SECOND FLOOR (EXISTING) FURNITURE RELOCATION PLAN
A4.1	INTERIOR FINISH SCHEDULE
A4.2	DOOR HARDWARE AND WINDOW SCHEDULES
A5.1	INTERIOR ELEVATIONS
A5.2	INTERIOR ELEVATIONS
A5.3	INTERIOR ELEVATIONS
A6.1	CEILING DETAILS
A9.1	INTERIOR DETAILS
A9.2	INTERIOR DETAILS
A9.3	INTERIOR DETAILS
A9.4	SIGNAGE

MECHANICAL:

M0.1	LEGEND, ABBREVIATIONS, GENERAL NOTES MECHANICAL
M0.2	MECHANICAL SCHEDULES
M1.1	FIRST FLOOR DEMO MECHANICAL PLAN
M1.2	SECOND FLOOR DEMO MECHANICAL PLAN
M2.1	FIRST FLOOR MECHANICAL PLAN
M2.2	SECOND FLOOR MECHANICAL PLAN
M6.1	MECHANICAL DETAILS
P0.1	LEGEND, ABBREVIATIONS, GENERAL NOTES PLUMBING
P0.2	PLUMBING SCHEDULES
P1.1	FIRST FLOOR DEMO PLUMBING PLAN
P1.2	SECOND FLOOR DEMO PLUMBING PLAN
P2.1	FIRST FLOOR PLUMBING PLAN
P2.2	SECOND FLOOR PLUMBING PLAN

ELECTRICAL:

E0.1	ELECTRICAL SYMBOL LISTS, NOTES AND FIXTURE SCHED.
E0.2	ELECTRICAL DETAILS
E0.3	ELECTRICAL PANEL SCHEDULE AND SINGLE LINE DIAGRAMS
E1.1	ELECTRICAL FIRST FLOOR DEMO PLAN
E1.2	ELECTRICAL SECOND FLOOR DEMO PLAN
E2.1	ELECTRICAL FIRST FLOOR LIGHTING PLAN
E2.2	ELECTRICAL SECOND FLOOR LIGHTING PLAN
E3.1	ELECTRICAL FIRST FLOOR POWER AND SIGNAL PLAN
E3.2	ELECTRICAL SECOND FLOOR POWER AND SIGNAL PLAN
E4.1	ELECTRICAL FIRST FLOOR FIRE ALARM PLAN
E4.2	ELECTRICAL SECOND FLOOR FIRE ALARM PLAN
E4.3	ELECTRICAL FIRE ALARM NOTES CALCS AND DETAILS
E4.4	FIRE ALARM RISER DIAGRAMS & CALCS

ABBREVIATIONS

AB	ANCHOR BOLTS
ACOUS	ACOUSTICAL
ACOUS PNL	ACOUSTICAL PANEL
ADDL	ADDITIONAL
ADMIN	ADMINISTRATIVE
AFF	ABOVE FINISH FLOOR
ALUM	ALUMINUM
ALT	ALTERNATE
APPROX	APPROXIMATE
ARCH	ARCHITECT(URAL)
BETW	BETWEEN
BLDG	BUILDING
BLK	BLOCK
BLKG	BLOCKING
BM	BEAM
BN	BOUNDARY NAIL
BOT	BOTTOM
BUR	BUILT-UP ROOF
CAB	CABINET
CAC	CALIFORNIA ADMIN-ISTRATIVE CODE
CEM	CEMENT
CEM PLAS	CEMENT PLASTER
CER	CERAMIC
CER TILE	CERAMIC TILE
CJ	CONSTRUCTION JOINT
CL	CENTER LINE
CLG	CEILING
CLR	CLEAR
CMU	CONCRETE MASONRY UNIT
COL	COLUMN
CONC	CONCRETE
CONN	CONNECTION
CONT	CONTINUOUS
CONTR	CONTRACTOR
CSPE	CHLOROSULFONATED POLYETHYLENE ("HYPALON")
DBL	DOUBLE
DEMO	DEMOLITION
DET	DETAIL
DF	DOUGLAS FIR
DIA	DIAMETER
DIAG	DIAGONAL
DIM	DIMENSION
DIST	DISTANCE
DN	DOWN
DS	DOWNSPOUT
DSA	DIVISION OF THE STATE ARCHITECT
DWG(S)	DRAWING(S)
EA	EACH
EF	EACH FACE
EJ	EXPANSION JOINT
ELEC	ELECTRICAL
ELEV	ELEVATION
EN	EDGE NAIL
EQ	EQUAL
EQUIP	EQUIPMENT
ES	EACH SIDE
EW	EACH WAY
EXIST	EXISTING
EXP	EXPANSION
EXT	EXTERIOR
FDN	FOUNDATION
FEC	FIRE EXTINGUISHER CABINET
FFM	FLEXIBLE FLASHING MATERIAL. SEE SPECIFICATIONS SECTION 06100
FIN	FINISH
FIN FL	FINISH FLOOR
FJ	FLOOR JOIST
FL	FLOOR
FLUOR	FLUORESCENT
FN	FIELD NAIL
FOC	FACE OF CONCRETE
FOF	FACE OF FINISH
FOM	FACE OF MASONRY
FOS	FACE OF STUD
FRMG	FRAMING
FT	FOOT/FEET
FTG	FOOTING
GA	GAGE OR GAUGE
GAL	GALLON
GALV	GALVANIZED
GLU LAM	GLUE LAMINATED
GR	GRADE
GSM	GALVANIZED SHEET METAL
GSS	GALVANIZED SHEET STEEL
GYP BD	GYPSUM BOARD
HD	HOLD-DOWN
HDR	HEADER
HM	HOLLOW METAL
HMA	HAZARDOUS MATERIALS ABATEMENT
HORIZ	HORIZONTAL
HSB	HIGH STRENGTH BOLTS
HT	HEIGHT
ID	INSIDE DIAMETER
IN	INCH(ES)
INSUL	INSULATION
INT	INTERIOR
JST	JOIST
JT	JOINT
L	LONG(LENGTH)
LT	LIGHT
LT WT	LIGHT WEIGHT
MAX	MAXIMUM
MB	MACHINE BOLTS
MECH	MECHANICAL
MET	METAL
MEZZ	MEZZANINE
MFR	MANUFACTURER
MIN	MINIMUM
MISC	MISCELLANEOUS
N/A	NOT APPLICABLE
NIC	NOT IN CONTRACT
NOM	NOMINAL
NTS	NOT TO SCALE
OC	ON CENTER
OH	OPPOSITE HAND
OLA	OFFICE OF LOCAL ASSISTANCE
OPP	OPPOSITE
OPNG	OPENING
PBS	PUBLIC BUILDINGS SERVICE
PERIM	PERIMETER
PERP	PERPENDICULAR
PL	PLATE OR PROPERTY LINE
PLAM	PLASTIC LAMINATE
PLAS	PLASTER
PLYWD	PLYWOOD
PN	PLATE NAIL
PSF	POUNDS PER SQUARE FOOT
PSI	POUNDS PER SQUARE INCH
PT	PRESSURE TREATED OR POINT
R	RISER
RAD	RADIUS
RDWD	REDWOOD
REINF	REINFORCEMENT
REQD	REQUIRED
RESIL	RESILIENT
RO	ROUGH OPENING
RS	ROUGH SAWN
RWL	RAIN WATER LEADER
SAF(1)	SELF-ADHERED FLASHING. SEE SPECIFICATIONS SECTION 06100
SAF(2)	SELF-ADHERED FLASHING. SEE SPECIFICATIONS SECTION 06100
SHT	SHEET
SH	SINGLE HUNG
SIM	SIMILAR
SOG	SLAB ON GRADE
SPEC(S)	SPECIFICATION(S)
SQ	SQUARE
SS	STAINLESS STEEL
SSP	
STRUCT	STRUCTURAL
SYM	SYMMETRICAL
T	TREAD
T&B	TOP AND BOTTOM
T&G	TONGUE AND GROOVE
TC	TOP OF CURB
TEL	TELEPHONE
TERR	TERRAZZO
TOC	TOP OF CONCRETE
TOS	TOP OF STEEL
TOT	TOTAL
TRANSV	TRANSVERSE
TR	TREATED
TW	TOP OF WALL
TYP	TYPICAL
UON	UNLESS OTHERWISE NOTED
UTIL	UTILITY
VCT	VINYL COMPOSITION TILE
VERT	VERTICAL
VG	VERTICAL GRAIN
VT	VINYL TILE
W	WIDE OR WIDTH
W/	WITH
W/C	WATER CLOSET
W/O	WITHOUT
WASH	WASHER
WD	WOOD
WP	WORKING POINT
WPF	WEATHERPROOF
WRB	WEATHER RESISTIVE BARRIER, CBC 1402.1. SEE SPECIFICATION SECTION 06100

SYMBOLS

L	ANGLE
℄	CENTER LINE
ϕ	DIAMETER OR ROUND LINE
(E)	EXISTING
#	POUND OR NUMBER
ℙ	PLATE
(N)	NEW
WP, ⊕	WORK POINT
⊕	NOMINAL FLOOR LEVEL OR ELEVATION
◒—	MATCH LINE
1A / A3.1	SECTION SYMBOL – SECTION NUMBER / SHEET NUMBER
8G / A9.1	DETAIL SYMBOL – DETAIL NUMBER / SHEET NUMBER

DSA APPL. NUMBERS

BUILDING NO.	BUILDING NAME	DSA APPLICATION NO.	APPROVAL DATE
A	ART BUILDING	SAN 32474	11/26/64
AA	APPLIED ARTS & ADMIN BLDG	SAN 42256 59314 107870	03/27/79 03/94 3/26/06
AD	CONCESSION BLDG POOL EQUIP BLDG POOL SITE UTILITIES AND IMPROVEMENTS	SAN 32170	04/28/67
B	BIOLOGICAL SCIENCE BUILDING	SAN 19387	12/21/59
BH	BOILER HOUSE	SAN 19387	11/21/67
CD	CHILD DEVELOPMENT	01-103204	3/5/2001
G	GYMNASIUM	SAN 14781	11/21/67
H	HUMANITIES BLDG	SAN 11810 SAN 16328 SAN 30521	06/10/54 08/29/57 04/18/68
HS	HEALTH SCIENCE BUILDING	SAN 34875	03/14/72
L	LIBRARY	SAN 22125	04/04/62
LA	LIBERAL ARTS BLDG	SAN 26794	12/23/65
M	MUSIC BLDG	SAN 26794	12/11/62
ML	MEN'S LOCKER BLDG	SAN 14373 SAN 42089	05/08/56 03/27/79
P	PHYSICAL SCIENCE BUILDING	SAN 19387 SAN 36531	05/08/56 12/12/73
PA	PERFORMANCE ARTS CENTER	SAN 41183	08/28/78
PE	PHYSICAL EDUCATION BUILDING	SAN 29711	09/27/67
R	RECEIVING		
S	STUDENT ASSN BUILDING	SAN 17288 SAN 31682	06/02/58 05/25/65
SS	STUDENT SERVICES BUILDING	01-107795	05/02/05
V	VOCATIONAL ARTS BUILDING	SAN 15741 SAN 25993	06/21/65 05/25/65
WL	WOMEN'S LOCKER BUILDING	SAN 20760	02/19/61
–	ADA PATH OF TRAVEL	107870	03/26/06

VICINITY MAP

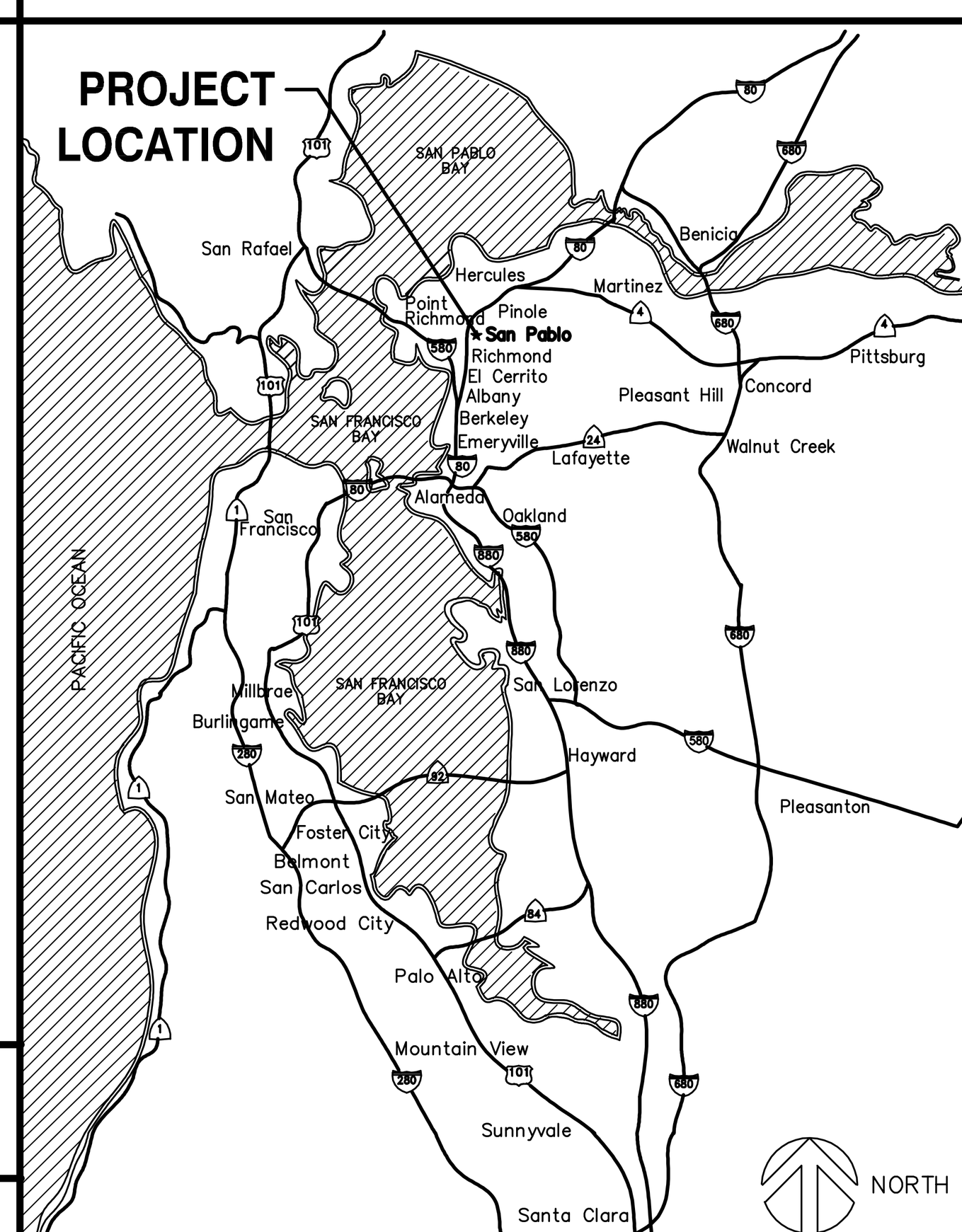

PROJECT DATA

OWNER'S ADDRESS:	TERESA GREENWELL CONTRA COSTA COMMUNITY COLLEGE DISTRICT 500 COURT STREET MARTINEZ, CA. 94553
PROJECT LOCATION:	CONTRA COSTA COLLEGE 2600 MISSION BELL DRIVE SAN PABLO, CA. 94806
SEISMIC DATA:	SEISMIC DESIGN CATEGORY D LATITUDE = 37.966 LONGITUDE = -122.333 Ss =1.600 S1 =0.600 SITE COEFFICIENTS SITE CLASS D Fa = 1.0 Fv = 1.5 SMS = 2.02 SM1 = 1.181 SDS = 1.344 SD1 = 0.788
STORY:	2 (EXISTING)
FIRST FLOOR AREA:	26,484 SF. (EXISTING)
SECOND FLOOR AREA:	28,797 SF. (EXISTING)
OCCUPANCY:	B (EXISTING)
CONSTRUCTION TYPE:	TYPE V-A (EXISTING)
AREA INCREASE:	[F/P-0.25] W/30 $[1-0.25]\ ^{20}/_{30} = 0.5$ 18,000 X 1.5 = 27,000 SF PER FLOOR

PROJECT TEAM

ARCHITECTURAL:

INTERACTIVE RESOURCES, INC.
117 PARK PLACE
POINT RICHMOND, CA 94801
TEL: (510) 236-7435
FAX: (510) 232-5325
EMAIL: george.namkung@intres.com
CONTACT: GEORGE Y. NAMKUNG, AIA

ELECTRICAL:

WHM
1605 SCHOOL STREET
MORAGA, CALIFORNIA 94556
TEL: (925) 376-2902
FAX: (925) 376-2904
EMAIL: jose@whminc.com
CONTACT: JOSE WE, PE

MECHANICAL:

S.J. ENGINEERS
300 FRANK H. OGAWA PLAZA, SUITE 308
OAKLAND, CALIFORNIA 94612
TEL: (510) 832-1505 X-23
FAX: (510) 832-1507
EMAIL: abrown@sjengineers.com
CONTACT: ALEX C. BROWN, PE.

LOCATION MAP

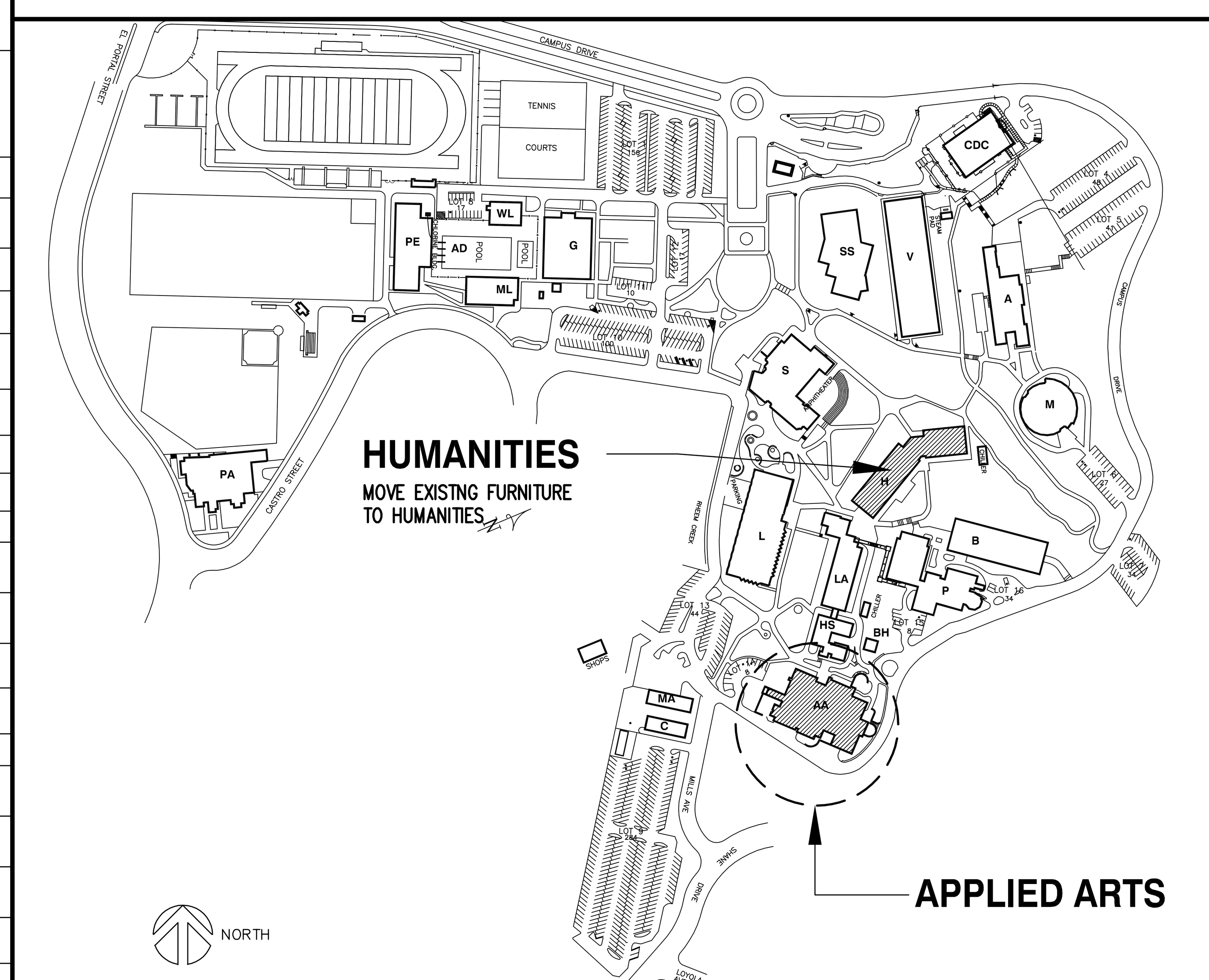

GENERAL NOTES

1. NEW CONSTRUCTION, IF SPECIFICALLY NOTED IN THE ARCHITECTURAL DRAWINGS, SHALL EITHER BE UNPREFIXED OR PREFIXED BY "NEW" OR (N) (NEW).
2. EXISTING CONSTRUCTION, IF SPECIFICALLY NOTED IN THE ARCHITECTURAL DRAWINGS, SHALL ALWAYS BE PREFIXED BY "EXIST" OR (E).
3. CONTRACTOR TO VERIFY ALL CONDITIONS AND DIMENSIONS AT SITE. ALL INCONSISTENCIES SHALL BE BROUGHT TO THE ATTENTION OF THE ARCHITECT BEFORE PROCEEDING WITH THE WORK.
4. INFORMATION ON EXISTING CONDITIONS WAS OBTAINED FROM ORIGINAL DRAWINGS PROVIDED BY THE OWNER AND FROM LIMITED EXPLORATORY OBSERVATIONS. ALTHOUGH THE ARCHITECT ASSUMES THESE SOURCES TO BE RELIABLE, AND ASSUMES OBSERVED CONDITIONS TO BE REPRESENTATIVE, ACTUAL CONDITIONS MAY VARY.

REFERENCE CODES

BUILDING CODE AND STANDARD:

TITLE 24 CALIFORNIA CODE OF REGULATIONS:

PART 1 – 2007 CALIFORNIA BUILDING STANDARDS ADMINISTRATIVE CODE
PART 2 – 2007 CALIFORNIA BUILDING CODE VOLUMES 1 AND 2
PART 3 – 2007 CALIFORNIA ELECTRICAL CODE
PART 4 – 2007 CALIFORNIA MECHANICAL CODE
PART 5 – 2007 CALFORNIA PLUMBING CODE
PART 6 – 2007 CALIFORNIA ENERGY CODE
PART 7 – 2007 CALIFORNIA ELEVATOR SAFETY CONSTRUCTION CODE
PART 8 – 2007 CALIFORNIA HISTORICAL BUILDING CODE
PART 9 – 2007 CALIFORNIA FIRE CODE
PART 10 – 2007 CALIFRONIA EXISTING BUILDING CODE
PART 11 – RESERVED
PART 12 – 2007 CALIJFORNIA REFERENCE STANDARDS CODE

2004 ADAAG (AMERICANS WITH DISABILITIES ACCESSIBILITY GUIDELINES

NFPA 13, AUTOMATIC SPRINKLER SYSTEM, 2002 EDITION (CA AMENDED)
NFPA 14, INSTALLATION OF STANDPIPE AND HOSE SYSTEMS, 2002 EDITION (CA AMENDED)
NFPA 20 STATIONARY FIRE PUMPS 2002 EDITION (CA AMENDED)

NFPA 24, PRIVATE FIRE MAINS, 2002 EDITION (CA AMENDED)
NFPA 25, INSPECTION, TESTING AND MAINTENANCE OF WATER BASED FIRE PROTECTION SYSTEMS, 2002 EDITION (CA AMENDED)

UL 38, MANUAL FOR OPERATING SIGNAL BOXES 2005 EDITION
UL 258, SKMOKE DETECTORS FOR FIRE PROTECTIVE SIGNALING SYSTEMS 1996 EDITION
UL 268A, SMOKE DETECTORS DUCTS APPLICATIONS 1996 EDITION

UL 464. AUDIBLE SIGNAL APPLIANCES 2003 EDITION
UL 521, HEAT DETECTORS FOR FIRE PRTOECTIVE SIGNALING SYSTEMS 1999 EDITION
UL 1424, CABLES FOR POWER LIMITED FIRE PROTECTIVE SIGNALING CIRCUITS 2005 EDITION
UL 1971, SIGNALING DEVICES FOR THE HEARING IMPAIRED 2002 EDITION

ADMINSTRATIVE REQUIREMENTS FROM PART 1, TITLE 24, C.C.R.

THE GENERAL INFORMATION SHALL BE INCLUDED IN THE SPECIFICATION AS GENERAL CONDITION OR SUPPLEMENTARY GENERAL CONDITION AND NO DRAWING AS GENEARL NOTES:

- ADDENDA AND CHANGES AS PER SECTION 4-338.
- INSPECTOR APPROVED BY DSA.
- INSPECTOR AND CONTINUOUS INSPECTION OF WORK PER SECTION 4-333(B) AND 4-342.
- TEST AND TESTING LAVATORY PER SECTION 4-335 (OWNER SHALL PAY THE TESTING LAVATORY).
- SPECIAL INSPECTION PER SECTION 4-333(C).
- CONTRACTOR SHALL SUBMIT VERIFIED REPORT PER SECTION 4-336 & 4-343(C).
- ADMINISTRATION OF CONSTRUCTION PER PART I, TITLE 24, C.C.R.,
  - * DUTIES OF ARCHITECT, STRUCTURAL ENGINEER, OR PROFFESSIONAL ENGINEER PER SECTION 4-333(A) AND 4-341.
  - * DUTIES OF CONTRACTOR PER SECTION 4-343.
  - * VERIFIED REPORTS PER SECTION 4-336.
- A COPY OF PART 1 AND 2 OF TITLE 24, SHALL BE KEPT AND AVAILABLE IN THE FIELD DURING CONSTRUCTION.
- DSA SHALL BE NOTIFIED ON START OF CONSTRUCTION PER SECTION 4-331.
- SUPERVISION BY DSA PER SECTION 4-334.

REVISION	DESCRIPTION	INITIAL	DATE
1	ADDENDUM NO. 1 145 AND 137		12.23.09
2	ADDENDUM NO. 2 145 AND 137		01.07.10
	ASI NO. 2 FIRST FLR MEN'S ROOM		05.07.10
3	ASI NO. 3 AV EQUIP. @ 137, 143, 145		05.20.10
4	RCP 04 MARKERBOARDS		05.20.10
5	RCP 10 ADD DOOR AT SQUAD RM.		09.28.10

ISSUED FOR PROGRESS REVIEW	
ISSUED FOR PLAN CHECK – DSA	07/01/09
ISSUED FOR PERMIT	
ISSUED FOR BID	11/18/09
ISSUED FOR CONSTRUCTION	

SEAL:

CONSULTANT:

INTERACTIVE RESOURCES
ARCHITECTURE • PLANNING • ENGINEERING
117 PARK PLACE
POINT RICHMOND
CALIFORNIA 94801
(510) 236-7435
(FAX) 232-5325
http//www.intres.com

PROJECT:

APPLIED ARTS REMODEL

CONTRA COSTA COLLEGE
2600 MISSION BELL DR.
SAN PABLO, CA.

CONTRA COSTA COMMUNITY COLLEGE DISTRICT

SHEET TITLE:

TITLE SHEET

PROJ. NO.	2008-090.01
PREPARATION AND REVIEW	
DRAWN BY	MT
DESIGNER	GYN
PROJ. MGR.	GYN
PEER REVIEW	

SHEET NUMBER:

T0.1

NUMBER: OF:

C:\Users\Mike Mahoney\Desktop\Contra Costa Fine Arts Remodel – CAD Work 5-11\CAD files\T0.1 TITLE SHEET.dwg 6/17/2011 9:24 AM Mike Mahoney

Contra Costa College Applied Arts Building Remodel

Project # 2009-059
Tel: (650) 537-9744

PCO's

Number	Description	Status	Page #
001	Owner Initiated Removal of Glue Lam Beam in Room 137	Pending	A1.1
002	Owner Initiated Cost for Removal of Casework in Room 137	Pending	A1.1
003	Owner Initiated Removal of Room 133 Carpet Demo	Pending	A1.1
004	1st Floor Men's Bathroom Emercency Damage Repair	Pending	E1.2
005	Weekend Repair of Damaged Cable Seving Panel 3P1	Pending	E3.1
006	The Additional Costs for Added Flooring	Pending	A2.1
007	Added Cost for Increasing the Amount of Visual Display Surfaces	Pending	A2.1
008	Additional Cost to Remove Lockers per RCP #2	Pending	A2.1
009	RCP #1 ADA Locker	Pending	A2.2
009.002	RCP #1 ADA Locker	Pending	E3.1
010	Credit for Deletion of Outlet in Room 131		A2.1
010.001	Credit for Deletion of Outlet in Room 131		A2.1
011	Credit for Deleting Door #112		A2.1
011.001	Credit for Deleting Door #112		A2.1
012	Keying of Classrooms for Entire Project		A2.1, A2.2
012.001	Keying of Classrooms for Entire Project		A2.1, A2.2
013	Per RCP 5.1 the Cost to Cover the Holes		A2.1
013.001	Per RCP 5.1 the Cost to Cover the Holes		A2.1
014	RCP 6 For Infil Floor and Replace Floor in Room 135		A2.1
014.001	RCP 6 For Infil Floor and Replace Floor in Room 135		A2.1
015	RCP #7 New Computers		A2.1, A2.2
015.001	RCP #7 New Computers		A2.1, A2.2
016	RCP #8 Signage		A2.1, A2.2
016.001	RCP #8 Signage		A2.1, A2.2
017	Added Paint For Phase 1		A2.1
017.001	Added Paint For Phase 1		A2.1
018	Per Rfi #32 Additional FSD		M2.1
018.001	Per Rfi #32 Additional FSD		M2.1
019	Added Drywall in Ceilings in Rooms 112, 114		A2.1
019.001	Added Drywall in Ceilings in Rooms 112, 114		A2.1
019.002	Added Drywall in Ceilings in Rooms 112, 114		A2.1
020	Per RFI #58 Removal of Unforeseen VCT		A2.2
020.001	Per RFI #58 Removal of Unforeseen VCT		A2.2
020.002	Per RFI #58 Removal of Unforeseen VCT		A2.2
021	Credit For Chairs Remove ASI #4		A2.8
021.001	Credit For Chairs Remove ASI #4		A2.8
022	Locate Conduit in 1st Floor Bathrooms	Pending	E3.1
023	Extended Backing for Whiteboard in Room 137	Pending	A2.1
024	Mounting Brackets for Projector Screens		A2.1, A2.2
025	Replacement Panels for AV Racks		A2.1, A2.2
026	Added Whiteboards		A2.1, A2.2
027	Added Washing Machine in Culinary		A2.2
028	Floating Bookcases in Culinary		A2.2
029	Re-Frame 2 Door Openings		A2.1
030	Identify Electrical Wire in Fire Alarm Conduit		E3.1
031	VOID		
032	L-Shape Wall at First Floor Men's Bathroom		A2.1
033	Unforeseen Flooring Issues		A2.2
034	Unforeseen Plumbing Phase 2 Classrooms		P2.2
035	Unforeseen Change to Projector Mount Location		A2.1
036	Reconfigure Electrical in Room 143 and 145		E3.1
037	Re-Frame 2nd Floor Bathrooms		A2.2
038	2nd Floor Bathroom Plumbing Change		P2.2
039	2nd Floor Bathroom Electrical Change		E3.2
040	Pathway for Data from 113 to 139		E3.1, E3.2
041	Frame Columns to Support Posts in 2nd Floor Women's Room		A2.2
042	Added Drywall to Walls 2nd Floor Bathrooms		A2.2
043	Drywall Ceiling 2nd Floor Men's Room		A2.2
044	Added Signage		A2.1, A2.2
045	Provide Moving Services and Boxes		A2.8
046	Fix Exterior Windows		A2.1, A2.2
047	Add Lockable Hardware to Door 219 and 220		A4.2
049	Add Furniture to Room 252H and 252D		A2.8
051	Credit for Alarm Wiring		E4.1, E4.2
	Project Totals:		

PCO'S

CO #	PCO #	Page Number Reference
CO #1	PCO # 1 - Remove glue lam beam	A1.1
	PCO # 2 - Demo casework in room 137	A1.1
	PCO # 3 - Demo carpet in room 133	A1.1
	PCO # 4.1 - Emgcy repair work to damaged cable in 1st flr men's bthrm	E1.2
	PCO # 5.1 - Repair work for the panel 3P1	E3.1
CO #2	PCO # 6 - Added flooring	A2.1
	PCO # 7 - Added visual display surfaces	A2.1
	PCO # 8 - Demo lockers	A1.1
	PCO # 9.2 - RCP # 1 ADA locker	A2.2
	PCO # 10.1 - Credit for outlet on window wall	E3.1
	PCO # 11.1 - Credit for deleting door room 133A	A2.1
	PCO # 12.1 - Keying of classrooms	A2.1
	PCO # 13.1 - RCP #5 cover holes in room 131	A2.1
	PCO # 14.1 - RCP #6 infill floor room 135	A2.1
	PCO # 15.1 - RCP #7 added computers	A2.1, A2.2
	PCO # 16.1 - RCP #8 signage	A2.1, A2.2
	PCO # 17.1 - RCP #9 added paint for phase 1	A2.1
	PCO # 18.1 - RCP #8 added FSD phase 1	M2.1
CO #3	PCO # 19.2 - Drywall ceiling bathrooms	A2.1
	PCO # 20.2 - Demolition of flooring	A2.2
	PCO # 21.2 - Credit for chairs	A2.8
	PCO # 23 - Whiteboard attachment add	A2.1, A2.2
	PCO # 25 - Computer rack panels	A2.1, A2.2
	PCO # 26 - Added whiteboards	A2.1, A2.2
	PCO # 27 - Washing machine add	A2.2
	PCO # 28 - Added bookcases	A2.2
	PCO # 29 - Added room openinings in room 111	A2.1
	PCO # 30 - Identify electrical fire alarm issue	E3.1
	PCO # 32 - L- shape wall at mens room	A2.1
	PCO # 33 - Flooring changes phase 2	A2.2
CO #4	PCO # 22 - Identify conduits	E3.1
	PCO # 24 - Wall bracket for projector screens	A2.1
	PCO # 36 Re-route electrical in room 143 and 145	E3.1
	PCO # 37 Re-frame walls 2nd floor bathrooms	A2.2
	PCO # 38 2nd floor bathrooms plumbing change	P2.2
	PCO # 39 2nd floor bathrooms electrical change	E3.2
	PCO # 40 Power and signal plan changes for data room 139 to 113	E3.1, E3.2
	PCO # 41 Unforeseen 2 floor bathroom framing work	A2.2
	PCO # 42 Drywall changes 2nd floor bathrooms	A2.2
	PCO # 43 Added drywall ceiling in 2nd floor bathrooms	A2.2
	PCO # 44 Added signage	A2.1, A2.2
	PCO # 45 Added moving expenses	A2.8
	PCO # 46 Fix exterior windows	A2.1, A2.2
	PCO # 47 add lockable hardware to 2nd floor bathrooms	A4.2
	PCO # 49 Added furniture	A2.8
	PCO # 51 FSD wiring deduct	E4.1, E4.2
	PCO # 52 Controls training	M0.1
CO # 5	PCO # 34 Relocate plumbing room 210	P2.2
	PCO # 35 Relocate Audio visual projector	a2.1

CO'S

PCO'S

RFI'S

Contra Costa College Applied Arts Building Remodel

Project # 2009-059
Tel.: (650) 537-9744 Fax: (650) 570-6144

RFI #	Subject	Author / Company	Answer / Company	Date Created	Date Req'd	Date Resp	Cost Impact	Amt Page #	Sched Impact	Days	DWG Impact
001	Flooring in room 148 & 133	Johnstone Moyer, inc.	Interactive Resources Architecture Planning & Engineering	3/17/2010	3/24/2010		Yes	A1.1	-		Yes
002	Existing Casework in Room 137	Johnstone Moyer, inc.	Interactive Resources Architecture Planning & Engineering	3/17/2010	3/24/2010		-	A1.1	-		-
003	Flooring in Rcom 137	Johnstone Moyer, inc.	Interactive Resources Architecture Planning & Engineering	3/22/2010	3/29/2010		Yes	A2.1	No		-
004	Existing Casework in Unit 135	Johnstone Moyer, inc.	Interactive Resources Architecture Planning & Engineering	3/22/2010	3/29/2010		Yes	A1.1	No		No
005	Existing Glue Lam Beam in Room 137	Johnstone Moyer, inc.	Interactive Resources Architecture Planning & Engineering	3/22/2010	3/29/2010		Yes	A1.1	-		-
006	Existing Mechanical System in Room 137	Johnstone Moyer, inc.	Interactive Resources Architecture Planning & Engineering	3/22/2010	3/29/2010		Yes	M1.1	-		Yes
006.001	Existing Mechanical System in Room 137	Johnstone Moyer, inc.	Interactive Resources Architecture Planning & Engineering	3/22/2010	3/29/2010		Yes	M1.1	-		Yes
007	Junction Box for the Halon System	Johnstone Moyer, inc.	Interactive Resources Architecture Planning & Engineering	3/26/2010	4/2/2010		No	E4.1	Yes		No
008	61000 Fire Retardent-Treated Materials	Johnstone Moyer, inc.	Interactive Resources Architecture Planning & Engineering	3/29/2010	4/2/2010		No	A9.1	No		-
009	Full Height Walls	Johnstone Moyer, inc.	Interactive Resources Architecture Planning & Engineering	4/2/2010	4/2/2010		No		No		No
010	Room 137 HVAC Vent Conflict with Wall Framing	Johnstone Moyer, inc.	Interactive Resources Architecture Planning & Engineering	4/2/2010	4/9/2010		-	A2.1	-		-
011	Request for Authorization to Enter Phase 2 Bathrooms in Phase 1	Johnstone Moyer, inc.	Interactive Resources Architecture Planning & Engineering	4/2/2010	4/9/2010		No	N/A	No		-
012	Structural Post at Doorway in Room 137	Johnstone Moyer, inc.	Interactive Resources Architecture Planning & Engineering	4/6/2010	4/13/2010		-	A2.1	-		-
013	Room 112 Mens Bathroom Plumbing Wall	Johnstone Moyer, inc.	Interactive Resources Architecture Planning & Engineering	4/6/2010	4/13/2010		-	P2.1	-		-
014	Detail A 9.2 Clip	Johnstone Moyer, inc.	Interactive Resources Architecture Planning & Engineering	4/6/2010	4/13/2010		-	A9.2	-		-
015	Morter Bed ir 1st Floor Bathrooms (112 & 114)	Johnstone Moyer, inc.	Interactive Resources Architecture Planning & Engineering	4/7/2010	4/14/2010		-	A2.1			
016	High Voltage in Men's Room 112	Johnstone Moyer, inc.	Interactive Resources Architecture Planning & Engineering	4/9/2010	4/16/2010		-	E3.1	-		-
017	Room 112 - Existing Conduit Conflicts with Plumbing	Johnstone Moyer, inc.	Interactive Resources Architecture Planning & Engineering	4/9/2010	4/16/2010		-	E3.1	-		-
018	Underground Conduits In the Men's Bathroom	Johnstone Moyer, inc.	Interactive Resources Architecture Planning & Engineering	5/14/2010	5/11/2010		Yes	E3.1	No		Yes
019	New Framed Wall at the Corridor 148 and Room 133	Johnstone Moyer, inc.	Interactive Resources Architecture Planning & Engineering	5/7/2010	5/14/2010		Yes	A2.1	No		Yes
020	Star Media's Installation Requirements Submittal for AV	Johnstone Moyer, inc.	Interactive Resources Architecture Planning & Engineering	5/7/2010	5/14/2010		Yes	A2.7.1	No		No
021	Classroom 131 Outlets on Window Wall	Johnstone Moyer, inc.	Interactive Resources Architecture Planning & Engineering	5/7/2010	5/14/2010		-	E3.1	-		-
023	Blinds	Johnstone Moyer, inc.	Interactive Resources Architecture Planning & Engineering	5/14/2010	5/21/2010		-	A2.1	-		-
024	The Ceiling Tile in 1st Floor Bathrooms	Johnstone Moyer, inc.	Interactive Resources Architecture Planning & Engineering	5/19/2010	5/26/2010		-	A2.3	-		-
025	Corridor 148 Flooring	Johnstone Moyer, inc.	Interactive Resources Architecture Planning & Engineering	5/19/2010	5/26/2010		-	A2.1	-		-
025.001	Corridor 148 Flooring	Johnstone Moyer, inc.	Interactive Resources Architecture Planning & Engineering	5/19/2010	5/26/2010		-	A2.1	-		-
026	Electrical Submittal	Johnstone Moyer, inc.	Interactive Resources Architecture Planning & Engineering	5/19/2010	5/26/2010		-	N/A	-		-
027	Closet in Corridor 148 Next Room 133	Johnstone Moyer, inc.	Interactive Resources Architecture Planning & Engineering	5/20/2010	5/27/2010		-	A2.1	-		-
028	Changing the Mens Room Fixtures Back to Wall Hung	Johnstone Moyer, inc.	Interactive Resources Architecture Planning & Engineering	5/26/2010	6/2/2010		-	P2.1	-		-
029	Concrete Pourback 1st Floor Bathrooms	Johnstone Moyer, inc.	Interactive Resources Architecture Planning & Engineering	5/26/2010	6/2/2010		-	A2.1	-		-
030	Access Hatch for Installation of Fire Alarm in the	Johnstone Moyer, inc.	Interactive Resources Architecture Planning & Engineering	6/9/2010	6/16/2010		Yes	A2.1	No		-
031	Concrete Replacement at the 1st Floor Bathrooms	Johnstone Moyer, inc.	Interactive Resources Architecture Planning & Engineering	6/9/2010	6/16/2010		-	A2.1	-		-
032	Additional FSD Required in Room 137	Johnstone Moyer, inc.	Interactive Resources Architecture Planning & Engineering	6/9/2010	6/16/2010		-	M2.1	-		-
033	Fire Alarm Devices	Johnstone Moyer, inc.	Interactive Resources Architecture Planning & Engineering	6/11/2010	6/18/2010		-	E4.1	-		-
034	Fire Alarm Device on North Wall Room 203	Johnstone Moyer, inc.	Interactive Resources Architecture Planning & Engineering	6/11/2010	6/18/2010		-	E4.2	-		-
035	Smoke Detectors in 237H & 237G	Johnstone Moyer, inc.	Interactive Resources Architecture Planning & Engineering	6/11/2010	6/18/2010		-	E4.2	-		-
036	Fire Alarm: MXL-IQ and On Board ALD Card Loops	Johnstone Moyer, inc.	Interactive Resources Architecture Planning & Engineering	6/11/2010	6/18/2010		-	E4.1	-		-
037	Audio Visual Cabinet in Room #135	Johnstone Moyer, inc.	Interactive Resources Architecture Planning & Engineering	6/11/2010	6/18/2010		-	A2.1	-		-
038	Fire Rated Walls in Room 131 and 137	Johnstone Moyer, inc.	Interactive Resources Architecture Planning & Engineering	6/11/2010	6/18/2010		-	A2.1	-		-
039	Room 133 New Electrical Panel Wall	Johnstone Moyer, inc.	Interactive Resources Architecture Planning & Engineering	6/21/2010	6/28/2010		-	E3.1	-		-
040	Room 131 - Existing T-Bar	Johnstone Moyer, inc.	Interactive Resources Architecture Planning & Engineering	6/21/2010	6/28/2010		-	A2.3	-		-
041	3RU Security Shelf for Dell Optiplex.	Johnstone Moyer, inc.	Interactive Resources Architecture Planning & Engineering	6/24/2010	7/1/2010		-	A2.7.1	-		-
042	Load Bearing Wall at Room 131	Johnstone Moyer, inc.	Interactive Resources Architecture Planning & Engineering	6/24/2010	7/1/2010		-	A2.1	-		-
043	Room 131 South Wall Drywall Deficiency	Johnstone Moyer, inc.	Interactive Resources Architecture Planning & Engineering	6/28/2010	7/5/2010		-	A2.1	-		-
044	Double Door Outside Office 132	Johnstone Moyer, inc.	Interactive Resources Architecture Planning & Engineering	6/29/2010	7/6/2010		-	A2.1	-		-
045	RCP #2 Accessible Locker Pricing	Johnstone Moyer, inc.	Interactive Resources Architecture Planning & Engineering	6/29/2010	7/6/2010		-	A2.2	-		-
046	Fire Smoke Dampers in Existing Ductwork	Johnstone Moyer, inc.	Interactive Resources Architecture Planning & Engineering	6/30/2010	7/7/2010		-	E4.1, E4.2	-		-
047	Room #135 AV Rack	Johnstone Moyer, inc.	Interactive Resources Architecture Planning & Engineering	7/8/2010	7/15/2010		-	A2.1	-		-
048	Single Action Pull Station for Temporary Phase 1 Solution	Johnstone Moyer, inc.	Interactive Resources Architecture Planning & Engineering	7/14/2010	7/21/2010		-	E4.1	-		-
049	The Existing Resilient Base Conflicts with New Base	Johnstone Moyer, inc.	Interactive Resources Architecture Planning & Engineering	7/15/2010	7/22/2010		-	A2.1	-		-
050	Siemens System Upgrades by New Contractor	Johnstone Moyer, inc.	Interactive Resources Architecture Planning & Engineering	7/15/2010	7/22/2010		-	E4.1	-		-
051	Room 131 Cable Going into Raised Floor	Johnstone Moyer, inc.	Interactive Resources Architecture Planning & Engineering	7/16/2010	7/23/2010		-	A2.1	-		-
052	Dell Optiplex for Audio Visual Racks	Johnstone Moyer, inc.	Interactive Resources Architecture Planning & Engineering	7/29/2010	8/5/2010		-	A2.7.1	-		-
053	Walls in Hallway Outside Door #201	Johnstone Moyer, inc.	Interactive Resources Architecture Planning & Engineering	8/10/2010	8/17/2010		-	A2.2	-		-
054	Steel Columns in Office Room 113	Johnstone Moyer, inc.	Interactive Resources Architecture Planning & Engineering	8/10/2010	8/17/2010		-	A2.2	-		-
055	Framing of Wall and Ceiling Above Door #101	Johnstone Moyer, inc.	Interactive Resources Architecture Planning & Engineering	8/10/2010	8/17/2010		-	A2.1	-		-
056	Wall to be Removed in Office 111A	Johnstone Moyer, inc.	Interactive Resources Architecture Planning & Engineering	8/10/2010	8/17/2010		-	A2.1	-		-
057	Electrical Panels in Room 252	Johnstone Moyer, inc.	Interactive Resources Architecture Planning & Engineering	8/10/2010	8/17/2010		-	E3.2	-		-
058	Unforeseen Flooring in Room 252	Johnstone Moyer, inc.	Interactive Resources Architecture Planning & Engineering	8/10/2010	8/17/2010		-	A2.2	-		-

RFI'S

Contra Costa College Applied Arts Building Remodel

Project # 2009-059
Tel.: (650) 537-9744 Fax: (650) 570-6144

RFI #	Subject	Author / Company	Answer / Company	Date Created	Date Req'd	Date Resp	Cost Impact	Amt Page #	Sched Impact	Days	DWG Impact
059	Unforseen Plumbing in Phase 2	Johnstone Moyer, Inc.	Interactive Resources Architecture Planning & Engineering	8/12/2010	8/19/2010		-	P2.2	-		-
060	Drinking Fountains	Johnstone Moyer, Inc.	Interactive Resources Architecture Planning & Engineering	8/12/2010	8/19/2010		-	P2.2	-		-
061	Structural Post at Room 252	Johnstone Moyer, Inc.	Interactive Resources Architecture Planning & Engineering	8/12/2010	8/19/2010		-	A2.2	-		-
062	Paint Color of Ceiling in 1st Floor Bathrooms	Johnstone Moyer, Inc.	Interactive Resources Architecture Planning & Engineering	8/18/2010	8/25/2010		-	A4.1	-		-
063	Room 252 J Track in Ceiling	Johnstone Moyer, Inc.	Interactive Resources Architecture Planning & Engineering	8/23/2010	8/30/2010		-	A1.2	-		-
064	1st Floor Walls in Office 113A & 113B	Johnstone Moyer, Inc.	Interactive Resources Architecture Planning & Engineering	8/24/2010	8/31/2010		-	A2.1	-		-
065	Second Floor Layout	Johnstone Moyer, Inc.	Interactive Resources Architecture Planning & Engineering	8/24/2010	8/31/2010		-	A2.2	-		-
066	AHU 1an Start/Stop Control	Johnstone Moyer, Inc.	Interactive Resources Architecture Planning & Engineering	8/24/2010	8/31/2010		-	M.01	-		-
067	The Feflectec Ceiling in Room 252	Johnstone Moyer, Inc.	Interactive Resources Architecture Planning & Engineering	8/13/2010	8/20/2010		-	A2.4	-		-
068	Pull Station on Staircase #2	Johnstone Moyer, Inc.	Interactive Resources Architecture Planning & Engineering	9/13/2010	9/20/2010		-	E4.2	-		-
069	Wire Mold on Window Wall Room 206F, 206H	Johnstone Moyer, Inc.	Interactive Resources Architecture Planning & Engineering	9/13/2010	9/20/2010		-	E4.2	-		-
070	Fire Alarm Panel Location in Room #237D	Johnstone Moyer, Inc.	Interactive Resources Architecture Planning & Engineering	9/13/2010	9/20/2010		-	E4.2	-		-
071	Storage Room 138	Johnstone Moyer, Inc.	Interactive Resources Architecture Planning & Engineering	9/13/2010	9/20/2010		-	A2.1	-		-
072	Handicap Buttons in 1st Floor Bathrooms	Johnstone Moyer, Inc.	Interactive Resources Architecture Planning & Engineering	9/13/2010	9/20/2010		-	A2.1	-		-
073	Handicap Access for 2nd Floor for Bathrooms: 233, 235	Johnstone Moyer, Inc.	Interactive Resources Architecture Planning & Engineering	9/13/2010	9/20/2010		-	A2.2	-		-
074	Discrepancy in Architectural and Electrical Plans Room 214	Johnstone Moyer, Inc.	Interactive Resources Architecture Planning & Engineering	9/13/2010	9/20/2010		-	E3.2	-		-
075	1" Plywood Backing Behind AV Racks	Johnstone Moyer, Inc.	Interactive Resources Architecture Planning & Engineering	9/23/2010	9/30/2010		-	A9.1	-		-
076	Campus Initiated Changes to 111a and 113C	Johnstone Moyer, Inc.	Interactive Resources Architecture Planning & Engineering	9/23/2010	9/30/2010		-	A2.1	-		-
077	Existing Outlets in Room 143 and 145	Johnstone Moyer, Inc.	Interactive Resources Architecture Planning & Engineering	11/2/2010	11/9/2010		-	E3.1	-		-
078	Existing Outlets in Room 143 and 145	Johnstone Moyer, Inc.	Interactive Resources Architecture Planning & Engineering	11/2/2010	11/9/2010		-	E3.1	-		-
079	Projector Mount in Room 113	Johnstone Moyer, Inc.	Interactive Resources Architecture Planning & Engineering	11/4/2010	11/11/2010		-	A2.1	-		-
079.001	Projector Mount in Room 113	Johnstone Moyer, Inc.	Interactive Resources Architecture Planning & Engineering	11/19/2010	11/30/2010		-	A2.1	-		-
080	Upstairs Bathroom Urinal View	Johnstone Moyer, Inc.	Interactive Resources Architecture Planning & Engineering	11/8/2010	11/15/2010		-	A2.2	-		-
081	Air Handler Unit Controls	Johnstone Moyer, Inc.	Interactive Resources Architecture Planning & Engineering	12/2/2010	12/9/2010		-	M.01	-		-
082	Fiber Optic Cable Run for Phase 2	Johnstone Moyer, Inc.	Interactive Resources Architecture Planning & Engineering	12/7/2010	12/14/2010		-	E3.1, E3.2	-		-

Total Number of RFIs for this Project: 88 — Final Totals for this Project:

CCD'S

CCD (Construction Change Directive) LOG

CCD Number	Dated (Issued)	Description (Documents Issued)	Page #	Contractors COR #	Date to DSA
01	4.22.10	Temporary Power	E3.1, E3.2	5.2	Issued w/C.O. #1
01R	4.22.10	Temporary Power	E3.1, E3.2	5.2	Issued w/C.O. #1
02					
03					

ASI'S

ASI (Architect's Supplemental Instructions) LOG

CCD Number	Dated (Issued)	Description (Documents Issued)	Page #	Contractors COR #	Date to DSA
01	5.07.10	Tile Colors (Reference Submittal No. 4)	A4.1		N/A
02	5.07.10	Alternative Men's Room 112	P2.2		05.24.10
03	5.20.10	AV Equipment	A2.1, A2.2		05.24.10
04	6.23.10	Chair Selection	A2.9		N/A
05	10.19.10	Second Floor Ceiling	A2.1		
06	10.21.10	Ceiling Framing At Women's	A2.2		
07	10.29.10	Revised Room Numbers	A9.4		
08	11.03.10	Casework Finish	A5.1		
09	12.10.10	Second Floor Men's	A2.2		
10	12.15.10	Furniture Rooms 252H and 252D	A2.9		

Field Change Directive — Page #4

Modify AS1 #9 Layout — A2.5

Legend

RFI — RFI / CCO — ASI — PCO — CO

Conduit Run

Wire Run

Modifications

PROJECT RECORD DRAWINGS
6/16/2011
CONTRACTOR: JOHNSTONE MOYER INC.

REVISION	DESCRIPTION	INITIAL	DATE
1	ADDENDUM NO. 1 145 AND 137		12.23.09
2	ADDENDUM NO. 2 145 AND 137		01.07.10
3	ASI NO. 2 FIRST FLR MEN'S ROOM		05.07.10
4	ASI NO. 3 AV EQUIP. @ 137, 143, 145		05.20.10
5	RCP 04 MARKERBOARDS		05.20.10
	RCP 10 ADD DOOR AT SQUAD RM.		09.28.10

ISSUED FOR PROGRESS REVIEW	
ISSUED FOR PLAN CHECK – DSA	07/01/09
ISSUED FOR PERMIT	
ISSUED FOR BID	11/18/09
ISSUED FOR CONSTRUCTION	

SEAL:

CONSULTANT:

INTERACTIVE
RESOURCES
ARCHITECTURE • PLANNING • ENGINEERING
117 PARK PLACE
POINT RICHMOND
CALIFORNIA 94801
(510) 236–7435
(FAX) 232–5325
http://www.intres.com

PROJECT:

APPLIED ARTS REMODEL

CONTRA COSTA COLLEGE
2600 MISSION BELL DR.
SAN PABLO, CA.

CONTRA COSTA COMMUNITY COLLEGE DISTRICT

SHEET TITLE:

TITLE SHEET

PROJ. NO.	2008–090.01
PREPARATION AND REVIEW	
DRAWN BY	MT
DESIGNER	GYN
PROJ. MGR.	GYN
PEER REVIEW	

SHEET NUMBER:

T0.1-1

NUMBER: OF:

© Users\Mike Mahoney\Desktop\Contra Costa Fine Arts Remodel - CAD Work 5-11\CAD files\T0.1-1 TITLE SHEET.dwg 6/17/2011 9:54 AM Mike Mahoney

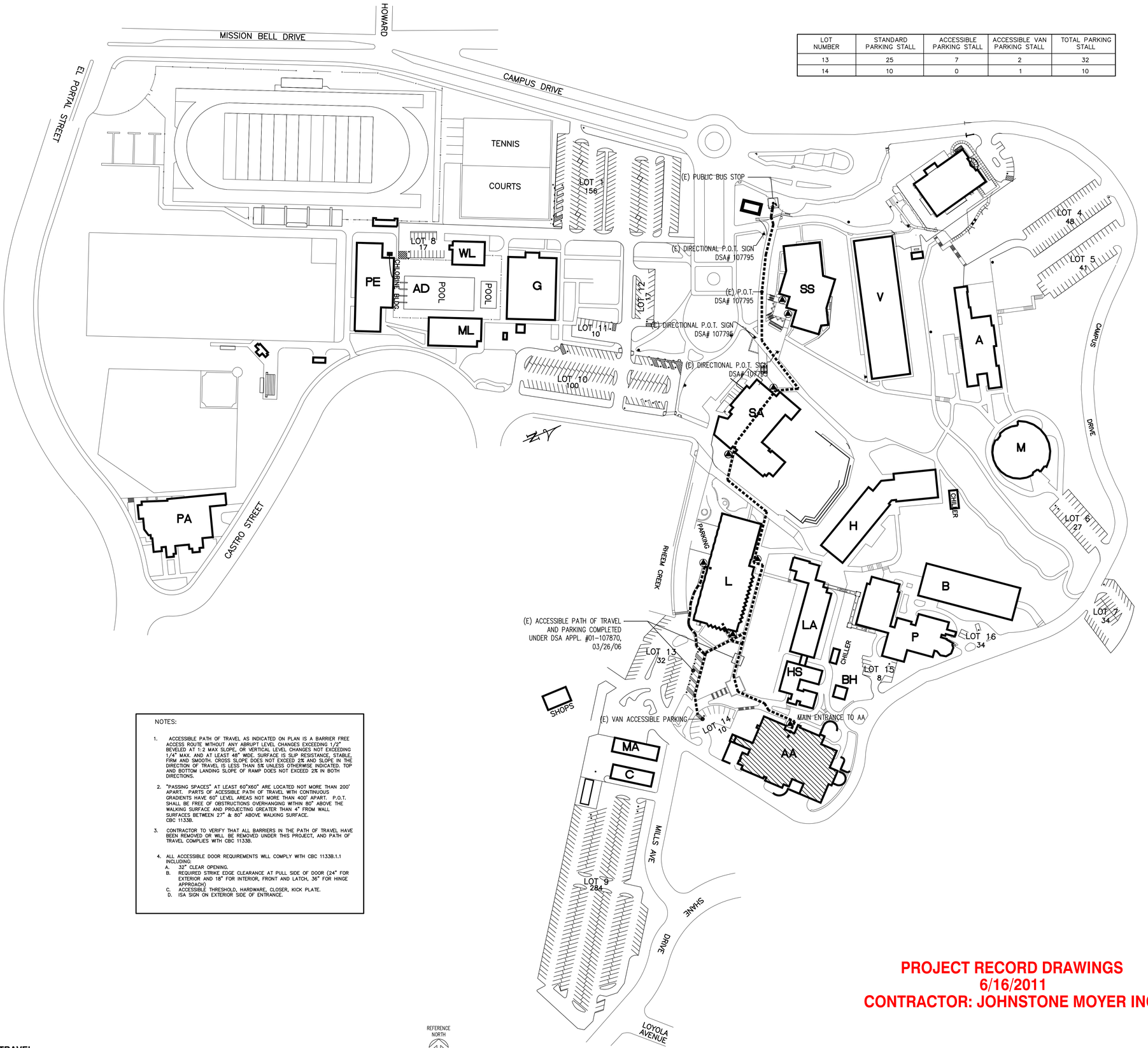

LOT NUMBER	STANDARD PARKING STALL	ACCESSIBLE PARKING STALL	ACCESSIBLE VAN PARKING STALL	TOTAL PARKING STALL
13	25	7	2	32
14	10	0	1	10

NOTES:

1. ACCESSIBLE PATH OF TRAVEL AS INDICATED ON PLAN IS A BARRIER FREE ACCESS ROUTE WITHOUT ANY ABRUPT LEVEL CHANGES EXCEEDING 1/2" BEVELED AT 1:2 MAX SLOPE, OR VERTICAL LEVEL CHANGES NOT EXCEEDING 1/4" MAX. AND AT LEAST 48" WIDE. SURFACE IS SLIP RESISTANCE, STABLE, FIRM AND SMOOTH. CROSS SLOPE DOES NOT EXCEED 2% AND SLOPE IN THE DIRECTION OF TRAVEL IS LESS THAN 5% UNLESS OTHERWISE INDICATED. TOP AND BOTTOM LANDING SLOPE OF RAMP DOES NOT EXCEED 2% IN BOTH DIRECTIONS.
2. "PASSING SPACES" AT LEAST 60"X60" ARE LOCATED NOT MORE THAN 200' APART. PARTS OF ACCESSIBLE PATH OF TRAVEL WITH CONTINUOUS GRADIENTS HAVE 60" LEVEL AREAS NOT MORE THAN 400' APART. P.O.T. SHALL BE FREE OF OBSTRUCTIONS OVERHANGING WITHIN 80" ABOVE THE WALKING SURFACE AND PROJECTING GREATER THAN 4" FROM WALL SURFACES BETWEEN 27" & 80" ABOVE WALKING SURFACE. CBC 1133B.
3. CONTRACTOR TO VERIFY THAT ALL BARRIERS IN THE PATH OF TRAVEL HAVE BEEN REMOVED OR WILL BE REMOVED UNDER THIS PROJECT, AND PATH OF TRAVEL COMPLIES WITH CBC 1133B.
4. ALL ACCESSIBLE DOOR REQUIREMENTS WILL COMPLY WITH CBC 1133B.1.1 INCLUDING:
   A. 32" CLEAR OPENING.
   B. REQUIRED STRIKE EDGE CLEARANCE AT PULL SIDE OF DOOR (24" FOR EXTERIOR AND 18" FOR INTERIOR, FRONT AND LATCH, 36" FOR HINGE APPROACH)
   C. ACCESSIBLE THRESHOLD, HARDWARE, CLOSER, KICK PLATE.
   D. ISA SIGN ON EXTERIOR SIDE OF ENTRANCE.

REFERENCE NORTH

PROJECT RECORD DRAWINGS
6/16/2011
CONTRACTOR: JOHNSTONE MOYER INC.

20 **(E) SITE PLAN/PATH OF TRAVEL**
SCALE: NTS

REVISION	DESCRIPTION	INITIAL	DATE
1	ADDENDUM NO. 1 145 AND 137		12.23.09
2	ADDENDUM NO. 2 145 AND 137		01.07.10
	ASI NO. 2 FIRST FLR MEN'S ROOM		05.07.10
3	ASI NO. 3 AV EQUIP. @ 137, 143, 145		05.20.10
4	RCP 04 MARKERBOARDS		05.20.10
5	RCP 10 ADD DOOR AT SQUAD RM.		09.28.10

ISSUED FOR PROGRESS REVIEW	
ISSUED FOR PLAN CHECK – DSA	07/01/09
ISSUED FOR PERMIT	
ISSUED FOR BID	11/18/09
ISSUED FOR CONSTRUCTION	

SEAL:

CONSULTANT:

INTERACTIVE RESOURCES
ARCHITECTURE • PLANNING • ENGINEERING
117 PARK PLACE
POINT RICHMOND
CALIFORNIA 94801
(510) 236-7435
(FAX) 232-5325
http://www.intres.com

PROJECT:

APPLIED ARTS REMODEL

CONTRA COSTA COLLEGE
2600 MISSION BELL DR.
SAN PABLO, CA.

CONTRA COSTA COMMUNITY COLLEGE DISTRICT

SHEET TITLE:

(E) SITE PLAN/ PATH OF TRAVEL

PROJ. NO.	2008-090.01
PREPARATION AND REVIEW	
DRAWN BY	MT
DESIGNER	GYN
PROJ. MGR.	GYN
PEER REVIEW	

SHEET NUMBER:

A1.0

NUMBER: OF:

C:\Users\Mike Mahoney\Desktop\Contra Costa Fine Arts Remodel - CAD Work 5-11\CAD files\A1.0 (E) PATH OF TRAVEL.dwg 1/7/2011 9:39 AM Mike Mahoney

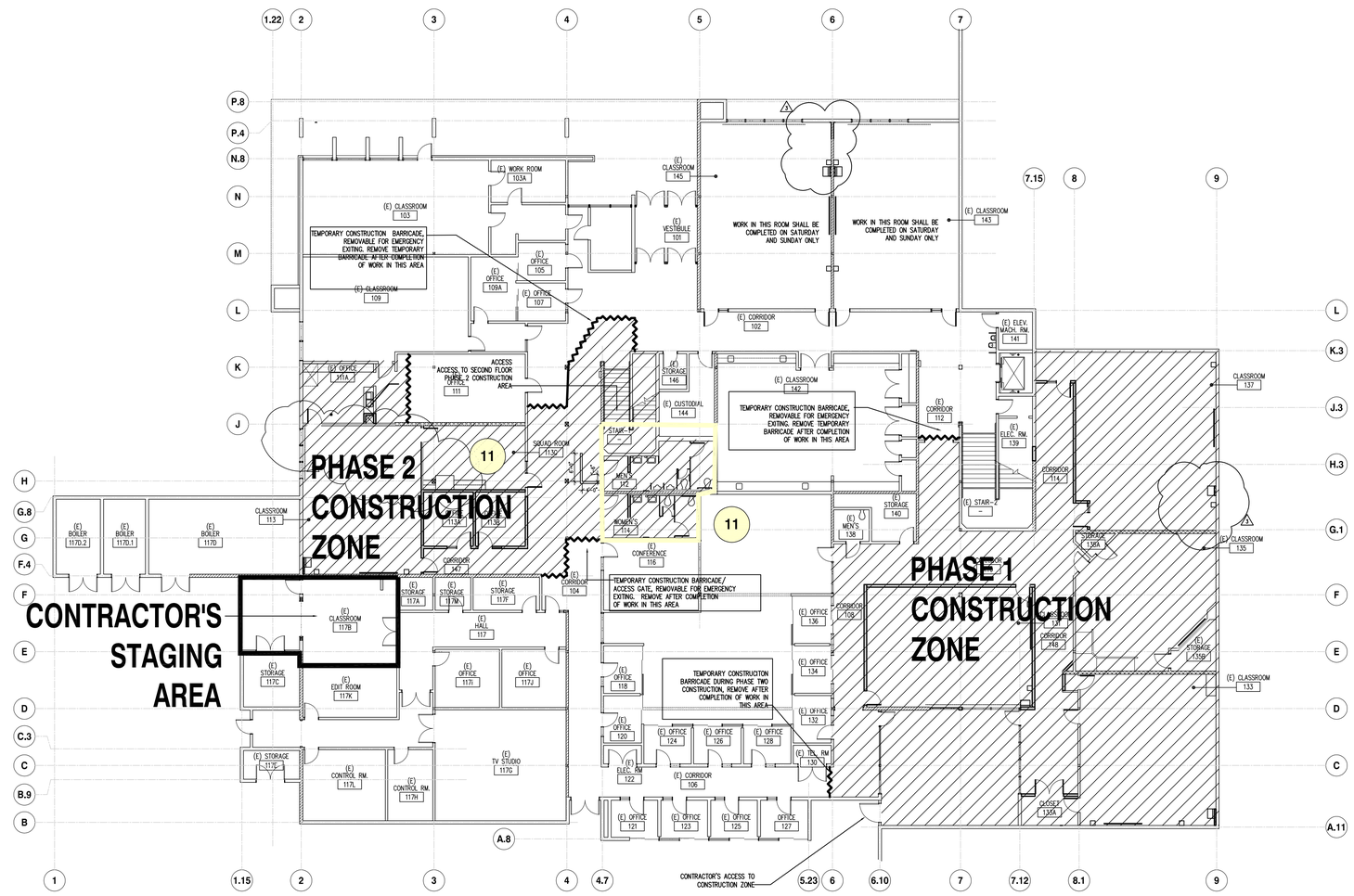

PROJECT RECORD DRAWINGS
6/16/2011
CONTRACTOR: JOHNSTONE MOYER INC.

REVISION	DESCRIPTION	INITIAL	DATE
1	ADDENDUM NO. 1 145 AND 137		12.23.09
2	ADDENDUM NO. 2 145 AND 137		01.07.10
	ASI NO. 2 FIRST FLR MEN'S ROOM		05.07.10
3	ASI NO. 3 AV EQUIP. @ 137, 143, 145		05.20.10
4	RCP 04 MARKERBOARDS		05.20.10
5	RCP 10 ADD DOOR AT SQUAD RM.		09.28.10

ISSUED FOR PROGRESS REVIEW	
ISSUED FOR PLAN CHECK – DSA	07/01/09
ISSUED FOR PERMIT	
ISSUED FOR BID	11/18/09
ISSUED FOR CONSTRUCTION	

SEAL:

CONSULTANT:

INTERACTIVE RESOURCES
ARCHITECTURE • PLANNING • ENGINEERING
117 PARK PLACE
POINT RICHMOND
CALIFORNIA 94801
(510) 236-7435
(FAX) 232-5325
http://www.intres.com

PROJECT:

APPLIED ARTS REMODEL

CONTRA COSTA COLLEGE
2600 MISSION BELL DR.
SAN PABLO, CA.

CONTRA COSTA COMMUNITY COLLEGE DISTRICT

SHEET TITLE:

FIRST FLOOR CONSTRUCTION PHASING PLAN

PROJ. NO.	2008-090.01
PREPARATION AND REVIEW	
DRAWN BY	MT
DESIGNER	GYN
PROJ. MGR.	GYN
PEER REVIEW	

SHEET NUMBER:

A1.01

NUMBER: OF:

© Users\Mac Mahoney\Desktop\Contra Costa Fine Arts Remodel - CAD Work 5-1-11\CAD files\A1.01 FIRST FLOOR PHASING.dwg 6/17/2011 9:27 AM Mac Mahoney

FURNITURE RELOCATION/STORAGE NOTES:

PRIOR TO START OF CONSTRUCTION WORK, CONTRACTOR SHALL RELOCATE ALL EXISTING FURNITURE TO THE HUMANITIES BUILDING FOR SAFE STORAGE. ALL EXISTING FURNITURE INCLUDES BUT NOT LIMITED TO; STUDENT DESKS, CHAIRS, TABLES, WORK SURFACES, INSTRUCTOR'S DESKS, LOCKERS AND FILE CABINETS. CONTRACTOR SHALL PREPARE A ROOM BY ROOM INVENTORY OF ALL EXISTING FURNITURE (TYPE AND QUANTITY) TO BE MOVED TO THE HUMANITIES BUILDING. SUBMIT INVENTORY TO THE COLLEGE FOR REVIEW AND APPROVAL. EXACT DESTINATION AT THE HUMANITIES BUILDING TO BE DETERMINED.

RELOCATE EXISTING FURNITURE FROM ALL AREAS AFFECTED BY THIS CONTRACT INCLUDING BUT NOT LIMITED TO THE FOLLOWING ROOMS:

CLASSROOM 113
CLASSROOM 131
CLASSROOM 133
CONFERENCE 133B
CLASSROOM 135
CLASSROOM 137
CLASSROOM 143
CLASSROOM 145
CORRIDOR 104

DEMOLITION NOTES

1. DEMOLITION PLANS ARE DIAGRAMMATIC AND DO NOT SHOW ALL ITEMS TO BE REMOVED AND REINSTALLED. CONTRACTOR TO REVIEW SITE AND DETERMINE ENTIRE EXTENT OF WORK.
2. AS –BUILT / RECORD DRAWINGS ARE AVAILABLE FOR CONTRACTOR REVIEW AT THE COLLEGE MAINTENANCE DEPARTMENT CONTACT FOR AN APPOINTMENT OF ANY FILED VERIFICATIONS, DISCREPANCIES, AMBIGUITIES OR CONFLICTS IN THE BIDDING DOCUMENTS. CONTRACTOR TO ASCERTAIN EXISTING CONDITIONS AND LIMITATIONS, INCLUDING THOSE AFFECTING LABOR AND MATERIALS, AND SHALL INCLUDE AN AMOUNT IN THE BASE BID SUFFICIENT TO DO THE WORK.
3. CONTRACTOR TO REMOVE ALL ITEMS INCLUDING BUT NOT LIMITED TO PLUMBING FIXTURES, MIRRORS, SHELVES, LIGHT SWITCHES, ELECTRICAL OUTLETS. FIRE ALARM SYSTEM DEVICES, WALL FRAMING, GYPSUM BOARD, PIPE FITTINGS, ETC. AND OTHER ITEMS AS MAY BE REQUIRED TO PERFORM THE WORK PER CONTRACT DOCUMENTS.
4. CONTRACTOR TO REMOVE IN GOOD CONDITION, PROTECT, AND DELIVER TO THE OWNER THOSE ITEMS DESIGNATED OR SPECIFIED TO BE SALVAGED. OR OTHER ITEMS SUBSEQUENTLY INDICATED TO BE SALVAGED, AND NOT TO BE REINSTALLED IN PROJECT. RECORD ALL ITEMS AND COPY TO OWNER.
5. CONTRACTOR TO STORE AND PROTECT ALL ITEMS TO BE REUSED IN THE PROJECT, I.E. (E) OR "EXISTING", WALLS, DOORS AND OTHER ITEMS CALLED FOR IN THE CONTRACT DOCUMENTS. CONTRACTOR HAS THE OPTION TO PROVIDE NEW MATERIAL AT NO ADDITIONAL COST, EQUAL TO EXISTING ITEMS, TO BE REUSED IN LIEU OF REUSING EXISTING ITEMS.
6. FOR ELECTRICAL DEMO, SEE ELECTRICAL DRAWINGS
7. FOR MECHANICAL/PLUMBING DEMO, SEE MECHANICAL DRAWINGS.
8. PATCH AND MATCH AREAS REQUIRING PARTIAL REMOVAL OF FINISH SURFACES.
9. PATCH AND MATCH FLOOR, WALL AND CEILING FINISHED AS REQUIRED

PROJECT RECORD DRAWINGS
6/16/2011
CONTRACTOR: JOHNSTONE MOYER INC.

LEGEND

- EXISTING WALL TO REMAIN
- EXISTING PLYWD. SHEAR WALL TO REMAIN
- EXISTING CONC. WALL TO REMAIN
- REMOVE EXISTING

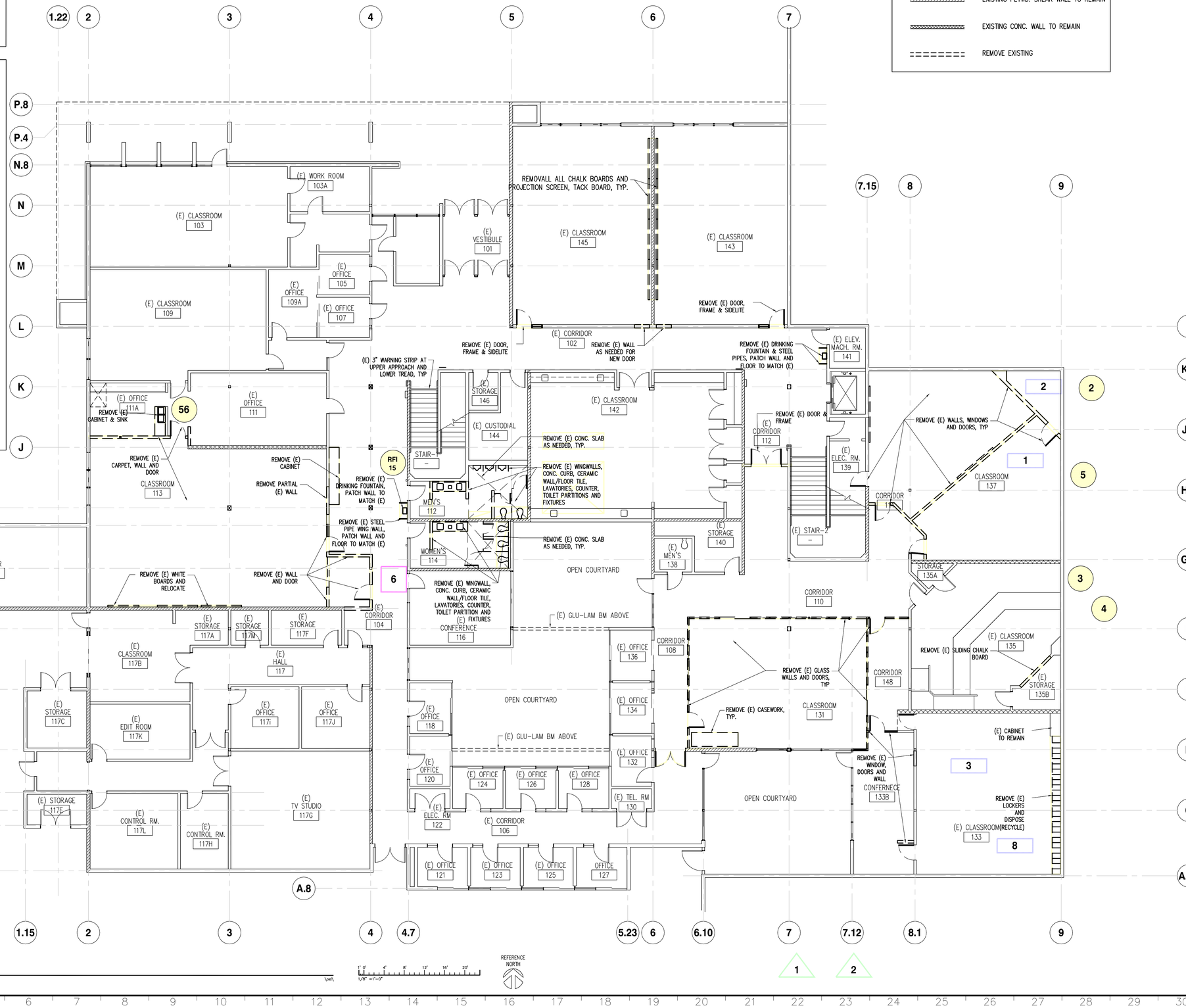

20 **FIRST FLOOR - DEMO**
SCALE: 1/8"=1'-0"

1" 0" 4' 8' 12' 16' 20'
1/8" =1'-0"

REFERENCE NORTH

REVISION	DESCRIPTION	INITIAL	DATE
1	ADDENDUM NO. 1 145 AND 137		12.23.09
2	ADDENDUM NO. 2 145 AND 137		01.07.10
	ASI NO. 2 FIRST FLR MEN'S ROOM		05.07.10
3	ASI NO. 3 AV EQUIP. @ 137, 143, 145		05.20.10
4	RCP 04 MARKERBOARDS		05.20.10
5	RCP 10 ADD DOOR AT SQUAD RM.		09.28.10

ISSUED FOR PROGRESS REVIEW	
ISSUED FOR PLAN CHECK – DSA	07/01/09
ISSUED FOR PERMIT	
ISSUED FOR BID	11/18/09
ISSUED FOR CONSTRUCTION	

SEAL:

CONSULTANT:

INTERACTIVE RESOURCES
ARCHITECTURE • PLANNING • ENGINEERING
117 PARK PLACE
POINT RICHMOND
CALIFORNIA 94801
(510) 236–7435
(FAX) 232–5325
http://www.intres.com

PROJECT:

APPLIED ARTS REMODEL

CONTRA COSTA COLLEGE
2600 MISSION BELL DR.
SAN PABLO, CA.

CONTRA COSTA COMMUNITY COLLEGE DISTRICT

SHEET TITLE:

FIRST FLOOR - DEMO

PROJ. NO.	2008–090.01
	PREPARATION AND REVIEW
DRAWN BY	MT
DESIGNER	GYN
PROJ. MGR.	GYN
PEER REVIEW	

SHEET NUMBER:

A1.1

NUMBER: OF:

© \\pwrk\Mike Mahoney\Desktop\Contra Costa Fine Arts Remodel – CAD Work 5-11\CAD files\A1\ FIRST FLOOR DEMO.dwg 4/7/2011 9:29 AM Mike Mahoney

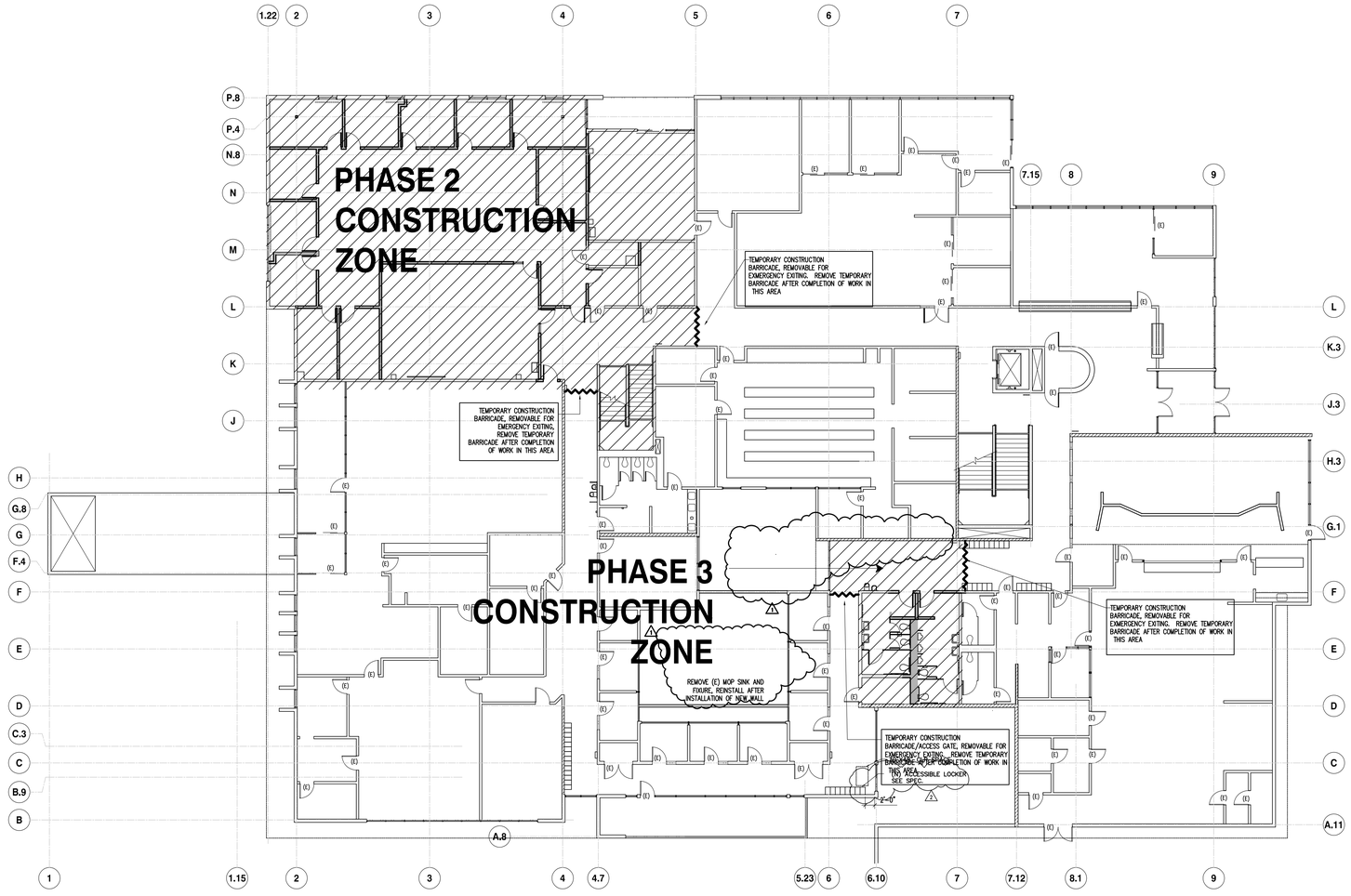

second floor

CONSTRUCTION PHASING NOTES:

1. WORK IN DESIGNATED CONSTRUCTION PHASED AREAS (HATCHED AREAS) SHALL BE COMPLETED DURING NORMAL WORK HOURS (7AM TO 4PM).
2. BALANCE OF WORK IN UNHATCHED AREAS SHALL BE COMPLETED ON SATURDAY AND SUNDAY ONLY. CONTRACTOR SHALL SUBMIT WEEKEND WORK SCHEDULE TO OWNER FOR APPROVAL.
3. WHERE THE CONTRACTOR WILL BE TRAVELING THROUGH AREAS BEING USED BY STUDENTS AND STAFF, MATERIAL DELIVERY AND REMOVAL OF DEMOLITION OFF-HAUL MAY ONLY OCCUR FROM 6 AM TO 7 AM WEEKDAYS.
4. A FIRE WATCH IS REQUIRED WHEN THE FIRE ALARM IS OUT OF SERVICE. SEE ELECTRICAL DRAWINGS.
5. FOR ESTABLISHING THE DATE OF SUBSTANTIAL COMPLETION, THE CONTRACT TIME FOR THE BASE BIDS SHALL BE 210 CALENDAR DAYS AFTER DATE OF NOTICE TO PROCEED INCLUDING BUT NOT LIMITED TO THE FOLLOWING:
   - PHASE 1 MILESTONE COMPLETION IS 120 CALENDAR DAYS FROM NOTICE TO PROCEED.
   - PHASE 1 CONSTRUCTION MUST BE COMPLETE BEFORE STARTING PHASE 2 CONSTRUCTION.
   - PHASE 2 CONSTRUCTION MUST BE COMPLETE BEFORE STARTING PHASE 3 CONSTRUCTION.
   - OVERALL PROJECT MUST BE COMPLETED WITHIN 210 CALENDAR DAYS FROM NOTICE TO PROCEED.
7. CONTRACTOR SHALL MAINTAIN ACCESSIBLE PATH OF TRAVEL TO ALL OCCUPIED AREAS DURING ENTIRE CONSTRUCTION AT ALL PHASING, TYPICAL.

PROJECT RECORD DRAWINGS
6/16/2011
CONTRACTOR: JOHNSTONE MOYER INC.

REVISION	DESCRIPTION	INITIAL	DATE
1	ADDENDUM NO. 1 145 AND 137		12.23.09
2	ADDENDUM NO. 2 145 AND 137		01.07.10
	ASI NO. 2 FIRST FLR MEN'S ROOM		05.07.10
3	ASI NO. 3 AV EQUIP. @ 137, 143, 145		05.20.10
4	RCP 04 MARKERBOARDS		05.20.10
5	RCP 10 ADD DOOR AT SQUAD RM.		09.28.10

ISSUED FOR PROGRESS REVIEW	
ISSUED FOR PLAN CHECK – DSA	07/01/09
ISSUED FOR PERMIT	
ISSUED FOR BID	11/18/09
ISSUED FOR CONSTRUCTION	

SEAL:

CONSULTANT:

INTERACTIVE RESOURCES
ARCHITECTURE • PLANNING • ENGINEERING
117 PARK PLACE
POINT RICHMOND
CALIFORNIA 94801
(510) 236-7435
(FAX) 232-5325
http//www.intres.com

PROJECT:

APPLIED ARTS REMODEL

CONTRA COSTA COLLEGE
2600 MISSION BELL DR.
SAN PABLO, CA.

CONTRA COSTA COMMUNITY COLLEGE DISTRICT

SHEET TITLE:

SECOND FLOOR CONSTRUCTION PHASING PLAN

PROJ. NO.	2008-090.01
	PREPARATION AND REVIEW
DRAWN BY	MT
DESIGNER	GYN
PROJ. MGR.	GYN
PEER REVIEW	

SHEET NUMBER:

A1.02

NUMBER: OF:

© Users\Mike Mahoney\Desktop\Contra Costa Fine Arts Remodel - CAD Work 5-11\CAD files\A1.02 SECOND FLOOR PHASING.dwg 6/17/2011 9:54 AM Mike Mahoney

FURNITURE RELOCATION/STORAGE NOTES:

PRIOR TO START OF CONSTRUCTION WORK, CONTRACTOR SHALL RELOCATE ALL EXISTING FURNITURE TO THE HUMANITIES BUILDING FOR SAFE STORAGE. ALL EXISTING FURNITURE INCLUDES BUT NOT LIMITED TO; STUDENT DESKS, CHAIRS, TABLES, WORK SURFACES, INSTRUCTOR'S DESKS, LOCKER AND FILE CABINETS. CONTRACTOR SHALL PREPARE A ROOM BY ROOM INVENTORY OF ALL EXISTING FURNITURE (TYPE AND QUANTITY) TO BE MOVED TO THE HUMANITIES BUILDING. SUBMIT INVENTORY TO THE COLLEGE FOR REVIEW AND APPROVAL. EXACT DESTINATION AT THE HUMANITIES BUILDING TO BE DETERMINED.

RELOCATE EXISTING FURNITURE FROM THE FOLLOWING ROOMS:

ROOM 250
ROOM 252
STORAGE 253
OFFICE A
OFFICE B
OFFICE C
CORRIDOR 293

DEMOLITION NOTES

1. DEMOLITION PLANS ARE DIAGRAMMATIC AND DO NOT SHOW ALL ITEMS TO BE REMOVED AND REINSTALLED. CONTRACTOR TO REVIEW SITE AND DETERMINE ENTIRE EXTENT OF WORK.
2. AS –BUILT / RECORD DRAWINGS ARE AVAILABLE FOR CONTRACTOR REVIEW AT THE COLLEGE MAINTENANCE DEPARTMENT CONTACT FOR AN APPOINTMENT OF ANY FILED VERIFICATIONS, DISCREPANCIES, AMBIGUITIES OR CONFLICTS IN THE BIDDING DOCUMENTS. CONTRACTOR TO ASCERTAIN EXISTING CONDITIONS AND LIMITATIONS, INCLUDING THOSE AFFECTING LABOR AND MATERIALS, AND SHALL INCLUDE AN AMOUNT IN THE BASE BID SUFFICIENT TO DO THE WORK.
3. CONTRACTOR TO REMOVE ALL ITEMS INCLUDING BUT NOT LIMITED TO PLUMBING FIXTURES, MIRRORS, SHELVES, LIGHT SWITCHES, ELECTRICAL OUTLETS. FIRE ALARM SYSTEM DEVICES, WALL FRAMING, GYPSUM BOARD, PIPE FITTINGS, ETC. AND OTHER ITEMS AS MAY BE REQUIRED TO PERFORM THE WORK PER CONTRACT DOCUMENTS.
4. CONTRACTOR TO REMOVE IN GOOD CONDITION, PROTECT, AND DELIVER TO THE OWNER THOSE ITEMS DESIGNATED OR SPECIFIED TO BE SALVAGED. OR OTHER ITEMS SUBSEQUENTLY INDICATED TO BE SALVAGED, AND NOT TO BE REINSTALLED IN PROJECT. RECORD ALL ITEMS AND COPY TO OWNER.
5. CONTRACTOR TO STORE AND PROTECT ALL ITEMS TO BE REUSED IN THE PROJECT, I.E. (E) OR "EXISTING", WALLS, DOORS AND OTHER ITEMS CALLED FOR IN THE CONTRACT DOCUMENTS. CONTRACTOR HAS THE OPTION TO PROVIDE NEW MATERIAL AT NO ADDITIONAL COST, EQUAL TO EXISTING ITEMS, TO BE REUSED IN LIEU OF REUSING EXISTING ITEMS.
6. FOR ELECTRICAL DEMO, SEE ELECTRICAL DRAWINGS
7. FOR MECHANICAL/PLUMBING DEMO, SEE MECHANICAL DRAWINGS.
8. PATCH AND MATCH AREAS REQUIRING PARTIAL REMOVAL OF FINISH SURFACES.
9. PATCH AND MATCH FLOOR, WALL AND CEILING FINISHED AS REQUIRED

PROJECT RECORD DRAWINGS
6/16/2011
CONTRACTOR: JOHNSTONE MOYER INC.

LEGEND

- EXISTING WALL TO REMAIN
- EXISTING PLYWD. SHEAR WALL TO REMAIN
- EXISTING CONC. WALL TO REMAIN
- REMOVE EXISTING

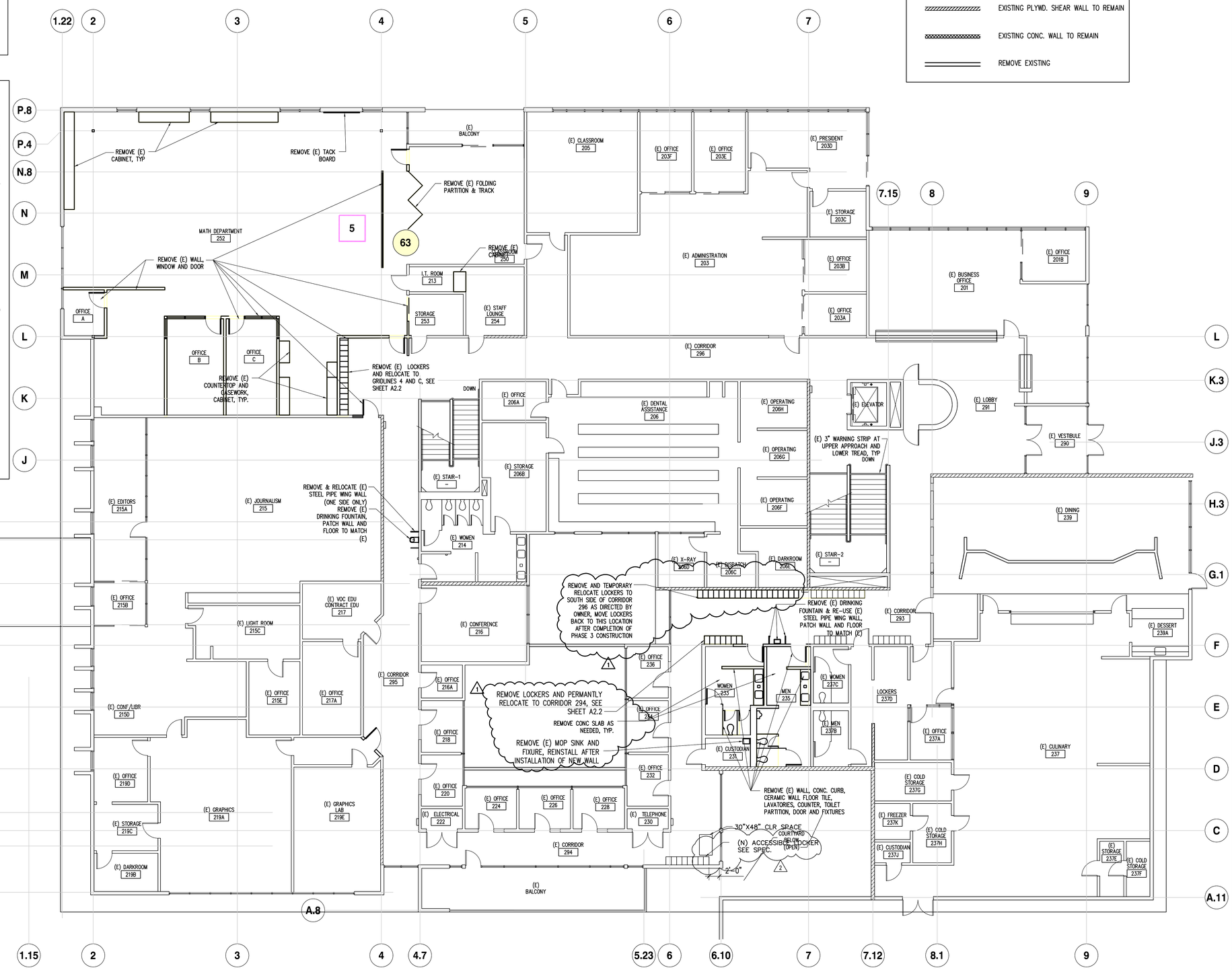

REVISION	DESCRIPTION	INITIAL	DATE
1	ADDENDUM NO. 1 145 AND 137		12.23.09
2	ADDENDUM NO. 2 145 AND 137		01.07.10
	ASI NO. 2 FIRST FLR MEN'S ROOM		05.07.10
3	ASI NO. 3 AV EQUIP. @ 137, 143, 145		05.20.10
4	RCP 04 MARKERBOARDS		05.20.10
5	RCP 10 ADD DOOR AT SQUAD RM.		09.28.10

ISSUED FOR PROGRESS REVIEW	
ISSUED FOR PLAN CHECK – DSA	07/01/09
ISSUED FOR PERMIT	
ISSUED FOR BID	11/18/09
ISSUED FOR CONSTRUCTION	

SEAL:

CONSULTANT:

INTERACTIVE RESOURCES
ARCHITECTURE • PLANNING • ENGINEERING
117 PARK PLACE
POINT RICHMOND
CALIFORNIA 94801
(510) 236–7435
(FAX) 232–5325
http://www.intres.com

PROJECT:

APPLIED ARTS REMODEL

CONTRA COSTA COLLEGE
2600 MISSION BELL DR.
SAN PABLO, CA.

CONTRA COSTA COMMUNITY COLLEGE DISTRICT

SHEET TITLE:

SECOND FLOOR - DEMO

PROJ. NO.	2008-090.01
PREPARATION AND REVIEW	
DRAWN BY	MT
DESIGNER	GYN
PROJ. MGR.	GYN
PEER REVIEW	

SHEET NUMBER:

A1.2

NUMBER: OF:

20 **SECOND FLOOR - DEMO**
SCALE: 1/8"=1'-0"

REFERENCE NORTH

© Interactive Resources, Inc. 2011



20 **FIRST FLOOR - CEILING DEMO PLAN**
SCALE: 1/8"=1'-0"

1' 0" 4' 8' 12' 16' 20'
1/8" =1'-0"

REFERENCE NORTH

PROJECT RECORD DRAWINGS
6/16/2011
CONTRACTOR: JOHNSTONE MOYER INC.

REVISION	DESCRIPTION	INITIAL	DATE
1	ADDENDUM NO. 1 145 AND 137		12.23.09
2	ADDENDUM NO. 2 145 AND 137		01.07.10
	ASI NO. 2 FIRST FLR MEN'S ROOM		05.07.10
3	ASI NO. 3 AV EQUIP. @ 137, 143, 145		05.20.10
4	RCP 04 MARKERBOARDS		05.20.10
5	RCP 10 ADD DOOR AT SQUAD RM.		09.28.10

ISSUED FOR PROGRESS REVIEW	
ISSUED FOR PLAN CHECK – DSA	07/01/09
ISSUED FOR PERMIT	
ISSUED FOR BID	11/18/09
ISSUED FOR CONSTRUCTION	

SEAL:

CONSULTANT:

INTERACTIVE RESOURCES
ARCHITECTURE • PLANNING • ENGINEERING
117 PARK PLACE
POINT RICHMOND
CALIFORNIA 94801
(510) 236-7435
(FAX) 232-5325
http://www.intres.com

PROJECT:

APPLIED ARTS REMODEL

CONTRA COSTA COLLEGE
2600 MISSION BELL DR.
SAN PABLO, CA.

CONTRA COSTA COMMUNITY COLLEGE DISTRICT

SHEET TITLE:

FIRST FLOOR - CEILING DEMO PLAN

PROJ. NO.	2008-090.01
PREPARATION AND REVIEW	
DRAWN BY	MT
DESIGNER	GYN
PROJ. MGR.	GYN
PEER REVIEW	

SHEET NUMBER:

A1.3

NUMBER: OF:

C:\Users\Mike Mahoney\Desktop\Contra Costa Fine Arts Remodel - CAD Work 5-11\CAD Work\A1.3 FIRST FLOOR CEILING DEMO PLAN.dwg, 6/17/2011 9:58 AM, Mike Mahoney

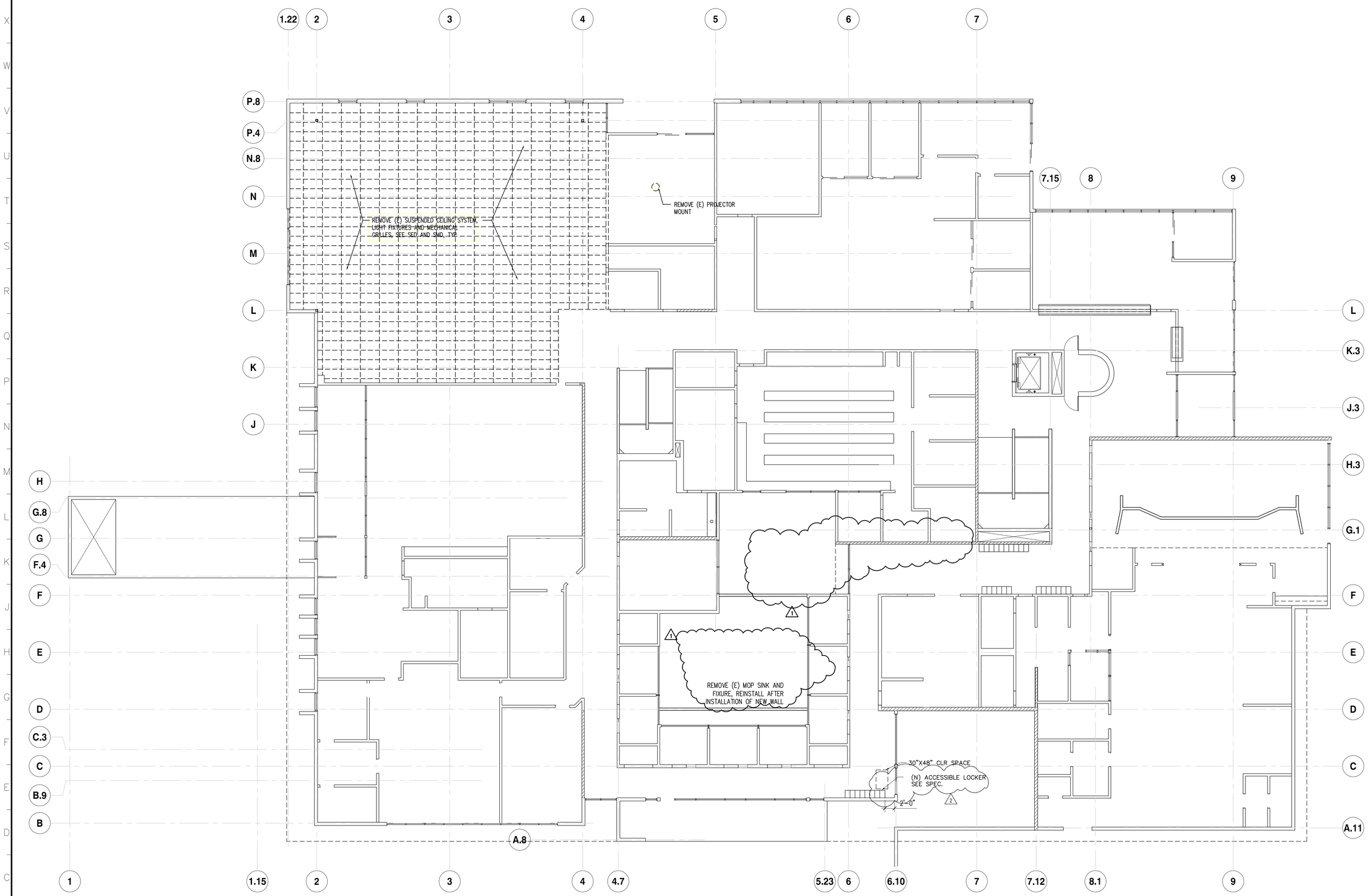

20 SECOND FLOOR - CEILING DEMO PLAN
SCALE: 1/8"=1'-0"

REFERENCE NORTH

PROJECT RECORD DRAWINGS
6/16/2011
CONTRACTOR: JOHNSTONE MOYER INC.

REVISION	DESCRIPTION	INITIAL	DATE
1	ADDENDUM NO. 1 145 AND 137		12.23.09
2	ADDENDUM NO. 2 145 AND 137		01.07.10
	ASI NO. 2 FIRST FLR MEN'S ROOM		05.07.10
3	ASI NO. 3 AV EQUIP. @ 137, 143, 145		05.20.10
4	RCP 04 MARKERBOARDS		05.20.10
5	RCP 10 ADD DOOR AT SQUAD RM.		09.28.10

ISSUED FOR PROGRESS REVIEW	
ISSUED FOR PLAN CHECK – DSA	07/01/09
ISSUED FOR PERMIT	
ISSUED FOR BID	11/18/09
ISSUED FOR CONSTRUCTION	

SEAL:

CONSULTANT:

INTERACTIVE RESOURCES
ARCHITECTURE • PLANNING • ENGINEERING
117 PARK PLACE
POINT RICHMOND
CALIFORNIA 94801
(510) 236-7435
(FAX) 232-5325
http//www.intres.com

PROJECT:

APPLIED ARTS REMODEL

CONTRA COSTA COLLEGE
2600 MISSION BELL DR.
SAN PABLO, CA.

CONTRA COSTA COMMUNITY COLLEGE DISTRICT

SHEET TITLE:

SECOND FLOOR - CEILING DEMO PLAN

PROJ. NO.	2008-090.01
PREPARATION AND REVIEW	
DRAWN BY	MT
DESIGNER	GYN
PROJ. MGR.	GYN
PEER REVIEW	

SHEET NUMBER:

A1.4

NUMBER: OF:

NOTES:

1. ACCESSIBLE PATH OF TRAVEL AS INDICATED ON PLAN IS A BARRIER FREE ACCESS ROUTE WITHOUT ANY ABRUPT LEVEL CHANGES EXCEEDING 1/2" BEVELED AT 1:2 MAX SLOPE, OR VERTICAL LEVEL CHANGES NOT EXCEEDING 1/4" MAX. AND AT LEAST 48" WIDE. SURFACE IS SLIP RESISTANCE, STABLE, FIRM AND SMOOTH. CROSS SLOPE DOES NOT EXCEED 2% AND SLOPE IN THE DIRECTION OF TRAVEL IS LESS THAN 5% UNLESS OTHERWISE INDICATED. TOP AND BOTTOM LANDING SLOPE OF RAMP DOES NOT EXCEED 2% IN BOTH DIRECTIONS.

2. "PASSING SPACES" AT LEAST 60"X60" ARE LOCATED NOT MORE THAN 200' APART. PARTS OF ACCESSIBLE PATH OF TRAVEL WITH CONTINUOUS GRADIENTS HAVE 60" LEVEL AREAS NOT MORE THAN 400' APART. P.O.T. SHALL BE FREE OF OBSTRUCTIONS OVERHANGING WITHIN 80" ABOVE THE WALKING SURFACE AND PROJECTING GREATER THAN 4" FROM WALL SURFACES BETWEEN 27" & 80" ABOVE WALKING SURFACE.
CBC 1133B.

3. CONTRACTOR TO VERIFY THAT ALL BARRIERS IN THE PATH OF TRAVEL HAVE BEEN REMOVED OR WILL BE REMOVED UNDER THIS PROJECT, AND PATH OF TRAVEL COMPLIES WITH CBC 1133B.

4. ALL ACCESSIBLE DOOR REQUIREMENTS WILL COMPLY WITH CBC 1133B.1.1 INCLUDING:
   A. 32" CLEAR OPENING.
   B. REQUIRED STRIKE EDGE CLEARANCE AT PULL SIDE OF DOOR (24" FOR EXTERIOR AND 18" FOR INTERIOR, FRONT AND LATCH, 36" FOR HINGE APPROACH)
   C. ACCESSIBLE THRESHOLD, HARDWARE, CLOSER, KICK PLATE.

ROOM NO.	AREA	LOAD FACTOR	NO. OF OCCUPANTS	EXITS PROVIDED
RM. 113	782 SF.	20	39	1
RM. 113A	120 SF.	100	1	1
RM. 113B	120 SF.	100	1	1
RM. 131	881 SF.	20	44	2
RM. 133	912 SF.	20	46	1
RM. 135	737 SF.	20	37	1
RM. 137	1104 SF.	20	55	2
RM. 143	1039 SF.	20	52	2
RM. 145	1085 SF.	20	54	2

LEGEND:

- EXISTING TO REMAIN
- (E) PLYWD. SHEAR WALL TO REMAIN
- (E) CONC. WALL TO REMAIN
- (N) 2X4 FIRE RATED WALL TO UNDERSIDE OF STRUCT. SEE WALL TYPE SCHEDULE BELOW
- (N) 2X4 NON-RATED WALL TO UNDERSIDE OF STRUCT., SEE WALL TYPE SCHEDULE BELOW
- ACCESSIBLE PATH OF TRAVEL
- (N) 2X4 FURRING TO 6" ABOVE CEILING, SEE WALL TYPE SCHEDULE BELOW
- 8 NO FIRE TREATED WOOD

MAIN ENTRANCE

OPEN COURTYARD

OPEN COURTYARD

OPEN COURTYARD

(E) GLU-LAM BM ABOVE

(E) GLU-LAM BM ABOVE

(N) CABINET /COUNTER WITH SINK

PATCH GYP. BD FINISH AS NEEDED

SCREEN WALL

VERTICAL BLINDS

VERTICAL BLINDS

VERTICAL BLINDS

DIRECTIONAL ACCESS SIGN, SEE 11/A9.4

DIRECTIONAL ACCESS SIGN, SEE 11/A9.4

(E) ELEVATOR, DSA #42256

(E) ELEV. SEE SHT. A9.3 FOR (N) SIGNAGE

INFILL WALL OPENING

PROJECT RECORD DRAWINGS
6/16/2011
CONTRACTOR: JOHNSTONE MOYER INC.

20 FIRST FLOOR PLAN
SCALE: 1/8"=1'-0"

REFERENCE NORTH

WALL TYPE SCHEDULE:

2X STUDS @ 16" OC.
5/8" GYP. BD., TYPE X, BOTH SIDES AT FIRE RATED WALL, TYP. GA. FILE NO. WP. 3514
ACCOUSTICAL INSULATION, TYP.
2X STUD WALL

5/8" GYP. BD.
2X4 FURRING
(E) WALL
FURRED WALL

REVISION	DESCRIPTION	INITIAL	DATE
1	ADDENDUM NO. 1 145 AND 137		12.23.09
2	ADDENDUM NO. 2 145 AND 137		01.07.10
	ASI NO. 2 FIRST FLR MEN'S ROOM		05.07.10
3	ASI NO. 3 AV EQUIP. @ 137, 143, 145		05.20.10
4	RCP 04 MARKERBOARDS		05.20.10
5	RCP 10 ADD DOOR AT SQUAD RM.		09.28.10

ISSUED FOR PROGRESS REVIEW	
ISSUED FOR PLAN CHECK – DSA	07/01/09
ISSUED FOR PERMIT	
ISSUED FOR BID	11/18/09
ISSUED FOR CONSTRUCTION	

SEAL:

CONSULTANT:

INTERACTIVE RESOURCES
ARCHITECTURE • PLANNING • ENGINEERING
117 PARK PLACE
POINT RICHMOND
CALIFORNIA 94801
(510) 236-7435
(FAX) 232-5325
http://www.intres.com

PROJECT:

APPLIED ARTS REMODEL

CONTRA COSTA COLLEGE
2600 MISSION BELL DR.
SAN PABLO, CA.

CONTRA COSTA COMMUNITY COLLEGE DISTRICT

SHEET TITLE:

FIRST FLOOR PLAN

PROJ. NO.	2008-090.01
PREPARATION AND REVIEW	
DRAWN BY	MT
DESIGNER	GYN
PROJ. MGR.	GYN
PEER REVIEW	

SHEET NUMBER:

A2.1

NUMBER: OF:

© Users\Mike Mahoney\Desktop\Contra Costa Fine Arts Remodel – CAD Work 5-11\CAD files\A2.1 FIRST FLOOR.dwg, 1/17/2011 10:37 AM, Mike Mahoney

ROOM NO.	AREA	LOAD FACTOR	NO. OF OCCUPANTS	EXITS PROVIDED
RM. 250	510 SF.	20	26	1
RM. 251	800 SF.	20	13	2
RM. 252	1200 SF.	50	24	1
RM. 252A	107 SF.	100	2	1
RM. 252B	105 SF.	100	2	1
RM. 252C	103 SF.	100	2	1
RM. 252D	153 SF.	100	2	1
RM. 252E	1112 SF.	100	2	1
RM. 252F	112 SF.	100	2	1
RM. 252G	112 SF.	100	2	1
RM. 252H	155 SF.	100	2	1
RM. 252J	150 SF.	100	2	1
RM. 252K	125 SF.	50	3	1
RM. 252L	125 SF.	50	3	1

NOTES:

1. ACCESSIBLE PATH OF TRAVEL AS INDICATED ON PLAN IS A BARRIER FREE ACCESS ROUTE WITHOUT ANY ABRUPT LEVEL CHANGES EXCEEDING 1/2" BEVELED AT 1:2 MAX SLOPE, OR VERTICAL LEVEL CHANGES NOT EXCEEDING 1/4" MAX. AND AT LEAST 48" WIDE. SURFACE IS SLIP RESISTANCE, STABLE, FIRM AND SMOOTH. CROSS SLOPE DOES NOT EXCEED 2% AND SLOPE IN THE DIRECTION OF TRAVEL IS LESS THAN 5% UNLESS OTHERWISE INDICATED. TOP AND BOTTOM LANDING SLOPE OF RAMP DOES NOT EXCEED 2% IN BOTH DIRECTIONS.
2. "PASSING SPACES" AT LEAST 60"X60" ARE LOCATED NOT MORE THAN 200' APART. PARTS OF ACCESSIBLE PATH OF TRAVEL WITH CONTINUOUS GRADIENTS HAVE 60" LEVEL AREAS NOT MORE THAN 400' APART. P.O.T. SHALL BE FREE OF OBSTRUCTIONS OVERHANGING WITHIN 80" ABOVE THE WALKING SURFACE AND PROJECTING GREATER THAN 4" FROM WALL SURFACES BETWEEN 27" & 80" ABOVE WALKING SURFACE. CBC 1133B.
3. CONTRACTOR TO VERIFY THAT ALL BARRIERS IN THE PATH OF TRAVEL HAVE BEEN REMOVED OR WILL BE REMOVED UNDER THIS PROJECT, AND PATH OF TRAVEL COMPLIES WITH CBC 1133B.
4. ALL ACCESSIBLE DOOR REQUIREMENTS WILL COMPLY WITH CBC 1133B.1.1 INCLUDING:
   A. 32" CLEAR OPENING.
   B. REQUIRED STRIKE EDGE CLEARANCE AT PULL SIDE OF DOOR (24" FOR EXTERIOR AND 18" FOR INTERIOR, FRONT AND LATCH, 36" FOR HINGE APPROACH)
   C. ACCESSIBLE THRESHOLD, HARDWARE, CLOSER, KICK PLATE.

LEGEND:

- EXISTING TO REMAIN
- (E) PLYWD. SHEAR WALL TO REMAIN
- (E) CONC. WALL TO REMAIN
- (N) 2X4 (U.O.N.) FIRE RATED WALL TO UNDERSIDE OF STRUCT., SEE WALL TYPE SCHEDULE BELOW
- (N) 2X4 (U.O.N.) NON-RATED WALL TO UNDERSIDE OF STRUCT., SEE WALL TYPE SCHEDULE BELOW
- ACCESSIBLE PATH OF TRAVEL



REVISION	DESCRIPTION	INITIAL	DATE
1	ADDENDUM NO. 1 145 AND 137		12.23.09
2	ADDENDUM NO. 2 145 AND 137		01.07.10
	ASI NO. 2 FIRST FLR MEN'S ROOM		05.07.10
3	ASI NO. 3 AV EQUIP. @ 137, 143, 145		05.20.10
4	RCP 04 MARKERBOARDS		05.20.10
5	RCP 10 ADD DOOR AT SQUAD RM.		09.28.10

ISSUED FOR PROGRESS REVIEW	
ISSUED FOR PLAN CHECK – DSA	07/01/09
ISSUED FOR PERMIT	
ISSUED FOR BID	11/18/09
ISSUED FOR CONSTRUCTION	

SEAL:

CONSULTANT:

INTERACTIVE RESOURCES
ARCHITECTURE • PLANNING • ENGINEERING
117 PARK PLACE
POINT RICHMOND
CALIFORNIA 94801
(510) 236-7435
(FAX) 232-5325
http://www.intres.com

PROJECT:

APPLIED ARTS REMODEL

CONTRA COSTA COLLEGE
2600 MISSION BELL DR.
SAN PABLO, CA.

CONTRA COSTA COMMUNITY COLLEGE DISTRICT

SHEET TITLE:

SECOND FLOOR PLAN

PROJ. NO.	2008-090.01
	PREPARATION AND REVIEW
DRAWN BY	MT
DESIGNER	GYN
PROJ. MGR.	GYN
PEER REVIEW	

SHEET NUMBER:

A2.2

NUMBER: OF:

PROJECT RECORD DRAWINGS
6/16/2011
CONTRACTOR: JOHNSTONE MOYER INC.

second floor

20 SECOND FLOOR PLAN
SCALE: 1/8"=1'-0"

NORTH

© \\pwr\Mtn Mahoney\Desktop\Desktop\Contra Costa Fine Arts Remodel – CCC Bldg 5-111\CAD files\A2.2 second floor.dwg 6/17/2011 10:55 AM Mtn Mahoney

PROJECT RECORD DRAWINGS
6/16/2011
CONTRACTOR: JOHNSTONE MOYER INC.

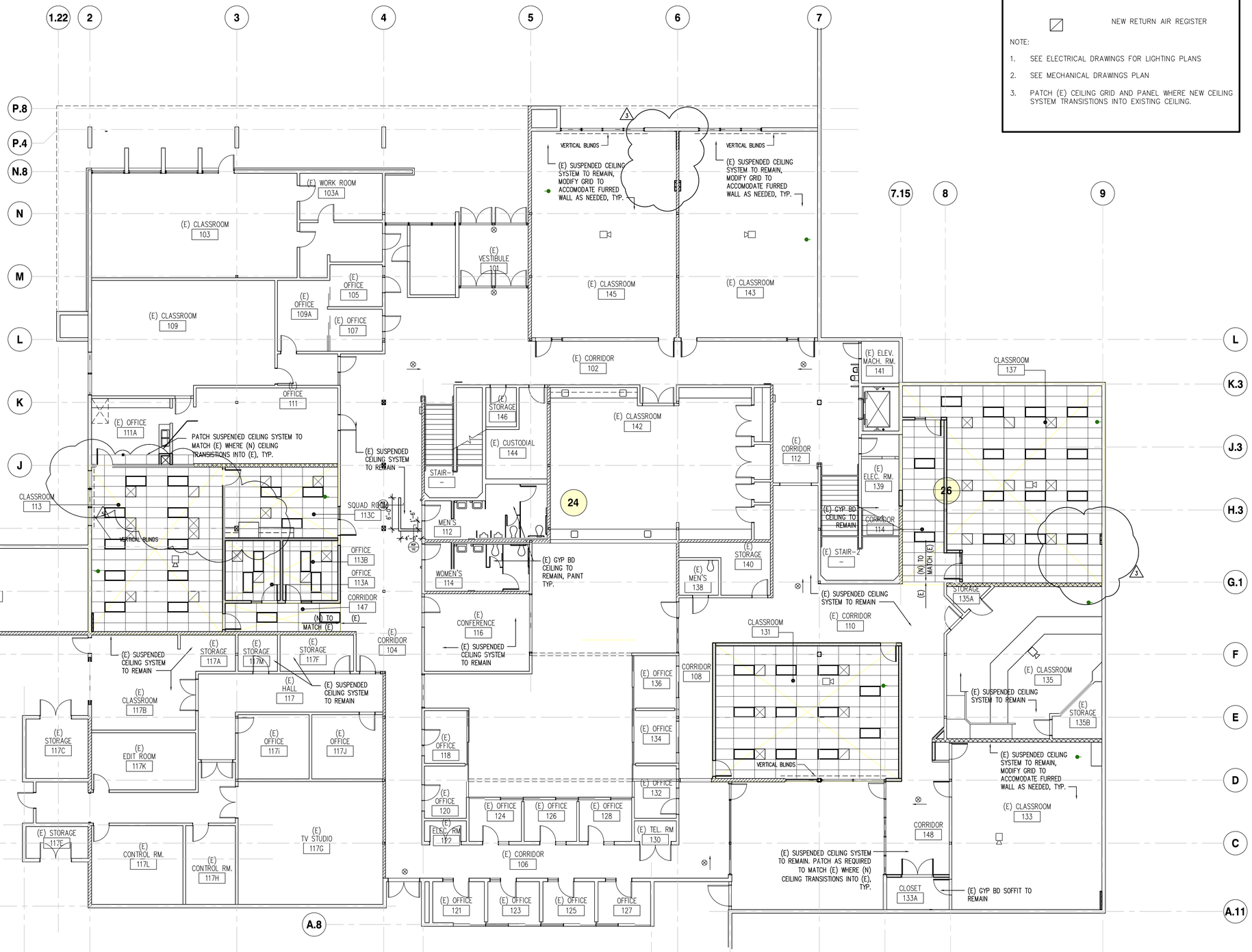

20 **FIRST FLOOR REFLECTED CEILING PLAN**
SCALE: 1/8"=1'-0"

1' 0" 4' 8' 12' 16' 20'
1/8" =1'-0"

REFERENCE NORTH

LEGEND:

- NEW 2x4 SUSPENDED ACOUSTICAL CEILING WITH 2x4 FLOURESCENT LIGHT FIXTURE
- EXISTING EXIT LIGHT
- OVERHEAD PROJECTOR AND MOUNT, SEE 18/A9.2
- NEW SUPPLY AIR REGISTER
- NEW RETURN AIR REGISTER

NOTE:

1. SEE ELECTRICAL DRAWINGS FOR LIGHTING PLANS
2. SEE MECHANICAL DRAWINGS PLAN
3. PATCH (E) CEILING GRID AND PANEL WHERE NEW CEILING SYSTEM TRANSISTIONS INTO EXISTING CEILING.

REVISION	DESCRIPTION	INITIAL	DATE
1	ADDENDUM NO. 1 145 AND 137		12.23.09
2	ADDENDUM NO. 2 145 AND 137		01.07.10
	ASI NO. 2 FIRST FLR MEN'S ROOM		05.07.10
3	ASI NO. 3 AV EQUIP. @ 137, 143, 145		05.20.10
4	RCP 04 MARKERBOARDS		05.20.10
5	RCP 10 ADD DOOR AT SQUAD RM.		09.28.10

ISSUED FOR PROGRESS REVIEW	
ISSUED FOR PLAN CHECK – DSA	07/01/09
ISSUED FOR PERMIT	
ISSUED FOR BID	11/18/09
ISSUED FOR CONSTRUCTION	

SEAL:

CONSULTANT:

INTERACTIVE RESOURCES
ARCHITECTURE • PLANNING • ENGINEERING
117 PARK PLACE
POINT RICHMOND
CALIFORNIA 94801
(510) 236-7435
(FAX) 232-5325
http://www.intres.com

PROJECT:

APPLIED ARTS REMODEL

CONTRA COSTA COLLEGE
2600 MISSION BELL DR.
SAN PABLO, CA.

CONTRA COSTA COMMUNITY COLLEGE DISTRICT

SHEET TITLE:

FIRST FLOOR REFLECTED CEILING PLAN

PROJ. NO.	2008-090.01
PREPARATION AND REVIEW	
DRAWN BY	MT
DESIGNER	GYN
PROJ. MGR.	GYN
PEER REVIEW	

SHEET NUMBER:

A2.3

NUMBER: OF:

C:\Users\Mike Moloney\Desktop\Contra Costa Fine Arts Remodel - CAD Work 5-11\CAD files\A2.3 FIRST FLOOR REFLECTED CEILING.dwg 6/17/2011 10:13 AM Mike Moloney

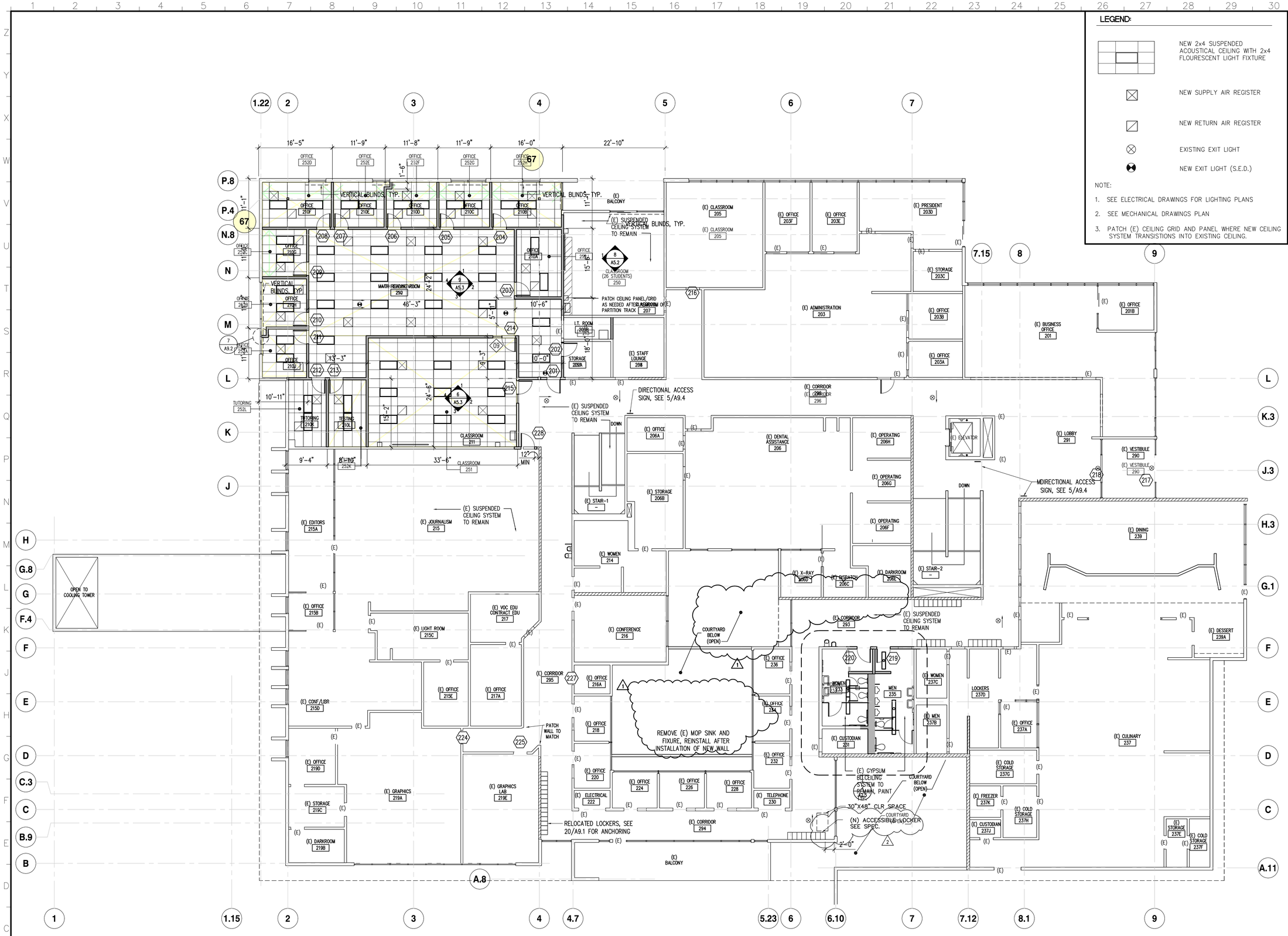
LEGEND:
NEW 2x4 SUSPENDED ACOUSTICAL CEILING WITH 2x4 FLOURESCENT LIGHT FIXTURE
NEW SUPPLY AIR REGISTER
NEW RETURN AIR REGISTER
EXISTING EXIT LIGHT
NEW EXIT LIGHT (S.E.D.)
NOTE:
1. SEE ELECTRICAL DRAWINGS FOR LIGHTING PLANS
2. SEE MECHANICAL DRAWINGS PLAN
3. PATCH (E) CEILING GRID AND PANEL WHERE NEW CEILING SYSTEM TRANSISTIONS INTO EXISTING CEILING.
MATH-READING/TUTORING 250
CLASSROOM (26 STUDENTS) 250
CLASSROOM 211
CLASSROOM 251
(E) ADMINISTRATION 203
(E) BUSINESS OFFICE 201
(E) CORRIDOR 298
(E) LOBBY 291
(E) DINING 239
(E) CULINARY 237
(E) CONFERENCE 216
(E) JOURNALISM 215
(E) GRAPHICS LAB 219E
(E) GRAPHICS 219A
(E) LIGHT ROOM 215C
(E) VOC EDU CONTRACT EDU 217
(E) CORRIDOR 293
(E) CORRIDOR 295
(E) CORRIDOR 294
(E) DENTAL ASSISTANCE 206
(E) WOMEN 214
(E) MEN 235
(E) WOMEN 237C
(E) MEN 237B
LOCKERS 237D
(E) CUSTODIAN 251
(E) CUSTODIAN 237J
(E) FREEZER 237K
(E) COLD STORAGE 237G
(E) COLD STORAGE 237H
(E) COLD STORAGE 237E
(E) COLD STORAGE 237F
(E) DESSERT 239A
(E) PRESIDENT 203D
(E) CLASSROOM 205
(E) OFFICE 203F
(E) OFFICE 203E
(E) STORAGE 203C
(E) OFFICE 203B
(E) OFFICE 203A
(E) OFFICE 201B
(E) OPERATING 206H
(E) OPERATING 206G
(E) OPERATING 206F
(E) X-RAY 206D
(E) DISPATCH 206C
(E) DARKROOM 206E
(E) STAIR-1
(E) STAIR-2
(E) ELEVATOR
(E) STORAGE 206B
(E) OFFICE 206A
(E) VESTIBULE 290
(E) VESTIBULE 290
(E) EDITORS 215A
(E) OFFICE 215B
(E) CONF/LIBR 215D
(E) OFFICE 215E
(E) OFFICE 217A
(E) OFFICE 219D
(E) STORAGE 219C
(E) DARKROOM 219B
(E) OFFICE 216A
(E) OFFICE 218
(E) OFFICE 220
(E) ELECTRICAL 222
(E) OFFICE 224
(E) OFFICE 226
(E) OFFICE 228
(E) TELEPHONE 230
(E) OFFICE 232
(E) OFFICE 234
(E) OFFICE 236
(E) STAIR-3
(E) STAIR-4
(E) STAIR-5
(E) STAIR-6
(E) STAIR-7
(E) STAIR-8
(E) STAIR-9
(E) STAIR-10
(E) STAIR-11
(E) STAIR-12
(E) STAIR-13
(E) STAIR-14
(E) STAIR-15
(E) STAIR-16
(E) STAIR-17
(E) STAIR-18
(E) STAIR-19
(E) STAIR-20
(E) STAIR-21
(E) STAIR-22
(E)

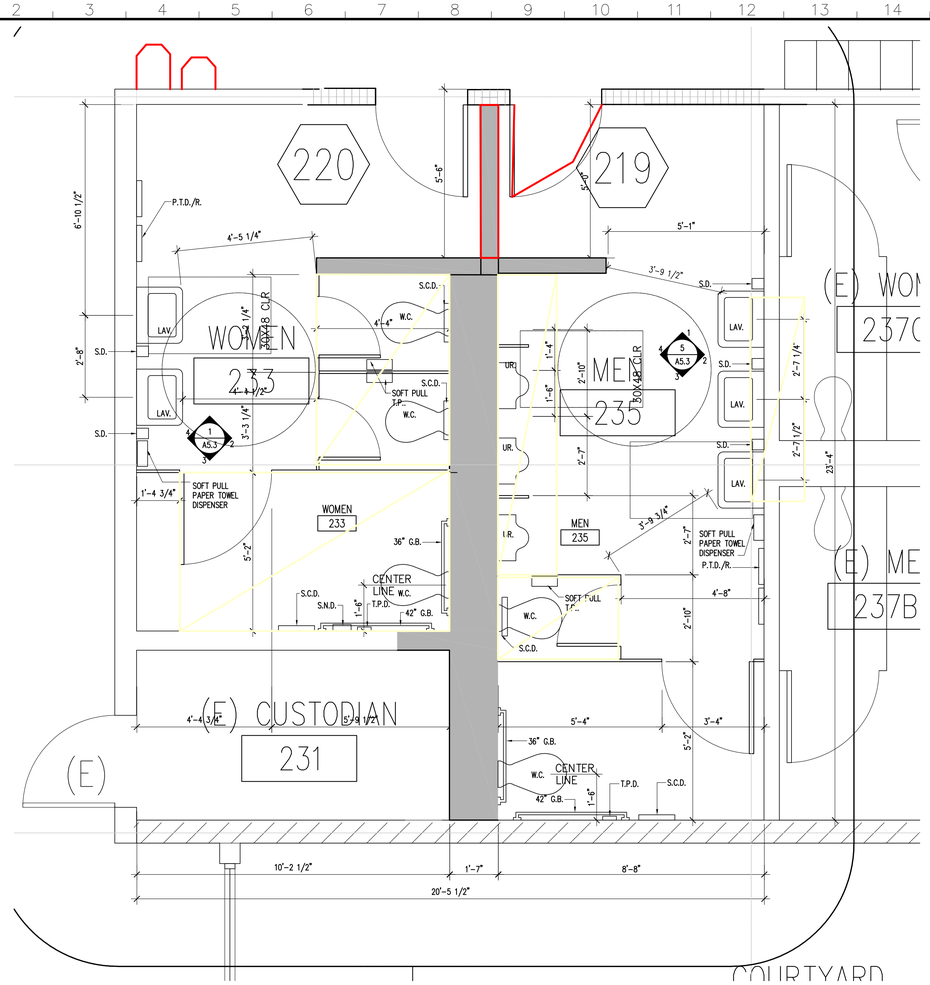

2 SECOND FLOOR - PARTIAL ENLARGED RESTROOMS

SCALE: 1/2"=1'-0"

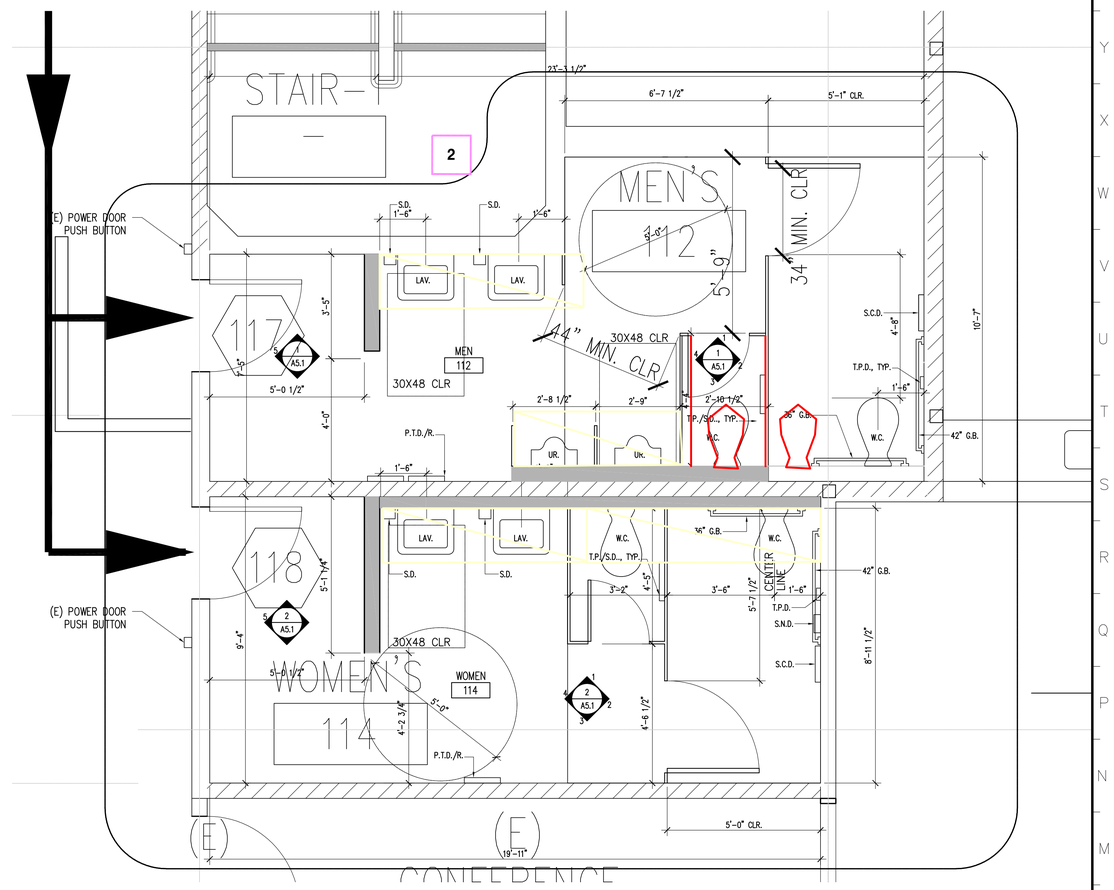

1 FIRST FLOOR - PARTIAL ENLARGED RESTROOMS

SCALE: 1/2"=1'-0"

LEGEND:

S.D.	SOAP DISPENSER
T.P.D.	TOILET PAPER DISPENSER
P.T.D./R.	COMBINATION PAPER TOWER DISPENCER/RECEPTACLE
T.P./S.C.D.	COMBINATION TOILE PAPER/SEAT COVER DISPENSER
S.C.D.	SEAT COVER DISPENSER
S.N.D.	SANITARY NAPKIN DISPOSAL
G.B.	GRAB BAR
LAV.	LAVATORY
W.C.	WATER CLOSET
UR.	URINAL

PROJECT RECORD DRAWINGS
6/16/2011
CONTRACTOR: JOHNSTONE MOYER INC.

REVISION	DESCRIPTION	INITIAL	DATE
1	ADDENDUM NO. 1 145 AND 137		12.23.09
2	ADDENDUM NO. 2 145 AND 137		01.07.10
	ASI NO. 2 FIRST FLR MEN'S ROOM		05.07.10
3	ASI NO. 3 AV EQUIP. @ 137, 143, 145		05.20.10
4	RCP 04 MARKERBOARDS		05.20.10
5	RCP 10 ADD DOOR AT SQUAD RM.		09.28.10

ISSUED FOR PROGRESS REVIEW	
ISSUED FOR PLAN CHECK – DSA	07/01/09
ISSUED FOR PERMIT	
ISSUED FOR BID	11/18/09
ISSUED FOR CONSTRUCTION	

SEAL:

CONSULTANT:

INTERACTIVE RESOURCES
ARCHITECTURE • PLANNING • ENGINEERING
117 PARK PLACE
POINT RICHMOND
CALIFORNIA 94801
(510) 236-7435
(FAX) 232-5325
http://www.intres.com

PROJECT:

APPLIED ARTS REMODEL

CONTRA COSTA COLLEGE
2600 MISSION BELL DR.
SAN PABLO, CA.

CONTRA COSTA COMMUNITY COLLEGE DISTRICT

SHEET TITLE:

PARTIAL ENLARGED FLOOR PLANS

PROJ. NO.	2008-090.01
	PREPARATION AND REVIEW
DRAWN BY	MT
DESIGNER	GYN
PROJ. MGR.	GYN
PEER REVIEW	

SHEET NUMBER:

A2.5

NUMBER: OF:

© \Users\Mike Mahoney\Desktop\Contra Costa Fine Arts Remodel – Old Work 5-11\CAD files\A2.5 enlarged plans.dwg 6/17/2011 10:22 AM Mike Mahoney

EQUIPMENT SCHEDULE: CONTRACTOR FURNISHED CONTRACTOR INSTALLED U.O.N.
SEE SHEET A2.7.1 FOR SPECIFICATIONS

1. WALL MOUNTED AV CABINET
2. AUDIO SYSTEM (SPEAKERS) @ +96" AFF
3. INFRASTRUCTURE HARDWARE & CABLES
4. DISPLAY DEVICE AND MOUNT
5. MANUAL PROJECTION SCREEN AND BRACKET
6. FLOOR MOUNTED AV CABINET
7. VIDEO SYSTEM
8. CONTROL SYSTEM
9. IT SERVER RACK (CONTRACTOR SHALL COORDINATE SEQUENCE OF EQUIPMENT CONNECT AND DISCONNECT WITH CAMPUS IT STAFF)



PROJECT RECORD DRAWINGS
6/16/2011
CONTRACTOR: JOHNSTONE MOYER INC.

20 **FIRST FLOOR PLAN**
SCALE: 1/8"=1'-0"

REFERENCE NORTH

REVISION	DESCRIPTION	INITIAL	DATE
1	ADDENDUM NO. 1 145 AND 137		12.23.09
2	ADDENDUM NO. 2 145 AND 137		01.07.10
	ASI NO. 2 FIRST FLR MEN'S ROOM		05.07.10
3	ASI NO. 3 AV EQUIP. @ 137, 143, 145		05.20.10
4	RCP 04 MARKERBOARDS		05.20.10
5	RCP 10 ADD DOOR AT SQUAD RM.		09.28.10

ISSUED FOR PROGRESS REVIEW	
ISSUED FOR PLAN CHECK – DSA	07/01/09
ISSUED FOR PERMIT	
ISSUED FOR BID	11/18/09
ISSUED FOR CONSTRUCTION	

SEAL:

CONSULTANT:

INTERACTIVE RESOURCES
ARCHITECTURE • PLANNING • ENGINEERING
117 PARK PLACE
POINT RICHMOND
CALIFORNIA 94801
(510) 236-7435
(FAX) 232-5325
http://www.intres.com

PROJECT:

APPLIED ARTS REMODEL

CONTRA COSTA COLLEGE
2600 MISSION BELL DR.
SAN PABLO, CA.

CONTRA COSTA COMMUNITY COLLEGE DISTRICT

SHEET TITLE:

FIRST FLOOR EQUIPMENT PLAN

PROJ. NO.	2008-090.01
PREPARATION AND REVIEW	
DRAWN BY	MT
DESIGNER	GYN
PROJ. MGR.	GYN
PEER REVIEW	

SHEET NUMBER:

A2.6

NUMBER: OF:

C:\Users\Mike Moloney\Desktop\Contra Costa Fine Arts Remodel - CAD Work 5-11\CAD files\A2.6 FIRST FLOOR EQUIP. PLAN.dwg 1/17/2011 10:17:27 AM Mike Moloney

SMART CLASSROOM AV EQUIPMENT SCHEDULE

EQUIPMENT ID.	DESCRIPTION	MANUFACTURER	PART NO.	CLASSROOM NO.: 113 (QTY.)	131 (QTY.)	133 (QTY.)	135 (QTY.)	137 (QTY.)	143 (QTY.)	145 (QTY.)	250 (QTY.)	251 (QTY.)	
DISPLAY DEVICE: 4	3000 LUMEN XGA PROJECTOR 1200X80	NEC	NP500W	1	1	1	1	1	1	1	1	1	
	PROJECTOR MOUNTING BRACKET	MONGER	MM-NEC	1	1	1	1	1	1	1	1	1	
	PROJECTOR LOCKING HOUSING	MONGER	MM-LB	1	1	1	1	1	1	1	1	1	
	LOCKING FORK	MONGER	MM-LF	1	1	1	1	1	1	1	1	1	
	CEILING KIT	MONGER	MMCMKP2	1	1	1	1	1	1	1	1	1	
	STRUT COVER	MONGER	MM-SC-2	1	1	1	1	1	1	1	1	1	
	PAD LOCK - SINGLE SHAFT	MASTERLOCK	-	1	1	1	1	1	1	1	1	1	
	PAD LOCK 4" U	MASTERLOCK	-	1	1	1	1	1	1	1	1	1	
PROJECTION SYSTEM: 5													
	MODEL C 60"X96" PROJECTION SCREEN	DA LITE	34730	1	1	1	1	1	1	1	1	1	
	FLOATING WALL MOUNT BRACKET	DA LITE	77027	1	1	1	1	1	1	1	1	1	
VIDEO SYSTEM: 7													
	DVD /VCR COMBINATION DECK	JVC	DRMV150S	1	1	1	1	1	1	1	1	1	
	1:2 COMPOSITE VIDEO DISTRIBUTION ARM	KRAMER	PT102VN	1	1	1	1	1	1	1	1	1	
AUDIO SYSTEM: 2	MICRO WORKS II	CAMBRIDGE	53CW0230AA00	1	1	1	1	1	1	1	1	1	
CONTROL SYSTEM: 8	WALL MOUNTED SYSTEM CONTROLLER	SP CONTROLS	PIXIE PRO	1	1	1	1	1	1	1	1	1	
	EMITTER	SP CONTROLS	PXE EMIT	1	1	1	1	1	1	1	1	1	
	SWITCHER SCALER IR	KRAMER	VP729	1	1	1	1	1	1	1	1	1	
	POWER CONDITIONER / SEQUENCER	FURMAN	PS8RII	1	1	1	1	1	1	1	1	1	
AV EQUIPMENT CABINET (WALL MTD.): 1	23.4"W X 17"D X 35.06"H, COLOR GRANITE GRAY	MIDDLE ATLANTIC	DWR-16-17GY	1	1	1	1	1	1	1	1	1	
	16RU PERFORATED DOOR	MIDDLE ATLANTIC	VFD-16GY	1	1	1	1	1	1	1	1	1	
	5.25" 3RU DVD/VCR SECURITY FACE PLATE, SILVER	MIDDLE ATLANTIC	RSH4C-JVCDRMV	1	1	1	1	1	1	1	1	1	
	5.25" 3RU DVD/VCR SECURITY FACE PLATE, SILVER	MIDDLE ATLANTIC	RSH4C-DELLSX	1	1	1	1	1	1	1	1	1	
	5.25" 3RU RACK METAL SHELF, BLACK	MIDDLE ATLANTIC	U3	1	1	1	1	1	1	1	1	1	
	5.25" 2RU VENTED BLANK PANEL, SILVER	MIDDLE ATLANTIC	CVTP-2	2	2	2	2	2	2	2	2	2	
	1.75" 1RU VENTED BLANK PANEL, SILVER	MIDDLE ATLANTIC	VT-1	1	1	1	1	1	1	1	1	1	
	5.25" 3RU SOLID METAL BLANK PANEL, SILVER	MIDDLE ATLANTIC	CHBL3	1	1	1	1	1	1	1	1	1	
	REAR RACK RAILS	MIDDLE ATLANTIC	DWR-RR16	1	1	1	1	1	1	1	1	1	
	LACE BARS	MIDDLE ATLANTIC	LBR-1R	1	1	1	1	1	1	1	1	1	
AV EQUIPMENT CABINET (FLR. MTD.): 6	23.4"W X 19.5"D X 31.5"H COLOR; BLACK	MIDDLE ATLANTIC	ERK1820				1						
	VENTED FRONT DOOR (25% SCREEN)	MIDDLE ATLANTIC	VFD-18				1						
	RACK RAILS	MIDDLE ATLANTIC	ERK-RR18				1						
	3RU COMPUTER SECURITY ENCLOSURE, BLACK	MIDDLE ATLANTIC	RSH4-DELL				1						
	3RU DVD/VCR SECURITY ENCLOSURE, BLACK	MIDDLE ATLANTIC	RSH4C-JVCDRMV				1						
	3RU VENTED PANEL	MIDDLE ATLANTIC	CVTP-3				1						
	1RU VENTED PANEL	MIDDLE ATLANTIC	VT-1				1						
	1RU VENTED SECURITY COVER	MIDDLE ATLANTIC	SF-1				1						
	2RU VENTED PANEL	MIDDLE ATLANTIC	CVTP-2				2						
	3RU RACK SHELF	MIDDLE ATLANTIC	U3				1						
	SOLID BLSANK PANEL	MIDDLE ATLANTIC	CHBL-3				1						
	LEVELING FEET	MIDDLE ATLANTIC	LF-ISO				1						
INFRASTRUCTURE HARDWARE & CABLES: 3													
	6' VGAM-M WITH AUDIO (LAPTOP/GUEST)	EXTRON	26-490-02	1	1	1	1	1	1	1	1	1	
	MAIN AV CUSTOM WALL PLATE 2 GANG	A/R	CUSTOM	1	1	1	1	1	1	1	1	1	
	AUXIIARY AV-1 GANG WALL PLATE	A/R	CUSTOM	1	1	1	1	1	1	1	1	1	
	MISCELLANEOUS CABLE AND CONNECTORS	A/R		1	1	1	1	1	1	1	1	1	

3 20 41 52

PROJECT RECORD DRAWINGS
6/16/2011
CONTRACTOR: JOHNSTONE MOYER INC.

REVISION	DESCRIPTION	INITIAL	DATE
1	ADDENDUM NO. 1 145 AND 137		12.23.09
2	ADDENDUM NO. 2 145 AND 137		01.07.10
	ASI NO. 2 FIRST FLR MEN'S ROOM		05.07.10
3	ASI NO. 3 AV EQUIP. @ 137, 143, 145		05.20.10
4	RCP 04 MARKERBOARDS		05.20.10
5	RCP 10 ADD DOOR AT SQUAD RM.		09.28.10

ISSUED FOR PROGRESS REVIEW	
ISSUED FOR PLAN CHECK - DSA	07/01/09
ISSUED FOR PERMIT	
ISSUED FOR BID	11/18/09
ISSUED FOR CONSTRUCTION	

SEAL:

CONSULTANT:

INTERACTIVE RESOURCES
ARCHITECTURE • PLANNING • ENGINEERING
117 PARK PLACE
POINT RICHMOND
CALIFORNIA 94801
(510) 236-7435
(FAX) 232-5325
http://www.intres.com

PROJECT:

APPLIED ARTS REMODEL

CONTRA COSTA COLLEGE
2600 MISSION BELL DR.
SAN PABLO, CA.

CONTRA COSTA COMMUNITY COLLEGE DISTRICT

SHEET TITLE:

SMART CLASSROOM AV EQUIPMENT SCHEDULE

PROJ. NO.	2008-090.01
PREPARATION AND REVIEW	
DRAWN BY	MT
DESIGNER	GYN
PROJ. MGR.	GYN
PEER REVIEW	

SHEET NUMBER:

A2.7.1

NUMBER: OF:

© Users\Mike Mahoney\Desktop\Contra Costa Fine Arts Remodel - CAD Work Sets\11\CAD Sheet\A2.7.1 AV EQUIPMENT SCHEDULE.dwg 6/17/2011 10:40 AM Mike Mahoney

EQUIPMENT SCHEDULE: CONTRACTOR FURNISHED CONTRACTOR INSTALLED U.O.N.
SEE SHEET A2.7.1 FOR SPECIFICATIONS

1. WALL MOUNTED AV CABINET
2. AUDIO SYSTEM (SPEAKERS) @ +96" AFF
3. INFRASTRUCTURE HARDWARE & CABLES
4. DISPLAY DEVICE AND MOUNT
5. MANUAL PROJECTION SCREEN AND BRACKET
6. FLOOR MOUNTED AV CABINET
7. VIDEO SYSTEM
8. CONTROL SYSTEM
9. IT SERVER RACK (CONTRACTOR SHALL COORDINATE SEQUENCE OF EQUIPMENT CONNECT AND DISCONNECT WITH CAMPUS IT STAFF)

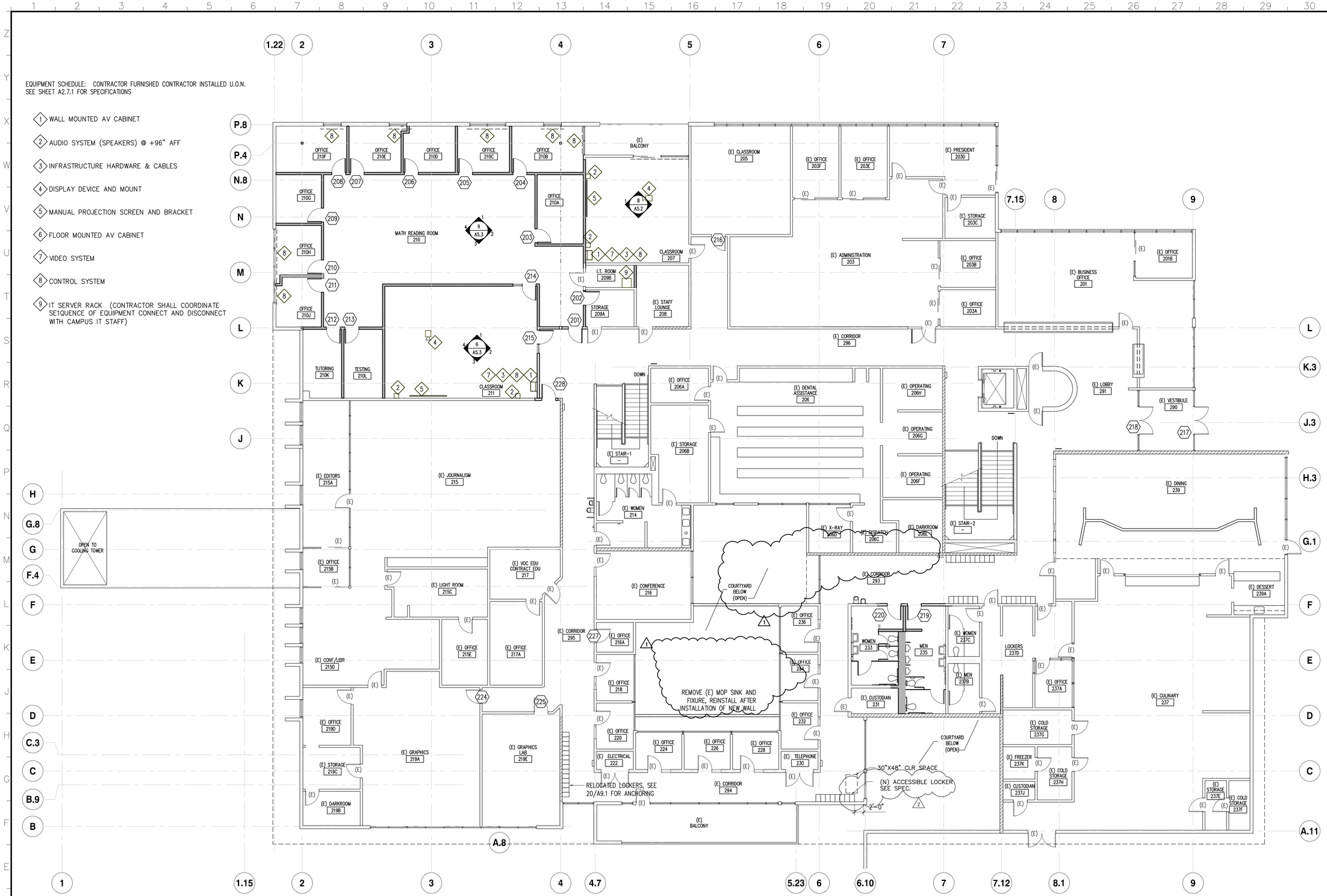

second floor

PROJECT RECORD DRAWINGS
6/16/2011
CONTRACTOR: JOHNSTONE MOYER INC.

20 SECOND FLOOR PLAN
SCALE: 1/8"=1'-0"

1" 0" 4' 8' 12' 16' 20'
1/8" =1'-0"

NORTH

REVISION	DESCRIPTION	INITIAL	DATE
1	ADDENDUM NO. 1 145 AND 137		12.23.09
2	ADDENDUM NO. 2 145 AND 137		01.07.10
	ASI NO. 2 FIRST FLR MEN'S ROOM		05.07.10
3	ASI NO. 3 AV EQUIP. @ 137, 143, 145		05.20.10
4	RCP 04 MARKERBOARDS		05.20.10
5	RCP 10 ADD DOOR AT SQUAD RM.		09.28.10

ISSUED FOR PROGRESS REVIEW	
ISSUED FOR PLAN CHECK – DSA	07/01/09
ISSUED FOR PERMIT	
ISSUED FOR BID	11/18/09
ISSUED FOR CONSTRUCTION	

SEAL:

CONSULTANT:

INTERACTIVE RESOURCES
ARCHITECTURE • PLANNING • ENGINEERING
117 PARK PLACE
POINT RICHMOND
CALIFORNIA 94801
(510) 236-7435
(FAX) 232-5325
http://www.intres.com

PROJECT:

APPLIED ARTS REMODEL

CONTRA COSTA COLLEGE
2600 MISSION BELL DR.
SAN PABLO, CA.

CONTRA COSTA COMMUNITY COLLEGE DISTRICT

SHEET TITLE:

SECOND FLOOR EQUIPMENT PLAN

PROJ. NO.	2008-090.01
	PREPARATION AND REVIEW
DRAWN BY	MT
DESIGNER	GYN
PROJ. MGR.	GYN
PEER REVIEW	

SHEET NUMBER:

A2.7

NUMBER: OF:

© \\pwr\Mike Mahoney\Desktop\Contra Costa Fine Arts Remodel - CCC Work Sets\PLA2.7 SECOND FLOOR EQUIP.rtd 6/17/2011 10:29 AM Mike Mahoney

FURNITURE RELOCATION NOTES:

THE KEYED NOTES BELOW IDENTIFIES EXISTING FURNITURE STORED IN THE HUMANITIES BUILDING. CONTRACTOR SHALL MOVE ALL FURNITURE TO DESIGNATED ROOMS AFTER COMLETION OF REMODEL WORK.

1. 20X31 TABLET ARM CHAIR
2. 66X24 TABLE
3. CHAIR
4. CONFERENCE ROOM TABLE
5. 36X30 COMPUTER DESK
6. 24X30 TABLET ARM CHAIR
7. 36x24 STUDENT DESK WITH CHAIR

PROJECT RECORD DRAWINGS
6/16/2011
CONTRACTOR: JOHNSTONE MOYER INC.

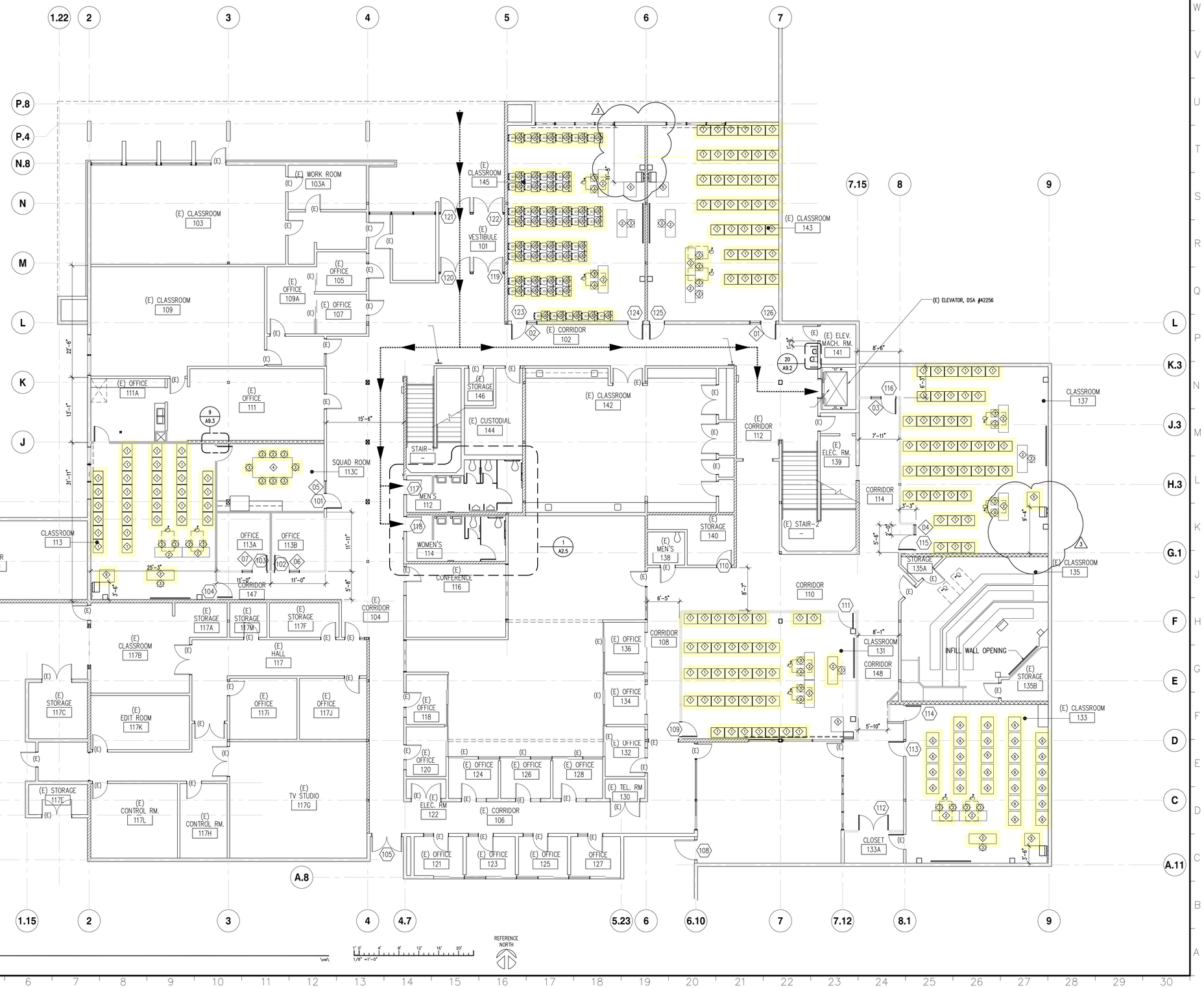

20 **FIRST FLOOR PLAN**
SCALE: 1/8"=1'-0"

1" 0" 4" 8" 12" 16" 20"
1/8" =1'-0"

REFERENCE NORTH

REVISION	DESCRIPTION	INITIAL	DATE
1	ADDENDUM NO. 1 145 AND 137		12.23.09
2	ADDENDUM NO. 2 145 AND 137		01.07.10
	ASI NO. 2 FIRST FLR MEN'S ROOM		05.07.10
3	ASI NO. 3 AV EQUIP. @ 137, 143, 145		05.20.10
4	RCP 04 MARKERBOARDS		05.20.10
5	RCP 10 ADD DOOR AT SQUAD RM.		09.28.10

ISSUED FOR PROGRESS REVIEW	
ISSUED FOR PLAN CHECK – DSA	07/01/09
ISSUED FOR PERMIT	
ISSUED FOR BID	11/18/09
ISSUED FOR CONSTRUCTION	

SEAL:

CONSULTANT:

INTERACTIVE RESOURCES
ARCHITECTURE • PLANNING • ENGINEERING
117 PARK PLACE
POINT RICHMOND
CALIFORNIA 94801
(510) 236-7435
(FAX) 232-5325
http://www.intres.com

PROJECT:

APPLIED ARTS REMODEL

CONTRA COSTA COLLEGE
2600 MISSION BELL DR.
SAN PABLO, CA.

CONTRA COSTA COMMUNITY COLLEGE DISTRICT

SHEET TITLE:

FIRST FLOOR FURNITURE RELOCATION PLAN

PROJ. NO.	2008-090.01
PREPARATION AND REVIEW	
DRAWN BY	MT
DESIGNER	GYN
PROJ. MGR.	GYN
PEER REVIEW	

SHEET NUMBER:

A2.8

NUMBER: OF:

C:\Users\Mike Moloney\Desktop\Contra Costa Fine Arts Remodel - CAD Work 5-11\CAD files\A2.8 FIRST FLOOR FURNITURE RELOCATION PLAN (REVISED).dwg 6/17/2011 10:41 AM Mike Moloney

FURNITURE RELOCATION NOTES:

THE KEYED NOTES BELOW IDENTIFIES EXISTING FURNITURE STORED IN THE HUMANITIES BUILDING. CONTRACTOR SHALL MOVE ALL FURNITURE TO DESIGNATED ROOMS AFTER COMLETION OF REMODEL WORK.

1. 20X31 TABLET ARM CHAIR
2. 66X24 TABLE
3. CHAIR
4. CONFERENCE ROOM TABLE
5. 36X30 COMPUTER DESK
6. 24X30 TABLET ARM CHAIR
7. 36x24 STUDENT DESK WITH CHAIR

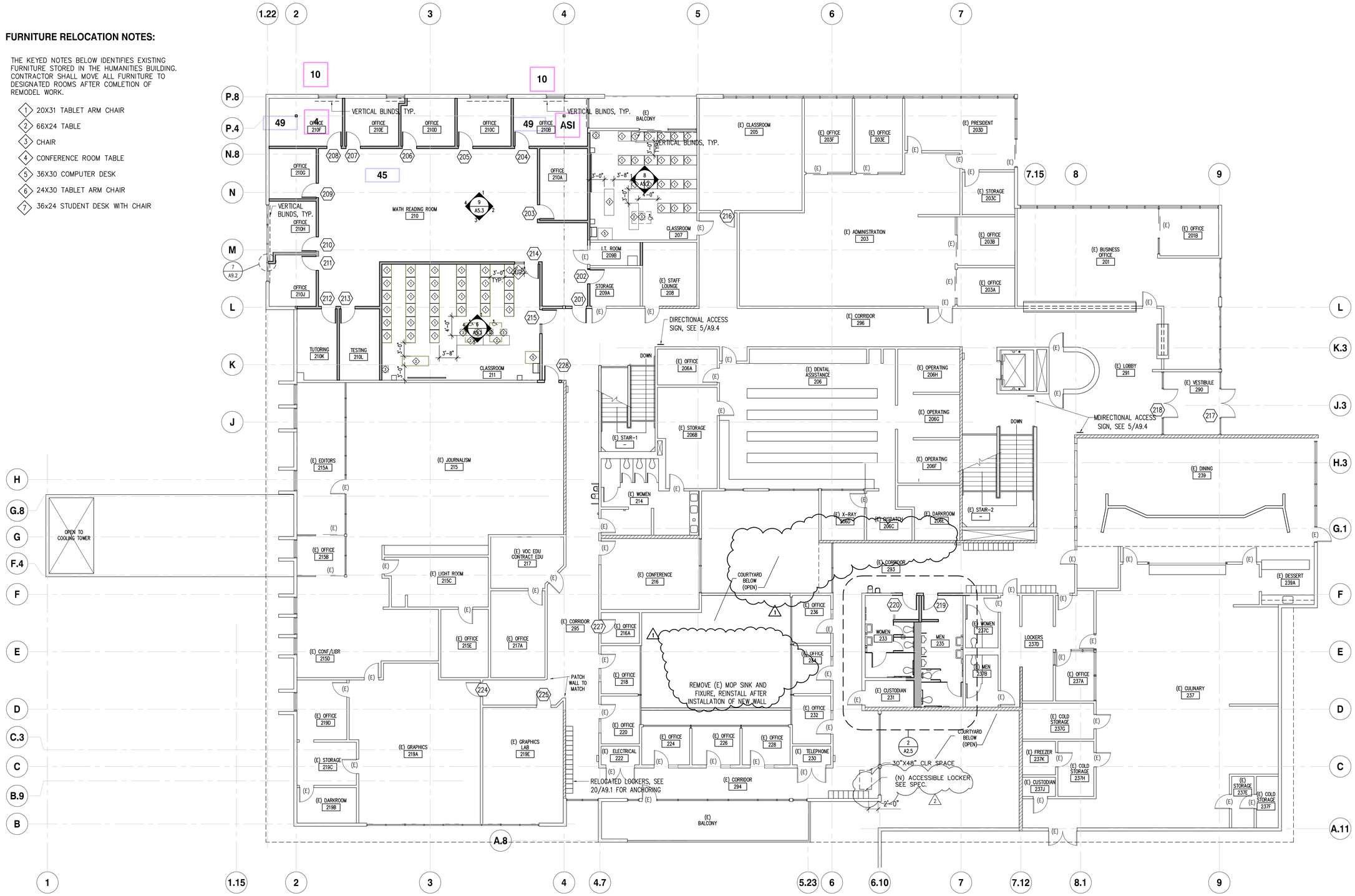

second floor

PROJECT RECORD DRAWINGS
6/16/2011
CONTRACTOR: JOHNSTONE MOYER INC.

20 **SECOND FLOOR PLAN**
SCALE: 1/8"=1'-0"

1' 0' 4' 8' 12' 16' 20'
1/8" =1'-0"

NORTH

REVISION	DESCRIPTION	INITIAL	DATE
1	ADDENDUM NO. 1 145 AND 137		12.23.09
2	ADDENDUM NO. 2 145 AND 137		01.07.10
	ASI NO. 2 FIRST FLR MEN'S ROOM		05.07.10
3	ASI NO. 3 AV EQUIP. @ 137, 143, 145		05.20.10
4	RCP 04 MARKERBOARDS		05.20.10
5	RCP 10 ADD DOOR AT SQUAD RM.		09.28.10

ISSUED FOR PROGRESS REVIEW	
ISSUED FOR PLAN CHECK – DSA	07/01/09
ISSUED FOR PERMIT	
ISSUED FOR BID	11/18/09
ISSUED FOR CONSTRUCTION	

SEAL:

CONSULTANT:

INTERACTIVE RESOURCES
ARCHITECTURE • PLANNING • ENGINEERING
117 PARK PLACE
POINT RICHMOND
CALIFORNIA 94801
(510) 236-7435
(FAX) 232-5325
http://www.intres.com

PROJECT:

APPLIED ARTS REMODEL

CONTRA COSTA COLLEGE
2600 MISSION BELL DR.
SAN PABLO, CA.

CONTRA COSTA COMMUNITY COLLEGE DISTRICT

SHEET TITLE:

SECOND FLOOR FURNITURE RELOCATION PLAN

PROJ. NO.	2008-090.01
	PREPARATION AND REVIEW
DRAWN BY	MT
DESIGNER	GYN
PROJ. MGR.	GYN
PEER REVIEW	

SHEET NUMBER:

A2.9

NUMBER: OF:

© \\pwfs\Mike Mahoney\Desktop\Contra Costa Fine Arts Remodel – CCC Work Sets\FINAL Work Sets\A2.9 SECOND FLOOR FURNITURE RELOCATION PLAN.dwg, 6/17/2011 10:43 AM, Mike Mahoney

ROOM FINISH SCHEDULE

	ROOM NO.	ROOM NAME	FLOOR		BASE		WAINSCOT	NORTH WALL		EAST WALL		SOUTH WALL		WEST WALL			CEILING		REMARKS
			MATERIAL	HT.	MATERIAL	HT.	MATERIAL	MATERIAL	FINISH	MATERIAL	FINISH	MATERIAL	FINISH	MATERIAL	FINISH	HT.	MATERIAL	FINISH	
FIRST FLOOR	108	(E) CORRIDOR	(E)	6"	RUBBER BASE TO MATCH (E)	–	–	–	–	TYPE 'X' GYP BD	PAINT	–	–	(E)	PAINT	(E) 9'-0"	(E) SUSPENDED CEILING	–	–
	110	(E) CORRIDOR	(E)	6"	RUBBER BASE TO MATCH (E)	–	–	–	–	–	PAINT	TYPE 'X' GYP BD	PAINT	(E)	PAINT	(E) 9'-0"	(E) SUSPENDED CEILING	–	–
	111A	(E) OFFICE	(E)	6"	RUBBER BASE TO MATCH (E)	–	–	(E)	–	(E)/PARTIAL GYP BD	PAINT	GYP BD	PAINT	(E)	PAINT	(E) 9'-0"	(E) SUSPENDED CEILING	–	–
	112	MEN'S	CERAMIC TILE	6"	CERAMIC TILE	5'-0"	CERAMIC TILE 1	GYP BD	CERAMIC TILE/PAINT	GYP BD	CERAMIC TILE/PAINT	GYP BD	CERAMIC TILE/PAINT	GYP BD	CERAMIC TILE/PAINT	(E) 9'-0"	(E) GYP BD	PAINT	–
	113	CLASSROOM	VCT	6"	RUBBER	–	–	(E) CONC. / GYP BD	PAINT	GYP BD	PAINT	(E)	PAINT	(E)	PAINT	(E) 9'-0"	SUSPENDED CEILING	–	–
	113A	OFFICE	VCT	6"	RUBBER	–	–	GYP BD	PAINT	GYP BD	PAINT	TYPE 'X' GYP BD	PAINT	GYP BD	PAINT	9'-0"	SUSPENDED CEILING	–	–
	113B	OFFICE	VCT	6"	RUBBER	–	–	GYP BD	PAINT	TYP 'X' GYP BD	PAINT	TYPE 'X' GYP BD	PAINT	GYP BD	PAINT	9'-0"	SUSPENDED CEILING	–	–
	113C	SQUAD ROOM	VCT	6"	RUBBER	–	–	(E)	PAINT	(E)	PAINT	GYP BD	PAINT	GYP BD	PAINT	9'-0"	SUSPENDED CEILING	–	–
	114	WOMEN'S	CERAMIC TILE	6"	CERAMIC TILE	5'-0"	CERAMIC TILE 1	GYP BD	CERAMIC TILE/PAINT	GYP BD	CERAMIC TILE/PAINT	GYP BD	CERAMIC TILE/PAINT	GYP BD	CERAMIC TILE/PAINT	(E) 9'-0"	(E) GYP BD	PAINT	–
	131	CLASSROOM	(E)	6"	RUBBER	–	–	TYPE 'X' GYP BD	PAINT	TYPE 'X' GYP BD	PAINT	(E)/(N) GYP BD	PAINT	TYPE 'X' GYP BD	PAINT	9'-0"	SUSPENDED CEILING	–	–
	137	CLASSROOM	VCT	6"	RUBBER	–	–	(E)	PAINT	(E)	PAINT	(E)	PAINT	TYPE 'X' GYP BD	PAINT	9'-0"	SUSPENDED CEILING	–	–
			22																
			1																
						–	–	–	–										
SECOND FLOOR	231	(E) CUSTODIAN	(E)	–	(E)	–	–	(E)/(N)-GYP BD	PAINT	GYP BD	PAINT	–	–	(E)	PAINT	9'-0"	(E) GYP. BD.	–	–
	233	WOMEN	CERAMIC TILE	6"	CERAMIC TILE	5'-0"	CERAMIC TILE 1	GYP BD	CERAMIC TILE/PAINT	GYP BD	CERAMIC TILE/PAINT	GYP BD	CERAMIC TILE/PAINT	GYP BD	CERAMIC TILE/PAINT	9'-0"	(E) GYP. BD.	PAINT	–
	235	MEN	CERAMIC TILE	6"	CERAMIC TILE	5'-0"	CERAMIC TILE	GYP BD	CERAMIC TILE/PAINT	GYP BD	CERAMIC TILE/PAINT	GYP BD	CERAMIC TILE/PAINT	GYP BD	CERAMIC TILE/PAINT	9'-0"	(E) GYP. BD.	PAINT	–
	250	CLASSROOM		6"	RUBBER	–	–	(E)	PAINT	(E)	PAINT	(E)	PAINT	GYP BD	PAINT	9'-0"	SUSPENDED CEILING	–	–
	251	CLASSROOM		6"	RUBBER	–	–	GYP BD	PAINT	GYP BD	PAINT	(E)	PAINT	GYP BD	PAINT	9'-0"	SUSPENDED CEILING	–	–
	252	MATH DEPARTMENT	VCT	6"	RUBBER	–	–	GYP BD	PAINT	GYP BD	PAINT	GYP BD	PAINT	GYP BD	PAINT	9'-0"	SUSPENDED CEILING	–	–
	252A	OFFICE	VCT	6"	RUBBER	–	–	GYP BD	PAINT	GYP BD	PAINT	GYP BD	PAINT	(E) GYP BD	PAINT	9'-0"	SUSPENDED CEILING	–	–
	252B	OFFICE	VCT	6"	RUBBER	–	–	GYP BD	PAINT	GYP BD	PAINT	GYP BD	PAINT	(E) GYP BD	PAINT	9'-0"	SUSPENDED CEILING	–	–
	252C	OFFICE	VCT	6"	RUBBER	–	–	GYP BD	PAINT	GYP BD	PAINT	GYP BD	PAINT	(E) GYP BD	PAINT	9'-0"	SUSPENDED CEILING	–	–
	252D	OFFICE	VCT	6"	RUBBER	–	–	(E) GYP BD	PAINT	GYP BD	PAINT	GYP BD	PAINT	(E) GYP BD	PAINT	9'-0"	SUSPENDED CEILING	–	–
	252E	OFFICE	VCT	6"	RUBBER	–	–	(E) GYP BD	PAINT	GYP BD	PAINT	GYP BD	PAINT	GYP BD	PAINT	9'-0"	SUSPENDED CEILING	–	–
	252F	OFFICE	VCT	6"	RUBBER	–	–	(E) GYP BD	PAINT	GYP BD	PAINT	GYP BD	PAINT	GYP BD	PAINT	9'-0"	SUSPENDED CEILING	–	–
	252G	OFFICE	VCT	6"	RUBBER	–	–	(E) GYP BD	PAINT	GYP BD	PAINT	GYP BD	PAINT	GYP BD	PAINT	9'-0"	SUSPENDED CEILING	–	–
	252H	OFFICE	VCT	6"	RUBBER	–	–	(E) GYP BD	PAINT	GYP BD	PAINT	GYP BD	PAINT	GYP BD	PAINT	9'-0"	SUSPENDED CEILING	–	–
	252J	OFFICE	VCT	6"	RUBBER	–	–	GYP BD	PAINT	GYP BD	PAINT	GYP BD	PAINT	GYP BD	PAINT	9'-0"	SUSPENDED CEILING	–	–
	252K	TESTING	VCT	6"	RUBBER	–	–	GYP BD	PAINT	GYP BD	PAINT	GYP BD	PAINT	GYP BD	PAINT	9'-0"	SUSPENDED CEILING	–	–
	252L	TUTORING	VCT	6"	RUBBER	–	–	GYP BD	PAINT	GYP BD	PAINT	(E)/(N) GYP BD	PAINT	(E) GYP BD	PAINT	9'-0"	SUSPENDED CEILING	–	–
	253	STORAGE	VCT	6"	RUBBER	–	–	(E) GYP BD	PAINT	(E) GYP BD	PAINT	(E) GYP BD	PAINT	GYP BD	PAINT	9'-0"	(E) GYP. BD.	–	–
	254	(E) STAFF LOUNGE	(E)	–	–	–	–	(E) GYP BD	PAINT	(E) GYP BD	PAINT	(E) GYP BD	PAINT	(E)/(N) GYP BD	PAINT	9'-0"	(E) GYP. BD.	–	–
	293	(E) CORRIDOR	(E)	6"	RUBBER	–	–	–	–	PARTIAL TYPE 'X' GYP BD	PAINT	PARTIAL TYPE 'X' GYP BD	PAINT	PARTIAL TYPE 'X' GYP BD	PAINT	9'-0"	(E) SUSPENDED CEILING	–	–
	296	(E) CORRIDOR	(E)	6"	TO MATCH (E)	–	–	(E)/(N) GYP BD	PAINT	–	–	(E)	PAINT	GYP BD	PAINT	9'-0"	(E) SUSPENDED CEILING	–	–

PROJECT RECORD DRAWINGS
6/16/2011
CONTRACTOR: JOHNSTONE MOYER INC.

REVISION	DESCRIPTION	INITIAL	DATE
1	ADDENDUM NO. 1 145 AND 137		12.23.09
2	ADDENDUM NO. 2 145 AND 137		01.07.10
	ASI NO. 2 FIRST FLR MEN'S ROOM		05.07.10
3	ASI NO. 3 AV EQUIP. @ 137, 143, 145		05.20.10
4	RCP 04 MARKERBOARDS		05.20.10
5	RCP 10 ADD DOOR AT SQUAD RM.		09.28.10

ISSUED FOR PROGRESS REVIEW	
ISSUED FOR PLAN CHECK – DSA	07/01/09
ISSUED FOR PERMIT	
ISSUED FOR BID	11/18/09
ISSUED FOR CONSTRUCTION	

SEAL:

CONSULTANT:

INTERACTIVE RESOURCES
ARCHITECTURE • PLANNING • ENGINEERING
117 PARK PLACE
POINT RICHMOND
CALIFORNIA 94801
(510) 236-7435
(FAX) 232-5325
http//www.intres.com

PROJECT:

APPLIED ARTS REMODEL

CONTRA COSTA COLLEGE
2600 MISSION BELL DR.
SAN PABLO, CA.

CONTRA COSTA COMMUNITY COLLEGE DISTRICT

SHEET TITLE:

FINISH SCHEDULE

PROJ. NO.	2008-090.01
	PREPARATION AND REVIEW
DRAWN BY	MT
DESIGNER	GYN
PROJ. MGR.	GYN
PEER REVIEW	

SHEET NUMBER:

A4.1

NUMBER: OF:

© Interactive Resources, Inc. Architecture • Planning • Engineering

C:\Users\Alex McKenney\Desktop\Contra Costa Fine Arts Remodel - CAD Work 5-11\CAD files\A4.1 FINISH SCHEDULE.dwg 6/17/2011 10:45 AM Alex McKenney

DOOR SCHEDULE

	MARK	TYPE	SIZE	THICK-NESS	MATERIAL	FINISH	FRAME MATL.	FRAME FINISH	FRAME HEAD	FRAME JAMB	FRAME SILL	FIRE RATING	GLASS	REMARKS
FIRST FLOOR	101	C	3'-0" x 7'-0"	1 3/4"	SOLID CORE WOOD	TRANSPARENT FACTORY FINISHED	H.M.	PAINT	x/A9.x SIM	x/A9.x	–	20 MIN	WIRE	– 101
	102	C	3'-0" x 7'-0"	1 3/4"	SOLID CORE WOOD	TRANSPARENT FACTORY FINISHED	H.M.	PAINT	x/A9.x SIM	x/A9.x	–	20 MIN	WIRE	– 102
	103	C	3'-0" x 7'-0"	1 3/4"	SOLID CORE WOOD	TRANSPARENT FACTORY FINISHED	H.M.	PAINT	x/A9.x SIM	x/A9.x	–	20 MIN	WIRE	– 103
	104	B	3'-0" x 7'-0"	1 3/4"	SOLID CORE WOOD	TRANSPARENT FACTORY FINISHED	H.M.	PAINT	x/A9.x SIM	x/A9.x	–	20 MIN	WIRE	– 104
	105	(E)	(E) PAIR 3'-0" x 7'-0"	–	(E)	(E)	(E)	–	–	–	–	–	–	(E) EGRESS DOOR 105
	106	B	3'-0" x 7'-0"	1 3/4"	SOLID CORE WOOD	TRANSPARENT FACTORY FINISHED	H.M.	PAINT						
	107	A	3'-0" x 7'-0"	1 3/4"	SOLID CORE WOOD	TRANSPARENT FACTORY FINISHED	H.M.	PAINT						
	108	(E)	3'-0" x 7'-0"	–	(E)	(E)	(E)	–	–	–	–	–	–	(E) EGRESS DOOR 108
	109	B	3'-0" x 7'-0"	1 3/4"	SOLID CORE WOOD	TRANSPARENT FACTORY FINISHED	H.M.	PAINT	x/A9.x SIM	x/A9.x	–	20 MIN	–	– 109
	110	(E)	3'-0" x 7'-0"	–	(E)	(E)	(E)	–	–	–	–	(E) 20 MIN	–	– 110
	111	B	3'-0" x 7'-0"	1 3/4"	SOLID CORE WOOD	TRANSPARENT FACTORY FINISHED	H.M.	PAINT	x/A9.x SIM	x/A9.x	–	20 MIN	–	– 111
	112	A	PAIR 3'-0" x 7'-0"	1 3/4"	SOLID CORE WOOD	TRANSPARENT FACTORY FINISHED	H.M.	PAINT	x/A9.x SIM	x/A9.x	–	20 MIN	–	– 112
	113	B	3'-0" x 7'-0"	1 3/4"	SOLID CORE WOOD	TRANSPARENT FACTORY FINISHED	H.M.	PAINT	x/A9.x SIM	x/A9.x	–	20 MIN	–	– 113
	114	A	3'-0" x 7'-0"	1 3/4"	SOLID CORE WOOD	TRANSPARENT FACTORY FINISHED	H.M.	PAINT	x/A9.x SIM	x/A9.x	–	–	–	– 114
	115	C	3'-0" x 7'-0"	1 3/4"	SOLID CORE WOOD	TRANSPARENT FACTORY FINISHED	H.M.	PAINT	x/A9.x SIM	x/A9.x	–	20 MIN	WIRE	– 115
	116	C	3'-0" x 7'-0"	1 3/4"	SOLID CORE WOOD	TRANSPARENT FACTORY FINISHED	H.M.	PAINT	x/A9.x SIM	x/A9.x	–	20 MIN	WIRE	– 116
	117	(E)	3'-0" x 7'-0"	–	(E)	(E)	(E)	–	–	–	–	20 MIN		117
	118	(E)	3'-0" x 7'-0"	–	(E)	(E)	(E)	–	–	–	–	20 MIN		118
	119	(E)	(E) PAIR 3'-0" x 7'-0"	–	(E)	(E)	(E)	–	–	–	–	–	–	(E) EGRESS DOOR 119
	120	(E)	(E) PAIR 3'-0" x 7'-0"	–	(E)	(E)	(E)	–	–	–	–	–	–	(E) EGRESS DOOR 120
	121	(E)	(E) PAIR 3'-0" x 7'-0"	–	(E)	(E)	(E)	–	–	–	–	–	–	(E) EGRESS DOOR 121
	122	(E)	(E) PAIR 3'-0" x 7'-0"	–	(E)	(E)	(E)	–	–	–	–	–	–	(E) EGRESS DOOR 122
	123	B	3'-0" x 7'-0"	1 3/4"	SOLID CORE WOOD	TRANSPARENT FACTORY FINISHED	H.M.	PAINT	x/A9.x SIM	x/A9.x	–	20 MIN	–	– 123
	124	B	3'-0" x 7'-0"	1 3/4"	SOLID CORE WOOD	TRANSPARENT FACTORY FINISHED	H.M.	PAINT	x/A9.x SIM	x/A9.x	–	20 MIN	–	– 124
	125	B	3'-0" x 7'-0"	1 3/4"	SOLID CORE WOOD	TRANSPARENT FACTORY FINISHED	H.M.	PAINT	x/A9.x SIM	x/A9.x	–	20 MIN	–	– 125
	126	B	3'-0" x 7'-0"	1 3/4"	SOLID CORE WOOD	TRANSPARENT FACTORY FINISHED	H.M.	PAINT	x/A9.x SIM	x/A9.x	–	20 MIN	–	– 126
SECOND FLOOR	201	B	3'-0" x 7'-0"	1 3/4"	SOLID CORE WOOD	TRANSPARENT FACTORY FINISHED	H.M.	PAINT	x/A9.x SIM	x/A9.x	–	20 MIN	WIRE	201
	202	A	3'-0" x 7'-0"	1 3/4"	SOLID CORE WOOD	TRANSPARENT FACTORY FINISHED	H.M.	PAINT	x/A9.x SIM	x/A9.x	–	–	–	202
	203	D	3'-0" x 7'-0"	1 3/4"	SOLID CORE WOOD	TRANSPARENT FACTORY FINISHED	H.M.	PAINT	x/A9.x SIM	x/A9.x	–	–	TEMPERED	203
	204	D	3'-0" x 7'-0"	1 3/4"	SOLID CORE WOOD	TRANSPARENT FACTORY FINISHED	H.M.	PAINT	x/A9.x SIM	x/A9.x	–	–	TEMPERED	204
	205	D	3'-0" x 7'-0"	1 3/4"	SOLID CORE WOOD	TRANSPARENT FACTORY FINISHED	H.M.	PAINT	x/A9.x SIM	x/A9.x	–	–	TEMPERED	205
	206	D	3'-0" x 7'-0"	1 3/4"	SOLID CORE WOOD	TRANSPARENT FACTORY FINISHED	H.M.	PAINT	x/A9.x SIM	x/A9.x	–	–	TEMPERED	206
	207	D	3'-0" x 7'-0"	1 3/4"	SOLID CORE WOOD	TRANSPARENT FACTORY FINISHED	H.M.	PAINT	x/A9.x SIM	x/A9.x	–	–	TEMPERED	207
	208	D	3'-0" x 7'-0"	1 3/4"	SOLID CORE WOOD	TRANSPARENT FACTORY FINISHED	H.M.	PAINT	x/A9.x SIM	x/A9.x	–	–	TEMPERED	208
	209	D	3'-0" x 7'-0"	1 3/4"	SOLID CORE WOOD	TRANSPARENT FACTORY FINISHED	H.M.	PAINT	x/A9.x SIM	x/A9.x	–	–	TEMPERED	209
	210	D	3'-0" x 7'-0"	1 3/4"	SOLID CORE WOOD	TRANSPARENT FACTORY FINISHED	H.M.	PAINT	x/A9.x SIM	x/A9.x	–	–	TEMPERED	210
	211	D	3'-0" x 7'-0"	1 3/4"	SOLID CORE WOOD	TRANSPARENT FACTORY FINISHED	H.M.	PAINT	x/A9.x SIM	x/A9.x	–	–	TEMPERED	211
	212	D	3'-0" x 7'-0"	1 3/4"	SOLID CORE WOOD	TRANSPARENT FACTORY FINISHED	H.M.	PAINT	x/A9.x SIM	x/A9.x	–	–	TEMPERED	212
	213	D	3'-0" x 7'-0"	1 3/4"	SOLID CORE WOOD	TRANSPARENT FACTORY FINISHED	H.M.	PAINT	x/A9.x SIM	x/A9.x	–	–	TEMPERED	213
	214	C	3'-0" x 7'-0"	1 3/4"	SOLID CORE WOOD	TRANSPARENT FACTORY FINISHED	H.M.	PAINT	x/A9.x SIM	x/A9.x	–	–	TEMPERED	214
	215	C	3'-0" x 7'-0"	1 3/4"	SOLID CORE WOOD	TRANSPARENT FACTORY FINISHED	H.M.	PAINT	x/A9.x SIM	x/A9.x	–	20 MIN	WIRE	– 215
	216	(E)	3'-0" x 7'-0"	–	(E)	(E)	(E)	PAINT	–	–	–	(E) 20 MIN	–	REMOVE (E) KNOB HANDLE 216
	217	(E)	(E) PAIR 3'-0" x 7'-0"	–	(E)	(E)	(E)	–	–	–	–	–	–	(E) EGRESS DOOR 217
	218	(E)	(E) PAIR 3'-0" x 7'-0"	–	(E)	(E)	(E)	–	–	–	–	–	–	(E) EGRESS DOOR 218
	219	A	3'-0" x 7'-0"	1 3/4"	SOLID CORE WOOD	TRANSPARENT FACTORY FINISHED	H.M.	PAINT	x/A9.x SIM	x/A9.x	–	20 MIN	–	219
	220	A	3'-0" x 7'-0"	1 3/4"	SOLID CORE WOOD	TRANSPARENT FACTORY FINISHED	H.M.	PAINT	x/A9.x SIM	x/A9.x	–	20 MIN	–	220
	221	NOT USED												
	222	NOT USED												
	223	NOT USED												
	224	(E)	3'-0" x 7'-0"	–	(E)	(E)	(E)	–	–	–	–	–	–	REMOVE (E) KNOB HANDLE 224
	225	NOT USED												225
	226	NOT USED												226
	227	(E)	3'-0" x 7'-0"	–	(E)	(E)	(E)	–	–	–	–	(E) 20 MIN	–	REMOVE (E) KNOB HANDLE 227
	228	(E)	3'-0" x 7'-0"	–	(E)	(E)	(E)	–	–	–	–	(E) 20 MIN	–	REMOVE & REINSTALL (E) DOOR & FRAME 227

HARDWARE SCHEDULE

MARK	HANG DOOR	SECURE DOOR INACTIVE LEAF	SECURE DOOR ACTIVE LEAF	PUSH/PULL	ACCESSORIES (PAIRS)	CLOSE DOOR	PROTECT DOOR	STOP/HOLDER	WEATHER-STRIPPING PERIMETER	WEATHER-STRIPPING SILL	WEATHER-STRIPPING HEAD	THRESHOLD	OTHER HARDWARE/REMARKS
101	BB1168	–	CL3355	–	–	4040	KICK	GJ104S	–	–	–	–	
102	BB1279	–	CL3355	–	–	4040	KICK	408	–	–	–	–	
103	BB1279	–	CL3355	–	–	4040	KICK	408	–	–	–	–	
104	BB1168	–	CL3355	–	–	4040	KICK	408	–	–	–	–	
105	(E)	(E) PANIC	(E) PANIC	–	–	(E)	–	(E)	–	–	–	(2)	(7)
106	BB1279	–	CL3355				KICK	408					
107	BB1279	–	CL3355				KICK	408					
108	(E)	(E) PANIC	(E) PANIC	–	–	(E)	–	(E)	–	–	–	(2)	
109	BB1168	–	CL3355	–	–	4040	–	408	–	–	–	–	
110	(E)	–	(E)	–	–	(E)	–	(E)	–	–	–	–	
111	BB1168	–	CL3355	–	–	4040	KICK	408	–	–	–	–	
112	BB1168	FB358	CL3357	–	–	4040	KICK	GJ104S	–	–	–	–	
113	BB1168	–	CL3355	–	–	4040	KICK	GJ104S	–	–	–	–	
114	1279	–	CL3357	–	–	–	–	408	–	–	–	–	
115	BB1168	–	99L–F	–	–	4040	KICK	408	–	–	–	–	(7)
116	BB1168	–	99L–F	–	–	4040	KICK	408	–	–	–	–	(7)
117	(E)		(E)			(E)	(E)	(E)	–	–	–	(2)	(1) (3) (5)
118	(E)		(E)			(E)	(E)	(E)	–	–	–	(2)	(1) (4) (6)
119	(E)	(E) PANIC	(E) PANIC	–	–	(E)	–	(E)	–	–	–	(2)	(1) (7)
120	(E)	(E) PANIC	(E) PANIC	–	–	(E)	–	(E)	–	–		(2)	(7)
121	(E)	(E) PANIC	(E) PANIC	–	–	(E)	–	(E)	–	–	–	(2)	(7)
122	(E)	(E) PANIC	(E) PANIC	–	–	(E)	–	(E)	–	–	–	(2)	(1) (7)
123	BB1168	–	99L–F	–	–	4040	KICK	GJ104S	–	–	–		
124	BB1168	–	99L–F	–	–	4040	KICK	GJ104S	–	–	–	–	
125	BB1168	–	99L–F	–	–	4040	KICK	GJ104S	–	–	–	–	
126	BB1168	–	99L–F	–	–	4040	KICK	GJ104S	–	–	–	–	
201	BB1168	–	CL3355	–	–	4040	KICK	GJ104S	–	–	–	–	
202	1279	–	CL3357	–	–	–	KICK	408	–	–	–	–	
203	BB1191	–	CL3355	–	–	–	KICK	408	–	–	–	–	
204	BB1191	–	CL3355	–	–	–	KICK	408	–	–	–	–	
205	BB1191	–	CL3355	–	–	–	KICK	408	–	–	–	–	
206	BB1191	–	CL3355	–	–	–	KICK	408	–	–	–	–	
207	BB1191	–	CL3355	–	–	–	KICK	408	–	–	–	–	
208	BB1191	–	CL3355	–	–	–	KICK	408	–	–	–	–	
209	BB1191	–	CL3355	–	–	–	KICK	408	–	–	–	–	
210	BB1191	–	CL3355	–	–	–	KICK	408	–	–	–	–	
211	BB1191	–	CL3355	–	–	–	KICK	408	–	–	–	–	
212	BB1191	–	CL3355	–	–	–	KICK	408	–	–	–	–	
213	BB1191	–	CL3355	–	–	–	KICK	408	–	–	–	–	
214	BB1168	–	CL3355	–	–	4040	KICK	408	–	–	–	–	
215	BB1168	–	CL3355	–	–	4040	KICK	408	–	–	–	–	
216	BB1168	–	CL3355	–	–	4040	KICK	408	–	–	–	–	
217	(E)	(E) PANIC	(E) PANIC	–	–	(E)	–	(E)	–	–	–	(2)	(7)
218	(E)	(E) PANIC	(E) PANIC	–	–	(E)	–	(E)	–	–	–	(2)	(2)
219	BB1168	–	CL3310	–	–	4040	KICK	408	–	–	–	–	(3) (5)
220	BB1168	–	CL3310	–	–	4040	KICK	408	–	–	–	–	(4) (6)
221													
222													
223													
224	(E)	–	CL3355	–	–	–	–	(E)	–	–	–	–	
225													
226													
227	(E)	–	CL3355	–	–	(E)	–	(E)	–	–	–	–	
228	(E)	–	(E)	–	–	(E)	–	(E)	–	–	–	–	

DOOR TYPE:

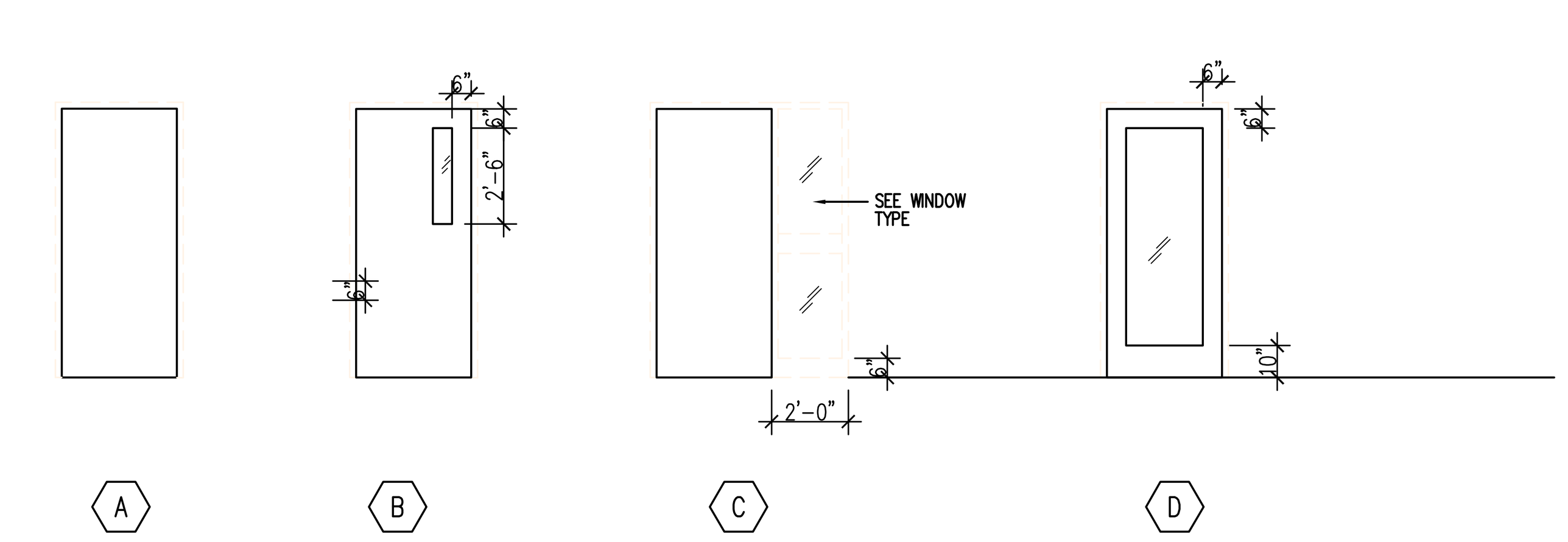

PROJECT RECORD DRAWINGS
6/16/2011
CONTRACTOR: JOHNSTONE MOYER INC.

SIGNAGE AND HARDWARE NOTES:

1. EXISTING AUTOMATIC DOOR OPERATOR INSTALLED AS PART OF DSA # 59314.
2. EXISTING ACCESSIBLE THRESHOLD.
3. INSTALL NEW MEN'S TOILET ROOM SIGN AT STRIKE SIDE OF DOOR. SEE 6/A9.4.
4. INSTALL NEW WOMEN'S TOILET ROOM SIGN AT STRIKE SIDE OF DOOR. SEE 5/A9.4.
5. EXISTING MEN'S TOILET ROOM DOOR SIGN. SEE 8/A9/4.
6. EXISTING WOMEN'S TOILET ROOJM DOOR SIGN. SEE 9/A9.4.
7. INSTALL NEW EXIT EXIT SIGN. SEE 10/A.94

12

SHEET NOTES FOR HARDWARE/DOOR

1. NUMBERS USED IN THE ABOVE SCHEDULE ARE TAKEN FROM THE CATALOGS OF THE FOLLOWING MANUFACTURERS EXCEPT AS OTHERWISE NOTED:

CONT HINGE:	HAGER FULL SURFACE STAINLESS STEEL CONTINUOUS HINGE
HINGE:	HAGER
LOCKSETS:	CORBIN RUSSWIN, NO SUBSTITUTION ALLOWED (FINISH; 613 OIL RUBBED BRONZE)
FLUSH BOLTS:	IVES
CLOSER:	LCN, U.O.N.
EXIT DEVICE:	VON DUPRIN
KICK PLATES:	TRIMCO
STOPS:	IVES OR GLYNN–JOHNSON WHEN PREFIXED AS "GJ"
REMOVABLE MULLION:	VON DUPRIN

4

WINDOW SCHEDULE

WINDOW TYPE:

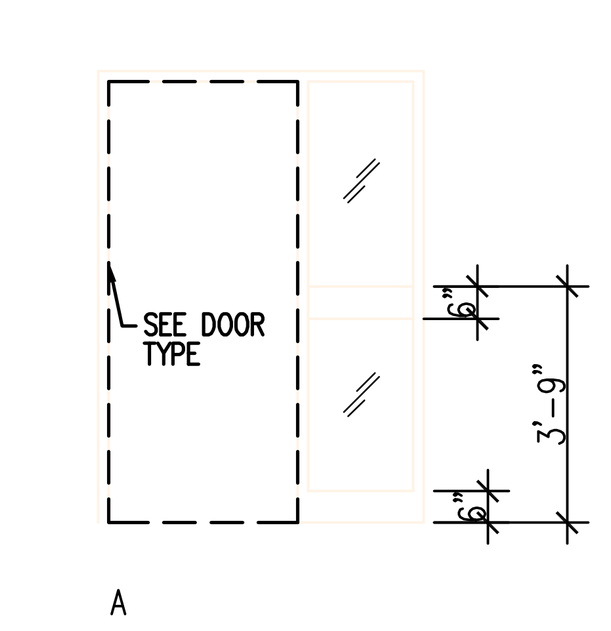

MARK	TYPE	FRAME	SIZE	GLASS	FIRE
01	A	H.M.	2'-6" X 7'-0"	WIRED	45 MIN.
02	A	H.M.	2'-6" X 7'-0"	WIRED	45 MIN.
03	A	H.M.	2'-0 ' X 7'-0'	WIRED	45 MIN.
04	A	H.M.	2'-0 ' X 7'-0'	WIRED	45 MIN.
05	A	H.M.	2'-0 ' X 7'-0'	WIRED	45 MIN.
06	A	H.M.	2'-0 ' X 7'-0'	WIRED	45 MIN.
07	A	H.M.	2'-0 ' X 7'-0'	WIRED	45 MIN.
08	NOT USED				
09	A	H.M.	2'-0 ' X 7'-0'	WIRED	45 MIN.

REVISION	DESCRIPTION	INITIAL	DATE
1	ADDENDUM NO. 1 145 AND 137		12.23.09
2	ADDENDUM NO. 2 145 AND 137		01.07.10
	ASI NO. 2 FIRST FLR MEN'S ROOM		05.07.10
3	ASI NO. 3 AV EQUIP. @ 137, 143, 145		05.20.10
4	RCP 04 MARKERBOARDS		05.20.10
5	RCP 10 ADD DOOR AT SQUAD RM.		09.28.10

ISSUED FOR PROGRESS REVIEW	
ISSUED FOR PLAN CHECK – DSA	07/01/09
ISSUED FOR PERMIT	
ISSUED FOR BID	11/18/09
ISSUED FOR CONSTRUCTION	

SEAL:

CONSULTANT:

INTERACTIVE RESOURCES
ARCHITECTURE • PLANNING • ENGINEERING
117 PARK PLACE
POINT RICHMOND
CALIFORNIA 94801
(510) 236–7435
(FAX) 232–5325
http//www.intres.com

PROJECT:

APPLIED ARTS REMODEL

CONTRA COSTA COLLEGE
2600 MISSION BELL DR.
SAN PABLO, CA.

CONTRA COSTA COMMUNITY COLLEGE DISTRICT

SHEET TITLE:

DOOR HARDWARE & WINDOW SCHEDULES

PROJ. NO.	2008–090.01
PREPARATION AND REVIEW	
DRAWN BY	MT
DESIGNER	GYN
PROJ. MGR.	GYN
PEER REVIEW	

SHEET NUMBER:

A4.2

NUMBER: OF:

C:\Users\Mike Mahoney\Desktop\Contra Costa Fine Arts Remodel – CAD Work 5–11\CAD files\A4.2 DOOR HARDWARE AND WINDOW.dwg 6/17/2011 10:46 AM Mike Mahoney

01

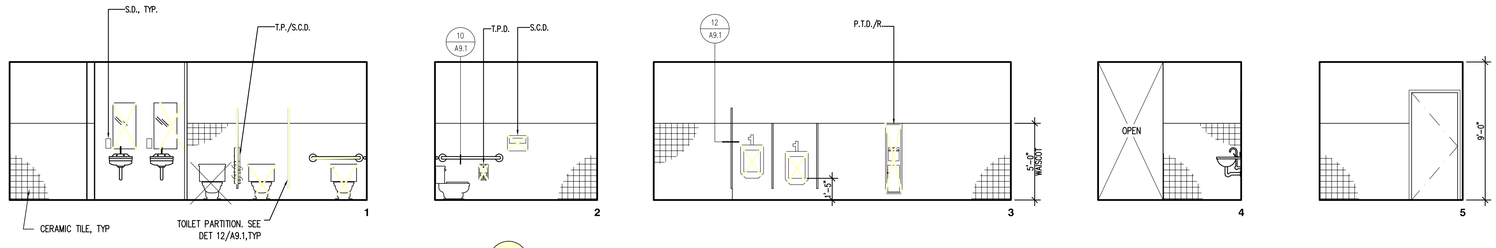

22

NOTE: SEE DETAIL 4/A9.1 FOR TYPICAL NEW TOILET MOUNTING FIXTURES HEIGHT. SEE A2.5 FOR LEGEND

1 **MEN'S - 112**
SCALE: 1/4"=1'-0"

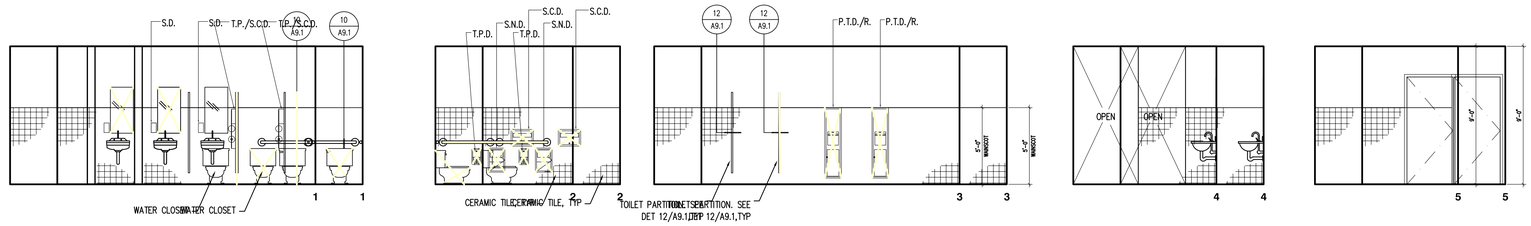

22

NOTE: SEE DETAIL 4/A9.1 FOR TYPICAL NEW TOILET MOUNTING FIXTURES HEIGHT. SEE A2.5 FOR LEGEND

2 **WOMEN'S - 114**
SCALE: 1/4"=1'-0"

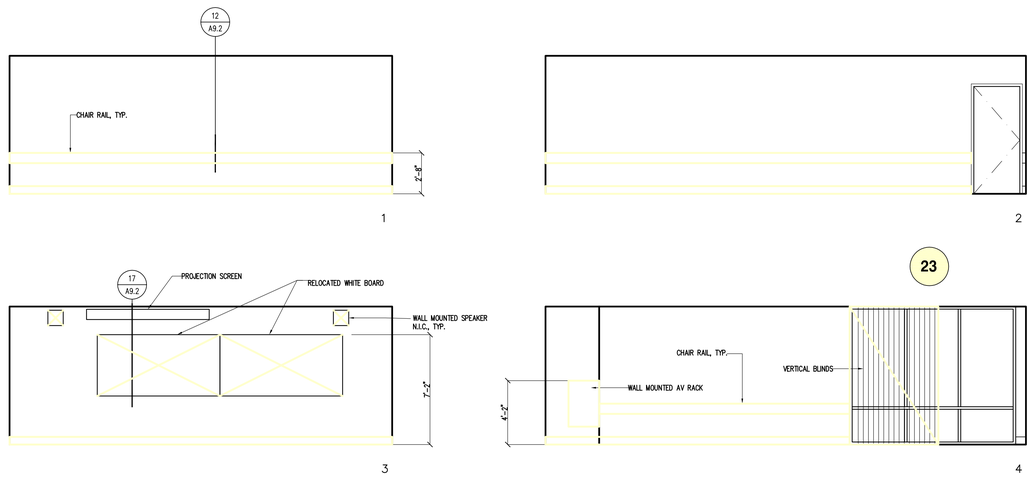

23

4 **CLASSROOM 113**
SCALE: 1/4"=1'-0"

PROJECT RECORD DRAWINGS
6/16/2011
CONTRACTOR: JOHNSTONE MOYER INC.

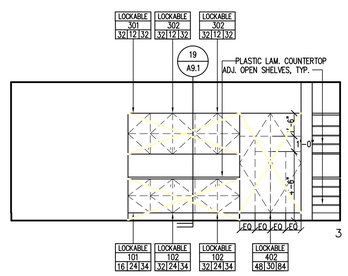

8

3 **SPEECH SQUAD ROOM 113C**
SCALE: 1/4"=1'-0"

REVISION	DESCRIPTION	INITIAL	DATE
1	ADDENDUM NO. 1 145 AND 137		12.23.09
2	ADDENDUM NO. 2 145 AND 137		01.07.10
	ASI NO. 2 FIRST FLR MEN'S ROOM		05.07.10
3	ASI NO. 3 AV EQUIP. @ 137, 143, 145		05.20.10
4	RCP 04 MARKERBOARDS		05.20.10
5	RCP 10 ADD DOOR AT SQUAD RM.		09.28.10

ISSUED FOR PROGRESS REVIEW	
ISSUED FOR PLAN CHECK – DSA	07/01/09
ISSUED FOR PERMIT	
ISSUED FOR BID	11/18/09
ISSUED FOR CONSTRUCTION	

SEAL:

CONSULTANT:

INTERACTIVE RESOURCES
ARCHITECTURE • PLANNING • ENGINEERING
117 PARK PLACE
POINT RICHMOND
CALIFORNIA 94801
(510) 236-7435
(FAX) 232-5325
http//www.intres.com

PROJECT:

APPLIED ARTS REMODEL

CONTRA COSTA COLLEGE
2600 MISSION BELL DR.
SAN PABLO, CA.

CONTRA COSTA COMMUNITY COLLEGE DISTRICT

SHEET TITLE:

INTERIOR ELEVATIONS

PROJ. NO.	2008-090.01
PREPARATION AND REVIEW	
DRAWN BY	MT
DESIGNER	GYN
PROJ. MGR.	GYN
PEER REVIEW	

SHEET NUMBER:

A5.1

NUMBER: OF:

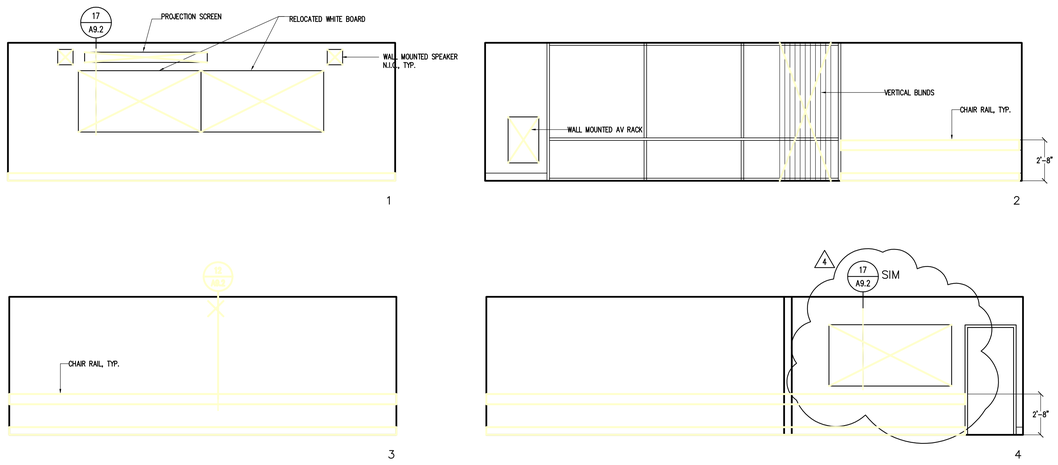

1 CLASSSROOM 131

SCALE: 1/4"=1'-0"

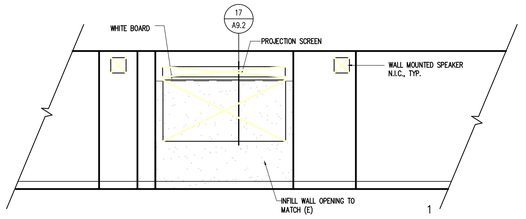

2 CLASSSROOM 135

SCALE: 1/4"=1'-0"

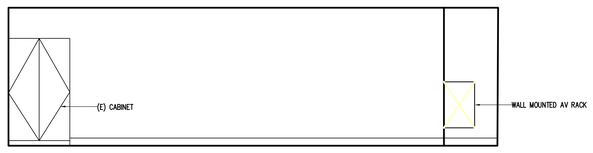

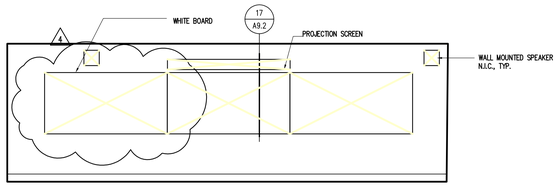

3 CLASSSROOM 133

SCALE: 1/4"=1'-0"

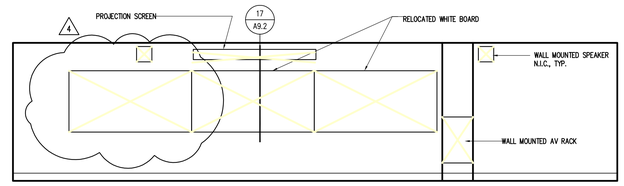

4 CLASSSROOM 143 AND 145 (SIM.)

SCALE: 1/4"=1'-0"

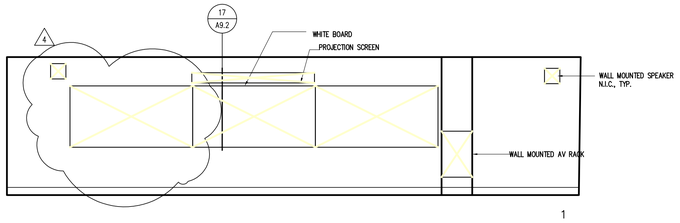

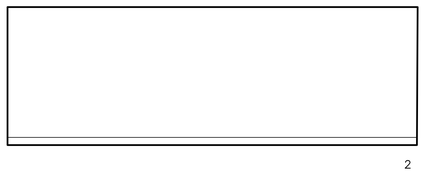

5 CLASSSROOM 137

SCALE: 1/4"=1'-0"

PROJECT RECORD DRAWINGS
6/16/2011
CONTRACTOR: JOHNSTONE MOYER INC.

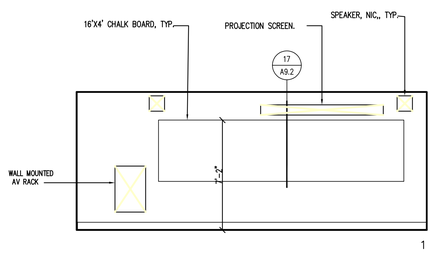

8 CLASSSROOM 250

SCALE: 1/4"=1'-0"

REVISION	DESCRIPTION	INITIAL	DATE
1	ADDENDUM NO. 1 145 AND 137		12.23.09
2	ADDENDUM NO. 2 145 AND 137		01.07.10
	ASI NO. 2 FIRST FLR MEN'S ROOM		05.07.10
3	ASI NO. 3 AV EQUIP. @ 137, 143, 145		05.20.10
4	RCP 04 MARKERBOARDS		05.20.10
5	RCP 10 ADD DOOR AT SQUAD RM.		09.28.10

ISSUED FOR PROGRESS REVIEW	
ISSUED FOR PLAN CHECK – DSA	07/01/09
ISSUED FOR PERMIT	
ISSUED FOR BID	11/18/09
ISSUED FOR CONSTRUCTION	

SEAL:

CONSULTANT:

INTERACTIVE
RESOURCES
ARCHITECTURE • PLANNING • ENGINEERING
117 PARK PLACE
POINT RICHMOND
CALIFORNIA 94801
(510) 236-7435
(FAX) 232-5325
http://www.intres.com

PROJECT:

APPLIED ARTS REMODEL

CONTRA COSTA COLLEGE
2600 MISSION BELL DR.
SAN PABLO, CA.

CONTRA COSTA COMMUNITY COLLEGE DISTRICT

SHEET TITLE:

INTERIOR ELEVATIONS

PROJ. NO.	2008-090.01
PREPARATION AND REVIEW	
DRAWN BY	MT
DESIGNER	GYN
PROJ. MGR.	GYN
PEER REVIEW	

SHEET NUMBER:

A5.2

NUMBER: OF:

C:\Users\Mark Mahoney\Desktop\Contra Costa Fine Arts Remodel - CAD Work 5-11\CAD files\A5.2 INTERIOR ELEVATIONS.dwg 6/17/2011 10:49 AM Mark Mahoney

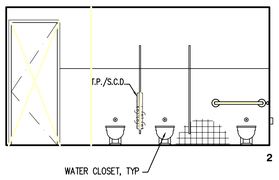

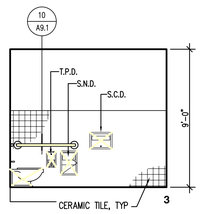

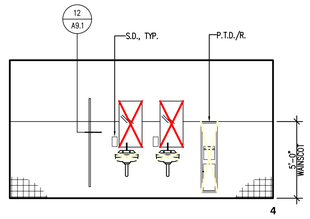

NOTE: SEE DETAIL 4/A9.1 FOR TYPICAL TOILET MOUNTING FIXTURES HEIGHT. SEE A.2.5 FOR LEGEND

1 WOMEN - 233
SCALE: 1/4"=1'-0"

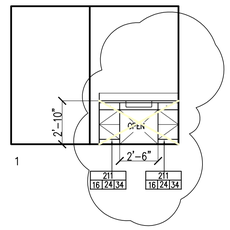

3 OFFICE 111A
SCALE: 1/4"=1'-0"

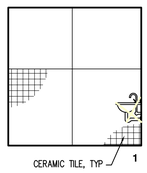

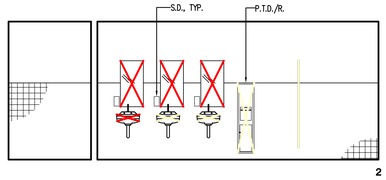

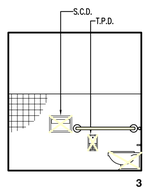

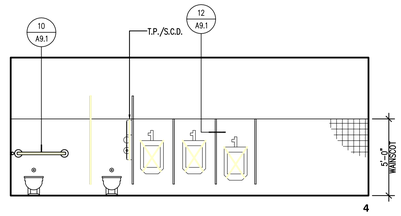

NOTE: SEE DETAIL 4/A9.1 FOR TYPICAL NEW TOILET MOUNTING FIXTURES HEIGHT. SEE A2.5 FOR LEGEND

5 MEN - 235
SCALE: 1/4"=1'-0"

PROJECT RECORD DRAWINGS
6/16/2011
CONTRACTOR: JOHNSTONE MOYER INC.

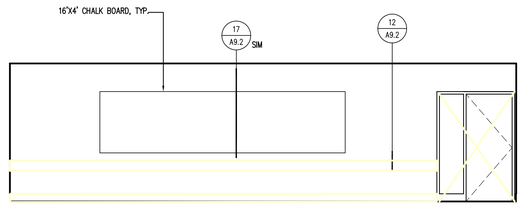

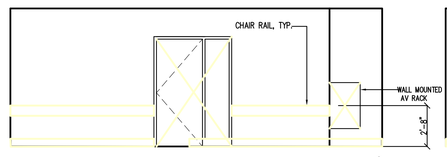

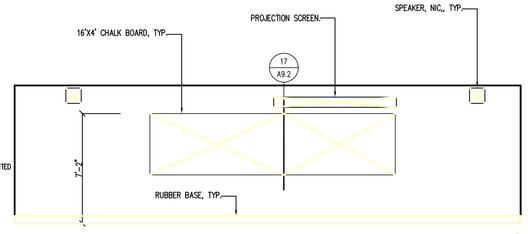

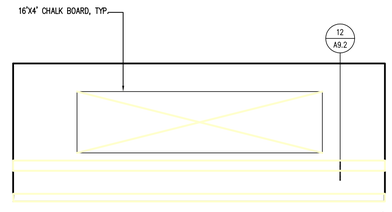

6 CLASSSROOM 251
SCALE: 1/4"=1'-0"

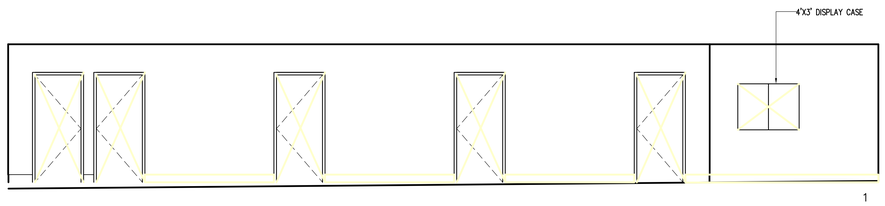

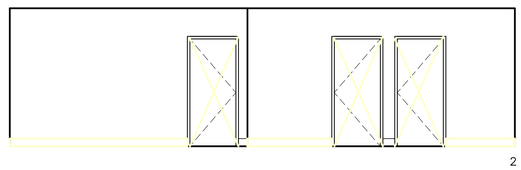

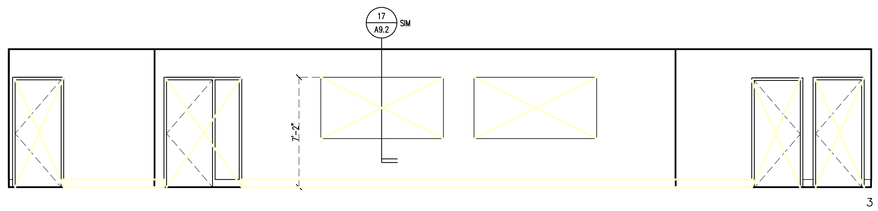

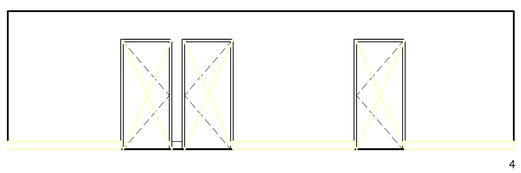

9 CLASSSROOM 252
SCALE: 1/4"=1'-0"

REVISION	DESCRIPTION	INITIAL	DATE
1	ADDENDUM NO. 1 145 AND 137		12.23.09
2	ADDENDUM NO. 2 145 AND 137		01.07.10
	ASI NO. 2 FIRST FLR MEN'S ROOM		05.07.10
3	ASI NO. 3 AV EQUIP. @ 137, 143, 145		05.20.10
4	RCP 04 MARKERBOARDS		05.20.10
5	RCP 10 ADD DOOR AT SQUAD RM.		09.28.10

ISSUED FOR PROGRESS REVIEW	
ISSUED FOR PLAN CHECK – DSA	07/01/09
ISSUED FOR PERMIT	
ISSUED FOR BID	11/18/09
ISSUED FOR CONSTRUCTION	

SEAL:

CONSULTANT:

INTERACTIVE
RESOURCES
ARCHITECTURE • PLANNING • ENGINEERING
117 PARK PLACE
POINT RICHMOND
CALIFORNIA 94801
(510) 236-7435
(FAX) 232-5325
http//www.intres.com

PROJECT:

APPLIED ARTS REMODEL

CONTRA COSTA COLLEGE
2600 MISSION BELL DR.
SAN PABLO, CA.

CONTRA COSTA COMMUNITY COLLEGE DISTRICT

SHEET TITLE:

INTERIOR ELEVATIONS

PROJ. NO.	2008-090.01
PREPARATION AND REVIEW	
DRAWN BY	MT
DESIGNER	GYN
PROJ. MGR.	GYN
PEER REVIEW	

SHEET NUMBER:

A5.3

NUMBER: OF:

© \Users\Mike Mahoney\Desktop\Contra Costa Fine Arts Remodel – CAD Work 5-11\CAD files\A5.3 INTERIOR ELEVATIONS.dwg 6/17/2011 10:54 AM Mike Mahoney

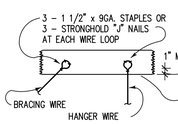

(A) WOOD JOIST OR RAFTER

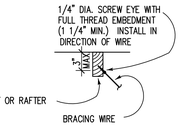

(B) AT WOOD JOIST OR RAFTER

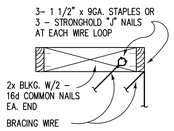

(C) AT WOOD JOIST OR BLOCK

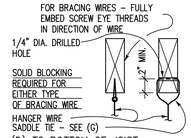

(D) TO BOTTOM OF JOIST

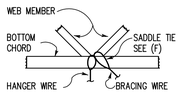

(E) BRACING WIRE PARALLEL TO WOOD TRUSS

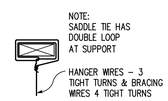

(F) TYP. SADDLE TIE

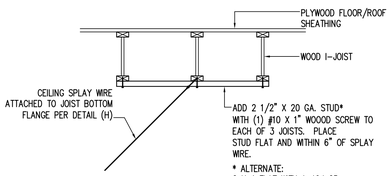

(G) WOOD I–JOIST

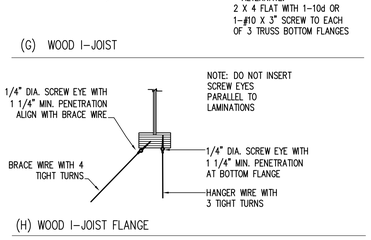

(H) WOOD I–JOIST FLANGE

17 CEILING WIRE ANCHORAGE AT WOOD STRUCTURE
SCALE: NTS
\model\details\ceiling\ceiling wire anchorage

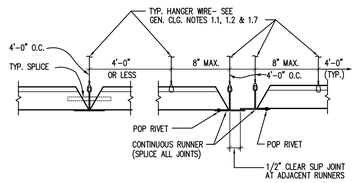

13 SLIP JOINT AT EXIT WAY AND INTERSECTION
SCALE: NTS
\model\details\ceiling\ceiling wire anchorage

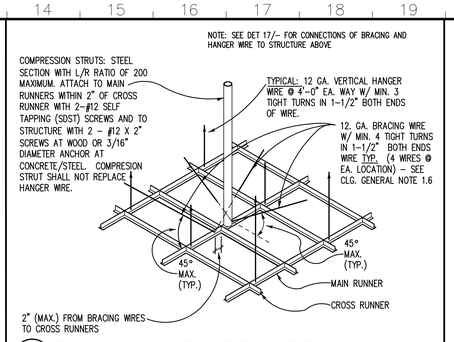

9 TYPICAL SUPPORT AT T-BAR GRID
SCALE: ISOMETRIC

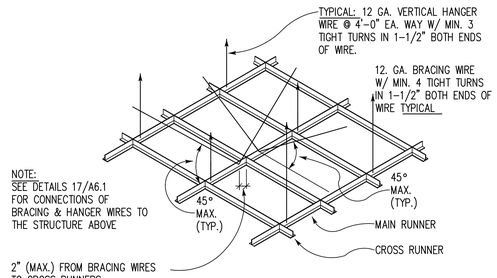

14 SUPPORT AT T-BAR GRID
SCALE: NTS
\model\details\ceiling\ceiling wire anchorage

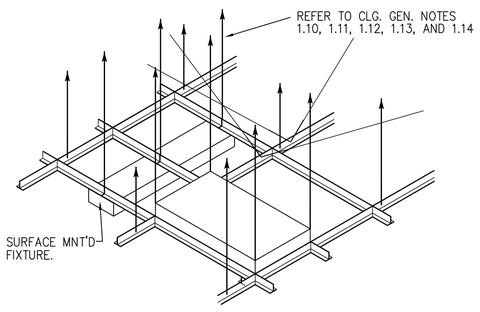

15 LIGHT FIXTURE SERVICE ATTACHMENT
SCALE: NTS
\model\details\ceiling\ceiling wire anchorage

CEILING GENERAL NOTES FOR METAL SUSPENSION FOR LAY-IN PANEL CEILING

1.1 12 GA. (MIN.) HANGER WIRES MAY BE USED FOR UP TO AND INCLUDING 4'–0" X 4'–0" GRID SPACING AND SHALL BE ATTACHED TO MAIN RUNNERS.

1.2 PROVIDE 12 GA. HANGER WIRES AT THE ENDS OF ALL MAIN AND CROSS RUNNERS WITHIN 8" FROM THE SUPPORT OR WITHIN 1/4 OF THE LENGTH OF THE END RUNNER, WHICHEVER IS LEAST, FOR THE PERIMETER OF THE CEILING AREA. END CONNECTIONS FOR RUNNERS WHICH ARE DESIGNED AND DETAILED TO RESIST THE APPLIED VERTICAL AND HORIZONTAL FORCES MAY BE USED IN LIEU OF THE 12 GA. HANGER WIRES, SUBJECT TO DIVISION OF THE STATE ARCHITECT (DSA) REVIEW AND APPROVAL.

1.3 PROVIDE TRAPEZE OR OTHER SUPPLEMENTARY SUPPORT MEMBERS AT OBSTRUCTIONS TO MAIN HANGER SPACING. PROVIDE ADDITIONAL HANGERS, STRUTS OR BRACES AS REQUIRED AT ALL CEILING BREAKS, SOFFITS OR DISCONTINUOUS AREAS. HANGER WIRES THAT ARE MORE THAN 1 IN 6 OUT OF PLUMB REQUIRE COUNTER–SLOPING WIRES.

1.4 CEILING GRID MEMBERS MAY BE ATTACHED TO NOT MORE THAN 2 ADJACENT WALLS. CEILING GRID MEMBERS SHOULD BE AT LEAST 1/2 INCH FREE OF OTHER WALLS. IF WALLS RUN DIAGONALLY TO CEILING GRID SYSTEM RUNNERS, ONE END OF MAIN AND CROSS RUNNERS SHOULD BE FREE AND A MINIMUM OF 1/2 INCH CLEAR OF WALL.

1.5 AT THE PERIMETER OF THE CEILING AREA WHERE MAIN OR CROSS RUNNERS ARE NOT CONNECTED TO THE ADJACENT WALL, PROVIDE INTERCONNECTION BETWEEN THE RUNNERS AT THE FREE END TO PREVENT LATERAL SPREADING. A METAL STRUT OR A 16 GA. WIRE WITH A POSITIVE MECHANICAL CONNECTION TO THE RUNNER MAY BE USED. WHERE THE PERPENDICULAR DISTANCE FROM THE WALL TO THE FIRST PARALLEL RUNNER IS 12" OR LESS, THIS INTERLOCK IS NOT REQUIRED.

1.6 PROVIDE BRACING ASSEMBLIES CONSISTING OF A COMPRESSION STRUT AND FOUR (4) 12 GA. SPLAYED BRACING WIRES ORIENTED 90 DEGREES FROM EACH OTHER AT THE FOLLOWING SPACING:

1. FOR SCHOOL BUILDINGS, PLACE BRACING ASSEMBLIES NOT MORE THAN 12' BY 12' ON CENTER.

2. FOR ESSENTIAL SERVICES BUILDING, PLACE BRACING ASSEMBLIES NOT MORE THAN 8' BY 12' ON CENTER.

3. PROVIDE BRACING ASSEMBLIES AT LOCATIONS NOT MORE THAN ONE HALF THE SPACINGS GIVEN ABOVE, FROM EACH PERIMETER WALL AND AT THE EDGE OF VERTICAL CEILING OFFSETS. THE SLOPE OF THESE WIRES SHALL NOT EXCEED 45 DEGREES FROM THE PLANE OF THE CEILING AND SHALL BE TAUT. SPLICES IN BRACING WIRES ARE NOT TO BE PERMITTED WITHOUT SPECIAL DSA APPROVAL.

4. SUSPENDED ACOUSTICAL CEILING SYSTEMS WITH A CEILING AREA OF 144 SQUARE FEET OR LESS AND FIRE RATED SUSPENDED ACOUSTICAL CEILING SYSTEMS WITH A CEILING AREA OF 96 SQUARE FEET OR LESS, SURROUNDED BY WALLS WHICH CONNECT DIRECTLY TO THE STRUCTURE ABOVE, DO NOT REQUIRE BRACING ASSEMBLIES WHEN ATTACHED TO TWO (2) ADJACENT WALLS.

1.7 FASTEN HANGER WIRES WITH NOT LESS THAN THREE (3) TIGHT TURNS. FASTEN BRACING WIRES WITH FOUR (4) TIGHT TURNS. MAKE ALL TURNS WITHIN A DISTANCE OF 1 1/2 INCHES. HANGER OR BRACING WIRE ANCHORS TO THE STRUCTURE SHOULD BE INSTALLED IN SUCH A MANNER THAT THE DIRECTION OF THE WIRE ALIGNS AS CLOSELY AS POSSIBLE WITH THE DIRECTION OF THE FORCES ACTING ON THE WIRE.

NOTE: WIRE TURNS MADE BY MACHINE WHERE BOTH STRANDS HAVE BEEN DEFORMED OR BENT IN WRAPPING CAN WAIVE THE 1 1/2 INCHES REQUIREMENT, BUT THE NUMBER OF TURNS SHOULD BE MAINTAINED AND BE AS TIGHT AS POSSIBLE.

1.8 SEPARATE ALL CEILING HANGING AND BRACING WIRES AT LEAST 6 INCHES FROM ALL UNBRACED DUCTS, PIPES, CONDUIT, ETC. IT IS ACCEPTABLE TO ATTACH LIGHTWEIGHT ITEMS, SUCH AS SINGLE ELECTRICAL CONDUIT NOT EXCEEDING 3/4" NOMINAL DIAMETER, TO HANGER WIRES USING CONNECTORS ACCEPTABLE TO DSA.

1.9 WHEN DRILLED–IN CONCRETE ANCHORS OR SHOT–IN ANCHORS ARE USED IN REINFORCED CONCRETE FOR HANGER WIRES, 1 OUT OF 10 MUST BE FIELD TESTED FOR 200 POUNDS IN TENSION. WHEN DRILLED–IN CONCRETE ANCHORS ARE USED FOR BRACING WIRES, 1 OUT OF 2 MUST BE FIELD TESTED FOR 440 POUNDS IN TENSION. SHOT–IN ANCHORS IN CONCRETE ARE NOT PERMITTED FOR BRACING WIRES. IF ANY SHOT–IN OR DRILLED–IN ANCHOR FAILS, SEE CBC SECTION 1923A.3.5.

1.10 ATTACH ALL LIGHT FIXTURES TO THE CEILING GRID RUNNERS TO RESIST A HORIZONTAL FORCE EQUAL TO THE WEIGHT OF THE FIXTURES. SCREWS OR APPROVED FASTENERS ARE REQUIRED.

1.11 FLUSH OR RECESSED LIGHT FIXTURES AND AIR TERMINALS OR SERVICES WEIGHING 56 POUNDS OR MORE MAY BE SUPPORTED DIRECTLY ON THE RUNNERS OF A HEAVY DUTY GRID SYSTEM BUT, IN ADDITION, THEY MUST HAVE A MINIMUM OF TWO (2) 12 GA. SLACK SAFETY WIRES ATTACHED TO THE FIXTURE AT DIAGONAL CORNERS AND ANCHORED TO THE STRUCTURE ABOVE. ALL 4' X 4' LIGHT FIXTURES MUST HAVE SLACK SAFETY WIRES AT EACH CORNER.

ALL FLUSH OR RECESSED LIGHT FIXTURES AND AIR TERMINALS OR SERVICES WEIGHING 56 POUNDS OR MORE MUST BE INDEPENDENTLY SUPPORTED BY NOT LESS THAN 4 TAUT 12 GA. WIRES EACH ATTACHED TO THE FIXTURE AND TO THE STRUCTURE ABOVE REGARDLESS OF THE TYPE OF CEILING GRID SYSTEM USED.

THE 4 TAUT 12 GA. WIRES INCLUDING THEIR ATTACHMENT TO THE STRUCTURE ABOVE MUST BE CAPABLE OF SUPPORTING 4 TIMES THE WEIGHT OF THE UNIT.

1.12 ALL FIXTURES AND AIR TERMINALS OR SERVICES SUPPORTED ON INTERMEDIATE DUTY GRID SYSTEMS MUST BE INDEPENDENTLY SUPPORTED BY NOT LESS THAN 4 TAUT 12 GA. WIRES EACH ATTACHED TO THE FIXTURE OR TERMINAL AND TO THE STRUCTURE ABOVE.

1.13 SUPPORT SURFACE MOUNTED LIGHT FIXTURE BY AT LEAST TWO (2) POSITIVE DEVICES WHICH SURROUND THE CEILING RUNNER AND WHICH ARE EACH SUPPORTED FROM THE STRUCTURE ABOVE BY 12 GA. WIRE. SPRING CLIPS OR CLAMPS THAT CONNECT ONLY TO THE RUNNER ARE NOT ACCEPTABLE. PROVIDE ADDITIONAL SUPPORTS WHEN LIGHT FIXTURES ARE 8 FEET OR LONGER.

1.14 SUPPORT PENDANT MOUNTED LIGHT FIXTURES DIRECTLY FROM THE STRUCTURE ABOVE WITH HANGER WIRES OR CABLES PASSING THROUGH EACH PENDANT HANGER AND CAPABLE OF SUPPORTING FOUR (4) TIMES THE WEIGHT OF THE FIXTURE. A BRACING ASSEMBLY (SEE DETAIL) IS REQUIRED WHERE THE PENDANT HANGER PENETRATES THE CEILING. SPECIAL DETAILS ARE REQUIRED TO ATTACH THE PENDANT HANGER TO THE BRACING ASSEMBLY TO TRANSMIT HORIZONTAL FORCES.

1.15 CLASSIFICATION OF CEILING GRID IS **HEAVY DUTY** SYSTEM. MANUFACTURER'S CATALOG NUMBER – MAIN RUNNER IS **DX26 CLASS A.** MANUFACTURER'S CATALOG NUMBER – CROSS RUNNER IS **DX216 CLASS A.** MANUFACTURER'S CATALOG NUMBER OF DETAIL FOR RUNNER SPLICE IS **AC269ORC.**

ADDITIONAL REQUREMENTS FOR FIRE RATED CEILINGS:

2.1 PROVIDE UNDERWRITER LABORATORY (U.L.) DESIGN NUMBER OR STATE FIRE MARSHAL (SFM) LISTING NUMBER. THE COMPONENTS AND INSTALLLATION DETAILS MUST CONFORM IN EVERY RESPECT WITH THE U.L. OR SFM APPROVAL FOR THE DESIGN NUMBER SPECIFIED. CUSTOM DESIGNS WHICH COMBINE COMPONENTS FROM DIFFERENT APPROVAL DESIGNS BUT HAVE NOT BEEN TESTED AS A COMPLETE ASSEMBLY ARE NOT ACCEPTABLE.

2.2 FOR SCHOOLS AND ESSENTIAL SERVICES BUILDINGS, BRACING ASSEMBLIES ARE REQUIRED FOR EACH 96 SQUARE FEET. THE FIRST BRACING ASSEMBLY IS REQUIRED NOT MORE THAN FOUR FEET FROM EACH WALL. A MINIMUM OF ONE BRACING ASSEMBLY IS REQUIRED BETWEEN ANY TWO ADJACENT EXPANSION CUT–OUTS ON RUNNERS BEING BRACED.

2.3 POP RIVETS, SCREWS OR OTHER ATTACHMENTS ARE NOT ACCEPTABLE UNLESS SPECIFICALLY DETAILED ON THE DRAWINGS AND APPROVED BY U.L. AND SFM.

PROJECT RECORD DRAWINGS
6/16/2011
CONTRACTOR: JOHNSTONE MOYER INC.

7 METAL SUSPENDED LAY-IN PANEL GENERAL NOTES
SCALE: NTS

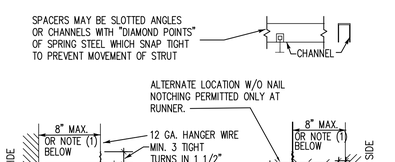

20 HANGER WIRE CONNECTIONS TO GRID
SCALE: NTS
\model\details\ceiling\ceiling wire anchorage

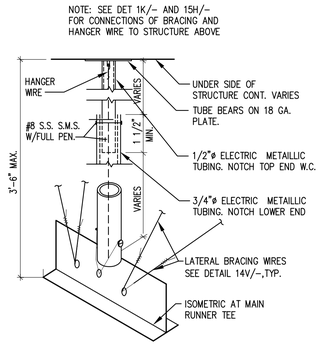

12 THRUST STRUT AT T-BAR CEILING
SCALE: NTS
\model\details\ceiling\ceiling wire anchorage

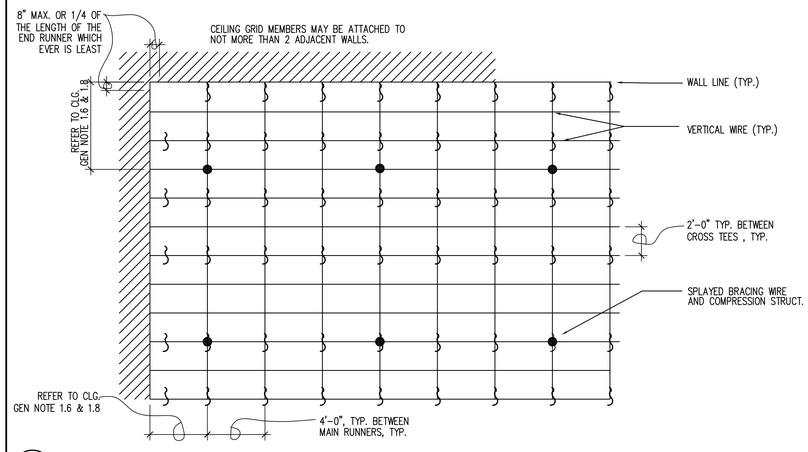

8 CEILING GRID
SCALE: NTS

REVISION	DESCRIPTION	INITIAL	DATE
1	ADDENDUM NO. 1 145 AND 137		12.23.09
2	ADDENDUM NO. 2 145 AND 137		01.07.10
	ASI NO. 2 FIRST FLR MEN'S ROOM		05.07.10
3	ASI NO. 3 AV EQUIP. @ 137, 143, 145		05.20.10
4	RCP 04 MARKERBOARDS		05.20.10
5	RCP 10 ADD DOOR AT SQUAD RM.		09.28.10

ISSUED FOR PROGRESS REVIEW	
ISSUED FOR PLAN CHECK – DSA	07/01/09
ISSUED FOR PERMIT	
ISSUED FOR BID	11/18/09
ISSUED FOR CONSTRUCTION	

SEAL:

CONSULTANT:

INTERACTIVE
RESOURCES
ARCHITECTURE • PLANNING • ENGINEERING
117 PARK PLACE
POINT RICHMOND
CALIFORNIA 94801
(510) 236–7435
(FAX) 232–5325
http//www.intres.com

PROJECT:

APPLIED ARTS REMODEL

CONTRA COSTA COLLEGE
2600 MISSION BELL DR.
SAN PABLO, CA.

CONTRA COSTA COMMUNITY COLLEGE DISTRICT

SHEET TITLE:

CEILING DETAILS

PROJ. NO.	2008–090.01
PREPARATION AND REVIEW	
DRAWN BY	MT
DESIGNER	GYN
PROJ. MGR.	GYN
PEER REVIEW	

SHEET NUMBER:

A6.1

NUMBER: OF:

© \\pwr\Mike Mahoney\Desktop\Contra Costa Fine Arts Remodel – CCC Main 5-11\CAD files\A61 ceiling.dwg 6/7/2011 10:53:51 AM Mike Mahoney

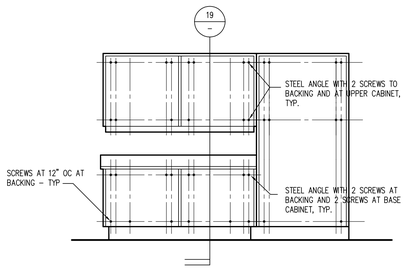

17 CASEWORK ELEVATION
SCALE: NONE
\CAD\details\casework\casework elevation

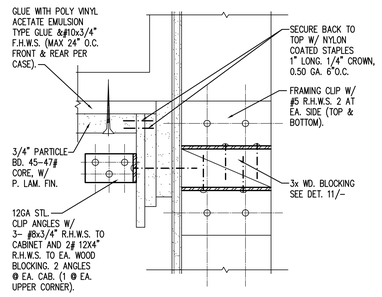

13 WALL CABINET ANCHOR
SCALE: 3"=1'-0"
\cad\

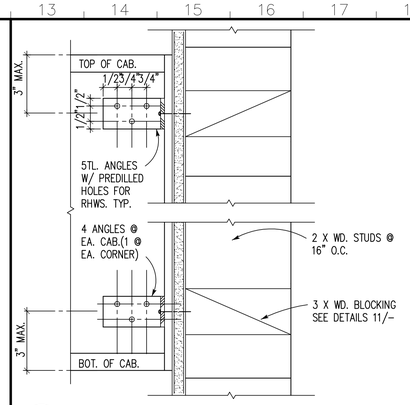

9 WALL CABINET ANCHOR
SCALE: NTS
\cad\

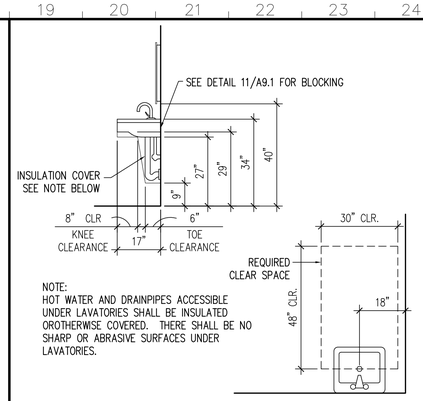

5 LAVATORY
SCALE: 1/2"=1'-0"
\cad\

1

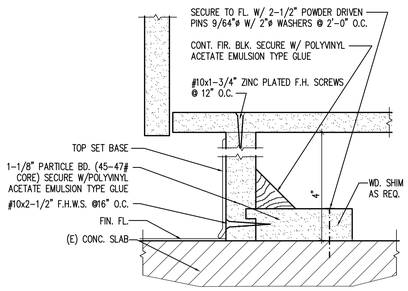

18 BASE CABINET ANCHOR AT TOE SPACE
SCALE: HALF SIZE
\cad\

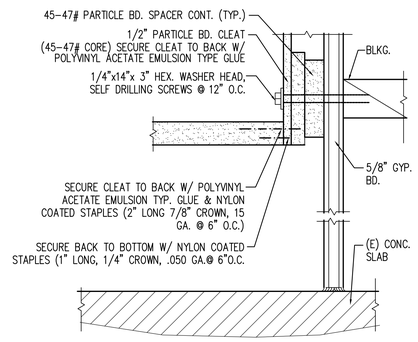

14 BASE CABINET ANCHOR
SCALE: HALF SIZE
\cad\

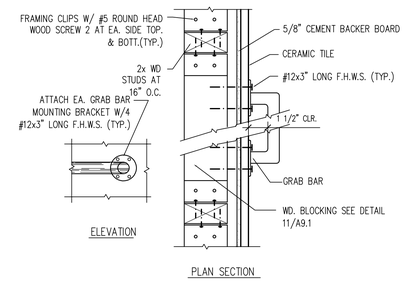

10 GRAB BAR
SCALE: 3"=1'-0"
\cad\

6

2

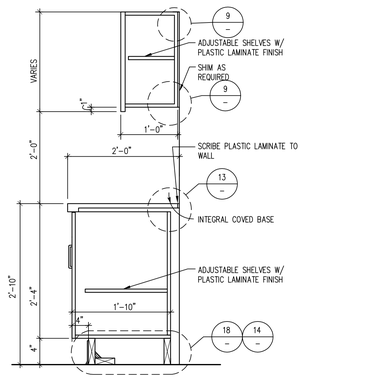

19 CASEWORK SECTION
SCALE: NONE
\CAD\details\casework\casework section

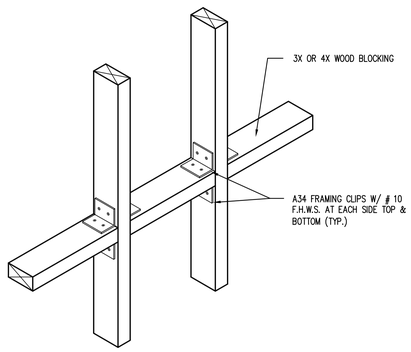

11 WOOD BLOCKING
SCALE: NTS
\cad\

7

PROJECT RECORD DRAWINGS
6/16/2011
CONTRACTOR: JOHNSTONE MOYER INC.

3

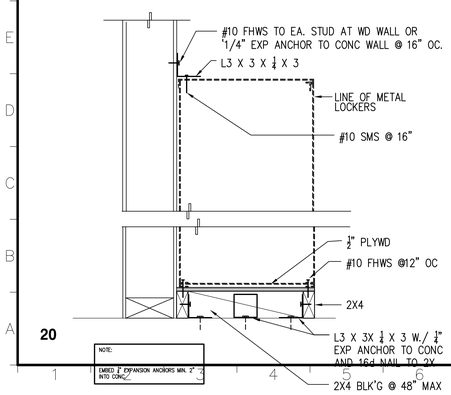

20

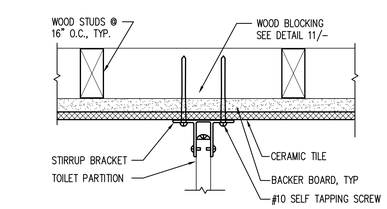

12 TOILET PARTITION
SCALE: 3"=1'-0"
\cad\

8

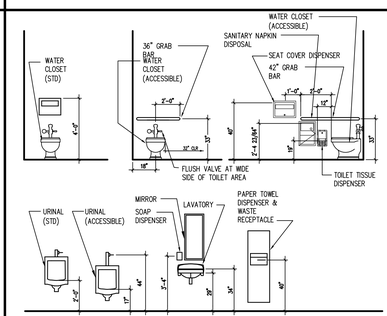

4 TYP TOILET FIXTURE MOUNTING HEIGHT
SCALE: NTS
\cad\

8

REVISION	DESCRIPTION	INITIAL	DATE
1	ADDENDUM NO. 1 145 AND 137		12.23.09
2	ADDENDUM NO. 2 145 AND 137		01.07.10
	ASI NO. 2 FIRST FLR MEN'S ROOM		05.07.10
3	ASI NO. 3 AV EQUIP. @ 137, 143, 145		05.20.10
4	RCP 04 MARKERBOARDS		05.20.10
5	RCP 10 ADD DOOR AT SQUAD RM.		09.28.10

ISSUED FOR PROGRESS REVIEW	
ISSUED FOR PLAN CHECK - DSA	07/01/09
ISSUED FOR PERMIT	
ISSUED FOR BID	11/18/09
ISSUED FOR CONSTRUCTION	

SEAL:

CONSULTANT:

INTERACTIVE
RESOURCES
ARCHITECTURE • PLANNING • ENGINEERING
117 PARK PLACE
POINT RICHMOND
CALIFORNIA 94801
(510) 236-7435
(FAX) 232-5325
http//www.intres.com

PROJECT:

APPLIED ARTS REMODEL

CONTRA COSTA COLLEGE
2600 MISSION BELL DR.
SAN PABLO, CA.

CONTRA COSTA COMMUNITY COLLEGE DISTRICT

SHEET TITLE:

INTERIOR DETAILS

PROJ. NO.	2008-090.01
PREPARATION AND REVIEW	
DRAWN BY	MT
DESIGNER	GYN
PROJ. MGR.	GYN
PEER REVIEW	

SHEET NUMBER:

A9.1

NUMBER: OF:

© Interactive Resources 6/17/2011 10:55 AM Mike Mahoney
G:\Users\Mike Mahoney\Desktop\Contra Costa Fine Arts Remodel - CAD Work 5-11\CAD files\A9\1 INTERIOR DETAILS.dwg

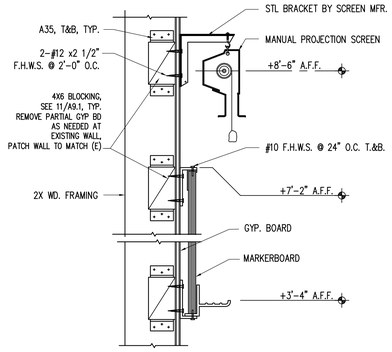

17 MARKERBOARD/PROJECTOR SCREEN DETAIL
SCALE: 1 1/2"=1'–0" \cad\

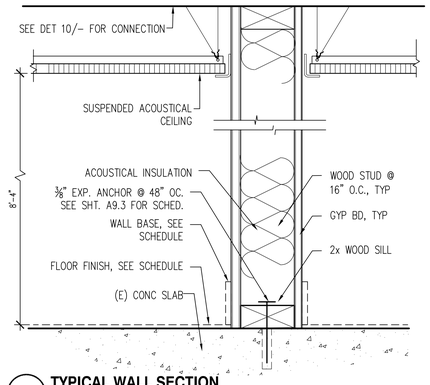

9 TYPICAL WALL SECTION
SCALE: 3"=1–0" \cad\

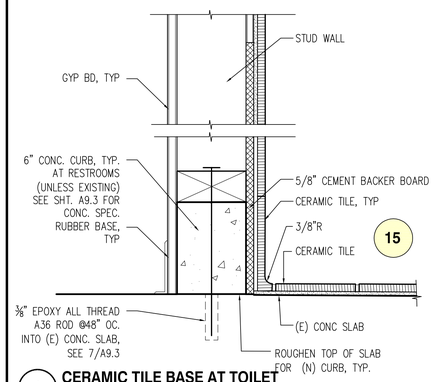

1 CERAMIC TILE BASE AT TOILET
SCALE: 3"=1–0" \cad\

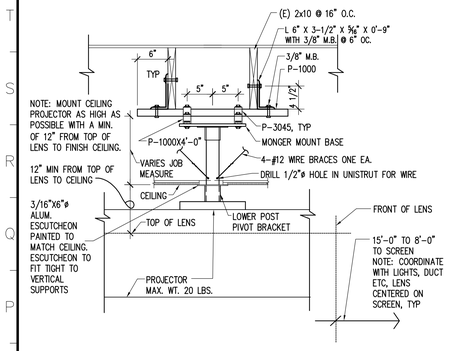

18 PROJECTOR MOUNT CEILING
SCALE: 1"=1'–0" \cad\

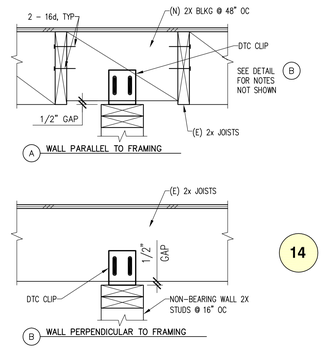

14

10 TYPICAL NON-BEARING WALL
SCALE: NTS \cad\

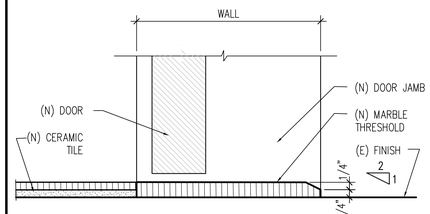

6 THRESHOLD AT TOILET ROOM DOOR
SCALE: 6"=1'–0" \details\threshold at toilet

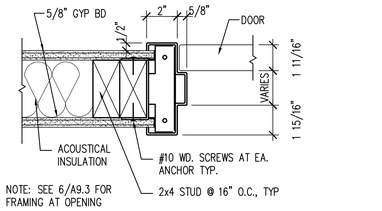

2 DOOR JAMB (HEAD SIM)
SCALE: 3"=1'–0" \cad\

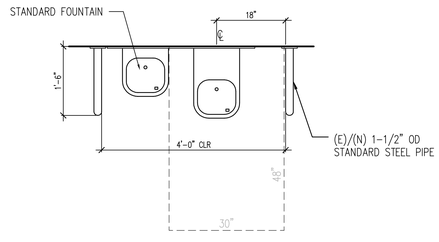

PLAN VIEW

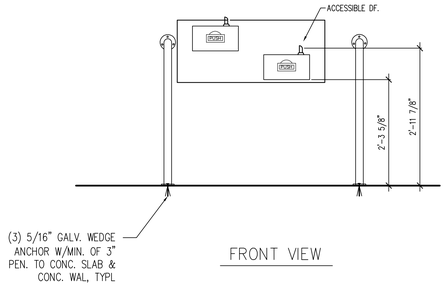

FRONT VIEW

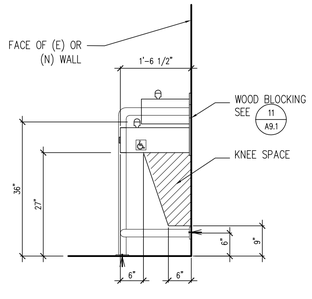

SIDE VIEW

20 ACCESSIBLE DRINKING FOUNTAIN
SCALE: 3/4"=1'–0" \cad\drinking fountain.dwg

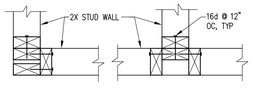

11 TYPICAL WALL INTERSECTIONS
SCALE: NTS \cad\

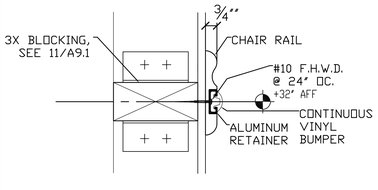

12 CHAIR RAIL
NTS \cad\

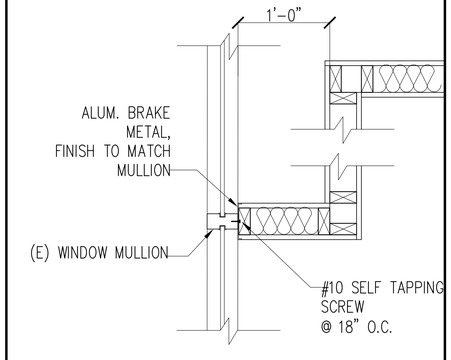

7 WALL AT WINDOW MULLION
1 1/2"=1'–0" \cad\

PROJECT RECORD DRAWINGS
6/16/2011
CONTRACTOR: JOHNSTONE MOYER INC.

REVISION	DESCRIPTION	INITIAL	DATE
1	ADDENDUM NO. 1 145 AND 137		12.23.09
2	ADDENDUM NO. 2 145 AND 137		01.07.10
	ASI NO. 2 FIRST FLR MEN'S ROOM		05.07.10
3	ASI NO. 3 AV EQUIP. @ 137, 143, 145		05.20.10
4	RCP 04 MARKERBOARDS		05.20.10
5	RCP 10 ADD DOOR AT SQUAD RM.		09.28.10

ISSUED FOR PROGRESS REVIEW	
ISSUED FOR PLAN CHECK – DSA	07/01/09
ISSUED FOR PERMIT	
ISSUED FOR BID	11/18/09
ISSUED FOR CONSTRUCTION	

SEAL:

CONSULTANT:

INTERACTIVE
RESOURCES
ARCHITECTURE • PLANNING • ENGINEERING
117 PARK PLACE
POINT RICHMOND
CALIFORNIA 94801
(510) 236–7435
(FAX) 232–5325
http://www.intres.com

PROJECT:

APPLIED ARTS REMODEL

CONTRA COSTA COLLEGE
2600 MISSION BELL DR.
SAN PABLO, CA.

CONTRA COSTA COMMUNITY COLLEGE DISTRICT

SHEET TITLE:

INTERIOR DETAILS

PROJ. NO.	2008–090.01
PREPARATION AND REVIEW	
DRAWN BY	MT
DESIGNER	GYN
PROJ. MGR.	GYN
PEER REVIEW	

SHEET NUMBER:

A9.2

NUMBER: OF:

© \\cam\Mike Mahoney\Desktop\Contra Costa Fine Arts Remodel – Old Wire 5–11\CAD files\A9.2 INTERIOR DETAILS.dwg 6/17/2011 10:57 AM Mike Mahoney

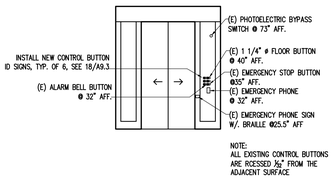

17 ELEVATOR CAB INTERIOR ELEVATION
SCALE: 1/4"=1'-0"

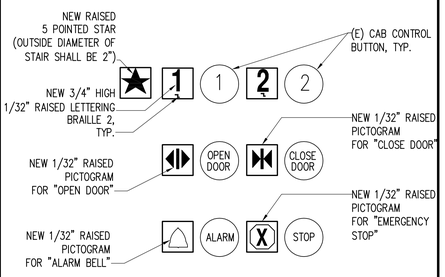

18 ELEVATOR CONTROL BUTTON ID
SCALE: 1/4"=1'-0"

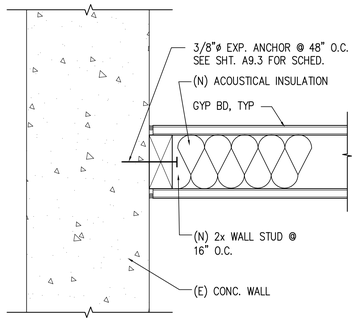

9 (N) WALL @ (E) CONC. WALL - PLAN
SCALE: 3"=1'-0"

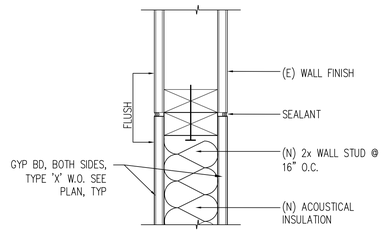

10 CONNECTION @ (N) WALL TO (E) - PLAN
SCALE: 3"=1'-0"

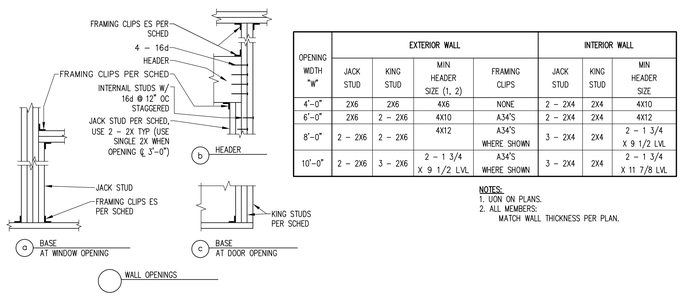

OPENING WIDTH "W"	EXTERIOR WALL				INTERIOR WALL		
	JACK STUD	KING STUD	MIN HEADER SIZE (1, 2)	FRAMING CLIPS	JACK STUD	KING STUD	MIN HEADER SIZE
4'–0"	2X6	2X6	4X6	NONE	2 – 2X4	2X4	4X10
6'–0"	2X6	2 – 2X6	4X10	A34'S	2 – 2X4	2X4	4X12
8'–0"	2 – 2X6	2 – 2X6	4X12	A34'S WHERE SHOWN	3 – 2X4	2X4	2 – 1 3/4 X 9 1/2 LVL
10'–0"	2 – 2X6	3 – 2X6	2 – 1 3/4 X 9 1/2 LVL	A34'S WHERE SHOWN	3 – 2X4	2X4	2 – 1 3/4 X 11 7/8 LVL

NOTES:
1. UON ON PLANS.
2. ALL MEMBERS: MATCH WALL THICKNESS PER PLAN.

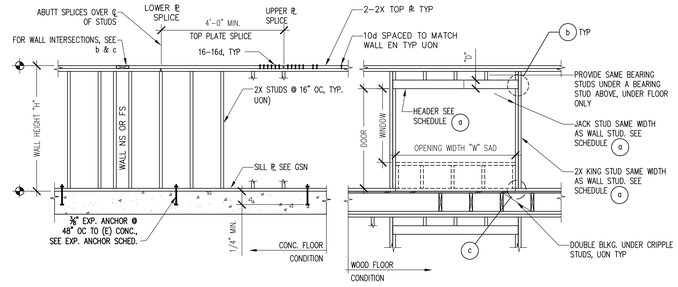

6 WALL FRAMING
SCALE: NTS

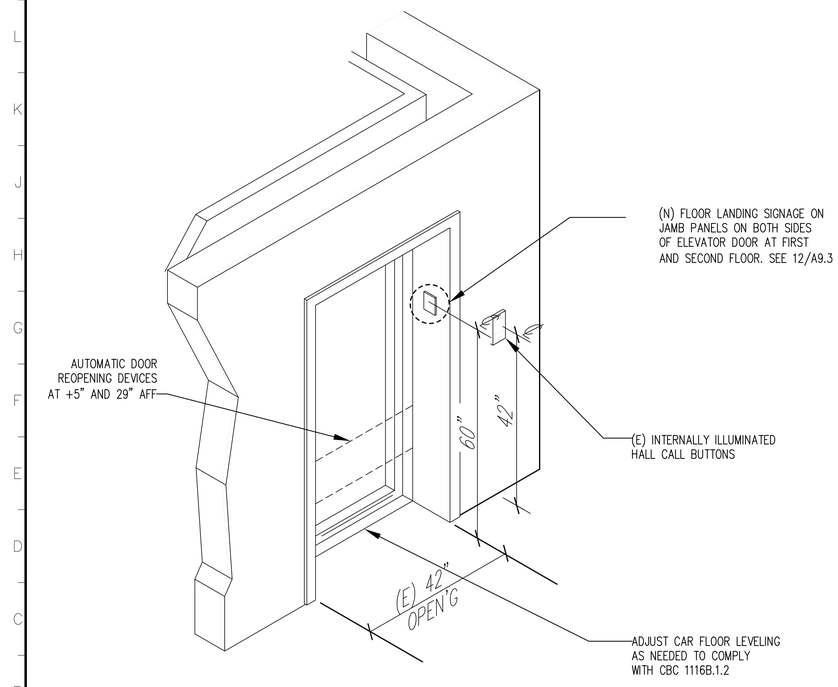

20 ELEVATOR
SCALE: NTS

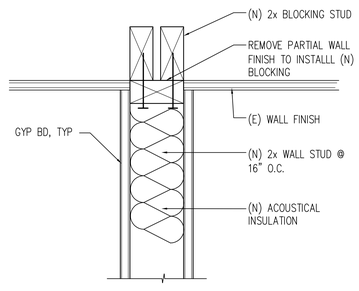

11 (N) WALL PERPINDICULAR TO (E) - PLAN
SCALE: 3"=1'-0"

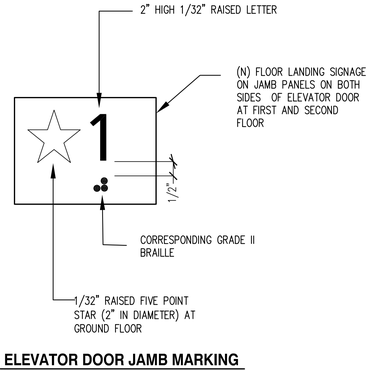

12 ELEVATOR DOOR JAMB MARKING
SCALE: NTS

EPOXY ANCHORS DESIGN AND TEST LOADS				
	ANCHORS IN CONCRETE (1)			
SIZE	MIN EMBED	TENSION	SHEAR	TEST LOADS (1,5)
3/8"ø	3 1/2"	1872#	1616#	3744#
1/2"ø	4 1/4"	3194#	3092#	6389#
5/8"ø	5"	3750#	3454#	7500#
3/4"ø	6 3/4"	5402#	5886#	10805#
7/8"ø	7 3/4"	6510#	6166#	13021#

NOTES:
1. ABOVE VALUES BASED ON 80% OF THE LESSER VALUES FROM SIMPSON STRONG–TIE, ICC ESR 1772 DATED 12/1/2004.
2. SEE DETAILS FOR ADDITIONAL DOWEL INFORMATION.
3. HOLES SHALL BE DRY. CLEAN HOLES WITH NYLON BRUSH TO REMOVE LOOSE MATERIAL AND BLOW OUT HOLES WITH OIL–FREE COMPRESSED AIR.
4. NOTIFY ARCHITECT IMMEDIATELY IF ELEMENTS WITHIN THE EXISTING STRUCTURE PREVENT DRILLING IN THE LOCATIONS SHOWN ON THE DRAWINGS.
5. FIELD TESTING: TENSION TEST 10% OF DOWELS IN EACH DIAMETER GROUP TO THE VALUES TABULATED ABOVE. TESTS SHALL BE PERFORMED BY THE OWNER'S TESTING AGENCY. IF ANY DOWEL FAILS, TEST ALL DOWELS NOT PREVIOUSLY TESTED UNTIL 20 CONSECUTIVE PASS. TESTING SHALL OCCUR 7 DAYS MINIMUM AFTER DOWEL INSTALLATION. TEST AND INSPECTION COSTS ASSOCIATED WITH FAILED DOWELS SHALL BE DEDUCTED FROM THE CONTRACT SUM.
6. SEE GENERAL STRUCTURAL NOTES FOR ADDITIONAL REQUIREMENTS.
7. ALL (100%) HOLD DOWN GROUTED ANCHORS SHALL BE TESTED. SEE DETAILS 11, 12/S1.1.

7 TYPICAL EPOXY DOWELS (DO NOT USE FOR HOLD DOWNS AND WOOD TO CONC CONN.)
SCALE: N.T.S

03254 EXPANSION ANCHORS
1. TESTING OF EXPANSION ANCHORS IS REQUIRED. REFER TO CBC 1923A3.5 FOR MINIMUM PERCENT OF ANCHORS TO BE TESTED. IF ANY FAILS, TEST ALL ANCHORS. TENSION LOAD TEST VALUES ARE AS FOLLOWS;

2. ALL BOLTS MUST HAVE ICC APPROVAL.

3. DO NOT INSTALL EXPANSION ANCHORS IN CONCRETE CURBS.

4. ALL EXPANSION ANCHORS SHALL BE ONE OF THE FOLLOWING:

HILTI, INC.–KWIK BOLT III–WEDGE ANCHOR–ICC No. ESR–1385 DATED 9/1/2004

MINIMUM TEST VALUES
NORMAL WEIGHT (F'C = 3000 PSI) W/ SPECIAL INSPECTION

ANCHOR

DIA. (IN)	EMBED MIN	TENSION TEST LOAD (LBS)
1/4"	2"	1070
3/8"	2 1/2"	2278
1/2"	3 1/2"	3277
5/8"	4"	4488
3/4"	4 3/4"	6330

03300 CAST–IN–PLACE CONCRETE:
03301 GENERAL:
COMPLY WITH THE FOLLOWING, UON.

- MINIMUM COMPRESSIVE STRENGTH, F'c, AT 28 DAYS:
  - CONCRETE CURB ——— 3000 PSI
  - ALL OTHER CONCRETE ——— 3000 PSI
  - MAXIMUM SLUMP ——— 4 IN
- USE NO CALCIUM CHLORIDE IN ANY CONCRETE.
- SUBMIT CONCRETE MIX DESIGNS AND STRENGTH DATA, WITH CONTRACTOR'S APPROVAL INDICATED, FOR REVIEW PRIOR TO ANY CONCRETE PLACEMENT.

03302 CURING:
CONCRETE SURFACES EXPOSED TO THE ATMOSPHERE WITHIN 7 DAYS OF PLACEMENT SHALL BE PROTECTED AND CURED AS NECESSARY UNTIL SPECIFIED DESIGN STRENGTH HAS BEEN ACHIEVED.

PROJECT RECORD DRAWINGS
6/16/2011
CONTRACTOR: JOHNSTONE MOYER INC.

REVISION	DESCRIPTION	INITIAL	DATE
1	ADDENDUM NO. 1 145 AND 137		12.23.09
2	ADDENDUM NO. 2 145 AND 137		01.07.10
	ASI NO. 2 FIRST FLR MEN'S ROOM		05.07.10
3	ASI NO. 3 AV EQUIP. @ 137, 143, 145		05.20.10
4	RCP 04 MARKERBOARDS		05.20.10
5	RCP 10 ADD DOOR AT SQUAD RM.		09.28.10

ISSUED FOR PROGRESS REVIEW	
ISSUED FOR PLAN CHECK – DSA	07/01/09
ISSUED FOR PERMIT	
ISSUED FOR BID	11/18/09
ISSUED FOR CONSTRUCTION	

SEAL:

CONSULTANT:

INTERACTIVE RESOURCES
ARCHITECTURE • PLANNING • ENGINEERING
117 PARK PLACE
POINT RICHMOND
CALIFORNIA 94801
(510) 236–7435
(FAX) 232–5325
http://www.intres.com

PROJECT:

APPLIED ARTS REMODEL

CONTRA COSTA COLLEGE 2600 MISSION BELL DR. SAN PABLO, CA.

CONTRA COSTA COMMUNITY COLLEGE DISTRICT

SHEET TITLE:

INTERIOR DETAILS

PROJ. NO.	2008–090.01
PREPARATION AND REVIEW	
DRAWN BY	MT
DESIGNER	GYN
PROJ. MGR.	GYN
PEER REVIEW	

SHEET NUMBER:

A9.3

NUMBER: OF:

C:\Users\Mike Mahoney\Desktop\Contra Costa Fine Arts Remodel – Old Work 5-11\CAD files\A9.3 INTERIOR DETAILS.dwg 6/17/2011 11:17 AM Mike Mahoney

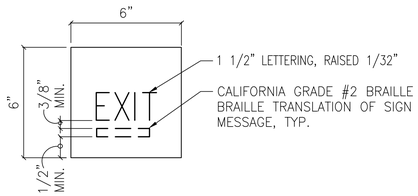

NOTES:

STYLE:	MESSENGER INTERIOR WALL MOUNTED SIGN 6"X6" ADA–READY PANEL
PANEL FINISH:	MIDNIGHT BLUE–SC603
GRAPHIC COLOR:	BONE–SC922
GRAPHIC AND TEXT:	LETTER CHARACTERS TO BE UPPERCASE NEUTRAFACE DISPLAY TT BOLD.

MOUNT SIGN PROMINENTLY ON THE WALL WITH THE CENTER OF THE SIGN 60" ABOVE FINISH FLOOR.

10 EXIT SIGN
SCALE: NTS

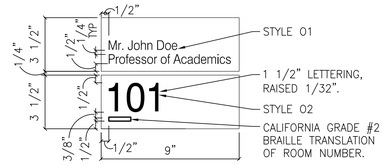

NOTES:
STYLE 01: MESSENGER INTERIOR WALL MOUNTED SIGN (1) 3 1/2"x9" GRAPHICS PANEL
PANEL FINISH: MIDNIGHT BLUE–SC603
GRAPHIC METHOD: LTV SERIES VINYL GRAPHICS
GRAPHIC COLOR: BONE–SC922
GRAPHIC AND TEXT: LETTER CHARACTERS TO BE NEUTRAFACE DISPLAY TT MEDIUM.

STYLE 02: MESSENGER INTERIOR WALL MOUNTED SIGN (1) 3 1/2"x9" ADA–READY PANEL
PANEL FINISH: MIDNIGHT BLUE–SC603
GRAPHIC METHOD: SCREEN PROCESS
GRAPHIC COLOR: BONE–SC922
GRAPHIC AND TEXT: LETTER CHARACTERS TO BE UPPERCASE NEUTRAFACE DISPLAY TT TITLING.

COVER GAP BETWEEN PANELS WITH 1/8" THICK STAINLESS STEEL ACCENT IN MIDNIGHT BLUE SC603 WHICH SLIPS ONTO WALL RAIL AND FILLS REVEAL.
VERIFY TEXT WITH OWNER PRIOR TO CONSTRUCTION.

7

7 OFFICE SIGN
SCALE: NTS

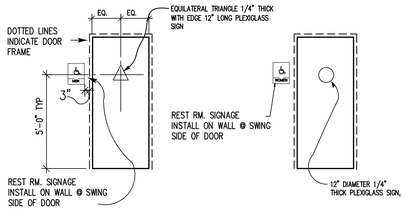

MEN'S TOILET WOMEN'S TOILET

4 TOILET ROOM DOOR SIGNS
SCALE: NTS

1. WHERE PERMANENT IDENTIFICATION IS PROVIDED FOR ROOMS AND SPACES, SIGNS SHALL BE INSTALLED ON THE WALL ADJACENT TO THE LATCH SIDE OF THE DOOR. WHERE THERE IS NO WALL SPACE TO THE LATCH SIDE OF THE DOOR, INCLUDING AT DOUBLE LEAF DOORS, SIGNS SHALL BE PLACED ON THE NEAREST ADJACENT WALL. MOUNTING HEIGHT SHALL BE 60" ABOVE FINISH FLOOR TO THE CENTERLINE OF THE SIGN. MOUNTING LOCATION FOR SUCH SIGNAGE SHALL BE SUCH THAT A PERSON MAY APPROACH WITHIN 3" OF SIGNAGE WITHOUT ENCOUNTERING PROTRUDING OBJECTS OR STANDING WITHIN THE SWING OF THE DOOR.
2. CONTRACTED CALIFORNIA GRADE 2 BRAILLE SHALL BE USED WHENEVER BRAILLE SYMBOLS ARE SPECIFICALLY REQUIRED IN OTHER PORTIONS OF THESE STANDARDS. DOTS SHALL BE 1/10 INCH (2.54 mm) ON CENTERS IN EACH CELL WITH 2/10 INCH (5.08 mm) SPACE BETWEEN CELLS. DOTS SHALL BE RAISED A MINIMUM OF 1/40 (0.635 mm) ABOVE THE BACKGROUND.
3. WHERE REQUIRED BY ADA, ALL SIGN LETTERING TO BE RAISED 1/32" AND SHALL BE 5/8" MIN. TO 2" MAX. IN HEIGHT. USE LARGEST LETTER HEIGHT PRACTICAL. LETTER CHARACTERS TO BE NEUTRAFACE (SANS SERIF) VERIFY ALL TEXT AND TEXT SIZES WITH OWNER PRIOR TO FABRICATION.
4. ALL SIGNS SHALL BE MOUNTED ACCORDING TO MANUFACTURER'S INSTRUCTIONS.
5. ALL INTERIOR SIGNS SHALL BE 1/8" THICK MINIMUM. (UON)
6. ALL EXTERIOR SIGNS SHALL BE 1/4" THICK MINIMUM. (UON)
7. ALL EXTERIOR MOUNTED SIGNS TO BE RATED FOR EXTERIOR USE BY MANUFACTURER.
8. ALL SIGNS ADHESIVELY APPLIED TO GLASS SHALL HAVE AN ADDITIONAL BACKING THE SAME SIZE AND MATERIAL AS THE SIGN ADHESIVELY APPLIED TO THE OTHER SIDE OF THE GLASS.
9. ALL CHARACTERS, SYMBLOLS, AND BACKGROUNDS OF SIGNS TO BE NON–GLARE FINISH.
10. VERIFY ALL ROOM NUMBERS AND TEXT WITH OWNER PRIOR TO FABRICATION.
11. VERIFY ORIENTATION OF DIRECTIONAL ARROWS WITH OWNER.
12. CAMPUS STANDARD SIGN MANUFACTURER: ASI MODULEX
www. asimodulex.com
MANUFACTURER REPRESENTATIVE: CATHERINE FOSS
P.O.BOX 3176
LOS ALTOS, CA 94024
(650) 940– 1354
13. STYLE: MESSENGER SERIES – SEE NOTES FOR MORE INFORMATION.

2 SIGNAGE NOTES
SCALE: NTS

REVISION	DESCRIPTION	INITIAL	DATE
1	ADDENDUM NO. 1 145 AND 137		12.23.09
2	ADDENDUM NO. 2 145 AND 137		01.07.10
	ASI NO. 2 FIRST FLR MEN'S ROOM		05.07.10
3	ASI NO. 3 AV EQUIP. @ 137, 143, 145		05.20.10
4	RCP 04 MARKERBOARDS		05.20.10
5	RCP 10 ADD DOOR AT SQUAD RM.		09.28.10

ISSUED FOR PROGRESS REVIEW	
ISSUED FOR PLAN CHECK – DSA	07/01/09
ISSUED FOR PERMIT	
ISSUED FOR BID	11/18/09
ISSUED FOR CONSTRUCTION	

SEAL:

CONSULTANT:

INTERACTIVE RESOURCES
ARCHITECTURE • PLANNING • ENGINEERING
117 PARK PLACE
POINT RICHMOND
CALIFORNIA 94801
(510) 236–7435
(FAX) 232–5325
http//www.intres.com

PROJECT:

APPLIED ARTS REMODEL

CONTRA COSTA COLLEGE
2600 MISSION BELL DR.
SAN PABLO, CA.

CONTRA COSTA COMMUNITY COLLEGE DISTRICT

SHEET TITLE:

INTERIOR SIGNAGE

PROJ. NO.	2008–090.01
PREPARATION AND REVIEW	
DRAWN BY	MT
DESIGNER	GYN
PROJ. MGR.	GYN
PEER REVIEW	

SHEET NUMBER:

A9.4

NUMBER: OF:

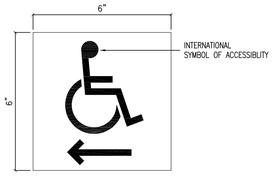

MOUNT SIGN PROMINENTLY ON THE WALL AT 60" ABOVE FINISH FLOOR TO CENTER OF SIGN.

11 DIRECTIONAL ACCESS SIGN
SCALE: NTS

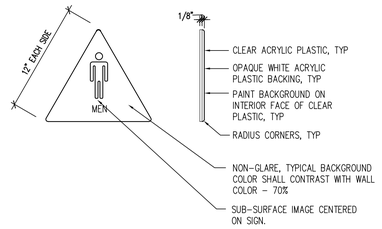

8 MEN'S TOILET DOOR SIGN (EXISTING)
SCALE: 1/4"=1'–0"

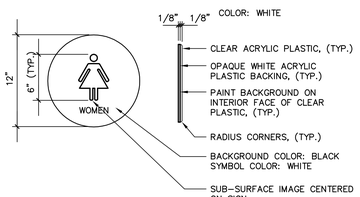

9 WOMEN'S TOILET DOOR SIGN (EXISTING)
SCALE: 1/4"=1'–0"

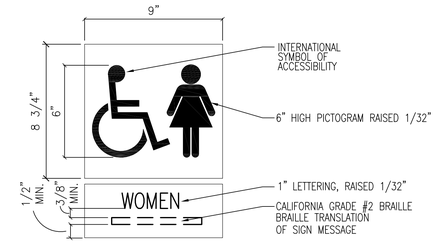

NOTES:

STYLE:	MESSENGER INTERIOR WALL MOUNTED SIGN (1) 8 3/4"x9" GRAPHIC PANEL (1) 2 1/2"x9" ADA–READY PANEL
PANEL FINISH:	MIDNIGHT BLUE–SC603
GRAPHIC METHOD:	SCREEN PROCESS
GRAPHIC COLOR:	BONE–SC922
GRAPHIC AND TEXT:	LETTER CHARACTERS TO BE UPPERCASE NEUTRAFACE DISPLAY TT BOLD.

MOUNT SIGN PROMINENTLY ON THE WALL AT 60" ABOVE FINISH FLOOR TO THE CENTER OF SIGN.
COVER GAP BETWEEN PANELS WITH 1/8" THICK STAINLESS STEEL ACCENT IN MIDNIGHT BLUE SC603 WHICH SLIPS ONTO WALL RAIL AND FILLS REVEAL.

5 WOMEN'S TOILET ROOM SIGN
SCALE: NTS

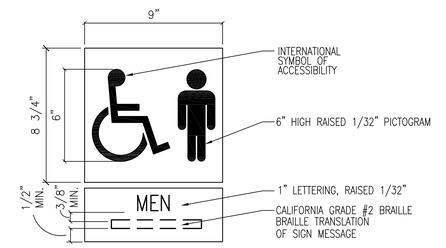

NOTES:

STYLE:	MESSENGER INTERIOR WALL MOUNTED SIGN (1) 8 3/4"x9" GRAPHIC PANEL (1) 2 1/2"x9" ADA–READY PANEL
PANEL FINISH:	MIDNIGHT BLUE–SC603
GRAPHIC METHOD:	SCREEN PROCESS
GRAPHIC COLOR:	BONE–SC922
GRAPHIC AND TEXT:	LETTER CHARACTERS TO BE UPPERCASE NEUTRAFACE DISPLAY TT BOLD.

MOUNT SIGN PROMINENTLY ON THE WALL AT 60" ABOVE FINISH FLOOR TO THE CENTER OF SIGN.
COVER GAP BETWEEN PANELS WITH 1/8" THICK STAINLESS STEEL ACCENT IN MIDNIGHT BLUE SC603 WHICH SLIPS ONTO WALL RAIL AND FILLS REVEAL.

6 MEN'S TOILET ROOM SIGN
SCALE: NTS

PROJECT RECORD DRAWINGS
6/16/2011
CONTRACTOR: JOHNSTONE MOYER INC.

© C:\Users\Mike Mahoney\Desktop\Desktop Contra Costa Fine Arts Remodel – CMS Work 5-11\CAD files\A9.4 SIGNAGE.dwg, 6/17/2011 11:18 AM Mike Mahoney

FIXTURE SCHEDULE

TYPE	MANUFACTURER AND CATALOG NUMBER	LAMP QUANTITY AND TYPE	WATTAGE	DESCRIPTION	WEIGHT	MOUNTING DETAIL
A	DAYBRITE 2P3G-S-432DIM-48-AL-120	4 – FO32T8/835 120V	110W	2'X4' RECESSED FLUOR. WITH SEMI-SPECULAR PARABOLIC 48-CELL LENS, 4-LAMP CROSS SECTION. PROVIDE WITH ELECTRONIC DIMMABLE BALLAST	.	.
AE	DAYBRITE 2P3G-S-432DIM-48-AL-120-EM	4 – FO32T8/835 120V	110W	SAME AS TYPE 'A' EXCEPT WITH EMERGENCY BATTERY PACK	.	.
A1	DAYBRITE 2P3G-S-332DIM-38-AL-120	3 – FO32T8/835 120V	90W	2'X4' RECESSED FLUOR. WITH SEMI-SPECULAR PARABOLIC 32-CELL LENS, 3-LAMP CROSS SECTION. PROVIDE WITH ELECTRONIC DIMMABLE BALLAST	.	.
A1E	DAYBRITE 2P3G-S-332DIM-38-AL-120-EM	3 – FO32T8/835 120V	90W	SAME AS TYPE 'A1' EXCEPT WITH EMERGENCY BATTERY PACK	.	.
A2	DAYBRITE 2P3G-S-232-26-AL-120	2 – FO32T8/835 120V	60W	2'X4' RECESSED FLUOR. WITH SEMI-SPECULAR PARABOLIC 24-CELL LENS, 2-LAMP CROSS SECTION. PROVIDE WITH ELECTRONIC BALLAST		.
A2E	DAYBRITE 2P3G-S-232-26-AL-120-EM	2 – FO32T8/835 120V	90W	SAME AS TYPE 'A2' EXCEPT WITH EMERGENCY BATTERY PACK	.	.
B	DAYBRITE 2DPG-232-FS12-120	2 – FO32T8/835 120V	58W	2'X4' RECESSED FLUOR. WITH ARYYLIC LENS AND ELECTRONIC BALLAST	.	.
BE	DAYBRITE 2DPG-232-FS12-120-EM	2 – FO32T8/835 120V	58W	SAME AS TYPE 'B' EXCEPT WITH EMERGENCY BATTERY PACK	.	.
C	DAYBRITE VPF124-232-ELECT-120-CP-BLK-JP	2 – FO32T8/835 120V	58W	2'X4' SURFACE FLUOR. VANDAL RESISTANT LENS AND ELECTRONIC BALLAST	.	.
CE	DAYBRITE VPF124-232-ELECT-120-CP-BLK-JP-EM	2 – FO32T8/835 120V	58W	SAME AS TYPE 'C' EXCEPT WITH EMERGENCY BATTERY PACK		.
D	DAYBRITE 8UC-1-25/32T8/835-D-120	XX – FO32T8/835 120V	58W	UNDERCABINET FLUORESCENT FIXTURES WITH ELECTRONIC BALLAST. LENGTH AS SHOWN ON DRAWINGS		.
E	EVENLITE SLV-20G	TRITIUM GAS	NON ELECTRIC	SELF-LUMINOUS TRITIUM EXIT SIGN WITH UNIVERSAL ARROWS MOUNTING. NUMBER OF FACES AS SHOWN ON DRAWINGS		.
F	DAYBRITE 2AVG-232-PMW-120	2 – FO32T8/835 120V	58W	2'X4' RECESSED FLUOR. WITH PERFORATED METAL LOUVER AND ELECTRONIC BALLAST		.
FE	DAYBRITE 2AVG-232-PMW-120-EM	2 – FO32T8/835 120V	58W	SAME AS TYPE 'F' EXCEPT WITH EMERGENCY BATTERY PACK		.
						.

GENERAL ELECTRICAL NOTES

1. TRADE CONTRACTOR IS TO PROVIDE LABOR, MATERIALS, TRANSPORTATION, EQUIPMENT, RELATED HAND TOOLS, SPECIAL AND OCCASIONAL SERVICES TO CONSTRUCT AND INSTALL THE COMPLETE ELECTRICAL SYSTEM AS SPECIFIED AND SHOWN ON THE PLANS.
2. MOUNTING HEIGHTS SHOWN (I.E. +48") ARE FROM FINISHED FLOOR TO CENTERLINE OUTLET. ALL MOUNTING HEIGHTS SHALL BE AS SHOWN ON SYMBOL LIST UNLESS OTHERWISE NOTED ON DRAWINGS.
3. BONDING JUMPERS SHALL BE INSTALLED TO INSURE CONTINUITY WHERE CONDUIT CONNECTIONS AT CONCENTRIC KNOCKOUTS ARE TO SERVE AS A GROUND.
4. PROVIDE GREEN THWN COPPER GROUND WIRE FROM PANELBOARD GROUND BUS TO ALL MECHANICAL EQUIPMENT.
5. THE ELECTRICIAN SHALL CHECK THE TIGHTNESS OF ALL PANELBOARD BUSES AND CIRCUIT BREAKER LUGS. COMPLETELY VACUUM AND CLEAN INTERIOR OF EQUIPMENT PRIOR TO PLACING SERVICE INTO OPERATION.
6. ALL EQUIPMENT SHALL BE U.L. LISTED AND INSTALLED AS PER LISTING OR LABELING (I.E. MAX. FUSE SIZES MEAN FUSE PROTECTION REQUIRED).
7. REFER TO ARCHITECTURAL DRAWINGS FOR ACTUAL LAYOUTS OF LIGHTING FIXTURES IN CEILING.
8. ALL ELECTRICAL CONDUIT AND ELECTRICAL EQUIPMENT SHALL BE BRACED OR ANCHORED PER CBC 2001 TO RESIST HORIZONTAL FORCES AS REQUIRED BY SECTION 1632A AND TABLE 16A-O, TITLE 24, CALIFORNIA ADMINISTRATIVE CODE, PART 2. WHERE ANCHORAGE ANCHORAGE DETAILS ARE NOT SHOWN ON DRAWINGS THE FIELD INSTALLATION SHALL BE SUBJECT TO THE APPROVAL OF THE STRUCTURAL ENGINEER .
9. TRADE CONTRACTOR SHALL BE RESPONSIBLE FOR DAMAGES TO ALL WALLS, FLOORS AND CEILINGS INCURRED DURING ELECTRICAL CONSTRUCTION. IF DAMAGE OCCURS DURING ELECTRICAL CONSTRUCTION, THE TRADE CONTRACTOR SHALL COORDINATE TO PATCH, PAINT AND REPAIR TO MATCH EXISTING CONDITIONS.
10. COORDINATE EQUIPMENT LOCATIONS AND ELECTRICAL REQUIREMENTS OF ALL EQUIPMENT REQUIRING ELECTRICAL HOOK-UP WITH CONTRACTOR RESPONSIBLE FOR PROVIDING EQUIPMENT AND EQUIPMENT MANUFACTURER DATA SHEETS.
11. COORDINATE ELECTRICAL OUTLET LOCATIONS WITH ARCHITECTURAL ELEVATIONS (I.E. CABINETRY). AVOID ALL COUNTER SUPPORTS, AND LOCATIONS BEHIND INACCESSIBLE FIXED CABINETS.
12. UPON COMPLETION OF THE INSTALLATION OF THE FIRE PROTECTIVE SIGNALING EQUIPMENT, A SATISFACTORY TEST OF THE ENTIRE SYSTEM SHALL BE MADE IN THE PRESENCE OF THE LOCAL FIRE AUTHORITY WITH THE DSA INSPECTOR OF RECORD (IOR).
13. FLUORESCENT LIGHT FIXTURES SHALL HAVE CERTIFIED LUMINAIRE/BALLASTS PER STATE OF CALIFORNIA BUILDING ENERGY STANDARDS 2-5314(a).
14. ALL CORRIDOR AND EXTERIOR WALL PENETRATIONS FOR PIPES, CONDUITS, ETC., IN WALLS REQUIRING PROTECTED OPENINGS SHALL BE FIRE STOPPED. FIRE STOP MATERIAL SHALL BE A TESTED ASSEMBLY APPROVED BY THE CALIFORNIA STATE FIRE MARSHAL.
15. ELECTRICAL CONTRACTOR SHALL REVIEW MECHANICAL AND PLUMBING CONTRACT DRAWINGS AND VERIFY ALL MECHANICAL EQUIPMENT LOCATIONS, MOTOR SIZES AND CONTROL WIRING REQUIREMENTS WITH MECHANICAL CONTRACTOR AND MECHANICAL EQUIPMENT SUPPLIERS AND MANUFACTURERS PRIOR TO INSTALLATION OF ELECTRICAL CONNECTIONS.
16. RECEPTACLES SHALL NOT BE INSTALLED BACK TO BACK AND SHALL BE SPACED 24" APART. WHERE RECEPTACLES CANNOT BE SPACED 24" APART, PROVIDE 3M FIRE RATED PUTTY PADS TO MATCH WALL FIRE RATING.
17. PROVIDE AN ISOLATED GROUND WIRE IN ADDITION TO NORMAL EQUIPMENT GROUND IN ALL COMPUTER DEDICATED CIRCUITS.
18. ALL CONTROL DEVICES TO BE USED BY THE OCCUPANT OF THE ROOM OR AREA SHALL BE INSTALLED AT A MINIMUM OF 36" C/L, TO A MAXIMUM OF 48" C/L FROM THE FINISHED FLOOR.
19. IN ACCESSIBLE ATTIC/CEILING SPACES ALL LOW VOLTAGE SYSTEMS (FIRE ALARM, DATA, AND TV) SHALL BE RUN IN SEPERATE BUNDLES ON J-HOOKS AND SHALL BE SECURED EVERY 4 FEET, WHERE RUN IN NONE ACCESSIBLE SPACES, RUN IN SEPERATE CONDUIT. CATV CALBLES SHALL BE RUN WITH DATA CABLES.
20. ELECTRICAL DRAWINGS ARE DIAGRAMMATIC AND ALTHOUGH THE SIZE AND LOCATIONS OF EQUIPMENT IS SHOWN TO SCALE WHEREVER POSSIBLE, CONTRACTOR SHALL MAKE USE OF MANUFACTURER'S OR OWNER'S DATA AVAILABLE AND/OR VERIFY DATA IN THE FIELD FOR PROVIDING AND INSTALLING CORRECT CABLE LENGTHS.
21. ALL EQUIPMENT MUST BE LISTED, LABELED, OR CERTIFIED BY A NATIONAL RECOGNIZED TESTING LABORATORY (NRTL).
22. ELECTRICAL CONTRACTOR SHALL COORDINATE WITH ALL TRADES TO KEEP ELECTRICAL ROOMS EXCLUSIVELY DEDICATED TO PANELBOARDS, SIGNAL AND OTHER ELECTRICAL EQUIPMENT. NO PLUMBING, PIPING OR MECHANICAL DUCTS SHALL RUN OVER ELECTRICAL PANEL OR OTHER ELECTRICAL EQUIPMENT PER N.E.C. 110-26.
23. AIR SEAL ALL CONDUIT PENETRATION THRU RAISED FLOOR SYSTEM TO ARCHITECT'S APPROVAL.

ELECTRICAL SYMBOL LIST

RPS	ROMOTE POWER SUPPLY
GFI	GROUND FAULT INTERRUPTER
GFP	GROUND FAULT PROTECTION
IC	INTERCOM
IDF	INTERMEDIATE DISTRIBUTION FRAME
IG	ISOLATED GROUND
MDF	MAIN DISTRIBUTION FRAME
MT	EMPTY CONDUIT WITH PULL CORD
PB	PULL BOX
PIV	POST INDICATOR VALVE
TTB	TELEPHONE TERMINAL BOARD
WP	WEATHERPROOF
UG	UNDERGROUND
U.O.N.	UNLESS OTHERWISE NOTED
VIF	VERIFY IN FIELD
XFMR	TRANSFORMER
KP	INTRUSION ALARM KEYPAD; J-BOX WITH 1/2" MT TO ACCESSIBLE CEILING SPCAE
MM	INTRUSION ALARM MOTION SENSOR; J-BOX WITH 1/2" MT TO ACCESSIBLE CEILING SPCAE
GB	INTRUSION ALARM GLASS BREAK SENSOR; J-BOX WITH 1/2" MT TO ACCESSIBLE CEILING SPCAE
DC	INTRUSION ALARM DOOR CONTACT; J-BOX WITH 1/2" MT TO ACCESSIBLE CEILING SPCAE
IAP	INTRUSION ALARM PANEL; J-BOX WITH WITH 1/2" MT TO ACCESSIBLE CEILING SPCAE
A 2/32	FIXTURE TAG – LETTER DENOTES TYPE, NUMBERS INDICATE LAMP QUANTITY AND WATTAGE
1 E-1	REFERS TO DETAIL NO. 1 ON DRAWING E-1
1	NUMBERED ELECTRICAL NOTE
AC 1	MECHANICAL TAG – LETTER DENOTES TYPE, NUMBER DENOTES EQUIPMENT NUMBER

	FLUORESCENT LIGHT FIXTURE AND OUTLET – SEE FIXTURE SCHEDULE
	EMERGENCY LIGHT FIXTURE WITH BATTERY PACK – SEE FIXTURE SCHEDULE
	WALL MOUNTED LIGHT FIXTURE – SEE FIXTURE SCHEDULE
	POLE MOUNTED FIXTURE, SEE SCHEDULE
	EXIT SIGN – WALL OR CEILING MOUNT WITH DIRECTIONAL ARROWS WHERE INDICATED SEE FIXTURE SCHEDULE. SHADE INDICATED INDICATES FACE OF SIGN
	EMERGENCY LIGHT FIXTURE – SEE FIXTURE SCHEDULE
S	1PST LIGHT SWITCH +48" U.O.N.
S_3	3-WAY LIGHT SWITCH, +48" U.O.N.
S_4	4-WAY LIGHT SWITCH, +48" U.O.N.
S_K	KEYED LIGHT SWITCH +48" U.O.N.
S_P	IPST LIGHT SWITCH WITH PILOT LIGHT, +48" U.O.N.
OS	WALL MOUNTED DUAL RELAY PIR OCCUPANCY SENSOR WITH SEPARATE SWITCHES FOR BI-LEVEL LIGHTING CONTROL
OS	CEILING MOUNTED PIR OCCUPANCY OCCUPANCY SENSOR WITH POWER PACK AS REQUIRED
	20A, 125V, 3W GROUNDING TYPE DUPLEX RECEPTACLE, +18" U.O.N.
	20A, 125V, 3W GROUNDING TYPE, FOURPLEX RECEPTACLE, +18" U.O.N.
	20A, 125V DUPLEX GFI RECEPTACLE, +18" U.O.N.
	20A, 125V, 4W DUPLEX RECEPTACLE, CEILING MOUNTED
	SPECIAL RECEPTACLE IN FLOOR BOX AS REQUIRED BY EQUIPMENT SPECIFIED
	SPECIAL RECEPTACLE AS REQUIRED BY EQUIPMENT SPECIFIED
	DUPLEX RECEPTACLE 20A, 120V, IN FLOOR BOX
	TEL/DATA OUTLET WITH 4 11/16" X 2 1/8" WITH DOUBLE-GANG MUD RING. PROVIDE (1) 1-1/4" EMT CONDUIT STUBBED TO UNDER RAISED FLOOR SPACE.
	TEL/DATA OUTLET WITH 4 11/16" X 2 1/8" WITH SINGLE-GANG MUD RING MOUNTED TO BOTTOM OF CEILING SLAB. PROVIDE (1) 1 1/4" EMT CONDUIT STUBBED TO UNDER RAISED FLOOR SPACE.
	TEL/DATA OUTLET WITH 4 11/16" X 4 11/16" X 2 1/8" WITH SINGLE-GANG MUD RING MOUNTED TO BOTTOM OF CEILING SLAB. PROVIDE (1) 1 1/4" EMT CONDUIT STUBBED VIA WALL TO UNDER RAISED FLOOR SPACE.
	COMBINATION TELECOM/POWER FLOOR BOX WITH (1) TELECOM COMPARTMENT AND FOUR (4) DUPLEX RECEPTACLE, SEE SPECS.
TV	CABLE TELEVISION OUTLET, +80" U.O.N., COMPLETE WITH F CONNECTOR, CONDUIT AND CATV CABLE, RG-6 TO IDF/MDF. PROVIDE DOUBLE GANG BOX WITH SINGLE MUD RING
	CLOCK OUTLET
J	JUNCTION BOX, CEILING OR WALL MOUNTED – SIZED PER CODE
J	JUNCTION BOX IN FLOOR BOX
FACP	FIRE ALARM CONTROL PANEL (FACP)
RPS	FIRE ALARM REMOTE POWER SUPPLY
ANN	FIRE ALARM ANNUNCIATOR PANEL (ANN)
F	FIRE ALARM MANUAL PULL STATION, +48" U.O.N.
SD	FIRE ALARM SMOKE DETECTOR
SR	FIRE ALARM SMOKE DETECTOR WITH RELAY
HD	135° FIXED HEAT DETECTOR
DD	DUCT SMOKE DETECTOR
H	FIRE ALARM MINI HORN/STROBE, CANDELA AS NOTED, CEILING OR WALL MOUNTED; NO NUMBER INDICATES 15cd
WP	FIRE ALARM HORN WITH WEATHER PROOF BACK BOX
S	FIRE ALARM STROBE, CANDELA AS NOTED, CEILING OR WALL MOUNTED NO NUMBER INDICATES 15cd
M	ADDRESSABLE MONITOR MODULE
CR	ADDRESSABLE CONTROL RELAY
FSD	FIRE SMOKE DAMPER
DH	ELECTROMAGNETIC DOOR RELEASE
TS	TAMPER SWITCH
FS	FLOW SWITCH
EOL	END OF LINE RESISTOR
	DISCONNECT SWITCH – NON-FUSED, WEATHERPROOF FOR OUTDOORS, SIZED PER MANUFACTURER'S REQUIREMENTS
	DISCONNECT SWITCH – FUSED AS REQUIRED, WEATHERPROOF FOR OUTDOORS, SIZED PER MANUFACTURER'S REQUIREMENTS
	COMBINATION MOTOR STARTER WITH FUSIBLE DISCONNECT SWITCH AND HAND-OFF AUTO SWITCH IN COVER, NEMA SIZE AS SPECIFIED WITH NEMA 1 ENCLOSURE, ALLEN BRADLEY OR APPROVED EQUAL.
	MOTOR CONNECTION
S^T	THERMAL OVERLOAD SWITCH
SM	MANUAL MOTOR STARTING SWITCH, HORSE POWER RATED WITH OVERLOADS
TMH	TELEPHONE BELOW GRADE MANHOLE, CHRISTY PTS1730
PMH	POWER BELOW GRADE MANHOLE, CHRISTY N52
	BRANCH CIRCUIT CONDUIT CONCEALED IN WALL OR CEILING
	BRANCH CIRCUIT CONDUIT CONCEALED UNDER FLOOR OR UNDERGROUND
	HOMERUN TO PANELBOARD OR OTHER TERMINATION POINT
S	1~4" CONDUIT TO SECURITY CAMERA SERVER
A	TO INTRUSION ALARM PANEL
C	INTERCOM CLOCK/SPEAKER TO SIGNAL TERMINAL CABINET
D	DATA CABLES TO BUILDING IDF OR MDF
	STUB CONDUIT TO ACCESSIBLE SPACE
	CONDUIT UP
	CONDUIT DOWN
	ANY BRANCH CIRCUIT CONDUIT SHALL BE MINIMUM 3/4"C – 2#12, 1#12 GREEN GROUND UNLESS OTHERWISE NOTED. FOR A GREATER NUMBER OF #12 WIRES: (= 3/4"C – 3#12, 1#12G) ETC. FOR WIRE SIZES OTHER THAN #12: (#8 = 3#8, 1#12G), (GROUND SIZED PER CEC, IN CODE SIZE CONDUIT) ETC.
(#8)	INDICATES #8 CONDUCTORS ALL THROUGHOUT THE CIRCUIT
GR	COPPER CLAD GROUND ROD 3/4" DIA. X 8' MINIMUM
ANN	ANNUNCIATOR
CL	CENTERLINE
CU	COPPER
FACP	FIRE ALARM CONTROL PANEL
FATC	FIRE ALARM TERMINAL CABINET

PROJECT RECORD DRAWINGS
6/16/2011
CONTRACTOR: GRAY ELECTRIC

ELECTRICAL DRAWING INDEX

DWG. NO.	DESCRIPTION
E0.1	SYMBOLS, NOTES, DETAILS, SCHEDULES
E0.2	DETAILS AND PANEL SCHEDULES
E1.1	FIRST FLOOR DEMOLITION PLAN
E1.2	SECOND FLOOR DEMOLITION PLAN
E2.1	FIRST FLOOR LIGHTING PLAN
E2.2	SECOND FLOOR LIGHTING PLAN
E3.1	FIRST FLOOR POWER AND SIGNAL PLAN
E3.2	SECOND FLOOR POWER AND SIGNAL PLAN
E4.1	FIRST FLOOR FIRE ALARM PLAN
E4.2	SECOND FLOOR FIRE ALARM PLAN
E4.3	FIRE ALARM NOTES AND DETAILS
E4.4	FIRE ALARM DIAGRAMS, CALCS AND NOTES

PROGRESS SET

ELECTRICAL SYMBOL LITS, NOTES, AND

FILE: F:\2009\09-010_CCC Arts\09010E0.1.dwg,DWG 05/05/09 at 15:12

E0.1

Xref .\09010TB.dwg

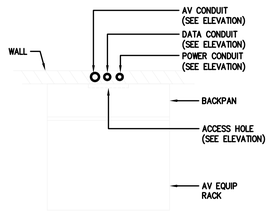

11A PLAN VIEW

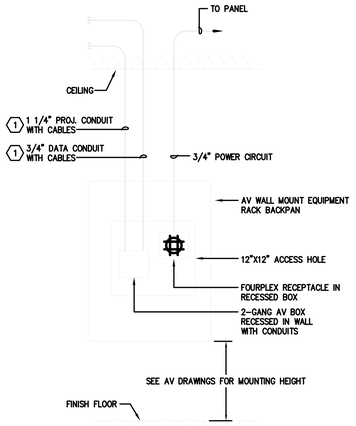

11b ELEVATION

SHEET NOTES

1. STUB TO ACCESSIBLE CEILING SPACE.

11 TYPICAL AV WALL MOUNTED EQUIPMENT RACK
NOT TO SCALE

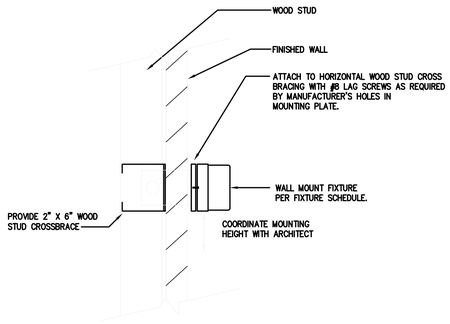

8 WALL MOUNTED FIXTURE MOUNTING DETAIL
NOT TO SCALE

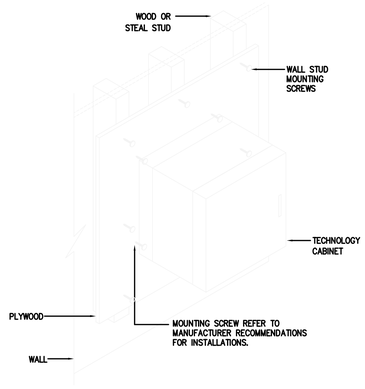

9 CABINET MOUNTING DETAIL
NOT TO SCALE

10 TYPICAL SPEAKER CONDUIT DETAIL
NOT TO SCALE

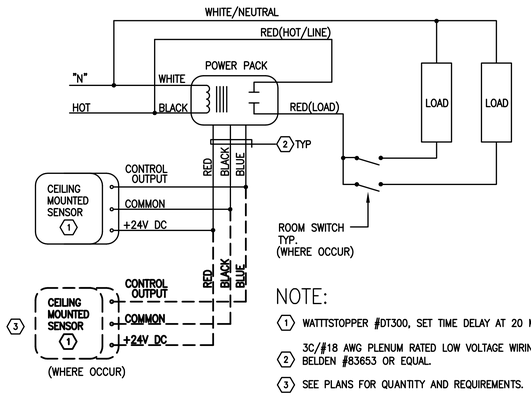

NOTE:

1. WATTTSTOPPER #DT300, SET TIME DELAY AT 20 MIN.
2. 3C/#18 AWG PLENUM RATED LOW VOLTAGE WIRING, BELDEN #83653 OR EQUAL.
3. SEE PLANS FOR QUANTITY AND REQUIREMENTS.

5 OCCUPANCY SENSOR WIRING DIAGRAM
NO SCALE

GENERAL NOTE:

BACKBOARD INSTALLATION:

1. FOR WOOD STUD PROVIDE A MINIMUM 3/8" DIAMETER BOLTS/SCREW WITH A 1" WASHER SPACED NOT MORE THEN 18" APART.
2. FOR STEAL STUD PROVIDE A MINIMUM 3/16" DIAMETER BOLTS/SCREW WITH A 1" WASHER SPACED NOT MORE THEN 18" APART.

A. UNSWITCHED FIXTURE

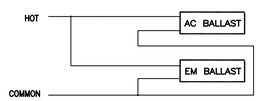

B. SWITCHED FIXTURE

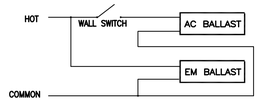

6 EMERGENCY BALLAST WIRING DIAGRAM
NO SCALE

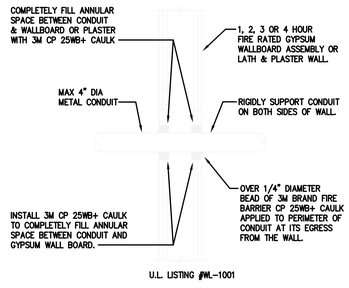

7 CONDUIT PENETRATION DETAIL
NOT TO SCALE

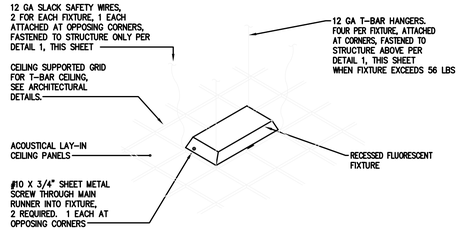

1 RECESSED FLUORESCENT FIXTURE MOUNTING DETAIL FOR T-BAR CEILING
NOT TO SCALE

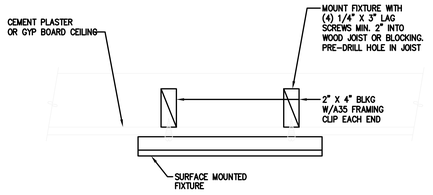

2 SURFACE MOUNTED FIXTURE DETAIL
NOT TO SCALE

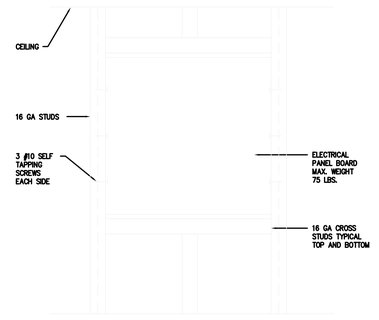

3 RECESSED PANELBOARD MOUNTING DETAIL
NOT TO SCALE

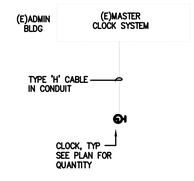

4 TYPICAL CLOCK SYSTEM RISER DIAGRAM
SCALE: NONE

PROJECT RECORD DRAWINGS
6/16/2011
CONTRACTOR: GRAY ELECTRIC

REVISION	DESCRIPTION	INITIAL	DATE
ISSUED FOR PROGRESS REVIEW			
ISSUED FOR PLAN CHECK – DSA			07/01/09
ISSUED FOR PERMIT			
ISSUED FOR BID			
ISSUED FOR CONSTRUCTION			

SEAL:

REGISTERED PROFESSIONAL ENGINEER
JOSE L. ME
No. E 17369
Exp. 9-30-10
ELECTRICAL
STATE OF CALIFORNIA

CONSULTANT:

WHM INCORPORATED
Engineering Consultants
1605 School Street
Moraga, CA 94556
Tel (925)376-2802 • Fax (925)376-2804
cad@whminc.com

09-010

INTERACTIVE
RESOURCES
ARCHITECTURE • PLANNING • ENGINEERING
117 PARK PLACE
POINT RICHMOND
CALIFORNIA 94801
(510) 236-7435
(FAX) 232-5325
http//www.intres.com

PROJECT:

APPLIED ARTS REMODEL

CONTRA COSTA COLLEGE
2600 MISSION BELL DR.
SAN PABLO, CA.

CONTRA COSTA COMMUNITY COLLEGE DISTRICT

SHEET TITLE:

ELECTRICAL DETAILS

PROJ. NO.	2008-090.01
	PREPARATION AND REVIEW
DRAWN BY	DM/LC
DESIGNER	JWE
PROJ. MGR.	
PEER REVIEW	

SHEET NUMBER:

E0.2

NUMBER: OF:

C:\USERS\MIKE MAHONEY\DESKTOP\CONTRA COSTA FINE ARTS REMODEL - CAD WORK 5-11\CAD FILES\092809 DSA PROGRESS\090105D2.2.DWG
06/17/11 12:20:59 PM

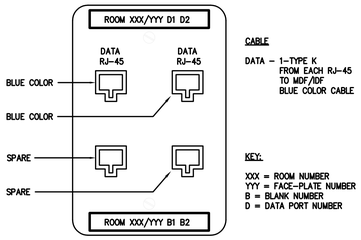

6 TYPICAL CLASSROOM DATA OUTLET

NOT TO SCALE

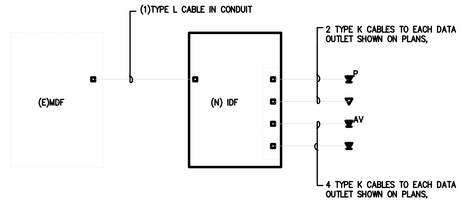

2 TYPICAL DATA CONNECTION DIAGRAM

NOT TO SCALE

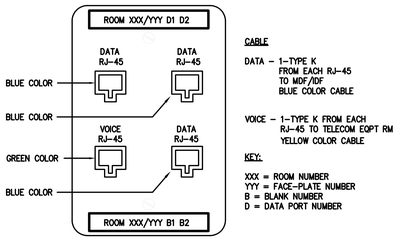

3 TYPICAL ADMIN VOICE/DATA OUTLET

NOT TO SCALE

20

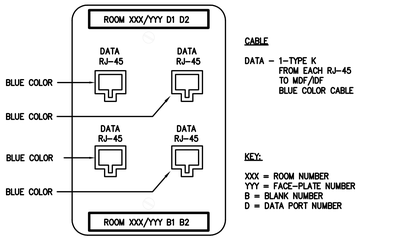

4 TYPICAL AV EQUIPMENT RACK DATA OUTLET

NOT TO SCALE

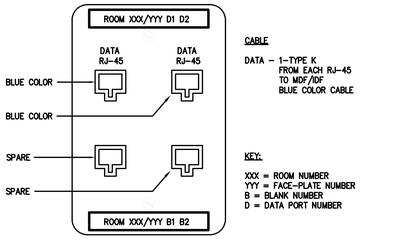

5 TYPICAL PROJECTOR DATA OUTLET

NOT TO SCALE

(E)PANEL-2P2 — ROOM 252

DESCRIPTION	LOAD (KVA) LTG	REC	RES	MOT.	BRK	CIR#	SN	BRK	CIR#	LOAD (KVA) LTG	REC	RES	MOT.	DESCRIPTION
(E)		0.20			20/1	1	*	2	20/1					(E)
(E)		0.20			20/1	3	*	4	20/1					(E)
(E)		0.20			20/1	5	*	6	20/1					(E)
(E)		0.20			20/1	7	*	8	20/1					(E)
(E)		0.54			20/1	9	*	10	20/1					(E)
(E)		0.54			20/1	11	*	12	20/1					(E)
(E)		0.54			20/1	13	*	14	20/1					(E)
(E)		0.40			20/1	15	*	16	20/1					(E)
(E)					20/1	17	*	18	20/1					(E)
(E)					20/1	19	*	20	20/1		0.72			(N)REC - RM 252B - 252J
(E)					20/1	21	*	22	20/1		0.72			(N)REC - RM 252B - 252J
(E)					20/1	23	*	24	20/1		0.72			(N)REC - RM 252B - 252J
(E)					20/1	25	*	26	20/1		0.72			(N)REC - RM 252B - 252J
(E)					20/1	27	*	28	20/1		0.72			(N)REC - RM 252B - 252J
(E)					20/1	29	*	30	20/1		0.72			(N)REC - RM 252B - 252J
(E)					20/1	31	*	32	20/1					(E)
(E)					20/1	33	*	34	20/1					(E)
SPARE					20/1	35	*	36	20/1					(E)
PROJ/AV EQPT 250			0.80		20/1	37	*	38	20/1					(E)
PROJ/AV EQPT 251			0.80		20/1	39	*	40	20/1					(E)
COPIER MATH DEPT 252			1.00		20/1	41	*	42	20/1					S P A R E
TOTAL		2.82	2.6								4.32			

VOLTS: 120/208,3ø,4W MTG: FLUSH
TYPE: NQOD
MAINS: 225A MLO
TOTAL KVA: 9.74

(E)PANEL-2P3 — ROOM 252

DESCRIPTION	LOAD (KVA) LTG	REC	RES	MOT.	BRK	CIR#	SN	BRK	CIR#	LOAD (KVA) LTG	REC	RES	MOT.	DESCRIPTION
(E)					20/1	1	*	2	20/1					(E)
(E)					20/1	3	*	4	20/1					(E)
(E)					20/1	5	*	6	20/1					(E)
(E)					20/1	7	*	8	20/1					(E)
(E)					20/1	9	*	10	20/1					(E)
(E)					20/1	11	*	12	20/1					(E)
(E)					20/1	13	*	14	20/1					(E)
(N)REC - RM251, 252		0.72			20/1	15	*	16	20/1					(E)
(N)REC - RM251, 252		0.72			20/1	17	*	18	20/1					(E)
(N)REC - RM251, 252		0.72			20/1	19	*	20	20/1					(E)
(N)REC - RM251, 252		0.72			20/1	21	*	22	20/1					(E)
(N)REC - RM251, 252		0.72			20/1	23	*	24	20/1					(E)
(E)					20/1	25	*	26	20/1					(E)
(E)					20/1	27	*	28	20/1					(E)
(E)					20/1	29	*	30	20/1					(E)
(E)					20/1	31	*	32	20/1					(E)
(E)					20/1	33	*	34	20/1					(E)
SPARE					20/1	35	*	36	20/1					(E)
					20/1	37	*	38	20/1					(E)
					20/1	39	*	40	20/1					(E)
					20/1	41	*	42	20/1			0.30		FIRE SMOKE DAMPER
TOTAL		3.6										0.3		

VOLTS: 120/208,3ø,4W MTG: FLUSH
TYPE: NQOD
MAINS: 225A MLO
TOTAL KVA: 3.9

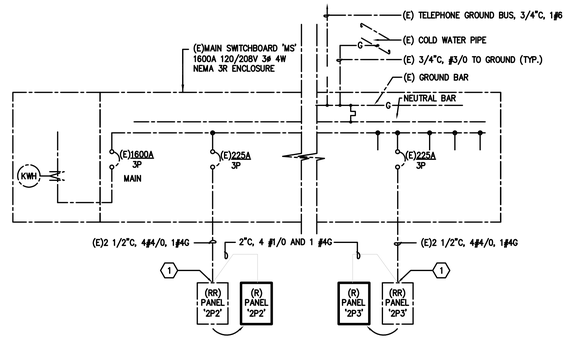

NOTE:

1 INTERCEPT EXISTING FEEDER AND EXTED TO NEW PANEL LOCATION. SEE ALSO E1.1 AND E3.2. CONNECT COMPLETE.

1 PARTIAL POWER SINGLE LINE DIAGRAM

NOT TO SCALE

PROJECT RECORD DRAWINGS
6/16/2011
CONTRACTOR: GRAY ELECTRIC

REVISION	DESCRIPTION	INITIAL	DATE
	ISSUED FOR PROGRESS REVIEW		
	ISSUED FOR PLAN CHECK - DSA		07/01/09
	ISSUED FOR PERMIT		
	ISSUED FOR BID		
	ISSUED FOR CONSTRUCTION		

SEAL:

REGISTERED PROFESSIONAL ENGINEER — JOSE L. MENDOZA — No. E 17369 Exp. 9-30-10 — ELECTRICAL — STATE OF CALIFORNIA

CONSULTANT:

WHM INCORPORATED
Engineering Consultants
1605 School Street
Moraga, CA 94556
Tel (925)376-2902 • Fax (925)376-2904
cad@whminc.com
09-010

INTERACTIVE RESOURCES
ARCHITECTURE • PLANNING • ENGINEERING
117 PARK PLACE
POINT RICHMOND
CALIFORNIA 94801
(510) 236-7435
(FAX) 232-5325
http//www.intres.com

PROJECT:

APPLIED ARTS REMODEL

CONTRA COSTA COLLEGE
2600 MISSION BELL DR.
SAN PABLO, CA.

CONTRA COSTA COMMUNITY COLLEGE DISTRICT

SHEET TITLE:

ELECTRICAL PANEL SCHEDULE AND SINGLE LINE DIAGRAMS

PROJ. NO.	2008-090.01
	PREPARATION AND REVIEW
DRAWN BY	DM/LC
DESIGNER	JWE
PROJ. MGR.	
PEER REVIEW	

SHEET NUMBER:

E0.3

NUMBER: OF:

06/17/11 12:21:36 PM C:\USERS\MIKE MAHONEY\DESKTOP\CONTRA COSTA FINE ARTS REMODEL - CAD WORK 5-11\CAD FILES\092809 DSA PROGRESS\090103D3.DWG

GENERAL DEMOLITION NOTES

1. NO ACCURATE AS-BUILT DRAWINGS AVAILABLE. CONTRACTOR TO VERIFY IN FIELD ALL EXISTING CONDITION AND MAKE NECESSARY ADJUSTMENT TO FOLLOW THIS DESIGN.
2. ALL EXISTING ITEMS NOT SHOWN ARE TO REMAIN OPERATIONAL.
3. REMOVE ALL ASSOCIATED CONDUIT AND WIRING TO THE NEAREST BOX OR CONNECTION POINT FROM ALL THE OUTLETS THAT ARE TO BE DEMOLISHED/REMOVED. LEAVE ALL
4. OTHER EXISTING OUTLET IN OPERATION WHENEVER AFFECTED WITH THIS WORK.
5. SAVE ALL EXISTING CIRCUITS FROM REMOVED OUTLETS AND RE-USE IN NEW WORK.

SHEET NOTES

1. REMOVE ALL ITEMS RELATED TO FIRE ALARM SYSTEM INCLUDING HALON SYSTEM. BLANK OFF ALL OUTLET BOXES AS REQUIRED.
2. 6" x 6" BOX ON FLOOR WITH (2) 2" CONDUIT TO CEILING TO BE REMOVED.
3. RECEPTACLE ON FLOOR TO BE REMOVED.
4. PLUGMOLD STRIPS AND WIRING TO BE REMOVED.
5. EMERGENCY PUSH BUTTON(HALON SYSTEM) TO BE REMOVED.
6. 4" x 4" WITH CONDUIT TO BE REMOVED.
7. RECEPTACLES INCLUDING SURFACE RACEWAY (WIREMOLD) TO BE REMOVED.
8. EXISTING RECEPTACLE OUTLET TO REMAIN OPERATIONAL.
9. RECEPTACLE AND SIGNAL OUTLETS TO BE REMOVED INCLUDING ALL CONDUIT.
10. ALL UNUSED SURFACE RACEWAY (WIREMOLD) TO BE REMOVED.
11. SIGNAL OUTLET TO BE REMOVED.
12. (E)FC UNIT; 208/230, 3/4HP MOTOR, 4.3 AMPS. MCA IS 5.4 AMPS. TO BE REMOVED. SAVE CIRCUITS FOR RE-USE IN NEW WORK.
13. SURFACE RACEWAY WITH DATA OUTLET(S) TO BE REMOVED.
14. REMOVE SURFACE RECEPTACLE OUTLET INCLUDING ALL ASSOCIATED WIRING TO NEAREST OUTLET/CONNECTION POINT. SITE VERIFY. OUTLET BOX TO BE INACTIVE AND PLASTERED UP TO ADAPT NEW WALL.
15. REMOVE EXTENSION BOX AND CONNECTION TO SURFACE TYPE RECEPTACLES. INSTALL NEW DUPLEX RECEPTACLE, CONNECT COMPLETE.
16. EXISTING POWER POLE WITH RECEPTACLE OUTLETS AND WIREMOLD RACEWAY TO RECEPTACLES MOUNTED ON TABLE TO BE REMOVED.
17. REMOVE EXISTING DOOR PUSH PLATE CONTROL AND RE-INSTALL AFTER NEW WALL. CONNECT COMPLETE.
18. REMOVE ALL ITEMS RELATED TO LIGHTING SYSTEM IN THIS ROOM, UNLESS OTHERWISE NOTED TO REMAIN. SAVE EXISTING CIRCUITS AND RE-USED IN NEW WORK.

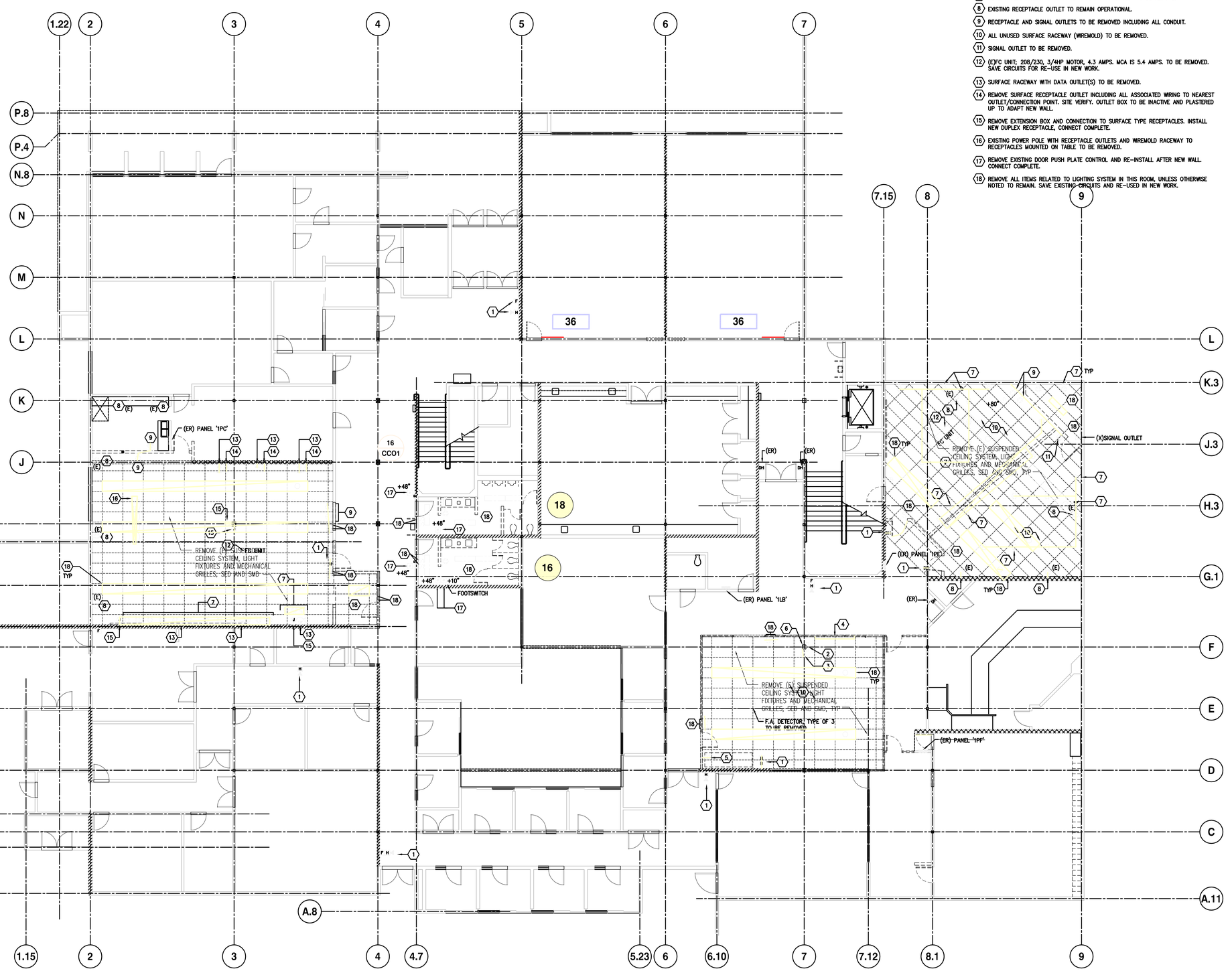

1 ELECTRICAL FIRST FLOOR DEMOLITION PLAN[1]

SCALE: 1/8" = 1'-0"

N

PROJECT RECORD DRAWINGS
6/16/2011
CONTRACTOR: GRAY ELECTRIC

REVISION	DESCRIPTION	INITIAL	DATE
	ISSUED FOR PROGRESS REVIEW		
	ISSUED FOR PLAN CHECK – DSA		07/01/09
	ISSUED FOR PERMIT		
	ISSUED FOR BID		
	ISSUED FOR CONSTRUCTION		

SEAL:

REGISTERED PROFESSIONAL ENGINEER — JOSE L. IBE — No. E 17369 Exp. 9-30-10 — ELECTRICAL — STATE OF CALIFORNIA

CONSULTANT:

WHM INCORPORATED
Engineering Consultants
1605 School Street
Moraga, CA 94556
Tel (925)376-2002 • Fax (925)376-2004
cad@whminc.com
09-010

INTERACTIVE RESOURCES
ARCHITECTURE • PLANNING • ENGINEERING
117 PARK PLACE
POINT RICHMOND
CALIFORNIA 94801
(510) 236-7435
(FAX) 232-5325
http//www.intres.com

PROJECT:

APPLIED ARTS REMODEL

CONTRA COSTA COLLEGE
2600 MISSION BELL DR.
SAN PABLO, CA.

CONTRA COSTA COMMUNITY COLLEGE DISTRICT

SHEET TITLE:

ELECTRICAL FIRST FLOOR DEMOLITION PLAN

PROJ. NO.	2008-090.01
	PREPARATION AND REVIEW
DRAWN BY	DW/LC
DESIGNER	JWE
PROJ. MGR.	
PEER REVIEW	

SHEET NUMBER:

E1.1

NUMBER: OF:

C:\USERS\MIKE MAHONEY\DESKTOP\CONTRA COSTA FINE ARTS REMODEL - CAD WORK 5-11\CAD FILES\092809 DSA PROGRESS\090101.1.DWG
06/17/11 12:22:04 PM

GENERAL DEMOLITION NOTES

1. NO ACCURATE AS-BUILT DRAWINGS AVAILABLE. CONTRACTOR TO VERIFY IN FIELD ALL EXISTING CONDITION AND MAKE NECESSARY ADJUSTMENT TO FOLLOW THIS DESIGN.
2. ALL EXISTING ITEMS NOT SHOWN ARE TO REMAIN OPERATIONAL.
3. REMOVE ALL ASSOCIATED CONDUIT AND WIRING TO THE NEAREST BOX OR CONNECTION POINT FROM ALL THE OUTLETS THAT ARE TO BE DEMOLISHED/REMOVED. LEAVE ALL
4. OTHER EXISTING OUTLET IN OPERATION WHENEVER AFFECTED WITH THIS WORK.
5. SAVE ALL EXISTING CIRCUITS FROM REMOVED OUTLETS AND RE-USE IN NEW WORK.

SHEET NOTES

1. REMOVE ALL ITEMS RELATED TO FIRE ALARM SYSTEM INCLUDING HALON SYSTEM ON THIS FLOOR. BLANK OFF ALL OUTLET BOXES AS REQUIRED.
2. REMOVE ALL ITEMS RELATED TO LIGHTING AND POWER SYSTEMS IN THIS ROOM, UNLESS OTHERWISE NOTED TO REMAIN. SAVE EXISTING CIRCUITS AND RE-USED IN NEW WORK.
3. EXISTING PANEL TO BE REMOVED AND RELOCATED TO NEW LOCATION AS SHOWN IN NEW WORK, SEE E3.2. INTERCEPT EXISTING 225A FEEDER WITH AN 16"X16"X6" PULL BOX. MINIMUM IN CEILING SPACE AND EXTEND TO NEW PANEL LOCATION. INTERCEPT ALL BRANCH CIRCUIT WIRING AND EXTEND TO NEW PANEL LOCATION MAINTAINING CIRCUIT DESIGNATION. CONNECT COMPLETE.
4. REMOVE EXISTING DOOR PUSH PLATE CONTROL AND RE-INSTALL AFTER NEW WALL. CONNECT COMPLETE.
5. EXISTING ANSUL PANEL TO REMAIN AND RE-CONNECTED TO NEW FIRE ALARM SYSTEM. SEE E4.2

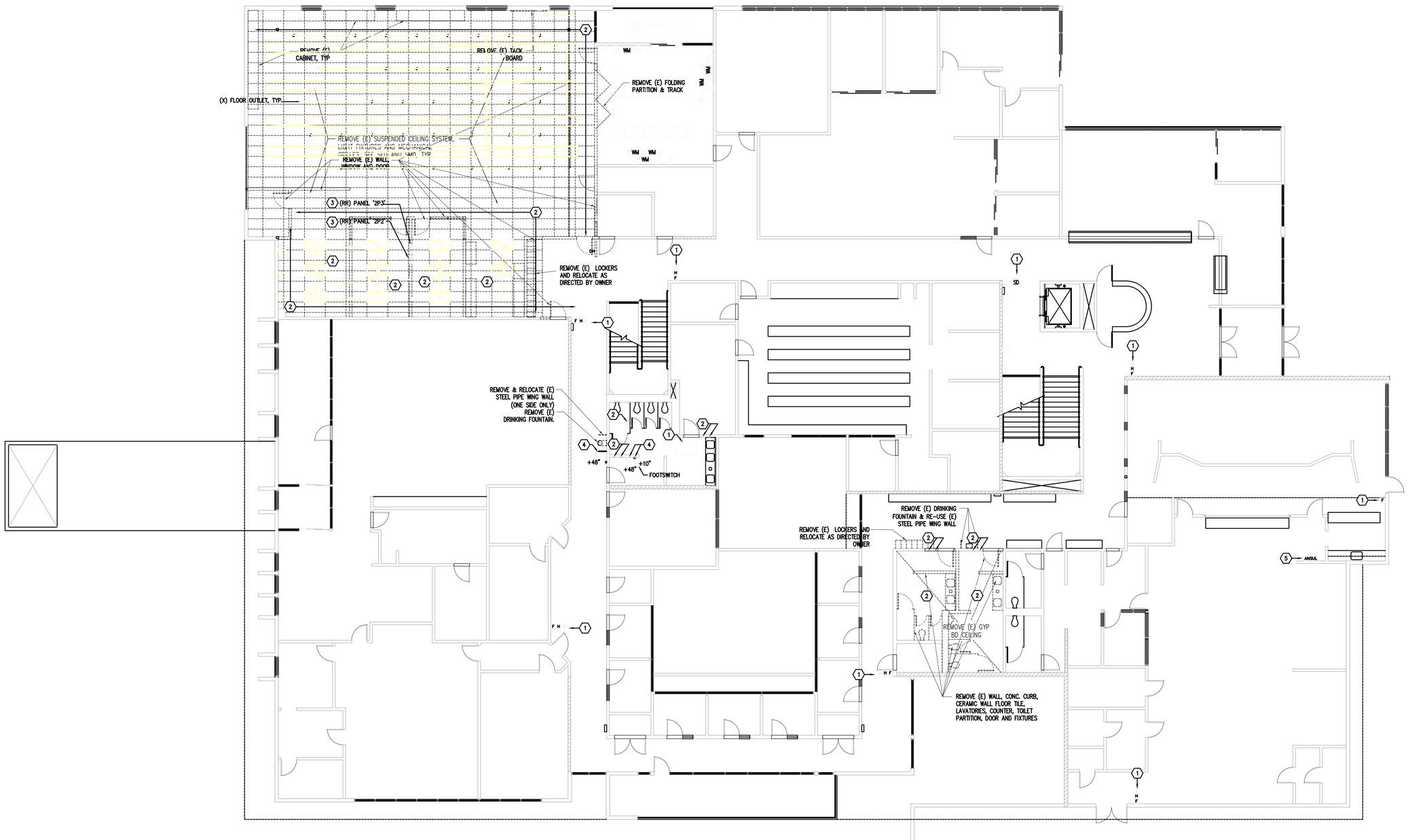

1 ELECTRICAL SECOND FLOOR DEMOLITION PLAN

SCALE: 1/8" = 1'-0"

PROJECT RECORD DRAWINGS
6/16/2011
CONTRACTOR: GRAY ELECTRIC

1

REVISION	DESCRIPTION	INITIAL	DATE
	ISSUED FOR PROGRESS REVIEW		
	ISSUED FOR PLAN CHECK - DSA		07/01/09
	ISSUED FOR PERMIT		
	ISSUED FOR BID		
	ISSUED FOR CONSTRUCTION		

SEAL:

REGISTERED PROFESSIONAL ENGINEER — JOSE L. ME — No. E 17369 Exp. 9-30-10 — ELECTRICAL — STATE OF CALIFORNIA

CONSULTANT:

WHM INCORPORATED
Engineering Consultants
1605 School Street
Moraga, CA 94556
Tel (925)376-2802 • Fax (925)376-2804
cad@whminc.com
09-010

INTERACTIVE RESOURCES
ARCHITECTURE • PLANNING • ENGINEERING
117 PARK PLACE
POINT RICHMOND
CALIFORNIA 94801
(510) 236-7435
(FAX) 232-5325
http//www.intres.com

PROJECT:

APPLIED ARTS REMODEL

CONTRA COSTA COLLEGE
2600 MISSION BELL DR.
SAN PABLO, CA.

CONTRA COSTA COMMUNITY COLLEGE DISTRICT

SHEET TITLE:

ELECTRICAL SECOND FLOOR DEMOLITION PLAN

PROJ. NO.	2008-090.01
	PREPARATION AND REVIEW
DRAWN BY	DM/LC
DESIGNER	JWE
PROJ. MGR.	
PEER REVIEW	

SHEET NUMBER:

E1.2

NUMBER: OF:

06/17/11 12:22:32 PM C:\USERS\MIKE MAHONEY\DESKTOP\CONTRA COSTA FINE ARTS REMODEL - CAD WORK 5-11\CAD FILES\092809 DSA PROGRESS\090101E12.DWG
FILE: C:\2008\08-090.00\ AA\08090E1.2.dwg PAGE SETUP By: 07/06/09 4:38:51 PM

SHEET NOTES

1. CONNECT COMPLETE TO NEAREST EXISTING LIGHTING CIRCUIT.
2. LOW VOLTAGE WIRING PER MANUFACTURER'S REQUIREMENTS.

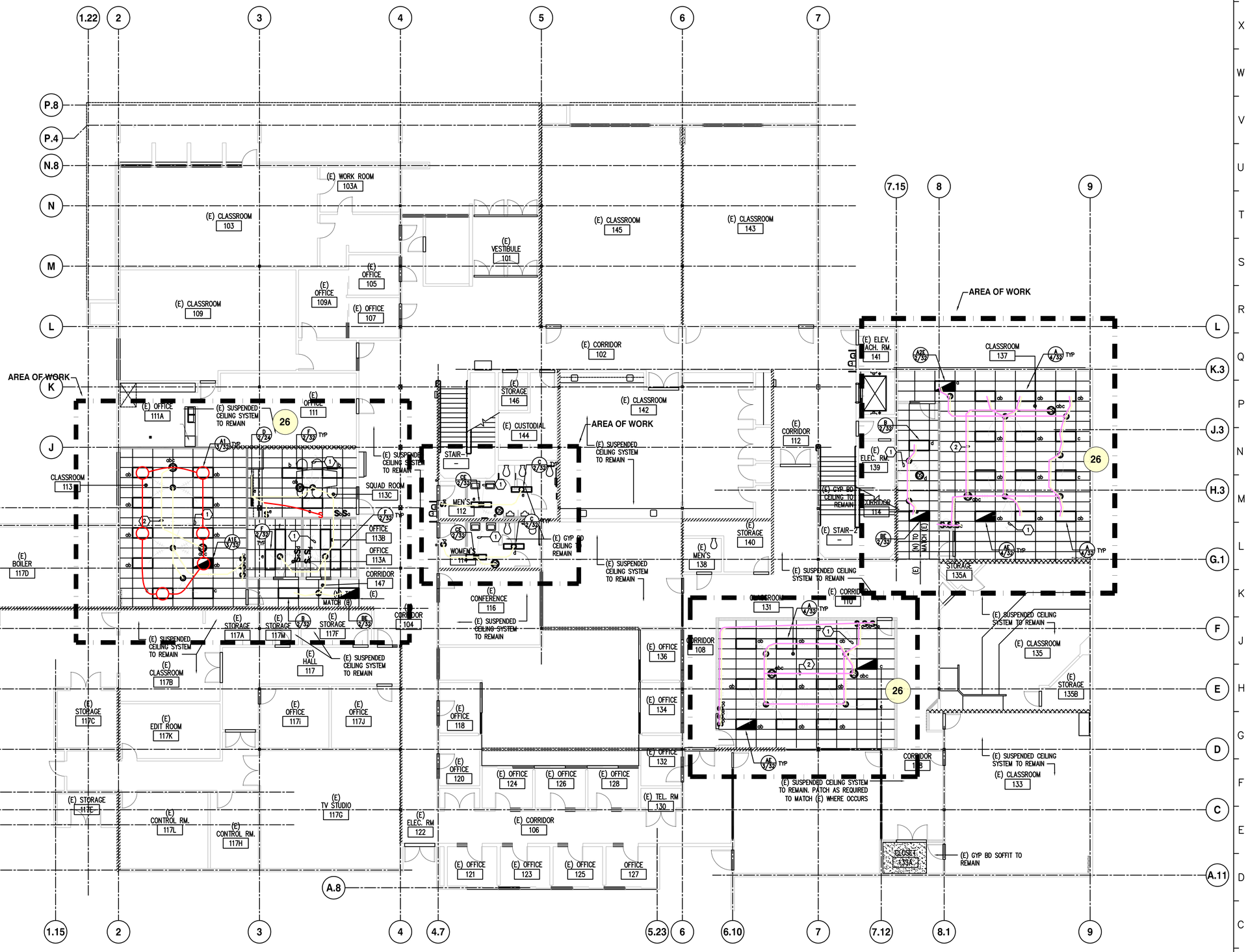

1 ELECTRICAL FIRST FLOOR LIGHTING PLAN

SCALE: 1/8" = 1'-0"

PROJECT RECORD DRAWINGS
6/16/2011
CONTRACTOR: GRAY ELECTRIC

REVISION	DESCRIPTION	INITIAL	DATE

ISSUED FOR PROGRESS REVIEW	
ISSUED FOR PLAN CHECK – DSA	07/01/09
ISSUED FOR PERMIT	
ISSUED FOR BID	
ISSUED FOR CONSTRUCTION	

SEAL:

REGISTERED PROFESSIONAL ENGINEER — JOSE L. IBE — No. E 17369 Exp. 9-30-10 — ELECTRICAL — STATE OF CALIFORNIA

CONSULTANT:

WHM INCORPORATED
Engineering Consultants
1605 School Street
Moraga, CA 94556
Tel (925)376-2802 • Fax (925)376-2804
cad@whminc.com
09-010

INTERACTIVE RESOURCES
ARCHITECTURE • PLANNING • ENGINEERING
117 PARK PLACE
POINT RICHMOND
CALIFORNIA 94801
(510) 236-7435
(FAX) 232-5325
http//www.intres.com

PROJECT:

APPLIED ARTS REMODEL

CONTRA COSTA COLLEGE
2600 MISSION BELL DR.
SAN PABLO, CA.

CONTRA COSTA COMMUNITY COLLEGE DISTRICT

SHEET TITLE:

ELECTRICAL FIRST FLOOR LIGHTING PLAN

PROJ. NO.	2008-090.01
	PREPARATION AND REVIEW
DRAWN BY	DM/LC
DESIGNER	JWE
PROJ. MGR.	
PEER REVIEW	

SHEET NUMBER:

E2.1

NUMBER: OF:

06/17/11 12:23:57 PM C:\USERS\MIKE MAHONEY\DESKTOP\CONTRA COSTA FINE ARTS REMODEL - CAD WORK 5-11\CAD FILES\092809 DSA PROGRESS\09010E2.1.DWG
FILE: P:\2009\09-010_CCC Arts\09010E2.1.dwg DWG 07/06/09 at 09:16

SHEET NOTES

1. CONNECT COMPLETE TO NEAREST EXISTING LIGHTING CIRCUIT.
2. LOW VOLTAGE WIRING PER MANUFACTURER'S REQUIREMENTS.

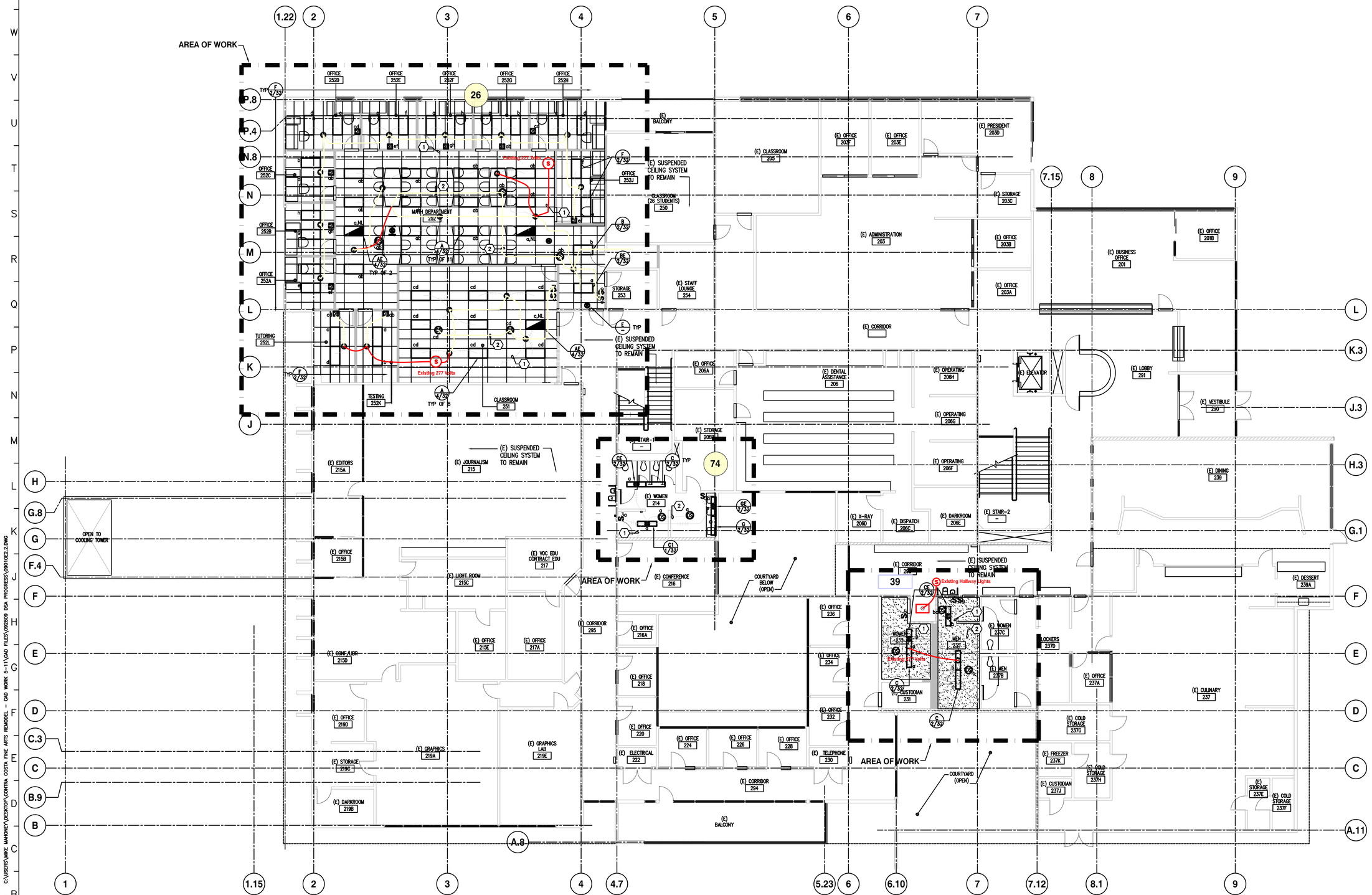

1 ELECTRICAL SECOND FLOOR LIGHTING PLAN

SCALE: 1/8" = 1'-0"

PROJECT RECORD DRAWINGS
6/16/2011
CONTRACTOR: GRAY ELECTRIC

REVISION	DESCRIPTION	INITIAL	DATE

ISSUED FOR PROGRESS REVIEW	
ISSUED FOR PLAN CHECK – DSA	07/01/09
ISSUED FOR PERMIT	
ISSUED FOR BID	
ISSUED FOR CONSTRUCTION	

SEAL:

REGISTERED PROFESSIONAL ENGINEER
JOSE L. WE
No. E 17369
Exp. 9-30-10
ELECTRICAL
STATE OF CALIFORNIA

CONSULTANT:

WHM INCORPORATED
Engineering Consultants
1605 School Street
Moraga, CA 94556
Tel (925)376-2902 * Fax (925)376-2904
cad@whminc.com
09-010

INTERACTIVE RESOURCES
ARCHITECTURE • PLANNING • ENGINEERING
117 PARK PLACE
POINT RICHMOND
CALIFORNIA 94801
(510) 236-7435
(FAX) 232-5325
http//www.intres.com

PROJECT:

APPLIED ARTS REMODEL

CONTRA COSTA COLLEGE
2600 MISSION BELL DR.
SAN PABLO, CA.

CONTRA COSTA COMMUNITY COLLEGE DISTRICT

SHEET TITLE:

ELECTRICAL SECOND FLOOR LIGHTING PLAN

PROJ. NO.	2008-090.01
PREPARATION AND REVIEW	
DRAWN BY	DM/LC
DESIGNER	JWE
PROJ. MGR.	
PEER REVIEW	

SHEET NUMBER:

E2.2

NUMBER: OF:

FILE: F:\2009\09-010_CCC Arts\09010E2.2.dwg DWG 07/06/09 at 09:16

06/17/11 12:24:36 PM C:\USERS\MIKE MAHONEY\DESKTOP\CONTRA COSTA FINE ARTS REMODEL - CAD WORK 5-11\CAD FILES\092809 DSA PROGRESS\09010E2.2.DWG

SHEET NOTES

1. FLOOR MOUNTED RACEWAY FOR AV/PROJECTOR CABLES; "AVTRAK" MANUFACTURED BY EXTRON ELECTRONIC.
2. VERIFY WITH AV DRAWINGS FOR EXACT LOCATION OF PROJECTOR IN CEILING PRIOR TO INSTALLATION.
3. PROVIDE 3/4" CONDUIT WITH PULLCORD TO ACCESSIBLE CEILING SPACE. SEE AV DRAWINGS FOR EXACT LOCATION.
4. FOR FUTURE SCANNER, PROVIDE 4"X4" RECESSED J-BOX WITH COVER WITH 3/4" CONDUIT AND PULLCORD TO ACCESSIBLE CEILING SPACE. SEE AV DRAWINGS FOR EXACT LOCATION.
5. SEE DETAIL 9/E0.2 FOR MORE INFORMATION AND LOCATION OF DEVICES.
6. WIREMOLD 400 SERIES WITH SEPARATE COMPARTMENT FOR POWER AND SIGNAL.

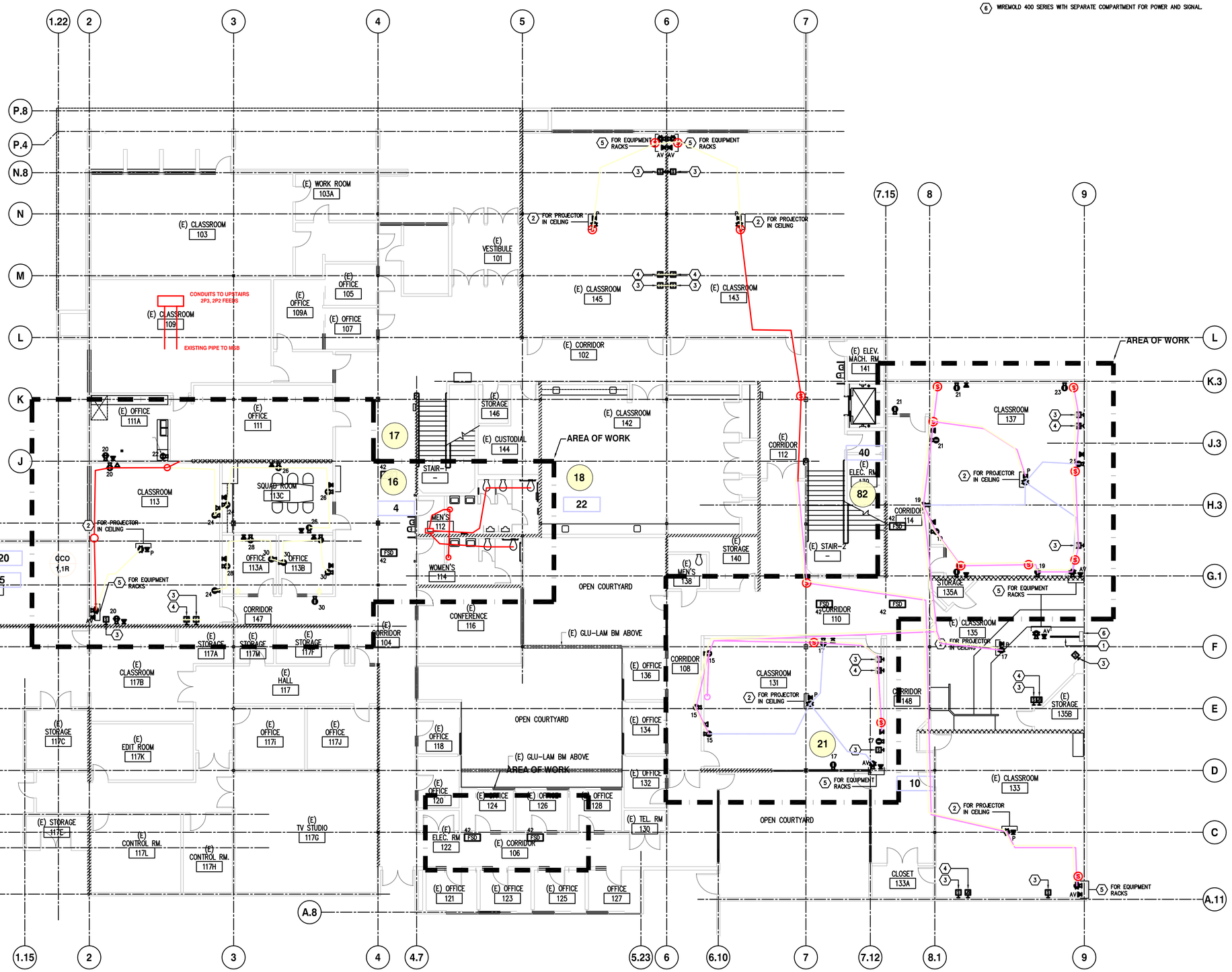

PROJECT RECORD DRAWINGS
6/16/2011
CONTRACTOR: GRAY ELECTRIC

1 ELECTRICAL FIRST FLOOR POWER AND SIGNAL PLAN
SCALE: 1/8" = 1'-0"

REVISION	DESCRIPTION	INITIAL	DATE

ISSUED FOR PROGRESS REVIEW	
ISSUED FOR PLAN CHECK – DSA	07/01/09
ISSUED FOR PERMIT	
ISSUED FOR BID	
ISSUED FOR CONSTRUCTION	

SEAL:

REGISTERED PROFESSIONAL ENGINEER — JOSE L. NIE — No. E 17369 Exp. 9-30-10 — ELECTRICAL — STATE OF CALIFORNIA

CONSULTANT:

WHM INCORPORATED
Engineering Consultants
1605 School Street
Moraga, CA 94556
Tel (925)376-2802 • Fax (925)376-2804
cad@whminc.com
09-010

INTERACTIVE RESOURCES
ARCHITECTURE • PLANNING • ENGINEERING
117 PARK PLACE
POINT RICHMOND
CALIFORNIA 94801
(510) 236-7435
(FAX) 232-5325
http//www.intres.com

PROJECT:

APPLIED ARTS REMODEL

CONTRA COSTA COLLEGE
2600 MISSION BELL DR.
SAN PABLO, CA.

CONTRA COSTA COMMUNITY COLLEGE DISTRICT

SHEET TITLE:

ELECTRICAL FIRST FLOOR POWER AND SIGNAL PLAN

PROJ. NO.	2008-090.01
	PREPARATION AND REVIEW
DRAWN BY	DM/LC
DESIGNER	JWE
PROJ. MGR.	
PEER REVIEW	

SHEET NUMBER:

E3.1

NUMBER: OF:

FILE: F:\2009\09-010_CCC Art\09010E3.1.dwg DWG 09/25/09 at 16:09

06/17/11 12:25:07 PM C:\USERS\MIKE MAHONEY\DESKTOP\CONTRA COSTA FINE ARTS REMODEL - CAD WORK 5-11\CAD FILES\092809 DSA PROGRESS\09010E3.1.DWG

SHEET NOTES

1. RELOCATED PANEL. SEE ALSO 1/E1.1.
2. VERIFY WITH AV DRAWINGS FOR EXACT LOCATION OF PROJECTOR IN CEILING PRIOR TO INSTALLATION.
3. PROVIDE 3/4" CONDUIT WITH PULLCORD TO ACCESSIBLE CEILING SPACE. SEE AV DRAWINGS FOR EXACT LOCATION.
4. FOR FUTURE SCANNER, PROVIDE 4"X4" RECESSED J-BOX WITH COVER WITH 3/4" CONDUIT AND PULLCORD TO ACCESSIBLE CEILING SPACE. SEE AV DRAWINGS FOR EXACT LOCATION.
5. SEE DETAIL 9/E0.2 FOR MORE INFORMATION AND LOCATION OF DEVICES.
6. COPIER. VERIFY LOCATION PRIOR TO INSTALLATION.

AREA OF WORK

OPEN TO COOLING TOWER

PROJECT RECORD DRAWINGS
6/16/2011
CONTRACTOR: GRAY ELECTRIC

1 ELECTRICAL SECOND FLOOR POWER AND SIGNAL PLAN
SCALE: 1/8" = 1'-0"

REVISION	DESCRIPTION	INITIAL	DATE

ISSUED FOR PROGRESS REVIEW	
ISSUED FOR PLAN CHECK	
ISSUED FOR PERMIT	
ISSUED FOR BID	
ISSUED FOR CONSTRUCTION	

SEAL:

REGISTERED PROFESSIONAL ENGINEER — JOSE L. ME — No. E 17369 Exp. 9-30-10 — ELECTRICAL — STATE OF CALIFORNIA

CONSULTANT:

WHM INCORPORATED
Engineering Consultants
1605 School Street
Moraga, CA 94556
Tel (925)376-2902 • Fax (925)376-2904
cad@whminc.com
09-010

INTERACTIVE RESOURCES
ARCHITECTURE • PLANNING • ENGINEERING
117 PARK PLACE
POINT RICHMOND
CALIFORNIA 94801
(510) 236-7435
(FAX) 232-5325
http//www.intres.com

PROJECT:

APPLIED ARTS REMODEL

CONTRA COSTA COLLEGE
2600 MISSION BELL DR.
SAN PABLO, CA.

CONTRA COSTA COMMUNITY COLLEGE DISTRICT

SHEET TITLE:

ELECTRICAL SECOND FLOOR POWER AND SIGNAL PLAN

PROJ. NO.	2008-058.01
	PREPARATION AND REVIEW
DRAWN BY	DM/LC
DESIGNER	JWE
PROJ. MGR.	
PEER REVIEW	

SHEET NUMBER:

E3.2

NUMBER: OF:

C:\USERS\MIKE MAHONEY\DESKTOP\CONTRA COSTA FINE ARTS REMODEL - CAD WORK 5-11\CAD FILES\092809 DSA PROGRESS\09010E3.2.DWG
06/17/11 12:27:46 PM

SHEET NOTES

1. PROVIDE 2" CONDUIT SLEEVE FOR FIRE ALARM CABLING. SEAL AS REQUIRED.
2. COORDINATE WITH DIV 15 TO INSTALL NEW DUCT SMOKE DETECTOR IN EXISTING DUCT AND CONNECT COMPLETE TO (N)FIRE ALARM SYSTEM AS SHOWN. PROVIDE INTERLOCK/COMTROL WIRING TO SHUT DOWN EQUIPMENT UPON ACTIVATION OF DETECTOR.
3. COORDINATE WITH DIV 15 TO INSTALL NEW FIRE SMOKE DAMPER IN EXISTING DUCT AND CONNECT COMPLETE TO (N)FIRE ALARM SYSTEM AS SHOWN. PROVIDE INTERLOCK/ CONTROL WIRING TO SHUT DOWN RESPECTIVE EQUIPMENT UPON ACTIVATION OF DETECTOR.

1 ELECTRICAL FIRST FLOOR FIRE ALARM PLAN
SCALE: 1/8" = 1'-0"

PROJECT RECORD DRAWINGS
6/16/2011
CONTRACTOR: GRAY ELECTRIC

REVISION	DESCRIPTION	INITIAL	DATE
	ISSUED FOR PROGRESS REVIEW		
	ISSUED FOR PLAN CHECK		
	ISSUED FOR PERMIT		
	ISSUED FOR BID		
	ISSUED FOR CONSTRUCTION		

SEAL:

REGISTERED PROFESSIONAL ENGINEER — JOSE L. IBE — No. E 17369 Exp. 9-30-10 — ELECTRICAL — STATE OF CALIFORNIA

CONSULTANT:

WHM INCORPORATED
Engineering Consultants
1805 School Street
Moraga, CA 94556
Tel (925)376-2902 • Fax (925)376-2904
cad@whminc.com
09-010

INTERACTIVE RESOURCES
ARCHITECTURE • PLANNING • ENGINEERING
117 PARK PLACE
POINT RICHMOND
CALIFORNIA 94801
(510) 236-7435
(FAX) 232-5325
http//www.intres.com

PROJECT:

APPLIED ARTS REMODEL

CONTRA COSTA COLLEGE
2600 MISSION BELL DR.
SAN PABLO, CA.

CONTRA COSTA COMMUNITY COLLEGE DISTRICT

SHEET TITLE:

ELECTRICAL FIRST FLOOR FIER ALARM PLAN

PROJ. NO.	2008-058.01
	PREPARATION AND REVIEW
DRAWN BY	DW/LC
DESIGNER	JWE
PROJ. MGR.	
PEER REVIEW	

SHEET NUMBER:

E4.1

NUMBER: OF:

C:\Users\Mike Mahoney\Desktop\Contra Costa Fine Arts Remodel - CAD Work 5-11\CAD FILES\092809 DSA PROGRESS\09010E4.1.DWG 06/17/11 12:28:22 PM

FILE: F:\2009\09-010_CCC Arts\09010E4.1.dwg,DWG 07/06/09 at 09:20

SHEET NOTES

1. SITE VERIFY EXISTING ANSUL SYSEM REQUIREMENTS AND PROVIDE NEW MONITOR MODULE. CONNECT COMPLETE TO (N)FIRE ALARM SYSTEM AS SHOWN.
2. COORDINATE WITH DIV 15 TO INSTALL NEW DUCT SMOKE DETECTOR IN EXISTING DUCT AND CONNECT COMPLETE TO (N)FIRE ALARM SYSTEM AS SHOWN. PROVIDE INTERLOCK/ COMTROL WIRING TO SHUT DOWN RESPECTIVE EQUIPMENT UPON ACTIVATION OF DETECTOR.
3. COORDINATE WITH DIV 15 TO INSTALL NEW FIRE SMOKE DAMPER IN EXISTING DUCT AND CONNECT COMPLETE TO (N)FIRE ALARM SYSTEM AS SHOWN. PROVIDE INTERLOCK/ COMTROL WIRING TO SHUT DOWN RESPECTIVE EQUIPMENT UPON ACTIVATION OF DETECTOR.

1 ELECTRICAL SECOND FLOOR FIRE ALARM PLAN

SCALE: 1/8" = 1'-0"

PROJECT RECORD DRAWINGS
6/16/2011
CONTRACTOR: GRAY ELECTRIC

REVISION	DESCRIPTION	INITIAL	DATE
	ISSUED FOR PROGRESS REVIEW		
	ISSUED FOR PLAN CHECK		
	ISSUED FOR PERMIT		
	ISSUED FOR BID		
	ISSUED FOR CONSTRUCTION		

SEAL:

REGISTERED PROFESSIONAL ENGINEER — JOSE L. ME — No. E 17369 Exp. 9-30-10 — ELECTRICAL — STATE OF CALIFORNIA

CONSULTANT:

WHM INCORPORATED
Engineering Consultants
1605 School Street
Moraga, CA 94556
Tel (925)376-2902 • Fax (925)376-2904
cad@whminc.com
09-010

INTERACTIVE RESOURCES
ARCHITECTURE • PLANNING • ENGINEERING
117 PARK PLACE
POINT RICHMOND
CALIFORNIA 94801
(510) 236-7435
(FAX) 232-5325
http//www.intres.com

PROJECT:

APPLIED ARTS REMODEL

CONTRA COSTA COLLEGE
2600 MISSION BELL DR.
SAN PABLO, CA.

CONTRA COSTA COMMUNITY COLLEGE DISTRICT

SHEET TITLE:

ELECTRICAL SECOND FLOOR FIRE ALARM PLAN

PROJ. NO.	2008-058.01
	PREPARATION AND REVIEW
DRAWN BY	DM/LC
DESIGNER	JWE
PROJ. MGR.	
PEER REVIEW	

SHEET NUMBER:

E4.2

NUMBER: OF:

C:\Users\Mike Mahoney\Desktop\Contra Costa Fine Arts Remodel - CAD Work 5-11\CAD files\092809 DSA PROGRESS\090105E4.2.dwg 06/17/11 12:28:51 PM

G:\Users\Mike Mahoney\Desktop\Contra Costa Fine Arts Remodel - CAD Work 5-11\CAD files\092809 DSA PROGRESS\090105E4.2.dwg 6/17/2011 12:28 PM Mike Mahoney

FILE: T:\2008\08-010_CCC Art\090105E4.2.dwg DWG 07/08/09 at 09:20

CAMPUS FIRE ALARM OPERATION MATRIX

	ANNUNCIATE ALARM CONDITION AT FACP	ANNUNCIATE TROUBLE CONDITION AT FACP	ANNUNCIATE ALARM CONDITION AT ANNUNCIATOR	ANNUNCIATE TROUBLE CONDITION AT ANNUNCIATOR	ACTIVATE HORN/STROBES UNITS THROUGHOUT THE CAMPUS	ACTIVATE SPRINKLER RISER BELL	SHUTDOWN ASSOCIATED AHU AND FIRE SMOKE DAMPERS	ACTIVATE ALARM SIGNAL FOR CENTRAL STATION (SIGNAL VIA DRY CONTACTS)	ACTIVATE TROUBLE SIGNAL FOR CENTRAL STATION (SIGNAL VIA DRY CONTACTS)	ANNUNCIATE SUPERVISORY AT PANEL AND ANNUNCIATOR AND CENTRAL STATION	RECALL ELEVATOR TO FIRST FLOOR	RECALL ELEVATOR TO SECOND FLOOR
MANUAL STATION	X		X		X			X				
HEAT/SMOKE DETECTORS	X		X		X		X	X				
SYSTEM TROUBLE		X		X					X			

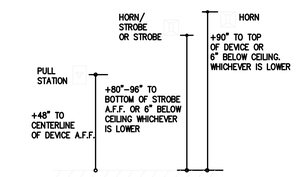

1 TYPICAL ELEVATIONS PULLS/HORN/STROBE

NO SCALE

BILL OF MATERIALS

QTY.	DESCRIPTION	MODEL #	MANUFACTURER	CSFM LISTING #
1	FIRE ALARM CONTROL PANEL	MXL-IQ	SIEMENS	7165-0067:144
1	FIRE ALARM ANNUNCIATOR	RCC-2	SIEMENS	7300-0067:152
4	REMOTE POWER SUPPLY - PS 12/24 M8	PS-12/24 M8	WHEELOCK	7315-0785:162
9	ADDRESSABLE DOUBLE ACTION PULL STATION	MSI-20B	SIEMENS	7150-0067:036
139	ADDRESSABLE PHOTOELECTRIC SMOKE DETECTOR	FP-11/DB11	SIEMENS	7272-0067:203
3	PHOTOELECTRIC SMOKE DETECTOR WITH RELAY BASE	FP-11/DB11	SIEMENS	7272-0067:203
6	ADDRESSABLE HEAT DETECTOR	FST-851H	SIEMENS	7272-0067:202
148	DETECTOR MOUNTING BASE	DB-11	SIEMENS	7300-0067:134
1	ADDRESSABLE MONITOR MODULE	TRI-D	SIEMENS	7300-0067:146
2	ADDRESSABLE CONTROL RELAYS	CRM-4	SIEMENS	7165-0067:144
9	DUCT SMOKE DETECTOR	FP-11/AD-11XPR	SIEMENS	7272-0067:203
1	(E)DOOR HOLD OPEN	FM996	NOTIFIER	3550-0028:210
17	EXTERIOR WEATHERPROOF HORN	AH-24WP	WHEELOCK	7125-0785:131
21	WALL MOUNT HORN/STROBE (15CD)	AS-24MCW-FR	WHEELOCK	7125-0785:131
6	WALL MOUNT HORN/STROBE (30CD)	AS-24MCW-FR	WHEELOCK	7125-0785:131
40	WALL MOUNT HORN/STROBE (75CD)	AS-24MCW-FR	WHEELOCK	7125-0785:131
12	WALL MOUNT HORN/STROBE (110CD)	AS-24MCW-FR	WHEELOCK	7125-0785:131

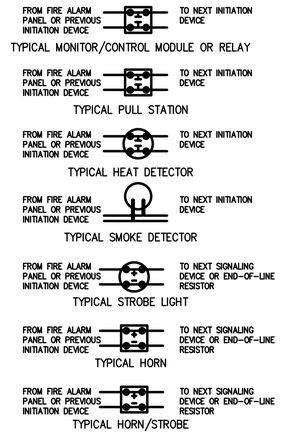

2 TYPICAL FIRE ALARM DETAILS

NOT TO SCALE

RPS 1A
PANEL MODULES

QTY	DESCRIPTION	STANDBY EACH	STANDBY TOTAL	ALARM EACH	ALARM TOTAL
1	PS-12/24 M8	0.0600	0.0600	0.2000	0.2000
	PANEL STANDBY CURRENT		0.0600		
	PANEL ALARM CURRENT				0.2000

FIELD DEVICES

QTY	DESCRIPTION	STANDBY EACH	STANDBY TOTAL	ALARM EACH	ALARM TOTAL
1	EXTERIOR WEATHERPROOF HORN	0.0000	0.0000	0.0620	0.0620
13	WALL MOUNT HORN/STROBE (15CD)	0.0000	0.0000	0.0800	1.0400
	WALL MOUNT HORN/STROBE (30CD)	0.0000	0.0000	0.1020	0.0000
12	WALL MOUNT HORN/STROBE (75CD)	0.0000	0.0000	0.1500	1.8000
1	WALL MOUNT HORN/STROBE (110CD)	0.0000	0.0000	0.1940	0.1940
	DEVICE STANDBY CURRENT		0.0000		
	DEVICE ALARM CURRENT				4.1140

TOTAL SYSTEM CURRENT

DESCRIPTION	STANDBY	ALARM
CONTROL PANEL	0.0600	0.2000
FIELD DEVICES	0.0000	4.1140
TOTAL STANDBY CURRENT	0.0600	
X24 HOUR STANDBY	1.4400	
TOTAL ALARM CURRENT		4.3140
5 MINUTES OF ALARM (X.083)		0.3581
TOTAL BATTERY REQUIREMENT		1.7981
BATTERY SUPPLIED		(2) 7AH

RPS 2A
PANEL MODULES

QTY	DESCRIPTION	STANDBY EACH	STANDBY TOTAL	ALARM EACH	ALARM TOTAL
1	PS-12/24 M8	0.0600	0.0600	0.2000	0.2000
	PANEL STANDBY CURRENT		0.0600		
	PANEL ALARM CURRENT				0.2000

FIELD DEVICES

QTY	DESCRIPTION	STANDBY EACH	STANDBY TOTAL	ALARM EACH	ALARM TOTAL
	EXTERIOR WEATHERPROOF HORN	0.0000	0.0000	0.0620	0.0000
17	WALL MOUNT HORN/STROBE (15CD)	0.0000	0.0000	0.0800	1.3600
	WALL MOUNT HORN/STROBE (30CD)	0.0000	0.0000	0.1020	0.0000
5	WALL MOUNT HORN/STROBE (75CD)	0.0000	0.0000	0.1500	0.7500
3	WALL MOUNT HORN/STROBE (110CD)	0.0000	0.0000	0.1940	0.5820
	DEVICE STANDBY CURRENT		0.0000		
	DEVICE ALARM CURRENT				3.7720

TOTAL SYSTEM CURRENT

DESCRIPTION	STANDBY	ALARM
CONTROL PANEL	0.0600	0.2000
FIELD DEVICES	0.0000	3.7720
TOTAL STANDBY CURRENT	0.0600	
X24 HOUR STANDBY	1.4400	
TOTAL ALARM CURRENT		3.9720
5 MINUTES OF ALARM (X.083)		0.3297
TOTAL BATTERY REQUIREMENT		1.7697
BATTERY SUPPLIED		(2) 7AH

RPS 1B
PANEL MODULES

QTY	DESCRIPTION	STANDBY EACH	STANDBY TOTAL	ALARM EACH	ALARM TOTAL
1	PS-12/24 M8	0.0600	0.0600	0.2000	0.2000
	PANEL STANDBY CURRENT		0.0600		
	PANEL ALARM CURRENT				0.2000

FIELD DEVICES

QTY	DESCRIPTION	STANDBY EACH	STANDBY TOTAL	ALARM EACH	ALARM TOTAL
2	EXTERIOR WEATHERPROOF HORN	0.0000	0.0000	0.0620	0.1240
14	WALL MOUNT HORN/STROBE (15CD)	0.0000	0.0000	0.0800	1.1200
1	WALL MOUNT HORN/STROBE (30CD)	0.0000	0.0000	0.1020	0.1020
3	WALL MOUNT HORN/STROBE (75CD)	0.0000	0.0000	0.1500	0.4500
5	WALL MOUNT HORN/STROBE (110CD)	0.0000	0.0000	0.1940	0.9700
	DEVICE STANDBY CURRENT		0.0000		
	DEVICE ALARM CURRENT				2.6420

TOTAL SYSTEM CURRENT

DESCRIPTION	STANDBY	ALARM
CONTROL PANEL	0.0600	0.2000
FIELD DEVICES	0.0000	2.6420
TOTAL STANDBY CURRENT	0.0600	
X24 HOUR STANDBY	1.4400	
TOTAL ALARM CURRENT		2.8420
5 MINUTES OF ALARM (X.083)		0.2359
TOTAL BATTERY REQUIREMENT		1.6759
BATTERY SUPPLIED		(2) 7AH

RPS 2B
PANEL MODULES

QTY	DESCRIPTION	STANDBY EACH	STANDBY TOTAL	ALARM EACH	ALARM TOTAL
1	PS-12/24 M8	0.0600	0.0600	0.2000	0.2000
	PANEL STANDBY CURRENT		0.0600		
	PANEL ALARM CURRENT				0.2000

FIELD DEVICES

QTY	DESCRIPTION	STANDBY EACH	STANDBY TOTAL	ALARM EACH	ALARM TOTAL
	EXTERIOR WEATHERPROOF HORN	0.0000	0.0000	0.0620	0.0000
13	WALL MOUNT HORN/STROBE (15CD)	0.0000	0.0000	0.0800	1.0400
4	WALL MOUNT HORN/STROBE (30CD)	0.0000	0.0000	0.1020	0.4080
11	WALL MOUNT HORN/STROBE (75CD)	0.0000	0.0000	0.1500	1.6500
3	WALL MOUNT HORN/STROBE (110CD)	0.0000	0.0000	0.1940	0.5820
	DEVICE STANDBY CURRENT		0.0000		
	DEVICE ALARM CURRENT				3.6800

TOTAL SYSTEM CURRENT

DESCRIPTION	STANDBY	ALARM
CONTROL PANEL	0.0600	0.2000
FIELD DEVICES	0.0000	3.6800
TOTAL STANDBY CURRENT	0.0600	
X24 HOUR STANDBY	1.4400	
TOTAL ALARM CURRENT		3.8800
5 MINUTES OF ALARM (X.083)		0.3220
TOTAL BATTERY REQUIREMENT		1.7620
BATTERY SUPPLIED		(2) 7AH

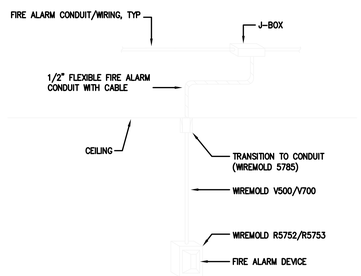

3 TYPICAL SURFACE RACEWAY

NOT TO SCALE

PROJECT RECORD DRAWINGS
6/16/2011
CONTRACTOR: GRAY ELECTRIC

SCOPE OF WORK

1. PROVIDE NEW DEVICE/COMPONENTS COMPLETE WITH WIRING AND CONNECT TO (E)SIEMENS MXL-IQ FIRE ALARM PANEL.
2. REMOVE ALL EXISTING FIRE ALARM SYSTEM/DEVICES/COMPONENTS AND REPLACE WITH NEW. REMOVE ALL EXISTING RACEWAYS, DEVICES AND WIRING. BLANK OFF OUTLET BOXES AS REQUIRED.

TYPE OF SYSTEM

-THIS IS A STAND ALONE MANUAL ADDRESSABLE SYSTEM WITH SUPPLEMENTAL AUTOMATIC DETECTION.
-CLASS 'B' DETECTION
-CLASS 'B' INITIATION
-SYSTEM IS A PROTECTED PREMISES AND REQUIRES 24 HOUR STANDBY.
-THIS IS A COLLEGE CAMPUS. SB 575(GREEN OAKS FAMILY FIRE PROTECTION ACT) IS NOT APPLICABLE.

APPLICABLE CODES

1. CBC 2007; CEC 2007; CMC 2007; CFC 2007
2. TITLE 19 PUBLIC SAFETY – CALIFORNIA STATE FIRE MARSHAL REQUIREMENTS
3. NFPA 72 (NATIONAL FIRE ALARM CODE) 2007 EDITION WITH CALIFORNIA AMENDMENTS

FIRE ALARM SYSTEM NOTES

1. FINAL FIRE ALARM TEST SHALL BE MADE WITH THE DSA PROJECT INSPECTOR (PI). LOCAL FIRE AUTHORITY SHALL BE NOTIFIED OF DATE AND TIME OF FINAL FIRE ALARM TESTING AND SHALL ASSIST/ WITNESS SUCH TESTING WHEN ABLE.
2. UNDERGROUND AND EXTERIOR CONDUITS WILL HAVE WATER-TIGHT FITTINGS. (CEC 110-11 AND 300-6)
3. FIRE ALARM DEVICE MOUNTING HEIGHTS:
   - PULL STATION: 48" TO CENTER LINE OF DEVICE ABOVE FINISHED FLOOR. (CEC 380-8c)
   - HORN INTERIOR: MINIMUM 80" TO TOP OF DEVICE ABOVE FINISHED FLOOR, NOT LESS THAN 6" FROM CEILING. (2007 NFPA72-4-3.5.1)
   - WALL MOUNTED STROBE OR HORN/STROBE: MINIMUM 80" TO BOTTOM OF DEVICE AND NOT GREATER THAN 96" ABOVE FINISHED FLOOR, NOT LESS THAN 6" FROM CEILING. (2007 NFPA72-4-4.4)
4. AUDIBLE DEVICE(S) SHALL BE AT LEAST 15dBA ABOVE AVERAGE AMBIENT SOUND LEVEL BUT NOT LESS THAN 75dba AT 10' OR MORE THAN 110dBA AT THE MINIMUM HEARING DISTANCE FROM THE AUDIBLE APPLIANCE (2007 NFPA72-4-3.2.1 AND CFC 1007.3.3.3.3)
5. AUDIBLE DEVICES SHALL SOUND THE CALIFORNIA UNIFORM FIRE ALARM SIGNAL IN TEMPORAL MODE.
6. PROVIDE AT LEAST ONE EXTERIOR HORN ON BUILDINGS FOR E OCCUPANCIES. (CFC 1007.2.4.3)
7. VISUAL DEVICES SHALL NOT EXCEED 2 FLASHES PER SECOND AND SHALL NOT BE SLOWER THAN 1 FLASH EVERY SECOND. (2007 NFPA72-4-4.2)
8. FIRE ALARM CONTRACTOR SHALL PROVIDE A "RECORD OF COMPLETION" TO THE PROJECT INSPECTOR (PI) / DSA AFTER COMPLETION OF OPERATIONAL ACCEPTANCE TESTS. (2007 NFPA 72 SEC. 1-6.2.1 AND FIGURE 1-6.2.1)
9. ALL CIRCUITS SHALL BE SUPERVISED AGAINST OPENS, SHORTS AND GROUNDS.
10. INSTALLATION OF DEVICES SHALL BE IN ACCORDANCE WITH MANUFACTURER'S INSTRUCTIONS.
11. MARK ALL WIRES IN ACCORDANCE WITH 760-10.
12. ALL OUTSIDE FIRE ALARM DEVICES SHALL BE CSFM LISTED AS WEATHERPROOF TYPE.
13. EXISTING CAMPUS FIRE ALARM SYSTEM SHALL NOT BE DISCONNECTED OR TAKEN OUT OF SERVICE WITHOUT WRITTEN PERMISSION FROM SCHOOL DISTRICT. 48 HOUR NOTICE SHALL PROVIDED TO LOCAL FIRE AUTHORITY PRIOR TO FIRE ALARM SYSTEM SHUTDOWN.
14. ALL FIRE ALARM WIRING SHALL BE CONTINUOUS WITHOUT SPLICES AND TERMINATED IN TERMINAL BLOCKS OF THE DEVICE OR FIRE ALARM APPROVED TERMINAL BLOCKS IN TERMINAL CABINETS OR JUNCTION BOXES.
15. ALL FIRE ALARM WIRING INSTALLED IN UNDERGROUND CONDUIT OR OTHER WET LOCATIONS SHALL BE UL LISTED FOR WET LOCATIONS.
16. ALL WIRING TO BE RUN IN FIRE ALARM DEDICATED RACEWAY. ALL NEW FA WIRING SHALL BE INSTALLED IN CONCEALED CONDUIT MINIMUM SIZE 3/4" U.O.N. EXPOSED WIRING IN OFFICES/ CLASSROOMS AND PUBLIC AREAS SHALL BE IN WIREMOLD V500 SERIES COMPLETE WITH ALL ACCESSORIES OR EQUAL AS APPROVED BY ARCHITECT.
17. ALL SHIELDS TO BE CONTINUOUS, DRY AND FREE FROM ALL GROUNDS AND SHORTS.
18. THE FIRE ALARM SYSTEM SHALL BE CONNECTED TO THE EXISTING CAMPUS UL LISTED CENTRAL MONITORING STATION.

(N)FIRE ALARM CONTROL PANEL BATTERY CALCULATIONS

PANEL MODULES

QTY	DESCRIPTION	STANDBY EACH	STANDBY TOTAL	ALARM EACH	ALARM TOTAL
1	(E)MXL-IQ	0.4500	0.4500	0.5000	0.5000
	PANEL STANDBY CURRENT		0.4500		
	PANEL ALARM CURRENT				0.5000

FIELD DEVICES

QTY	DESCRIPTION	STANDBY EACH	STANDBY TOTAL	ALARM EACH	ALARM TOTAL
4	REMOTE POWER SUPPLY - PS 12/24 M8	0.0750	0.3000	0.0750	0.3000
9	ADDRESSABLE DOUBLE ACTION PULL STATION	0.0010	0.0090	0.0010	0.0090
141	ADDRESSABLE PHOTOELECTRIC SMOKE DETECTOR	0.0008	0.1128	0.0008	0.1128
6	ADDRESSABLE HEAT DETECTOR	0.0008	0.0048	0.0008	0.0048
1	ADDRESSABLE MONITOR MODULE	0.0020	0.0020	0.0020	0.0020
2	ADDRESSABLE CONTROL RELAYS	0.0150	0.0300	0.0190	0.0380
9	DUCT SMOKE DETECTOR	0.0008	0.0072	0.0008	0.0072
1	(E)DOOR HOLD OPEN DEVICE	0.0200	0.0200	0.0200	0.0200
	DEVICE STANDBY CURRENT		0.4858		
	DEVICE ALARM CURRENT				0.4938

TOTAL SYSTEM CURRENT

DESCRIPTION	STANDBY	ALARM
CONTROL PANEL	0.4500	0.5000
FIELD DEVICES	0.4858	0.4938
TOTAL STANDBY CURRENT	0.9358	
X24 HOUR STANDBY	22.4592	
TOTAL ALARM CURRENT		0.9938
5 MINUTES OF ALARM (X.083)		0.0825
TOTAL BATTERY REQUIREMENT		22.5417
*BATTERY SUPPLIED		(2) 55AH

* REPLACE EXISTING BATTERY WITH NEW CAPACITY AS SHOWN

REVISION	DESCRIPTION	INITIAL	DATE
	ISSUED FOR PROGRESS REVIEW		
	ISSUED FOR PLAN CHECK		
	ISSUED FOR PERMIT		
	ISSUED FOR BID		
	ISSUED FOR CONSTRUCTION		

SEAL:

REGISTERED PROFESSIONAL ENGINEER — JOSE L. NE — No. E 17369 Exp. 9-30-10 — ELECTRICAL — STATE OF CALIFORNIA

CONSULTANT:

WHM INCORPORATED
Engineering Consultants
1605 School Street
Moraga, CA 94556
Tel (925)376-2002 • Fax (925)376-2004
cad@whminc.com
09-010

INTERACTIVE RESOURCES
ARCHITECTURE • PLANNING • ENGINEERING
117 PARK PLACE
POINT RICHMOND
CALIFORNIA 94801
(510) 236-7435
(FAX) 232-5325
http//www.intres.com

PROJECT:

APPLIED ARTS REMODEL

CONTRA COSTA COLLEGE
2600 MISSION BELL DR.
SAN PABLO, CA.

CONTRA COSTA COMMUNITY COLLEGE DISTRICT

SHEET TITLE:

ELECTRICAL FIRE ALARM NOTES CALCS AND DETAILS

PROJ. NO.	2008-058.01
	PREPARATION AND REVIEW
DRAWN BY	DM/LC
DESIGNER	JWE
PROJ. MGR.	
PEER REVIEW	
SHEET NUMBER:	

E4.3

NUMBER: OF:

06/17/11 12:30:22 PM C:\USERS\MIKE MAHONEY\DESKTOP\CONTRA COSTA FINE ARTS REMODEL - CAD WORK 5-11\CAD FILES\092809 DSA PROGRESS\09016E4.3.DWG
C:\Users\Mike Mahoney\Desktop\Contra Costa Fine Arts Remodel - CAD Work 5-11\CAD files\092809 DSA PROGRESS\09016E4.3.dwg 6/17/2011 12:29 PM Mike Mahoney
FILE: P:\2008\08-058_CCC Arts\09016E4.3.dwg DWG 07/06/09 at 09:19

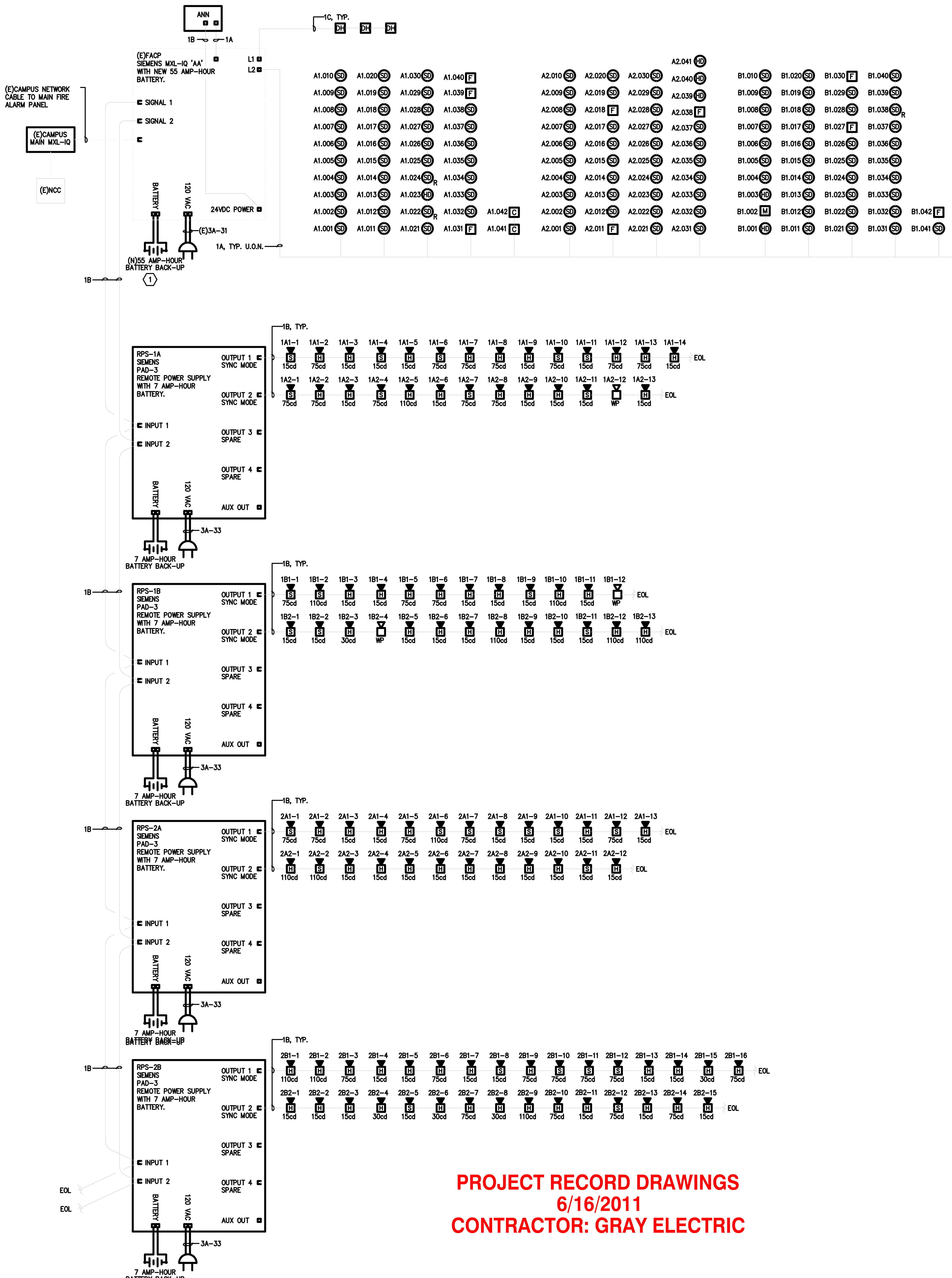

PROJECT RECORD DRAWINGS
6/16/2011
CONTRACTOR: GRAY ELECTRIC

1 ELECTRICAL FIRE ALARM RISER DIAGRAM
NOT TO SCALE

SHEET NOTES

(1) REPLACE EXISTING BATTERY WITH NEW AS SHOWN.

FIRE ALARM VOLTAGE DROP (VD) CALCULATION

PROJECT NAME: CONTRA COSTA COLLEGE APPLIED ARTS BUILDING

NOTIFICATION CIRCUIT #: 1A1

DEVICE #	1A1-1	1A1-2	1A1-3	1A1-4	1A1-5	1A1-6	1A1-7	1A1-8	1A1-9	1A1-10
GAUGE WIRE	12	12	12	12	12	12	12	12	12	12
DISTANCE (FT)	20	31	37	30	38	26	48	2	65	17
AMPS OF DEVICE	0.06	0.15	0.08	0.06	0.08	0.165	0.15	0.15	0.08	0.165
TOTAL AMPS@DEV.	1.58	1.52	1.37	1.29	1.23	1.15	0.985	0.835	0.685	0.605
VOLT. DROP @ DEV.	0.1045	0.1559	0.1677	0.1280	0.1546	0.0989	0.1564	0.0055	0.1473	0.0340

DEVICE #	1A1-11	1A1-12	1A1-13	1A1-14
GAUGE WIRE	12	12	12	12
DISTANCE (FT)	48	30	60	15
AMPS OF DEVICE	0.06	0.15	0.15	0.08
TOTAL AMPS@DEV.	0.44	0.38	0.23	0.08
VOLT. DROP @ DEV.	0.0699	0.0377	0.0456	0.0040

		WIRE SIZE	RESIS. /M FT.	CIRC. MILS.	
TOTAL CKT. AMPS	1.58 AMPS	10	1.24	10380	
TOTAL CKT V DROP =	1.310 VDC	12	1.59	6530	** FORMULA **
		14	2.52	4110	
CKT VOLTAGE =	24	16	4.02	2580	I * FEET * 21.6
		18	6.39	1620	-----------
% VOLTAGE DROP=	5.5%	20	10.1	1020	C.M.

NOTIFICATION CIRCUIT #: 2A1

DEVICE #	2A1-1	2A1-2	2A1-3	2A1-4	2A1-5	2A1-6	2A1-7	2A1-8	2A1-9	2A1-10
GAUGE WIRE	12	12	12	12	12	12	12	12	12	12
DISTANCE (FT)	101	59	8	83	10	77	59	10	47	17
AMPS OF DEVICE	0.165	0.15	0.08	0.08	0.15	0.22	0.165	0.06	0.06	0.06
TOTAL AMPS@DEV.	1.515	1.35	1.2	1.12	1.04	0.89	0.67	0.505	0.445	0.385
VOLT. DROP @ DEV.	0.5061	0.2635	0.0318	0.3075	0.0344	0.2267	0.1308	0.0167	0.0692	0.0216

DEVICE #	2A1-11	2A1-12	2A1-13
GAUGE WIRE	12	12	12
DISTANCE (FT)	23	8	19
AMPS OF DEVICE	0.08	0.165	0.08
TOTAL AMPS@DEV.	0.325	0.245	0.08
VOLT. DROP @ DEV.	0.0247	0.0065	0.0050

		WIRE SIZE	RESIS. /M FT.	CIRC. MILS.	
TOTAL CKT. AMPS	1.515 AMPS	10	1.24	10380	
TOTAL CKT V DROP =	1.644 VDC	12	1.59	6530	** FORMULA **
		14	2.52	4110	
CKT VOLTAGE =	24	16	4.02	2580	I * FEET * 21.6
		18	6.39	1620	-----------
% VOLTAGE DROP=	6.9%	20	10.1	1020	C.M.

NOTIFICATION CIRCUIT #: 1A2

DEVICE #	1A2-1	1A2-2	1A2-3	1A2-4	1A2-5	1A2-6	1A2-7	1A2-8	1A2-9	1A2-10
GAUGE WIRE	12	12	12	12	12	12	12	12	12	12
DISTANCE (FT)	65	11	35	50	53	10	63	46	9	32
AMPS OF DEVICE	0.165	0.15	0.08	0.165	0.194	0.08	0.165	0.15	0.08	0.08
TOTAL AMPS@DEV.	1.511	1.346	1.196	1.116	0.951	0.757	0.677	0.512	0.362	0.282
VOLT. DROP @ DEV.	0.3249	0.0490	0.1385	0.1846	0.1667	0.0250	0.1411	0.0779	0.0108	0.0298

DEVICE #	1A2-11	1A2-12	1A2-13
GAUGE WIRE	12	12	12
DISTANCE (FT)	25	20	40
AMPS OF DEVICE	0.06	0.062	0.08
TOTAL AMPS@DEV.	0.202	0.142	0.08
VOLT. DROP @ DEV.	0.0167	0.0094	0.0106

		WIRE SIZE	RESIS. /M FT.	CIRC. MILS.	
TOTAL CKT. AMPS	1.511 AMPS	10	1.24	10380	
TOTAL CKT V DROP =	1.185 VDC	12	1.59	6530	** FORMULA **
		14	2.52	4110	
CKT VOLTAGE =	24	16	4.02	2580	I * FEET * 21.6
		18	6.39	1620	-----------
% VOLTAGE DROP=	4.9%	20	10.1	1020	C.M.

NOTIFICATION CIRCUIT #: 2A2

DEVICE #	2A2-1	2A2-2	2A2-3	2A2-4	2A2-5	2A2-6	2A2-7	2A2-8	2A2-9	2A2-10
GAUGE WIRE	12	12	12	12	12	12	12	12	12	12
DISTANCE (FT)	11	90	83	71	27	28	18	9	37	11
AMPS OF DEVICE	0.194	0.22	0.08	0.08	0.08	0.08	0.08	0.08	0.08	0.08
TOTAL AMPS@DEV.	1.194	1	0.78	0.7	0.62	0.54	0.46	0.38	0.3	0.22
VOLT. DROP @ DEV.	0.0434	0.2977	0.2141	0.1644	0.0554	0.0500	0.0274	0.0113	0.0367	0.0080

DEVICE #	2A2-11	2A2-12
GAUGE WIRE	12	12
DISTANCE (FT)	51	38
AMPS OF DEVICE	0.06	0.08
TOTAL AMPS@DEV.	0.14	0.08
VOLT. DROP @ DEV.	0.0236	0.0101

		WIRE SIZE	RESIS. /M FT.	CIRC. MILS.	
TOTAL CKT. AMPS	1.194 AMPS	10	1.24	10380	
TOTAL CKT V DROP =	0.942 VDC	12	1.59	6530	** FORMULA **
		14	2.52	4110	
CKT VOLTAGE =	24	16	4.02	2580	I * FEET * 21.6
		18	6.39	1620	-----------
% VOLTAGE DROP=	3.9%	20	10.1	1020	C.M.

NOTIFICATION CIRCUIT #: 1B1

DEVICE #	1B1-1	1B1-2	1B1-3	1B1-4	1B1-5	1B1-6	1B1-7	1B1-8	1B1-9	1B1-10
GAUGE WIRE	12	12	12	12	12	12	12	12	12	12
DISTANCE (FT)	31	20	41	40	33	15	26	45	26	26
AMPS OF DEVICE	0.165	0.22	0.08	0.08	0.15	0.15	0.08	0.08	0.06	0.194
TOTAL AMPS@DEV.	1.401	1.236	1.016	0.936	0.856	0.706	0.556	0.476	0.396	0.336
VOLT. DROP @ DEV.	0.1437	0.0818	0.1378	0.1238	0.0934	0.0350	0.0478	0.0709	0.0341	0.0289

DEVICE #	1B1-11	1B1-12
GAUGE WIRE	12	12
DISTANCE (FT)	33	15
AMPS OF DEVICE	0.08	0.062
TOTAL AMPS@DEV.	0.142	0.062
VOLT. DROP @ DEV.	0.0155	0.0031

		WIRE SIZE	RESIS. /M FT.	CIRC. MILS.	
TOTAL CKT. AMPS	1.401 AMPS	10	1.24	10380	
TOTAL CKT V DROP =	0.816 VDC	12	1.59	6530	** FORMULA **
		14	2.52	4110	
CKT VOLTAGE =	24	16	4.02	2580	I * FEET * 21.6
		18	6.39	1620	-----------
% VOLTAGE DROP=	3.4%	20	10.1	1020	C.M.

NOTIFICATION CIRCUIT #: 2B1

DEVICE #	2B1-1	2B1-2	2B1-3	2B1-4	2B1-5	2B1-6	2B1-7	2B1-8	2B1-9	2B1-10
GAUGE WIRE	12	12	12	12	12	12	12	12	12	12
DISTANCE (FT)	15	53	14	37	7	58	50	58	33	8
AMPS OF DEVICE	0.194	0.194	0.15	0.08	0.08	0.15	0.08	0.06	0.15	0.165
TOTAL AMPS@DEV.	2.115	1.921	1.727	1.577	1.497	1.417	1.267	1.187	1.127	0.977
VOLT. DROP @ DEV.	0.1049	0.3368	0.0800	0.1930	0.0347	0.2719	0.2095	0.2277	0.1230	0.0259

DEVICE #	2B1-11	2B1-12	2B1-13	2B1-14	2B1-15	2B1-16
GAUGE WIRE	12	12	12	12	12	12
DISTANCE (FT)	51	13	17	7	30	64
AMPS OF DEVICE	0.165	0.165	0.15	0.08	0.102	0.15
TOTAL AMPS@DEV.	0.812	0.647	0.482	0.332	0.252	0.15
VOLT. DROP @ DEV.	0.1370	0.0278	0.0271	0.0077	0.0250	0.0318

		WIRE SIZE	RESIS. /M FT.	CIRC. MILS.	
TOTAL CKT. AMPS	2.115 AMPS	10	1.24	10380	
TOTAL CKT V DROP =	1.864 VDC	12	1.59	6530	** FORMULA **
		14	2.52	4110	
CKT VOLTAGE =	24	16	4.02	2580	I * FEET * 21.6
		18	6.39	1620	-----------
% VOLTAGE DROP=	7.8%	20	10.1	1020	C.M.

NOTIFICATION CIRCUIT #: 1B2

DEVICE #	1B2-1	1B2-2	1B2-3	1B2-4	1B2-5	1B2-6	1B2-7	1B2-8	1B2-9	1B2-10
GAUGE WIRE	12	12	12	12	12	12	12	12	12	12
DISTANCE (FT)	67	20	21	31	35	95	74	8	65	29
AMPS OF DEVICE	0.06	0.06	0.102	0.062	0.08	0.08	0.08	0.194	0.08	0.08
TOTAL AMPS@DEV.	1.326	1.266	1.206	1.104	1.042	0.962	0.882	0.802	0.608	0.528
VOLT. DROP @ DEV.	0.2939	0.0838	0.0838	0.1132	0.1206	0.3023	0.2159	0.0212	0.1307	0.0506

DEVICE #	1B2-11	1B2-12	1B2-13
GAUGE WIRE	12	12	12
DISTANCE (FT)	8	46	8
AMPS OF DEVICE	0.06	0.194	0.194
TOTAL AMPS@DEV.	0.448	0.388	0.194
VOLT. DROP @ DEV.	0.0119	0.0590	0.0051

		WIRE SIZE	RESIS. /M FT.	CIRC. MILS.	
TOTAL CKT. AMPS	1.326 AMPS	10	1.24	10380	
TOTAL CKT V DROP =	1.492 VDC	12	1.59	6530	** FORMULA **
		14	2.52	4110	
CKT VOLTAGE =	24	16	4.02	2580	I * FEET * 21.6
		18	6.39	1620	-----------
% VOLTAGE DROP=	6.2%	20	10.1	1020	C.M.

NOTIFICATION CIRCUIT #: 2B2

DEVICE #	2B2-1	2B2-2	2B2-3	2B2-4	2B2-5	2B2-6	2B2-7	2B2-8	2B2-9	2B2-10
GAUGE WIRE	12	12	12	12	12	12	12	12	12	12
DISTANCE (FT)	35	62	18	55	32	21	20	19	30	27
AMPS OF DEVICE	0.08	0.08	0.08	0.102	0.06	0.102	0.15	0.102	0.194	0.15
TOTAL AMPS@DEV.	1.655	1.575	1.495	1.415	1.313	1.253	1.151	1.001	0.899	0.705
VOLT. DROP @ DEV.	0.1916	0.3230	0.0890	0.2574	0.1390	0.0870	0.0761	0.0629	0.0892	0.0630

DEVICE #	2B2-11	2B2-12	2B2-13	2B2-14	2B2-15
GAUGE WIRE	12	12	12	12	12
DISTANCE (FT)	56	39	43	30	7
AMPS OF DEVICE	0.08	0.165	0.08	0.15	0.08
TOTAL AMPS@DEV.	0.555	0.475	0.31	0.23	0.08
VOLT. DROP @ DEV.	0.1028	0.0613	0.0441	0.0228	0.0019

		WIRE SIZE	RESIS. /M FT.	CIRC. MILS.	
TOTAL CKT. AMPS	1.655 AMPS	10	1.24	10380	
TOTAL CKT V DROP =	1.611 VDC	12	1.59	6530	** FORMULA **
		14	2.52	4110	
CKT VOLTAGE =	24	16	4.02	2580	I * FEET * 21.6
		18	6.39	1620	-----------
% VOLTAGE DROP=	6.7%	20	10.1	1020	C.M.

REVISION	DESCRIPTION	INITIAL	DATE

ISSUED FOR PROGRESS REVIEW	
ISSUED FOR PLAN CHECK – DSA	07/01/09
ISSUED FOR PERMIT	
ISSUED FOR BID	
ISSUED FOR CONSTRUCTION	

SEAL: REGISTERED PROFESSIONAL ENGINEER JOSE L. WE No. E 17369 Exp. 9-30-10 ELECTRICAL STATE OF CALIFORNIA

CONSULTANT:
WHM INCORPORATED
Engineering Consultants
1605 School Street
Moraga, CA 94556
Tel (925)376-2902 * Fax (925)376-2904
cad@whminc.com
09-010

INTERACTIVE RESOURCES
ARCHITECTURE • PLANNING • ENGINEERING
117 PARK PLACE
POINT RICHMOND
CALIFORNIA 94801
(510) 236-7435
(FAX) 232-5325
http//www.intres.com

PROJECT:
APPLIED ARTS REMODEL

CONTRA COSTA COLLEGE
2600 MISSION BELL DR.
SAN PABLO, CA.

CONTRA COSTA COMMUNITY COLLEGE DISTRICT

SHEET TITLE:
FIRE ALARM RISER DIAGRAMS AND CALCULATIONS

PROJ. NO.	2008-090.01
PREPARATION AND REVIEW	
DRAWN BY	DM/LC
DESIGNER	JWE
PROJ. MGR.	
PEER REVIEW	

SHEET NUMBER:
E4.4
NUMBER: OF:

FILE: F:\2009\09-010_CCC Arts\09010E4.4.dwg.DWG 07/06/09 at 09:20

06/17/11 12:31:25 PM C:\USERS\MIKE MAHONEY\DESKTOP\CONTRA COSTA FINE ARTS REMODEL - CAD WORK 5-11\CAD FILES\092809 DSA PROGRESS\09010E4.4.DWG

SCHOOL EQUIPMENT ANCHORAGE NOTES

A. ALL MECHANICAL AND ELECTRICAL EQUIPMENT SHALL BE BRACED OR ANCHORED TO RESIST A HORIZONTAL FORCE ACTING IN ANY DIRECTION USING THE FOLLOWING CRITERIA:

B. THE TOTAL DESIGN LATERAL SEISMIC FORCE SHALL BE DETERMINED FROM SECTION 1613A, CALIFORNIA BUILDING CODE (CBC) 2007. FORCES SHALL BE APPLIED IN THE HORIZONTAL DIRECTIONS, WHICH RESULT IN THE MOST CRITICAL LOADINGS FOR DESIGN.

C. THE VALUE OF *Ap* (COMPONENT AMPLIFICATION FACTOR) AND *Rp* (COMPONENT RESPONSE MODIFICATION FACTOR) OF SECTION 1613A SHALL BE SELECTED FROM ASCE 7 CHAPTER 13. THE VALUE OF *Ip* (SEISMIC IMPORTANCE FACTOR) AND *Ca* (SEISMIC COEFFICIENT) SHALL BE SELECTED FROM ASCE 7 CHAPTER 13, 2007 CBC RESPECTIVELY.

D. WHERE ANCHORAGE DETAILS ARE NOT SHOWN ON THE DRAWINGS, THE FIELD INSTALLATION SHALL BE SUBJECT TO THE APPROVAL OF THE MECHANICAL/ELECTRICAL ENGINEER AND THE FIELD REPRESENTATIVE OF THE DIVISION OF THE STATE ARCHITECT (DSA).

PROJECT RECORD DRAWINGS
6/16/2011
CONTRACTOR: THE ENERGY STORE

GENERAL NOTES

1. ENTIRE INSTALLATION SHALL CONFORM TO THE REQUIREMENTS OF THE 2007 CALIFORNIA BIULDING CODE, 2007 CALIFORNIA MECHANICAL CODE, 2007 CALIFORNIA PLUMBING CODE, AND ALL OTHER APPLICABLE CODES AND REGULATIONS, INCLUDING LATEST CALIFORNIA ENERGY CONSERVATION STANDARDS.
2. COORDINATE ENTIRE INSTALLATION OF THE HVAC SYSTEM WITH THE WORK OF ALL OTHER TRADES PRIOR TO ANY FABRICATION OR INSTALLATION. PROVIDE ALL FITTINGS, OFFSETS, AND TRANSITIONS AS REQUIRED FOR A COMPLETE WORKABLE INSTALLATION.
3. COORDINATE THE LOCATIONS OF ALL CEILING DIFFUSERS, REGISTERS AND GRILLES WITH THE ARCHITECTURAL REFLECTIVE CEILING PLAN, ELECTRICAL LIGHTING LAYOUT AND ARCHITECTURAL ROOM ELEVATIONS.
4. COORDINATE THE LOCATION OF ALL ROOF OPENINGS AND THE LOCATION OF ALL ROOF MOUNTED EQUIPMENT WITH THE STRUCTURAL AND ARCHITECTURAL PLANS PRIOR TO ANY INSTALLATION. PROVIDE THE EQUIPMENT WEIGHTS, AND PLATFORM AND CURB SIZES.
5. PLATFORMS, CURBS, AND FLASHINGS FOR MECHANICAL EQUIPMENT SHALL BE AS INDICATED ON THE STRUCTURAL AND ARCHITECTURAL PLANS, UNLESS NOTED OTHERWISE.
6. ALL EQUIPMENT SHALL BE INSTALLED IN STRICT ACCORDANCE WITH THE EQUIPMENT MANUFACTURER'S RECOMMENDATIONS. PROVIDE ALL FITTINGS, TRANSITIONS, DAMPERS, VALVES, AND OTHER DEVICES REQUIRED FOR A COMPLETE WORKABLE INSTALLATION.
7. MAINTENANCE LABEL SHALL BE AFFIXED TO ALL MECHANICAL EQUIPMENT AND A MAINTENANCE MANUAL SHALL BE PROVIDED FOR THE OWNER'S USE.
8. CONTROL SCHEMATICS ARE FOR SEQUENCE ONLY. REFER TO ELECTRICAL DRAWINGS AND SPECIFICATIONS FOR ALL ELECTRICAL DEVICES REQUIRED.
9. ALL LINE VOLTAGE WIRING SHALL BE INSTALLED IN CONDUIT. ALL CONDUIT AND LINE VOLTAGE WIRING, INCLUDING FINAL CONNECTIONS, SHALL BE FURNISHED AND INSTALLED BY THE ELECTRICAL CONTRACTOR AS INDICATED ON THE ELECTRICAL DRAWINGS OR SPECIFIED IN THE ELECTRICAL SECTION OF THE SPECIFICATIONS. ALL ELECTRICAL WORK SHALL BE INSTALLED IN ACCORDANCE WITH ALL APPLICABLE CODES AND REGULATIONS OF ALL GOVERNING BODIES HAVING JURISDICTION THEREOF.
10. ALL THERMOSTATS SHALL HAVE LOCKABLE COVERS AND SHALL BE OF THE AUTOMATIC CHANGEOVER TYPE TO SEQUENCE HEATING OR COOLING. SET POINT RANGE SHALL BE 10 DEGREES F. BETWEEN FULL HEATING AND COOLING THEY SHALL HAVE THE CAPABILITY OF TERMINATING ALL HEATING AT A ALL HEATING AT A TEMPERATURE NO MORE THAN 70 DEGREES F., AND COOLING AT A TEMPERATURE NOT LESS THAN 78 DEGREES F. ADJUSTABLE TEMPERATURE DIFFERENTIAL SHALL BE 1– 1/2 DEGREES F. CONTROL LIMITS SHALL BE FROM 55 DEGREES F. TO 85 DEGREES F. MOUNT AT 48 INCHES ABOVE FLOOR OR AS REQUIRED BY LOCAL AUTHORITIES OR HANDICAP CODES.
11. ALL DUCTWORK SHALL BE SHEET METAL CONSTRUCTED ERECTED, AND TESTED IN ACCORDANCE WITH THE MOST RESTRICTIVE OF LOCAL REGULATIONS, PROCEDURES DETAILED IN THE ASHRAE HANDBOOK OF FUNDAMENTALS, CHAPTER 6 OF UNIFORM MECHANICAL CODE, OR THE APPLICABLE STANDARDS ADOPTED BY THE SHEET METAL AND AIR CONDITIONING CONTRACTORS NATIONAL ASSOCIATION.
12. DUCTWORK HANDLING CONDITIONED AIR SHALL BE INSULATED OR LINED. SUPPLY DUCT INSULATION SHALL BE 2" THICK, 3/4 LB./CUBIC FT. DENSITY. RETURN DUCT INSULATION SHALL BE 1" THICK 3/4 LB./CU.FT. DENSITY. ALL DUCT SIZES ARE INTERIOR DUCT SIZES. ALL DUCT JOINTS SHALL BE SEALED PER U.M.C. CHAPTER 6 REQUIREMENTS.
13. MANUAL VOLUME DAMPERS SHALL BE PROVIDED IN ALL DUCT BRANCHES TO INDIVIDUAL DIFFUSERS, GRILLES AND REGISTERS.
14. ALL EQUIPMENT, DUCTS, PIPING, AND OTHER DEVICES AND MATERIALS INSTALLED OUTSIDE OF THE BUILDING OR OTHERWISE EXPOSED TO THE WEATHER SHALL BE COMPLETELY WEATHER–PROOFED.
15. AUTOMATIC FIRE/SMOKE DAMPER REQUIREMENTS ARE AS FOLLOWS:
    A) PROVIDE AUTOMATIC FIRE/SMOKE DAMPERS AT ALL PENETRATIONS OF FIRE–RATED CEILINGS AND WALLS THROUGHOUT. CONTRACTOR SHALL COORDINATE FIRE–RATED AREAS WITH THE ARCHITECTURAL DRAWINGS PRIOR TO BID. THIS NOTE SHALL TAKE PRECEDENCE OVER ANY OMMISSIONS ON THE DRAWINGS. SEE SPECIFICATIONS.
    B) LOCATION OF FIRE–RATED CEILINGS AND WALLS ARE AS INDICATED ON THE ARCHITECTURAL DRAWINGS.
16. BEFORE BIDDING ON THIS WORK, THE CONTRACTOR SHALL MAKE A CAREFUL EXAMINATION OF THE PREMISES, EXISTING EQUIPMENT AND SERVICES. HE SHALL DEFINITELY DETERMINE IN ADVANCE, THE METHODS OF INSTALLING AND CONNECTING THE NEW EQUIPMENT WITH ITS ASSOCIATED DUCTWORK, THE MEANS TO BE PROVIDED FOR GETTING THE EQUIPMENT AND MATERIALS INTO PLACE AND SHALL MAKE HIMSELF THOROUGHLY FAMILIAR WITH ALL OF THE REQUIREMENTS OF THE PROJECT.
17. THESE DRAWINGS SHALL BE READ IN CONJUNCTION WITH AND BE CONSIDERED TO BE PART OF A SEPARATE AND COMPLETE MECHANICAL SPECIFICATION.
18. ALL DIMENSIONS SHOWN ON THESE PLANS ARE APPROXIMATE AND MUST BE CONFIRMED ON SITE.
19. ALL ROOF MOUNTED EQUIPMENT SHALL BE LABELED AS TO THE SPACE IT SERVES.
20. ALL HVAC EQUIPMENT SHALL BE CERTIFIED BY THE CALIFORNIA ENERGY COMMISSION TO COMPLY WITH EFFICIENCY STANDARDS.
21. AC UNITS PROVIDED WITH ECONOMY CYCLE DAMPERS SHALL HAVE DAMPERS SET UP TO CLOSE AUTOMATICALLY ON FAN SHUTDOWN.
22. PRIOR TO OCCUPANCY, THE ENTIRE H.V.A.C. SYSTEMS SHALL BE BALANCED IN ACCORDANCE WITH (AABC) ASSOCIATED AIR BALANCE COUNCIL STANDARDS BY INDEPENDANT AIR BALANCE CONTRACTOR. CERTIFICATION SHALL BE PROVIDED BY THE CONTRACTOR FOR AIR BALANCE OF A.C. SYSTEMS AND FRESH AIR VENTILATION AS REQUIRED BY THE STATE ENERGY REGULATIONS.
23. CONTRACTOR TO PROVIDE AIR BALANCE REPORT TO ENGINEER.
24. CONTROLS SHALL BE PROVIDED TO PROVIDE THE MINIMUM RATE OF OUTDOOR AIR REQUIRED BY THE STATE ENERGY REGULATIONS.
25. CONTRACTOR TO SUBMIT ALL EQUIPMENT, DUCTWORK, AIR DISTRIBUTION DEVICES, AND OTHER ACCESORIES, AND SHOP DRAWINGS TO THE ARCHITECT FOR APPROVAL PRIOR TO ANY ORDERING OF SUCH ITEMS.

ABBREVIATIONS

ABBREV	DESCRIPTION	ABBREV	DESCRIPTION
∠	ANGLE	ID	INSIDE DIAMETER OR INSIDE DIMENSION
@	AT	IE	INVERT ELEVATION
℄	CENTERLINE	IN	INCH
ø	DIAMETER, ROUND OR PHASE	KW	KILOWATTS
ABV	ABOVE	LBS	POUNDS
AC	AIR CONDITIONING	LDB	LEAVING DRY BULB
ACCU	AIR COOLED CONDENSING UNIT	LF	LINEAR FEET
AD	ACCESS DOOR	LWB	LEAVING WET BULB
AFF	ABOVE FINISHED FLOOR	LVL	LEVEL
AG	ABOVE GRADE	MAX	MAXIMUM
AHU	AIR HANDLING UNIT	MBH	THOUSAND BTU PER HOUR
AL	ACOUSTIC LINING	MCA	MINIMUM CIRCUIT AMPACITY
AMPS	AMPERES	MCC	MOTOR CONTROL CENTER
AP	ACCESS PANEL	MECH	MECHANICAL
APB	ADJUSTABLE PITCH BLADES	MEZZ	MEZZANINE
APD	AIR PRESSURE DROP	MFG	MANUFACTURING
ARCH	ARCHITECT OR ARCHITECTURAL	MFR	MANUFACTURER
ASSY	ASSEMBLY	MFS	MAXIMUM FUSE SIZE
AUTO	AUTOMATIC	MIN	MINIMUM
AVG	AVERAGE	MISC	MISCELLANEOUS
BDD	BACKDRAFT DAMPER	MTD	MOUNTED
BEL	BELOW	(N)	NEW
BG	BELOW GRADE	NA	NOT APPLICABLE
BHP	BRAKE HORSEPOWER	NC	NORMALLY CLOSED OR NOISE CRITERIA
BLDG	BUILDING	NFA	NET FREE AREA
BSMT	BASEMENT	NIC	NOT IN CONTRACT
BTU	BRITISH THERMAL UNIT	NO	NORMALLY OPEN OR NUMBER
BTUH	BRITISH THERMAL UNIT PER HOUR	NTS	NOT TO SCALE
CALCS	CALCULATIONS	OA	OUTSIDE AIR
CAP	CAPACITY	OBD	OPPOSED BLADE DAMPER
CAT	CATEGORY	OD	OUTSIDE DIAMETER OR OUTSIDE DIMENSION
CC	COOLING COIL	OPER	OPERATING
CFF	CAPPED FOR FUTURE	OV	OUTLET VELOCITY
CFH	CUBIC FEET PER HOUR	P	PUMP
CFM	CUBIC FEET PER MINUTE	PD	PRESSURE DROP
CLG	CEILING	PENTH	PENTHOUSE
COL	COLUMN	PH	PHASE
CONC	CONCRETE	PKG	PACKAGE
CONN	CONNECT OR CONNECTION	PLBG	PLUMBING
CONT	CONTINUATION	PNL	PANEL
CTE	CONNECT TO EXISTING	PSI	POUNDS PER SQUARE INCH
DB	DECIBELS	PSIG	POUNDS PER SQUARE INCH GAUGE
DIA	DIAMETER	QTY	QUANTITY
DIM	DIMENSION	(R)	RELOCATED
DL	DOOR LOUVERS	RA	RETURN AIR
DN	DOWN	REF	REFERENCE
DTL	DETAIL	REQD	REQUIRED
DWG	DRAWING	RF	RETURN FAN
(E)	EXISTING	RM	ROOM
EA	EACH OR EXHAUST AIR	RPM	REVOLUTIONS PER MINUTE
EAT	ENTERING AIR TEMPERATURE	SA	SUPPLY AIR
EDB	ENTERING DRY BULB	SCC	SENSIBLE COOLING CAPACITY
EER	ENERGY EFFICIENCY RATIO	SCHED	SCHEDULE
EF	EXHAUST FAN	SECT	SECTION
EFF%	EFFICIENCY (PERCENTAGE)	SF	SQUARE FEET OR SUPPLY FAN
ELEC	ELECTRIC OR ELECTRICAL	SHT	SHEET
EL	ELEVATION	SIM	SIMILAR
ELEV	ELEVATOR	SJ	SEISMIC JOINT
EMGY	EMERGENCY	SL	SLOPE
ENGR	ENGINEER	SP	STATIC PRESSURE
EQ	EQUAL	SPECS	SPECIFICATIONS
EQPT	EQUIPMENT	SQ	SQUARE
ESP	EXTERNAL STATIC PRESSURE	ST	SOUND TRAP
EWB	ENTERING WET BULB	STD	STANDARD
(F)	FUTURE	STL	STEEL
°F	DEGREE FAHRENHEIT	STRUCT	STRUCTURAL
F	FILTER	SYST	SYSTEM
FC	FLEXIBLE CONNECTION OR FORWARD CURVE	TCC	TOTAL COOLING CAPACITY
FF	FINISHED FLOOR	TCP	TEMPERATURE CONTROL PANEL
FLA	FULL LOAD AMPS	TDH	TOTAL DYNAMIC HEAD
FLR	FLOOR	TEMP	TEMPERATURE
FPM	FEET PER MINUTE	TP	TOTAL PRESSURE
FT	FEET	TYP	TYPICAL
GA	GAUGE	UF	UNDERFLOOR
GAL	GALLONS	UG	UNDERGROUND
GALV	GALVANIZED	UON	UNLESS OTHERWISE NOTED
GC	GENERAL CONTRACTOR	V	VOLTS
GEN	GENERAL	VEL	VELOCITY
GND	GROUND	VIF	VERIFY IN FIELD
GPH	GALLONS PER HOUR	VOL	VOLUME
GPM	GALLONS PER MINUTE	W	WATTS
GRD	GRADE	WT	WEIGHT
GSM	GALVANIZED SHEET METAL	WxH	WIDTH x HEIGHT
HC	HEATING COIL	WxHxD	WIDTH x HEIGHT x DEPTH
HD	HEAD	WxL	WIDTH x LENGTH
HORIZ	HORIZONTAL		
HP	HORSEPOWER		
HR	HOUR		
HT	HEIGHT		
HVAC	HEATING, VENTILATING & AIR CONDITIONING		
HZ	HERTZ		

4

LEGEND

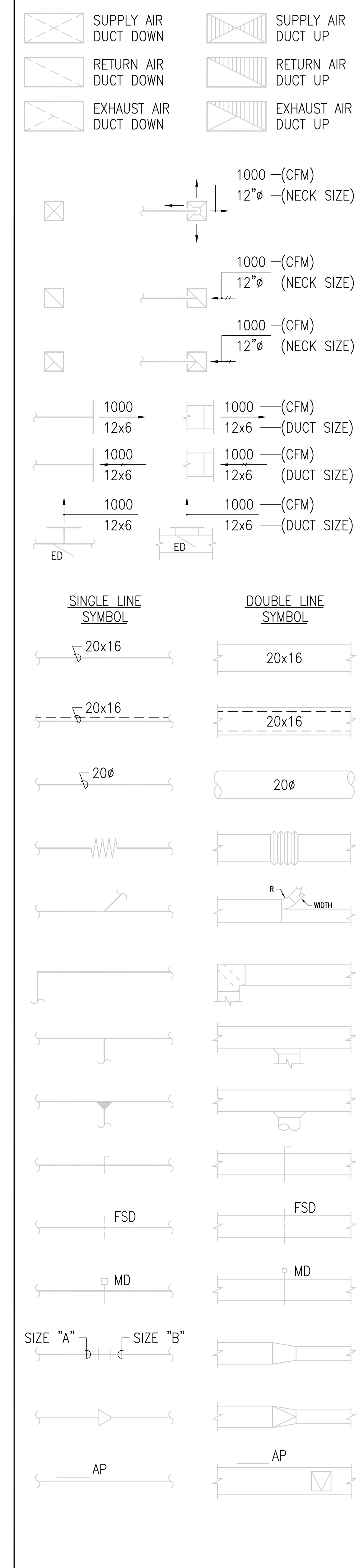

- SUPPLY AIR DUCT UP & DOWN
- RETURN AIR DUCT UP & DOWN
- EXHAUST AIR DUCT UP & DOWN
- CEILING SUPPLY DIFFUSER NUMBER AND DIRECTION OF BLOWS INDICATED BY ARROWS
- RETURN GRILLE DIRECTION OF BLOW INDICATED BY ARROWS
- EXHAUST GRILLE DIRECTION OF BLOW INDICATED BY ARROWS
- SIDEWALL SUPPLY DIFFUSER
- SIDEWALL RETURN DIFFUSER
- SIDEWALL SUPPLY DIFFUSER WITH EXTRACTION DAMPER
- RECTANGULAR DUCTWORK DIMENSION VIEWED x DEPTH
- RECTANGULAR DUCTWORK WITH ACOUSTICAL LINING (INSIDE) DIMENSION VIEWED x (INSIDE) DEPTH, UON
- ROUND DUCTWORK INSIDE DIAMETER, UON
- FLEXIBLE DUCT OR FLEXIBLE CONNECTION
- BRANCH DUCTWORK SPLIT WITH 6 INCH WIDTH AND MINIMUM R = WIDTH OF BRANCH DUCT DOWNSTREAM
- TURNING VANES AIRFOIL TYPE ONLY (ATV)
- RECTANGULAR DUCT TAKEOFF
- ROUND DUCT TAKEOFF WITH CONICAL TAP
- VOLUME DAMPER
- COMBINATION FIRE & SMOKE DAMPER WITH ACCESS PANEL
- MOTORIZED DAMPER WITH ACCESS PANEL
- DUCT TRANSITION
- RECTANGULAR DUCT TO ROUND DUCT TRANSITION
- ACCESS PANEL

SYMBOL	ABBREV	DESCRIPTION
		DETAIL NUMBER / DRAWING NUMBER — DETAIL TAG
		EQUIPMENT TYPE / EQUIPMENT NUMBER — EQUIPMENT TAG
		SHEET NOTE TAG
T		THERMOSTAT
S		DUCT SMOKE DETECTOR SUPPLIED, WIRED, AND MONITORED BY ELECTRICAL, INSTALLED BY MECHANICAL
L	D/L	DOOR LOUVER AND NET FREE AREA (NFA)
U	U/C	DOOR UNDERCUT – 3/4"

REVISION	DESCRIPTION	INITIAL	DATE
	ISSUED FOR PROGRESS REVIEW		05–20–09
	ISSUED FOR PLAN CHECK – DSA		07–01–09
	ISSUED FOR PERMIT		
	ISSUED FOR BID		11–18–09
	ISSUED FOR CONSTRUCTION		

SEAL:

CONSULTANT:

INTERACTIVE
RESOURCES
ARCHITECTURE • PLANNING • ENGINEERING
117 PARK PLACE
POINT RICHMOND
CALIFORNIA 94801
(510) 236–7435
(FAX) 232–5325
http//www.intres.com

PROJECT:

APPLIED ARTS REMODEL

CONTRA COSTA COLLEGE
2600 MISSION BELL DR.
SAN PABLO, CA.

CONTRA COSTA COMMUNITY COLLEGE DISTRICT

SJ ENGINEERS
300 Frank H. Ogawa Plaza
Suite 308
Oakland, CA 94612
Tel: (510) 832–1505
Fax: (510) 832–1507
Job No: 209–0204

SHEET TITLE:

LEGEND, ABBREVIATIONS, GENERAL NOTES MECHANICAL

PROJ. NO. 209–0204

PREPARATION AND REVIEW

DRAWN BY	BD
DESIGNER	AB
PROJ. MGR.	NHJ
PEER REVIEW	

SHEET NUMBER:

M0.1

NUMBER: OF:

C:\Users\Mike Mahoney\Desktop\Contra Costa Fine Arts Remodel – CAD Work 5–11\CAD files\DSA BACK CHECK\M0.1.dwg 6/17/2011 12:10 PM Mike Mahoney

EXISTING SPLIT SYSTEM AIR CONDITIONING UNIT SCHEDULE

EQPT TAG	AREA SERVED	INDOOR MODEL NUMBER	CFM	ESP	EXISTING ELECTRICAL			MIN. OA CFM	OPER WT (LBS)	EQPT TAG	OUTDOOR MODEL NUMBER	COOLING CAPACITY (BTUH)	HEATING CAPACITY (BTUH)	ENERGY EFFICIENCY		OUTDOOR UNIT ELECTRICAL				OPER WT (LBS)	REFRIGERANT PIPING SIZE		REFRIG. TYPE	REMARKS
					V	PH	MCA							SEER	HSPF	VOLTS	PH	MCA	FUSE		LIQUID	SUCTION		
FC 1	CLASSROOM 113	CARRIER FB4ANF060	1800	–	208	1	6.8	–	(E)	CU 1	CARRIER	(E)	(E)	(E)	–	208	1	(E)	(E)	(E)	(E)	(E)	R-22	1 2
FC 2	CLASSROOM 137	CARRIER FB4ANF048	1350	–	208	1	5.4	–	(E)	CU 2	CARRIER	(E)	(E)	(E)	–	208	1	(E)	(E)	(E)	(E)	(E)	R-22	1 3

NOTES

1. REBALANCE (E) DX FAN COIL UNIT TO CFM INDICATED IN THIS SCHEDULE INCLUDING ADJUSTMENTS TO FAN MOTOR BELT DRIVE ASSEMBLY. WHERE (E) FAN MOTORS ARE DIRECT DRIVE MULTI-SPEED TYPE, PROVIDE THE NECESSARY WIRING CONNECTIONS TO INCREASE, OR DECREASE MOTOR SPEED TO OBTAIN INDICATED CFM.
2. EXISTING FAN COIL UNIT AND OUTDOOR CONDENSING UNIT SUPPORTS AND ANCHORAGE TO REMAIN AS CURRENTLY INSTALLED.
3. EXISTING FAN COIL UNIT TO BE RELOCATED. FOR UNIT SUPORTS AND ANCHORAGE REFER TO DETAIL 1/M6.1.

DUCTLESS SPLIT SYSTEM AIR CONDITIONING UNIT SCHEDULE

EQPT TAG	AREA SERVED	INDOOR MODEL NUMBER	CFM	ESP	EXISTING ELECTRICAL			MIN. OA CFM	OPER WT (LBS)	EQPT TAG	OUTDOOR MODEL NUMBER	COOLING CAPACITY (BTUH)	HEATING CAPACITY (BTUH)	ENERGY EFFICIENCY		OUTDOOR UNIT ELECTRICAL				OPER WT (LBS)	REFRIGERANT PIPING SIZE		REFRIG. TYPE	REMARKS
					V	PH	MCA							SEER	HSPF	VOLTS	PH	MCA	FUSE		LIQUID	SUCTION		
FC 3	TI ROOM 213	MITSUBISHI PKA-A18GA	380	–	208	1	0.50	–	–	CU 3	MITSUBISHI PUY-18NHA	18,000	–	14.1	–	208	1	13	15	90	1/4	1/2	R-410a	1

NOTES

1.

DIFFUSER, REGISTER AND GRILLE SCHEDULE

TAG	DESCRIPTION	MANUFACTURER	MODEL NUMBER	NECK SIZE (IN)	FACE SIZE (IN)	MOUNTING TYPE	MAX NC LEVEL	REMARKS
A	CEILING SUPPLY DIFFUSER	TITUS	PCS	2	24x24	T-BAR	30	1
B	CEILING SUPPLY DIFFUSER	TITUS	PCS	2	–	GYP. BD. SURFACE	30	1
C	CEILING RETURN REGISTER	TITUS	PAR	2	24x24	T-BAR	30	1
D	CEILING RELIEF OR EXHAUST GRILLE	TITUS	50F	2	–	GYP. BD.	30	1

NOTES

1. PROVIDE OPPOSED BLADE DAMPER.
2. REFER TO PLAN FOR SIZE.

VARIABLE AIR VOLUME BOX SCHEDULE

TAG	MFG	MODEL	INLET SIZE (IN)	OUTLET SIZE (IN)	DESIGN FLOWS		MINIMUM PRESSURE (IN WG)	REHEAT COIL				CONTROL VALVE		REMARKS
					MAXIMUM (CFM)	MINIMUM (CFM)		MBH	ROWS	GPM	FT. WATER	SIZE	CV	
VAV 1	TITUS	PESV30	10"ø	14x12.5"	1000	300	0.19"	–	–	–	–	–	–	1 2 3
VAV 2	TITUS	PESV30	8"ø	12x10	550	175	0.15"	–	–	–	–	–	–	1 2 3
VAV 3	TITUS	PESV30	12"ø	16x15	1200	600	0.38"	29.3	2	2.0	0.84	1/2	1.9	1 3
VAV 4	TITUS	PESV30	10"ø	14x12.5	750	250	0.31"	19.9	2	2.0	0.64	1/2	1.9	1 3
VAV (E)2	(E)	–	(E)14"ø	(E)	2050	700	(E)0.50"	(E)	(E)	(E)	(E)	(E)	(E)	4

NOTES

1. PROVIDE VAV TERMINAL WITH 1/2" THICK ACOUSTICAL LINING.
2. COOLING ONLY VAV BOX.
3. PROVIDE FULL SIZE SHEET METAL BOX OUTLET WITH 1" THICK ACOUSTICAL DUCT LINING. MINIMUM 5'-0" STRAIGHT DUCT PLUS 90 DEGREE ELBOW (WHERE APPLICABLE).
4. REBALANCE EXISTING VAV BOX CFM SETTINGS TO NEW CFM AS SCHEDULED.

PROJECT RECORD DRAWINGS
6/16/2011
CONTRACTOR: THE ENERGY STORE

REVISION	DESCRIPTION	INITIAL	DATE

ISSUED FOR PROGRESS REVIEW	05-20-09
ISSUED FOR PLAN CHECK - DSA	07-01-09
ISSUED FOR PERMIT	
ISSUED FOR BID	11-18-09
ISSUED FOR CONSTRUCTION	

SEAL:

CONSULTANT:

INTERACTIVE RESOURCES
ARCHITECTURE • PLANNING • ENGINEERING
117 PARK PLACE
POINT RICHMOND
CALIFORNIA 94801
(510) 236-7435
(FAX) 232-5325
http//www.intres.com

PROJECT:

APPLIED ARTS REMODEL

CONTRA COSTA COLLEGE
2600 MISSION BELL DR.
SAN PABLO, CA.

CONTRA COSTA COMMUNITY COLLEGE DISTRICT

SJ ENGINEERS
300 Frank H. Ogawa Plaza
Suite 308
Oakland, CA 94612
Tel: (510) 832-1505
Fax: (510) 832-1507
Job No: 209-0204

SHEET TITLE:

SCHEDULES MECHANICAL

PROJ. NO.	209-0204
PREPARATION AND REVIEW	
DRAWN BY	BD
DESIGNER	AB
PROJ. MGR.	NHJ
PEER REVIEW	

SHEET NUMBER:

M0.2

NUMBER: OF:

© \\jones\Mike Mahoney\Desktop\Contra Costa Fine Arts Remodel - CAD Work 5-11\CAD files\DSA BACK CHECK\M0.2.dwg, 6/17/2011 11:59 AM, Mike Mahoney

SHEET NOTES:

1. EXISTING INDUCTION BOX ABOVE CEILING TO REMAIN.
2. EXISTING INDUCTION BOX ABOVE CEILING TO REMAIN. NOT IN CONTRACT (N.I.C.) VERIFY EXACT LOCATION.
3. EXISTING DX FAN-COIL UNIT ABOVE CEILING TO REMAIN.
4. EXISTING AIR COOLED CONDENSING UNIT/HEAT PUMP UNIT TO REMIAN.
5. EXISTING DUCT RISER TO REMAIN. FIELD VERIFY EXACT LOCATIONS.
6. REMOVE AND DISPOSE OF EXISTING SUPPLY AIR DISCHARGE DUCTWORK FROM EXISTING INDUCTION BOX, INCLUDING DUCT INSULATIONS, HANGERS & SUPPORTS.
7. REMOVE AND DISPOSE OF EXISTING SUPPLY AND RETURN AIR DUCTWORK FROM EXISTING DX FAN-COIL UNIT, INCLUDING DUCT INSULATIONS, HANGERS AND SUPPORTS.
8. REMOVE AND DISPOSE OF EXISTING CEILING DIFFUSER, GRILLE, OR REGISTER.
9. REMOVE AND DISPOSE OF EXISTING WALL MOUNTED PNEUMATIC THERMOSTAT.
10. REMOVE EXISTING WALL MOUNTED LOW-VOLTAGE THERMOSTAT. STORE FOR RE-INSTALLATION AND RELOCATION.
11. EXISTING CEILING DIFFUSER, GRILLE OR REGISTER TO REMAIN.
12. EXISTING DUCTWORK TO REMAIN. FIELD VERIFY EXACT LOCATIONS.
13. EXISTING HEATING HOT WATER PIPING TO REMAIN.

REMOVALL ALL CHALK BOARDS AND PROJECTION SCREEN, TACK BOARD, TYP.

REMOVE (E) DOOR & SIDE LITE FRAME

SAWCUT & REMOVE (E) PARTIAL WALLS

REMOVE (E) DOOR & SIDE LITE FRAME

REMOVE (E) DRINKING FOUNTAIN & RELOCATE (E) STEEL PIPES

REMOVE (E) DOOR & FRAME

REMOVE (E) CARPET, WALL AND DOOR

REMOVE (E) CONC. SLAB, TYP.

REMOVE (E) WINGWALLS, CONC. CURB, CERAMIC WALL/FLOOR TILE, LAVATORIES, COUNTER, TOILET PARTITIONS AND FIXTURES

SAWCUT AND REMOVE PARTIAL (E) WALL

REMOVE (E) DRINKING FOUNTAIN.

REMOVE & RELOCATE (E) STEEL PIPE WING WALL

REMOVE (E) WHITE BOARDS AND RELOCATE

REMOVE (E) WALL AND DOOR (E)

REMOVE (E) WINGWALL, CONC. CURB, CERAMIC WALL/FLOOR TILE, LAVATORIES, COUNTER, TOILET PARTITION AND FIXTURES

REMOVE (E) CONC. SLAB, TYP.

REMOVE (E) WALLS, WINDOWS AND DOORS, TYP.

REMOVE (E) SLIDING CHALK BOARD

REMOVE (E) GLASS WALLS AND DOORS

REMOVE (E) CASEWORK, TYP.

(E) CABINET TO REMAIN

REMOVE (E) WINDOW, DOORS AND WALL

REMOVE (E) LOCKERS AND RELOCATE AS DIRECTED BY OWNER

20 FIRST FLOOR - DEMO PLAN - MECHANICAL
SCALE: 1/8"=1'-0"

REFERENCE NORTH

PROJECT RECORD DRAWINGS
6/16/2011
CONTRACTOR: THE ENERGY STORE

REVISION	DESCRIPTION	INITIAL	DATE

ISSUED FOR PROGRESS REVIEW	05-20-09
ISSUED FOR PLAN CHECK - DSA	07-01-09
ISSUED FOR PERMIT	
ISSUED FOR BID	11-18-09
ISSUED FOR CONSTRUCTION	

SEAL:

CONSULTANT:

INTERACTIVE RESOURCES
ARCHITECTURE • PLANNING • ENGINEERING
117 PARK PLACE
POINT RICHMOND
CALIFORNIA 94801
(510) 236-7435
(FAX) 232-5325
http://www.intres.com

PROJECT:

APPLIED ARTS REMODEL

CONTRA COSTA COLLEGE
2600 MISSION BELL DR.
SAN PABLO, CA.

CONTRA COSTA COMMUNITY COLLEGE DISTRICT

SJ ENGINEERS
300 Frank H. Ogawa Plaza
Suite 308
Oakland, CA 94612
Tel: (510) 832-1505
Fax: (510) 832-1507
Job No: 209-0204

SHEET TITLE:

FIRST FLOOR DEMO PLAN MECHANICAL

PROJ. NO.	209-0204
PREPARATION AND REVIEW	
DRAWN BY	BD
DESIGNER	AB
PROJ. MGR.	NHJ
PEER REVIEW	

SHEET NUMBER:

M1.1

NUMBER: OF:

© Interactive Resources

SHEET NOTES:

1. EXISTING VAV BOX ABOVE CEILING TO REMAIN.
2. EXISTING DUCT MOUNTED COOLING & HEATING COILS ABOVE CEILING TO REMAIN, INCLUDING EXISTING PIPING, VALVES, CONTROLS AND APPURTENANCES.
3. EXISTING DUCT MOUNTED HEATING COIL ABOVE CEILING TO REMAIN, INCLUDING EXISTING PIPING, VALVES, CONTROLS AND APPURTENANCES.
4. EXISTING CHILLED WATER AND HEATING HOT WATER PIPING ABOVE CEILING TO RAMAIN.
5. EXISTING VAV BOX (N.I.C.) TO REMAIN.
6. EXISTING DUCT TO REMAIN. VERIFY EXACT LOCATION IN FIELD.
7. EXISTING MAIN SUPPLY AIR DUCT FROM AIR HANDLING UNIT TO REMAIN. VERIFY EXACT LOCATION IN FIELD.
8. EXISTING MAIN RETURN AIR DUCT FROM AIR HANDLING UNIT TO REMAIN. VERIFY EXACT LOCATION IN FIELD.
9. EXISTING CEILING AIR OUTLET TO REMAIN. VERIFY EXACT LOCATION IN FIELD.
10. CUT EXISTING BRANCH MAIN RETURN AIR DUCT. TEMPORARILY CAP FOR FUTURE EXTENSION.
11. REMOVE AND DISPOSE OF EXISTING DISCHARGE DUCTWORK FROM EXISTING VAV BOX, INCLUDING DUCT INSULATION, HANGERS, AND SUPPORTS.
12. REMOVE AND DISPOSE OF EXISTING RETURN AIR DUCTWORK ABOVE CEILING, INCLUDING DUCT INSULATION, HANGERS, AND SUPPORTS.
13. REMOVE AND DISPOSE OF EXISTING CEILING SUPPLY DIFFUSER.
14. REMOVE AND DISPOSE OF EXISTING CEILING RETURN GRILLED.
15. REMOVE EXISTING PNEUMATIC WALL THERMOSTAT. STORE FOR RE-INSTALLATION AND RELOCATION.

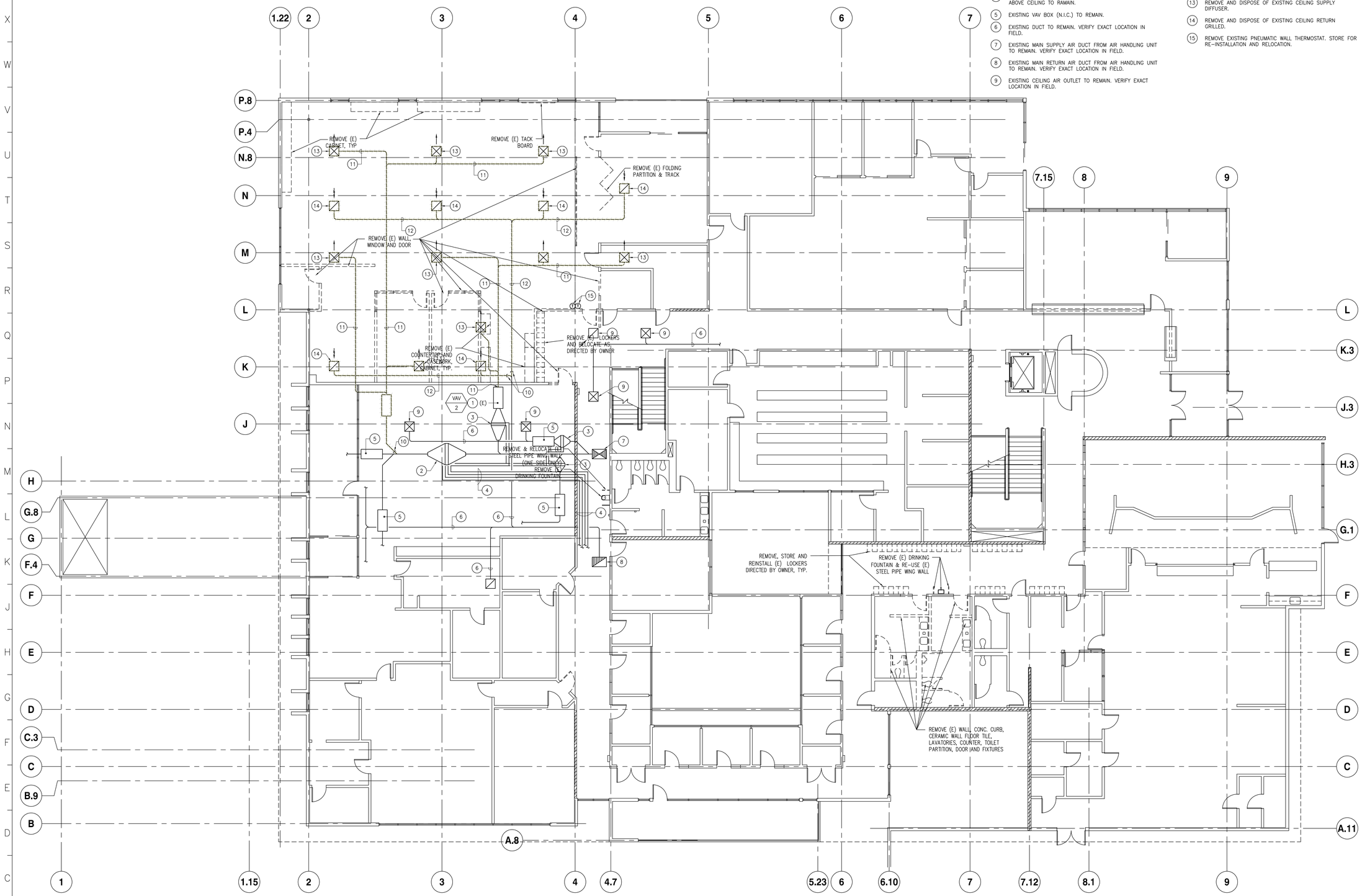

20 SECOND FLOOR - DEMO PLAN - MECHANICAL
SCALE: 1/8"=1'-0"

REFERENCE NORTH

PROJECT RECORD DRAWINGS
6/16/2011
CONTRACTOR: THE ENERGY STORE

REVISION	DESCRIPTION	INITIAL	DATE

ISSUED FOR PROGRESS REVIEW	05-20-09
ISSUED FOR PLAN CHECK - DSA	07-01-09
ISSUED FOR PERMIT	
ISSUED FOR BID	11-18-09
ISSUED FOR CONSTRUCTION	

SEAL:

CONSULTANT:

INTERACTIVE RESOURCES
ARCHITECTURE • PLANNING • ENGINEERING
117 PARK PLACE
POINT RICHMOND
CALIFORNIA 94801
(510) 236-7435
(FAX) 232-5325
http//www.intres.com

PROJECT:

APPLIED ARTS REMODEL

CONTRA COSTA COLLEGE
2600 MISSION BELL DR.
SAN PABLO, CA.

CONTRA COSTA COMMUNITY COLLEGE DISTRICT

SJ ENGINEERS
300 Frank H. Ogawa Plaza
Suite 308
Oakland, CA 94612
Tel: (510) 832-1505
Fax: (510) 832-1507
Job No: 209-0204

SHEET TITLE:

SECOND FLOOR DEMO PLAN MECHANICAL

PROJ. NO.	209-0204
PREPARATION AND REVIEW	
DRAWN BY	BD
DESIGNER	AB
PROJ. MGR.	NHJ
PEER REVIEW	

SHEET NUMBER:

M1.2

NUMBER: OF:

SHEET NOTES:

1. EXISTING INDUCTION BOX TO REMAIN. AREA SERVED IS N.I.C.
2. EXISTING DUCT RISER TO REMAIN. FIELD VERIFY EXACT LOCATION IN FIELD.
3. EXISTING AIR COOLED CONDENSING UNIT/HEAT PUMP TO REMAIN. VERIFY EXACT LOCATION OF REFRIGERANT PIPING & ROOTING IN FIELD.
4. EXISTING INDUCTION BOX TO REMAIN: REBALENCE AIR FLOW TO 900 CFM.
5. EXISTING INDUCTION BOX TO REMAIN: REBALANCE AIR FLOW TO 900 CFM.
6. EXISTING INDUCTION BOX TO REMAIN: REBALANCE AIR FLOW TO 1350 CFM.
7. EXISTING INDUCTION BOX TO REMAIN: REBALANCE AIR FLOW TO 800 CFM.
8. CONNECT (N) SUPPLY DUCT TO (E) INDUCTION BOX OUTLET. PROVIDE SHEET METAL TRANSITION AS REQUIRED.
9. EXISTING DX FAN COIL UNIT TO REMAIN: REFER TO SPLIT-SYTEM AC SCHEDULE ON SHEET M0.2 FOR ADDITIONAL INFORMATION.
10. CONNECT (N) SUPPLY DUCT TO (E) SUPPLY PLENUM. PATCH & SEAL (E) PLENUM AS REQUIRED.
11. CONNECT (N) RETURN DUCT TO (E) RETURN PLENUM. PATCH & SEAL (E) PLENUM AS REQUIRED.
12. REINSTALL (E) PNEUMATIC ROOM THERMOSTAT AND CONNECT TO (E) INDUCTION BOX. MOUNT AT 48" AFF.
13. REINSTALL (E) LOW VOLTAGE ROOM THERMOSTAT AND CONNECT TO (E) RELOCATED SPLIT-SYSTEM AC. MOUNT AT 48" AFF.

REVISION	DESCRIPTION	INITIAL	DATE

ISSUED FOR PROGRESS REVIEW	05-20-09
ISSUED FOR PLAN CHECK - DSA	07-01-09
ISSUED FOR PERMIT	
ISSUED FOR BID	11-18-09
ISSUED FOR CONSTRUCTION	

SEAL:

CONSULTANT:

INTERACTIVE RESOURCES
ARCHITECTURE • PLANNING • ENGINEERING
117 PARK PLACE
POINT RICHMOND
CALIFORNIA 94801
(510) 236-7435
(FAX) 232-5325
http://www.intres.com

PROJECT:

APPLIED ARTS REMODEL

CONTRA COSTA COLLEGE
2600 MISSION BELL DR.
SAN PABLO, CA.

CONTRA COSTA COMMUNITY COLLEGE DISTRICT

SJ ENGINEERS
300 Frank H. Ogawa Plaza
Suite 308
Oakland, CA 94612
Tel: (510) 832-1505
Fax: (510) 832-1507
Job No: 209-0204

SHEET TITLE:

FIRST FLOOR PLAN MECHANICAL

PROJ. NO.	209-0204
	PREPARATION AND REVIEW
DRAWN BY	
DESIGNER	AB
PROJ. MGR.	NHJ
PEER REVIEW	

SHEET NUMBER:

M2.1

NUMBER: OF:

20 FIRST FLOOR PLAN - MECHANICAL
SCALE: 1/8"=1'-0"

REFERENCE NORTH

PROJECT RECORD DRAWINGS
6/16/2011
CONTRACTOR: THE ENERGY STORE

© \\Users\Mike Mahoney\Desktop\Contra Costa Fine Arts Remodel - CAD Work 5-11\CAD files\DSA BACK CHECK\M2.1.dwg 6/17/2011 12:05 PM Mike Mahoney

SHEET NOTES:

1. EXISTING VAV BOX TO REMAIN. AREA SERVED IS N.I.C.
2. EXISTING DUCT RISER TO ROOFTOP EQUIPMENT TO REMAIN. FIELD VERIFY EXACT LOCATION IN FIELD.
3. EXISTING VAV BOX TO REMAIN: REFER TO VAV BOX SCHEDULE ON SHEET M0.2 FOR REBALANCE CFM SET POINTS.
4. INSTALL (N) VAV BOX WITH HOT WATER REHEAT COIL. REFER TO VAV BOX SCHEDULE ON SHEET M0.2.
5. CONNECT (N) SUPPLY DUCT TO (E) VAV BOX OUTLET. PROVIDE SHEET METAL TRANSITION AS REQUIRED.
6. CONNECT (N) BRANCH RETURN DUCT TO (E) RETURN MAIN. PROVIDE SHEET METAL TRANSITION AS REQUIRED. VERIFY EXACT LOCATION IN FIELD.
7. CONNECT (N) 1/2"HHWS & 1/2"HHWR PIPING TO EXISTING 3/4"HHWS & 3/4"HHWR. VERIFY EXACT LOCATION IN FIELD.
8. INSTALL DUCTLESS SPLIT FAN COIL UNIT ON WALL. CONNECT 1/2"RL, 1/2"RS AND 3/4"CD. FOR CD PIPING SEE PLUMBI. DWGS.
9. RUN 1/4"RL & 1/2" RL DOWN TIGHT TO WALL AND CONNECT TO FC-1.
10. REFRIGERANT TUBING RUN ABOVE FINISHED CEILING.
11. RUN 1/4"RL & 1/2"RS DOWN TIGHT TO EXTERIOR WALL. OFFSET AND CONNECT TO CONDENSING UNIT.
12. INSTALL DUCTLESS SPLIT SYSTEM CONDENSING UNIT ON EXTERIOR BALCONY. CONNECT 1/4"RL AND 1/2"RS. FOR TYPICAL PIPING SEE DETAIL 1/M6.1.

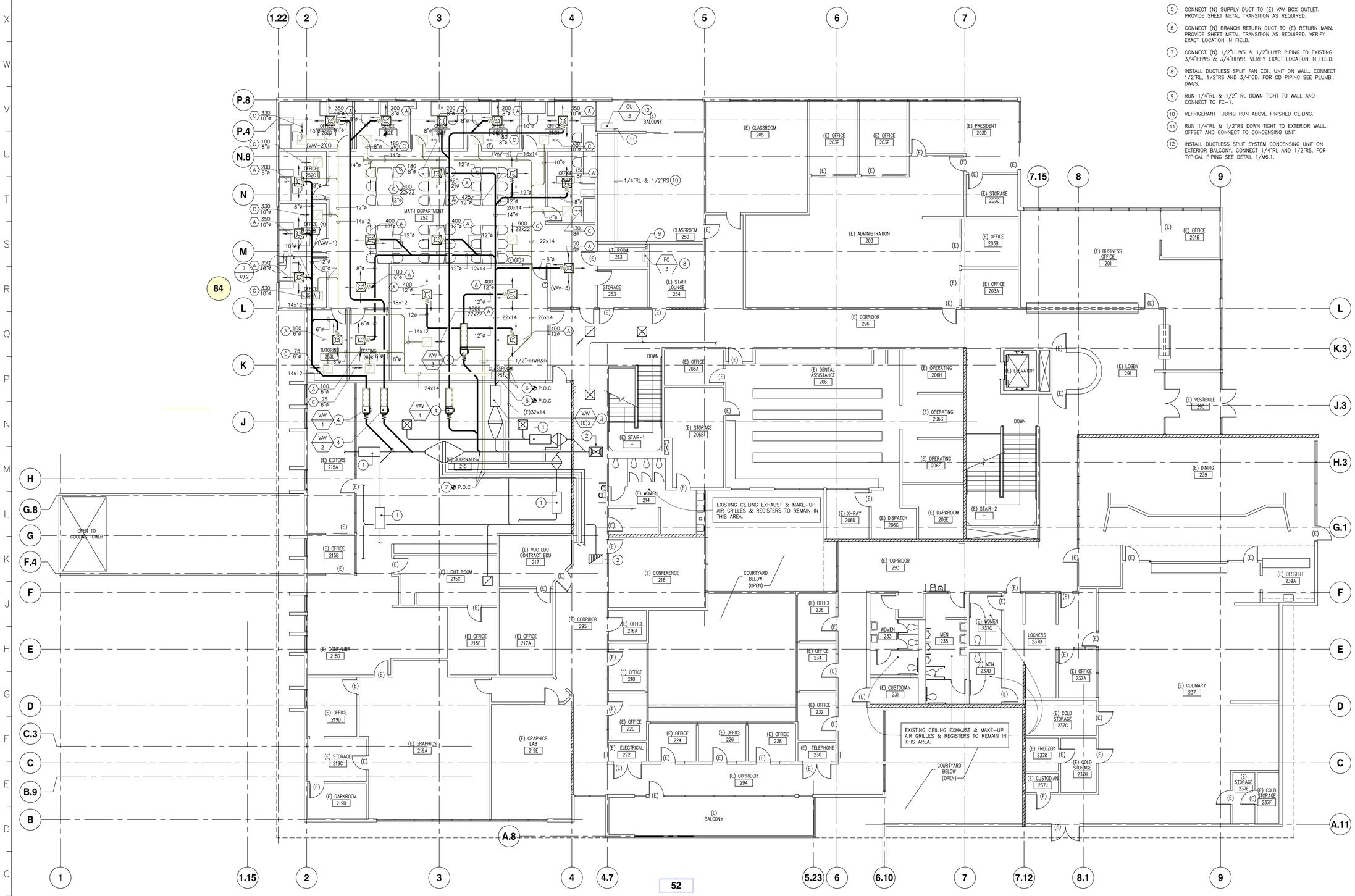

20 SECOND FLOOR PLAN - MECHANICAL
SCALE: 1/8"=1'-0"

REFERENCE NORTH

PROJECT RECORD DRAWINGS
6/16/2011
CONTRACTOR: THE ENERGY STORE

REVISION	DESCRIPTION	INITIAL	DATE

ISSUED FOR PROGRESS REVIEW	05-20-09
ISSUED FOR PLAN CHECK - DSA	07-01-09
ISSUED FOR PERMIT	
ISSUED FOR BID	11-18-09
ISSUED FOR CONSTRUCTION	

SEAL:

CONSULTANT:

INTERACTIVE RESOURCES
ARCHITECTURE • PLANNING • ENGINEERING
117 PARK PLACE
POINT RICHMOND
CALIFORNIA 94801
(510) 236-7435
(FAX) 232-5325
http//www.intres.com

PROJECT:

APPLIED ARTS REMODEL

CONTRA COSTA COLLEGE
2600 MISSION BELL DR.
SAN PABLO, CA.

CONTRA COSTA COMMUNITY COLLEGE DISTRICT

SJ ENGINEERS
300 Frank H. Ogawa Plaza
Suite 308
Oakland, CA 94612
Tel: (510) 832-1505
Fax: (510) 832-1507
Job No: 209-0204

SHEET TITLE:

SECOND FLOOR PLAN MECHANICAL

PROJ. NO.	209-0204
PREPARATION AND REVIEW	
DRAWN BY	BD
DESIGNER	AB
PROJ. MGR.	NHJ
PEER REVIEW	

SHEET NUMBER:

M2.2

NUMBER: OF:

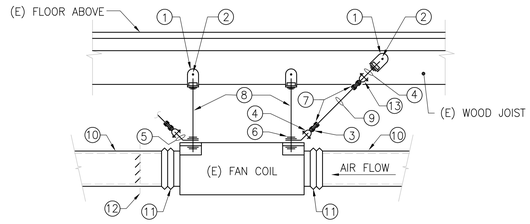

DETAIL NOTES:

1. GRINNEL FIG. NO. 202 SIDE BEAM BRACKET.
2. 3/4"ø BOLT THROUGH JOIST WITH WASHERS AND LOCKING NUTS.
3. HEAVY WIRE ROPE THIMBLE, TYPICAL.
4. 1/2" ROUND PIN CHAIN SHACKLE WITH 5/8"ø PIN, TYPICAL.
5. 3"x1/4" THICK PLATE BEND, TYPICAL.
6. 1/2"ø NUT WITH LOCK WASHER.
7. U-BOLT CLIPS, TYPICAL.
8. 1/2"ø HANGER ROD, TYPICAL OF 4.
9. 5/16"ø AIRCRAFT CABLE. TENSION CABLE ONLY ENOUGH TO REMOVE SLACK, TYPICAL. PROVIDE ASSEMBLY 2 PLACES DIAGONALLY, 135° FROM FAN'S VERTICAL SIDES.
10. EXHAUST DUCT.
11. FLEXIBLE DUCT CONNECTION.
12. BACKDRAFT DAMPER.
13. 1/2"ø EYE BOLT WITH NUT AND LOCKWASHER BOTH SIDES OF BEAM BRACKET.

3 M6.1 EXISTING FAN COIL UNIT MOUNTING

NOT TO SCALE

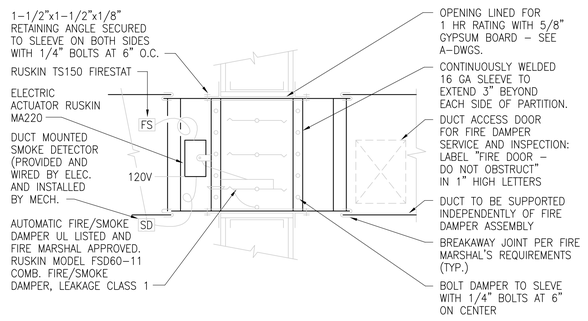

NOTE:

RUSKIN MODEL FSD60 MEETS NFPA90A AND NFPA92A REQUIREMENTS FOR FIRE SMOKE DAMPERS AND CALIFORNIA STATE FIRE MARSHAL CLASSIFICATION LISTING NO 3225-245:110.

SMOKE/FIRE DAMPER DETAIL IS FOR REFERENCE ONLY, SMOKE/FIRE AND FIRE DAMPERS SHALL BE STATE FIRE MARSHAL APPROVED AND INSTALLED STRICTLY PER MANUFACTURER'S PRINTED INSTRUCTIONS. MANUFACTURER'S INSTALLATION INSTRUCTIONS SHALL BE MADE AVAILABLE TO THE INSPECTING AUTHORITHIOES.

2 M6.1 COMBINATION FIRE/SMOKE DAMPER

NOT TO SCALE

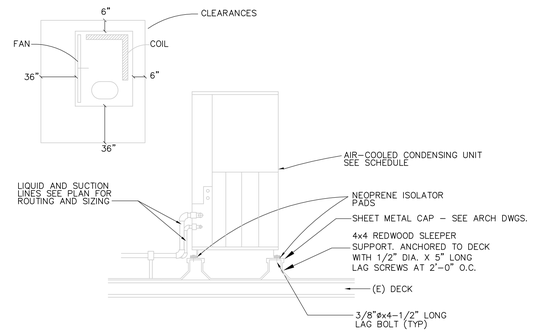

NOTE:

1. ALL ROOFING, ROOF FLASHING AND COUNTER FLASHING SHALL BE INSTALLED IN ACCORDANCE WITH THE NATIONAL ROOFING CONTRACTORS ASSOCIATION GUIDLINES AND ROOFING MANUFACTURERS' INSTALLATION REQUIREMENTS.

1 M6.1 CONDENSING UNIT/HEAT PUMP SUPPORT

NOT TO SCALE

PROJECT RECORD DRAWINGS
6/16/2011
CONTRACTOR: THE ENERGY STORE

REVISION	DESCRIPTION	INITIAL	DATE

ISSUED FOR PROGRESS REVIEW	05-20-09
ISSUED FOR PLAN CHECK - DSA	07-01-09
ISSUED FOR PERMIT	
ISSUED FOR BID	11-18-09
ISSUED FOR CONSTRUCTION	

SEAL:

CONSULTANT:

INTERACTIVE RESOURCES
ARCHITECTURE • PLANNING • ENGINEERING
117 PARK PLACE
POINT RICHMOND
CALIFORNIA 94801
(510) 236-7435
(FAX) 232-5325
http//www.intres.com

PROJECT:

APPLIED ARTS REMODEL

CONTRA COSTA COLLEGE
2600 MISSION BELL DR.
SAN PABLO, CA.

CONTRA COSTA COMMUNITY COLLEGE DISTRICT

SJ ENGINEERS
300 Frank H. Ogawa Plaza
Suite 308
Oakland, CA 94612
Tel: (510) 832-1505
Fax: (510) 832-1507
Job No: 209-0204

SHEET TITLE:

MECHANICAL DETAILS

PROJ. NO.	209-0204
PREPARATION AND REVIEW	
DRAWN BY	BD
DESIGNER	AB
PROJ. MGR.	NHJ
PEER REVIEW	

SHEET NUMBER:

M6.1

NUMBER: OF:

C:\Users\Mike Maloney\Desktop\Contra Costa Fine Arts Remodel - CAD Work 5-11\CAD files\DGN CHECK\M6.1.dwg, 6/17/2011 12:07 PM, Mike Maloney

GENERAL SCOPE OF WORK BLDG. –"A"

THE FOLLOWING IS A GENERAL DESCRIPTION OF THE PLUMBING SCOPE OF WORK TO BE PERFORMED IN THE EXISTING MAIN BUILDING "A". THE SCOPE OF WORK FOR THE EXISTING PLUMBING AND PIPING SYSTEM SERVING THE EXISTING MAIN BUILDING "A" SHALL INCLUDE, BUT NOT NECESSARILY BE LIMITED TO THE FOLLOWING:

1. THE EXISTING KINDERGARTEN CLASSROOM TOILET FIXTURES SHALL BE REMOVED AND REPLACED WITH NEW PLUMBING FIXTURES, TO INCLUDE NEW PRIMARY WATER CLOSET, FLUSHOMETER VALVE, LAVATORY, AND LAVATORY FAUCET.
2. THE EXISTING KITCHEN TOILET ROOM FIXTURES SHALL BE REMOVED AND REPLACED WITH NEW PLUMBING FIXTURES TO INCLUDE NEW ADA COMPLIANT WATER CLOSET, ADA COMPLIANT LAVATORY, AND ADA COMPLIANT LAVATORY FAUCET. MOUNTING HEIGHTS OF NEW FIXTURES SHAL BE IN ACCORDANCE WITH ADA REQUIREMENTS.
3. THE EXISTING FAUCET SERVING THE MOP SINK AT THE CUSTODIAN ROOM SHALL BE REMOVED AND REPLACED WITH A NEW FAUCET ASSEMBLY COMPLETE WITH I NTEGRAL VACUUM BREAKER.
4. INSTALL SEISMIC STRAPS ON DOMESTIC WATER HEATERS LOCATED IN THE BOILER ROOM AND CUSTODIAN ROOM. sEISMIC STRAPS SHALL BE ANCHORED TO THE EXISTING STRUCTURE.
5. INSTALL PIPE INSULATION ON THE DOMESTIC HOT WATER SUPPLY AND RECIRCULATIONS PIPING LOCATED IN THE BOILER ROOM AND CUSTODIAN ROOM. INSULATION SHALL COMPLY WITH CEC TITLE–24 STANDARDS.

THE INSTALLATION SHALL BE PERFORMED IN STRICT ACCORDANCE WITH THE EQUIPMENT MANUFACTURER'S RECOMMENDATIONS. PROVIDE ALL FITTINGS, TRANSITIONS, SUPPLIES, VALVES, AND OTHER DEVICES REQUIRED FOR A COMPLETE AND OPERATIONAL INSTALLATION.

SCHOOL EQUIPMENT ANCHORAGE NOTES

A. ALL MECHANICAL AND ELECTRICAL EQUIPMENT SHALL BE BRACED OR ANCHORED TO RESIST A HORIZONTAL FORCE ACTING IN ANY DIRECTION USING THE FOLLOWING CRITERIA:

B. THE TOTAL DESIGN LATERAL SEISMIC FORCE SHALL BE DETERMINED FROM SECTION 1613A, CALIFORNIA BUILDING CODE (CBC) 2007. FORCES SHALL BE APPLIED IN THE HORIZONTAL DIRECTIONS, WHICH RESULT IN THE MOST CRITICAL LOADINGS FOR DESIGN.

C. THE VALUE OF A_p (COMPONENT AMPLIFICATION FACTOR) AND R_p (COMPONENT RESPONSE MODIFICATION FACTOR) OF SECTION 1613A SHALL BE SELECTED FROM ASCE 7 CHAPTER 13. THE VALUE OF I_p (SEISMIC IMPORTANCE FACTOR) AND C_a (SEISMIC COEFFICIENT) SHALL BE SELECTED FROM ASCE 7 CHAPTER 13, 2007 CBC RESPECTIVELY.

D. WHERE ANCHORAGE DETAILS ARE NOT SHOWN ON THE DRAWINGS, THE FIELD INSTALLATION SHALL BE SUBJECT TO THE APPROVAL OF THE MECHANICAL/ELECTRICAL ENGINEER AND THE FIELD REPRESENTATIVE OF THE DIVISION OF THE STATE ARCHITECT (DSA).

PROJECT RECORD DRAWINGS
6/16/2011
CONTRACTOR: BIG BEARS PLUMBING

ABBREVIATIONS

ABBREV	DESCRIPTION
∠	ANGLE
@	AT
℄	CENTERLINE
ø	DIAMETER, ROUND OR PHASE
ABV	ABOVE
AD	ACCESS DOOR OR AREA DRAIN
ADA	AMERICANS WITH DISABILITIES ACT
AFF	ABOVE FINISHED FLOOR
AG	ABOVE GRADE
AMPS	AMPERES
AP	ACCESS PANEL
ARCH	ARCHITECT OR ARCHITECTURAL
ASSY	ASSEMBLY
ASR	AUTOMATIC SPRINKLER RISER
AUTO	AUTOMATIC
AVG	AVERAGE
BEL	BELOW
BF	BELOW FLOOR
BFF	BELOW FINISHED FLOOR
BG	BELOW GRADE
BOF	BOTTOM OF FOOTING
BOS	BOTTOM OF STEEL
BHP	BRAKE HORSEPOWER
BLDG	BUILDING
BTU	BRITISH THERMAL UNIT
BTUH	BRITISH THERMAL UNIT PER HOUR
CALCS	CALCULATIONS
CAP	CAPACITY
CAT	CATEGORY
CB	CATCH BASIN
CFF	CAPPED FOR FUTURE
CFH	CUBIC FEET PER HOUR
CFM	CUBIC FEET PER MINUTE
CFS	CUBIC FEET PER SECOND
CI	CAST IRON
CLG	CEILING
COL	COLUMN
CONC	CONCRETE
CONN	CONNECT OR CONNECTION
CONT	CONTINUATION
CP	CIRCULATION PUMP
CTE	CONNECT TO EXISTING
DFU	DRAINAGE FIXTURE UNIT
DIA	DIAMETER
DIM	DIMENSION
DN	DOWN
DS	DOWNSPOUT
DTL	DETAIL
DWG	DRAWING
DWV	DRAINAGE WASTE AND VENT
(E)	EXISTING
EA	EACH
EFF%	EFFICIENCY (PERCENTAGE)
ELEC	ELECTRIC OR ELECTRICAL
EL	ELEVATION
ELEV	ELEVATOR
EMGY	EMERGENCY
ENGR	ENGINEER
EQ	EQUAL
EQPT	EQUIPMENT
ET	EXPANSION TANK
EWH	ELECTRIC WATER HEATER
EWT	ENTERING WATER TEMPERATURE
(F)	FUTURE
°F	DEGREE FAHRENHEIT
FC	FLEXIBLE CONNECTION
FDC	FIRE DEPARTMENT CONNECTION
FF	FINISHED FLOOR
FFE	FINISHED FLOOR ELEVATION
FH	FIRE HYDRANT
FHC	FIRE HOSE CABINET
FHR	FIRE HOSE RACK
FIN	FINISHED
FLA	FULL LOAD AMPS
FLR	FLOOR
FP	FIRE PROTECTION
FPM	FEET PER MINUTE
FPS	FEET PER SECOND
FT	FEET
FTG	FOOTING
FU	FIXTURE UNIT
GA	GAUGE
GAL	GALLONS
GC	GENERAL CONTRACTOR
GEN	GENERAL
GND	GROUND
GPF	GALLONS PER FLUSH
GPH	GALLONS PER HOUR
GPM	GALLONS PER MINUTE
GRD	GRADE
GWH	GAS–FIRED WATER HEATER
HD	HEAD OR HUB DRAIN
HORIZ	HORIZONTAL
HP	HORSEPOWER
HR	HOUR
HT	HEIGHT OR HEAT TRACE
HTR	HEATER
HV	HOSE VALVE
HVAC	HEATING, VENTILATING & AIR CONDITIONING
HX	HEAT EXCHANGER
HZ	HERTZ
ID	INSIDE DIAMETER OR INSIDE DIMENSION
IE	INVERT ELEVATION
IN	INCH
JS	JANITOR SINK
KW	KILOWATTS

ABBREV	DESCRIPTION
L	LAVATORY
LBS	POUNDS
LF	LINEAR FEET
LG	LENGTH
LVL	LEVEL
LWT	LEAVING WATER TEMPERATURE
MAX	MAXIMUM
MBH	THOUSAND BTU PER HOUR
MECH	MECHANICAL
MFG	MANUFACTURING
MFR	MANUFACTURER
MH	MANHOLE
MIN	MINIMUM
MISC	MISCELLANEOUS
MTD	MOUNTED
(N)	NEW
NA	NOT APPLICABLE
NC	NORMALLY CLOSED
NFA	NET FREE AREA
NIC	NOT IN CONTRACT
NO	NORMALLY OPEN OR NUMBER
NPT	NATIONAL PIPE THREAD
NTS	NOT TO SCALE
OC	ON CENTER
OD	OUTSIDE DIAMETER OR OUTSIDE DIMENSION
OFD	OVERFLOW STORM DRAIN
OPER	OPERATING
ORD	OVERFLOW ROOF DRAIN
P	PUMP
PD	PLANTER DRAIN OR PRESSURE DROP
PH	PHASE
PIV	POST INDICATING VALVE
PKG	PACKAGE
PLBG	PLUMBING
PNL	PANEL
PSI	POUNDS PER SQUARE INCH
PSIG	POUNDS PER SQUARE INCH GAUGE
QTY	QUANTITY
(R)	RELOCATED
REF	REFERENCE
REQD	REQUIRED
RM	ROOM
RPM	REVOLUTIONS PER MINUTE
SCHED	SCHEDULE
SECT	SECTION
SF	SQUARE FEET
SHT	SHEET
SIM	SIMILAR
SJ	SEISMIC JOINT
SK	SINK
SL	SLOPE
SP	SUMP PUMP OR STATIC PRESSURE
SPECS	SPECIFICATIONS
SQ	SQUARE
SSK	SERVICE SINK
SST	STAINLESS STEEL
STD	STANDARD OR SOAP TANK DISPENSER
STRUCT	STRUCTURAL
SYST	SYSTEM
TDH	TOTAL DYNAMIC HEAD
TEMP	TEMPERATURE
TOF	TOP OF FOOTING
TOS	TOP OF STEEL
TP	TRAP PRIMER OR TOTAL PRESSURE
TS	TAMPER SWITCH
TYP	TYPICAL
UG	UNDERGROUND
UON	UNLESS OTHERWISE NOTED
UR	URINAL
V	SANITARY VENT OR VOLTS
VB	VACUUM BREAKER
VEL	VELOCITY
VIF	VERIFY IN FIELD
VOL	VOLUME
VTR	VENT THROUGH ROOF
W	WASTE OR WATTS
WC	WATER CLOSET
WH	WATER HEATER OR WALL HYDRANT
WM	WATER METER
WT	WEIGHT
WxH	WIDTH x HEIGHT
WxHxD	WIDTH x HEIGHT x DEPTH
WxL	WIDTH x LENGTH
ZN	ZONE

PLUMBING LEGEND

SYMBOL	ABBREV	DESCRIPTION
		DETAIL NUMBER / DRAWING NUMBER – DETAIL TAG
		EQUIPMENT TYPE / EQUIPMENT NUMBER – EQUIPMENT TAG
		SHEET NOTE TAG
CTE		THICK LINE REPRESENTS NEW WORK AND THIN LINE REPRESENTS EXISTING WORK
	POC	POINT OF CONNECTION
(E)	(E)	EXISTING LINE
		EXISTING WORK TO BE REMOVED
		PIPE RISE/PIPE UP
		PIPE DROP/PIPE DOWN
		BRANCH TOP PIPE CONNECTION
		BRANCH BOTTOM PIPE CONNECTION
		PIPE CAPPED
		FLOW IN DIRECTION OF ARROW
		PIPE SLOPE DOWN IN DIRECTION OF ARROW
		LINE CONTINUED
		PIPING OF TYPE INDICATED BELOW FLOOR OR BELOW GRADE
		PIPING OF TYPE INDICATED ABOVE FLOOR OR ABOVE CEILING
SS	SS	SANITARY SEWER OR WASTE PIPING
	V	SANITARY VENT
SD	SD	STORM DRAIN PIPING
OFD	OFD	OVERFLOW STORM DRAIN PIPING
CD	CD	CONDENSATE DRAIN PIPING
	CW	DOMESTIC COLD WATER PIPING
	HW	DOMESTIC HOT WATER PIPING
	HWR	DOMESTIC HOT WATER RETURN PIPING
G	G	GAS PIPING – LOW PRESSURE
TP	TP	TRAP PRIMER PIPING
F	F	FIRE PROTECTION WATER SUPPLY
SPR	SPR	FIRE SPRINKLER PIPING
WSP	WSP	WET STANDPIPE
D	D	FIRE SPRINKLER DRAIN PIPING
	AD/FD	AREA DRAIN/FLOOR DRAIN
	RD/ORD	ROOF DRAIN/OVERFLOW ROOF DRAIN
	RR	ROOF RECEPTOR
	FS	FLOOR SINK – LESS GRATE
	FS	FLOOR SINK – HALF GRATE
	FS	FLOOR SINK – FULL GRATE
	FCO/GCO	FLOOR CLEANOUT/GRADE CLEANOUT

SYMBOL	ABBREV	DESCRIPTION
	CO/WCO	CLEANOUT/WALL CLEANOUT
	UN	UNION
	FC	FLEXIBLE PIPE CONNECTOR
	PG	PIPE GUIDE
	PA	PIPE ANCHOR
	ST	STRAINER
	ST	STRAINER WITH BLOWDOWN VALVE
	PG	PRESSURE GAUGE
	PG	PRESSURE GAUGE WITH PET COCK
	TH	THERMOMETER
DCVA	DCVA	DOUBLE CHECK VALVE ASSEMBLY
RPBP	RPBP	REDUCED PRESSURE BACKFLOW PREVENTER
BFP	BFP	BACKFLOW PREVENTER
	RV	RELIEF VALVE
	PTRV	PRESSURE AND TEMPERATURE RELIEF VALVE
	NO	NORMALLY OPEN TYPE OF VALVE INDICATED
	NC	NORMALLY CLOSED VALVE OF TYPE INDICATED
	SOV	SHUT–OFF VALVE
		SHUT–OFF VALVE RISER
	AV	ANGLE VALVE
	GV	GATE VALVE
	GLV	GLOBE VALVE
	BV	BALL VALVE
	BFV	BUTTERFLY VALVE
	GC	GAS COCK
	PV	PLUGGED VALVE
	CV	CHECK VALVE
	PRV	PRESSURE REDUCING VALVE
	SV	SOLENOID VALVE
	SGV	SEISMIC GAS SHUT–OFF VALVE
	BLV	BALANCING VALVE
	MV	MIXING VALVE
	FS	FLOW SWITCH
	PS	PRESSURE SWITCH
	AST	AQUASTAT
	WHA	WATER HAMMER ARRESTER
	HB	HOSE BIBB
		PUMP
	FDC	FIRE DEPARTMENT CONNECTION

REVISION	DESCRIPTION	INITIAL	DATE
	ISSUED FOR PROGRESS REVIEW		05–20–09
	ISSUED FOR PLAN CHECK – DSA		07–01–09
	ISSUED FOR PERMIT		
	ISSUED FOR BID		11–18–09
	ISSUED FOR CONSTRUCTION		

SEAL:

CONSULTANT:

INTERACTIVE
R E S O U R C E S
ARCHITECTURE • PLANNING • ENGINEERING
117 PARK PLACE
POINT RICHMOND
CALIFORNIA 94801
(510) 236–7435
(FAX) 232–5325
http//www.intres.com

PROJECT:

APPLIED ARTS REMODEL

CONTRA COSTA COLLEGE
2600 MISSION BELL DR.
SAN PABLO, CA.

CONTRA COSTA COMMUNITY COLLEGE DISTRICT

SJ ENGINEERS
300 Frank H. Ogawa Plaza
Suite 308
Oakland, CA 94612
Tel: (510) 832–1505
Fax: (510) 832–1507
Job No: 209–0204

SHEET TITLE:

LEGEND, ABBREVIATIONS & GENERAL NOTES PLUMBING

PROJ. NO. 209–0204
PREPARATION AND REVIEW
DRAWN BY BD
DESIGNER AB
PROJ. MGR. NHJ
PEER REVIEW

SHEET NUMBER:

P0.1

NUMBER: OF:

C:\Users\Mike Mahoney\Desktop\Contra Costa Fine Arts Remodel – CAD Work 5–11\CAD files\DSA BACK CHECK\P0.1.dwg 6/17/2011 12:11 PM Mike Mahoney

PLUMBING FIXTURE SCHEDULE

FIXTURE TAG	DESCRIPTION	ROUGH-IN						REMARKS (1)(2)(3)(4) ◄ APPLIES TO ALL PLUMBING FIXTURES
		SS	V	CW	HW	TW	G	
DF-1	DRINKING FOUNTAIN (ACCESSIBLE)	2"	2"	1/2"	–	–		HI-LOW DUAL HEIGHT, WALL MOUNTED, STAINLESS STEEL, VANDAL PROOF BOTTOM PLATES, WITH SUPPORT CARRIER, MOUNTING PLATE.
FD-1	FLOOR DRAIN	2"	2"	–	–	–		(7)
HB-1	HOSE BIBB (INTERIOR)	–	–	3/4"	–	–	–	WITH INTEGRAL VACUUM BREAKER.
L-1	LAVATORY	2"	1-1/2"	1/2"	1/2"	–	–	WHITE VITREOUS CHINA, WALL MOUNTED, WITH SINGLE LEVER FAUCET AND POP-UP DRAIN.
L-2	LAVATORY (ACCESSIBLE)	2"	1-1/2"	1/2"	1/2"	–	–	WHITE VITREOUS CHINA, WALL MOUNTED, WITH SINGLE LEVER FAUCET AND GRID DRAIN, ADA COMPLIANT.
TP-1	TRAP PRIMER	–	–	1/2"	–	–	–	BRASS BODY, ADJUSTIBLE, COMPLETE WITH 1/2" COPPER TYPE L PIPE TO RECEPTOR. INSTALL WITH SHUT-OFF VALVE.
UR-1	URINAL	2"	1-1/2"	1"	–	–	–	FLUSH VALVE, 0.50 GPF, SIPHON JET, WALL MOUNTED, VITREOUS CHINA, WALL HANGER.
UR-2	URINAL (ACCESSIBLE)	2"	1-1/2"	1"	–	–	–	FLUSH VALVE, 0.50 GPF, SIPHON JET, WALL MOUNTED, VITREOUS CHINA, WALL HANGER. ADA COMPLIANT.
WC-1	WATER CLOSET	4"	2"	1-1/4"	–	–	–	WHITE VITREOUS CHINA, FLUSH VALVE 1.28 GPF, WALL HUNG, ELONGATED BOWL, OPEN FRONT SEAT.
WC-2	WATER CLOSET (ACCESSIBLE)	4"	2"	1-1/4"	–	–	–	WHITE VITREOUS CHINA, FLUSH VALVE 1.28 GPF, WALL HUNG, ELONGATED BOWL, OPEN FRONT SEAT, ADA COMPLIANT.

NOTES:

(1) THE GENERAL LAYOUT OF THE CW, HW, TW, SS, & V PIPING SHOWN ON THE DRAWING INDICATES BRANCH RUNOUTS THAT TERMINATE AT INDIVIDUAL OR GROUP OF PLUMBING FIXTURES AND EQUIPMENT. THE PIPING SHALL BE CONSIDERED CONTINUOUS AND FINALLY CONNECTED TO THE PLUMBING FIXTURE(S) AND EQUIPMENT. PROVIDE SERVICE SUPPLY STOPS AT EACH PLUMBING FIXTURE(S) AND EQUIPMENT.

(2) ALL STAFF LAVATORY FAUCETS SHALL BE FITTED WITH AN APPROVED FLOW CONTROL DEVICE ALLOWING A MAXIMUM FLOW RATE OF 1.5 GPM. ALL PUBLIC LAVATORY FAUCETS SHALL BE FITTED WITH AN APPROVED FLOW CONTROL DEVICE ALLOWING A MAXIMUM OF 0.5 GPM. ALL SHOWER HEADS AND HAND HELD SHOWERS SHALL BE FITTED WITH AN APPROVED FLOW CONTROL DEVICE ALLOWING A MAXIMUM OF 1.5 GPM.

(3) ALL WATER CLOSETS SHALL BE DUAL FLUSH TYPE USING 1.6 AND 0.9 GALLONS PER FLUSH.

(4) INSULATE ALL ACCESSIBLE LAVATORY AND SINK TRAPS AND HOT AND COLD WATER SUPPLIES PER ADA REQUIREMENTS. PROVIDE OFFSET DRAIN. INSULATION SHALL HAVE FLAME SPREAD RATING (0-25); SMOKE DEVELOPE RATING (0-450).

(5) ROUGH-IN UTILITIES AND MAKE FINAL CONNECTION. EQUIPMENT IS NIPW AND IS FURNISHED UNDER ANOTHER DIVISION.

(6) PROVIDE AIR GAP FITTING FOR DISHWASHER DRAIN. SEE ELECTRICAL DRAWINGS FOR ELECTRICAL POWER AND WALL SWITCH FOR DISPOSAL.

(7) PROVIDE TRAP PRIMER VALVE INCLUDING 1/2" TRAP PRIMER LINE FROM VALVE TO FLOOR DRAIN/FLOOR SINK.

PROJECT RECORD DRAWINGS
6/16/2011
CONTRACTOR: BIG BEARS PLUMBING

REVISION	DESCRIPTION	INITIAL	DATE

ISSUED FOR PROGRESS REVIEW	05-20-09
ISSUED FOR PLAN CHECK - DSA	07-01-09
ISSUED FOR PERMIT	
ISSUED FOR BID	11-18-09
ISSUED FOR CONSTRUCTION	

SEAL:

CONSULTANT:

INTERACTIVE RESOURCES
ARCHITECTURE • PLANNING • ENGINEERING
117 PARK PLACE
POINT RICHMOND
CALIFORNIA 94801
(510) 236-7435
(FAX) 232-5325
http//www.intres.com

PROJECT:

APPLIED ARTS REMODEL

CONTRA COSTA COLLEGE
2600 MISSION BELL DR.
SAN PABLO, CA.

CONTRA COSTA COMMUNITY COLLEGE DISTRICT

SJ ENGINEERS
300 Frank H. Ogawa Plaza
Suite 308
Oakland, CA 94612
Tel: (510) 832-1505
Fax: (510) 832-1507
Job No: 209-0204

SHEET TITLE:

SCHEDULES PLUMBING

PROJ. NO.	2009.0204
PREPARATION AND REVIEW	
DRAWN BY	BG
DESIGNER	AB
PROJ. MGR.	NHJ
PEER REVIEW	

SHEET NUMBER:

P0.2

NUMBER: OF:

© \\pwn\Mike Mahoney\Desktop\Contra Costa Fine Arts Remodel - CAD Work 5-11\CAD files\DSA BACK CHECK\P0.2.dwg 6/17/2011 12:12 PM Mike Mahoney

SHEET NOTES:

1. REMOVE AND DISPOSE OF EXISTING FLOOR MOUNTED WATER CLOSET INCLUDING SANITARY WASTE, VENT, CW PIPING, FLUSHOMETER VALVE AND ALL SUPPORTS.
2. REMOVE AND DISPOSE OF EXISTING WALL HUNG URINAL, INCLUDING SANITRAY WASTE, VENT, CW PIPING, FLUSHOMETER VALVE AN ALL SUPPORTS.
3. REMOVE AND DISPOSE OF EXISTING LAVATORY, INCLUDING SANITARY WASTE, VENT, HW, CW PIPING, FAUCET, SUPPLY STOPS AND ALL SUPPORTS.
4. REMOVE AND DISPOSE OF EXISTING DRINKING FOUNTAIN, INCLUDING COOLING UNIT. CAP EXISTING SANITARY WASTE, VENT, AND CW PIPES FUTURE CONNECTION TO NEW FIXTURE.
5. REMOVE AND DISPOSE OF EXISTING FLOOR DRAIN, INCLUDING SANITARY WASTE, VENT, AND CW PIPING FROM TRAP PRIMER.
6. SAW-CUT EXISTING FLOOR SLAB. CUT, CAP AND REMOVE SECTION OF EXISTING SANITARY SEWER PIPE BELOW SLAB. FIELD VERIFY EXACT LOCATION.
7. REMOVE SECTION OF (E) SANITARY SEWER PIPE BELOW SLAB. FIELD VERIFY EXACT LOCATION.
8. REMOVE AND DISPOSE OF EXISTING FLOOR CLEANOUT.
9. CUT, CAP AND REMOVE SECTION OF DOMESTIC COLD AND HOT WATER PIPING ABOVE CEILING, INCLUDING PIPE INSULATION, HANGERS, AND SUPPORTS.
10. EXISTING DOMESTIC COLD AND HOT WATER SHUT-OFF VALVES ABOVE CEILING TO REMAIN.
11. EXISTING CORNER FLOOR MOUNTED JANITOR'S SINK TO REMAIN.
12. EXISTING FLOOR DRAIN TO REMAIN.
13. EXISTING FLOOR CLEANOUT TO REMAIN.
14. EXISTING SANITARY SEWER PIPING BELOW FLOOR SLAB TO REMAIN. VERIFY EXACT LOCATION IN FIELD.
15. EXISTING SANITARY WASTE, VENT, AND COLD WATER PIPING IN WALL TO REMAIN. CAP FOR FUTURE CONNECTION TO NEW DRINKING FOUNTAIN.
16. EXISTING SANITARY WASTE VENT COLD AND HOT WATER PIPING IN WALL TO REMAIN. CAP FOR FUTURE CONNECTION TO NEW LAVATORY FUTURE.
17. EXISTING COLD WATER AND HOT WATER PIPING IN WALL. CAP FOR FUTURE CONNECTION TO NEW LAVATORY FIXTURE.
18. EXISTING COLD WATER, HOT WATER, GAS AND VAC PIPING ABOVE CEILING TO REMAIN. VERIFY EXACT LOCATION IN FIELD.

REMOVALL ALL CHALK BOARDS AND PROJECTION SCREEN, TACK BOARD, TYP.

REMOVE (E) DOOR & SIDE LITE FRAME

SAWCUT & REMOVE (E) PARTIAL WALLS

REMOVE (E) DOOR & SLIDE LITE FRAME

REMOVE (E) DRINKING FOUNTAIN & RELOCATE (E) STEEL PIPES

REMOVE (E) DOOR & FRAME

REMOVE (E) WALLS, WINDOWS AND DOORS, TYP

REMOVE (E) CONC. SLAB, TYP.

REMOVE (E) WINGWALLS, CONC. CURB, CERAMIC WALL/FLOOR TILE, LAVATORIES, COUNTER, TOILET PARTITIONS AND FIXTURES

REMOVE (E) CARPET, WALL AND DOOR

SAWCUT AND REMOVE PARTIAL (E) WALL

REMOVE (E) DRINKING FOUNTAIN

REMOVE & RELOCATE (E) STEEL PIPE WING WALL

REMOVE (E) WHITE BOARDS AND RELOCATE

REMOVE (E) WALL AND DOOR

REMOVE (E) WINGWALL, CONC. CURB, CERAMIC WALL/FLOOR TILE, LAVATORIES, COUNTER, TOILET PARTITION AND FIXTURES

REMOVE (E) GLASS WALLS AND DOORS, TYP

REMOVE (E) SLIDING CHALK BOARD

REMOVE (E) CASEWORK, TYP.

(E) CABINET TO REMAIN

REMOVE (E) WINDOW, DOORS AND WALL

REMOVE (E) LOCKERS AND RELOCATE AS DIRECTED BY OWNER

PROJECT RECORD DRAWINGS
6/16/2011
CONTRACTOR: BIG BEARS PLUMBING

20 **FIRST FLOOR - DEMO PLAN - PLUMBING**
SCALE: 1/8"=1'-0"

REFERENCE NORTH

1" 0" 4' 8' 12' 16' 20'
1/8" =1'-0"

REVISION	DESCRIPTION	INITIAL	DATE

ISSUED FOR PROGRESS REVIEW	05-20-09
ISSUED FOR PLAN CHECK - DSA	07-01-09
ISSUED FOR PERMIT	
ISSUED FOR BID	11-18-09
ISSUED FOR CONSTRUCTION	

SEAL:

CONSULTANT:

INTERACTIVE RESOURCES
ARCHITECTURE • PLANNING • ENGINEERING
117 PARK PLACE
POINT RICHMOND
CALIFORNIA 94801
(510) 236-7435
(FAX) 232-5325
http://www.intres.com

PROJECT:

APPLIED ARTS REMODEL

CONTRA COSTA COLLEGE
2600 MISSION BELL DR.
SAN PABLO, CA.

CONTRA COSTA COMMUNITY COLLEGE DISTRICT

SJ ENGINEERS
300 Frank H. Ogawa Plaza
Suite 308
Oakland, CA 94612
Tel: (510) 832-1505
Fax: (510) 832-1507
Job No: 209-0204

SHEET TITLE:

FIRST FLOOR DEMO PLAN PLUMBING

PROJ. NO.	209-0204
PREPARATION AND REVIEW	
DRAWN BY	BD
DESIGNER	AB
PROJ. MGR.	NHJ
PEER REVIEW	

SHEET NUMBER:

P1.1

NUMBER: OF:

© \\Jsmf\Mac Mahoney\Desktop\Contra Costa Fine Arts Remodel - CAD Work 5-11\CAD files\SHEETS BASIC CHECKED\P1.1.dwg 6/17/2011 12:51 PM Mark Mahoney

SHEET NOTES:

1. REMOVE AND DISPOSE OF EXISTING FLOOR MOUNTED WATER CLOSET INCLUDING SANITARY WASTE, VENT, CW PIPING, FLUSHOMETER VALVE AND ALL SUPPORTS.
2. REMOVE AND DISPOSE OF EXISTING WALL HUNG URINAL, INCLUDING SANITRAY WASTE, VENT, CW PIPING, FLUSHOMETER VALVE AN ALL SUPPORTS.
3. REMOVE AND DISPOSE OF EXISTING LAVATORY, INCLUDING SANITARY WASTE, VENT, HW, CW PIPING, FAUCET, SUPPLY STOPS AND ALL SUPPORTS.
4. REMOVE AND DISPOSE OF EXISTING DRINKING FOUNTAIN, INCLUDING COOLING UNIT. CAP EXISTING SANITARY WASTE, VENT, AND CW PIPES FUTURE CONNECTION TO NEW FIXTURE.
5. REMOVE AND DISPOSE OF EXISTING FLOOR DRAIN, INCLUDING SANITARY WASTE, VENT, AND CW PIPING FROM TRAP PRIMER.
6. REMOVE SECTION OF (E) SANITARY SEWER PIPE BELOW SLAB. FIELD VERIFY EXACT LOCATION.
7. REMOVE AND DISPOSE OF EXISTING FLOOR CLEANOUT.
8. CUT, CAP AND REMOVE SECTION OF DOMESTIC COLD AND HOT WATER PIPING ABOVE CEILING, INCLUDING PIPE INSULATION, HANGERS, AND SUPPORTS.
9. EXISTING DOMESTIC COLD AND HOT WATER SHUT-OFF VALVES ABOVE CEILING TO REMAIN.
10. EXISTING CORNER FLOOR MOUNTED JANITOR'S SINK TO REMAIN.
11. EXISTING FLOOR DRAIN TO REMAIN.
12. EXISTING FLOOR CLEANOUT TO REMAIN.
13. EXISTING SANITARY SEWER PIPING BELOW FLOOR SLAB TO REMAIN. VERIFY EXACT LOCATION IN FIELD.
14. EXISTING SANITARY WASTE, VENT, AND COLD WATER PIPING IN WALL TO REMAIN. CAP FOR FUTURE CONNECTION TO NEW DRINKING FOUNTAIN.
15. EXISTING SANITARY WASTE VENT COLD AND HOT WATER PIPING IN WALL TO REMAIN. CAP FOR FUTURE CONNECTION TO NEW LAVATORY FUTURE.
16. EXISTING WATER CLOSET TO REMAIN.
17. EXISTING WASH FOUNTAIN TO REMAIN.
18. EXISTING DOMESTIC COLD AND HOT WATER MAIN. VERIFY EXACT LOCATION IN FIELD.

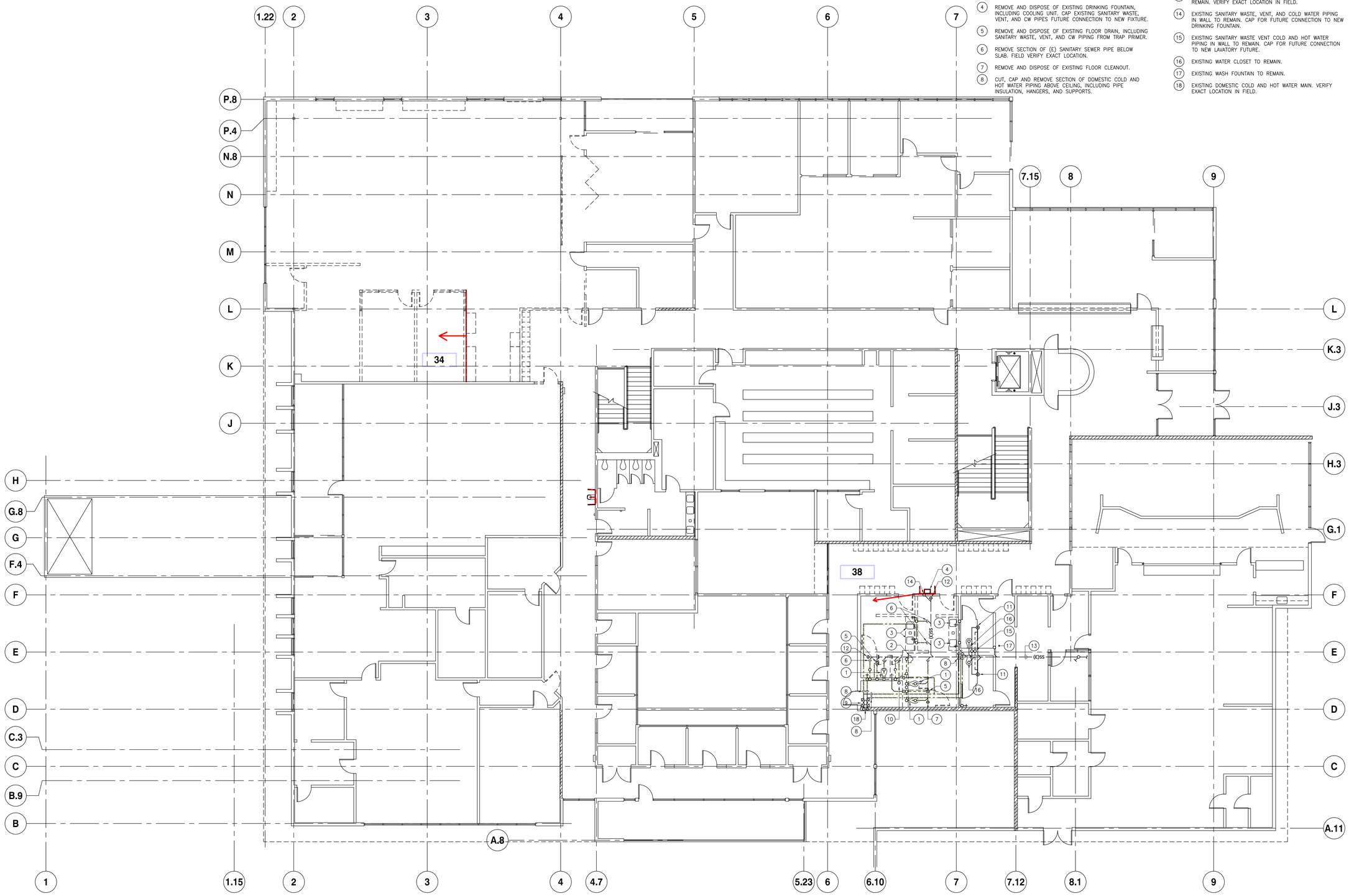

20 SECOND FLOOR - DEMO PLAN - PLUMBING
SCALE: 1/8"=1'-0"

REFERENCE NORTH

PROJECT RECORD DRAWINGS
6/16/2011
CONTRACTOR: BIG BEARS PLUMBING

REVISION	DESCRIPTION	INITIAL	DATE

ISSUED FOR PROGRESS REVIEW	05-20-09
ISSUED FOR PLAN CHECK - DSA	07-01-09
ISSUED FOR PERMIT	
ISSUED FOR BID	11-18-09
ISSUED FOR CONSTRUCTION	

SEAL:

CONSULTANT:

INTERACTIVE RESOURCES
ARCHITECTURE • PLANNING • ENGINEERING
117 PARK PLACE
POINT RICHMOND
CALIFORNIA 94801
(510) 236-7435
(FAX) 232-5325
http//www.intres.com

PROJECT:

APPLIED ARTS REMODEL

CONTRA COSTA COLLEGE
2600 MISSION BELL DR.
SAN PABLO, CA.

CONTRA COSTA COMMUNITY COLLEGE DISTRICT

SJ ENGINEERS
300 Frank H. Ogawa Plaza
Suite 308
Oakland, CA 94612
Tel: (510) 832-1505
Fax: (510) 832-1507
Job No: 209-0204

SHEET TITLE:

SECOND FLOOR DEMO PLAN PLUMBING

PROJ. NO.	209-0204
PREPARATION AND REVIEW	
DRAWN BY	BD
DESIGNER	AB
PROJ. MGR.	NHJ
PEER REVIEW	

SHEET NUMBER:

P1.2

NUMBER: OF:

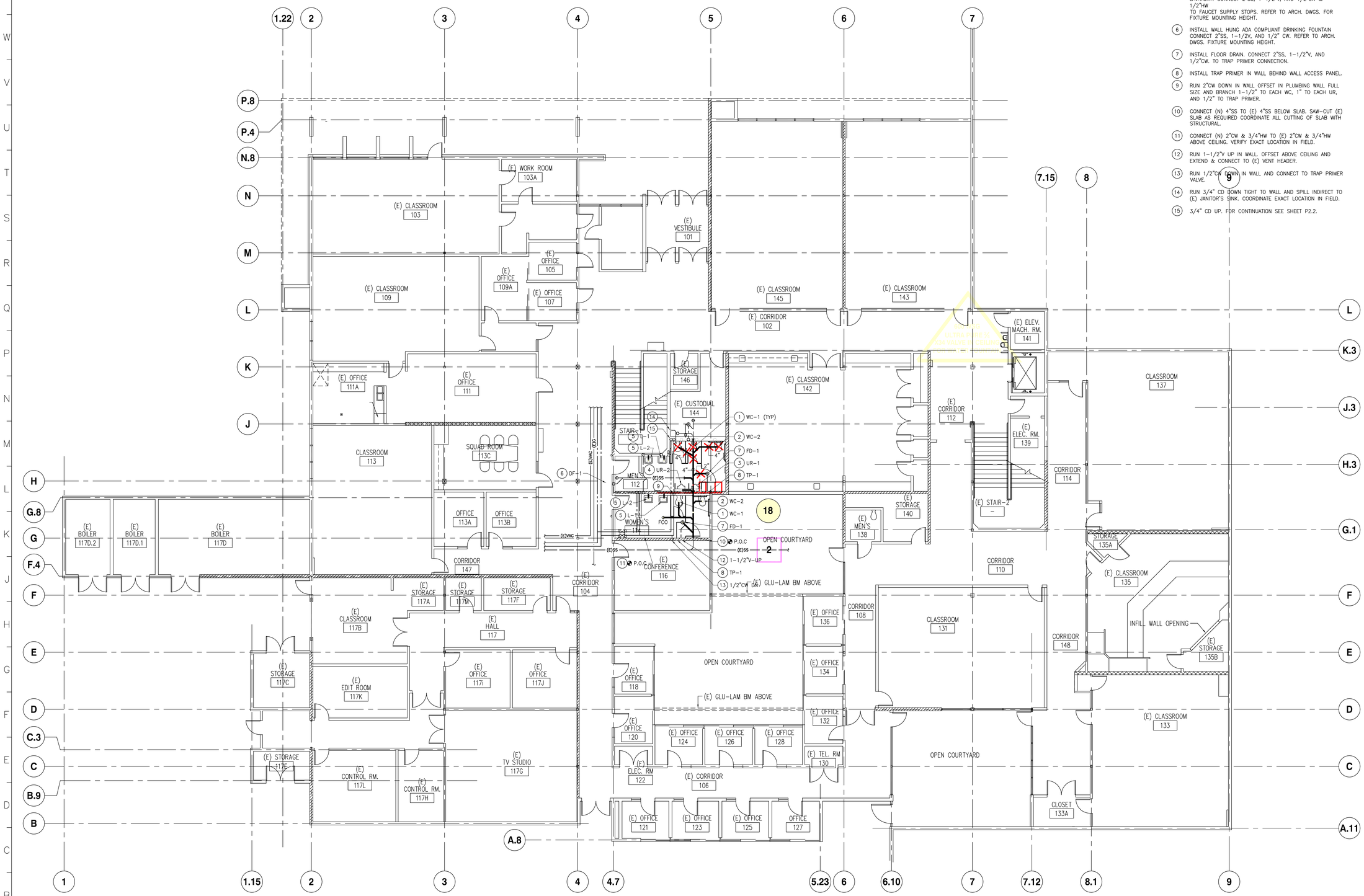

20 FIRST FLOOR PLAN - PLUMBING
SCALE: 1/8"=1'-0"

REFERENCE NORTH

PROJECT RECORD DRAWINGS
6/16/2011
CONTRACTOR: BIG BEARS PLUMBING

SHEET NOTES:

1. INSTALL WATER CLOSET CONNECT 4"SS, 2"V, AND 1-1/4"CW TO FLUSH VALVE.
2. INSTALL ADA COMPLIANT WATER CLOSET. CONNECT 4"SS, 2"V, AND 1-1/4"CW TO FLUSH VALVE.
3. INSTALL WALL HUNG URINAL. CONNECT 2"SS, 1-1/2"V, AND 1"CW TO FLUSH VALVE
4. INSTALL WALL HUNG ADA COMPLIANT URINAL. CONNECT 2"SS. 1-1/2"V, AND 1"CW TO FLUSH VALVE. REFER TO ARCH. DWGS. FOR FIXTURE MOUNTING HEIGHT.
5. INSTALL WALL HUNG ADA COMPLIANT (WHERE INDICATED) LAVATORY. CONNECT 2"SS, 1-1/2"V, AND 1/2"CW & 1/2"HW TO FAUCET SUPPLY STOPS. REFER TO ARCH. DWGS. FOR FIXTURE MOUNTING HEIGHT.
6. INSTALL WALL HUNG ADA COMPLIANT DRINKING FOUNTAIN CONNECT 2"SS, 1-1/2V, AND 1/2" CW. REFER TO ARCH. DWGS. FIXTURE MOUNTING HEIGHT.
7. INSTALL FLOOR DRAIN. CONNECT 2"SS, 1-1/2"V, AND 1/2"CW. TO TRAP PRIMER CONNECTION.
8. INSTALL TRAP PRIMER IN WALL BEHIND WALL ACCESS PANEL.
9. RUN 2"CW DOWN IN WALL OFFSET IN PLUMBING WALL FULL SIZE AND BRANCH 1-1/2" TO EACH WC, 1" TO EACH UR, AND 1/2" TO TRAP PRIMER.
10. CONNECT (N) 4"SS TO (E) 4"SS BELOW SLAB. SAW-CUT (E) SLAB AS REQUIRED COORDINATE ALL CUTTING OF SLAB WITH STRUCTURAL.
11. CONNECT (N) 2"CW & 3/4"HW TO (E) 2"CW & 3/4"HW ABOVE CEILING. VERIFY EXACT LOCATION IN FIELD.
12. RUN 1-1/2"V UP IN WALL. OFFSET ABOVE CEILING AND EXTEND & CONNECT TO (E) VENT HEADER.
13. RUN 1/2"CW DOWN IN WALL AND CONNECT TO TRAP PRIMER VALVE.
14. RUN 3/4" CD DOWN TIGHT TO WALL AND SPILL INDIRECT TO (E) JANITOR'S SINK. COORDINATE EXACT LOCATION IN FIELD.
15. 3/4" CD UP. FOR CONTINUATION SEE SHEET P2.2.

REVISION	DESCRIPTION	INITIAL	DATE

ISSUED FOR PROGRESS REVIEW	05-20-09
ISSUED FOR PLAN CHECK - DSA	07-01-09
ISSUED FOR PERMIT	
ISSUED FOR BID	11-18-09
ISSUED FOR CONSTRUCTION	

SEAL:

CONSULTANT:

INTERACTIVE RESOURCES
ARCHITECTURE • PLANNING • ENGINEERING
117 PARK PLACE
POINT RICHMOND
CALIFORNIA 94801
(510) 236-7435
(FAX) 232-5325
http//www.intres.com

PROJECT:

APPLIED ARTS REMODEL

CONTRA COSTA COLLEGE
2600 MISSION BELL DR.
SAN PABLO, CA.

CONTRA COSTA COMMUNITY COLLEGE DISTRICT

SJ ENGINEERS
300 Frank H. Ogawa Plaza
Suite 308
Oakland, CA 94612
Tel: (510) 832-1505
Fax: (510) 832-1507
Job No: 209-0204

SHEET TITLE:

FIRST FLOOR PLAN PLUMBING

PROJ. NO.	209-0204
PREPARATION AND REVIEW	
DRAWN BY	BD
DESIGNER	AB
PROJ. MGR.	NHJ
PEER REVIEW	

SHEET NUMBER:

P2.1

NUMBER: OF:

SHEET NOTES:

1. INSTALL WATER CLOSET CONNECT 4"SS, 2"V, AND 1-1/4"CW TO FLUSH VALVE.
2. INSTALL ADA COMPLIANT WATER CLOSET. CONNECT 4"SS, 2"V, AND 1-1/4"CW TO FLUSH VALVE.
3. INSTALL WALL HUNG URINAL. CONNECT 2"SS, 1-1/2"V, AND 1"CW TO FLUSH VALVE
4. INSTALL WALL HUNG ADA COMPLIANT URINAL. CONNECT 2"SS. 1-1/2"V, AND 1"CW TO FLUSH VALVE. REFER TO ARCH. DWGS. FOR FIXTURE MOUNTING HEIGHT.
5. INSTALL WALL HUNG ADA COMPLIANT (WHERE INDICATED) LAVATORY. CONNECT 2"SS, 1-1/2"V, AND 1/2"CW & 1/2"HW TO FAUCET SUPPLY STOPS. REFER TO ARCH. DWGS. FOR FIXTURE MOUNTING HEIGHT.
6. INSTALL WALL HUNG ADA COMPLIANT DRINKING FOUNTAIN CONNECT 2"SS, 1-1/2V, AND 1/2" CW. REFER TO ARCH. DWGS. FIXTURE MOUNTING HEIGHT.
7. INSTALL FLOOR DRAIN. CONNECT 2"SS, 1-1/2"V, AND 1/2"CW. TO TRAP PRIMER CONNECTION.
8. INSTALL TRAP PRIMER IN WALL BEHIND WALL ACCESS PANEL.
9. (E)2"CW AND 1"HW DOWN IN WALL. CONNECT (N) 2"CW AND 1"HW TO (E) ABOVE CEILING.
10. RUN (N) 2"CW DOWN IN PLUMBING WALL. OFFSET FULL SIZE AND BRANCH 1-1/4" TO EACH WC, 1" TO EACH UR, AND 1/2" TO EACH TRAP PRIMER VALVE.
11. MECHANICAL HVAC UNIT. REFER TO MECH. DWGS.
12. (N) 3/4"CD FROM HVAC UNIT CONDENSATE PUMP. RUN UP INTO CEILING SPACE.
13. (N) 3/4"CD ABOVE CEILING. FEILD ROUTE AND COORDINATE WITH (E) CONDITIONS.
14. RUN (N) 3/4"CD DOWN. FOR CONTINUATION SEE SHEET P2.1.

REVISION	DESCRIPTION	INITIAL	DATE

ISSUED FOR PROGRESS REVIEW	05-20-09
ISSUED FOR PLAN CHECK - DSA	07-01-09
ISSUED FOR PERMIT	
ISSUED FOR BID	11-18-09
ISSUED FOR CONSTRUCTION	

SEAL:

CONSULTANT:

INTERACTIVE RESOURCES
ARCHITECTURE • PLANNING • ENGINEERING
117 PARK PLACE
POINT RICHMOND
CALIFORNIA 94801
(510) 236-7435
(FAX) 232-5325
http://www.intres.com

PROJECT:

APPLIED ARTS REMODEL

CONTRA COSTA COLLEGE
2600 MISSION BELL DR.
SAN PABLO, CA.

CONTRA COSTA COMMUNITY COLLEGE DISTRICT

SJ ENGINEERS
300 Frank H. Ogawa Plaza
Suite 308
Oakland, CA 94612
Tel: (510) 832-1505
Fax: (510) 832-1507
Job No: 209-0204

SHEET TITLE:

SECOND FLOOR PLAN PLUMBING

PROJ. NO.	209-0204
PREPARATION AND REVIEW	
DRAWN BY	BH
DESIGNER	AB
PROJ. MGR.	NHJ
PEER REVIEW	

SHEET NUMBER:

P2.2

NUMBER: OF:

PROJECT RECORD DRAWINGS
6/16/2011
CONTRACTOR: BIG BEARS PLUMBING

20 **SECOND FLOOR PLAN - PLUMBING**
SCALE: 1/8"=1'-0"

REFERENCE NORTH

C:\Users\Mike Mahoney\Desktop\Contra Costa Fine Arts Remodel - CAD Work 5-11\CAD files\DSA BACK ORDER\P2.2.dwg 6/17/2011 12:19 PM Mike Mahoney

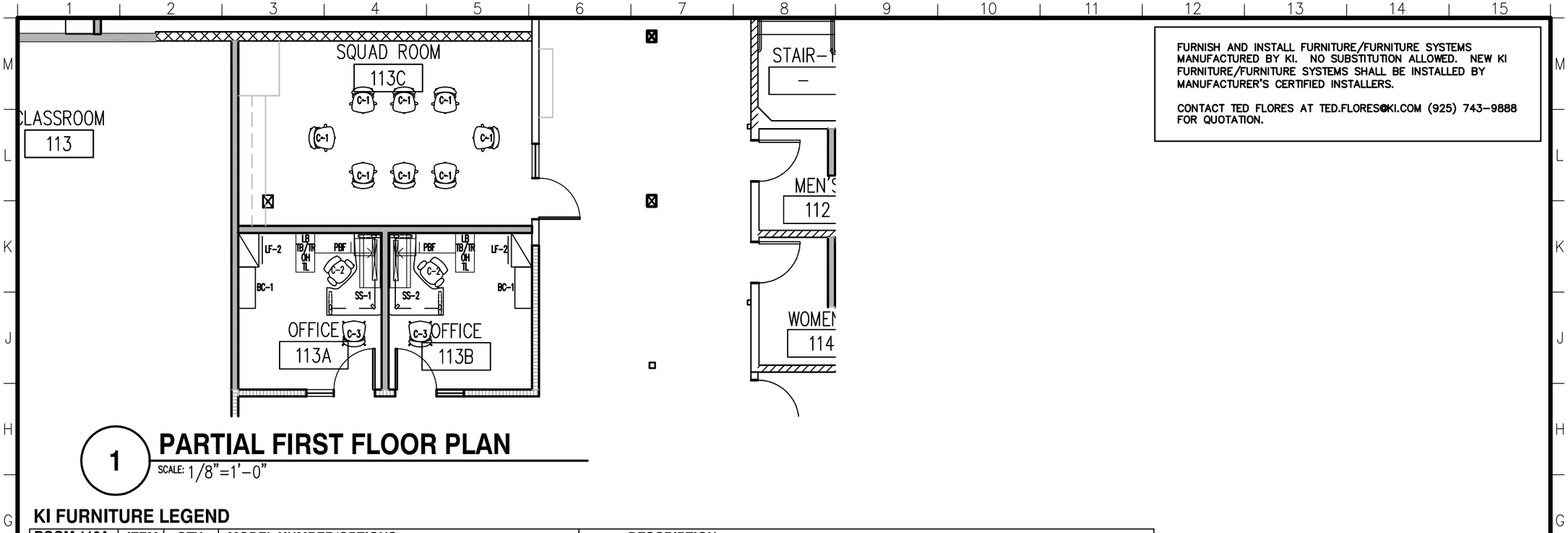

1 **PARTIAL FIRST FLOOR PLAN**

SCALE: 1/8"=1'-0"

FURNISH AND INSTALL FURNITURE/FURNITURE SYSTEMS MANUFACTURED BY KI. NO SUBSTITUTION ALLOWED. NEW KI FURNITURE/FURNITURE SYSTEMS SHALL BE INSTALLED BY MANUFACTURER'S CERTIFIED INSTALLERS.

CONTACT TED FLORES AT TED.FLORES@KI.COM (925) 743-9888 FOR QUOTATION.

KI FURNITURE LEGEND

	ITEM	QTY	MODEL NUMBER/OPTIONS	DESCRIPTION
ROOM 113A	OH	1	PRDS48/WW/LB	UNIV. OVRHD w/STEEL DOOR, LOAD BAR MNT,48"W
	TL	1	TLT5.36	OVERHEAD TASK LIGHT,36"W,FOR 42 & 48" OVERHEADS
	C-2	1	ENGP/AA	ENGAGE ADJ ARMCHAIR,ADJ & PIVOTING ARMS,POLY BACK
			KI62/JR30	IMPRESS TASK CHAIR, PEDESTAL BASE, PIVOT ARMS
			KI74/JR30	IMPRESS ULTRA TASK CHAIR, PEDESTAL BASE, MESH MID-BACK, PIVOT ARMS
	SS-1	1	GSSH24724824S/CR-74P:PUN:RM:NW	GEN SQUARE SHOE,CRANK HT ADJ,74P EDGE,24x72x48x24"
	BC-1	1	S7B/3651015	7SF BOOKCASE-36Wx54-9/16Hx15"D-3 ADJ SHELVES
	LF-2	1	S7L/305104D	7SF LAT FILE,4H W/FRONT-TO-BACK FOLDER BARS-30Wx18Dx54-9/16"H
	PBF	1	S7P/1520MPBF	7SF MOBILE PED-PEN/BOX/FILE-20" NOMINAL DEPTH
	C-3	1	TLNAP	TORSION FOUR-LEG CHAIR,ARMLESS,POLY SEAT/BACK
	LB	1	SWLB.48	WALL-MOUNTED LOADBAR, 48W
	TB/TR	1	PTBO.4820	OVERHEAD TACKBOARD, 20Hx48W
			FWTRO.4820	TOOL RAIL W/ ACCESSORIES KIT, 20Hx48W
ROOM 113B	**ITEM**	**QTY**	**MODEL NUMBER/OPTIONS**	**DESCRIPTION**
	OH	1	PRDS48/WW/LB	UNIV. OVRHD w/STEEL DOOR, LOAD BAR MNT,48"W
	TL	1	TLT5.36	OVERHEAD TASK LIGHT,36"W,FOR 42 & 48" OVERHEADS
	C-2	1	ENGP/AA	ENGAGE ADJ ARMCHAIR,ADJ & PIVOTING ARMS,POLY BACK
			KI62/JR30	IMPRESS TASK CHAIR, PEDESTAL BASE, PIVOT ARMS
			KI74/JR30	IMPRESS ULTRA TASK CHAIR, PEDESTAL BASE, MESH MID-BACK, PIVOT ARMS
	SS-2	1	GSSH24487224S/CR-74P:PUN:LM:NW	GEN SQUARE SHOE,CRANK HT ADJ,74P EDGE,24x48x72x24"
	BC-1	1	S7B/3651015	7SF BOOKCASE-36Wx54-9/16Hx15"D-3 ADJ SHELVES
	LF-2	1	S7L/305104D	7SF LAT FILE,4H W/FRONT-TO-BACK FOLDER BARS-30Wx18Dx54-9/16"H
	PBF	1	S7P/1520MPBF	7SF MOBILE PED-PEN/BOX/FILE-20" NOMINAL DEPTH
	C-3	1	TLNAP	TORSION FOUR-LEG CHAIR,ARMLESS,POLY SEAT/BACK
	LB	1	SWLB.48	WALL-MOUNTED LOADBAR, 48W
	TB/TR	1	PTBO.4820	OVERHEAD TACKBOARD, 20Hx48W
			FWTRO.4820	TOOL RAIL W/ ACCESSORIES KIT, 20Hx48W
ROOM 113C	**ITEM**	**QTY**	**MODEL NUMBER/OPTIONS**	**DESCRIPTION**
	C-1	8	TPNAU	TORSION PEDESTAL BASE CHAIR NO/ARMS,UPHOL SEAT/BACK

PROJECT RECORD DRAWINGS
6/16/2011
CONTRACTOR: JOHNSTONE MOYER INC.

JOB NO. 2008-090.01
PAGE **ADD-1A**
DRAWN:
SCALE: NTS
DATE: 1/8"=1'-0"

CONTRA COSTA COLLEGE
APPLIED ARTS REMODEL
2600 MISSION BELL DR.
SAN PABLO, CA.

REVISION	DESCRIPTION WITH DATE AND NAME:
1	ADDENDUM NO. 1

INTERACTIVE RESOURCES
ARCHITECTURE • PLANNING • ENGINEERING
117 PARK PLACE
POINT RICHMOND
CALIFORNIA 94801
(510) 236-7345
(FAX) 232-5325
http://www.intres.com

C:\Users\Mike Mahoney\Desktop\Contra Costa Fine Arts Remodel - CAD Work 5-11\CAD files\Addendum 1\Addendum 1\ADD-1A.dwg 6/23/2011 3:22 PM Mike Mahoney

OFFICE 252D
OFFICE 252E
OFFICE 252F
OFFICE 252G
OFFICE 252H
OFFICE 252C
OFFICE 252B
OFFICE 252A
MATH READING RM. 252
(E) BALCONY
SHALLOW WALL DISPLAY CASES
CLASSROOM 250
(11) CHAIRS
I.T. ROOM 213
STORAGE 253
(E) STAFF LOUNGE 254
OFFICE 252J
TUTORING 252L
TESTING 252K
CLASSROOM 251
(E) OFFICE 206A
DOWN

PROJECT RECORD DRAWINGS
6/16/2011
CONTRACTOR: JOHNSTONE MOYER INC.

1 PARTIAL SECOND FLOOR PLAN

SCALE: 1/8"=1'-0"

JOB NO. 2008-090.01
PAGE ADD-1B
DRAWN:
SCALE: NTS
DATE: 1/8"=1'-0"

CONTRA COSTA COLLEGE
APPLIED ARTS REMODEL
2600 MISSION BELL DR.
SAN PABLO, CA.

REVISION	DESCRIPTION WITH DATE AND NAME:
1	ADDENDUM NO. 1

INTERACTIVE RESOURCES
ARCHITECTURE • PLANNING • ENGINEERING
117 PARK PLACE
POINT RICHMOND
CALIFORNIA 94801
(510) 236-7345
(FAX) 232-5325
http://www.intres.com

C:\Users\Mike Mahoney\Desktop\Contra Costa Fine Arts Remodel - CAD Work 5-11\CAD files\Addendum 1\Addendum 1\ADD-1B-1E.dwg 6/23/2011 3:53 PM Mike Mahoney

KI FURNITURE LEGEND

	ITEM	QTY	MODEL NUMBER/OPTIONS	DESCRIPTION
ROOM 252A	OH	1	PRDS48/WW/LB	UNIV. OVRHD w/STEEL DOOR, LOAD BAR MNT,48"W
	TL	1	TLT5.36	OVERHEAD TASK LIGHT,36"W,FOR 42 & 48" OVERHEADS
	C-2	1	ENGP/AA	ENGAGE ADJ ARMCHAIR,ADJ & PIVOTING ARMS,POLY BACK
			KI62/JR30	IMPRESS TASK CHAIR, PEDESTAL BASE, PIVOT ARMS
			KI74/JR30	IMPRESS ULTRA TASK CHAIR, PEDESTAL BASE, MESH MID-BACK, PIVOT ARMS
	SS-3	1	GSSH24487224S/CR-74P:PUN:NM:NW	GEN SQUARE SHOE,CRANK HT ADJ,74P EDGE,24x48x72x24"
	BC-1	1	S7B/3651015	7SF BOOKCASE-36Wx54-9/16Hx15"D-3 ADJ SHELVES
	LF-2	1	S7L/305104D	7SF LAT FILE,4H W/FRONT-TO-BACK FOLDER BARS-30Wx18Dx54-9/16"H
	PBF	1	S7P/1520MPBF	7SF MOBILE PED-PEN/BOX/FILE-20" NOMINAL DEPTH
	C-3	1	TLNAP	TORSION FOUR-LEG CHAIR,ARMLESS,POLY SEAT/BACK
	LB	1	SWLB.48	WALL-MOUNTED LOADBAR, 48W
	TB/TR	1	PTBO.4820	OVERHEAD TACKBOARD, 20Hx48W
			FWTRO.4820	TOOL RAIL W/ ACCESSORIES KIT, 20Hx48W
ROOM 252B	**ITEM**	**QTY**	**MODEL NUMBER/OPTIONS**	**DESCRIPTION**
	OH	1	PRDS48/WW/LB	UNIV. OVRHD w/STEEL DOOR, LOAD BAR MNT,48"W
	TL	1	TLT5.36	OVERHEAD TASK LIGHT,36"W,FOR 42 & 48" OVERHEADS
	C-2	1	ENGP/AA	ENGAGE ADJ ARMCHAIR,ADJ & PIVOTING ARMS,POLY BACK
			KI62/JR30	IMPRESS TASK CHAIR, PEDESTAL BASE, PIVOT ARMS
			KI74/JR30	IMPRESS ULTRA TASK CHAIR, PEDESTAL BASE, MESH MID-BACK, PIVOT ARMS
	SS-4	1	GSSH24724824S/CR-74P:PUN:NM:NW	GEN SQUARE SHOE,CRANK HT ADJ,74P EDGE,24x72x48x24"
	BC-1	1	S7B/3651015	7SF BOOKCASE-36Wx54-9/16Hx15"D-3 ADJ SHELVES
	LF-2	1	S7L/305104D	7SF LAT FILE,4H W/FRONT-TO-BACK FOLDER BARS-30Wx18Dx54-9/16"H
	PBF	1	S7P/1520MPBF	7SF MOBILE PED-PEN/BOX/FILE-20" NOMINAL DEPTH
	C-3	1	TLNAP	TORSION FOUR-LEG CHAIR,ARMLESS,POLY SEAT/BACK
	LB	1	SWLB.48	WALL-MOUNTED LOADBAR, 48W
	TB/TR	1	PTBO.4820	OVERHEAD TACKBOARD, 20Hx48W
			FWTRO.4820	TOOL RAIL W/ ACCESSORIES KIT, 20Hx48W
ROOM 252C	**ITEM**	**QTY**	**MODEL NUMBER/OPTIONS**	**DESCRIPTION**
	OH	1	PRDS48/WW/LB	UNIV. OVRHD w/STEEL DOOR, LOAD BAR MNT,48"W
	TL	1	TLT5.36	OVERHEAD TASK LIGHT,36"W,FOR 42 & 48" OVERHEADS
	C-2	1	ENGP/AA	ENGAGE ADJ ARMCHAIR,ADJ & PIVOTING ARMS,POLY BACK
			KI62/JR30	IMPRESS TASK CHAIR, PEDESTAL BASE, PIVOT ARMS
			KI74/JR30	IMPRESS ULTRA TASK CHAIR, PEDESTAL BASE, MESH MID-BACK, PIVOT ARMS
	SS-4	1	GSSH24724824S/CR-74P:PUN:NM:NW	GEN SQUARE SHOE,CRANK HT ADJ,74P EDGE,24x72x48x24"
	BC-1	1	S7B/3651015	7SF BOOKCASE-36Wx54-9/16Hx15"D-3 ADJ SHELVES
	LF-2	1	S7L/305104D	7SF LAT FILE,4H W/FRONT-TO-BACK FOLDER BARS-30Wx18Dx54-9/16"H
	PBF	1	S7P/1520MPBF	7SF MOBILE PED-PEN/BOX/FILE-20" NOMINAL DEPTH
	C-3	1	TLNAP	TORSION FOUR-LEG CHAIR,ARMLESS,POLY SEAT/BACK
	LB	1	SWLB.48	WALL-MOUNTED LOADBAR, 48W
	TB/TR	1	PTBO.4820	OVERHEAD TACKBOARD, 20Hx48W
			FWTRO.4820	TOOL RAIL W/ ACCESSORIES KIT, 20Hx48W
ROOM 252D	**ITEM**	**QTY**	**MODEL NUMBER/OPTIONS**	**DESCRIPTION**
	OH	1	PRDS48/WW/LB	UNIV. OVRHD w/STEEL DOOR, LOAD BAR MNT,48"W
	TL	1	TLT5.36	OVERHEAD TASK LIGHT,36"W,FOR 42 & 48" OVERHEADS
	C-2	1	ENGP/AA	ENGAGE ADJ ARMCHAIR,ADJ & PIVOTING ARMS,POLY BACK
			KI62/JR30	IMPRESS TASK CHAIR, PEDESTAL BASE, PIVOT ARMS
			KI74/JR30	IMPRESS ULTRA TASK CHAIR, PEDESTAL BASE, MESH MID-BACK, PIVOT ARMS
	SS-4	1	GSSH24724824S/CR-74P:PUN:NM:NW	GEN SQUARE SHOE,CRANK HT ADJ,74P EDGE,24x72x48x24"
	BC-1	1	S7B/3651015	7SF BOOKCASE-36Wx54-9/16Hx15"D-3 ADJ SHELVES
	LF-2	1	S7L/305104D	7SF LAT FILE,4H W/FRONT-TO-BACK FOLDER BARS-30Wx18Dx54-9/16"H
	PBF	1	S7P/1520MPBF	7SF MOBILE PED-PEN/BOX/FILE-20" NOMINAL DEPTH
	C-3	1	TLNAP	TORSION FOUR-LEG CHAIR,ARMLESS,POLY SEAT/BACK
	LB	1	SWLB.48	WALL-MOUNTED LOADBAR, 48W
	TB/TR	1	PTBO.4820	OVERHEAD TACKBOARD, 20Hx48W
			FWTRO.4820	TOOL RAIL W/ ACCESSORIES KIT, 20Hx48W

PROJECT RECORD DRAWINGS
6/16/2011
CONTRACTOR: JOHNSTONE MOYER INC.

JOB NO. 2008-090.01
PAGE ADD-1C
DRAWN:
SCALE: NTS
DATE:
1/8"=1'-0"

CONTRA COSTA COLLEGE
APPLIED ARTS REMODEL
2600 MISSION BELL DR.
SAN PABLO, CA.

REVISION	DESCRIPTION WITH DATE AND NAME:
1	ADDENDUM NO. 1

INTERACTIVE RESOURCES
ARCHITECTURE • PLANNING • ENGINEERING
117 PARK PLACE
POINT RICHMOND
CALIFORNIA 94801
(510) 236-6345
(FAX) 232-5325
http://www.intres.com

C:\Users\Mike Mahoney\Desktop\Contra Costa Fine Arts Remodel - CAD Work 5-11\CAD files\Addendum 1\Addendum 1\ADD-1B-1E.dwg 6/23/2011 3:56 PM Mike Mahoney

KI FURNITURE LEGEND

ROOM 252E	ITEM	QTY	MODEL NUMBER/OPTIONS	DESCRIPTION
	OH	1	PRDS48/WW/LB	UNIV. OVRHD w/STEEL DOOR, LOAD BAR MNT,48"W
	TL	1	TLT5.36	OVERHEAD TASK LIGHT,36"W,FOR 42 & 48" OVERHEADS
	C-2	1	ENGP/AA	ENGAGE ADJ ARMCHAIR,ADJ & PIVOTING ARMS,POLY BACK
			KI62/JR30	IMPRESS TASK CHAIR, PEDESTAL BASE, PIVOT ARMS
			KI74/JR30	IMPRESS ULTRA TASK CHAIR, PEDESTAL BASE, MESH MID-BACK, PIVOT ARMS
	SS-4	1	GSSH24724824S/CR-74P:PUN:NM:NW	GEN SQUARE SHOE,CRANK HT ADJ,74P EDGE,24x72x48x24"
	BC-1	1	S7B/3651015	7SF BOOKCASE-36Wx54-9/16Hx15"D-3 ADJ SHELVES
	LF-2	1	S7L/305104D	7SF LAT FILE,4H W/FRONT-TO-BACK FOLDER BARS-30Wx18Dx54-9/16"H
	PBF	1	S7P/1520MPBF	7SF MOBILE PED-PEN/BOX/FILE-20" NOMINAL DEPTH
	C-3	1	TLNAP	TORSION FOUR-LEG CHAIR,ARMLESS,POLY SEAT/BACK
	LB	1	SWLB.48	WALL-MOUNTED LOADBAR, 48W
	TB/TR	1	PTBO.4820	OVERHEAD TACKBOARD, 20Hx48W
			FWTRO.4820	TOOL RAIL W/ ACCESSORIES KIT, 20Hx48W
ROOM 252F	**ITEM**	**QTY**	**MODEL NUMBER/OPTIONS**	**DESCRIPTION**
	OH	1	PRDS48/WW/LB	UNIV. OVRHD w/STEEL DOOR, LOAD BAR MNT,48"W
	TL	1	TLT5.36	OVERHEAD TASK LIGHT,36"W,FOR 42 & 48" OVERHEADS
	C-2	1	ENGP/AA	ENGAGE ADJ ARMCHAIR,ADJ & PIVOTING ARMS,POLY BACK
			KI62/JR30	IMPRESS TASK CHAIR, PEDESTAL BASE, PIVOT ARMS
			KI74/JR30	IMPRESS ULTRA TASK CHAIR, PEDESTAL BASE, MESH MID-BACK, PIVOT ARMS
	SS-4	1	GSSH24724824S/CR-74P:PUN:NM:NW	GEN SQUARE SHOE,CRANK HT ADJ,74P EDGE,24x72x48x24"
	BC-1	1	S7B/3651015	7SF BOOKCASE-36Wx54-9/16Hx15"D-3 ADJ SHELVES
	LF-2	1	S7L/305104D	7SF LAT FILE,4H W/FRONT-TO-BACK FOLDER BARS-30Wx18Dx54-9/16"H
	PBF	1	S7P/1520MPBF	7SF MOBILE PED-PEN/BOX/FILE-20" NOMINAL DEPTH
	C-3	1	TLNAP	TORSION FOUR-LEG CHAIR,ARMLESS,POLY SEAT/BACK
	LB	1	SWLB.48	WALL-MOUNTED LOADBAR, 48W
	TB/TR	1	PTBO.4820	OVERHEAD TACKBOARD, 20Hx48W
			FWTRO.4820	TOOL RAIL W/ ACCESSORIES KIT, 20Hx48W
ROOM 252G	**ITEM**	**QTY**	**MODEL NUMBER/OPTIONS**	**DESCRIPTION**
	OH	1	PRDS48/WW/LB	UNIV. OVRHD w/STEEL DOOR, LOAD BAR MNT,48"W
	TL	1	TLT5.36	OVERHEAD TASK LIGHT,36"W,FOR 42 & 48" OVERHEADS
	C-2	1	ENGP/AA	ENGAGE ADJ ARMCHAIR,ADJ & PIVOTING ARMS,POLY BACK
			KI62/JR30	IMPRESS TASK CHAIR, PEDESTAL BASE, PIVOT ARMS
			KI74/JR30	IMPRESS ULTRA TASK CHAIR, PEDESTAL BASE, MESH MID-BACK, PIVOT ARMS
	SS-4	1	GSSH24724824S/CR-74P:PUN:NM:NW	GEN SQUARE SHOE,CRANK HT ADJ,74P EDGE,24x72x48x24"
	BC-1	1	S7B/3651015	7SF BOOKCASE-36Wx54-9/16Hx15"D-3 ADJ SHELVES
	LF-2	1	S7L/305104D	7SF LAT FILE,4H W/FRONT-TO-BACK FOLDER BARS-30Wx18Dx54-9/16"H
	PBF	1	S7P/1520MPBF	7SF MOBILE PED-PEN/BOX/FILE-20" NOMINAL DEPTH
	C-3	1	TLNAP	TORSION FOUR-LEG CHAIR,ARMLESS,POLY SEAT/BACK
	LB	1	SWLB.48	WALL-MOUNTED LOADBAR, 48W
	TB/TR	1	PTBO.4820	OVERHEAD TACKBOARD, 20Hx48W
			FWTRO.4820	TOOL RAIL W/ ACCESSORIES KIT, 20Hx48W
ROOM 252H	**ITEM**	**QTY**	**MODEL NUMBER/OPTIONS**	**DESCRIPTION**
	OH	1	PRDS48/WW/LB	UNIV. OVRHD w/STEEL DOOR, LOAD BAR MNT,48"W
	TL	1	TLT5.36	OVERHEAD TASK LIGHT,36"W,FOR 42 & 48" OVERHEADS
	C-2	1	ENGP/AA	ENGAGE ADJ ARMCHAIR,ADJ & PIVOTING ARMS,POLY BACK
			KI62/JR30	IMPRESS TASK CHAIR, PEDESTAL BASE, PIVOT ARMS
			KI74/JR30	IMPRESS ULTRA TASK CHAIR, PEDESTAL BASE, MESH MID-BACK, PIVOT ARMS
	SS-3	1	GSSH24487224S/CR-74P:PUN:NM:NW	GEN SQUARE SHOE,CRANK HT ADJ,74P EDGE,24x48x72x24"
	BC-1	1	S7B/3651015	7SF BOOKCASE-36Wx54-9/16Hx15"D-3 ADJ SHELVES
	LF-2	1	S7L/305104D	7SF LAT FILE,4H W/FRONT-TO-BACK FOLDER BARS-30Wx18Dx54-9/16"H
	PBF	1	S7P/1520MPBF	7SF MOBILE PED-PEN/BOX/FILE-20" NOMINAL DEPTH
	C-3	1	TLNAP	TORSION FOUR-LEG CHAIR,ARMLESS,POLY SEAT/BACK
	LB	1	SWLB.48	WALL-MOUNTED LOADBAR, 48W
	TB/TR	1	PTBO.4820	OVERHEAD TACKBOARD, 20Hx48W
			FWTRO.4820	TOOL RAIL W/ ACCESSORIES KIT, 20Hx48W

PROJECT RECORD DRAWINGS
6/16/2011
CONTRACTOR: JOHNSTONE MOYER INC.

JOB NO. 2008-090.01
PAGE ADD-1D
DRAWN:
SCALE: NTS
DATE: 1/8"=1'-0"

CONTRA COSTA COLLEGE
APPLIED ARTS REMODEL
2600 MISSION BELL DR.
SAN PABLO, CA.

REVISION	DESCRIPTION WITH DATE AND NAME:
1	ADDENDUM NO. 1

INTERACTIVE RESOURCES
ARCHITECTURE • PLANNING • ENGINEERING
117 PARK PLACE
POINT RICHMOND
CALIFORNIA 94801
(510) 236-7435
(FAX) 232-5325
http://www.intres.com

C:\Users\Mike Mahoney\Desktop\Contra Costa Fine Arts Remodel - CAD Work 5-11\CAD files\Addendum 1\Addendum 1\ADD-1B-1E.dwg 6/23/2011 3:57 PM Mike Mahoney

KI FURNITURE LEGEND

ROOM 252K	**ITEM**	**QTY**	**MODEL NUMBER/OPTIONS**	**DESCRIPTION**
	T-2	3	DM24F-74P	DLMP FXD LEG,RECT,T BASE,74P EDGE,24x48"
	C-3	2	TLNAP	TORSION FOUR-LEG CHAIR,ARMLESS,POLY SEAT/BACK
ROOM 252L	**ITEM**	**QTY**	**MODEL NUMBER/OPTIONS**	**DESCRIPTION**
	C-2	2	ENGP/AA	ENGAGE ADJ ARMCHAIR,ADJ & PIVOTING ARMS,POLY BACK
			KI62/JR30	IMPRESS TASK CHAIR, PEDESTAL BASE, PIVOT ARMS
			KI74/JR30	IMPRESS ULTRA TASK CHAIR, PEDESTAL BASE, MESH MID-BACK, PIVOT ARMS
	D-1	2	GSTR2472S/CR-74P:PUN:NM:NW	GEN BASIC RECTANGULAR,CRANK HT ADJ,74P EDGE,24x72"W
	BC-1	1	S7B/3651015	7SF BOOKCASE-36Wx54-9/16Hx15"D-3 ADJ SHELVES
	PBF	2	S7P/1520MPBF	7SF MOBILE PED-PEN/BOX/FILE-20" NOMINAL DEPTH
	C-3	2	TLNAP	TORSION FOUR-LEG CHAIR,ARMLESS,POLY SEAT/BACK
ROOM 252	**ITEM**	**QTY**	**MODEL NUMBER/OPTIONS**	**DESCRIPTION**
	T-3	5	DM48F-74P	DLMP FXD LEG,RECT,TT BASE,74P EDGE,48x96"
	BC-1	1	S7B/3651015	7SF BOOKCASE-36Wx54-9/16Hx15"D-3 ADJ SHELVES
	LF-4	2	S7L/423603D	7SF LAT. FILE,3H-W/FRONT-TO-BACK FOLDER BARS, 42Wx18Dx39-1/4"H
	FT84	1	S7L/8418T-74P	7SF FILE TOP 18x84 PVC EDGE FOR SIDE BY SIDE UNITS
	C-3	20	TLNAP	TORSION FOUR-LEG CHAIR,ARMLESS,POLY SEAT/BACK
ROOM 253	ITEM	QTY	MODEL NUMBER/OPTIONS	DESCRIPTION
	BC-1	1	S7B/3651015	7SF BOOKCASE-36Wx54-9/16Hx15"D-3 ADJ SHELVES
	FT30	1	S7L/3018T-74P	7SF FILE TOP 18x30 PVC EDGE FOR SIDE BY SIDE UNITS
	CAB1	1	S7L/30240HD	7SF CABINET-1 SHELF-30Wx18Dx27"H
	CAB2	1	S7L/30735HD	7SF CABINET-4 SHELVES-30Wx18Dx77-17/32"
ROOM 254	**ITEM**	**QTY**	**MODEL NUMBER/OPTIONS**	**DESCRIPTION**
	C-3	11	TLNAP	TORSION FOUR-LEG CHAIR,ARMLESS,POLY SEAT/BACK
ROOM 252J	**ITEM**	**QTY**	**MODEL NUMBER/OPTIONS**	**DESCRIPTION**
	OH	2	PRDS48/WW/LB	UNIV. OVRHD w/STEEL DOOR, LOAD BAR MNT,48"W
	TL	2	TLT5.36	OVERHEAD TASK LIGHT,36"W,FOR 42 & 48" OVERHEADS
	C-2	2	ENGP/AA	ENGAGE ADJ ARMCHAIR,ADJ & PIVOTING ARMS,POLY BACK
			KI62/JR30	IMPRESS TASK CHAIR, PEDESTAL BASE, PIVOT ARMS
			KI74/JR30	IMPRESS ULTRA TASK CHAIR, PEDESTAL BASE, MESH MID-BACK, PIVOT ARMS
	SS-4	2	GSSH24724824S/CR-74P:PUN:NM:NW	GEN SQUARE SHOE,CRANK HT ADJ,74P EDGE,24x72x48x24"
	BC-1	2	S7B/3651015	7SF BOOKCASE-36Wx54-9/16Hx15"D-3 ADJ SHELVES
	LF-2	2	S7L/305104D	7SF LAT FILE,4H W/FRONT-TO-BACK FOLDER BARS-30Wx18Dx54-9/16"H
	PBF	2	S7P/1520MPBF	7SF MOBILE PED-PEN/BOX/FILE-20" NOMINAL DEPTH
	C-3	2	TLNAP	TORSION FOUR-LEG CHAIR,ARMLESS,POLY SEAT/BACK
	LB	2	SWLB.48	WALL-MOUNTED LOADBAR, 48W
	TB/TR	2	PTBO.4820	OVERHEAD TACKBOARD, 20Hx48W
			FWTRO.4820	TOOL RAIL W/ ACCESSORIES KIT, 20Hx48W

PROJECT RECORD DRAWINGS
6/16/2011
CONTRACTOR: JOHNSTONE MOYER INC.

JOB NO. 2008-090.01
PAGE
ADD-1E
DRAWN:
SCALE: NTS
DATE:
1/8"=1'-0"

CONTRA COSTA COLLEGE
APPLIED ARTS REMODEL
2600 MISSION BELL DR.
SAN PABLO, CA.

REVISION	DESCRIPTION WITH DATE AND NAME:
1	ADDENDUM NO. 1

INTERACTIVE RESOURCES
ARCHITECTURE • PLANNING • ENGINEERING
117 PARK PLACE
POINT RICHMOND
CALIFORNIA 94801
(510) 236-7455
(FAX) 232-5325
http://www.intres.com

C:\Users\Mike Mahoney\Desktop\Contra Costa Fine Arts Remodel - CAD Work 5-11\CAD files\Addendum 1\Addendum 1\ADD-1B-1E.dwg 6/23/2011 3:57 PM Mike Mahoney

(E) WOMEN 214

(E) CONFERENCE 216

(E) OFFICE 216A

(E) OFFICE 218

(E) OFFICE 220

(E) ELECTRICAL 222

(E) OFFICE 224

(E) OFFICE 226

(E) OFFICE 228

(E) TELEPHONE 230

(E) CORRIDOR 294

(E) X-RAY 206D

(E) DISPATCH 206C

(E) DARKROOM 206E

(E) STAIR-2 -

(E) OFFICE 236

(E) OFFICE 234

(E) OFFICE 232

(E) CORRIDOR 293

WOMEN 233

MEN 235

(E) CUSTODIAN 231

(E) WOMEN 237C

(E) MEN 237B

LOCKERS 237D

(E) OFFICE 237A

(E) COLD STORAGE 237G

(E) FREEZER 237K

(E) COLD STORAGE 237H

(E) CUSTODIAN 237J

REMOVE AND TEMPORARY RELOCATE LOCKERS TO SOUTH SIDE OF CORRIDOR 296 AS DIRECTED BY OWNER, MOVE LOCKERS BACK TO THIS LOCATION AFTER COMPLETION OF PHASE 3 CONSTRUCTION

1

REMOVE (E) DRINKING FOUNTAIN & RE-USE (E) STEEL PIPE WING WALL, PATCH WALL AND FLOOR TO MATCH (E)

1 REMOVE LOCKERS AND PERMANTLY RELOCATE TO CORRIDOR 294, SEE SHEET A2.2

REMOVE CONC SLAB AS NEEDED, TYP.

REMOVE (E) MOP SINK AND FIXURE, REINSTALL AFTER INSTALLATION OF NEW WALL

REMOVE (E) WALL, CONC. CURB, CERAMIC WALL FLOOR TILE, LAVATORIES, COUNTER, TOILET PARTITION, DOOR AND FIXTURES

30"X48" CLR SPACE

COURTYARD BELOW (OPEN)

(N) ACCESSIBLE LOCKER SEE SPEC.

2'-0"

2

1 PARTIAL SECOND FLOOR DEMO PLAN

SCALE: 1/8"=1'-0"

PROJECT RECORD DRAWINGS 6/16/2011

CONTRACTOR: JOHNSTONE MOYER INC.

JOB NO. 2008-090.01
PAGE
DRAWN:
SCALE: NTS
DATE: 1/8"=1'-0"

ADD-1F

CONTRA COSTA COLLEGE

APPLIED ARTS REMODEL
2600 MISSION BELL DR.
SAN PABLO, CA.

REVISION	DESCRIPTION WITH DATE AND NAME:
1	ADDENDUM NO. 1

INTERACTIVE RESOURCES
ARCHITECTURE • PLANNING • ENGINEERING
117 PARK PLACE
POINT RICHMOND
CALIFORNIA 94801
(510) 232-7345
(FAX) 232-5325
http://www.intres.com

C:\Users\Mike Mahoney\Desktop\Contra Costa Fine Arts Remodel - CAD Work 5-11\CAD files\Addendum 1\Addendum 1\ADD-1F.dwg 6/23/2011 3:18 PM Mike Mahoney

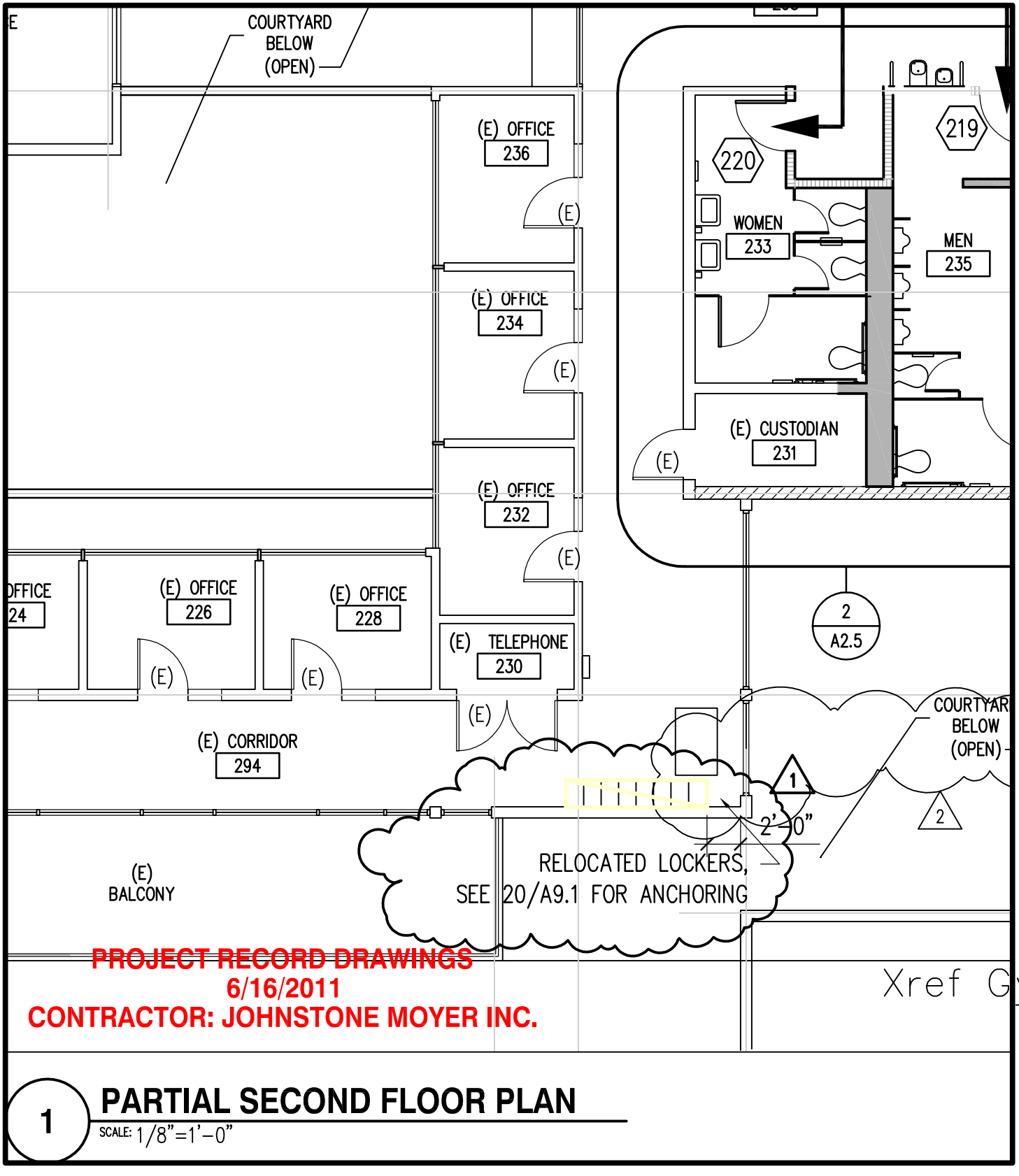

PROJECT RECORD DRAWINGS
6/16/2011
CONTRACTOR: JOHNSTONE MOYER INC.

Xref G

1 PARTIAL SECOND FLOOR PLAN

SCALE: 1/8"=1'-0"

INTERACTIVE RESOURCES
ARCHITECTURE • PLANNING • ENGINEERING
117 PARK PLACE
POINT RICHMOND
CALIFORNIA 94801
(510) 236-7435
(FAX) 232-5325
http://www.intres.com

CONTRA COSTA COLLEGE
APPLIED ARTS REMODEL

2600 MISSION BELL DR.
SAN PABLO, CA.

REVISION	DESCRIPTION WITH DATE AND NAME:
1	ADDENDUM NO. 1

APPLICATION NO. 01-110821
FILE NO. 7-C1
DRAWN:
SCALE: 1/8"=1'-0"
DATE: 12/23/09
IR PROJECT NO. 2008-090..01
PAGE **ADD-1G**

C:\Users\Mike Mahoney\Desktop\Contra Costa Fine Arts Remodel - CAD Work 5-11\CAD files\Addendum 1\Addendum 1\ADD-1G.dwg 6/23/2011 3:20 PM Mike Mahoney

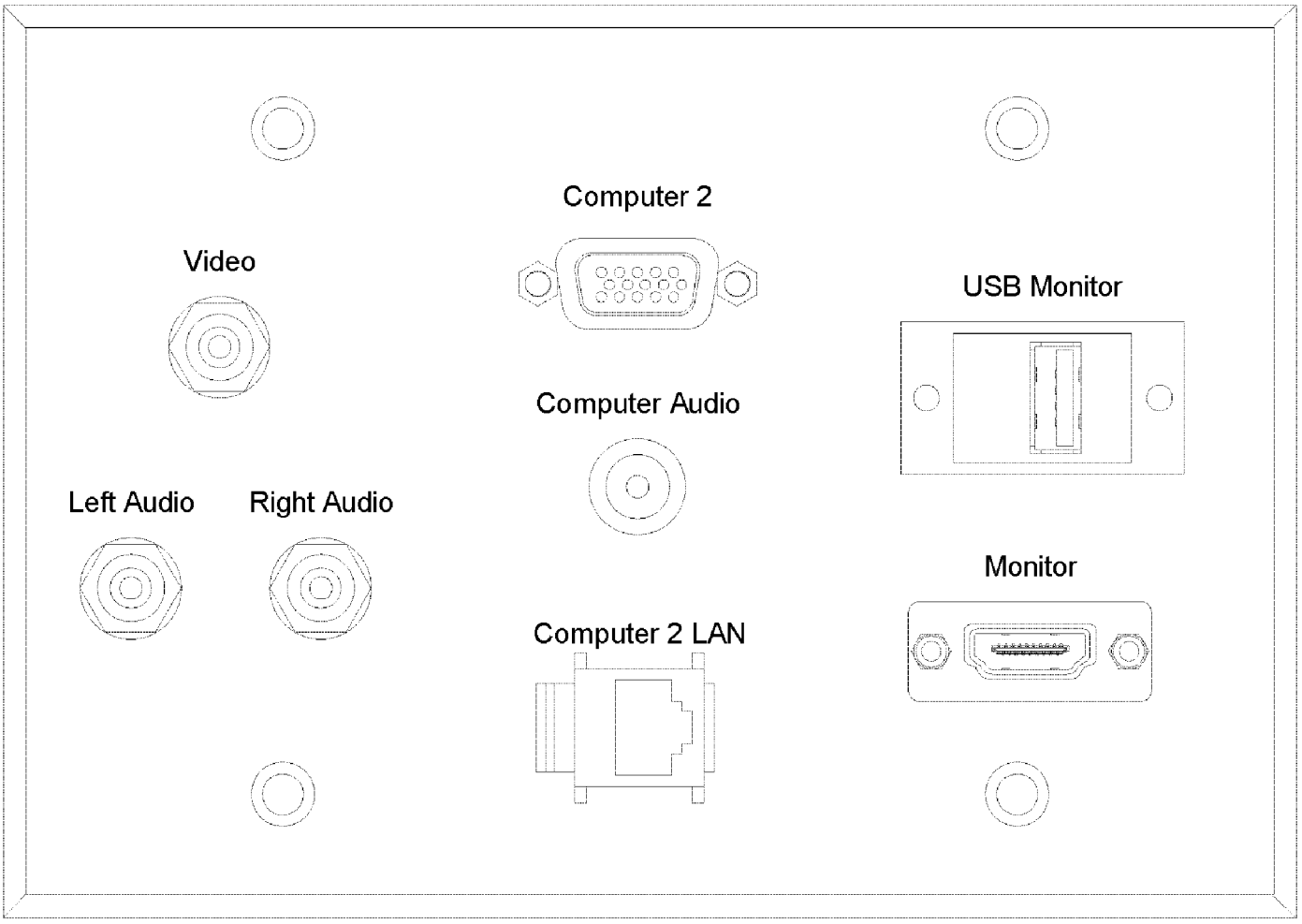

PROJECT RECORD DRAWINGS
6/16/2011
CONTRACTOR: JOHNSTONE MOYER INC.

1 AV PLATE ELEVATION

SCALE: NTS

INTERACTIVE RESOURCES
ARCHITECTURE • PLANNING • ENGINEERING
117 PARK PLACE
POINT RICHMOND
CALIFORNIA 94801
(510) 236-7435
(FAX) 232-5325
http://www.intres.com

CONTRA COSTA COLLEGE
APPLIED ARTS REMODEL

2600 MISSION BELL DR.
SAN PABLO, CA.

REVISION	DESCRIPTION WITH DATE AND NAME:
1	ADDENDUM NO. 1

APPLICATION NO. 01-110821
FILE NO. 7-C1
DRAWN:
SCALE:
DATE: 01/04/10

IR PROJECT NO. 2008-090..01
PAGE **ADD-1H**

C:\Users\Mike Mahoney\Desktop\Contra Costa Fine Arts Remodel - CAD Work 5-11\CAD files\Addendum 1\Addendum 1\ADD-1H.dwg 6/23/2011 3:39 PM Mike Mahoney

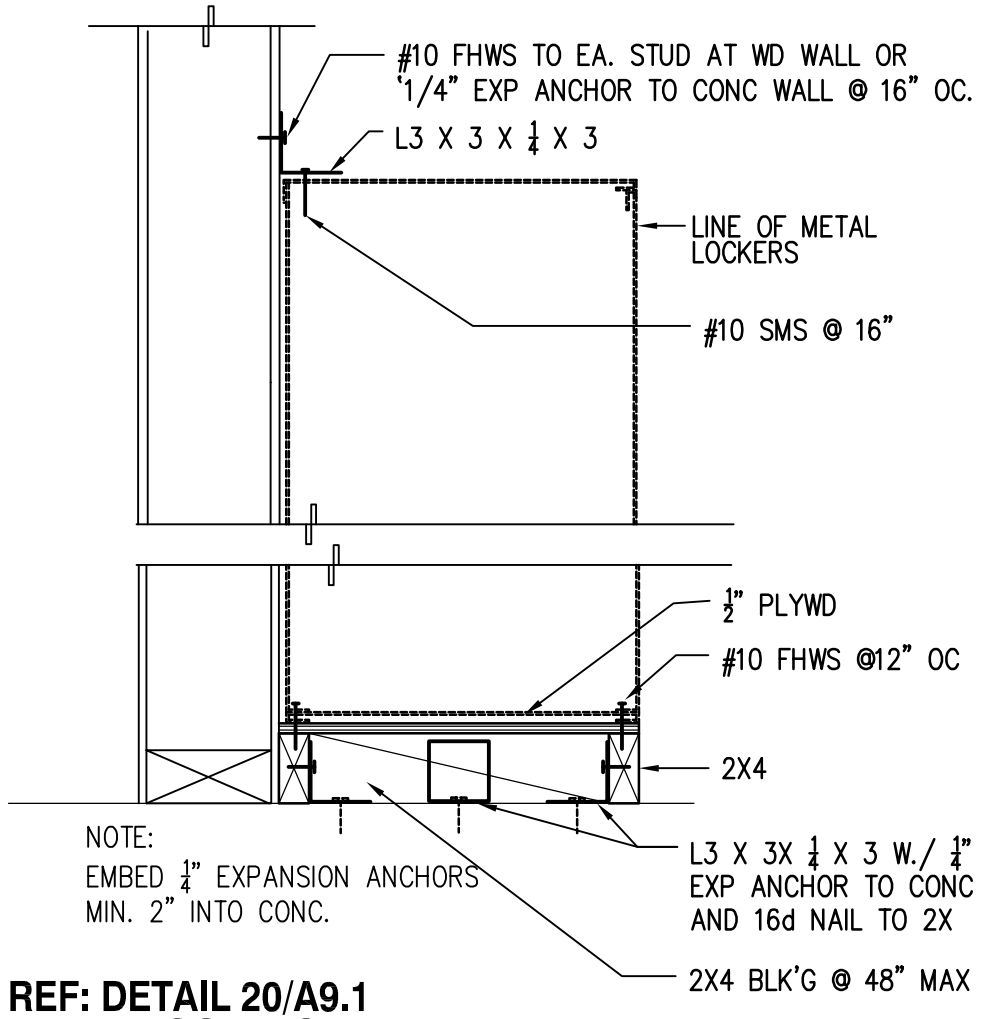

REF: DETAIL 20/A9.1
METAL LOCKERS

SCALE: NONE

\CAD\details\

PROJECT RECORD DRAWINGS
6/16/2011
CONTRACTOR: JOHNSTONE MOYER INC.

INTERACTIVE RESOURCES
ARCHITECTURE • PLANNING • ENGINEERING
117 PARK PLACE
POINT RICHMOND
CALIFORNIA 94801
(510) 236-7435
(FAX) 232-5325
http://www.intres.com

CONTRA COSTA COLLEGE
APPLIED ARTS REMODEL

2600 MISSION BELL DR.
SAN PABLO, CA.

REVISION	DESCRIPTION WITH DATE AND NAME:
1	ADDENDUM NO. 1

APPLICATION NO. 01-110821
FILE NO. 7-C1
DRAWN:
SCALE:
DATE: 12/23/09

IR PROJECT NO. 2008-090..01
PAGE **ADD-1J**

C:\Users\Mike Mahoney\Desktop\Contra Costa Fine Arts Remodel - CAD Work 5-11\CAD files\Addendum 1\Addendum 1\ADD_1J.dwg 6/23/2011 3:27 PM Mike Mahoney

C:\Users\Mike Mahoney\Desktop\Contra Costa Fine Arts Remodel - CAD Work 5-11\CAD Files\Addendum 1\Addendum 1\ADD-2B.dwg 6/23/2011 3:24 PM Mike Mahoney

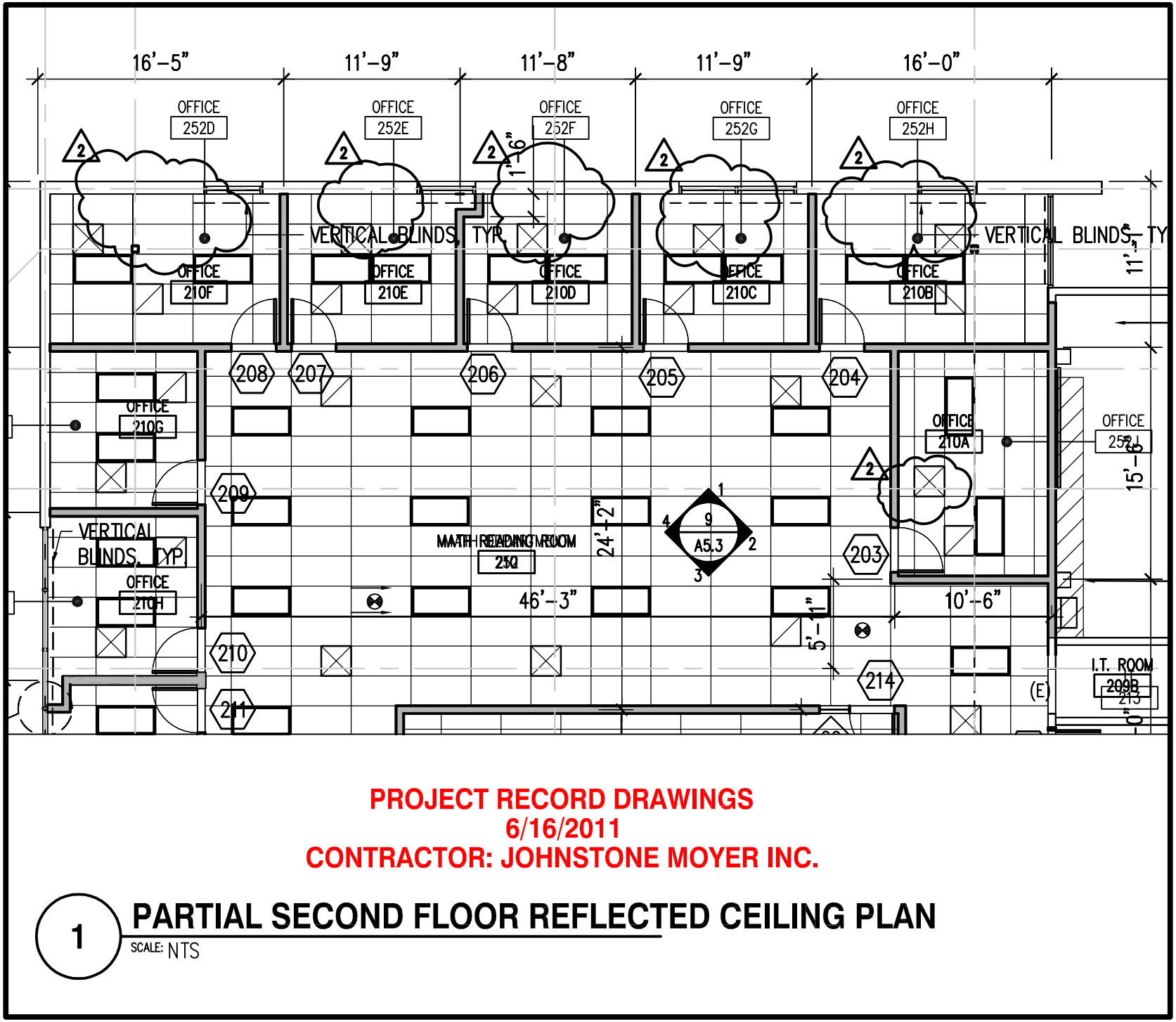

PROJECT RECORD DRAWINGS
6/16/2011
CONTRACTOR: JOHNSTONE MOYER INC.

1 **PARTIAL SECOND FLOOR REFLECTED CEILING PLAN**
SCALE: NTS

IR PROJECT NO.	2008-090..01
PAGE	ADD-2B
APPLICATION NO.	01-110821
FILE NO.	7-C1
DRAWN:	
SCALE:	
DATE:	01/07/10

CONTRA COSTA COLLEGE
APPLIED ARTS REMODEL
2600 MISSION BELL DR.
SAN PABLO, CA.

REVISION	DESCRIPTION WITH DATE AND NAME:
2	ADDENDUM NO. 2

INTERACTIVE RESOURCES
ARCHITECTURE • PLANNING • ENGINEERING
117 PARK PLACE
POINT RICHMOND
CALIFORNIA 94801
(510) 236-7435
(FAX) 232-5325
http://www.intres.com

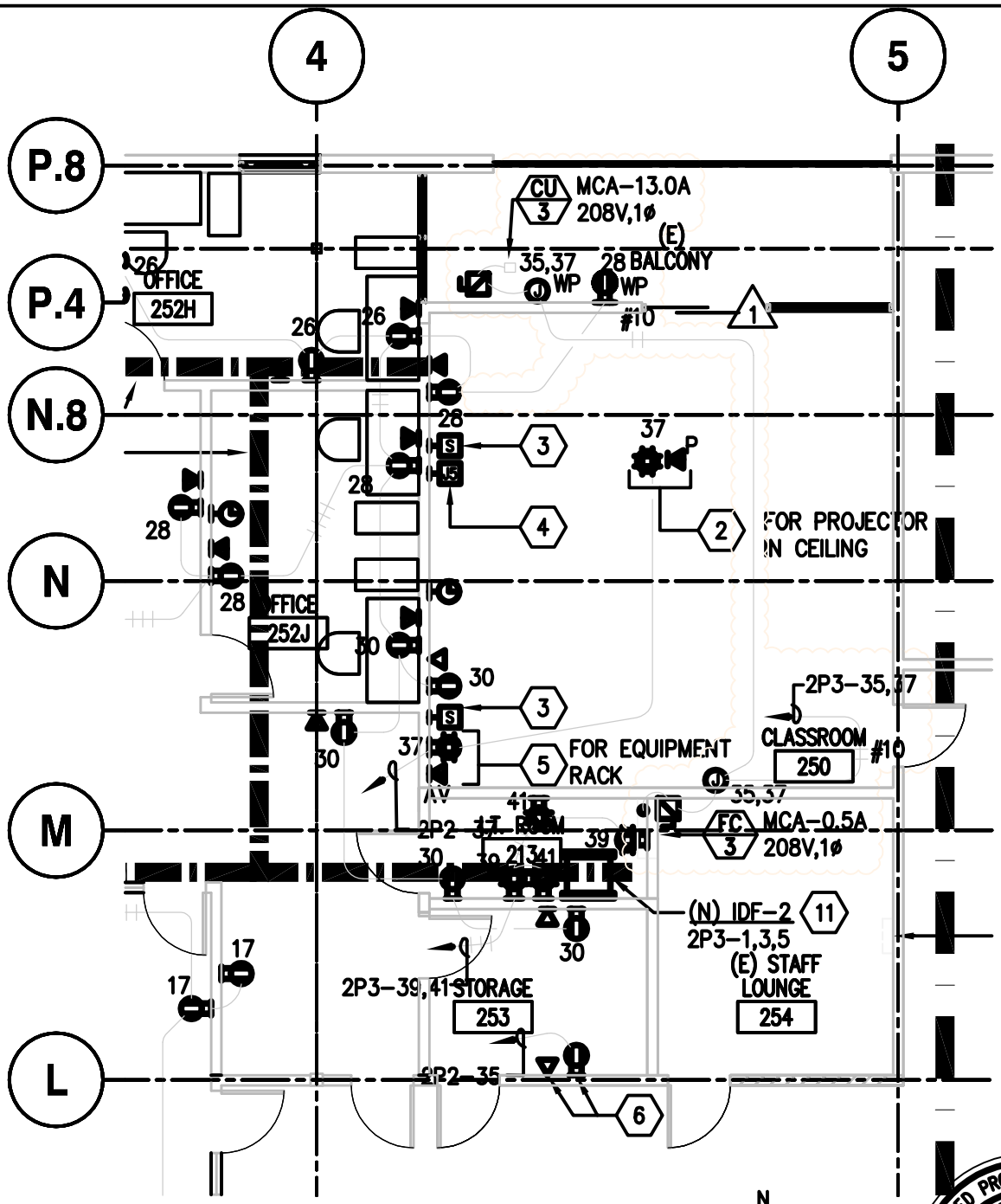

1 ELECTRICAL SECOND FLOOR POWER AND SIGNAL PLAN

SCALE: 1/8" = 1'-0"

PROJECT RECORD DRAWINGS
6/16/2011
CONTRACTOR: GRAY ELECTRIC

REGISTERED PROFESSIONAL ENGINEER
JOSE L. ME
No. E 17369
Exp. 9-30-10
ELECTRICAL
STATE OF CALIFORNIA

REFERENCE SHEET E3.2

WHM INC. 1605 SCHOOL ST., MORAGA, CA. 94556 (925) 376-2902 cad@whminc.com WHM JOB #09-010

06/23/11 3:32:12 PM C:\USERS\MIKE MAHONEY\DESKTOP\CONTRA COSTA FINE ARTS REMODEL - CAD WORK 5-11\CAD FILES\ADDE

INTERACTIVE RESOURCES
ARCHITECTURE • PLANNING • ENGINEERING
117 PARK PLACE
POINT RICHMOND
CALIFORNIA 94801
(510) 236-7435
(FAX) 232-5325
http://www.intres.com

CONTRA COSTA COLLEGE
APPLIED ARTS REMODEL

2600 MISSION BELL DR.
SAN PABLO, CA.

REVISION	DESCRIPTION WITH DATE AND NAME:
1	ADDENDUM NO. 1

APPLICATION NO. 01-110821	IR PROJECT NO. 2008-090..01
FILE NO. 7-C1	PAGE ADD-2L-R
DRAWN: DM/JWE	
SCALE: AS NOTED	
DATE: 01-07-10	