C-4008 APPLIED ARTS & ADMINISTRATION RENOVATION

CONTRA COSTA COLLEGE

26OO MISSION BELL DRIVE, SAN PABLO, CALIFORNIA

CONTRA COSTA COMMUNITY COLLEGE DISTRICT

PROJECT SITE

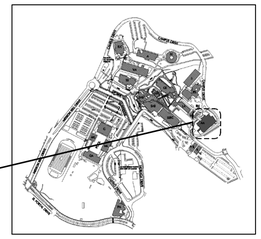

SITE MAP

PROJECT SITE

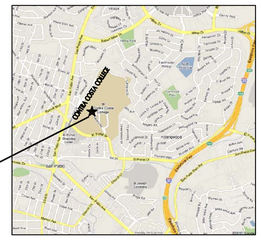

VICINITY MAP

CONTRA COSTA COLLEGE

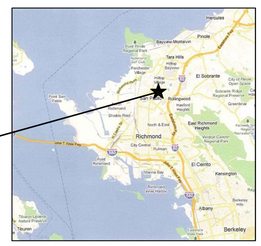

SAN PABLO, CA.

RECORD SET

APRIL 20, 2019

tBP/Architecture

1777 Oakland Boulevard, Suite 320, Walnut Creek, CA 94596
http://www.tbparchitecture.com - email: info@tbparchitecture.com
ph: 925.246.6419

Architecture
Planning
Interiors
Management

tBP
architecture
planning
interiors

tBP/Architecture
1777 Oakland Boulevard, Suite 320
Walnut Creek, CA 94596
ph: 925.246.6419

architect

consultant

IDENTIFICATION STAMP
DIV. OF THE STATE ARCHITECT
OFFICE OF REGULATION SERVICES
APPL # 01-110617
FILE NO. 7-C1
AC ____ KS ____ SS ____
DATE ____

DIVISION OF THE STATE ARCHITECT
1515 CLAY STREET
OAKLAND, CA94612
ph:(510) 622-3101

agency

C-4008 APPLIED ARTS & ADMIN RENOVATION
2600 MISSION BELL DRIVE, SAN PABLO, CA 94806

CONTRA COSTA COMMUNITY COLLEGE DISTRICT
500 COURT STREET MARTINEZ, CA 94553

owner

tBP project number:	20865.00
file name:	A000 Cover.dwg
drawn by:	checked by:
date:	APRIL 20, 2019

rev:	date:	description:
	8/17/2017	BID SET
	04/20/2019	RECORD SET

THIS DRAWING AND THE DESIGNS, DEFINITIONS, IDEAS AND OTHER INFORMATION CONTAINED HEREIN CONSTITUTE UNPUBLISHED WORK OF tBP/ARCHITECTURE AND SHALL REMAIN PROPERTY OF tBP/ARCHITECTURE IN PERPETUITY. NO PART THEREOF SHALL BE REPRODUCED, PUBLISHED, DISTRIBUTED, SOLD, PUBLISHED OR OTHERWISE USED IN ANY WAY WITHOUT THE ADVANCED EXPRESS WRITTEN CONSENT OF tBP/ARCHITECTURE.

drawing title:
COVER SHEET

drawing no.:
A000

drawing of

Record Dwgs

ABBREVIATIONS

AB	ANCHOR BOLT	ENCL.	ENCLOSURE	M	METER	S	SEAL
AC	ASPHALTIC CONCRETE	ENG	ENGINEER	MAINT	MAINTENANCE	S.A.F.F	SELF ADHERED FLEXIBLE FLASHING
ACOUS	ACOUSTICAL	ENGY	ENERGY	MAMF	MATCH ADJ. MTL. FRAME	S.A.F.F.H.T.	SELF ADHERED FLEXIBLE FLASHING - HIGH TEMP
ACP	ACOUSTICAL CEILING PANEL	ENTR	ENTRANCE	MAN	MANUAL	S.B.	SPLASH BLOCK
ACT	ACOUSTICAL TILE	EOD	EDGE OF DECK	MAS	MASONRY	S.C.	CONCRETE WITH SEALER
AD	AREA DRAIN	EP	EPOXY PAINT	MASD	MATCH ADJ. STAIN DOORS	SCHED.	SCHEDULE
ADH	ADHESIVE	EPG	EPOXY PAINT GLOSS	MATL.	MATERIAL	S.C.N.	SOLID CORE NATURAL FINISH
ADJ	ADJACENT	EPSG	EPOXY PAINT SEMI-GLOSS	MAWC	MATCH ADJ. WALL COLOR	S.C.P.	SOLID CORE PAINT FINISH
AFF	ABOVE FINISH FLOOR	EQ.	EQUAL	MAX.	MAXIMUM	S.C.P.L.	SOLID CORE PLASTIC LAMINATE
AFP	ACCORDIAN FOLDING PARTITION	EQUIP.	EQUIPMENT	M.C.	MEDICINE CABINET	S.C.S.	SOLID CORE STAIN FINISH
AGGR	AGGREGATE	EST.	ESTIMATE	MCC	MOTOR CONTROL CENTER	S.D.	STORM DRAIN
ALT	ALTERNATE	E.W.C.	ELECTRIC WATER COOLER	ME	MATCH EXISTING	SECT.	SECTION
ALUM	ALUMINUM	EWH	ELECTRIC WATER HEATER	MECH.	MECHANICAL	SF	STAIN FINISH
AMP	AMPERE	EXH	EXHAUST	MED	MEDIUM	SFL	STAIN FINISH W/ LACQUER
ANOD	ANODIZED	EXIST.	EXISTING	MEZZ	MEZZANINE	SFV	STAIN FINISH W/ VARNISH
AP	ACOUSTICAL PANEL	EXP.	EXPANSION	MFR.	MANUFACTURER	SG	SOUND GASKET
APPROX	APPROXIMATELY	EXPSD.	EXPOSED	MH	MAGNETIC HOLD	SHT.	SHEET
ARCH	ARCHITECT	EXT.	EXTERIOR	MIN.	MINIMUM	SIM.	SIMILAR
ASB	ASBESTOS			MIR	MIRROR	SLR	SEALER
ASSY	ASSEMBLY	F	FACTORY FINISH	MISC.	MISCELLANEOUS	SPEC.	SPECIFICATIONS
AUTO	AUTO ASST DOOR W/ PUSH PLATE	F.A.	FIRE ALARM	MKR	MARKER	SPLY	SUPPLY
		FC	FOOTCANDLE	MTL.	METAL	SQ.	SQUARE
BAT	BATTERY	F.D.	FLOOR DRAIN	MTD.	MOUNTED	SR	STEAM RETURN
BBD	BULLETIN BOARD	FDC	FIRE DEPARTMENT CONNECTION	MUL.	MULLION	SS	STEAM SUPPLY
BD	BOARD	FDN	FOUNDATION	MVBL	MOVABLE	SSK.	SERVICE SINK
BF	BLACK FACED INSUL. PANEL	F.E.	FIRE EXTINGUISHER			SST.	STAINLESS STEEL
BLDG	BUILDING	F.E.C.	FIRE EXTINGUISHER CABINET	N.	NORTH	ST	STREET
BLKG	BLOCKING	FFP	FOLDING FABRIC PARTITION	N/A	NOT APPLICABLE	STAG	STAGGERED
BLO	BLOWER	FG	FIRE-RATED GLAZING	NAT.	NATURAL	STC	SOUND TRANSMISSION CLASS
BLR	BOILER	F.H.	FIRE HYDRANT	NEG	NEGATIVE	STD.	STANDARD
BLW	BELOW	FIN.	FINISH	N.I.C.	NOISE ISOLATION CLASS	STL.	STEEL
BM	BEAM	FLASH.	FLASHING	NO.	NUMBER	STM	STEAM
BO	BOTTOM OF	FLR.	FLOOR	NOM.	NOMINAL	STOR	STORAGE
BOM	BOTTOM OF MULLION	FLUOR.	FLUORESCENT	N.T.S.	NOT TO SCALE	STRUCT.	STRUCTURAL
BRKR	BREAKER	F.O.	FACE OF			SURF	SURFACE
BTU	BRITISH THERMAL UNIT	FOS	FACE OF STUD	O.A.	OVERALL	SUSP.	SUSPENDED
BUR	BUILT UP ROOF	FPP	FOLDING PANEL PARTITION	OBS.	OBSCURE	SWBD	SWITCHBOARD
		FPW	FOLDING PANEL WOOD DOOR	O.C.	ON CENTER	SWGR	SWITCHGEAR
C	CARPET TILE	F.R.A.	FIRE RATED ASSEMBLY	O.D.	OUTSIDE DIAMETER	SWR	SEWER
CA	CARD ACCESS SYSTEM	F.R.P.	FIBERGLASS REINFORCED PANEL	O.F.	OVERFLOW DRAIN	SYM.	SYMBOL
CAB	CABINET	F.S.	FLOOR SINK	OFCI	OWNER FURNISHED-CONTRACTOR INSTALLED	SYS	SYSTEM
CARP	CARPET	FT.	FOOT OR FEET	OFF	OFFICE		
CAT	CATALOG	FTG.	FOOTING	OFOI	OWNER FURNISHED-OWNER INSTALLED	T.	TEMPERED
CB	CATCH BASIN	FURR.	FURRING	OPNG.	OPENING	T. & B.	TOP AND BOTTOM
CEM	CEMENT	FXTR	FIXTURE	OPP.	OPPOSITE	T. & G.	TONGUE AND GROOVE
CF	CURB FACE			OVHD	OVERHEAD	TD	TRENCH DRAIN
CFM	CUBIC FEET PER MINUTE	G.	GAS			TECH	TECHNICAL
CHBD	CHALKBOARD	GA.	GAGE	PART.	PARTITION	TEL.	TELEPHONE
CHEM	CHEMICAL	GALV.	GALVANIZED	PB	PULL BOX	TEMP.	TEMPERATURE
CHWR	CHILLED WATER RETURN	GB	GYPSUM BOARD CEILING	PBD	PARTICLEBOARD	THK	THICK
CHWS	CHILLED WATER SUPPLY	GL.	GLASS	PC	PORTLAND CEMENT	THRES.	THRESHOLD
CI	CAST IRON	GLU.LAM.	GLUE LAMINATED			THRU	THROUGH
CIR	CIRCLE	GND.	GROUND	PERF	PERFORATED	TKBD	TACKBOARD
CJ	CONTROL JOINT	GPM	GALLONS PER MINUTE	PERP	PERPENDICULAR	T.O.	TOP OF
CL	CENTERLINE	GR.	GRADE	PES	PAINT EGGSHELL	T.O.M.	TOP OF MULLION
CLG	CEILING	GYP.	GYPSUM	PF	PAINT FLAT	TOT	TOTAL
CLO	CLOSET			PG	PAINT GLOSS	TR.	TREAD
CLRM	CLASSROOM	H.B.	HOSE BIB	PH	EMERGENCY EGRESS HARDWARE	TRNSF.	TRANSFORMER
CMT	CERAMIC MOSAIC TILE	HCN	HOLLOW CORE NATURAL FINISH	PIV	POST INDICATOR VALVE	TYP.	TYPICAL
CMU	CONCRETE MASONRY UNIT	HCP	HOLLOW CORE PAINT FINISH	PL	PROPERTY LINE		
CND	CONDUIT	HDBD.	HARDBOARD	PLAS.	PLASTER	U	HEAT TRANSFER COEFFICIENT
CO	CLEANOUT	HDR	HEADER	PLAT.	PLATFORM	UC	UNDERCUT DOOR
COL	COLUMN	HDW.	HARDWARE	PLBG	PLUMBING	UGND	UNDERGROUND
COMM	COMMUNICATION	HDWD.	HARDWOOD	PLF	POUNDS PER LINEAR FOOT	UNFIN.	UNFINISHED
COMP	COMPOSITION	HGT.	HEIGHT	PLYWD.	PLYWOOD	U.N.O.	UNLESS NOTED OTHERWISE
CONC	CONCRETE	H.M.	HOLLOW METAL	PNL	PANEL	UPG	URETHANE PAINT GLOSS
CONF	CONFERENCE	HORIZ.	HORIZONTAL	POS	POSITIVE	UPSG	URETHANE PAINT SEMI-GLOSS
CONN	CONNECTION	HP	HORSEPOWER	PP	PORTABLE PARTITION	UR.	URINAL
CONT	CONTINUOUS	HR.	HOUR	PR.	PAIR	UTIL	UTILITY
CONTR	CONTRACTOR	HSTAT	HUMIDISTAT	PREFAB	PREFABRICATED		
COORD	COORDINATE	HTG.	HEATING	PREFIN	PREFINISHED	V	VOLT
CORR	CORRIDOR	HTWR	HOT WATER RETURN	PRELIM	PRELIMINARY	VAC	VACUUM
COV	COVER	HTWS	HOT WATER SUPPLY	PROJ	PROJECT	VAV	VARIABLE AIR VOLUME
CP	CONTROL PANEL	HVAC	HEATING, VENTILATING, AIR CONDITIONING	PS	PREFINISHED STEEL	V.C.T.	VINYL COMPOSITION TILE
CR	CONDENSATE RETURN			PSF	POUNDS PER SQUARE FOOT	VERT.	VERTICAL
CS	CONCRETE - SEALED	HVY	HEAVY	PSG	PAINT SEMI-GLOSS	VEST.	VESTIBULE
CSWK	CASEWORK	HW	HOT WATER	PSI	POUNDS PER SQUARE INCH	VF	VARNISH
CT	CERAMIC TILE			PVC	POLYVINYL CHLORIDE		
CTV	CABLE TELEVISION	I.D.	INSIDE DIAMETER			W	WATT
CW	COLD WATER	INSUL.	INSULATION	Q.T.	QUARRY TILE	W/	WITH
		INT.	INTERIOR	QTY	QUANTITY	W.C.	WATER CLOSET
DBL	DOUBLE	INV.	INVERT			WD.	WOOD
DEMO	DEMOLITION	IW	IRRIGATION WATER	R.	THERMAL RESISTANCE	WDW.	WINDOW
DEPT	DEPARTMENT			RAD.	RADIUS	WHSE	WAREHOUSE
DET	DETAIL	JAN.	JANITOR	R.D.	ROOF DRAIN	WL	WIND LOAD
DF	DRINKING FOUNTAIN	JCT.	JUNCTION	RDWD.	REDWOOD	W.O.	WHERE OCCURS
DIA	DIAMETER	JT.	JOINT	REF.	REFERENCE	WLD	WELDED
DIM	DIMENSION			REFR.	REFRIGERATOR	WP	WORKING POINT
DISP.	DISPENSER	K	KIP (1000 LB)	REG.	REGISTER	WPG	WATERPROOFING
DIST.	DISTANCE	KIT.	KITCHEN	REINF.	REINFORCING	WR	WATER RESISTANT
DIV.	DIVISION	KO	KNOCKOUT	REQD.	REQUIRED	WSCT.	WAINSCOT
D.L.	DEAD LOAD	KVA	KILOVOLT AMPERE	RESIL.	RESILIENT	WT	WEIGHT
DN.	DOWN			RET	RETURN	W.W.F.	WELDED WIRE FABRIC
DS.	DOWN SPOUT	LAB.	LABORATORY	REV.	REVERSE		
DWG.	DRAWING	LAQ.	LAQUER FINISH	RFG	ROOFING	XC	EXISTING OPEN CEILING
		LAV.	LAVATORY	RM.	ROOM	XFMR	TRANSFORMER
(E)	EXISTING	LB.	POUND	R.O.	ROUGH OPENING		
EA.	EACH	LDG	LANDING				
EC	ELECTRIFIED CLOSER	LL	LIVE LOAD				
EL	EASEMENT LINE	LT	LIGHT				
E.J.	EXPANSION JOINT	LTG	LIGHTING				
ELEC.	ELECTRICAL	LVL	LEVEL				
ELEV.	ELEVATION	LVR	LOUVER				
EMER.	EMERGENCY						

REFERENCE SYMBOLS

FULL BUILDING SECTION
A / A-4 — LETTER ABOVE - SECTION; NUMBER BELOW - SHEET NUMBER

PARTIAL BUILDING SECTION / WALL SECTION
B / A-4 — LETTER ABOVE - SECTION; NUMBER BELOW - SHEET NUMBER

EXTERIOR ELEVATION
1 / A-3 — NUMBER ABOVE - ELEVATION NUMBER; NUMBER BELOW - SHEET NUMBER

DETAIL
2 / 3.01 — NUMBER ABOVE - DETAIL NUMBER; NUMBER BELOW - SHEET NUMBER

ROOM IDENTIFICATION WITH INTERIOR ELEVATION REFERENCES
NUMBER ABOVE - ROOM NUMBER; * DENOTE ENLARGED FLOOR PLAN; INTERIOR ELEVATION - (REFERENCE ONLY THOSE DRAWN); NUMBER BELOW - SHEET NUMBER

ENLARGED PLAN / SECT. /DET.
2 / 3.01 — NUMBER ABOVE - DETAIL NUMBER; NUMBER BELOW - SHEET NUMBER

REVISION IDENTIFICATION

REFERENCE POINT

DIMENSION REFERENCE
DIMENSION TO FACE OF FINISH, TYPICAL U.O.N.; DIMENSION TO CENTERLINE OR TO REFERENCE GRID LINE.

NOTE :
WHEN A DASH (-) OR BLANK ( ) OCCURS IN A SYMBOL SPACE IT INDICATES THAT THE NUMBER IN THAT SPACE SHALL BE THE NUMBER OF THE SHEET ON WHICH THE SYMBOL OCCURS.

INTERIOR ELEVATION IDENTIFICATION
101 2 — NUMBER ABOVE - ROOM NUMBER; INTERIOR ELEVATION REFERENCE

DOOR NUMBER IDENTIFICATION
101 — DOOR NUMBER - REFER TO DOOR SCHEDULE

WINDOW TYPE IDENTIFICATION
A — WINDOW TYPE - REFER TO WINDOW DETAILS

CASEWORK IDENTIFICATION SEE SHEET A971
CASE HEIGHT 34 — 24 CASE DEPTH; 202 W.I.C. MODEL NUMBER; CASE LENGTH 48 — LOCKABLE - IF REQUIRED

KEYNOTE REFERENCE
KEYNOTE REFERENCE NUMBER

WALL TYPE REFERENCE
A — REFER TO DETAIL 10/ A841

FINISH SYMBOL
SS2 — FINISH MATERIAL AS NOTED ON FINISH LEGEND

APPLICABLE CODES

1. 2016 EDITION OF TITLE 24 (CALIFORNIA BUILDING STANDARDS CODE) OF THE CALIFORNIA CODE OF REGULATIONS (CCR) AND THE LATEST SUPPLEMENTS:

   PART 01 CALIFORNIA STANDARDS BUILDING ADMINISTRATIVE CODE (CAC)
   PART 02 CALIFORNIA BUILDING CODE (CBC)
   PART 03 CALIFORNIA ELECTRICAL CODE (CEC)
   PART 04 CALIFORNIA MECHANICAL CODE (CMC)
   PART 05 CALIFORNIA PLUMBING CODE (CPC)
   PART 06 CALIFORNIA ENERGY CODE
   PART 09 CALIFORNIA FIRE CODE (CFC)
   PART 11 CALIFORNIA GREEN BUILDING STANDARDS CODE CALGREEN CODE)
   PART 12 CALIFORNIA REFERENCE STANDARDS CODE

2. STATE OF CALIFORNIA, TITLE 19, STATE FIRE MARSHAL (SFM) - PUBLIC SAFETY REGULATIONS

3. PARTIAL LIST OF APPLICABLE STANDARDS

NFPA 13	STANDARD FOR THE INSTALLATION OF SPRINKLER SYSTEMS (CA AMENDED)	2016 EDITION
NFPA 14	STANDARD FOR THE INSTALLATION OF STANDPIPE AND HOSE SYSTEMS	2013 EDITION
NFPA 17	STANDARD FOR DRY CHEMICAL EXTINGUISHING SYSTEMS	2013 EDITION
NFPA 17A	STANDARD FOR WET CHEMICAL EXTINGUISHING SYSTEMS	2013 EDITION
NFPA 20	STANDARD FOR THE INSTALLATION OF STATIONARY PUMPS FOR FIRE PROTECTION	2016 EDITION
NFPA 22	STANDARD FOR WATER TANKS FOR PRIVATE FIRE PROTECTION	2013 EDITION
NFPA 24	STANDARD FOR THE INSTALLATION OF PRIVATE FIRE SERVICE MAINS AND THEIR APPURTENANCES	2016 EDITION
NFPA 72	NATIONAL FIRE ALARM AND SIGNALING CODE (CA AMENDED)	2016 EDITION
NFPA 80	STANDARD FOR FIRE DOORS AND OTHER OPENING PROTECTIVES	2016 EDITION
NFPA 2001	STANDARD ON CLEAN AGENT FIRE EXTINGUISHING SYSTEMS	2015 EDITION
UL 300	STANDARD FOR FIRE TESTING OF FIRE EXTINGUISHING SYSTEMS FOR PROTECTION OF COMMERCIAL COOKING EQUIPMENT	2005 (R2010)
UL 464	AUDIBLE SIGNALING DEVICES FOR FIRE ALARM AND SIGNALING SYSTEMS, INCLUDING ACCESSORIES	2003 EDITION
UL 521	STANDARD FOR HEAT DETECTORS FOR FIRE PROTECTIVE SIGNALING SYSTEMS	1999 EDITION
UL 1971	STANDARD FOR SIGNALING DEVICES FOR HEARING IMPAIRED	2002 EDITION
UL 300	STANDARD FOR BLEACHERS, FOLDING AND TELESCOPIC SEATING, AND GRANDSTANDS	2012 EDITION

FOR A COMPLETE LIST OF APPLICABLE NFPA STANDARDS REFER TO 2016T CBC (SFM) CHAPTER 35 AND CALIFORNIA FIRE CODE CHAPTER 80.

SEE CALIFORNIA BUILDING CODE, CHAPTER 35, FOR STATE OF CALIFORNIA AMENDMENTS TO THE NFPA STANDARDS.

4. STATE OF CALIFORNIA, TITLE 8, DEPARTMENT OF INDUSTRIAL RELATIONS, CHAPTER 4 DIVISION OF INDUSTRIAL SAFETY, SUB CHAPTER 6 ELEVATOR SAFETY ORDERS.

2007 ASME A17.1 (W/A17.1a/ CSA B44a-08 ADDENDA) SAFETY CODE FOR ELEVATORS AND ESCALATORS.

SCOPE OF WORK

RENOVATION OF A TWO-STORY, APPLIED ARTS BUILDING , APPROXIMATELY 26,000 GSF.

GENERAL CONFORMANCE

STATEMENT OF GENERAL CONFORMANCE
FOR ARCHITECTS/ ENGINEERS WHO UTILIZE PLANS INCLUDING BUT NOT LIMITED TO SHOP DRAWINGS, PREPARED BY OTHER LICENSED DESIGN PROFESSIONALS AND/OR CONSULTANTS
(Application No. 01-116617 File No. 7-C1)

☒ The drawings or sheets listed on the cover or index sheet as noted with Astrix
☐ This drawing, page or specifications/ calculations

have been prepared by other design professionals or consultants who are licensed and/ or authorized to prepare such drawings in this state. It has been examined by me for:

1. Design intent and appears to meet the appropriate requirements of Title 24, California code of Regulations and the project specifications prepared by me, and
2. coordination with my plans and spcifications and is acceptable for incorporation into the construction of this project.

The Statement of General Conformance shall not be construed as relieving me of my rights, duties and responsibilities under Sections 17302 and 81138 of the Education Code and Sections 4-336, 4-341 and 4-344 of Title 24, Part 1. (Title 24, Part 1, Section 4-317 (b))

I find that:
☒ All drawings or sheets listed on the cover or index sheet
☐ This drawing or page
☒ Is/ are in general conformance with the project design, and
☒ has/ have been coordinated with the project plans and specifications.

Signature   Date

Architect or Engineer designated to be in general responsible charge
Print Name: PHIL NEWSOM
License Nuber: 23270   Exp Date: 10-31-17

ADD ALTERNATES

3a. HEADWALLS AND SIMULATED AIR
3b. CEILING TILE REPLACEMENT AT THE CORRIDOR, LOBBY AND VESTIBULE. @ 2ND FLOOR REPLACE WITH FIRE GUARD RATED CEILING TILE.
3c. PAINT WOOD CEILING PANEL AND WALL PANELS (WHITE WASH) AT THE CORRIDOR, LOBBY AND VESTIBULE
3d. IF HALLWAY 108, 110, 148 IS NOT A RATED CORRIDOR, PROVIDE CORRECTION AS DETAILED
3e. AT CORRIDOR, LOBBY AND VESTIBULE (BOTH FLOOR) REPLACE CEILING PERFORATED REGISTER GRILLS TO MATCH IN KIND.

DRAWING LIST

GENERAL (34)

A000 COVER SHEET
A001 GENERAL NOTES, ABBREVIATIONS & INDEX
A002 SITE PLAN
A021 CODE ANALYSIS

A111 FIRST FLOOR PLAN DEMOLITION
A121 SECOND FLOOR PLAN DEMOLITION
A131 ROOF PLAN DEMOLITION

A141 FIRST FLOOR RCP DEMOLITION
A151 SECOND FLOOR RCP DEMOLITION

A211 FIRST FLOOR PLAN
A221 SECOND FLOOR PLAN
A231 ROOF PLAN
A232 ROOF FRAMING PLAN - STRUCTURAL

A241 FIRST FLOOR RCP
A251 SECOND FLOOR RCP

A261 FIRST FLOOR PLAN - FINISH AND SIGNAGE
A271 SECOND FLOOR PLAN - FINISH AND SIGNAGE

A501 INTERIOR ELEVATIONS
A502 INTERIOR ELEVATIONS

A511 ENLARGED PLANS & ELEVATOR DETAILS

A611 FINISH SCHEDULE
A621 DOOR SCHEDULE & WINDOW SCHEDULE

A813 WINDOW DETAILS

A822 DOOR DETAILS
A841 INTERIOR WALL & PARTITION TYPES
A842 TYP. FRAMING & MISC. DETAILS

A901 TYPICAL WOOD STUD SCHEDULE & DETAILS
A902 TYPICAL METAL STUD SCHEDULE & DETAILS

A911 CEILING DETAILS
A912 CEILING DETAILS
A921 ACOUSTICAL DETAILS
A941 INTERIOR DETAILS
A971 CASEWORK DETAILS
A981 SIGNAGE & MISC. DETAILS

*MECHANICAL DRAWINGS (14)

M0.1 HVAC SCHEDULES, LEGENDS & GENERAL NOTES
M0.2 HVAC SCHEDULES, LEGENDS & GENERAL NOTES
M0.3 TITLE 24 COMPLIANCE FORMS

MD2.1 HVAC FIRST FLOOR DEMO PLAN
MD2.2 HVAC SECOND FLOOR DEMO PLAN
MD2.3 HVAC ROOF DEMO PLAN
MD3.2 HVAC PIPING SECOND FLOOR DEMO PLAN

M2.1 HVAC FIRST FLOOR NEW WORK PLAN
M2.2 HVAC SECOND FLOOR NEW WORK PLAN
M2.3 HVAC NEW WORK ROOF PLAN
M3.2 HVAC PIPING SECOND FLOOR NEW WORK PLAN

M5.1 MECHANICAL DETAILS
M5.2 MECHANICAL DETAILS

M6.1 MECHANICAL CONTROL DIAGRAMS

*PLUMBING DRAWINGS (9)

P0.1 PLUMBING LEGEND, SCHEDULE & NOTES
P0.2 PLUMBING FIXTURE SCHEDULE

PD2.1 PLUMBING - FIRST FLOOR DEMO PLAN
PD2.2 PLUMBING - SECOND FLOOR DEMO PLAN
PD2.3 PLUMBING - ROOF DEMO PLAN

P2.1 PLUMBING - FIRST FLOOR NEW WORK PLAN
P2.2 PLUMBING - SECOND FLOOR NEW WORK PLAN
P2.3 PLUMBING - ROOF NEW WORK PLAN

P5.1 PLUMBING DETAILS

*ELECTRICAL DRAWINGS (26)

E001 ELECTRICAL SYMBOLS, NOTES & SCHEDULES
E002 ELECTRICAL ONE LINE DIAGRAM
E003 ELECTRICAL PANEL SCHEDULES
E004 ELECTRICAL DETAILS
E005 ELECTRICAL DETAILS
E006 ELECTRICAL DETAILS
E007 ELECTRICAL LIGHTING DIAGRAMS
E008 ELECTRICAL TITLE 24 POWER DISTRIBUTION
E009 ELECTRICAL TITLE 24 INTERIOR LIGHTING

E111 ELECTRICAL LIGHTING DEMO PLAN - 1ST FLOOR
E112 ELECTRICAL POWER DEMO PLAN - 1ST FLOOR
E113 ELECTRICAL FIRE ALARM DEMO PLAN - 1ST FLOOR

E121 ELECTRICAL LIGHTING DEMO PLAN - 2ND FLOOR
E122 ELECTRICAL POWER DEMO PLAN - 2ND FLOOR
E123 ELECTRICAL FIRE ALARM DEMO PLAN - 2ND FLOOR

E131 ELECTRICAL POWER DEMO PLAN - ROOF

E211 ELECTRICAL LIGHTING PLAN - 1ST FLOOR
E221 ELECTRICAL LIGHTING PLAN - 2NDFLOOR

E311 ELECTRICAL POWER PLAN - 1ST FLOOR
E321 ELECTRICAL POWER PLAN - 2ND FLOOR
E331 ELECTRICAL POWER PLAN - ROOF

E411 ELECTRICAL FIRE ALARM PLAN - 1ST FLOOR
E421 ELECTRICAL FIRE ALARM PLAN - 2ND FLOOR

E501 FIRE ALARM NOTES, DETAILS & SCHEDULES
E502 FIRE ALARM CALCULATIONS
E503 FIRE ALARM RISER DIAGRAM

TELECOM/ SECURITY DRAWINGS (31)

T0.01 TITLE SHEET
T0.02 PATHWAYS REQUIREMENTS
T0.03 ROUGH-IN SCHEDULE
T0.04 CABLING SCHEDULE
T0.11 DIAGRAM - BACKBONE PATHWAYS
T0.12 DIAGRAM - BACKBONE CABLING
T0.13 DIAGRAM - BONDING RISER
T0.14 DIAGRAM - HORIZONTAL ROUTING
T0.21 DIAGRAM - SECURITY ACAMS
T0.22 DIAGRAM - SECURITY VSS

T0.31 DIAGRAM - AV FUNCTIONAL CLASSROOM TYPE A
T0.32 DIAGRAM - AV FUNCTIONAL NURSING CLASSROOM
T0.33 DIAGRAM - AV FUNCTIONAL SIM LAB/ CONTROL

T2.01 FLOOR PLAN - FIRST FLOOR
T2.02 FLOOR PLAN - SECOND FLOOR
T3.01 REFLECTED CEILING PLAN - FIRST FLOOR
T3.02 REFLECTED CEILING PLAN - SECOND FLOOR
T4.01 ROOM PLAN - GENERAL DATA 117G
T4.02 ROOM PLAN - TELEPHONE 230

T4.11 ROOM PLAN - MATH LAB 202
T4.12 ROOM ELEVATIONS - CLASSROOM 203
T4.13 ROOM PLAN - CLASSROOM 212
T4.13A ROOM PLAN - CLASSROOM 212
T4.14 ROOM PLAN - CLASSROOM 201A
T4.15 ROOM PLAN - CLASSROOM 201B
T4.16 ROOM PLAN - CLASSROOM 239D
T4.17 ROOM PLAN - SIM LAB / CONTROL ROOM

T5.01 INSTALLATION DETAIL - TELECOM
A02 T5.02 LABELING DETAIL
T5.21 INSTALLATION DETAIL - SECURITY CAMERAS
T5.22 INSTALLATION DETAIL - SECURITY DOORS
T5.31 INSTALLATION DETAIL - AUDIOVISUAL

GENERAL STRUCTURAL NOTES

WD CONCRETE MATERIALS

CM-1) CONCRETE STRENGTHS AND WEIGHT (SEE SPECIFICATION SECTION 03 30 00 FOR ADDITIONAL CONCRETE PROPERTIES):

LOCATION	MIN COMPRESSIVE STRENGTH (PSI)	MAX WEIGHT (PCF)	MIN/MAX % CLASS F FLY ASH	MIN/MAX % SLAG	MAX TOTAL % FLY ASH AND SLAG
FOOTINGS / GRADE BEAMS	4000 @ 56 DAYS	145	20-50	0-60	60
SLAB ON GRADE	4000 @ 28 DAYS	145	15-25	0-30	40

CM-2) ALL CONCRETE SHALL BE THOROUGHLY CONSOLIDATED.

CM-3) THE USE OF CALCIUM CHLORIDE AND OTHER CHLORIDE CONTAINING AGENTS IS PROHIBITED. THE USE OF RECYCLED CONCRETE IS PROHIBITED. PLACEMENT WITHIN AND CONTACT BETWEEN ALUMINUM ITEMS, INCLUDING ALUMINUM CONDUIT, AND CONCRETE IS PROHIBITED.

WD WOOD

WD-1) ALL FRAMING LUMBER SHALL BE DOUGLAS FIR, UON. GRADE SHALL BE AS FOLLOWS:

POST, BEAMS, HEADERS: NO. 1
STUDS, PLATES, BLOCKS
LIGHT FRAMING AND MISC: NO. 2

WD-2) ALL LUMBER IN CONTACT WITH CONCRETE OR MASONRY 6;-0" OR LESS ABOVE GROUND SHALL BE PRESSURE TREATED.

WD-3) LUMBER MOISTURE CONTENT: SEE SPECIFICATIONS

WD-4) REJECTION OF WOOD MEMBERS: THE PROVISION IN DOC PS 20 (AS REFERENCED BY CBC 2303.1.1) WHICH PERMITS 5 PERCENT OF THE MATERIAL TO FALL BELOW GRADE SHALL NOT BE CONSTRUED TO PERMIT BELOW-GRADE MATERIAL TO BE USED AS LOAD-CARRYING MEMBERS WHICH HAVE BEEN DESIGNED FOR SPECIFIED ALLOWABLE STRESSES AND ACCEPTABLE SAFETY FACTORS. MATERIALS WHICH FALL BELOW GRADE SHALL BE REJECTED FOR LOAD-CARRYING USE. WOOD MEMBERS WHICH ARE REQUIRED TO CARRY DESIGN LOADS AND WHICH THE PROJECT ARCHITECT ENGINEER OR INSPECTOR JUDGE TO BE MISGRADED SHALL BE REINSPECTED BY A QUALIFIED LUMBER GRADING INSPECTOR TO VERIFY THE PROPER GRADING OF THE MATERIAL. WOOD MEMBERS WHICH HAVE PERMISSIBLE GRADE CHARACTERISTICS OR DEFECTS IN SUCH COMBINATION AS TO AFFECT THE SERVICABLILITY OF THE MEMBER SHALL BE REJECTED BY THE PROJECT INSPECTOR WITH THE CONCURRENCE OF THE ARCHITECT OR STRUCTURAL ENGINEER.

WD-5) STRUCTURAL SHEATHING:

A. ROOF SHEATHING: 15/32" APA RATED SHEATHING 32/16", EXPOSURE 1. PS1-07, 5 PLY PLYWOOD
B. FLOOR SHEATHING: 23/32" APA RATED, STURD-I-FLOOR, 24 OC, T&G, PS1-07
C. WALL SHEATHING: 15/32" APA RATED SHEATHING, EXPOSURE 1, PS1-07, 5 PLY PLYWOOD

WD-6) FRAMING HARDWARE: ASW MANUFACTURED BY SIMPSON CO. OR APPROVED EQUAL SIMPSON DESIGNATIONS USED.

WD-7) NAILS: COMMON WIRE GAGE UON. NAILING TO CONFORM TO CBC TABLE 2304.9.1, UON. USE OF MACHINE NAILING IS SUBJECT TO A SATISFACTORY JOBSITE DEMONSTRATION FOR EACH PROJECT AND THE APPROVAL OF THE PROJECT ARCHITECT OR STRUCTURAL ENGINEER AND DSA. THE PPROVAL IS SUBJECT TO CONTINUED SATISFACTORY PERFORMANCE. IF THE NAIL HEADS PENETRATE THE OUTER PLY MORE THAN WOULD BE NORMAL FOR A HAND-HELD HAMMER, OR IF MINIMUM ALLOWABLE EDGE DISTANCES ARE NOT MAINTAINED, THE PERFORMANCE WILL BE DEEMED UNSATISFACTORY AND MACHINE NAILING SHALL BE DISCONTINUED. FOR PLYWOOD SHEARWALLS WITH PLYWOOD ON BOTH SIDES OF WALL, MACHINE NAILING WILL BE ALLOWED ON ONE SIDE OF WALL ONLY.

WD-8) BOLTS: ASTM A307. ANCHOR RODS = ASTM F1554, FY = 36 KSI.

WD-9) PROVIDE LATERAL SUPPORT FOR BEAMS, JOISTS AND RAFTERS PER CBC 2308.8.5.

WD-10) GLUE FLOOR SHEATHING AT T&G JOINTS AND TO SUPPORTING MEMEBRS.

WD-11) NAILS, BOLTS AND SCREWS FOR PRESSURE PRESERVATIVE TREATED AND FIRE RETARDANT TREATED WOOD SHALL BE HOT-DIPPED ZINC COATED GALVANIZED.

SS STRUCTURAL STEEL

SS-1) STEEL MATERIALS:

SHAPE	MATERIAL
MISCELLANEOUS PLATES	ASTM A36
ANGLES & CHANNELS	ASTM A36
RECTANGULAR HSS (TUBES)	ASTM A500, GRADE B
ROUND HSS	ASTM A53, GRADE B
BOLTS	ASTM A325 N, UON
ANCHOR RODS	ASTM F1554, Fy=36ksi, UON
THREADED RODS	ASTM A36

SS-2) FOR STEEL MEMBERS AND EMBEDMENTS EXPOSED TO WEATHER, PROVIDE HOT-DIPPED GALVANIZED FINISH.

SS-3) PROVIDE HOLES IN ALL STEEL AS REQUIRED TO PREVENT ANY ACCUMULATION OF WATER. ALL PENETRATIONS THROUGH MAIN MEMBERS SHALL NOT EXCEED 1 1/8"Ø AND SHALL BE GROUND SMOOTH. THESE DRAINS MUST BE KEPT CLEAN AND OPEN.

SS-4) FIELD MODIFICATION OF STRUCTURAL STEEL IS PROHIBITED WITHOUT PRIOR APPROVAL OF THE ARCHITECT AND STRUCTURAL ENGINEER.

MS METAL STUDS

MS-1) ALL STUDS AND TRACKS SHALL CONFORM TO ASTM A1003 OR A653.
a. 18 GA AND LIGHTER: MINIMUM YIELD POINT OF 33KSI
b. 16 GA AND HEAVIER: MINIMUM YIELD POINT OF 50 KSI
c. ALL STUDS AND TRACKS SHALL BE MANUFACTURED BY CURRENT MEMBERS OF HTE STEEL STUD MANUFACTURERS ASSOCIATION (SSMA) LISTED IN ICC REPORT NO. ESR-3064P. ALL STUDS AND TRACKS SHALL COMPLY WITH ICC REPORT NO. ESR-3064P.

MS-2) ALL FRAMING COMPONENTS SHALL BE CUT SQUARELY OR ON AN ANGLE (SUCH AS BRACING) TO SQUARELY FIT AGAINST ABUTTING MEMBERS. MEMBERS SHALL BE HELD FIRMLY IN POSITION UNTIL PROPERLY FASTENED.

MS-3) STUDS AND TRACKS SHALL BE JOINED TOGETHER BY WELDING AND SHEET METAL SCREWS AS NOTED ON THE DRAWINGS.

MS-4) MANUFACTURER PROVIDED PUNCH-OUTS MAY BE LOCATED ALONG THE CENTERLINE OF THE WEBS OF FRAMING MEMBERS. PUNCH-OUTS SHALL HAVE A MINIMUM CENTER-TO-CENTER SPACING OF 24". PUNCH-OUTS SHALL HAVE A MAXIMUM WIDTH OF HALF THE MEMBER DEPTH OR 2 1/2", WHICHEVER IS LESS. AND A MAXIMUM LENGTH OF 4 1/2". SEE DETAIL 10/S9-300 FOR REQUIREMENTS WHEN HOLES ARE ADDED IN THE STUD WEB. PUNCH-OUTS IN TRACKS ARE NOT PERMITTED.

MS-5) SPLICE IN STUDS AND BRACES SHALL NOT BE PERMITTED.

MS-6) ALL FRAMING SHALL BE COORDINATED WITH GLAZING MANUFACTURER, MECHANICAL, ELECTRICAL, PLUMBING AND OTHER TRADES.

MS-7) PROVIDE 0.08" THICK x 1.1" SQ OR 1.425" ROUND WASHERS FOR ALL POWDER ACTUATED FASTENERS.

MS METAL STUDS

MS-1) ALL STUDS AND TRACKS SHALL CONFORM TO ASTM A1003 OR A653.
a. 18 GA AND LIGHTER: MINIMUM YIELD POINT OF 33KSI
b. 16 GA AND HEAVIER: MINIMUM YIELD POINT OF 50 KSI
c. ALL STUDS AND TRACKS SHALL BE MANUFACTURED BY CURRENT MEMBERS OF HTE STEEL STUD MANUFACTURERS ASSOCIATION (SSMA) LISTED IN ICC REPORT NO. ESR-3064P. ALL STUDS AND TRACKS SHALL COMPLY WITH ICC REPORT NO. ESR-3064P.

MS-2) ALL FRAMING COMPONENTS SHALL BE CUT SQUARELY OR ON AN ANGLE (SUCH AS BRACING) TO SQUARELY FIT AGAINST ABUTTING MEMBERS. MEMBERS SHALL BE HELD FIRMLY IN POSITION UNTIL PROPERLY FASTENED.

MS-3) STUDS AND TRACKS SHALL BE JOINED TOGETHER BY WELDING AND SHEET METAL SCREWS AS NOTED ON THE DRAWINGS.

MS-4) MANUFACTURER PROVIDED PUNCH-OUTS MAY BE LOCATED ALONG THE CENTERLINE OF THE WEBS OF FRAMING MEMBERS. PUNCH-OUTS SHALL HAVE A MINIMUM CENTER-TO-CENTER SPACING OF 24". PUNCH-OUTS SHALL HAVE A MAXIMUM WIDTH OF HALF THE MEMBER DEPTH OR 2 1/2", WHICHEVER IS LESS. AND A MAXIMUM LENGTH OF 4 1/2". SEE DETAIL 10/S9-300 FOR REQUIREMENTS WHEN HOLES ARE ADDED IN THE STUD WEB. PUNCH-OUTS IN TRACKS ARE NOT PERMITTED.

MS-5) SPLICE IN STUDS AND BRACES SHALL NOT BE PERMITTED.

MS-6) ALL FRAMING SHALL BE COORDINATED WITH GLAZING MANUFACTURER, MECHANICAL, ELECTRICAL, PLUMBING AND OTHER TRADES.

MS-7) PROVIDE 0.08" THICK x 1.1" SQ OR 1.425" ROUND WASHERS FOR ALL POWDER ACTUATED FASTENERS.

PA POST-INSTALLED ANCHORS

PA-1) POST-INSTALLED ANCHORS INCLUDE EXPANSION ANCHORS, SCREW ANCHORS, EPOXY ANCHORS/DOWELS, AND POWER-ACTUATED FASTENERS.

PA-2) INSTALL POST-INSTALLED ANCHORS IN ACCORDANCE WITH THE APPLICABLE ICC-ES REPORT AND THE MANUFACTURER'S RECOMMENDATIONS.

PA-3) USE SCANNING EQUIPMENT OR OTHER MEANS TO LOCATE AND AVOID CUTTING OR DAMAGING REINFORCING BARS. SER APPROVAL IS REQUIRED PRIOR TO CUTTING OR DAMAGING REINFORCING.

PA-4) SPECIAL INSPECTION IS REQUIRED FOR ALL POST-INSTALLED ANCHOR INSTALLATIONS, UON.

PA-5) FIELD TESTING OF POST-INSTALLED ANCHORS IS REQUIRED, UON. TEST INSTALLED ANCHORS IN ACCORDANCE WITH THE FOLLOWING:
A. TEST 100% OF ANCHORS AT ALLL STRUCTURAL APPLICATIONS, UON.
B. TEST 50% OF ANCHORS AT ALL NON-STRUCTURAL APPLICATIONS (SUCH AS EQUIPMENT ANCHORAGE), UON
C. TEST 10% OF ANCHORS AT SILL PLATE BOLTING APPLICATIONS (SUCH AS EQUIPMENT ANCHORAGE), UON.
D. IF ANY ANCHOR FAILS TESTING, TEST ALL ANCHORS OF THE SAME TYPE NOT PREVIOUSLY TESTED UNTIL 20 CONSECUTIVE ANCHORS PASS.
E. FIELD TESTS SHALL BE EITHER TENSION TESTS OR TORQUE TESTS, AS REQUIRED FOR THE SPECIFIC ANCHOR TYPE.
F. TENSION TESTS: APPLY TEST LOADS TO ANCHORS WITHOUT REMOVING THE NUT IF POSSIBLE. IF NOT, REMOVE NUT AND INSTALL A THREADED COUPLER TO THE SAME TIGHTNESS AS THE ORIGINAL NUT USING A TORQUE WRENCH. REACTION LOADS FROM TEST FIXTURES MAY BE APPLIED CLOSE TO THE ANCHOR BEING TESTED, PROVIDED THE ANCHOR IS NOT RESTRAINED FROM WITHDRAWING BY THE FIXTURES. TO BE ACCEPTABLE, ANCHORS SHALL HAVE NO OBSERVABLE MOVEMENT AT THE APPLICABLE TEST LOAD (OBSERVABLE MOVEMENT IS DEFINED AS THE WASHER UNDER THE NUT BECOMING LOOSE).
G. TORQUE TESTS: TO BE ACCEPTABLE, THE APPLICABLE TEST TORQUE MUST BE REACHED WITHIN ONE-HALF TURN OF THE NUT.
H. TEST EQUIPMENT IS TO BE CALIBRATED BY AN APPROVED TESTING LABORATORY IN ACCORDANCE IWTH STANDARD RECOGNIZED PROCEDURES.
I. FIELD TESTING SHALL BE DONE IN THE PRESENCE OF THE PROJECT INSPECTOR.
J. TESTING SHOULD OCCUR A MINIMUM OF 24 HOURS AFTER INSTALLATION OF THE SUBJECT ANCHOR.

PA-6) EXPANSION ANCHORS
A. EXPANSION ANCHORS SAHLL BE EITHER ONE OF THE FOLLOWING, UON:
HILTI KWIK BOLT TZ (ICC-ES REPORT ESR-1917)
SIMPSON STRONG-BOLT 2 (ICC-ES REPORT ESR-3037)

USE OF CARBON STEEL EXPANSION ANCHORS IS LIMITED TO DRY, INTERIOR LOCATIONS. USE STAINLESS STEEL EXPANSION ANCHORS AT EXTERIOR, WEATHER-EXPOSED, OR DAMP LOCATIONS.

B. ANCHOR EMBEDMENTS BELOW ARE TO BE USED WHEN EXPLICITLY SPECIFIED IN THE STRUCTURAL DRAWINGS. FOR LOCATIONS WHERE TENSION TEST VALUES ARE NOT SPECIFIED IN THE DRAWINGS, CONSULT WITH THE SER.

HILTI KWIK BOLT TZ IN NORMAL-WEIGHT CONCRETE			
ANCHOR DIAMETER	Hnom	MINIMUM HOLE DEPTH	TORQUE TEST VALUE (FT-LBS)
3/8"	2 5/16"	2 5/8"	25
1/2"	2 3/8"	2 5/8"	40

SIMPSON STRONG-BOLT 2 IN NORMAL-WEIGHT CONCRETE			
ANCHOR DIAMETER	Hnom	MINIMUM HOLE DEPTH	TORQUE TEST VALUE (FT-LBS)
3/8"	1 7/8"	2"	30
1/2"	2 3/4"	3"	60

GENERAL NOTES

- ALL WORK SHALL CONFORM TO 2013 EDITION TITLE 24, CALIFORNIA CODE OF REGULATIONS (CCR)
- CHANGE TO THE APPROVED DRAWINGS AND SPECIFICATIONS SHALL BE MADE BY ADDENDA OR CONSTRUCTION CHANGE DOCUMENT (CCD) APPROVED BY DSA, AS REQUIRED BY SECTION 4-338, PART 1, TITLE 24, CCR
- A DSA CERTIFIED" PROJECT INSPECTOR EMPLOYED BY THE DISTRICT (OWNER) AND APPROVED BY DSA SHALL PROVIDE CONTINUOUS INSPECTION OF THE WORK. THE DUTIES OF THE INSPECTOR ARE DEFINED IN SECTION 4-342, PART 1, TITLE 24, CCR
- THE INTENT OF THESE DRAWINGS AND SPECIFICATIONS IS THAT THE WORK OF THE ALTERATION, REHABILITATION OR RECONSTRUCTION IS TO BE IN ACCORDANCE WITH TITLE 24, CCR. SHOULD ANY EXISTING CONDITIONS SUCH AS DETERIORATION OR NO -COMPLYING CONSTRUCTION BE DISCOVERED WHICH IS NOT COVERED BY THE CONTRACT DOCUMENTS WHEREIN THE FINISHED WORK WILL NOT COMPLY WITH TITLE 24, CCR, A CONSTRUCTION CHANGE DOCUMENT (CCD), OR A SEPARATE SET OF PANS AND SPECIFICATIONS, DETAILING AND SPECIFYING THE REQUIRED WORK SHALL BE SUBMITTED TO AND APPROVED BY DSA BEFORE PROCEEDING WITH THE WORK. (SECTION 4-317(c), PART 1 , TITLE 24, CCR)
- CHANGES TO THE DIVISION OF THE STATE ARCHITECT-APPROVED DRAWINGS AND SPECIFICATIONS SHALL BE MADE BY ADDENDA OR CONSTRUCTION CHANGE DOCUMENTS FOR CHANGES TO THE STRUCTURAL, ACCESSIBILITY, OR FIRE-LIFE SAFETY PORTIONS OF THE WORK SHOWN THEREON.CAC 4-338 (C))
- SHOULD ANY EXISTING CONDITIONS SUCH AS DETERIORATION OR NON-COMPLYING CONSTRUCTION BE DISCOVERED WHICH IS NOT COVERED BY THE DSA APPROVED DOCUMENTS WHEREIN THE FINISHED WORK WILL NOT COMPLY WITH TITLE 24, CALIFORNIA CODE OF REGULATIONS, A CONSTRUCTION CHANGE DOCUMENT, OR A SEPARATE SET OF PLANS AND SPECIFICATIONS, DETAILING, AND SPECIFYING THE REQUIRED REPAIR WORK SHALL BE SUBMITTED TO AND APPROVED BY DSA BEFORE PROCEEDING WITH THE REPAIR WORK. (CAC, 2013, 4-317 (C))
- FIRE SAFETY DURING DEMOLITION AND CONSTRUCTION SHALL COMPLY WITH CFC CHAP 33.
- A DSA - CERTIFIED CLASS 3 PROJECT INSPECTOR IS REQUIRED FOR THIS PROJECT

PROJECT DIRECTORY

ARCHITECT
tBP/ARCHITECTURE
1777 Oakland Blvd, Suite 320
Walnut Creek, CA 94596
Ph: (925) 246-6419

MECH / PLUMBING
CAPITAL ENGINEERING
11020 Sun Center Drive, Suite 100
Rancho Cordova, CA 95670
Ph: (916) 851-3500

ELECTRICAL
WHM ENGINEERING
1605 School Street
Moraga, CA 94556
Ph: (925) 376-2902

TECHNOLOGY
TEECOM DESIGN GROUP
1333 Broadway Suite 601
Oakland, CA 94612
Ph: (510) 337-2800

DEFERRED APPROVALS

THE FOLLOWING ITEMS SHALL NOT BE INSTALLED UNTIL SIGNED ENGINEERING CALCULATIONS, DETAILED PLANS, SPECIFICATIONS AND EQUIPMENT SUBMITTALS HAVE BEEN SUBMITTED, REVIEWED AND APPROVED BY THE ENGINEER, ARCHITECT AND THE DIVISION OF THE STATE ARCHITECT.

1. N/A

tBP architecture planning interiors
tBP/Architecture
1777 Oakland Boulevard, Suite 320
Walnut Creek, CA 94596
ph: 925.246.6419
architect

consultant

IDENTIFICATION STAMP
DIV. OF THE STATE ARCHITECT
OFFICE OF REGULATION SERVICES
APPL #01-116617
FILE NO. 7-C1
AC FLS SS DATE

DIVISION OF THE STATE ARCHITECT
1515 CLAY STREET
OAKLAND, CA 94612
ph:(510) 622-3101
agency

C-4008 APPLIED ARTS & ADMIN RENOVATION
2600 MISSION BELL DRIVE, SAN PABLO, CA 94806
CONTRA COSTA COMMUNITY COLLEGE DISTRICT
500 COURT STREET MARTINEZ, CA 94553
owner

tBP project number: 20865.00
file name: A001-Index.dwg
drawn by: checked by:
date: APRIL 20, 2019

rev:	date:	description:
	8/17/2017	BID SET
A	09/21/17	ADDENDUM A NI
3	09/25/17	ADDENDUM 3 NI
A02	12/13/17	ASI 02
	04/20/2019	RECORD SET

THIS DRAWING AND THE DESIGNS, DEPICTIONS, IDEAS AND OTHER INFORMATION CONTAINED HEREIN CONSTITUTE UNPUBLISHED WORK OF tBP/ARCHITECTURE AND SHALL REMAIN PROPERTY OF tBP/ARCHITECTURE IN PERPETUITY. NO PART THEREOF SHALL BE REPRODUCED, DISCLOSED, DISTRIBUTED, SOLD, PUBLISHED OR OTHERWISE USED IN ANY WAY WITHOUT THE ADVANCED EXPRESS WRITTEN CONSENT OF tBP/ARCHITECTURE.

drawing title:
GEN. NOTES, ABBREV., & INDEX

drawing no.:
A001

drawing of

Record Dwgs

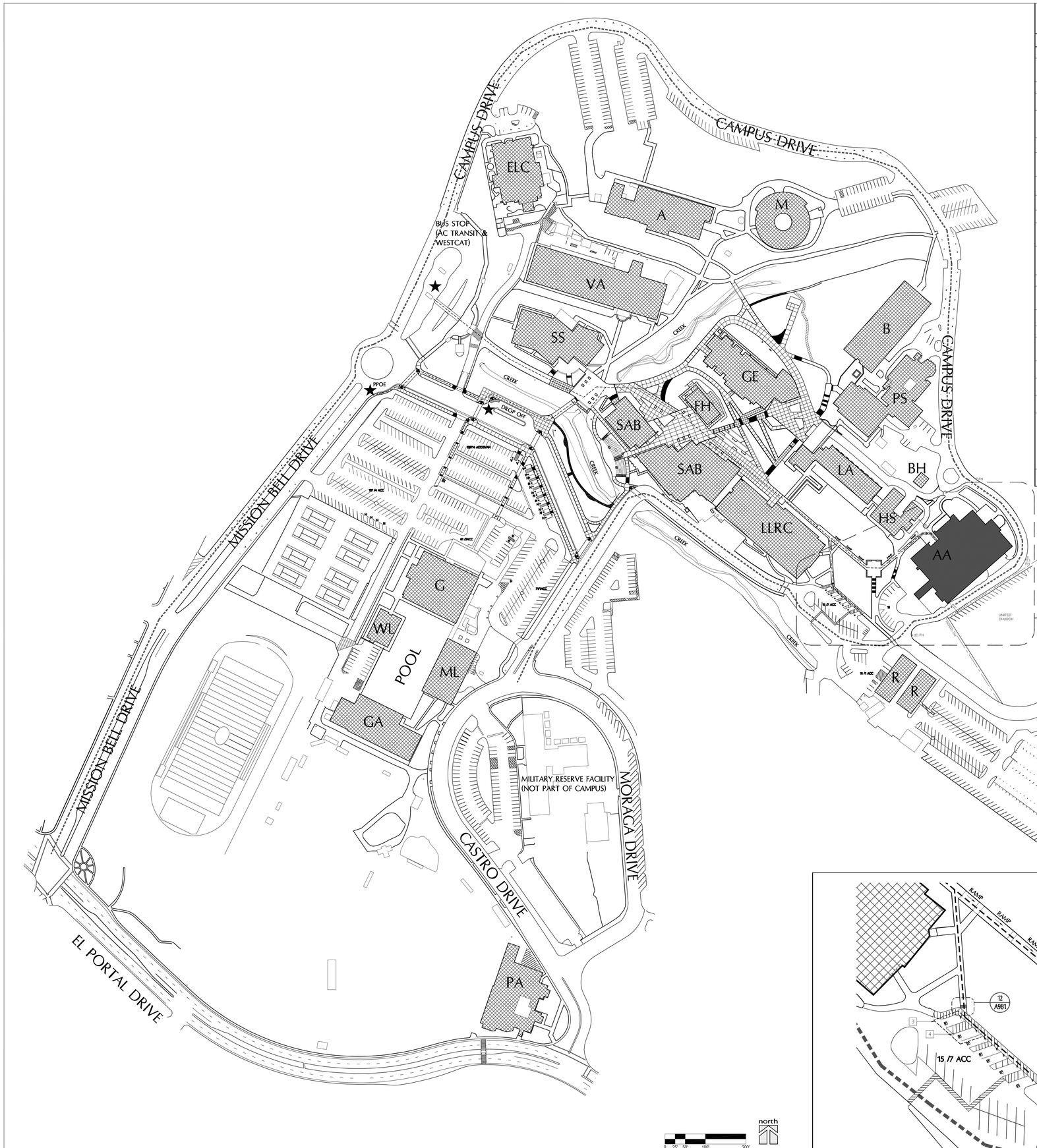

CAMPUS SITE PLAN

SCALE: 1"= 100'-0"

1

ENLARGED SITE PLAN

SCALE: 1"= 40'-0"

2

APPLICATION NUMBERS

BLDG. No.	BUILDING NAME	DSA APP NO.	APPROVAL
A	ART BUILDING	SAN 32474	11/26/64
AA	APPLIED ARTS/ ADMINISTRATION COMP.	SAN 42256 01-044406 01-110821	03/27/79 07/15/01 03/10/02
B	BIOLOGICAL SCIENCE	SAN 19381	12/20/59
BH	BOILER HOUSE	SAN 19381 SAN 45011	11/21/67 1983
ELC	EARLY LEARNING CENTER	01-103214	03/05/01
FH	FIRESIDE HALL	01-111356	11/27/12
G	GYM (PE GROUP)	SAN 14781 SAN 14780 SAN 49788	1956 1956 1988
GA	GYM ANNEX	SAN 15446 SAN 42423 SAN 49788	1957 1980 1988
GE	GENERAL EDUCATION	01-111356	11/27/12
HS	HEALTH SCIENCE	SAN 34875	1972
LA	LIBERAL ARTS	SAN 26794	1965
LLRC	LIBRARY & LEARNING RESOURCE CENTER	SAN 22125 SAN 50284 01-106732	1961 1984 2005
M	MUSIC BUILDING	SAN 23167	1962
ML	MEN'S LOCKER BUILDING	SAN 14373 SAN 42089 SAN 50240	1956 1979 1988
PAC	PERFORMING ARTS CENTER	SAN 41183	1978
POOL	SWIMMING POOL	SAN 32170	1969
PS	NATURAL SCIENCE BUILDING	SAN 11810 SAN 30521 SAN 36531	1954 1968 1973
R	RECEIVING	SAN 28235 SAN 30521	1966 1968
SAB	STUDENT ACTIVITIES BUILDING	01-111356	11/27/12
SSC	STUDENT SERVICES CENTER	01-107745	01/24/06
VA	VOCATIONAL ARTS BUILDING	SAN 15141 SAN 25983 SAN 28463 SAN 53458 SAN 53623 SAN 61028 01-106648 01-110841	1957 1965 1967 1990 1991 1994 2005 07/27/09
WL	WOMEN'S LOCKER BUILDING	SAN 20760	1961

GENERAL NOTES

1. THE ACCESSIBLE PATH OF TRAVEL AS INDICATED ON PLAN IS A BARRIER FREE ACCESS ROUTE W/O ANY ABRUPT LEVEL CHANGES EXCEEDING 1/2" BEVELED AT 1:2 MAX SLOPE, OR VERTICAL LEVEL CHANGE NOT EXCEEDING 1/4" MAX AND AT LEAST 48" WIDE. SURFACE IS SLIP RESISTANT, STABLE, FIRM AND SMOOTH. CROSS SLOPE DOES NOT EXCEED 2% AND SLOPE IN THE DIRECTION OF TRAVEL IS LESS THAN 5% UNLESS OTHERWISE INDICATED.
2. CONTRACTOR TO VERIFY THAT ALL BARRIERS IN THE PATH OF TRAVEL HAVE BEEN REMOVED OR WILL BE REMOVED UNDER THIS PROJECT, AND PATH OF TRAVEL COMPLIES WITH CBC 11B-206.4.
3. THE PATH OF TRAVEL IDENTIFIED IN THESE CONSTRUCTION DOCUMENTS IS COMPLIANT WITH THE CURRENT APPLICABLE CALIFORNIA BUILDING CODE ACCESSIBILITY PROVISIONS FOR PATH OF TRAVEL REQUIREMENTS FOR ALTERATIONS, ADDITIONS AND STRUCTURAL REPAIRS. AS PART OF THE DESIGN OF THIS PROJECT, THE PATH OF TRAVEL WAS EXAMINED AND ANY ELEMENTS, COMPONENTS OR PORTIONS OF THE PATH OF TRAVEL THAT WERE DETERMINED TO BE NONCOMPLIANT 1) HAVE BEEN IDENTIFIED AND 2) THE CORRECTIVE WORK NECESSARY TO BRING THEM INTO COMPLIANCE HAS BEEN INCLUDED WITHIN THE SCOPE OF THIS PROJECT'S WORK THROUGH DETAILS, DRAWINGS AND SPECIFICATIONS INCORPORATED INTO THESE CONSTRUCTION DOCUMENTS. ANY NONCOMPLIANT ELEMENTS, COMPONENTS OR PORTIONS OF THE PATH OF TRAVEL THAT WILL NOT BE CORRECTED BY THIS PROJECT BASED ON VALUATION THRESHOLD LIMITATIONS OR A FINDING OF UNREASONABLE HARDSHIP ARE SO INDICATED IN THESE CONSTRUCTION DOCUMENTS.
DURING CONSTRUCTION, IF PATH OF TRAVEL ITEMS WITHIN THE SCOPE OF THE PROJECT PRESENTED AS CODE COMPLIANT ARE FOUND TO BE NONCONFORMING BEYOND REASONABLE CONSTRUCTION TOLERANCES, THEY SHALL BE BROUGHT INTO COMPLIANCE WITH THE CBC AS A PART OF THIS PROJECT BY MEANS OF A CONSTRUCTION CHANGE DIRECTIVE.

LEGEND

- ACCESSIBLE PATH OF TRAVEL
- FIRE ACCESS
- PUBLIC POINT OF ENTRY (PPOE)
  DROP OFF LOCATION (DSA # 01-111356)
  BUS STOP (AC TRANSIT & WESTCAT)
- EXISTING BUILDINGS - N.I.C.
- SCOPE OF WORK BUILDING

KEYNOTES

1. (N) STRAIGHTEN HANDRAIL EXTENSIONS - SEE DETAIL 18/A981
2. (N) 5' WIDE STRIPED PATHWAY AT 2% MAX - ALL DIRECTIONS
3. (N) OVERLAY PAVING TO CREATE 2% MAX TO INLET - REPAINT PARKING STRIPPING PER 20/A981
4. (N) RING TO D1

tBP
architecture
planning
interiors

tBP/Architecture
1777 Oakland Boulevard, Suite 320
Walnut Creek, CA 94596
ph: 925.246.6419

architect

consultant

REGISTRATION STAMP
DIV. OF THE STATE ARCHITECT
OFFICE OF REGULATION SERVICES
APPL # 01-116617
FILE NO. 7-C1
AC ___ FLS ___ SS ___
DATE ___

DIVISION OF THE STATE ARCHITECT
1515 CLAY STREET
OAKLAND, CA94612
ph:(510) 622-3101

agency

C-4008 APPLIED ARTS & ADMIN RENOVATION

2600 MISSION BELL DRIVE, SAN PABLO, CA 94806

CONTRA COSTA COMMUNITY COLLEGE DISTRICT
500 COURT STREET MARTINEZ, CA 94553

owner

tBP project number: 20865.00
file name: A002 Site Plan DSA NOs.dwg
drawn by: checked by:
date: APRIL 20, 2019

rev:	date:	description:
	8/17/2017	BID SET
	04/20/2019	RECORD SET

THE DRAWING AND THE BUILDING, CONTAINING IDEAS AND OTHER INFORMATION COMPRISED HEREIN, CONSTITUTE UNPUBLISHED WORK OF tBP/ARCHITECTURE AND SHALL REMAIN PROPERTY OF tBP/ARCHITECTURE IN PERPETUITY. NO PART THEREOF SHALL BE REPRODUCED, DISCLOSED, DISTRIBUTED, SOLD, PUBLISHED OR OTHERWISE USED IN ANY WAY WITHOUT THE ADVANCED EXPRESS WRITTEN CONSENT OF tBP/ARCHITECTURE.

drawing title:
Site Plan

drawing no.:
A002

drawing of

Record Dwgs

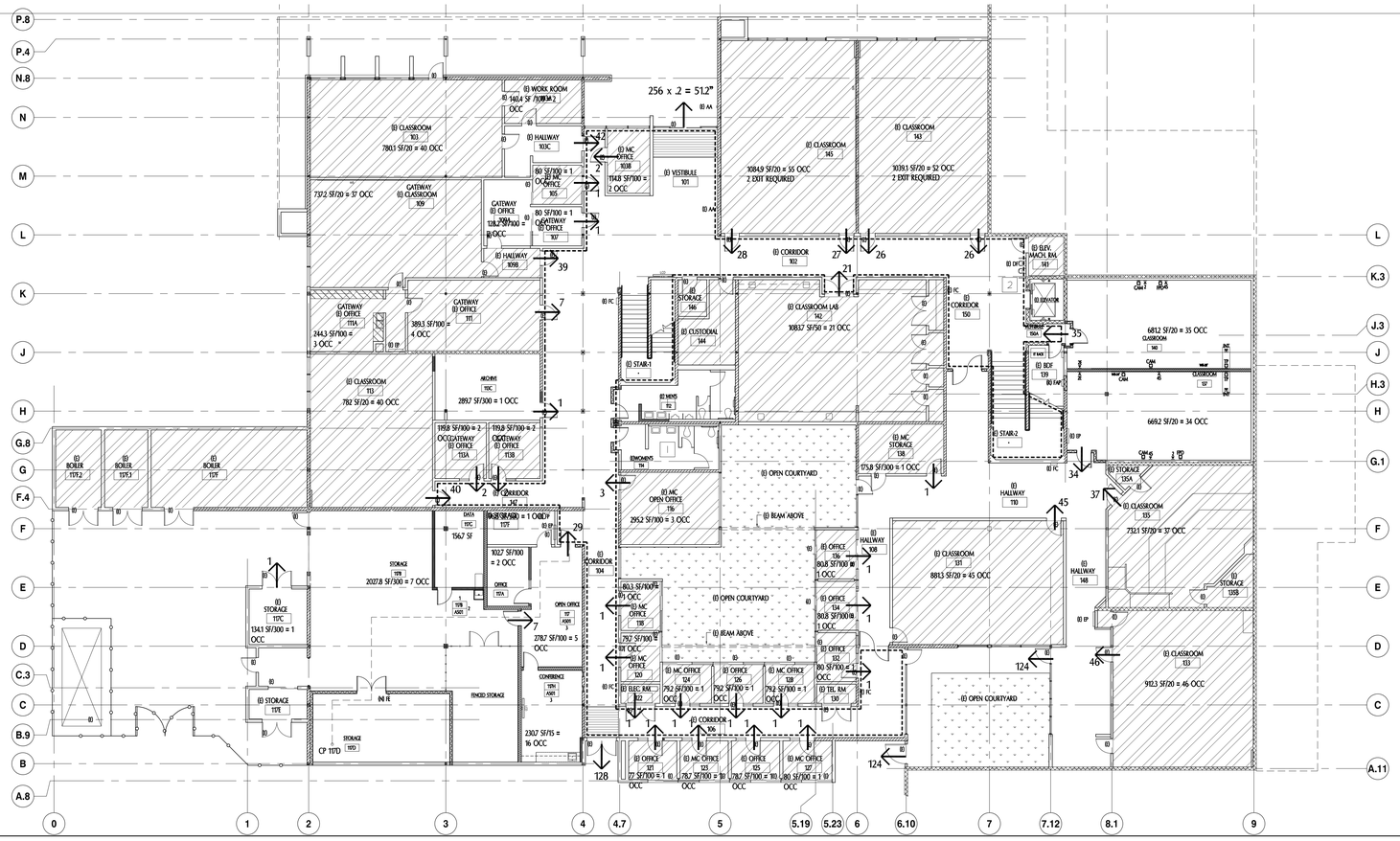

FIRST FLOOR PLAN

SCALE: 3/32" = 1'-0"

1

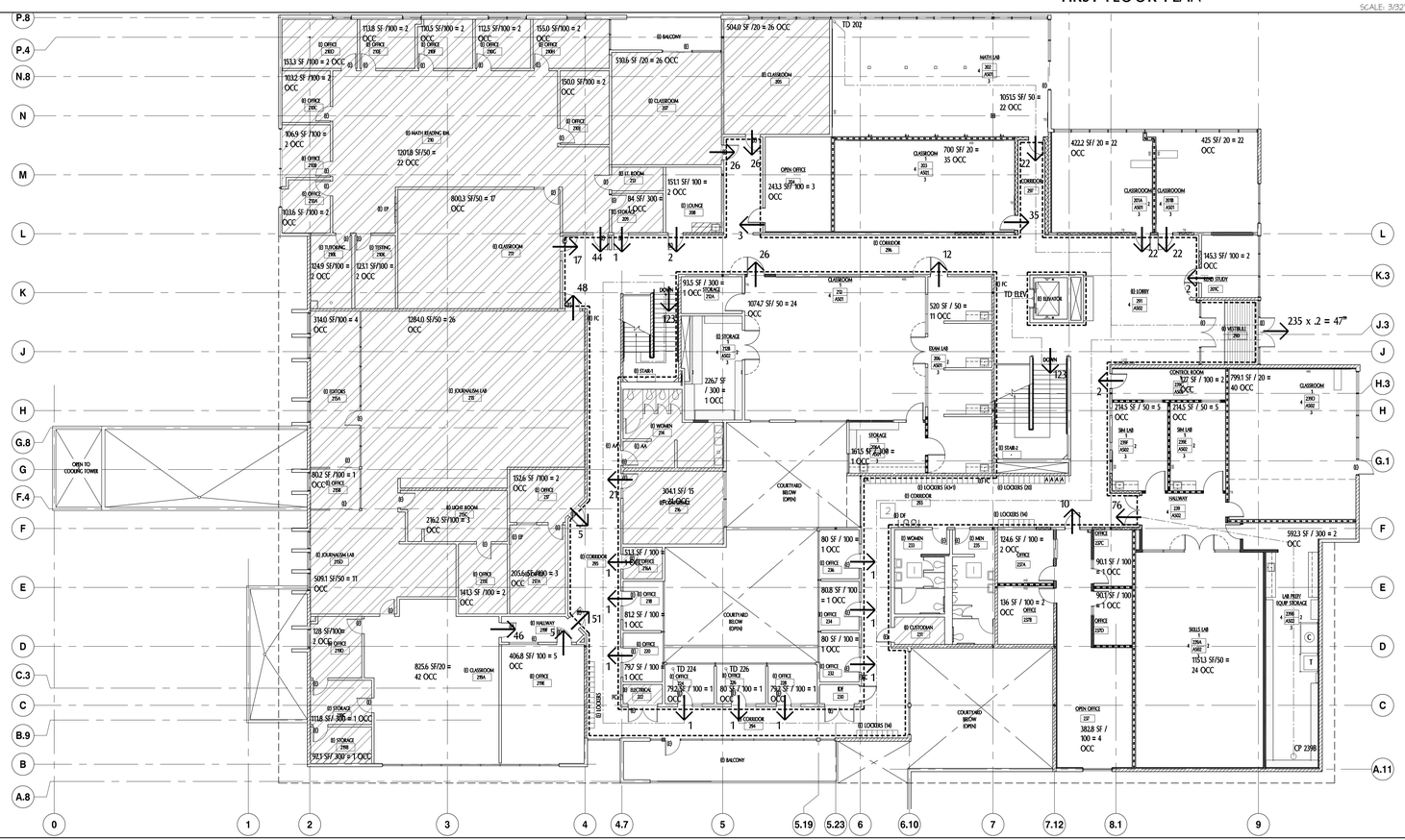

SECOND FLOOR PLAN

SCALE: 3/32" = 1'-0"

2

CODE ANALYSIS

DESCRIPTION:
- A PARTIAL RENOVATION ON 1ST & 2ND FLOOR OF THE EXISTING APPLIED ARTS BLDG, TOTALING APPROX. 19,000 GSF FOR OFFICES AND CLASSROOMS

- (E) CONSTRUCTION TYPE V-A (EXISTING), NOT SPRINKLERED

SEISMIC DATA: SEISMIC DESIGN CATEGORY D
LATITUDE = 37.9166
LONGITUDO
SI = 0.600
SITE COEFFICIENTS
SITE CLASS D
Fa = 1.0
Fv = 1.5
SMS = 2.02
SM1 = 1.181
SDS = 1.641
SD1 = 0.788

STORY:	2
1ST FLOOR AREA:	26,484 SF (EXISTING)
2ND FLOOR AREA:	28,741 SF (EXISTING)
OCCUPANCY:	GROUP 'B' (EDUCATION ABOVE 12TH GRADE), A-3 AND S-1

AREA INCREASE: [F/P-0.25] 14/30
[1-0.25] 26/30 = .5
[.75] * .866 = .65
18,000 x 1.65 = 29,700 PER FLOOR

KEYNOTES

1. RESTROOM RENOVATED 2008 - DSA # 01-110821
2. HIGH-LOW DRINKING FOUNTAIN INSTALLED IN 2008 - DSA # 01-110821

CODES AND DESIGN CRITERIA

GD-1) PERFORM ALL CONSTRUCTION IN CONFORMANCE WITH THE BUILDING AND DESIGN CODES REFERENCED WITHIN THESE DOCUMENTS. THE PROJECT DOCUMENTS REFER TO THE FOLLOWING CODES AND STANDARDS, UON.

2016 CALIFORNIA BUILDING CODE (CBC) WITH DSA/SS AMENDMENTS

GD-2) RISK CATEGORY: III SCHOOL
GD-3) ROOF LIVE LOADS: 20 LBS/SQ. FT.

LEGEND

PATH OF TRAVEL

TRAVEL DISTANCE	COMMON PATH OF TRAVEL
TD ELEV= 23'-8"	CP 117D = 64'-8"
TD 202 = 184'-7"	CP 234B = 84'-8"
TD 224 = 200'-0"	
TD 226 = 195'-8"	

1-HR RATED CORRIDOR

B OCCUPANCY

S-1 OCCUPANCY

A-3 OCCUPANCY

(E) LANDSCAPE

NOT IN SCOPE

GENERAL NOTE

1. CONTRACTOR TO VERIFY (E) HALLWAY 108, 110, AND 148 ARE RATED CORRIDORS. IF NOT, ARCHITECT TO PROVIDE CCD FOR DSA APPROVAL TO RATE THE CORRIDOR.

tBP/Architecture
1777 Oakland Boulevard, Suite 320
Walnut Creek, CA 94596
ph: 925.248.8419

architect

consultant

IDENTIFICATION STAMP
DIV. OF THE STATE ARCHITECT
OFFICE OF REGULATION SERVICES
APPL # 01-110617
FILE NO. 7-C1
AC ___ FCS ___ SS ___
DATE

DIVISION OF THE STATE ARCHITECT
1515 CLAY STREET
OAKLAND, CA94612
ph:(510) 622-3101

agency

C-4008 APPLIED ARTS & ADMIN RENOVATION

2600 MISSION BELL DRIVE, SAN PABLO, CA 94806

CONTRA COSTA COMMUNITY COLLEGE DISTRICT
500 COURT STREET MARTINEZ, CA 94553

owner

tBP project number: 20865.00
file name: A021 CODE ANALYSIS.DWG
drawn by: checked by:
date: APRIL 20, 2019

rev:	date:	description:
	8/17/2017	BID SET
	04/20/2019	RECORD SET

THIS DRAWING AND THE DESIGNS, DEFINITIONS, IDEAS AND OWNER INFORMATION CONTAINED HEREIN CONSTITUTE UNPUBLISHED WORK OF tBP/ARCHITECTURE AND SHALL REMAIN PROPERTY OF tBP/ARCHITECTURE IN PERPETUITY. NO PART THEREOF SHALL BE REPRODUCED, INCLUDED, DISTRIBUTED, SOLD, PUBLISHED OR OTHERWISE USED IN ANY WAY WITHOUT THE ADVANCED EXPRESS WRITTEN CONSENT OF tBP/ARCHITECTURE.

drawing title:
CODE ANALYSIS

drawing no.:
A021

drawing of

Record Dwgs

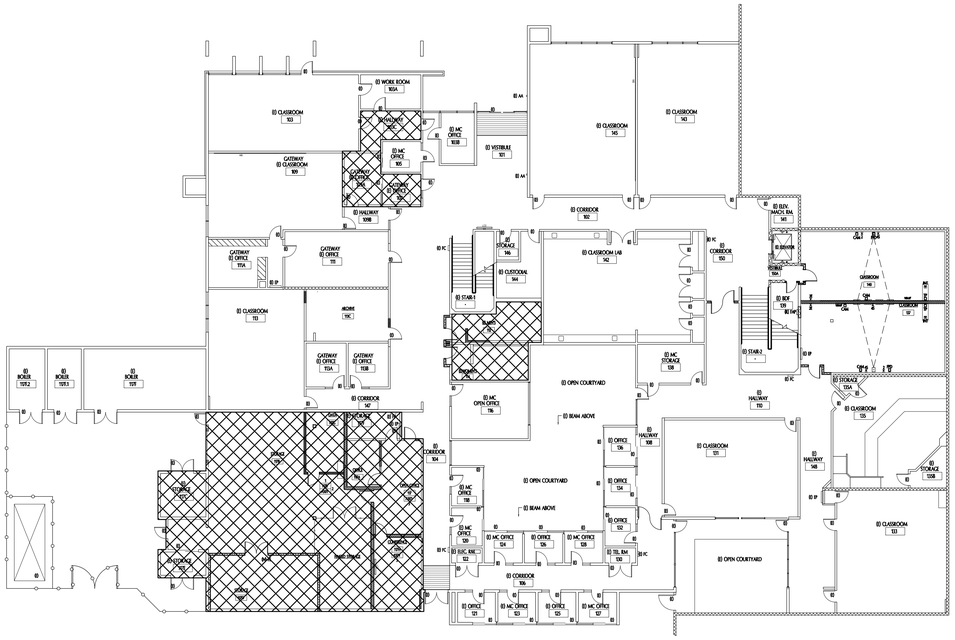

FIRST FLOOR

- CUSTODIAL DEPARTMENT
- ARCHIVE
- GATEWAY OFFICES AND HALLWAY 103C
- 1ST FLOOR RESTROOMS

1 PHASE 1

SCALE: 1/16" = 1'-0"

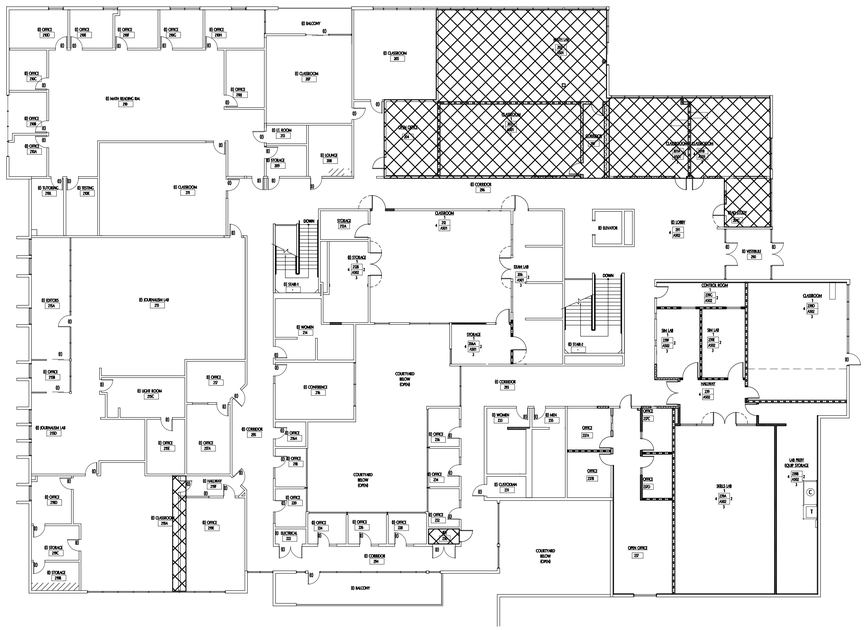

SECOND FLOOR

- CLASSROOMS
- IDF

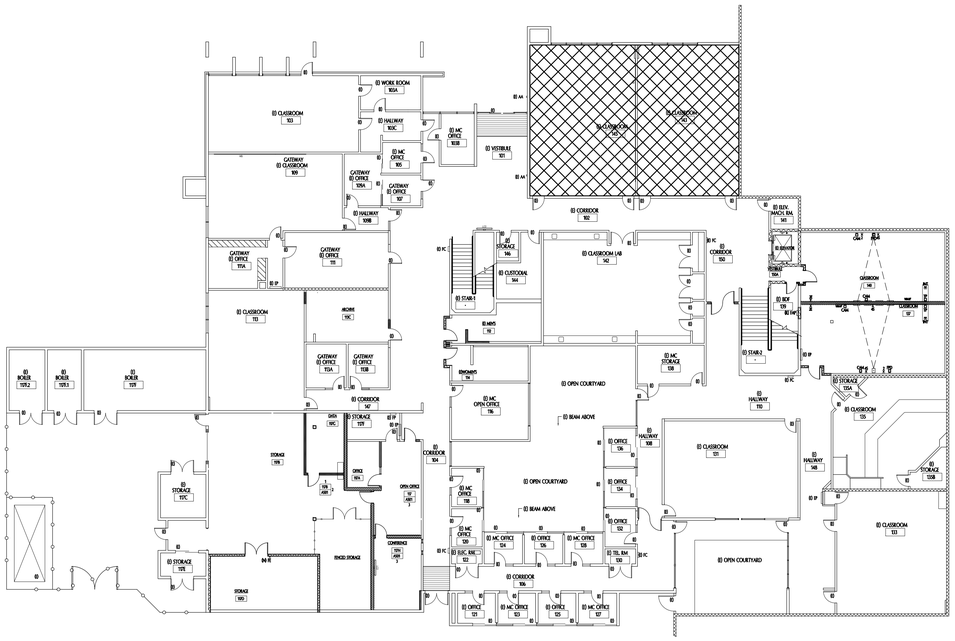

FIRST FLOOR

- SUBJECT TO DISRUPTION DURING PHASE 1

1.5 PHASE 1.5

SCALE: 1/16" = 1'-0"

GENERAL NOTES

1. GATEWAY MOVES TO THE FIRST FLOOR BEFORE PHASE 1
2. SPEECH MOVES TO SECOND FLOOR AFTER COMPLETION OF PHASE 1

PHASE - AREA OF WORK

north

tBP
architecture
planning
interiors

tBP/Architecture
1777 Oakland Boulevard, Suite 320
Walnut Creek, CA 94596
ph: 925.248.8419

architect

consultant

IDENTIFICATION STAMP
DIV. OF THE STATE ARCHITECT
OFFICE OF REGULATION SERVICES
APPL # 01-110617
FILE NO. 7-C1
AC ____ FLS ____ SS ____
DATE ____

DIVISION OF THE STATE ARCHITECT
1515 CLAY STREET
OAKLAND, CA94612
ph:(510) 622-3101

agency

C-4008 APPLIED ARTS & ADMIN RENOVATION

2600 MISSION BELL DRIVE, SAN PABLO, CA 94806

CONTRA COSTA COMMUNITY COLLEGE DISTRICT
500 COURT STREET MARTINEZ, CA 94553

owner

tBP project number: 20865.00
file name: PHASING PLANS 2
drawn by: checked by:
date: APRIL 20, 2019

rev:	date:	description:
	8/17/2017	BID SET
	04/20/2019	RECORD SET

THIS DRAWING AND THE DESIGNS, DEFINITIONS, IDEAS AND OTHER INFORMATION CONTAINED HEREIN CONSTITUTE UNPUBLISHED WORK OF tBP/ARCHITECTURE AND SHALL REMAIN PROPERTY OF tBP/ARCHITECTURE IN PERPETUITY. NO PART THEREOF SHALL BE REPRODUCED, MODIFIED, DISTRIBUTED, SOLD, PUBLISHED OR OTHERWISE USED IN ANY WAY WITHOUT THE ADVANCED EXPRESS WRITTEN CONSENT OF tBP/ARCHITECTURE.

drawing title:
CONSTRUCTION PHASING PLANS

drawing no.: A022

drawing of

Record Dwgs

FIRST FLOOR

- CORRIDORS AND VESTIBULES

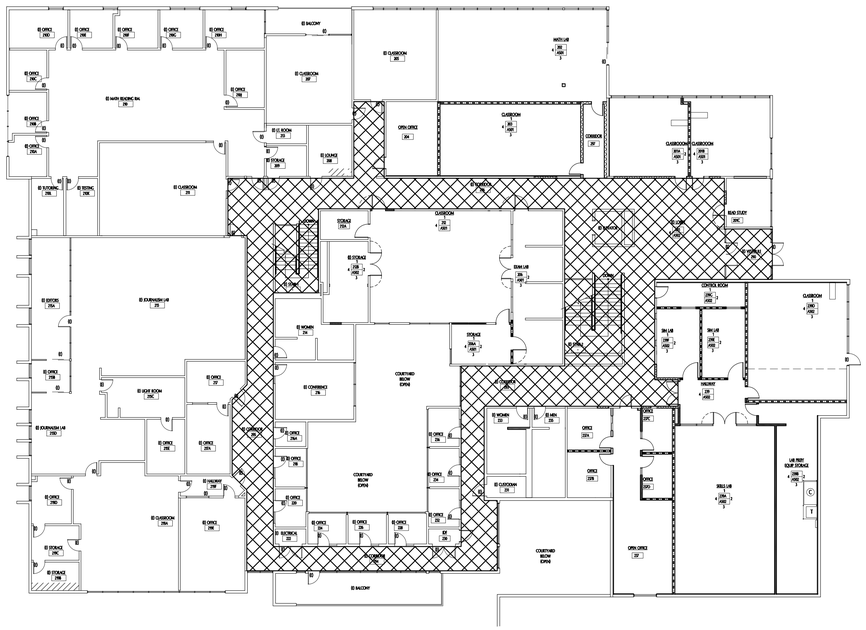

SECOND FLOOR

- CORRIDORS AND VESTIBULES

3 PHASE 3

SCALE: 1/16"= 1'-0"

GENERAL NOTES

1. GATEWAY MOVES TO THE FIRST FLOOR BEFORE PHASE 1
2. SPEECH MOVES TO SECOND FLOOR AFTER COMPLETION OF PHASE 1

PHASE - AREA OF WORK

north

tBP
architecture
planning
interiors

tBP/Architecture
1777 Oakland Boulevard, Suite 320
Walnut Creek, CA 94596
ph: 925.240.6419

architect

consultant

IDENTIFICATION STAMP
DIV. OF THE STATE ARCHITECT
OFFICE OF REGULATION SERVICES
APPL # 01-116617
FILE NO. 7-C1
AC ___ FLS ___ SS ___
DATE ___

DIVISION OF THE STATE ARCHITECT
1515 CLAY STREET
OAKLAND, CA94612
ph:(510) 622-3101

agency

C-4008 APPLIED ARTS & ADMIN RENOVATION

2600 MISSION BELL DRIVE, SAN PABLO, CA 94806

CONTRA COSTA COMMUNITY COLLEGE DISTRICT
500 COURT STREET MARTINEZ, CA 94553

owner

tBP project number: 20865.00
file name: PHASING PLANS 2
drawn by: checked by:
date: APRIL 20, 2019

rev:	date:	description:
	8/17/2017	BID SET
	04/20/2019	RECORD SET

THIS DRAWING AND THE DESIGNS, DEFINITIONS, IDEAS AND OTHER INFORMATION CONTAINED HEREIN CONSTITUTE UNPUBLISHED WORK OF tBP/ARCHITECTURE AND SHALL REMAIN PROPERTY OF tBP/ARCHITECTURE IN PERPETUITY. NO PART THEREOF SHALL BE REPRODUCED, MODIFIED, DISTRIBUTED, SOLD, PUBLISHED OR OTHERWISE USED IN ANY WAY WITHOUT THE ADVANCED EXPRESS WRITTEN CONSENT OF tBP/ARCHITECTURE.

drawing title:

CONSTRUCTION PHASING PLANS

drawing no.: A024

drawing of

Record Dwgs

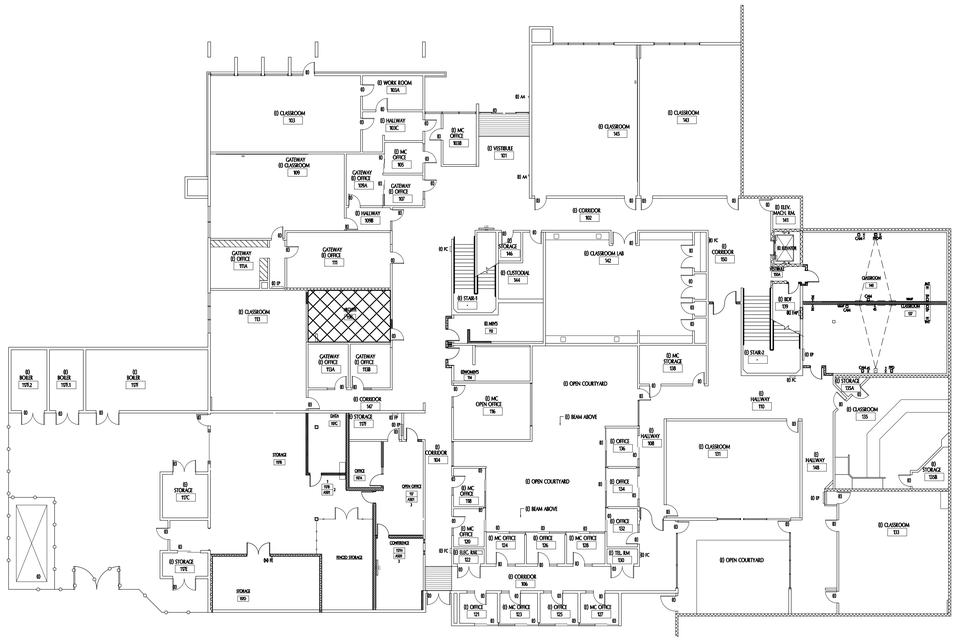

FIRST FLOOR

- ARCHIVE

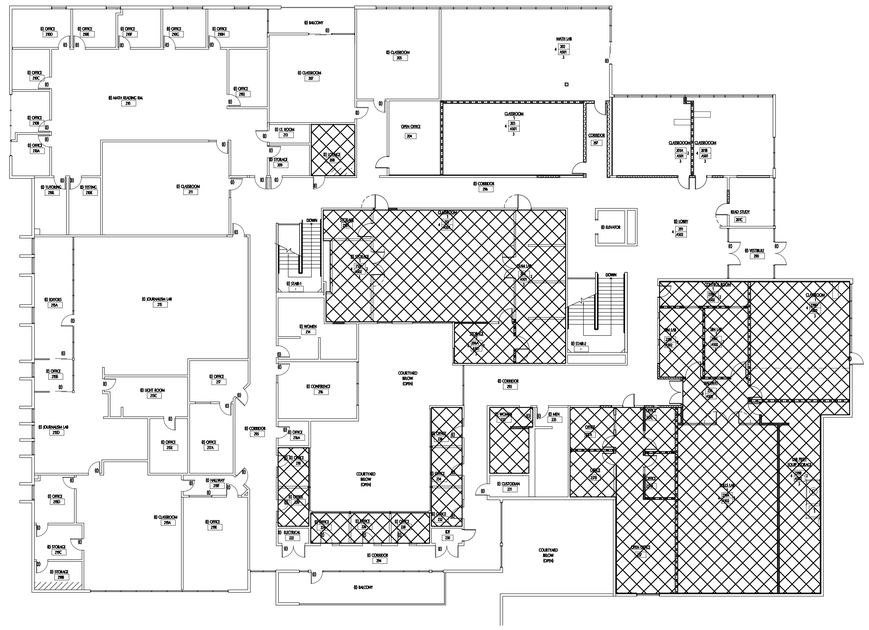

SECOND FLOOR

- NURSING DEPARTMENT
- EMT/MA DEPARTMENT
- BREAK ROOM
- SPEECH SOUND WALLS
- 2ND FLOOR RESTROOMS

2 PHASE 2

SCALE: 1/16" = 1'-0"

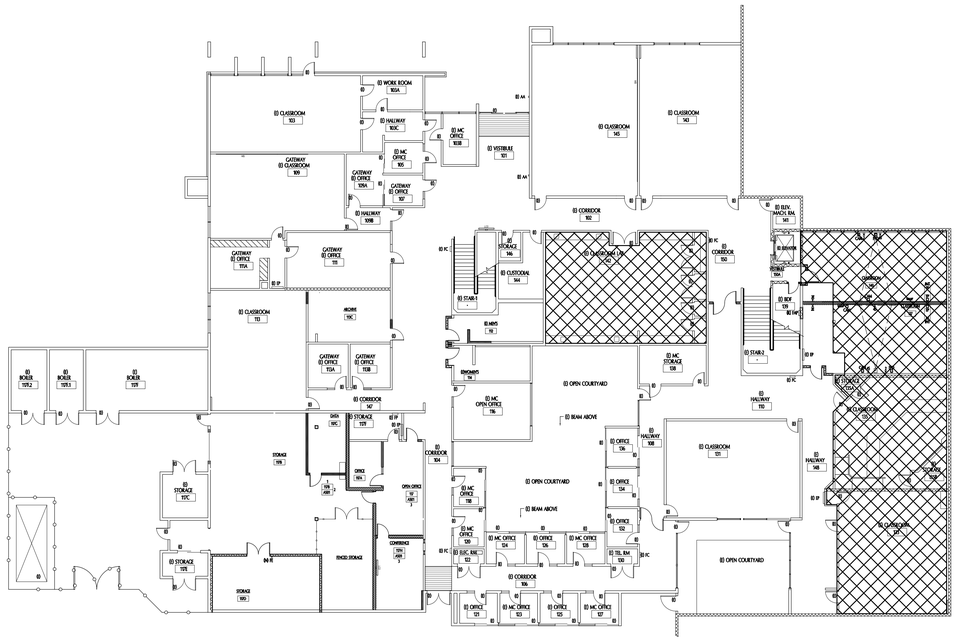

FIRST FLOOR

- SUBJECT TO DISRUPTION DURING PHASE 1

2.5 PHASE 2.5

SCALE: 1/16" = 1'-0"

GENERAL NOTES

1. GATEWAY MOVES TO THE FIRST FLOOR BEFORE PHASE 1
2. SPEECH MOVES TO SECOND FLOOR AFTER COMPLETION OF PHASE 1

PHASE - AREA OF WORK

north

tBP
architecture
planning
interiors

tBP/Architecture
1777 Oakland Boulevard, Suite 320
Walnut Creek, CA 94596
ph: 925.246.6419

architect

consultant

IDENTIFICATION STAMP
DIV. OF THE STATE ARCHITECT
OFFICE OF REGULATION SERVICES
APPL # 01-118617
FILE NO. 7-C1
AC ____ FCS ____ SS ____
DATE ____

DIVISION OF THE STATE ARCHITECT
1515 CLAY STREET
OAKLAND, CA94612
ph:(510) 622-3101

agency

C-4008 APPLIED ARTS & ADMIN RENOVATION

2600 MISSION BELL DRIVE, SAN PABLO, CA 94806

CONTRA COSTA COMMUNITY COLLEGE DISTRICT
500 COURT STREET MARTINEZ, CA 94553

owner

tBP project number: 20865.00
file name: PHASING PLANS 2
drawn by: checked by:
date: APRIL 20, 2019

rev:	date:	description:
	8/17/2017	BID SET
	04/20/2019	RECORD SET

THIS DRAWING AND THE DESIGNS, DEFINITIONS, IDEAS AND OTHER INFORMATION CONTAINED HEREIN CONSTITUTE UNPUBLISHED WORK OF tBP/ARCHITECTURE AND SHALL REMAIN PROPERTY OF tBP/ARCHITECTURE IN PERPETUITY. NO PART THEREOF SHALL BE REPRODUCED, MODIFIED, DISTRIBUTED, SOLD, PUBLISHED OR OTHERWISE USED IN ANY WAY WITHOUT THE ADVANCED EXPRESS WRITTEN CONSENT OF tBP/ARCHITECTURE.

drawing title:
CONSTRUCTION PHASING PLANS

drawing no.: A023

drawing of

Record Dwgs

FIRST FLOOR

- CORRIDORS AND VESTIBULES

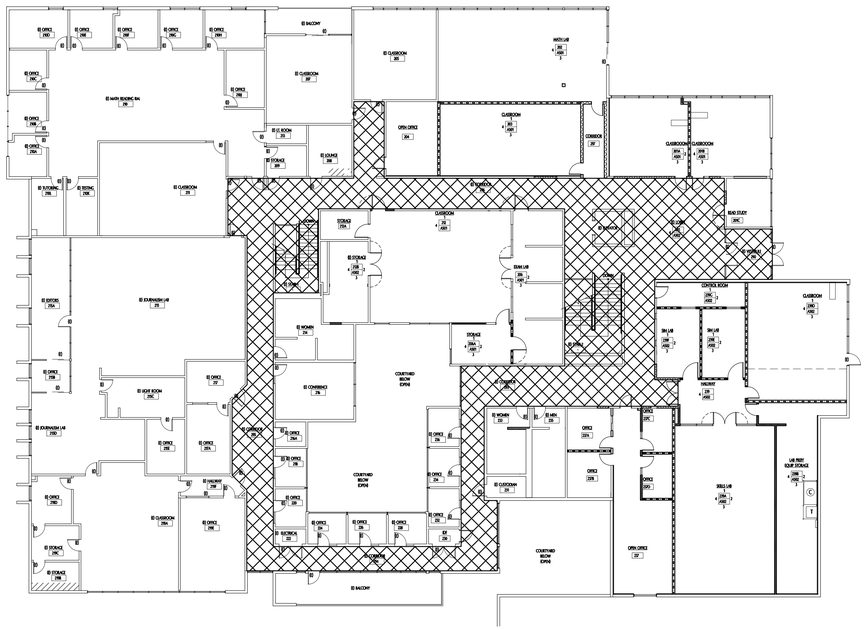

SECOND FLOOR

- CORRIDORS AND VESTIBULES

3 PHASE 3

SCALE: 1/16"= 1'-0"

GENERAL NOTES

1. GATEWAY MOVES TO THE FIRST FLOOR BEFORE PHASE 1
2. SPEECH MOVES TO SECOND FLOOR AFTER COMPLETION OF PHASE 1

PHASE - AREA OF WORK

north

tBP
architecture
planning
interiors

tBP/Architecture
1777 Oakland Boulevard, Suite 320
Walnut Creek, CA 94596
ph: 925.240.6419

architect

consultant

IDENTIFICATION STAMP
DIV. OF THE STATE ARCHITECT
OFFICE OF REGULATION SERVICES
APPL # 01-116617
FILE NO. 7-C1
AC ___ FLS ___ SS ___
DATE ___

DIVISION OF THE STATE ARCHITECT
1515 CLAY STREET
OAKLAND, CA94612
ph:(510) 622-3101

agency

C-4008 APPLIED ARTS & ADMIN RENOVATION

2600 MISSION BELL DRIVE, SAN PABLO, CA 94806

CONTRA COSTA COMMUNITY COLLEGE DISTRICT
500 COURT STREET MARTINEZ, CA 94553

owner

tBP project number: 20865.00
file name: PHASING PLANS 2
drawn by: checked by:
date: APRIL 20, 2019

rev:	date:	description:
	8/17/2017	BID SET
	04/20/2019	RECORD SET

THIS DRAWING AND THE DESIGNS, DEFINITIONS, IDEAS AND OTHER INFORMATION CONTAINED HEREIN CONSTITUTE UNPUBLISHED WORK OF tBP/ARCHITECTURE AND SHALL REMAIN PROPERTY OF tBP/ARCHITECTURE IN PERPETUITY. NO PART THEREOF SHALL BE REPRODUCED, MODIFIED, DISTRIBUTED, SOLD, PUBLISHED OR OTHERWISE USED IN ANY WAY WITHOUT THE ADVANCED EXPRESS WRITTEN CONSENT OF tBP/ARCHITECTURE.

drawing title:

CONSTRUCTION PHASING PLANS

drawing no.: A024

drawing of

Record Dwgs

GENERAL NOTES

1. REFER TO OTHER DISCIPLINE'S DOCUMENTS FOR ADDITIONAL DEMOLITION SCOPE, INCLUDING BUT NOT LIMITED TO LIGHT FIXTURES, DUCTWORK, CABLE TRAYS, RACEWAYS ETC. COORDINATE WITH M.E.P., FIRE ALARM, AND TELECOM DRAWINGS.
2. WHERE DOUBLE-SWING/ SINGLE DOORS AND/OR SLIDING DOORS ARE DEMO'D WITH IN-GROUND DOOR HARDWARE, REMOVE IN-GROUND DOOR HARDWARE. FILL WITH NON-SHRINK GROUT., REFER TO DETAIL 3/A822
3. ITEMS LISTED BELOW SHALL BE SALVAGE AND DELIVERED TO BUILDINGS AND GROUNDS:
   - WHITE BOARD & TACKBOARDS
   - PROJECTOR MOUNTS AND SCREENS
   - WALL MOUNTED FIRE EXTINGUISHERS
   - CLOCKS
   - TELEVISIONS
   - SPEAKERS
   - CAMERAS
   - LIGHT FIXTURES
   - LOCKERS
   - CEILING WOOD PANELING
4. ALL WINDOW COVERING WITHIN SCOPE OF WORK SHALL BE REMOVED. U.N.O
5. PRIOR TO START OF DEMOLITION, CONTRACTOR TO WALK SCOPE OF WORK AREA WITH DISTRICT AND BUILDING/GROUNDS, COORDINATE AND DETERMINE ITEMS TO BE SALVAGED AND DELIVERED TO COLLEGE, OR TO BE DISPOSED IF NOT NEEDED.
6. ITEMS (TO REMAIN) LISTED BELOW SHALL BE PROTECT FROM DAMAGE DURING CONSTRUCTION PERIOD.
   - STOREFRONTS
   - WINDOWS
   - DOORS
   - FLOOR FINISHES
   - WALL FINISHES
   - CEILINGS
7. THE SECOND FLOOR OF THIS BLDG IS A 1 HOUR CONSTRUCTION. CONTRACTOR MUST REMOVE THE GYP BD TO PROVIDE BLOCKING FOR BOTH 1ST AND 2ND FLOOR WALLS AND/OR ANY OTHER CONSTRUCTION. SOME NOT IN SCOPE AREAS WILL NEED TO BE ACCESSED DURING CONSTRUCTION, COORDINATE WITH COLLEGE FOR ACCESSIBILITY. REPAIR ALL DEMOLITION
8. WHERE FLOORING TO BE SEALED, PREP FLOOR TO BE BEAD BLASTED
9. THE BUILDING MUST BE FULLY OPERATIONAL AT ALL TIMES. THE PROGRESS OF CONSTRUCTION MUST NOT HINDER OR IMPEDE THE OPERATIONS OF THE COLLEGE.
10. THE BUILDING SHALL BE KEPT CLEAN AND FREE OF DEBRIS, DUST, DIRT, MUD, CONSTRUCTION MATERIALS, EQUIPMENT, ETC. AT ALL TIMES.
11. CONTRACTOR SHALL MAINTAIN ALL BUILDING SYSTEMS INCLUDING, BUT NOT LIMITED TO; LIGHTING, POWER, COMMUNICATIONS (VOICE/DATA), HEAT, CONDITIONING VENTILATION, FIRE DETECTION, FIRE SUPPRESSION AND LIFE SAFETY. CARE SHALL BE TAKEN NOT TO SEVER LIVE SYSTEMS WHICH MAY PASS THROUGH AREAS OF WORK.
12. CONTRACTOR SHALL MAINTAIN A SAFE PUBLIC ACCESS PATH DURING THE DURATION OF CONSTRUCTION ACTIVITIES. IN THE EVENT THAT THE WORK OF AN AREA OF FLOORING IS STAGED SUCH THAT PRESENTS AN UNSAFE CONDITION TO EITHER FULLY MOBILE OR IMPAIRED PERSONS, THE CONTRACTOR WILL BE REQUIRED TO PROVIDE BARRICADES AND/OR TEMPORARY MEASURES SO AS TO ACHIEVE AND MAINTAIN A SAFE CONDITION.
13. CONTRACTOR SHALL PROTECT ALL DISTRICT EQUIPMENT WHILE WORKING AROUND IT.
14. A HARD CONSTRUCTION BARRIER IS TO BE USED IN ALL AREAS WHICH INVOLVE DEMOLITION OR NEW WORK. CONTRACTOR SHALL NOT ANCHOR INTO THE EXISTING CEILING GRID.
15. AREAS OF WORK WHICH CREATE DUST, DEBRIS, OFFENSIVE ODORS, OR EXCESSIVE NOISE (SUCH AS DEMOLITION WORK, OR FLOOR GRINDING) SHALL BE COMPLETELY ENVIRONMENTALLY SEPARATED FROM OCCUPIED AREAS.
16. MAINTAIN MINIMUM 4'-0" CLEAR PASSAGEWAY FOR ELEVATOR AND EGRESS ACCESS AT ALL TIMES.

KEYNOTES - PLAN

NOTE: NOT ALL KEYNOTES APPLY TO ALL PLANS

1. (E) FLOORING TO BE REMOVED
1A. (E) FLOORING AT LOBBY, CORRIDORS, STAIRS & VESTIBULE TO BE REMOVED
2. (E) HANDRAIL TO BE REMOVED
3. (E) BLINDS TO BE REMAIN, PROTECT
4. (E) BLINDS TO BE REMOVED
5. DEMO (E) GYP BD WALL AS NEEDED TO PROVIDE BACKINGS
5a. DEMO (E) SHEER WALL AS NEEDED TO PROVIDE BACKING - SEE DETAIL 8/A842 + 6/A842 FOR RE-NAILING SHEETING
6. DEMO (E) WALL AS NEEDED TO INSTALL (N) WALL
7. (E) FLOORING TO BE REMOVED - BEADBLAST FLOOR TO REMOVE ANY GLUE FROM FLOORING, PREP CONCRETE TO BE SEALED
8. (E) WOOD WALL PANELS/ CEILING TO BE PROTECTED (ALTERNATE WHITE WASH PANELS)
9. GUT SLAB ON GRADE FOR PLUMBING/ ELECTRICAL EQUIPMENT. SED & SPD
10. GRIND DOWN CONCRETE SLOPE TO BE LEVEL WITH THE SLAB
51. DEMO WALL FOR NEW LOUVER - SEE RCP
52. (E) MECHANICAL UNIT TO REMAIN
53. BEAD BLAST EXISTING CONCRETE FLOOR. LEVEL FLOOR WITH FLOOR LEVELER. CONTRACTOR TO REVIEW DISTRICT AS-BUILTS FOR SLOPED FLOOR THROUGHT THIS AREA. PREP FLOOR TO BE SEALED.
54. ~~ADD ALT #4, PER GENERAL COMMENT ON SHEET A021. WITHIN LIMIT OF WORK PROVIDE AS FOLLOWS IF CORRIDOR ELEMENTS DOES NOT MEET 1 HR RATED CORRIDOR, THE CONCEPT IS TO PROVIDE A RATED TUNEL1 CORRIDOR.~~
   - ~~REMOVE EACH NON RATED DOOR/ FRAME & PROVIDE (N) 20 MIN RATED DOOR/FRAME, HARDWARE TO MATCH AS FOLLOWS.~~
     - ~~CLASSROOM DOORS - TO MATCH DOOR 201A~~
     - ~~STORAGE DOORS - TO MATCH DOOR 231~~
     - ~~OFFICE DOORS - TO MATCH DOOR 231~~
   - ~~REMOVE NON-RATED GYP BD FROM WALL FRAME W/ TYPE 'F' WALL. SILL PER DETAIL 11/A841~~
     - ~~ALTERNATIVELY INSTEAD OF REPLACING THE GYP BD, ADD ADDITIONAL LAYER OF 1/2" TYPE 'X' GYP BD (V) (E), ON EACH SIDE.~~
   - ~~REMOVE NON RATED GLASS/ FRAME AND PROVIDE 45 MIN GLAZING/ FRAME~~
   - ~~REMOVE CEILING AND REPLACE WITH GYP BD CEILING, SEE DETAIL 17/A841 SIM~~
   - ~~NEW SURFACE MOUNTED LIGHT FIXTURE SIM TO 2ND FLOOR, LOCATION TO BE THE SAME.~~
55. DEMO WALL AS REQUIRED FOR INSTALLATION OF CHAIR RAIL BACKING
56. PROTECT FLOORING
57. BUSH (E) CONCRETE AS NEEDED TO INSTALL TILE FLUSH WITH (E) TILE. REMOVE THESE ITEMS AND TURN OVER TO THE DISTRICT: TACK/ WHITE BOARDS, PROJECTOR SCREEN, AV EQUIP & SPEAKERS

(E) DOOR TO BE REMOVED
(E) WINDOW TO BE REMOVED
(x) = (D) DEMOLITION
(R) REMOVE AND/OR RELOCATE
(E) EXISTING TO REMAIN - PROTECT
(-) NEW
(x) = DOOR
(x) = WINDOW SEE WINDOW SCHEDULE SHEET
(x) FC = FIRE EXTINGUISHER CABINET
(x) = THERMOSTAT
(x) AA = AUTO ASSIST DOOR
(x) FA = FIRE HORN/ STROBE
(x) = DATA
(x) = POWER
(x) SP = SECURITY PANEL
= DRINKING FOUNTAIN
(x) DF

AREA NOT IN SCOPE
(E) LANDSCAPE (NC)

EXISTING
(E) SHEAR WALL TO REMAIN
(E) FRAMED WALL TO REMAIN
(E) CONCRETE WALL TO REMAIN
(E) CASEWORK TO REMAIN - PROTECT

DEMOLITION
DEMO NON-STRUCTURAL PARTITION WALL
CASEWORK TO BE REMOVED PATCH AND REPAIR WALL AS REQUIRED

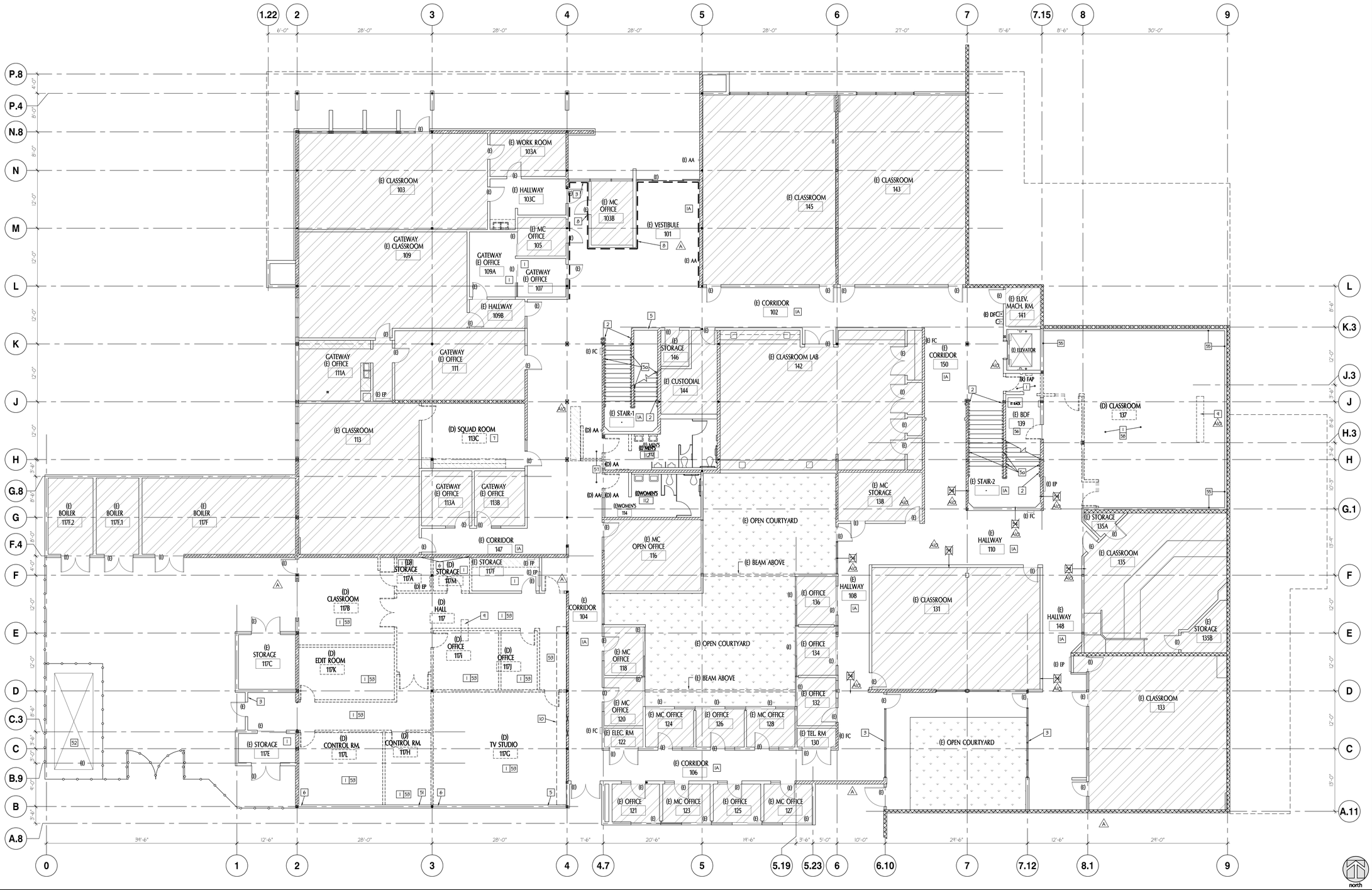

FIRST FLOOR PLAN - DEMOLITION

SCALE: 1/8"= 1'-0"

1

tBP
architecture
planning
interiors

tBP/Architecture
1777 Oakland Boulevard, Suite 320
Walnut Creek, CA 94596
ph: 925.246.6419

architect

consultant

IDENTIFICATION STAMP
DIV. OF THE STATE ARCHITECT
OFFICE OF REGULATION SERVICES
APPL # 01-116617
FILE NO. 7-C1
AC KS SS
DATE

DIVISION OF THE STATE ARCHITECT
1515 CLAY STREET
OAKLAND, CA94612
ph:(510) 622-3101

agency

C-4008 APPLIED ARTS & ADMIN RENOVATION

2600 MISSION BELL DRIVE, SAN PABLO, CA 94806

CONTRA COSTA COMMUNITY COLLEGE DISTRICT
500 COURT STREET MARTINEZ, CA 94553

owner

tBP project number:	20865.00
file name:	A111_DEMO 1ST.DWG
drawn by:	checked by:
date:	APRIL 20, 2019

rev:	date:	description:
	8/17/2017	BID SET
1	04/21/17	ADDENDUM A
1A	03/16/18	ASI 10
	04/20/2019	RECORD SET

THIS DRAWING AND THE DESIGNS, DEFINITIONS, IDEAS AND OTHER INFORMATION CONTAINED HEREIN CONSTITUTE UNPUBLISHED WORK OF tBP/ARCHITECTURE AND SHALL REMAIN PROPERTY OF tBP/ARCHITECTURE IN PERPETUITY. NO PART THEREOF SHALL BE REPRODUCED, PRODUCED, DISTRIBUTED, SOLD, PUBLISHED OR OTHERWISE USED IN ANY WAY WITHOUT THE ADVANCED EXPRESS WRITTEN CONSENT OF tBP/ARCHITECTURE.

drawing title:
FIRST FLOOR PLAN DEMOLITION

drawing no.:
A111

drawing of

Record Dwgs

GENERAL NOTES

1. REFER TO OTHER DISCIPLINE'S DOCUMENTS FOR ADDITIONAL DEMOLITION SCOPE, INCLUDING BUT NOT LIMITED TO LIGHT FIXTURES, DUCTWORK, CABLE TRAYS, RACEWAYS ETC. COORDINATE WITH M.E.P., FIRE ALARM, AND TELECOM DRAWINGS.
2. WHERE DOUBLE-SWING/ SINGLE DOORS AND/OR SLIDING DOORS ARE DEMO'D WITH IN-GROUND DOOR HARDWARE, REMOVE IN-GROUND DOOR HARDWARE. FILL WITH NON-SHRINK GROUT., REFER TO DETAIL 3/A822
3. ITEMS LISTED BELOW SHALL BE SALVAGE AND DELIVERED TO BUILDINGS AND GROUNDS:
   - WHITE BOARD & TACKBOARDS
   - PROJECTOR MOUNTS AND SCREENS
   - WALL MOUNTED FIRE EXTINGUISHERS
   - CLOCKS
   - TELEVISIONS
   - SPEAKERS
   - CAMERAS
   - LIGHT FIXTURES
   - LOCKERS
   - CEILING WOOD PANELING
4. ALL WINDOW COVERING WITHIN SCOPE OF WORK SHALL BE REMOVED. U.N.O
5. PRIOR TO START OF DEMOLITION, CONTRACTOR TO WALK SCOPE OF WORK AREA WITH DISTRICT AND BUILDING/GROUNDS, COORDINATE AND DETERMINE ITEMS TO BE SALVAGED AND DELIVERED TO COLLEGE, OR TO BE DISPOSED IF NOT NEEDED.
6. ITEMS (TO REMAIN) LISTED BELOW SHALL BE PROTECT FROM DAMAGE DURING CONSTRUCTION PERIOD.
   - STOREFRONTS
   - WINDOWS
   - DOORS
   - FLOOR FINISHES
   - WALL FINISHES
   - CEILINGS
7. THE SECOND FLOOR OF THIS BLDG IS A 1 HOUR CONSTRUCTION. CONTRACTOR MUST REMOVE THE GYP BD TO PROVIDE BLOCKING FOR BOTH 1ST AND 2ND FLOOR WALLS AND/OR ANY OTHER CONSTRUCTION. SOME NOT IN SCOPE AREAS WILL NEED TO BE ACCESSED DURING CONSTRUCTION, COORDINATE WITH COLLEGE FOR ACCESSIBILITY. REPAIR ALL DEMOLITION
8. WHERE FLOORING TO BE SEALED, PREP FLOOR TO BE BEAD BLASTED
9. THE BUILDING MUST BE FULLY OPERATIONAL AT ALL TIMES. THE PROGRESS OF CONSTRUCTION MUST NOT HINDER OR IMPEDE THE OPERATIONS OF THE COLLEGE.
10. THE BUILDING SHALL BE KEPT CLEAN AND FREE OF DEBRIS, DUST, DIRT, MUD, CONSTRUCTION MATERIALS, EQUIPMENT, ETC. AT ALL TIMES.
11. CONTRACTOR SHALL MAINTAIN ALL BUILDING SYSTEMS INCLUDING, BUT NOT LIMITED TO; LIGHTING, POWER, COMMUNICATIONS (VOICE/DATA), HEAT, CONDITIONING VENTILATION, FIRE DETECTION, FIRE SUPPRESSION AND LIFE SAFETY. CARE SHALL BE TAKEN NOT TO SEVER LIVE SYSTEMS WHICH MAY PASS THROUGH AREAS OF WORK.
12. CONTRACTOR SHALL MAINTAIN A SAFE PUBLIC ACCESS PATH DURING THE DURATION OF CONSTRUCTION ACTIVITIES. IN THE EVENT THAT THE WORK OF AN AREA OF FLOORING IS STAGED SUCH THAT PRESENTS AN UNSAFE CONDITION TO EITHER FULLY MOBILE OR IMPAIRED PERSONS, THE CONTRACTOR WILL BE REQUIRED TO PROVIDE BARRICADES AND/OR TEMPORARY MEASURES SO AS TO ACHIEVE AND MAINTAIN A SAFE CONDITION.
13. CONTRACTOR SHALL PROTECT ALL DISTRICT EQUIPMENT WHILE WORKING AROUND IT.
14. A HARD CONSTRUCTION BARRIER IS TO BE USED IN ALL AREAS WHICH INVOLVE DEMOLITION OR NEW WORK. CONTRACTOR SHALL NOT ANCHOR INTO THE EXISTING CEILING GRID.
15. AREAS OF WORK WHICH CREATE DUST, DEBRIS, OFFENSIVE ODORS, OR EXCESSIVE NOISE (SUCH AS DEMOLITION WORK, OR FLOOR GRINDING) SHALL BE COMPLETELY ENVIRONMENTALLY SEPARATED FROM OCCUPIED AREAS.
16. MAINTAIN MINIMUM 4'-0" CLEAR PASSAGEWAY FOR ELEVATOR AND EGRESS ACCESS AT ALL TIMES.

KEYNOTES - PLAN

NOTE: NOT ALL KEYNOTES APPLY TO ALL PLANS

1. (E) FLOORING TO BE REMOVED
1A. (E) FLOORING AT LOBBY, CORRIDORS, STAIRS & VESTIBULE TO BE REMOVED
2. (E) HANDRAIL TO BE REMOVED
3. (E) BLINDS TO BE REMAIN, PROTECT
4. (E) BLINDS TO BE REMOVED
5. DEMO (E) GYP BD WALL AS NEEDED TO PROVIDE BACKINGS
5a. DEMO (E) SHEER WALL AS NEEDED TO PROVIDE BACKING - SEE DETAIL 8/A842 + 6/A842 FOR RE-NAILING SHEETING
6. DEMO (E) WALL AS NEEDED TO INSTALL (N) WALL
7. (E) FLOORING TO BE REMOVED - BEADBLAST FLOOR TO REMOVE ANY GLUE FROM FLOORING, PREP CONCRETE TO BE SEALED
8. (E) WOOD WALL PANELS/ CEILING TO BE PROTECTED (ALTERNATE WHITE WASH PANELS)
9. GUT SLAB ON GRADE FOR PLUMBING/ ELECTRICAL EQUIPMENT. SED & SPD
10. GRIND DOWN CONCRETE SLOPE TO BE LEVEL WITH THE SLAB
51. (D) PROJECTOR - TURN OVER TO BUILDING & GROUNDS
52. REMOVE (E) GYP BD FROM ENTIRE LENGTH OF (E) WALL. REPLACE WITH NEW GYP BD
53. (E) KITCHEN EQUIPMENT TO BE REMOVE. INCLUDING ALL PLUMBING/ GAS/ ELECTRICAL UTILITIES
54. (E) LOCKERS TO BE REMOVED INCLUDING THE CONCRETE CURB. LOCKERS TO BE TURNED OVER TO BUILDING AND GROUNDS
55. (E) RAISED PLATFORM TO BE REMOVED
56. (E) ROTATING DOOR TO BE REMOVED
57. (E) PASS THRU EQUIPMENT TO BE REMOVED
58. (E) LOCKERS TO BE REMOVED, DELIVER TO CAMPUS
59. (D) BUILT-IN / WALK-IN REFRIGERATOR, INCLUDING ALL PLUMBING, ELECTRICAL, RAISED FLOOR, ETC
60. (E) DENTAL EQUIPMENT FROM WALLS AND CEILING TO BE REMOVED
61. (E) GLAZING TO BE REMOVED. PROTECT (E) FRAME
62. (E) FLOORING TO BE REMOVED, REPAIR CONCRETE FLOORING, REMOVE ALL DRAINS
63. (E) CONEX BOX TO BE REMOVED, INCLUDING ALL CONTENTS INSIDE AND ALL EXTERIOR CONDUITS. REPAIR ASPHALT AS NEEDED.
64. REMOVE (E) MECHANICAL FAN FROM (E) WINDOW SYSTEM, PROTECT SURROUNDING WINDOW SYSTEM
65. REMOVE ALL (E) EQUIPMENT AT BOTH SIDE OF THE WALL. STORE AND REINSTALL ALL EQUIPMENT AFTER INSTALLATION OF NEW GYP BD AND BATT INSULATION. DO NOT TOUCH ANY FIRE ALARM EQUIPMENT.
66. REMOVE (E) HOOD. INCLUDING MECHANICAL, DUCT, ELECTRICAL

= (E) DOOR TO BE REMOVED
= (E) WINDOW TO BE REMOVED

(x) = (D) DEMOLITION
(R) REMOVE AND/OR RELOCATE
(E) EXISTING TO REMAIN - PROTECT
(-) NEW

(x) = DOOR
(x) = WINDOW SEE WINDOW SCHEDULE SHEET
(x) FC = FIRE EXTINGUISHER CABINET
(x) = THERMOSTAT
(x) AA = AUTO ASSIST DOOR
(x) FA = FIRE HORN/ STROBE
(x) = DATA
(x) = POWER
(x) SP = SECURITY PANEL
= DRINKING FOUNTAIN
(x) DF

AREA NOT IN SCOPE
(E) LANDSCAPE (NIC)

EXISTING
(E) SHEAR WALL TO REMAIN
(E) FRAMED WALL TO REMAIN
(E) CONCRETE WALL TO REMAIN
(E) CASEWORK TO REMAIN - PROTECT

DEMOLITION
DEMO NON-STRUCTURAL PARTITION WALL
CASEWORK TO BE REMOVED PATCH AND REPAIR WALL AS REQUIRED

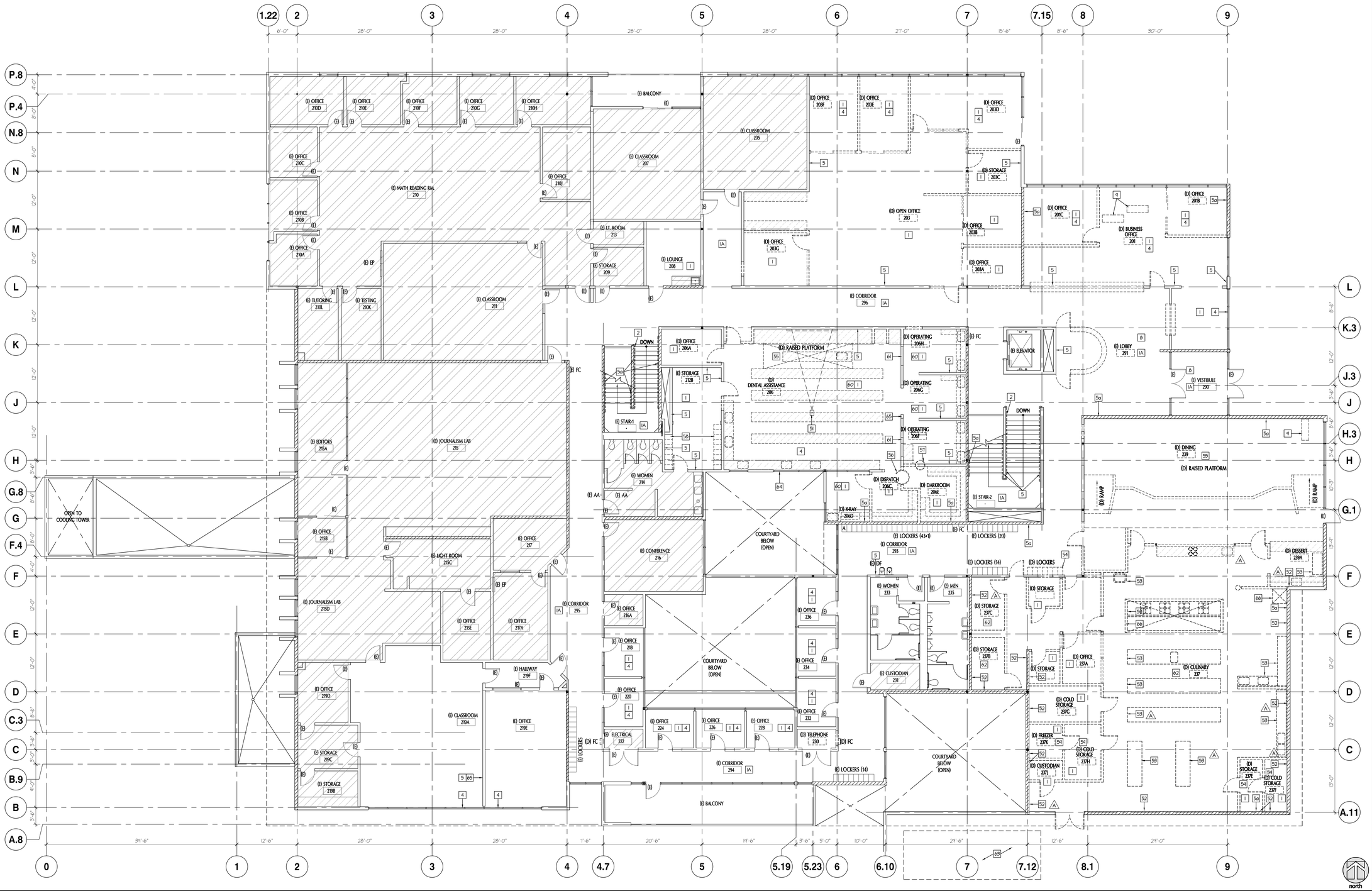

SECOND FLOOR PLAN - DEMOLITION

SCALE: 1/8"= 1'-0"

1

tBP
architecture
planning
interiors

tBP/Architecture
1777 Oakland Boulevard, Suite 320
Walnut Creek, CA 94596
ph: 925.248.8419

architect

consultant

IDENTIFICATION STAMP
DIV. OF THE STATE ARCHITECT
OFFICE OF REGULATION SERVICES
APPL # 01-116617
FILE NO. 7-C1
AC KS SS
DATE

DIVISION OF THE STATE ARCHITECT
1515 CLAY STREET
OAKLAND, CA94612
ph:(510) 622-3101

agency

C-4008 APPLIED ARTS & ADMIN RENOVATION
2600 MISSION BELL DRIVE, SAN PABLO, CA 94806

CONTRA COSTA COMMUNITY COLLEGE DISTRICT
500 COURT STREET MARTINEZ, CA 94553

owner

tBP project number:	20865.00
file name:	A121_DEMO 2ND.DWG
drawn by:	checked by:
date:	APRIL 20, 2019

rev:	date:	description:
	8/17/2017	BID SET
1	04/21/17	ADDENDUM A
	04/20/2019	RECORD SET

THIS DRAWING AND THE DESIGNS, DEFINITIONS, IDEAS AND OTHER INFORMATION CONTAINED HEREIN CONSTITUTE UNPUBLISHED WORK OF tBP/ARCHITECTURE AND SHALL REMAIN PROPERTY OF tBP/ARCHITECTURE IN PERPETUITY. NO PART THEREOF SHALL BE REPRODUCED, DISCLOSED, DISTRIBUTED, SOLD, PUBLISHED OR OTHERWISE USED IN ANY WAY WITHOUT THE ADVANCED EXPRESS WRITTEN CONSENT OF tBP/ARCHITECTURE.

drawing title:
SECOND FLOOR PLAN DEMOLITION

drawing no.:
A121

drawing of

Record Dwgs

KEYNOTES

1. (E) WALKWAY PADS
2. (E) ROOF HATCH
3. REMOVE (E) EXHAUST FANS, PROTECT NEARBY ROOFING MEMBRANE TERMINATION. PROVIDE NEW METAL CAP SHEET, SEE DETAIL 2/A231
   ALTERNATIVE OPTION: REMOVE SLEEPER AND REPAIR ROOF TO MATCH (E) ROOF SYSTEM
4. (E) SLEEPERS TO REMAIN
5. REMOVE (E) CONDENSING UNIT, (SEE SHEET A231 FOR ADDITIONAL INFORMATION). PROVIDE NEW METAL CAP SHEET, SEE DETAIL 2/A231
   ALTERNATIVE OPTION: REMOVE SLEEPER AND REPAIR ROOF TO MATCH (E) ROOF SYSTEM
6. (E) MECHANICAL UNITS TO REMAIN, PROTECT
7. (E) ROOF DRAIN - PROTECT, TYP.
8. REMOVE EXISTING DUCTWORK AND SUPPORTS. PATCH AND REPAIR ROOF PENETRATIONS
9. DEMO (E) ROOF AS REQUIRED TO INSTALL MECHANICAL UNITS AND SLEEPERS

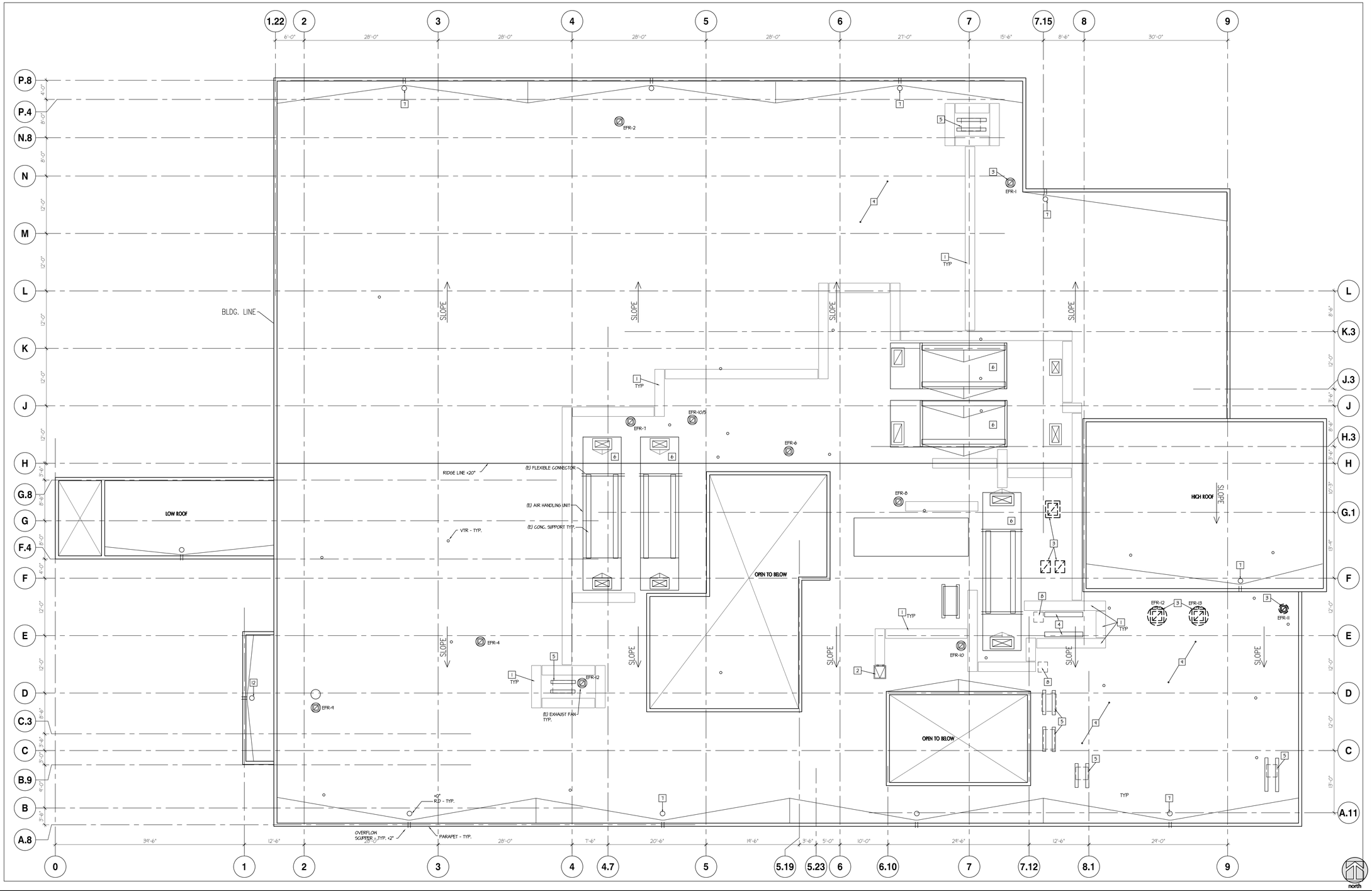

ROOF PLAN DEMOLITION

SCALE: 1/8"= 1'-0"

1

tBP
architecture
planning
interiors

tBP/Architecture
1777 Oakland Boulevard, Suite 320
Walnut Creek, CA 94596
ph: 925.246.6419

architect

consultant

DEPARTMENTAL STAMP
DIV. OF STATE ARCHITECT
OFFICE OF REGULATION SERVICES
APPL # 01-116817
FILE NO. 7-C1
AC FLS SS
DATE

DIVISION OF THE STATE ARCHITECT
1515 CLAY STREET
OAKLAND, CA94612
ph:(510) 622-3101

agency

C-4008 APPLIED ARTS & ADMIN RENOVATION

2600 MISSION BELL DRIVE, SAN PABLO, CA 94806

CONTRA COSTA COMMUNITY COLLEGE DISTRICT
500 COURT STREET MARTINEZ, CA 94553

owner

tBP project number:	20865.00
file name:	A131_ ROOF DEMO.DWG
drawn by:	checked by:
date:	APRIL 20, 2019

rev:	date:	description:
	8/17/2017	BID SET
	04/20/2019	RECORD SET

THIS DRAWING AND THE DESIGNS, DEPICTIONS, IDEAS AND OTHER INFORMATION CONTAINED HEREIN CONSTITUTES UNPUBLISHED WORK OF tBP/ARCHITECTURE AND SHALL REMAIN PROPERTY OF tBP/ARCHITECTURE IN PERPETUITY. NO PART THEREOF SHALL BE REPRODUCED, DISCLOSED, DISTRIBUTED, SOLD, PUBLISHED OR OTHERWISE USED IN ANY WAY WITHOUT THE ADVANCED EXPRESS WRITTEN CONSENT OF tBP/ARCHITECTURE.

drawing title:

ROOF PLAN DEMOLITION

drawing no.:

A131

drawing of

Record Dwgs

GENERAL NOTES

1. (E) CEILINGS AT CORRIDORS AND VESTIBULES SHALL REMAIN - PROTECT IN PLACE
2. SALVAGE ALL LIGHTING FIXTURE BEING DEMOLISHED AND DELIVER TO BUILDINGS AND GROUNDS
3. IF ANY OF THE EXISTING CEILING GRID SYSTEM IS CUT OR ALTERED, THE ENTIRE CEILING SHALL BE UPGRADED TO MEET THE CURRENT REQUIREMENT OF THE 2016 CBC, DSA IR 25-2.16 & DSA IR 25-3.16
4. ADD ALT 3B: AT FIRST FLOOR REPLACE CEILINGS TILE AT THE CORRIDOR, LOBBY AND VESTIBULE, AT THE SECOND FLOOR REPLACE WITH FIRE GUARD RATED CEILINGS TILE AND BATT PER DETAIL 10/A912. SEE DETAIL 15/A511 FORDELINIATION OF THESE AREAS.

DEMO KEYNOTES · CEILING

NOTE: NOT ALL KEYNOTES APPLY TO ALL RCP

1. WITHIN LIMIT OF WORK IN THIS AREA - REMOVE ALL (E) CEILINGS, LIGHT FIXTURE, MECHANICAL DUCTS AND REGISTERS, U.N.O.
2. (E) CEILING TO REMAIN - PROTECT
2A. (E) CEILING TO REMAIN - DO NOT REMOVE PARTIAL CEILING TO PROVIDE DEMO &/OR CONSTRUCTION ABOVE. REPLACE/ REPAIR CEILINGS TILE AFTER COMPLETION OF WORK ABOVE. SEE MECHANICAL, ELECTRICAL AND TELECOM DWGS
3. REMOVE ALL (E) CEILINGS, LIGHT FIXTURE & MECHANICAL REGISTERS
4. WITHIN LIMIT OF WORK IN THIS AREA - (E) DOUBLE HEIGHT HARD LID CEILING TO REMAIN , REMOVE (E) LOW CEILINGS, LIGHT FIXTURE AND FRAMES (BOTH @ LOW & HIGH CEILINGS), MECHANICAL DUCT AND REGISTERS. REPAIR ANY DAMAGE
5. REMOVE ALL (E) CEILING AND LIGHT FIXTURE MECH. DUCTS TO RE-ROUTED - SMD
6. (E) EQUIPMENT AT THIS WALL TO BE REMOVED AND REINSTALLED WITH EXTENSION RINGS TO ACCOMMODATE THICKNESS OF ACOUSTICAL PANELS
7. (E) MECHANICAL DUCT REGISTER TO BE REMOVED AND PREPARED FOR EXTENSION.
8. (E) MECHANICAL DUCT TO REMAIN - PROTECT
9. (E) SOFFIT FRAMING TO BE REMOVED
10. (E) SOFFIT FRAMING TO REMAIN, PROTECT IN PLACE, BRACE AS NECESSARY
11. (E) SOFFIT TO BE PARTIALLY REMOVED, NEW SOFFIT HEIGHT AT 1" BELOW (E) LAY-IN CEILING
12. (E) GYP BD SOFFIT HOOD TO BE PARTIALLY REMOVED. REMOVE (E) HOOD EQUIPMENT. LEAVE GYP BD FRAMING 1" BELOW (E) CEILING
13. (E) HIGH GYP BD CEILING TO BE REMOVED. INCLUDING LIGHT FIXTURES AND FRAMING SUPPORTS
14. REMOVE (E) WOOD TRIM, (E) GYP BOARD ABOVE TO REMAIN
15. CAREFULLY REMOVE CEILING TILES TO ALLOW DEMOLITION &/OR CONSTRUCTION AS NOTED. REINSTALL CEILING TILES AFTER COMPLETION. DO NOT MODIFY LAY-IN CEILING
16. (E) KITCHEN EQUIPMENT (HOOD) TO BE REMOVED INCLUDING ANY TYPE OF SUPPRESSION SYSTEM. REMOVE AND DISPOSE IN ACCORDANCE WITH ALL LOCAL, STATE & FEDERAL REGULATIONS.
17. REMOVE (E) GYPSUM BOARD ONLY AT CEILING
18. (E) VESTIBULE TO PROTECT

EXISTING	DEMO
(E) CEILING COFFER TO REMAIN	~~(E) CEILING COFFER TO REMAIN~~
LIGHTING FIXTURES	
(E) INDICATES FIXTURE TO REMAIN	(D) DASHED LINE INDICATES FIXTURE TO BE REMOVED

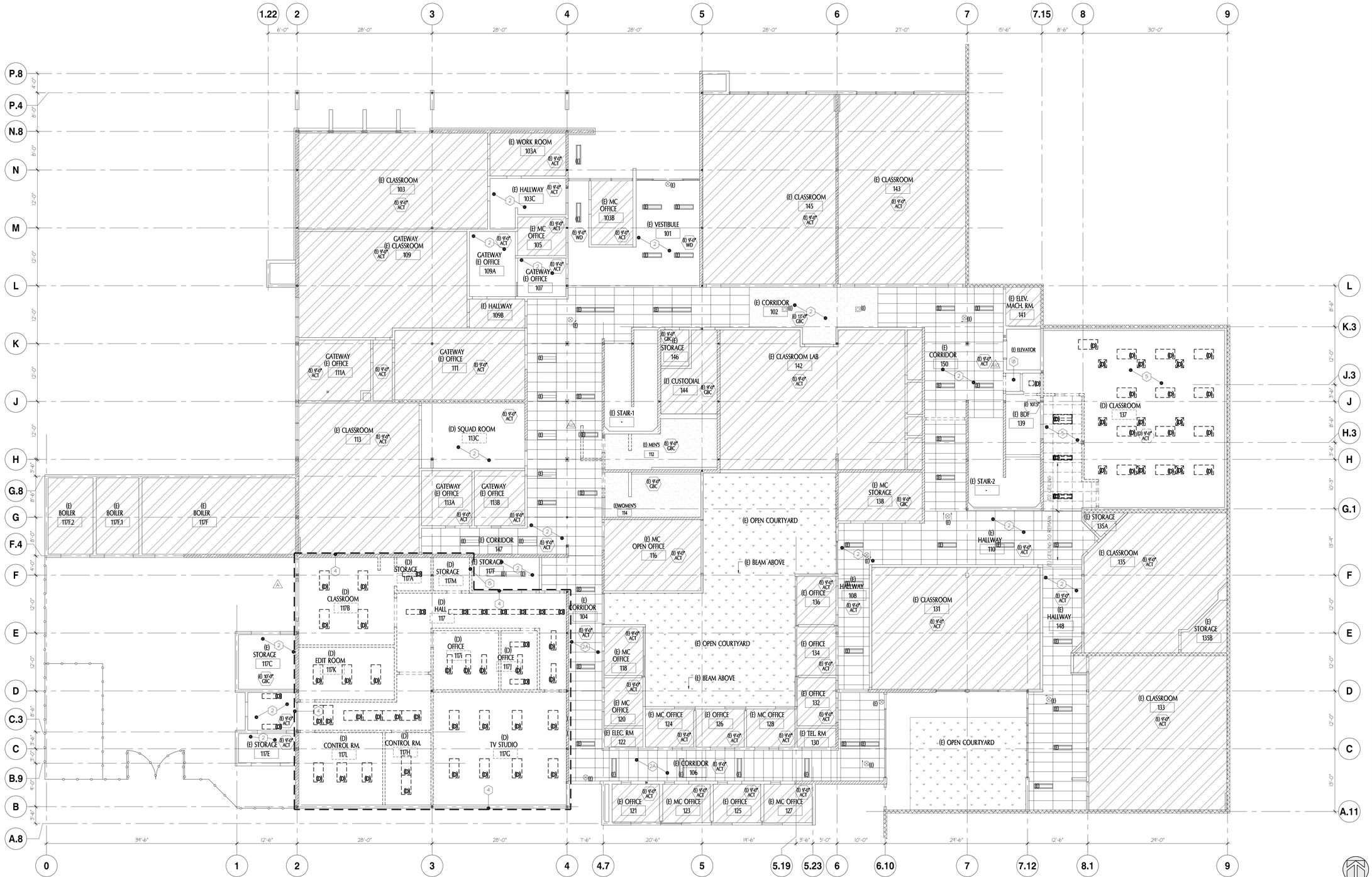

FIRST FLOOR RCP PLAN · DEMOLITION

SCALE: 1/8"= 1'-0"

1

tBP architecture planning interiors

tBP/Architecture
1777 Oakland Boulevard, Suite 320
Walnut Creek, CA 94596
ph: 925.248.8419

architect

consultant

IDENTIFICATION STAMP
DIV. OF THE STATE ARCHITECT
OFFICE OF REGULATION SERVICES
APPL # 01-110617
FILE NO. 7-C1
AC ___ KS ___ SS ___
DATE

DIVISION OF THE STATE ARCHITECT
1515 CLAY STREET
OAKLAND, CA94612
ph:(510) 622-3101

agency

C-4008 APPLIED ARTS & ADMIN RENOVATION

2600 MISSION BELL DRIVE, SAN PABLO, CA 94806

CONTRA COSTA COMMUNITY COLLEGE DISTRICT
500 COURT STREET MARTINEZ, CA 94553

owner

tBP project number:	20865.00
file name:	A141_DEMO 1ST.DWG
drawn by:	checked by:
date:	APRIL 20, 2019

rev:	date:	description:
	8/17/2017	BID SET
A	04/21/17	ADDENDUM A
A10	03/16/18	ASI 10
	04/20/2019	RECORD SET

THIS DRAWING AND THE DESIGNS, DEPICTIONS, IDEAS AND OTHER INFORMATION CONTAINED HEREIN CONSTITUTE UNPUBLISHED WORK OF tBP/ARCHITECTURE AND SHALL REMAIN PROPERTY OF tBP/ARCHITECTURE IN PERPETUITY. NO PART THEREOF SHALL BE REPRODUCED, DISCLOSED, DISTRIBUTED, SOLD, PUBLISHED OR OTHERWISE USED IN ANY WAY WITHOUT THE ADVANCED EXPRESS WRITTEN CONSENT OF tBP/ARCHITECTURE.

drawing title:

FIRST FLOOR RCP DEMOLITION

drawing no.:

A141

drawing of

Record Dwgs

GENERAL NOTES

1. (E) CEILINGS AT CORRIDORS AND VESTIBULES SHALL REMAIN - PROTECT IN PLACE
2. SALVAGE ALL LIGHTING FIXTURE BEING DEMOLISHED AND DELIVER TO BUILDINGS AND GROUNDS
3. IF ANY OF THE EXISTING CEILING GRID SYSTEM IS CUT OR ALTERED, THE ENTIRE CEILING SHALL BE UPGRADED TO MEET THE CURRENT REQUIREMENT OF THE 2016 CBC, DSA IR 25-2.16 & DSA IR 25-3.16
4. ADD ALT 3B: AT FIRST FLOOR REPLACE CEILING TILE AT THE CORRIDOR, LOBBY AND VESTIBULE. AT THE SECOND FLOOR REPLACE WITH FIRE GUARD RATED CEILING TILE AND BATT PER DETAIL 10/A412. SEE DETAIL 15/A511 FOR DELINEATION OF THESE AREAS.

DEMO KEYNOTES · CEILING

NOTE: NOT ALL KEYNOTES APPLY TO ALL RCP

1. WITHIN LIMIT OF WORK IN THIS AREA - REMOVE ALL (E) CEILING, LIGHT FIXTURE, MECHANICAL DUCTS AND REGISTERS, U.N.O.
2. (E) CEILING TO REMAIN - PROTECT
2A. (E) CEILING TO REMAIN - DO NOT REMOVE PARTIAL CEILING TO PROVIDE DEMO &/OR CONSTRUCTION ABOVE. REPLACE/ REPAIR CEILING TILE AFTER COMPLETION OF WORK ABOVE. SEE MECHANICAL, ELECTRICAL AND TELECOM DWGS
3. REMOVE ALL (E) CEILING, LIGHT FIXTURE & MECHANICAL REGISTERS
4. WITHIN LIMIT OF WORK IN THIS AREA - (E) DOUBLE HEIGHT HARD LID CEILING TO REMAIN , REMOVE (E) LOW CEILINGS, LIGHT FIXTURE AND FRAMES (BOTH @ LOW & HIGH CEILINGS), MECHANICAL DUCT AND REGISTERS. REPAIR ANY DAMAGE
5. REMOVE ALL (E) CEILING AND LIGHT FIXTURE MECH. DUCTS TO RE-ROUTED - SMD
6. (E) EQUIPMENT AT THIS WALL TO BE REMOVED AND REINSTALLED WITH EXTENSION RINGS TO ACCOMMODATE THICKNESS OF ACOUSTICAL PANELS
7. (E) MECHANICAL DUCT REGISTER TO BE REMOVED AND PREPARED FOR EXTENSION.
8. (E) MECHANICAL DUCT TO REMAIN - PROTECT
9. (E) SOFFIT FRAMING TO BE REMOVED
10. (E) SOFFIT FRAMING TO REMAIN, PROTECT IN PLACE, BRACE AS NECESSARY
11. (E) SOFFIT TO BE PARTIALLY REMOVED, NEW SOFFIT HEIGHT AT 1" BELOW (E) LAY-IN CEILING
12. (E) GYP BD SOFFIT HOOD TO BE PARTIALLY REMOVED. REMOVE (E) HOOD EQUIPMENT. LEAVE GYP BD FRAMING 1" BELOW (E) CEILING
13. (E) HIGH GYP BD CEILING TO BE REMOVED. INCLUDING LIGHT FIXTURES AND FRAMING SUPPORTS
14. REMOVE (E) WOOD TRIM, (E) GYP BOARD ABOVE TO REMAIN
15. CAREFULLY REMOVE CEILING TILES TO ALLOW DEMOLITION &/OR CONSTRUCTION AS NOTED. REINSTALL CEILING TILES AFTER COMPLETION. DO NOT MODIFY LAY-IN CEILING
16. (E) KITCHEN EQUIPMENT (HOOD) TO BE REMOVED INCLUDING ANY TYPE OF SUPPRESSION SYSTEM. REMOVE AND DISPOSE IN ACCORDANCE WITH ALL LOCAL, STATE & FEDERAL REGULATIONS.
17. REMOVE (E) GYPSUM BOARD ONLY AT CEILING
18. (E) VESTIBULE TO PROTECT

EXISTING	DEMO
(E) CEILING COFFER TO REMAIN	

LIGHTING FIXTURES

(E) (E) INDICATES FIXTURE TO REMAIN

(D) DASHED LINE INDICATES FIXTURE TO BE REMOVED

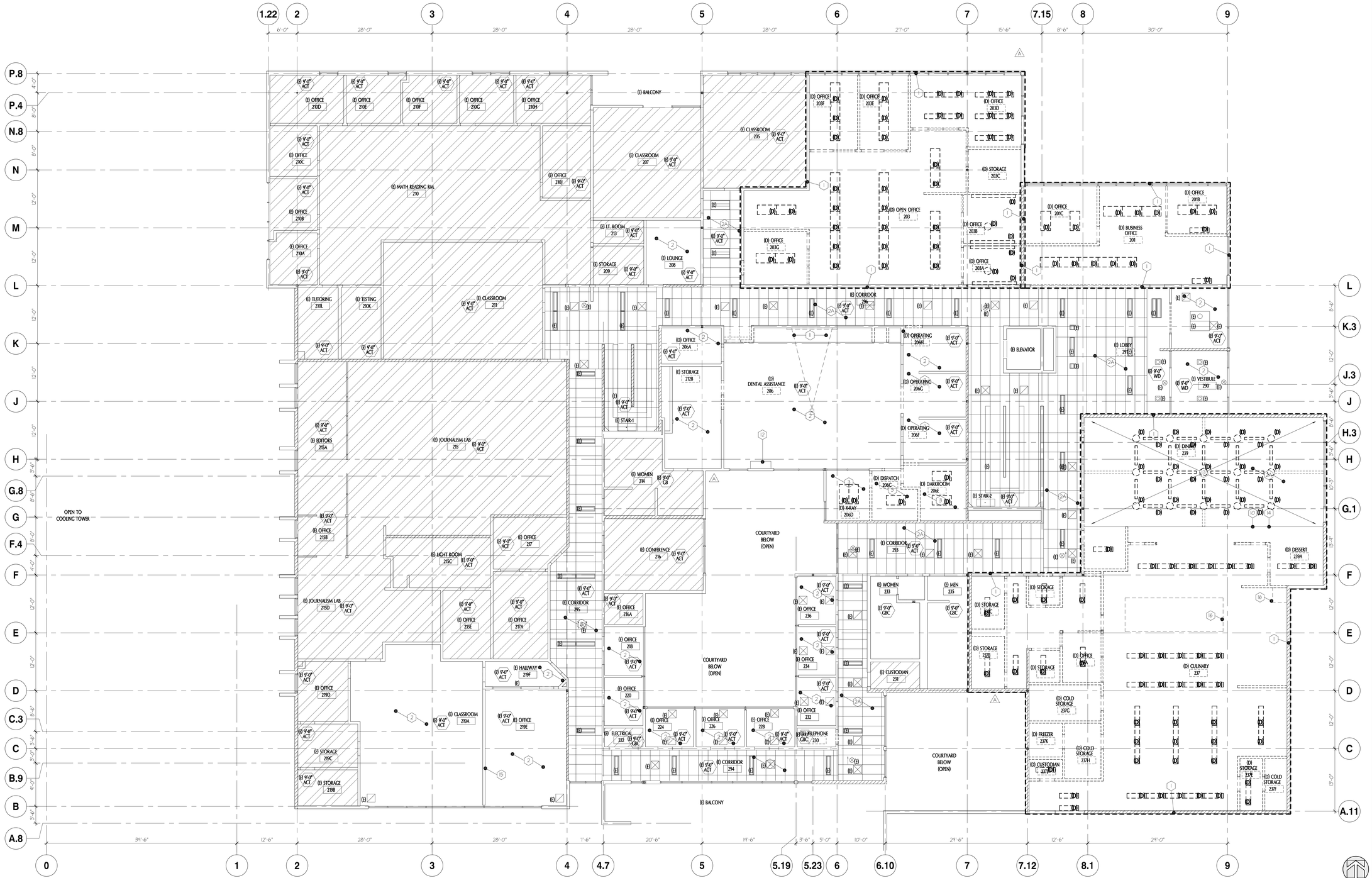

SECOND FLOOR RCP PLAN - DEMOLITION

SCALE: 1/8"= 1'-0"

1

tBP
architecture
planning
interiors

tBP/Architecture
1777 Oakland Boulevard, Suite 320
Walnut Creek, CA 94596
ph: 925.256.8419

architect

consultant

IDENTIFICATION STAMP
DIV. OF THE STATE ARCHITECT
OFFICE OF REGULATION SERVICES
APPL # 01-110617
FILE NO. 7-C1
AC FLS SS
DATE

DIVISION OF THE STATE ARCHITECT
1515 CLAY STREET
OAKLAND, CA94612
ph:(510) 622-3101

agency

C-4008 APPLIED ARTS & ADMIN RENOVATION

2600 MISSION BELL DRIVE, SAN PABLO, CA 94806

CONTRA COSTA COMMUNITY COLLEGE DISTRICT
500 COURT STREET MARTINEZ, CA 94553

owner

tBP project number:	20865.00
file name:	A151_2ND RCP DEMO.DWG
drawn by:	checked by:
date:	APRIL 20, 2019

rev:	date:	description:
	8/17/2017	BID SET
A	09/21/17	ADDENDUM A
	04/20/2019	RECORD SET

THIS DRAWING AND THE DESIGNS, DEPICTIONS, IDEAS AND OTHER INFORMATION CONTAINED HEREIN CONSTITUTE UNPUBLISHED WORK OF tBP/ARCHITECTURE AND SHALL REMAIN PROPERTY OF tBP/ARCHITECTURE IN PERPETUITY. NO PART THEREOF SHALL BE REPRODUCED, UNCLOSED, DISTRIBUTED, SOLD, PUBLISHED OR OTHERWISE USED IN ANY WAY WITHOUT THE ADVANCED EXPRESS WRITTEN CONSENT OF tBP/ARCHITECTURE.

drawing title:

SECOND FLOOR RCP DEMOLITION

drawing no.:

A151

drawing of

Record Dwgs

GENERAL NOTES

1. FOR RATED CORRIDOR LOCATION - SEE SHEET A021
2. ALL WALLS ARE FULL HEIGHT AND SHALL TERMINATE AT THE UNDERSIDE OF FLOOR/ ROOF DECK.
3. DO NOT MODIFY/ REMOVE ANY PLYWOOD AT SHEAR WALL LOCATIONS UNLESS INSTALLING BACKING
4. WHERE WORK IS ENCROACHING INTO "NOT IN SCOPE" AREAS (IE. PENETRATION, CORING, WALL FILL-IN, BLOCKING ETC). "NOT IN SCOPE" AREAS MUST BE FINISHED TO MATCH EXISTING CONDITIONS.
5. (E) CORRIDORS, LOBBIES & VESTIBULES:
   - 5.a. REMOVE ALL TACKBOARDS, SIGNAGE, PAINTINGS, ACCESSORIES (CLOCKS, PHONES, OUTLET/ SWITCH FACE PLATES, ETC), ART WORK, ETC. BEFORE PAINTING. REINSTALL AFTER
   - 5.b. WALL & CEILING WOOD PANELS OCCUR, PROTECT. DO NOT PAINT
   - 5.c. WOOD CAPS, PROTECT. DO NOT PAINT
   - 5.d. WHERE GYP BD CEILINGS OCCUR, PAINT
   - 5.e. PAINT ALL METAL DOOR/ WINDOW FRAMES (BOTH SIDES OF THE DOOR)
   - 5.f. PROTECT ALL ALUMINUM FRAMES, DO NOT PAINT
   - 5.g. PAINT ALL FIRE EXTINGUISHER CABINETS (INSIDE & OUTSIDE)
   - 5.h. PAINT METAL GUARDRAILS - MATCH COLOR WITH DOOR/WINDOW FRAMES
   - 5.i. PAINT SURFACE MOUNTED CONDUITS AND WIRE RACEWAYS
6. FOR FINISH SCHEDULE SEE SHEET A611
7. THE FLOOR/ CEILING IS 1-HR RATE AND WILL REQUIRE REPAIR AFTER BLOCKING INSTALLATION.
8. NEW CONSTRUCTION IS PER SHEET A802 (MTL STUDS). AT (E) CONSTRUCTION CONDITIONS SEE SHEET A901 (WOOD STUDS)
9. REPLACE DEMO GYP BD W/ NEW GYP BD WHERE OCCURS. REFER TO DEMO PLANS FOR LOCATION. THIS INCLUDE AREAS WHERE REMOVAL OF GYP BD AND/ OR PLYWD SHEETING TO ADD NEW BACKING

KEYNOTES - PLAN

1. (N) PATCH AND REPAIR FLOORING TO MATCH EXISTING
2. (N) HAND RAIL - SEE DETAIL 20/A842
3. (N) RESILIENT STAIR TREAD, TYP. 2" WIDE WARNING STRIPES OF 70% MIN CONTRASTING COLOR AT BOTTOM AND TOP OF TREAD OF EACH STAIR RUN
4. (N) CHAIR RAIL, LENGTH OF ENTIRE WALL, TYP - SEE DETAIL 16/A941
5. (N) ELEVATOR CONTROL BUTTON ID SEE DETAIL 1/A511
6. (N) ELEVATOR DOOR JAMB ID - SEE DETAIL 11/A511
7. (E) ELEVATOR NOTES - SEE DETAIL 16/A511
8. FILL-IN (E) WINDOW- SEE DETAIL 7/A813
9. (N) ACCESSIBLE LOCKERS, SEE DETAIL 19/A441
10. (N) WINDOW SYSTEM INFILL - SEE DETAIL 2/A813
11. AED DEFIBRILLATORS - SEE SPECS
12. (N) WING RAILS, SEE DETAIL 15/A941
13. LCD SCREEN - SEE DETAIL 7/A511
14. ADD ALT. WHITE WASH WOOD PANEL (WALL & CEILING)
15. SURFACE MOUNTED FLOOR MATS 6'-0" LONG x FULL WIDTH OF ENTRY - UNO A
51. FULL HEIGHT CHAIN LINK FENCE - POSTS AT 6' MAX - SEE DETAIL 16/A981
52. WALL OPENING @ (E) LIGHT FIXTURE - SEE DETAIL 3/A842
53. (E) MECHANICAL UNIT - TO REMAIN
56. WHERE SLAB ON GRADE IS CUT, SEE INFILL DETAIL 5/A941
58. PROJECTOR SCREENS, PROVIDE BACKING
60. REFER TO CLASSROOM 203 TO MIMIC TELECOM COMPONENTS
61. (N) INVERTER. ANCHOR PER DETAIL 1/E006 W/O CONCRETE PAD. CCD 16

81. MS - ADJUSTABLE HEAVY DUTY METAL SHELVES - 85" MIN HIGH 6 METAL SHELVES (NO PARTICLE BOARD SHELVES) (OFCI)
   - TYPE A - 48" x 24"
   - TYPE B - 48" x 18"
   - TYPE C - 36" x 18"
   - TYPE D - 36" x 24"

82. MSG. - SAFETY CABINET - FOR 1 GALLON CONTAINERS - 2 DOORS, 5 SHELVES, 60 GAL CAPACITY MIN - BASIS OF DESIGN WILRAY SAFETY CABINETS XR-1680 (42" x 20" x 61") at MATERIAL HANDLING SOLUTIONS LLC.

A10 83 ~~ADD ALT #4, PER GENERAL COMMENT ON SHEET A021: WITHIN LIMIT OF WORK PROVIDE AS FOLLOWS IF CORRIDOR ELEMENTS DOES NOT MEET 1-HR RATED CORRIDOR, THE CONCEPT IS TO PROVIDE A RATED "TUNNEL" CORRIDOR.~~
   - ~~REMOVE EACH NON-RATED DOOR/ FRAME & PROVIDE (N) 20 MIN RATED DOOR/FRAME, HARDWARE TO MATCH AS FOLLOWS:~~
     - ~~CLASSROOM DOORS - TO MATCH DOOR 201A~~
     - ~~STORAGE DOORS - TO MATCH DOOR 231~~
     - ~~OFFICE DOORS - TO MATCH DOOR 231~~
   - ~~REMOVE NON-RATED GYP BD FROM WALL FRAME W/ TYPE "F" WALL. SILL PER DETAIL 11/A841~~
     - ~~ALTERNATIVELY: INSTEAD OF REPLACING THE GYP BD, ADD ADDITIONAL LAYER OF 3/4" TYPE 'X' GYP BD ON (E). ON EACH SIDE.~~
   - ~~REMOVE NON-RATED GLASS/ FRAME AND PROVIDE 45 MIN GLAZING/ FRAME.~~
   - ~~REMOVE CEILING AND REPLACE WITH GYP BD CEILING, SEE DETAIL 17/A841 SIM~~
   - ~~NEW SURFACE MOUNTED LIGHT FIXTURE SIM TO 2ND FLOOR, LOCATION TO BE THE SAME.~~

= DOOR REFERENCE, SEE DOOR SCHEDULE, SHEET **A621**
- INDICATES FLOOR CLEARANCE SEE DETAIL **1/A621**

= INTERIOR PARTITION TYPE, SEE SHEET **A841**

= TV - WALL MOUNTED, SEE DETAIL **18/A941**

= WB = WHITE BOARD - SEE ELEVATION FOR SIZE
TB = TACKBOARD - 36"W x 48" H, MOUNTED 36" AFF, UNO

= ALIGN SURFACE OF WALL, AT BOTH SIDES

= MOP SINK

ALS (ASSISTED LISTENING DEVICE) REQUIRED IN THIS ROOM
(NUMBER = MIN. QUANTITY OF RECEIVERS REQUIRED)
ALS INSTALLED IN MTG ROOMS; OTHERS IN CONTRACT SEE SPECIFICATION

(x) = (D) DEMOLITION
(R) REMOVE AND/OR RELOCATE
(E) EXISTING TO REMAIN - PROTECT
(-) NEW

(x) = DOOR

(x) = WINDOW SEE WINDOW SCHEDULE SHEET **A621**

(x) FC = FIRE EXTINGUISHER CABINET
(x) = THERMOSTAT
(x) AA = AUTO ASSIST DOOR
(x) FA = FIRE HORN/ STROBE
(x) = DATA
(x) = POWER
(x) SP = SECURITY PANEL
= DRINKING FOUNTAIN
(x) DF

AREA NOT IN SCOPE
(E) LANDSCAPE (NC)

EXISTING
(E) SHEAR WALL TO REMAIN
(E) FRAMED WALL TO REMAIN
(E) CONCRETE WALL TO REMAIN
(E) CASEWORK TO REMAIN - PROTECT

NEW
(N) FRAMED WALL
(N) FIRE-RATED WALL PROVIDE PLACE CARD PER CBC 703.7 FIRE/SMOKE BARRIER PROTECT ALL OPENINGS
(N) SOUND-RATED WALL
(N) FIRE/SOUND-RATED WALL

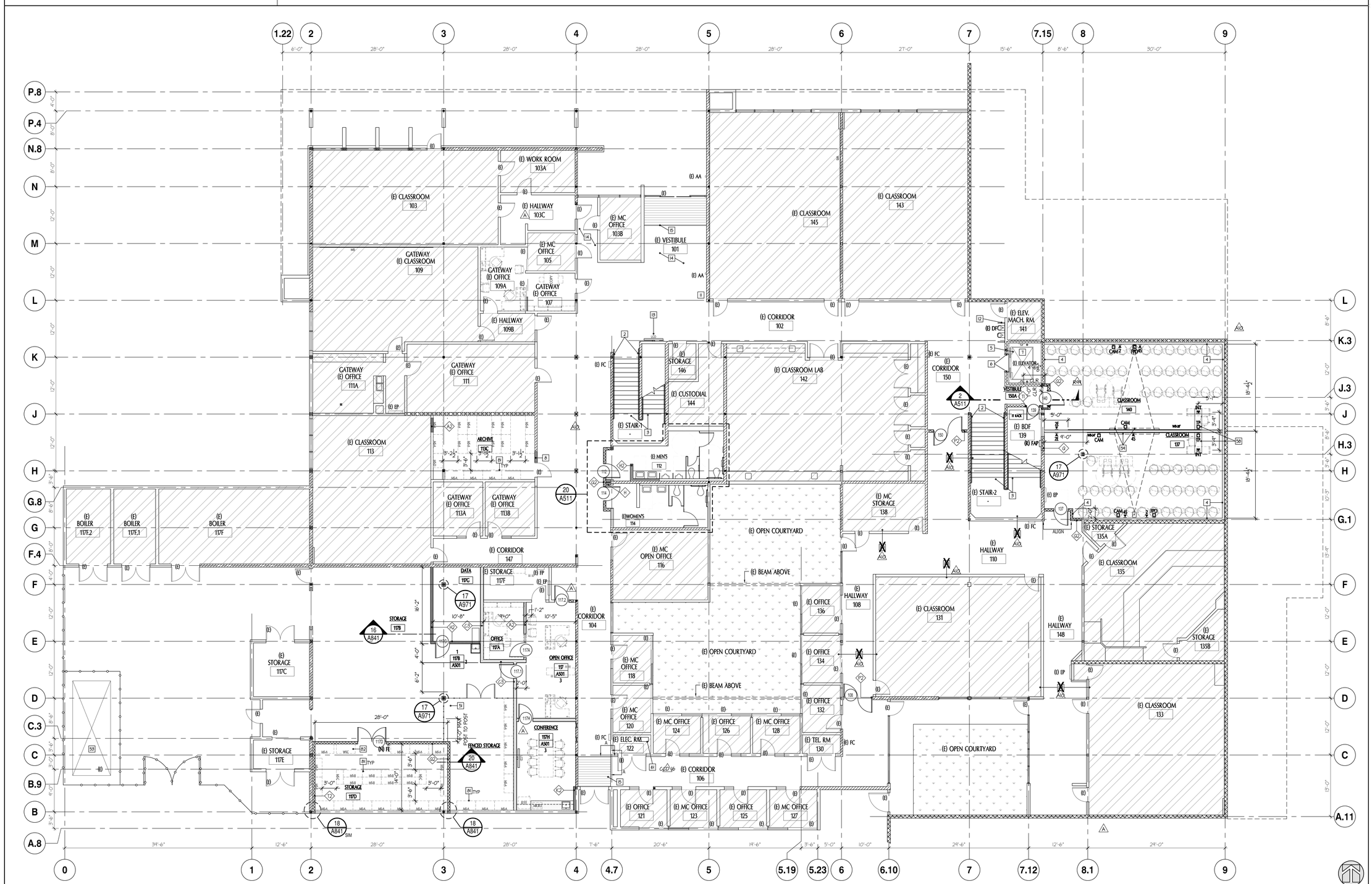

FIRST FLOOR PLAN

SCALE: 1/8"= 1'-0"

1

tBP
architecture
planning
interiors

tBP/Architecture
1777 Oakland Boulevard, Suite 320
Walnut Creek, CA 94596
ph: 925.248.8419

architect

consultant

IDENTIFICATION STAMP
DIV. OF THE STATE ARCHITECT
OFFICE OF REGULATION SERVICES
APPL # 01-118617
FILE NO. 7-C1
AC KS SS
DATE

DIVISION OF THE STATE ARCHITECT
1515 CLAY STREET
OAKLAND, CA94612
ph:(510) 622-3101

agency

C-4008 APPLIED ARTS & ADMIN RENOVATION

2600 MISSION BELL DRIVE, SAN PABLO, CA 94806

CONTRA COSTA COMMUNITY COLLEGE DISTRICT
500 COURT STREET MARTINEZ, CA 94553

owner

tBP project number:	20865.00
file name:	A211_1ST FLR.DWG
drawn by:	checked by:
date:	APRIL 20, 2019

rev:	date:	description:
	8/17/2017	BID SET
1 2		
A10	03/16/18	ASI 10
A08	06/25/18	RFI 99
CCD 16	10/02/18	CCD 16
	04/20/2019	RECORD SET

THIS DRAWING AND THE DESIGNS, DEFINITIONS, IDEAS AND OTHER INFORMATION CONTAINED HEREIN CONSTITUTE UNPUBLISHED WORK OF tBP/ARCHITECTURE AND SHALL REMAIN PROPERTY OF tBP/ARCHITECTURE IN PERPETUITY. NO PART THEREOF SHALL BE REPRODUCED, MODIFIED, DISTRIBUTED, SOLD, PUBLISHED OR OTHERWISE USED IN ANY WAY WITHOUT THE ADVANCED EXPRESS WRITTEN CONSENT OF tBP/ARCHITECTURE.

drawing title:
FIRST FLOOR PLAN

drawing no.:
A211

drawing of

Record Dwgs

GENERAL NOTES

1. FOR RATED CORRIDOR LOCATION - SEE SHEET A021
2. ALL WALLS ARE FULL HEIGHT AND SHALL TERMINATE AT THE UNDERSIDE OF FLOOR/ ROOF DECK.
3. DO NOT MODIFY/ REMOVE ANY PLYWOOD AT SHEAR WALL LOCATIONS UNLESS INSTALLING BACKING
4. WHERE WORK IS ENCROACHING INTO "NOT IN SCOPE" AREAS (IE. PENETRATION, CORING, WALL FILL-IN, BLOCKING ETC). "NOT IN SCOPE" AREAS MUST BE FINISHED TO MATCH EXISTING CONDITIONS.
5. (E) CORRIDORS, LOBBIES & VESTIBULES:
   - 5.a. REMOVE ALL TACKBOARDS, SIGNAGE, PAINTING, ACCESSORIES (CLOCKS, PHONES, OUTLET/ SWITCH FACE PLATES, ETC), ART WORK, ETC. BEFORE PAINTING. REINSTALL AFTER
   - 5.b. WALL & CEILING WOOD PANELS OCCUR, PROTECT. DO NOT PAINT
   - 5.c. WOOD CAPS, PROTECT. DO NOT PAINT
   - 5.d. WHERE GYP BD CEILINGS OCCUR, PAINT
   - 5.e. PAINT ALL METAL DOOR/ WINDOW FRAMES (BOTH SIDES OF THE DOOR)
   - 5.f. PROTECT ALL ALUMINUM FRAMES, DO NOT PAINT
   - 5.g. PAINT ALL FIRE EXTINGUISHER CABINETS (INSIDE & OUTSIDE)
   - 5.h. PAINT METAL GUARDRAILS - MATCH COLOR WITH DOOR/WINDOW FRAMES
   - 5.i. PAINT SURFACE MOUNTED CONDUITS AND WIRE RACEWAYS
6. FOR FINISH SCHEDULE SEE SHEET A611
7. THE FLOOR/ CEILING IS 1-HR RATE AND WILL REQUIRE REPAIR AFTER BLOCKING INSTALLATION.
8. NEW CONSTRUCTION IS PER SHEET A902 (MTL STUDS). AT (E) CONSTRUCTION CONDITIONS SEE SHEET A901 (WOOD STUDS)
9. REPLACE DEMO GYP BD W/ NEW GYP BD WHERE OCCURS. REFER TO DEMO PLANS FOR LOCATION. THIS INCLUDE AREAS WHERE REMOVAL OF GYP BD AND/ OR PLYWD SHEETING TO ADD NEW BACKING

KEYNOTES - PLAN

1. (N) PATCH AND REPAIR FLOORING TO MATCH EXISTING
2. (N) HAND RAIL - SEE DETAIL 20/A842
3. (N) RESILIENT STAIR TREAD, TYP. 2" WIDE WARNING STRIPES OF 70% MIN CONTRASTING COLOR AT BOTTOM AND TOP OF TREAD OF EACH STAIR RUN
4. (N) CHAIR RAIL, LENGTH OF ENTIRE WALL, TYP - SEE DETAIL 16/A941
5. (N) ELEVATOR CONTROL BUTTON ID SEE DETAIL 1/A511
6. (N) ELEVATOR DOOR JAMB ID - SEE DETAIL 11/A511
7. (E) ELEVATOR NOTES - SEE DETAIL 16/A511
8. FILL-IN (E) WINDOW- SEE DETAIL 7/A813
9. (N) ACCESSIBLE LOCKERS, SEE DETAIL 19/A441
10. (N) WINDOW SYSTEM INFILL - SEE DETAIL 2/A813
11. AED DEFIBRILLATORS - SEE SPECS
12. (N) WING RAILS, SEE DETAIL 15/A441
13. LCD SCREEN - SEE DETAIL 7/A511
14. ADD ALT: WHITE WASH WOOD PANEL (WALL & CEILING)
15. SURFACE MOUNTED FLOOR MATS 6'-0" LONG x FULL WIDTH OF ENTRY - UNO
51. WASHER & DRYER . (OFCI)
52. (E) ADA LOCKERS - INSTALLED DURING DSA # 01-110821
53. 4" WIDE WHITE BOARD
54. (N) 3/8" LAMINATED GLAZING.
55. (N) SINKS - SEE DETAIL 12/A471 & S.P.D.
56. WORK INCLUDES EXTENDING WALL HEIGHT AS NEEDED PER DETAIL 19/A841 W/ (N) SOUND BATT INSULATION, GYP BOARD EACH SIDE & FINISHES
57. SEE 5/A902 FOR JAMB CONDITION ADJ TO STOREFRONT
58. WHERE SLAB ON GRADE IS CUT, SEE INFILL DETAIL 5/A441
59. DIMENSION TO THE FIRST OUTLET. DO NOT INSTALL OUTLETS IN THIS AREA (KEEP CLEAR OF TABLE LEG), TYP.
71. WALL MOUNTED COMPUTER STATION, TYP - ERGOTRON 45-270-216 w/ CPU BRACKET
72. EXAM TABLE, TYP (OFCI)
73. PATIENT'S CHAIR, TYP (OFCI)
74. DOCTOR'S STOOL, TYP (OFCI)
75. WEIGHT SCALE, TYP. (OFCI)
76. WALL MOUNTED SHARPS CONTAINER, TYP - VERIFY LOCATION WITH COLLEGE BEFORE INSTALLATION
81. MSQ - METRO SHELF (48") - GANKSIGHT BASKET SUPPLY SYSTEM - 7 LEVELS
    - (3) 12" DIVIDERS PER BASKET- GB12D
    - (3) 18" DIVIDERS PER BASKET- GB18D
82. BSC - BENCH TOP SAFETY STORAGE CABINET - BASIS OF DESIGN: GONDOR 45AER0 COORDINATE LOCATION OF UNIT W/ COLLEGE

= DOOR REFERENCE, SEE DOOR SCHEDULE, SHEET **A621**
- INDICATES FLOOR CLEARANCE SEE DETAIL **1/A621**

= INTERIOR PARTITION TYPE, SEE SHEET **A841**

= TV - WALL MOUNTED, SEE DETAIL **18/A941**

= WB = WHITE BOARD - SEE ELEVATION FOR SIZE
TB = TACKBOARD - 36"W x 48" H, MOUNTED 36" AFF, UNO

= ALIGN SURFACE OF WALL, AT BOTH SIDES

= MOP SINK

ALS (ASSISTED LISTENING DEVICE) REQUIRED IN THIS ROOM
(NUMBER = MIN. QUANTITY OF RECEIVERS REQUIRED)
ALS INSTALLED IN MTG ROOMS; OTHERS IN CONTRACT SEE SPECIFICATION

(x) = (D) DEMOLITION
(R) REMOVE AND/OR RELOCATE
(E) EXISTING TO REMAIN - PROTECT
(-) NEW

= DOOR

= WINDOW
SEE WINDOW SCHEDULE SHEET **A621**

(x) FC = FIRE EXTINGUISHER CABINET
(x) = THERMOSTAT
(x) AA = AUTO ASSIST DOOR
(x) FA = FIRE HORN/ STROBE
(x) = DATA
(x) = POWER
(x) SP = SECURITY PANEL

= DRINKING FOUNTAIN

(x) DF

AREA NOT IN SCOPE

(E) LANDSCAPE (NC)

EXISTING

(E) SHEAR WALL TO REMAIN

(E) FRAMED WALL TO REMAIN

(E) CONCRETE WALL TO REMAIN

(E) CASEWORK TO REMAIN - PROTECT

NEW

(N) FRAMED WALL

(N) FIRE-RATED WALL
PROVIDE PLACE CARD PER CBC 703.7
FIRE/SMOKE BARRIER PROTECT ALL OPENINGS

(N) SOUND-RATED WALL

(N) FIRE/SOUND-RATED WALL

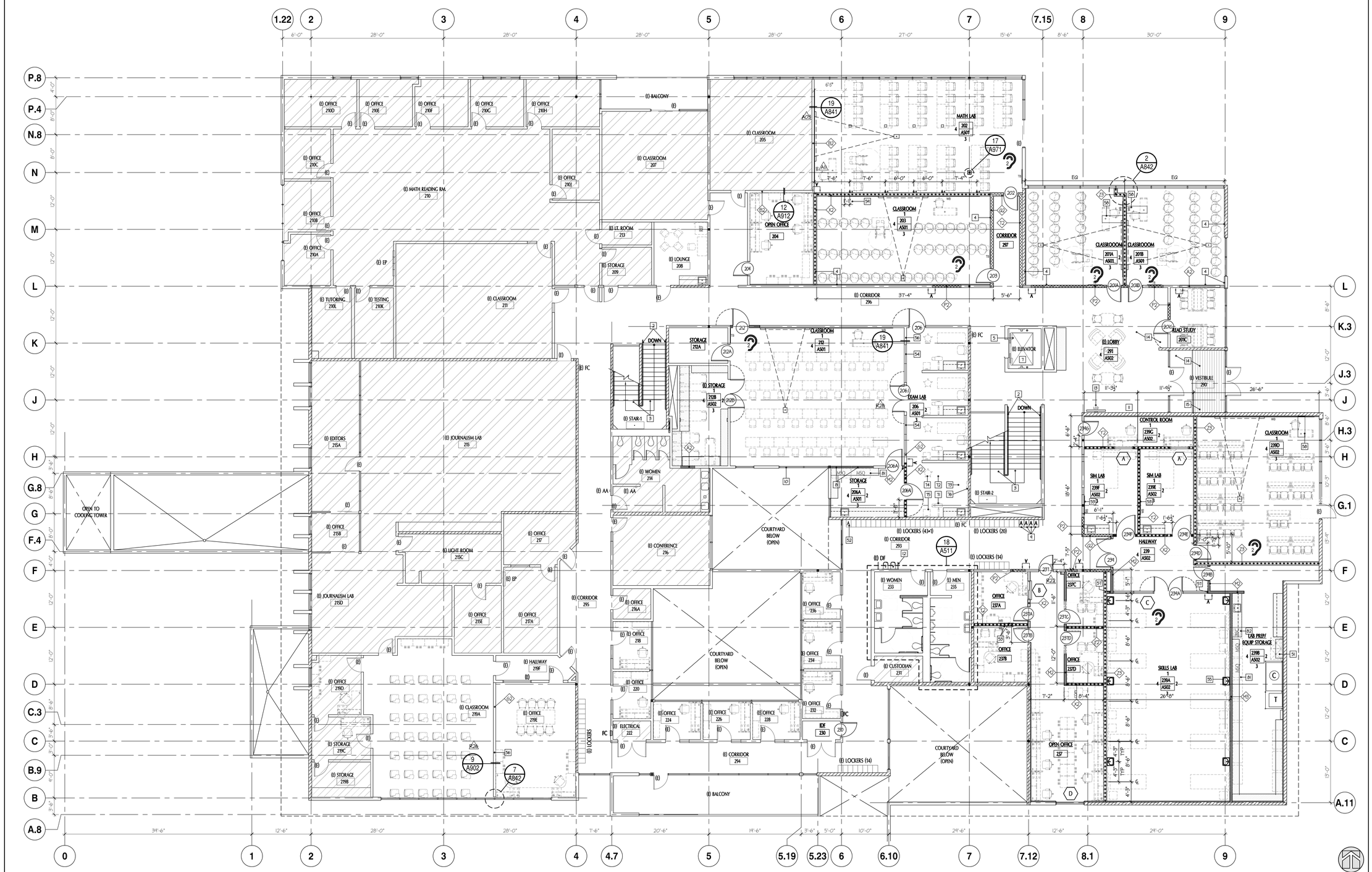

SECOND FLOOR PLAN

SCALE: 1/8" = 1'-0"

1

north

tBP
architecture
planning
interiors

tBP/Architecture
1777 Oakland Boulevard, Suite 320
Walnut Creek, CA 94596
ph: 925.256.8419

architect

consultant

IDENTIFICATION STAMP
DIV. OF THE STATE ARCHITECT
OFFICE OF REGULATION SERVICES
APPL # 01-116617
FILE NO. 7-C1
AC KS SS
DATE

DIVISION OF THE STATE ARCHITECT
1515 CLAY STREET
OAKLAND, CA94612
ph:(510) 622-3101

agency

C-4008 APPLIED ARTS & ADMIN RENOVATION

2600 MISSION BELL DRIVE, SAN PABLO, CA 94806

CONTRA COSTA COMMUNITY COLLEGE DISTRICT
500 COURT STREET MARTINEZ, CA 94553

owner

tBP project number:	20865.00
file name:	A121_2ND FLR.DWG
drawn by:	checked by:
date:	APRIL 20, 2019

rev:	date:	description:
	8/17/2017	BID SET
1, 2, 3, A2.2, P2.2		
A2.2	12/22/17	RFI 26
P2.2	12/28/17	RFI 28
11, A2.2	01/02/18	ASI 11
	04/20/2019	RECORD SET

THIS DRAWING AND THE DESIGNS, DEPICTIONS, IDEAS AND OTHER INFORMATION CONTAINED HEREIN CONSTITUTE UNPUBLISHED WORK OF tBP/ARCHITECTURE AND SHALL REMAIN PROPERTY OF tBP/ARCHITECTURE IN PERPETUITY. NO PART THEREOF SHALL BE REPRODUCED, DISCLOSED, DISTRIBUTED, SOLD, PUBLISHED OR OTHERWISE USED IN ANY WAY WITHOUT THE EXPRESS WRITTEN CONSENT OF tBP/ARCHITECTURE.

drawing title:

SECOND FLOOR PLAN

drawing no.:

A221

drawing of

Record Dwgs

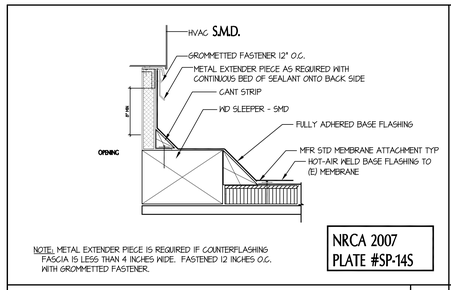

NOTE: METAL EXTENDER PIECE IS REQUIRED IF COUNTERFLASHING FASCIA IS LESS THAN 4 INCHES WIDE. FASTENED 12 INCHES O.C. WITH GROMMETTED FASTENER.

DETAIL - EQUIPMT CURB FLASHING SCALE: NTS 1

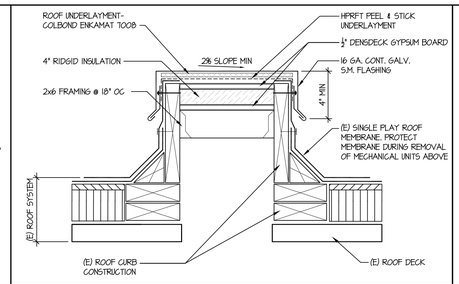

(E) CURB /AIR HANDLING STATION/ EXHAUST FAN SCALE: NTS 2

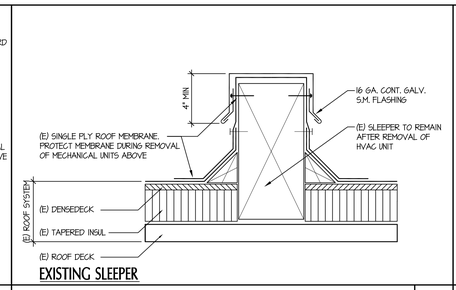

FLASHING OF (E) EQUIP SUPPORT SLEEPER SCALE: NTS 3

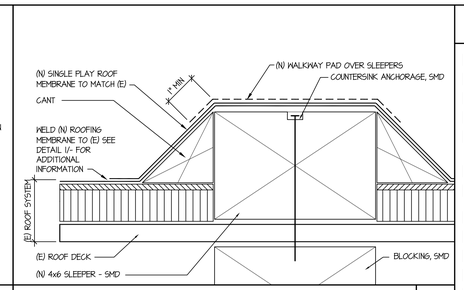

FLASHING OF (N) EQUIP SUPPORT SLEEPER SCALE: NTS 4

KEYNOTES

1. NEW MECHANICAL UNITS, SMD
2. (E) WALKWAY PADS
3. (N) WALKWAY PADS, TYP
4. (E) ROOF HATCH
5. PROVIDE NEW METAL CAP SHEET, SEE DETAIL 2/- ALTERNATIVE OPTION: REMOVE SLEEPER AND REPAIR ROOF TO MATCH (E) ROOF SYSTEM
6. (E) SLEEPERS TO REMAIN
7. REPLACE SLEEPER METAL CAP WITH NEW. SEE DETAIL 3/- (SEE SHEET A131 FOR ADDITIONAL INFORMATION) ALTERNATIVE OPTION: REMOVE SLEEPER AND REPAIR ROOF TO MATCH (E) ROOF SYSTEM
8. (N) 12" MIN SUPPORT SLEEPERS CENTER AT UNIT, SEE DETAIL 4/-
9. (N) SPLIT SYSTEM AC UNIT - SMD AND DETAIL 1/- SIM FOR ROOFING
10. (E) MECHANICAL UNITS TO REMAIN, PROTECT
11. (N) ROOF CRICKET - SINGLE PLY ROOFING o/ ⅝" DENSE DECK o/ TAPERED INSULATION o/ (E) ROOF DECK
12. (E) ROOF DRAIN - PROTECT, TYP.
13. PATCH AND REPAIR (E) ROOF FROM (D) DUCTWORK AND SUPPORTS

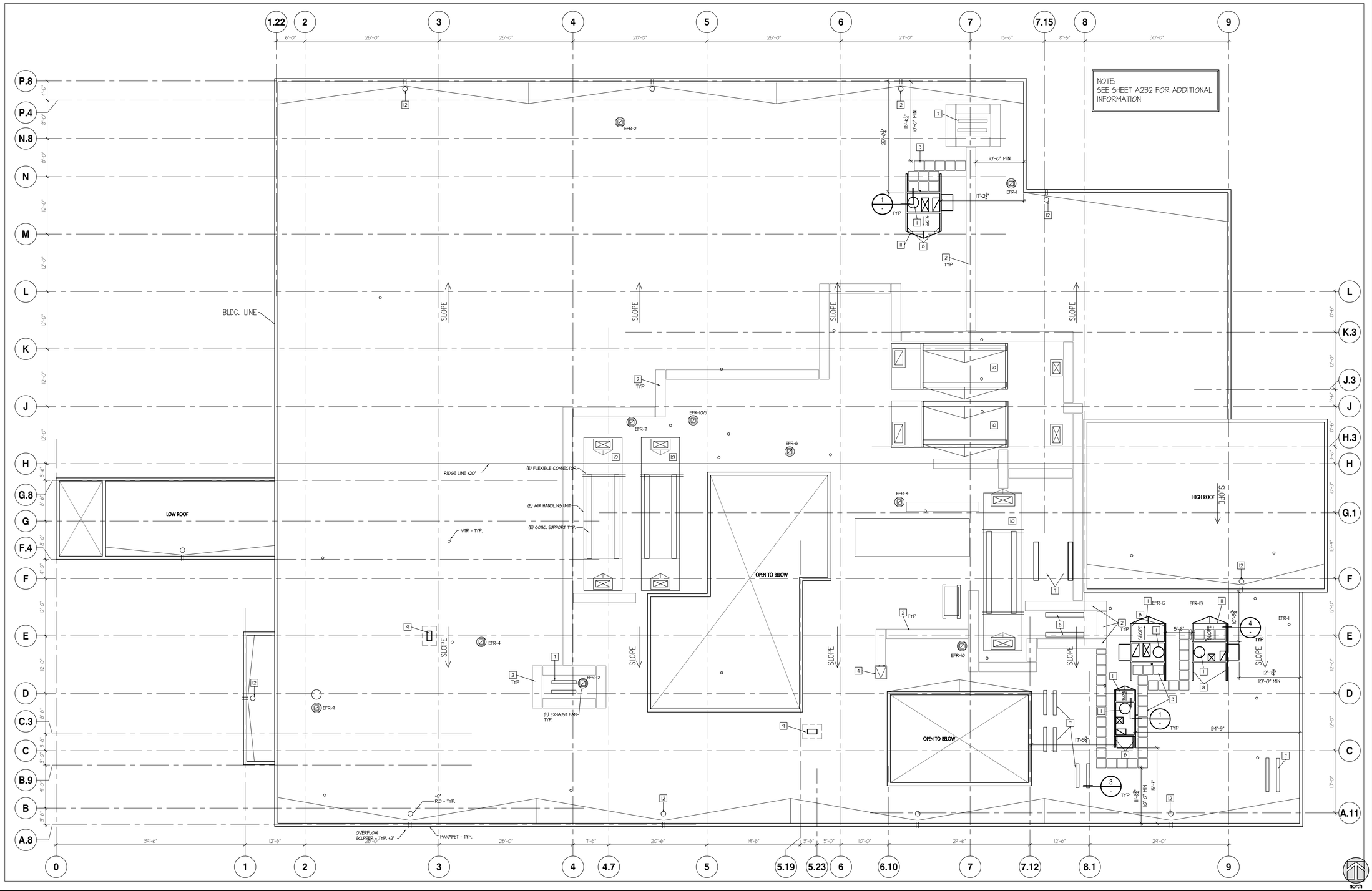

ROOF PLAN SCALE: 1/8"= 1'-0" 1

tBP architecture planning interiors

tBP/Architecture
1777 Oakland Boulevard, Suite 320
Walnut Creek, CA 94596
ph: 925.248.8419

architect

consultant

IDENTIFICATION STAMP
DIV. OF THE STATE ARCHITECT
OFFICE OF REGULATION SERVICES
APPL # 01-110617
FILE NO. 72-C1
AC ___ KS ___ SS ___
DATE ___

DIVISION OF THE STATE ARCHITECT
1515 CLAY STREET
OAKLAND, CA94612
ph:(510) 622-3101

agency

C-4008 APPLIED ARTS & ADMIN RENOVATION

2600 MISSION BELL DRIVE, SAN PABLO, CA 94806

CONTRA COSTA COMMUNITY COLLEGE DISTRICT
500 COURT STREET MARTINEZ, CA 94553

owner

tBP project number:	20865.00
file name:	A231_ ROOF.DWG
drawn by:	checked by:
date:	APRIL 20, 2019

rev:	date:	description:
	8/17/2017	BID SET
	04/20/2019	RECORD SET

THIS DRAWING AND THE WORKS, DESIGNS, DEFINITIONS, IDEAS AND OTHER INFORMATION CONTAINED HEREIN CONSTITUTE UNPUBLISHED WORK OF tBP/ARCHITECTURE AND SHALL REMAIN PROPERTY OF tBP/ARCHITECTURE IN PERPETUITY. NO PART THEREOF SHALL BE REPRODUCED, DISCLOSED, DISTRIBUTED, SOLD, PUBLISHED OR OTHERWISE USED IN ANY WAY WITHOUT THE ADVANCED EXPRESS WRITTEN CONSENT OF tBP/ARCHITECTURE.

drawing title:
ROOF PLAN

drawing no.:
A231

drawing of

Record Dwgs

GENERAL NOTE

1. PRE-MANUFACTURED TJM ARE NOT ALLOWED TO BE CUT
2. CONTRACTOR TO LOCATE NEW ROOF DUCT OPENINGS BETWEEN TJM's
3. CONTRACTOR TO COORDINATE ADDITIONAL CARPENTRY WORK WITH SHEET M5.1

KEYNOTES

1. NEW MECHANICAL UNITS, SMD
   - AC 2-1 1105 LBS
   - AC 2-2 1091 LBS
   - AC 2-3 1105 LBS
   - AC 2-4 1200 LBS

   COORDINATE LOCATION OF DUCT OPENINGS THAT DOES NOT CONFLICT WITH EXISTING TRUSS BELOW

   AC 2-1 & 2-3 OPENINGS -
   RETURN AIR 25"x15"
   SUPPLY AIR 18"x17"

   AC 2-2 & 2-4 OPENINGS
   RETURN AIR 34"x18"
   SUPPLY AIR 34"x18"

8. (N) 12" MINIMUM SUPPORT SLEEPERS. SLEEPERS REQUIRE TO SPAN MIN (4) TJI MEMBERS.
9. (N) SPLIT SYSTEM AC UNIT (1100 LBS) - SMD 4/M5.1
10. (N) DUCT OPENING FOR MECHANICAL UNITS - SEE DETAIL 4/A912

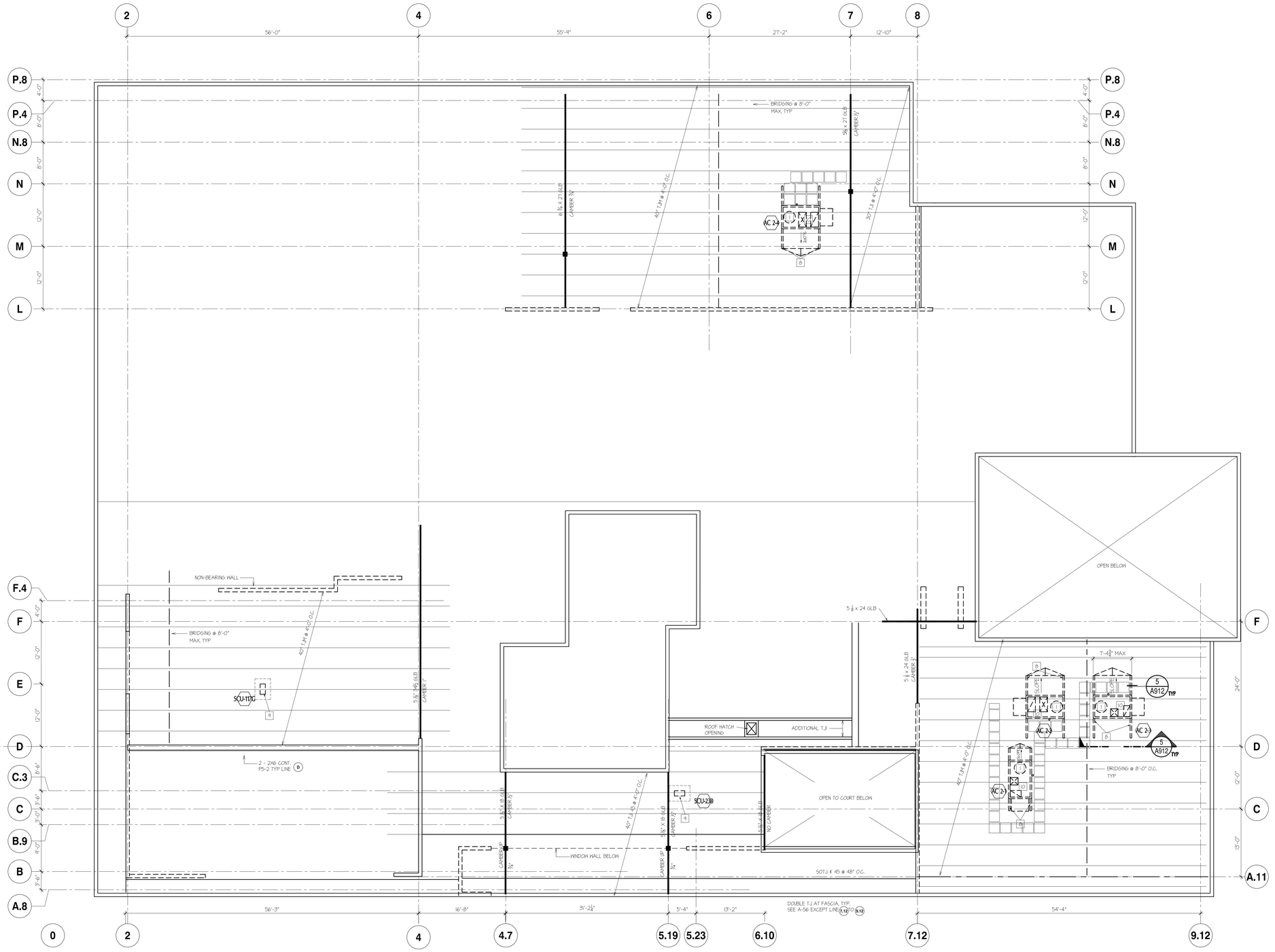

ROOF FRAMING PLAN

SCALE: 1/8"= 1'-0"

1

tBP
architecture
planning
interiors

tBP/Architecture
1777 Oakland Boulevard, Suite 320
Walnut Creek, CA 94596
ph: 925.256.6419

architect

consultant

IDENTIFICATION STAMP
DIV. OF THE STATE ARCHITECT
OFFICE OF REGULATION SERVICES
APPL # 01-110617
FILE NO. 7-C1
AC ____ FCS ____ SS ____
DATE ____

DIVISION OF THE STATE ARCHITECT
1515 CLAY STREET
OAKLAND, CA94612
ph:(510) 622-3101

agency

C-4008 APPLIED ARTS & ADMIN RENOVATION

2600 MISSION BELL DRIVE, SAN PABLO, CA 94806

CONTRA COSTA COMMUNITY COLLEGE DISTRICT
500 COURT STREET MARTINEZ, CA 94553

owner

tBP project number:	20865.00
file name:	A232_ ROOF-STRUCTURAL.DWG
drawn by:	checked by:
date:	APRIL 20, 2019

rev:	date:	description:
	8/17/2017	BID SET
1	04/21/17	ADDENDUM A NI
	04/20/2019	RECORD SET

THIS DRAWING AND THE DESIGNS, DEFINITIONS, IDEAS AND OTHER INFORMATION CONTAINED HEREIN CONSTITUTE UNPUBLISHED WORK OF tBP/ARCHITECTURE AND SHALL REMAIN PROPERTY OF tBP/ARCHITECTURE IN PERPETUITY. NO PART THEREOF SHALL BE REPRODUCED, DISCLOSED, DISTRIBUTED, SOLD, PUBLISHED OR OTHERWISE USED IN ANY WAY WITHOUT THE ADVANCED EXPRESS WRITTEN CONSENT OF tBP/ARCHITECTURE.

drawing title:

ROOF FRAMING PLAN
STRUCTURAL

drawing no.:

A232

drawing of

Record Dwgs

GENERAL NOTES

1. S.E.D. FOR ADDITIONAL INFORMATION ON LIGHTING
2. S.M.D. FOR ADDITIONAL INFO ON DUCTWORK, REGISTERS & GRILLES
3. PROVIDE ACCESS PANELS AT ALL DAMPERS - S.M.D.
4. WHERE GYP BD CEILING OCCURS IN THE COORDIOR/ VESTIBULE, PAINT
5. PROTECT (E) WOOD CEILING PANEL, DO NOT PAINT
6. SEE FINISH FLOOR PLANS FOR WINDOW SHADE INFORMATION
7. WHERE R-19 BATT INSULATION UNDER THE ROOF DECK IS REMOVED FOR CONSTRUCTION, REPLACE IN KIND
8. IF ANY OF THE EXISTING CEILING GRID SYSTEM IS CUT OR ALTERED, THE ENTIRE CEILING SHALL BE UPGRADED TO MEET THE CURRENT REQUIREMENT OF THE 2016 CBC, DSA IR 25-2.16 & DSA IR 25-3.16
9. ADD ALT 3B: AT FIRST FLOOR REPLACE CEILING TILE AT THE CORRIDOR, LOBBY AND VESTIBULE. AT THE SECOND FLOOR REPLACE WITH FIRE GUARD RATED CEILING TILE AND BATT PER DETAIL 10/A812. SEE DETAIL 15/A511 FORDELINIATION OF THESE AREAS.

KEYNOTES - CEILING

1. (E) DOUBLE HIGH CEILING
2. 2HR RATED CEILING, SEE DETAIL 11/A911
3. (E) CEILING TO REMAIN. PROVIDE BALANCE TO MECHANICAL SYSTEM
4. (E) CEILING TO REMAIN (PROTECT IN PLACE) DO NOT REMOVE PARTIAL CEILING TO PROVIDE DEMO &/OR CONSTRUCTION ABOVE. REPLACE/ REPAIR CEILING TILE AFTER COMPLETION OF WORK ABOVE.
5. PATCH & REPAIR GYP BD CEILING
6. (E) CEILING TO REMAIN , WHERE (N) SOUND RATED GYP BD WALL IS ADDED TO THE (E) WALL, DO NOT MODIFY LAY-IN CEILING T-BARS, CAREFULLY REMOVE CEILING TILES AS NEED TO COMPLETE THE WORK, REINSTALL CEILING TILES AFTERWARDS
7. (E) CEILING TO REMAIN (PROTECT IN PLACE)
8. SECONDARY METAL FRAMING STRUCTURE TO PROVIDE SUPPORT OF CEILING GRID, THIS ELIMINATE ANCHORAGE TO THE 2 STORY HIGH ROOF FRAMING - SEE DETAIL 20B/ A412 SIM.
9. ADD ALT: WHITE WASH WOOD PANEL (WALL & CEILING)
51. CEILING MOUNTED EXHAUST FAN W/ WALL LOUVER - S.M.D.
52. REFER TO CLASSROOM 203 TO MIMIC TELECOM COMPONENTS

LIGHTING

S.E.D. FOR FIXTURE SCHEDULE, EMERGENCY LIGHTING & EXIT SIGNS

- = LIGHT FIXTURE - RECESSED
- = LIGHT FIXTURE SUSPENDED
- = LIGHT FIXTURE, SURFACE MOUNTED
- = LIGHT FIXTURE, WALL MOUNTED
- = CEILING MTD EXIT SIGN
- = WALL MTD. EXIT SIGN
- = NEW PROJECTOR SCREEN MOUNT PER DETAIL 14/A912
- = NEW PROJECTOR MOUNT PER DETAIL 9/A912
- = 'S' - SPEAKERS - STD 'MIC' - MICROPHONE - STD 'PRJ' - PROJECTOR - STD

MATERIALS

- = 2X4 LAY-IN ACOUSTIC TILE CEILING, SEE SHEET A911
- = GYP BD CEILING/SOFFITS , PTD. SEE SHEET A911 FOR DETAILS
- = MECHANICAL REGISTERS - SUPPLY - RETURN
- = FIN. CLG HEIGHT ABOVE FINISHED FLOOR SC = SUSPENDED GYP BD CEILING
- = CEILING ACCESS DOOR

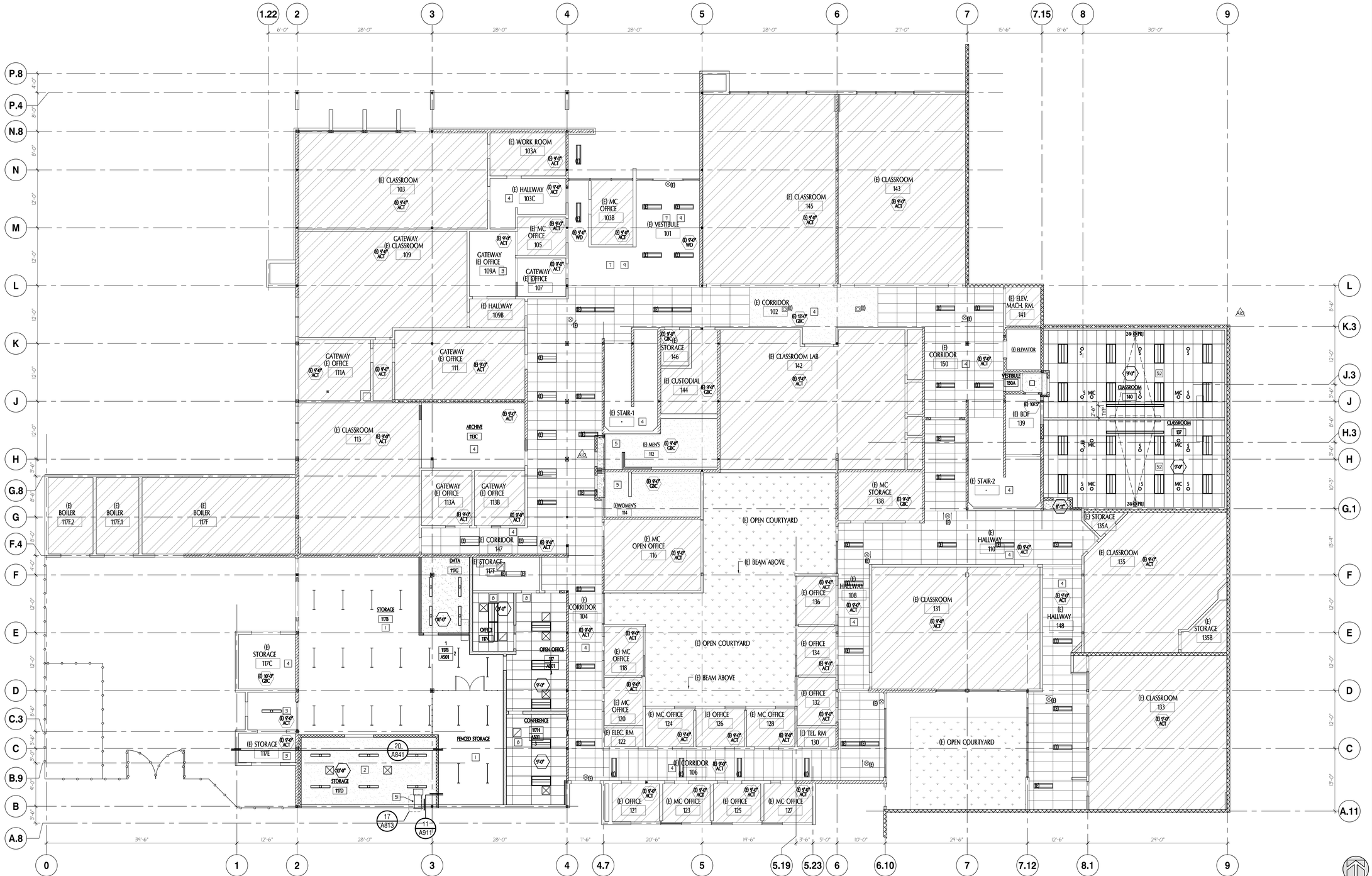

FIRST FLOOR RCP PLAN

SCALE: 1/8"= 1'-0"

1

tBP
architecture
planning
interiors

tBP/Architecture
1777 Oakland Boulevard, Suite 320
Walnut Creek, CA 94596
ph: 925.246.8419

architect

consultant

IDENTIFICATION STAMP
DIV. OF THE STATE ARCHITECT
OFFICE OF REGULATION SERVICES
APPL # 01-116617
FILE NO. 7-C1
AC ___ FCS ___ SS ___
DATE

DIVISION OF THE STATE ARCHITECT
1515 CLAY STREET
OAKLAND, CA94612
ph:(510) 622-3101

agency

C-4008 APPLIED ARTS & ADMIN RENOVATION

2600 MISSION BELL DRIVE, SAN PABLO, CA 94806

CONTRA COSTA COMMUNITY COLLEGE DISTRICT
500 COURT STREET MARTINEZ, CA 94553

owner

tBP project number:	20865.00
file name:	A141_1ST RCP.DWG
drawn by:	checked by:
date:	APRIL 20, 2019

rev:	date:	description:
	8/17/2017	BID SET
1	04/21/17	ADDENDUM A N1
10	03/16/18	A511 10
	04/20/2019	RECORD SET

THIS DRAWING AND THE DESIGNS, DEFINITIONS, IDEAS AND OTHER INFORMATION CONTAINED HEREIN CONSTITUTE UNPUBLISHED WORK OF tBP/ARCHITECTURE AND SHALL REMAIN PROPERTY OF tBP/ARCHITECTURE IN PERPETUITY. NO PART THEREOF SHALL BE REPRODUCED, INCLUDED, DISTRIBUTED, SOLD, PUBLISHED OR OTHERWISE USED IN ANY WAY WITHOUT THE ADVANCED EXPRESS WRITTEN CONSENT OF tBP/ARCHITECTURE.

drawing title:
FIRST FLOOR RCP

drawing no.:
A241

drawing of

Record Dwgs

GENERAL NOTES

1. **S.E.D.** FOR ADDITIONAL INFORMATION ON LIGHTING
2. **S.M.D.** FOR ADDITIONAL INFO ON DUCTWORK, REGISTERS & GRILLES
3. PROVIDE ACCESS PANELS AT ALL DAMPERS - **S.M.D.**
4. WHERE GYP BD CEILING OCCURS IN THE COORDIOR/ VESTIBULE, PAINT
5. PROTECT (E) WOOD CEILING PANEL, DO NOT PAINT
6. SEE FINISH FLOOR PLANS FOR WINDOW SHADE INFORMATION
7. WHERE R-19 BATT INSULATION UNDER THE ROOF DECK IS REMOVED FOR CONSTRUCTION, REPLACE IN KIND
8. IF ANY OF THE EXISTING CEILING GRID SYSTEM IS CUT OR ALTERED, THE ENTIRE CEILING SHALL BE UPGRADED TO MEET THE CURRENT REQUIREMENT OF THE 2016 CBC, DSA IR 25-2.16 & DSA IR 25-3.16
9. ADD ALT 3B: AT FIRST FLOOR REPLACE CEILING TILE AT THE CORRIDOR, LOBBY AND VESTIBULE. AT THE SECOND FLOOR REPLACE WITH FIRE GUARD RATED CEILING TILE AND BATT PER DETAIL 10/A912. SEE DETAIL 15/A511 FORDELINIATION OF THESE AREAS.

KEYNOTES · CEILING

1. (E) DOUBLE HIGH CEILING
2. 2HR RATED CEILING, SEE DETAIL **11/A911**
3. (E) CEILING TO REMAIN. PROVIDE BALANCE TO MECHANICAL SYSTEM
4. (E) CEILING TO REMAIN (PROTECT IN PLACE) DO NOT REMOVE PARTIAL CEILING TO PROVIDE DEMO &/OR CONSTRUCTION ABOVE. REPLACE/ REPAIR CEILING TILE AFTER COMPLETION OF WORK ABOVE.
5. PATCH & REPAIR GYP BD CEILING
6. (E) CEILING TO REMAIN , WHERE (N) SOUND RATED GYP BD WALL IS ADDED TO THE (E) WALL, DO NOT MODIFY LAY-IN CEILING T-BARS, CAREFULLY REMOVE CEILING TILES AS NEED TO COMPLETE THE WORK, REINSTALL CEILING TILES AFTERWARDS
7. (E) CEILING TO REMAIN (PROTECT IN PLACE)
8. SECONDARY METAL FRAMING STRUCTURE TO PROVIDE SUPPORT OF CEILING GRID, THIS ELIMINATE ANCHORAGE TO THE 2 STORY HIGH ROOF FRAMING - SEE DETAIL 20B/ A412 SIM.
9. ADD ALT: WHITE WASH WOOD PANEL (WALL & CEILING)
51. CURTAIN TRACK, TYP. SEE DETAIL 17/A912
52. (E) SOFFIT FRAMING TO REMAIN AS NEEDED, NEW GYP BD SOFFIT 1" BELOW (E) CEILING - SEE DETAIL 2/A912
53. MATCH EXISTING CORRIDOR HEIGHT, CEILING DIVIDER TO BE 6" BELOW CEILING
54. CURTAIN TRACK W/ ACOUSTICAL DRAPERY
55. (N) RECESSED POWERED WINDOW SHADE OVER (E) CURTAIN WALL
56. HEADER OVER STOREFRONT SYSTEM - SEE 5/A902
57. DOUBLE HEIGHT SPACE - DASH LINE DENOTES (N) 1-HR RATED SUSPENDED GYP BD CEILING (1-HR RATED ROOF CEILING ASSEMBLY) - SEE DETAIL 2/ A921

LIGHTING

S.E.D. FOR FIXTURE SCHEDULE, EMERGENCY LIGHTING & EXIT SIGNS

- = LIGHT FIXTURE - RECESSED
- = LIGHT FIXTURE SUSPENDED
- = LIGHT FIXTURE, SURFACE MOUNTED
- = LIGHT FIXTURE, WALL MOUNTED
- = CEILING MTD EXIT SIGN
- = WALL MTD. EXIT SIGN
- = NEW PROJECTOR SCREEN MOUNT PER DETAIL **14/A912**
- = NEW PROJECTOR MOUNT PER DETAIL **9/A912**
- = 'S' - SPEAKERS - STD 'MIC' - MICROPHONE - STD 'PRJ' - PROJECTOR - STD

MATERIALS

- = 2X4 LAY-IN ACOUSTIC TILE CEILING, SEE SHEET **A911**
- = GYP BD CEILING/SOFFITS , PTD. SEE SHEET **A911** FOR DETAILS
- = MECHANICAL REGISTERS - SUPPLY - RETURN
- = FIN. CLG HEIGHT ABOVE FINISHED FLOOR SC = SUSPENDED GYP BD CEILING
- = CEILING ACCESS DOOR

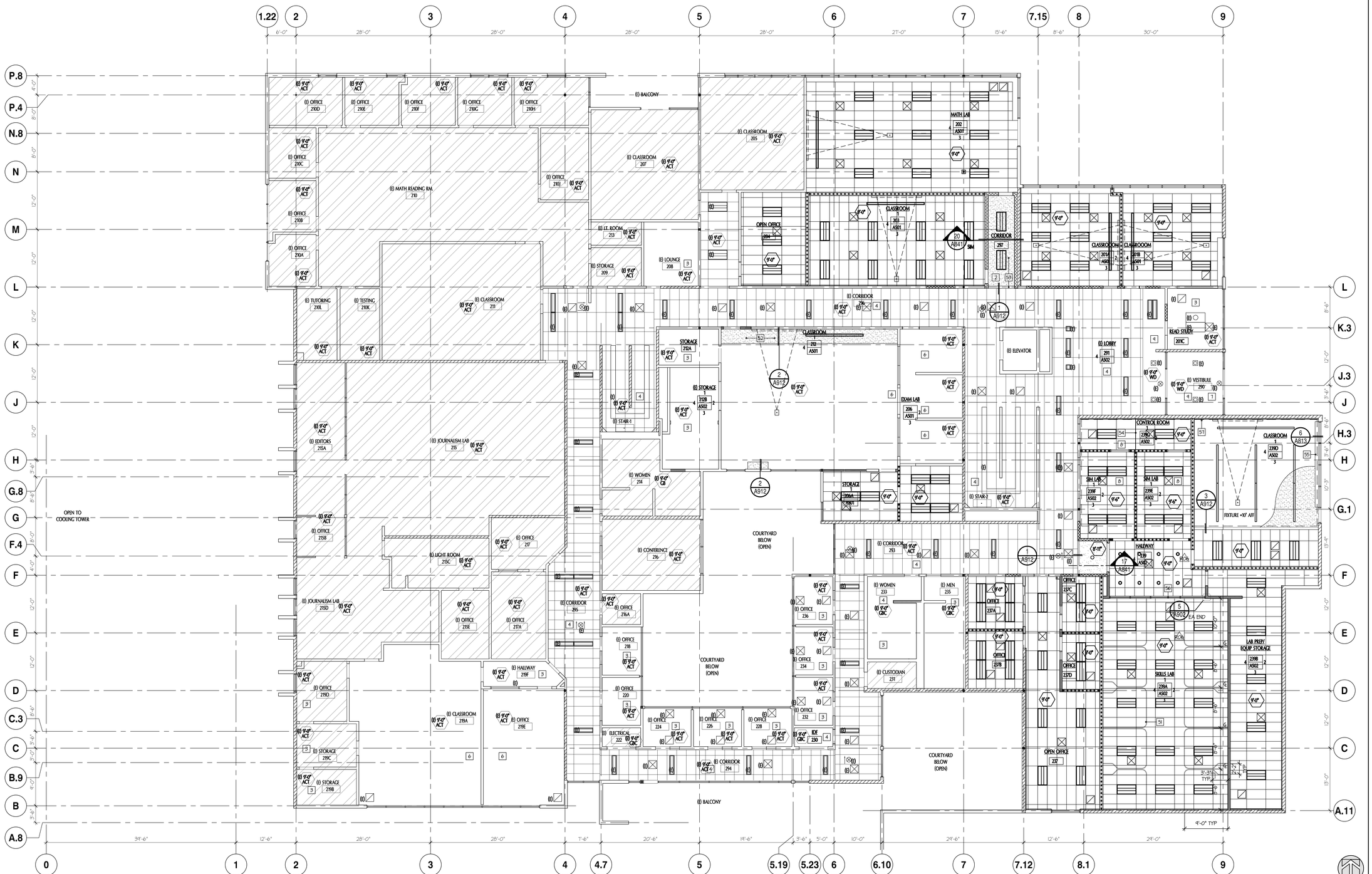

SECOND FLOOR RCP

SCALE: 1/8"= 1'-0"

1

tBP
architecture
planning
interiors

tBP/Architecture
1777 Oakland Boulevard, Suite 320
Walnut Creek, CA 94596
ph: 925.256.8419

architect

consultant

IDENTIFICATION STAMP
DIV. OF THE STATE ARCHITECT
OFFICE OF REGULATION SERVICES
APPL # 01-116617
FILE NO. 7-C1
AC KS SS
DATE

DIVISION OF THE STATE ARCHITECT
1515 CLAY STREET
OAKLAND, CA94612
ph:(510) 622-3101

agency

C-4008 APPLIED ARTS & ADMIN RENOVATION

2600 MISSION BELL DRIVE, SAN PABLO, CA 94806

CONTRA COSTA COMMUNITY COLLEGE DISTRICT
500 COURT STREET MARTINEZ, CA 94553

owner

tBP project number:	20865.00
file name:	A151_2ND RCP.DWG
drawn by:	checked by:
date:	APRIL 20, 2019

rev:	date:	description:
	8/17/2017	BID SET
1	04/21/17	ADDENDUM A NI
RFI 006	11/16/17	RFI 006
	04/20/2019	RECORD SET

THIS DRAWING AND THE DESIGNS, DEFINITIONS, IDEAS AND OTHER INFORMATION CONTAINED HEREIN CONSTITUTE UNPUBLISHED WORK OF tBP/ARCHITECTURE AND SHALL REMAIN PROPERTY OF tBP/ARCHITECTURE IN PERPETUITY. NO PART THEREOF SHALL BE REPRODUCED, INCLUDED, DISTRIBUTED, SOLD, PUBLISHED OR OTHERWISE USED IN ANY WAY WITHOUT THE ADVANCED EXPRESS WRITTEN CONSENT OF tBP/ARCHITECTURE.

drawing title:

SECOND FLOOR RCP

drawing no.:

A251

drawing of

Record Dwgs

GENERAL NOTES

1. FOR ACOUSTICAL PANEL MOUNTING, SEE DETAIL 16/A9.21
2. PROVIDE BACKING FOR SIGNAGE PANEL MOUNTING, SEE SHEET A8.42 FOR BACKING
3. SEE DOOR SCHEDULE FOR SHADES AT SIDE LIGHTS

KEYNOTES - PLAN

1. (N) HORIZONTAL MINI BLINDS - INSTALL INSIDE OF WINDOW SYSTEM FRAMING (A/01)
2. (N) VERTICAL BLINDS
3. (N) ROLLER SHADES - PROVIDE BACKING AS REQUIRED, SEE DETAIL 15/A8.13
3A. (N) RECESSED DOUBLE ROLLER SHADES - SEE DETAIL 1/A8.13
3B. (N) RECESSED ROLLER SHADES - SEE DETAIL 3/A8.13
3C. (N) ROLLER SHADES OVER WINDOW - SEE DETAIL 4/A8.13
3D. (N) RECESSED DOUBLE ROLLER SHADES - SEE DETAIL 6/A8.13
4. REPAIR/ REPLACE (E) DAMAGED VERTICAL BLIND SLATS
5. INSTALL BLACK OUT FILM AT DOORS - 6ILA SMOKE GLARE CONTROL WINDOW FILM (A/01)
6. ACCENT FLOOR BORDER
7. (E) ELEVATOR DOOR (OUTSIDE FACING) TO BE PAINTED P-8
8. ALIGN EDGE WITH TRACK ABOVE
9. (E) HORIZONTAL BLINDS TO REMAIN - PROTECT
21. REMOVE RED/ ORANGE BUILDING SIGNAGE - PATCH AND REPAIR CONCRETE AND/OR STUCCO
22. MODIFY (E) BLDG SIGNAGE TO READ:

    APPLIED ARTS AA — FROM — APPLIED ARTS/ ~~ADMINISTRATION AA~~ (MOVE)

    REMOVE THE SLASH (/), REMOVE "DMINISTRATION AA" AND REINSTALL THE 'A' NEXT TO 'A' TO READ 'AA'
    PATCH AND REPAIR STUCCO - PAINT TO MATCH EXISTING
23. PROVIDE OVERHEAD FIRE EXTINGUISHER SIGNAGE PER SPEC SECTION 10 44 00
24. PROVIDE OVERHEAD AED SIGNAGE PER SPEC SECTION 10 99 00

LEGEND

- (X-1) FINISHES - SEE FINISH SCHEDULE - SHEET A6.11
- (X) SIGNAGE - SEE SHEET A9.01 FOR SIGNAGE TYPE
- CG 4" HIGH CORNER GUARD INSTALLED FROM TOP OF RUBBER BASE - SEE DETAIL 10/A9.41
- PAINTED SURFACES - ACCENT
- ACOUSTICAL PANEL
- WALL COVERINGS
- ACCENT COLOR
- A — ALIGN

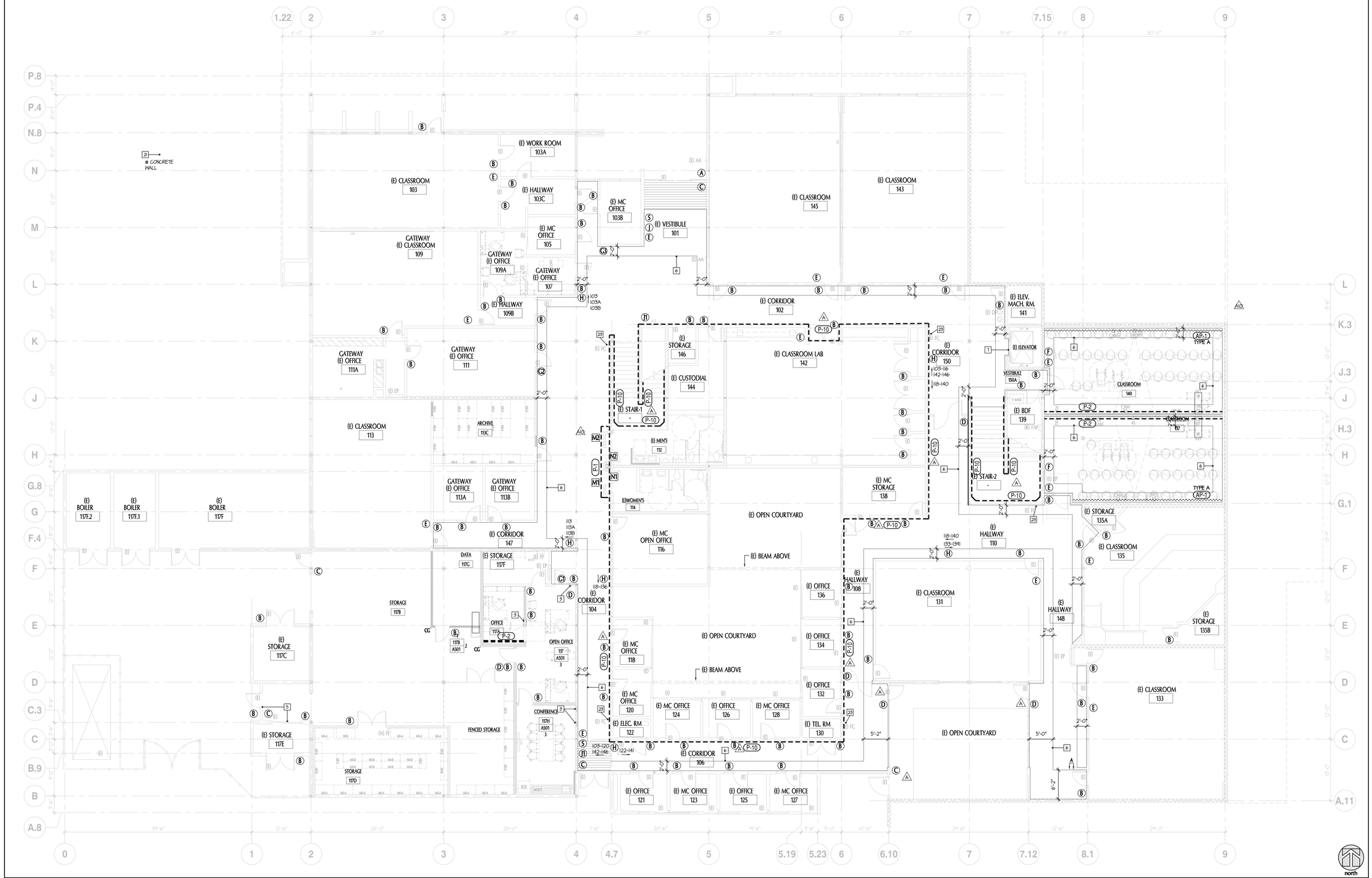

FIRST FLOOR PLAN - FINISH & SIGNATURE (A/01) SCALE: 1/8"= 1'-0" 1

tBP
architecture
planning
interiors

tBP/Architecture
1777 Oakland Boulevard, Suite 320
Walnut Creek, CA 94596
ph: 925.248.8419

architect

consultant

IDENTIFICATION STAMP
DIV. OF THE STATE ARCHITECT
OFFICE OF REGULATION SERVICES
APPL # 01-116617
FILE NO. 7-C1
AC ___ KS ___ SS ___
DATE

DIVISION OF THE STATE ARCHITECT
1515 CLAY STREET
OAKLAND, CA94612
ph:(510) 622-3101

agency

C-4008 APPLIED ARTS & ADMIN RENOVATION

2600 MISSION BELL DRIVE, SAN PABLO, CA 94806

CONTRA COSTA COMMUNITY COLLEGE DISTRICT
500 COURT STREET MARTINEZ, CA 94553

owner

tBP project number:	20865.00
file name:	A261_1ST FLR FINISH PLAN.DWG
drawn by:	checked by:
date:	APRIL 20, 2019

rev:	date:	description:
	8/17/2017	BID SET
1	04/21/17	ADDENDUM A
2	01/31/17	ASI 06
3	01/26/18	ASI 07
4	03/16/18	ASI 10
	04/20/2019	RECORD SET

THIS DRAWING AND THE DESIGNS, DEFINITIONS, IDEAS AND OTHER INFORMATION CONTAINED HEREIN CONSTITUTE UNPUBLISHED WORK OF tBP/ARCHITECTURE AND SHALL REMAIN PROPERTY OF tBP/ARCHITECTURE IN PERPETUITY. NO PART THEREOF SHALL BE REPRODUCED, DISCLOSED, DISTRIBUTED, SOLD, PUBLISHED OR OTHERWISE USED IN ANY WAY WITHOUT THE ADVANCED EXPRESS WRITTEN CONSENT OF tBP/ARCHITECTURE.

drawing title:

FIRST FLOOR PLAN
FINISH & SIGNAGE

drawing no.:

A261

drawing of

Record Dwgs

GENERAL NOTES

1. FOR ACOUSTICAL PANEL MOUNTING, SEE DETAIL 16/A9.21
2. PROVIDE BACKING FOR SIGNAGE PANEL MOUNTING, SEE SHEET A8.42 FOR BACKING
3. SEE DOOR SCHEDULE FOR SHADES AT SIDE LIGHTS

KEYNOTES - PLAN

1. (N) HORIZONTAL MINI BLINDS - INSTALL INSIDE OF WINDOW SYSTEM FRAMING (A2.1)
2. (N) VERTICAL BLINDS
3. (N) ROLLER SHADES - PROVIDE BACKING AS REQUIRED, SEE DETAIL 15/A8.13
3A. (N) RECESSED DOUBLE ROLLER SHADES - SEE DETAIL 1/A8.13
3B. (N) RECESSED ROLLER SHADES - SEE DETAIL 3/A8.13
3C. (N) ROLLER SHADES OVER WINDOW - SEE DETAIL 4/A8.13
3D. (N) RECESSED DOUBLE ROLLER SHADES - SEE DETAIL 6/A8.13
4. REPAIR/ REPLACE (E) DAMAGED VERTICAL BLIND SLATS
5. INSTALL BLACK OUT FILM AT DOORS - GILA SMOKE GLARE CONTROL WINDOW FILM (A)
6. ACCENT FLOOR BORDER
7. (E) ELEVATOR DOOR (OUTSIDE FACING) TO BE PAINTED P-8
8. ALIGN EDGE WITH TRACK ABOVE
9. (E) HORIZONTAL BLINDS TO REMAIN - PROTECT
21. REMOVE RED/ ORANGE BUILDING SIGNAGE - PATCH AND REPAIR CONCRETE AND/OR STUCCO
22. MODIFY (E) BLDG SIGNAGE TO READ:

    APPLIED ARTS FROM APPLIED ARTS/ AA ~~ADMINISTRATION AA~~ (MOVE)

    REMOVE THE SLASH (/). REMOVE "DMINISTRATION AA" AND REINSTALL THE 'A' NEXT TO 'A' TO READ 'AA' PATCH AND REPAIR STUCCO - PAINT TO MATCH EXISTING
23. PROVIDE OVERHEAD FIRE EXTINGUISHER SIGNAGE PER SPEC SECTION 10 44 00
24. PROVIDE OVERHEAD AED SIGNAGE PER SPEC SECTION 10 99 00

LEGEND

- (X-1) FINISHES - SEE FINISH SCHEDULE - SHEET A6.11
- (X) SIGNAGE - SEE SHEET A9.81 FOR SIGNAGE TYPE
- CG 4' HIGH CORNER GUARD INSTALLED FROM TOP OF RUBBER BASE - SEE DETAIL 10/A9.41
- PAINTED SURFACES - ACCENT
- ACOUSTICAL PANEL
- WALL COVERINGS
- ACCENT COLOR
- A ALIGN

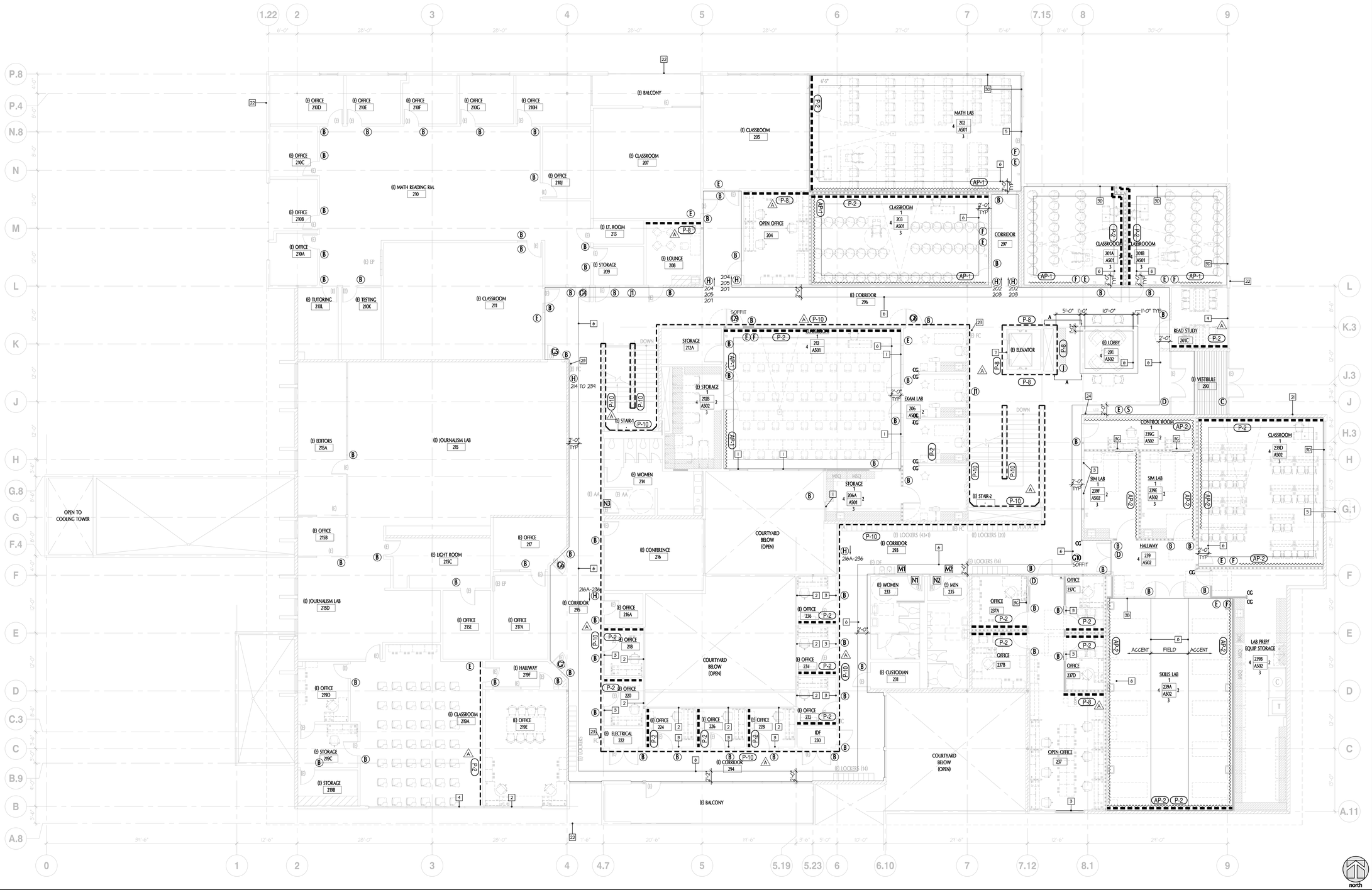

SECOND FLOOR PLAN - FINISH & SIGNAGE (A2.1)

SCALE: 1/8" = 1'-0"

1

tBP architecture planning interiors

tBP/Architecture
1777 Oakland Boulevard, Suite 320
Walnut Creek, CA 94596
ph: 925.248.8419

architect

consultant

IDENTIFICATION STAMP
DIV. OF THE STATE ARCHITECT
OFFICE OF REGULATION SERVICES
APPL # 01-110617
FILE NO. 7-C1
AC ___ FCS ___ SS ___
DATE

DIVISION OF THE STATE ARCHITECT
1515 CLAY STREET
OAKLAND, CA 94612
ph:(510) 622-3101

agency

C-4008 APPLIED ARTS & ADMIN RENOVATION

2600 MISSION BELL DRIVE, SAN PABLO, CA 94806

CONTRA COSTA COMMUNITY COLLEGE DISTRICT
500 COURT STREET MARTINEZ, CA 94553

owner

tBP project number:	20865.00
file name:	A271_2ND FLR FINISH.DWG
drawn by:	checked by:
date:	APRIL 20, 2019

rev:	date:	description:
	8/17/2017	BID SET
1	04/21/17	ADDENDUM A
ASI 01	01/26/18	ASI 01
	04/20/2019	RECORD SET

THIS DRAWING AND THE DESIGNS, DEPICTIONS, IDEAS AND OTHER INFORMATION CONTAINED HEREIN CONSTITUTE UNPUBLISHED WORK OF tBP/ARCHITECTURE AND SHALL REMAIN PROPERTY OF tBP/ARCHITECTURE IN PERPETUITY. NO PART THEREOF SHALL BE REPRODUCED, DISCLOSED, DISTRIBUTED, SOLD, PUBLISHED OR OTHERWISE USED IN ANY WAY WITHOUT THE ADVANCED EXPRESS WRITTEN CONSENT OF tBP/ARCHITECTURE.

drawing title:

SECOND FLOOR PLAN
FINISH & SIGNAGE

drawing no.:

A271

drawing of

Record Dwgs

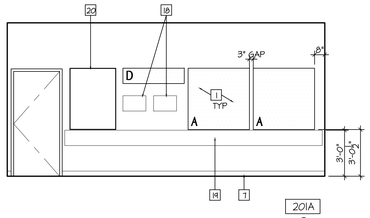

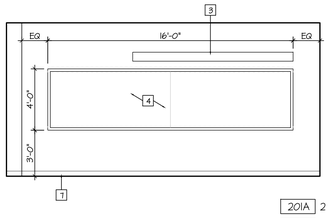

CLASSROOM 201A & 201B
SCALE:1/4" = 1'-0"

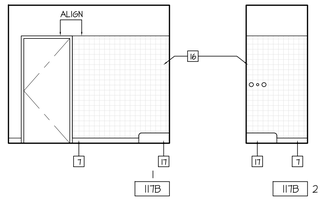

STORAGE 117B
SCALE:1/4" = 1'-0"

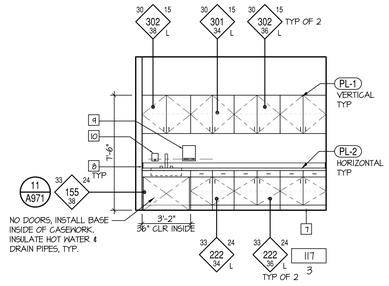

OPEN OFFICE 117
SCALE:1/4" = 1'-0"

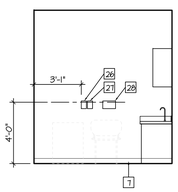

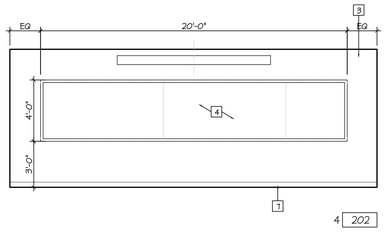

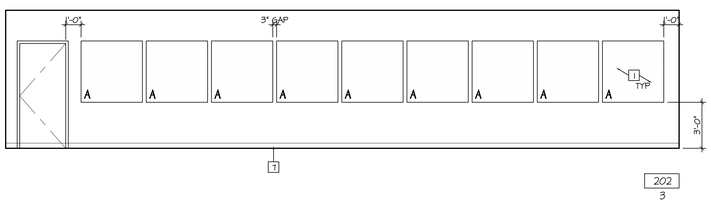

MATH LAB 202
SCALE:1/4" = 1'-0"

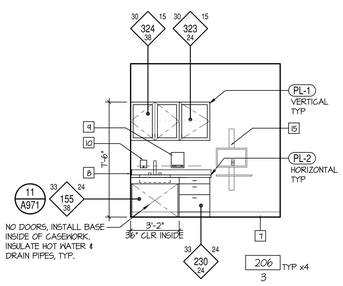

EXAM LAB 206
SCALE:1/4" = 1'-0"

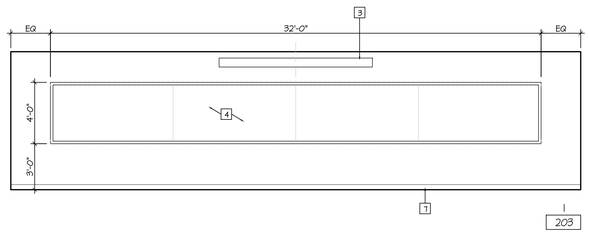

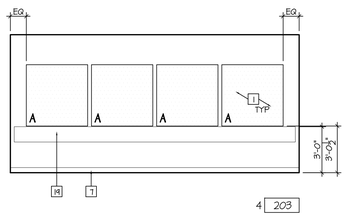

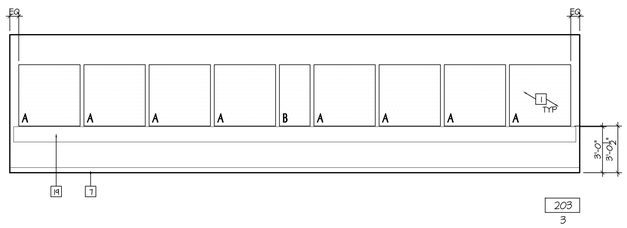

CLASSROOM 203
SCALE:1/4" = 1'-0"

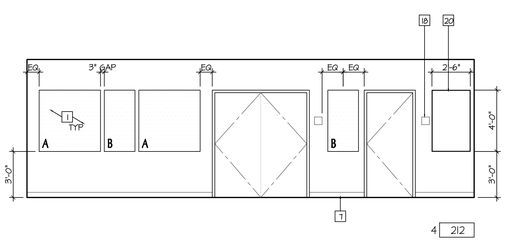

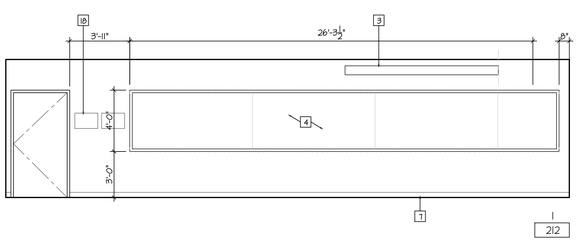

CLASSROOM 212
SCALE:1/4" = 1'-0"

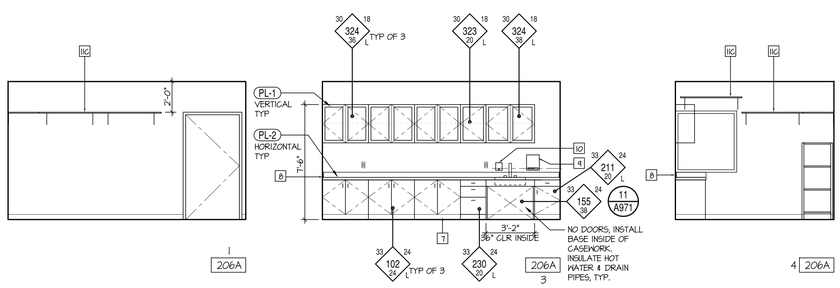

STORAGE 206A
SCALE:1/4" = 1'-0"

GENERAL NOTES

- PL-1 PLASTIC LAMINATE - FORMICA - WILD CHERRY - 5904
- PL-2 PLASTIC LAMINATE - FORMICA - BELUGA BEIGE - 3648
- ACOUSTICAL PANEL, SEE KEYNOTE 1 FOR SIZE, TYP

KEYNOTES

NOTE: NOT ALL KEYNOTES APPLY TO ALL ELEVATIONS

1. ACOUSTICAL WALL PANEL - FABRIC, WRAPPED, SIZED AS INDICATED PROVIDE REQ'D BACKING AS REQUIRED. SEE DETAIL 16/A9.21
   TYPE A - 4'x 4'
   TYPE B - 2'x 4'
   TYPE C - 2'x 2'
   TYPE D - 1' x 4'
2. ACCESSIBLE SINK - SEE DETAIL 12/A9.11
3. PROJECTOR SCREEN - PROVIDE BACKING PER DETAIL 13/A8.42
4. WHITEBOARD - PROVIDE BACKING PER DETAIL 13/A8.42
5. OUTLETS - SEE ELECTRICAL
6. UNDERLAVATORY GUARDS, MOLDED VINYL COVERING FOR SUPPLY AND DRAIN PIPING WITH FLIP TOPS AT VALVE TO ALLOW SERVICE ACCESS WITHOUT REMOVING COVERINGS: TRUEBRO LAV GUARD OR APPROVED EQUAL.
7. WALL BASE, SEE FINISH SCHEDULE
8. BACKSPLASH WITH SPLASH RETURNS
9. KIMBERLY CLARK PROFESSIONAL 09.16500 PAPER TOWEL DISPENSER (COLLEGE STANDARD) - SEE DETAIL 12/A9.11
10. SOAP DISPENSER, BETCO CLARIO FOAMING DISPENSER - (#41821-00) WHITE - SEE DETAIL 12/A9.11
11. UTILITY SHELVES AND BRACKETS: KNAPE & VOGT. DECORATIVE, HEAVY DUTY, DOUBLE-TRACK STANDARDS AND BRACKETS, MODEL NO. 82/182. MELATEX LAMINATE SHELVES. PROVIDE BACKING AS REQUIRED
    A = 14" x LENGTH OF WALL, UNO
    B = 18" x LENGTH OF WALL, UNO
    C = 24" x LENGTH OF WALL, UNO
12. PRIVACY CURTAIN, SURFACE MOUNTED TRACKS
13. 8'-0" FIRE RATED PLY-WOOD - PAINTED TO MATCH ADJACENT WALL
14. LCD SCREEN (NIC)
15. WALL MOUNTED COMPUTER STATION
16. FRP WAINSCOT
17. MOP SINK
18. SIGNAGE - SEE FINISH PLANS
19. WALL GUARD 12" HIGH
20. TACK BOARD - 36" W x 48" H, UNO
21. HEADWALL, TYP - RELOCATED - OFCI (8) - PROVIDE (4) NEW UNITS TO MATCH EXISTING UNITS BY "HOSPITAL SYSTEMS INC." - PROVIDE BACKING PER SHEET A8.42, SEE 11 / A8.42
22. BED LOCATOR
23. SIDE TABLE, TYP (NIC)
24. WALL MOUNTED SHARPS CONTAINER @ EA BED, TYP
25. HAND SANITIZER PUSH BUTTON DISPENSER - PURELL (H-2288)
26. WALL MOUNTED BLOOD PRESSURE (OFCI)
27. WALL MOUNTED OTOSCOPE/ OPHTHALMOSCOPE SET (OFCI)
28. WALL MOUNTED SHARPS CONTAINER

tBP
architecture
planning
interiors

tBP/Architecture
1777 Oakland Boulevard, Suite 320
Walnut Creek, CA 94596
ph: 925.248.8419

architect

consultant

IDENTIFICATION STAMP
DIV. OF THE STATE ARCHITECT
OFFICE OF REGULATION SERVICES
APPL # 01-110617
FILE NO. 7-C1
AC ____ FLS ____ SS ____
DATE ____

DIVISION OF THE STATE ARCHITECT
1515 CLAY STREET
OAKLAND, CA 94612
ph:(510) 622-3101

agency

C-4008 APPLIED ARTS & ADMIN RENOVATION

2600 MISSION BELL DRIVE, SAN PABLO, CA 94806

CONTRA COSTA COMMUNITY COLLEGE DISTRICT
500 COURT STREET MARTINEZ, CA 94553

owner

tBP project number: 20865.00
file name: A501 Interior Elevations.dwg
drawn by: XX checked by:
date: APRIL 20, 2019

rev:	date:	description:
	8/17/2017	BID SET
	04/20/2019	RECORD SET

THIS DRAWING AND THE DESIGN, DEFINITIONS, IDEAS AND OTHER INFORMATION CONTAINED HEREIN CONSTITUTE UNPUBLISHED WORK OF tBP/ARCHITECTURE AND SHALL REMAIN PROPERTY OF tBP/ARCHITECTURE IN PERPETUITY. NO PART THEREOF SHALL BE REPRODUCED, DISCLOSED, DISTRIBUTED, SOLD, PUBLISHED OR OTHERWISE USED IN ANY WAY WITHOUT THE ADVANCED EXPRESS WRITTEN CONSENT OF tBP/ARCHITECTURE.

drawing title:
INTERIOR ELEVATIONS

drawing no.:
A501

drawing of

Record Dwgs

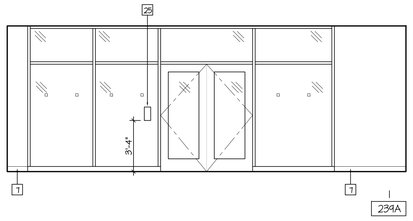

SKILLS LAB SCALE:1/4" = 1'-0" | 239A

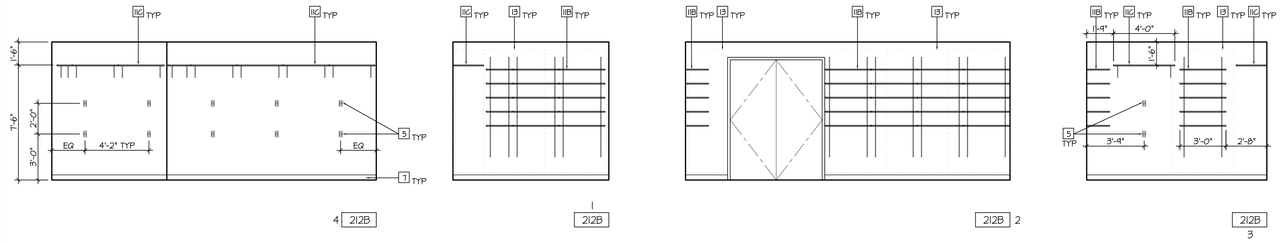

(E) STORAGE SCALE:1/4" = 1'-0" | 212B

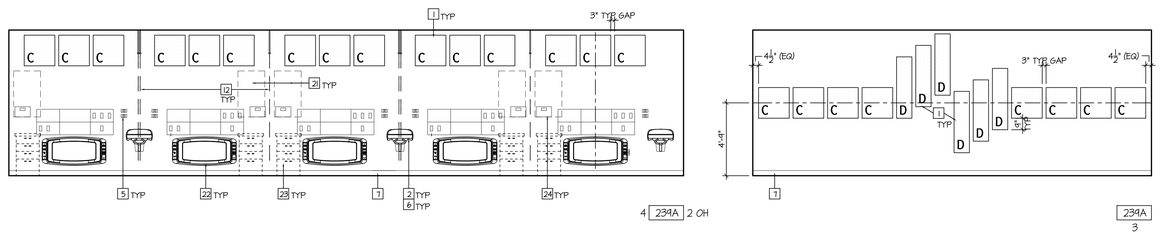

SKILLS LAB SCALE:1/4" = 1'-0" | 239A

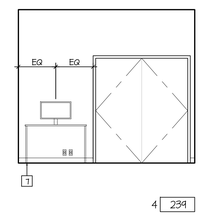

HALLWAY SCALE:1/4" = 1'-0" | 239

GENERAL NOTES

- PL-1 PLASTIC LAMINATE - FORMICA - WILD CHERRY - 5904
- PL-2 PLASTIC LAMINATE - FORMICA - BELUGA BEIGE - 3648
- ACOUSTICAL PANEL, SEE KEYNOTE 1 FOR SIZE, TYP

KEYNOTES

NOTE: NOT ALL KEYNOTES APPLY TO ALL ELEVATIONS

1. ACOUSTICAL WALL PANEL - FABRIC, WRAPPED, SIZED AS INDICATED PROVIDE REQ'D BACKING AS REQUIRED. SEE DETAIL 16/A921
   - TYPE A - 4'x 4'
   - TYPE B - 2'x 4'
   - TYPE C - 2'x 2'
   - TYPE D - 1' x 4'
2. ACCESSIBLE SINK - SEE DETAIL 12/A971I
3. PROJECTOR SCREEN - PROVIDE BACKING PER DETAIL 13/A842
4. WHITEBOARD - PROVIDE BACKING PER DETAIL 13/A842
5. OUTLETS - SEE ELECTRICAL
6. UNDERLAVATORY GUARDS, MOLDED VINYL COVERING FOR SUPPLY AND DRAIN PIPING WITH FLIP TOPS AT VALVE TO ALLOW SERVICE ACCESS WITHOUT REMOVING COVERINGS: TRUEBRO LAV GUARD OR APPROVED EQUAL.
7. WALL BASE, SEE FINISH SCHEDULE
8. BACKSPLASH WITH SPLASH RETURNS
9. KIMBERLY CLARK PROFESSIONAL 09766500 PAPER TOWEL DISPENSER (COLLEGE STANDARD) - SEE DETAIL 12/A971I
10. SOAP DISPENSER, BETCO CLARIO FOAMING DISPENSER - (#41821-00) WHITE - SEE DETAIL 12/A971I
11. UTILITY SHELVES AND BRACKETS: KNAPE & VOGT. DECORATIVE, HEAVY DUTY, DOUBLE-TRACK STANDARDS AND BRACKETS, MODEL NO. 82/182. MELATEX LAMINATE SHELVES. PROVIDE BACKING AS REQUIRED
   - A = 14" x LENGTH OF WALL, UNO
   - B = 18" x LENGTH OF WALL, UNO
   - C = 24" x LENGTH OF WALL, UNO
12. PRIVACY CURTAIN, SURFACE MOUNTED TRACKS
13. 8'-0" FIRE RATED PLY-WOOD - PAINTED TO MATCH ADJACENT WALL
14. LCD SCREEN (NIC)
15. WALL MOUNTED COMPUTER STATION
16. FRP WAINSCOT
17. MOP SINK
18. SIGNAGE - SEE FINISH PLANS
19. WALL GUARD 12" HIGH
20. TACK BOARD - 36" W x 48" H, UNO
21. HEADWALL, TYP - RELOCATED - OFCI (b) - PROVIDE (4) NEW UNITS TO MATCH EXISTING UNITS BY "HOSPITAL SYSTEMS INC." - PROVIDE BACKING PER SHEET A842, SEE II / A842
22. BED LOCATOR
23. SIDE TABLE, TYP (NIC)
24. WALL MOUNTED SHARPS CONTAINER @ EA BED, TYP
25. HAND SANITIZER PUSH BUTTON DISPENSER - PURELL (H-2288)
26. WALL MOUNTED BLOOD PRESSURE (OFCI)
27. WALL MOUNTED OTOSCOPE/ OPHTHALMOSCOPE SET (OFCI)
28. WALL MOUNTED SHARPS CONTAINER

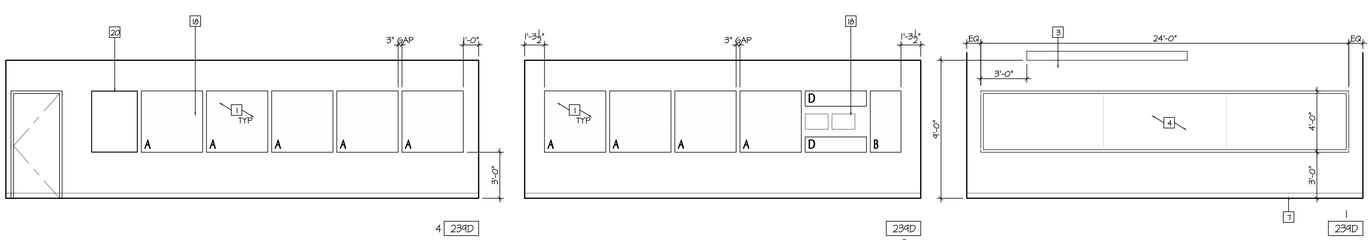

CLASSROOM SCALE:1/4" = 1'-0" | 239D

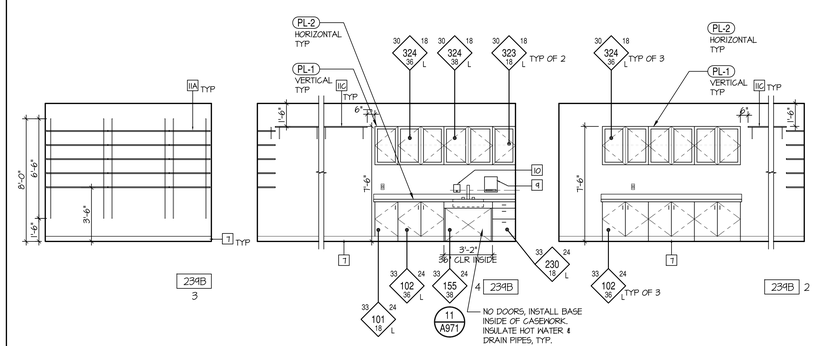

LAB EQUIP STORAGE SCALE:1/4" = 1'-0" | 239B

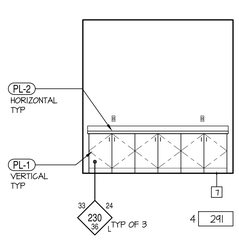

LOBBY SCALE:1/4" = 1'-0" | 291

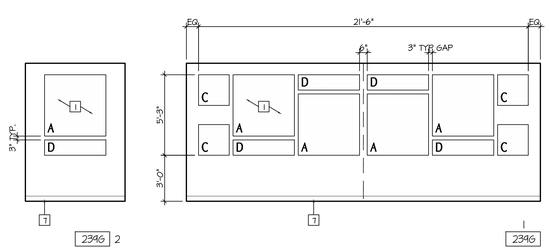

CONTROL ROOM SCALE:1/4" = 1'-0" | 239G

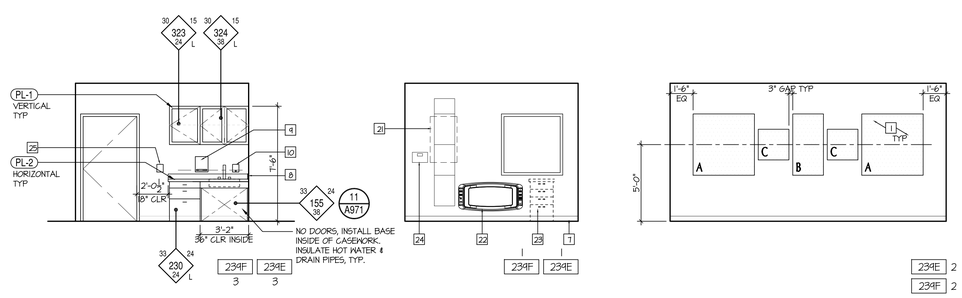

SIM LAB SCALE:1/4" = 1'-0" | 239F & 239E

tBP
architecture
planning
interiors

tBP/Architecture
1777 Oakland Boulevard, Suite 320
Walnut Creek, CA 94596
ph: 925.248.8419

architect

consultant

IDENTIFICATION STAMP
DIV. OF THE STATE ARCHITECT
OFFICE OF REGULATION SERVICES
APPL # 01-110617
FILE NO. 7-C1
AC ____ FCS ____ SS ____
DATE ____

DIVISION OF THE STATE ARCHITECT
1515 CLAY STREET
OAKLAND, CA94612
ph:(510) 622-3101

agency

C-4008 APPLIED ARTS
& ADMIN RENOVATION
2600 MISSION BELL DRIVE, SAN PABLO, CA 94806

CONTRA COSTA COMMUNITY
COLLEGE DISTRICT
500 COURT STREET MARTINEZ, CA 94553

owner

tBP project number: 20865.00
file name: A501 Interior Elevations.dwg
drawn by: dm
checked by:
date: APRIL 20, 2019

rev:	date:	description:
	8/17/2017	BID SET
	04/20/2019	RECORD SET

THIS DRAWING AND THE DESIGNS, DIMENSIONS, IDEAS AND OTHER INFORMATION CONTAINED HEREIN CONSTITUTE UNPUBLISHED WORK OF tBP/ARCHITECTURE AND SHALL REMAIN PROPERTY OF tBP/ARCHITECTURE IN PERPETUITY. NO PART THEREOF SHALL BE REPRODUCED, DISCLOSED, DISTRIBUTED, SOLD, PUBLISHED OR OTHERWISE USED IN ANY WAY WITHOUT THE ADVANCED EXPRESS WRITTEN CONSENT OF tBP/ARCHITECTURE.

drawing title:
INTERIOR ELEVATIONS

drawing no.:
A502

drawing of

Record Dwgs

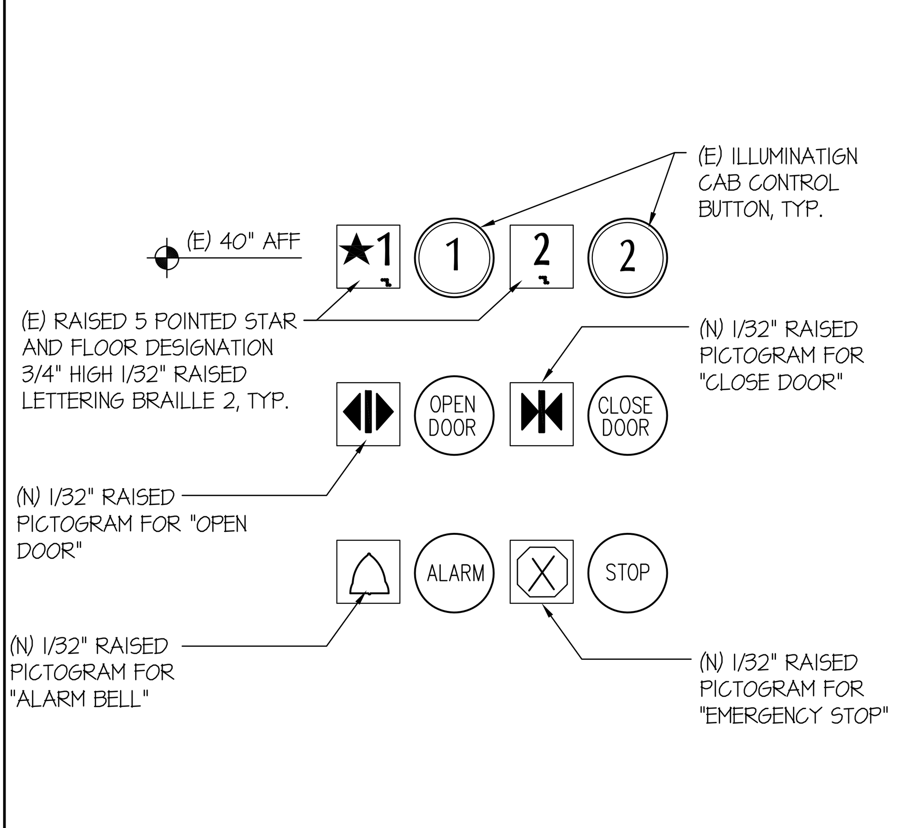

DETAIL - ELEVATOR CONTROLS BUTTON ID SCALE: HALF 1

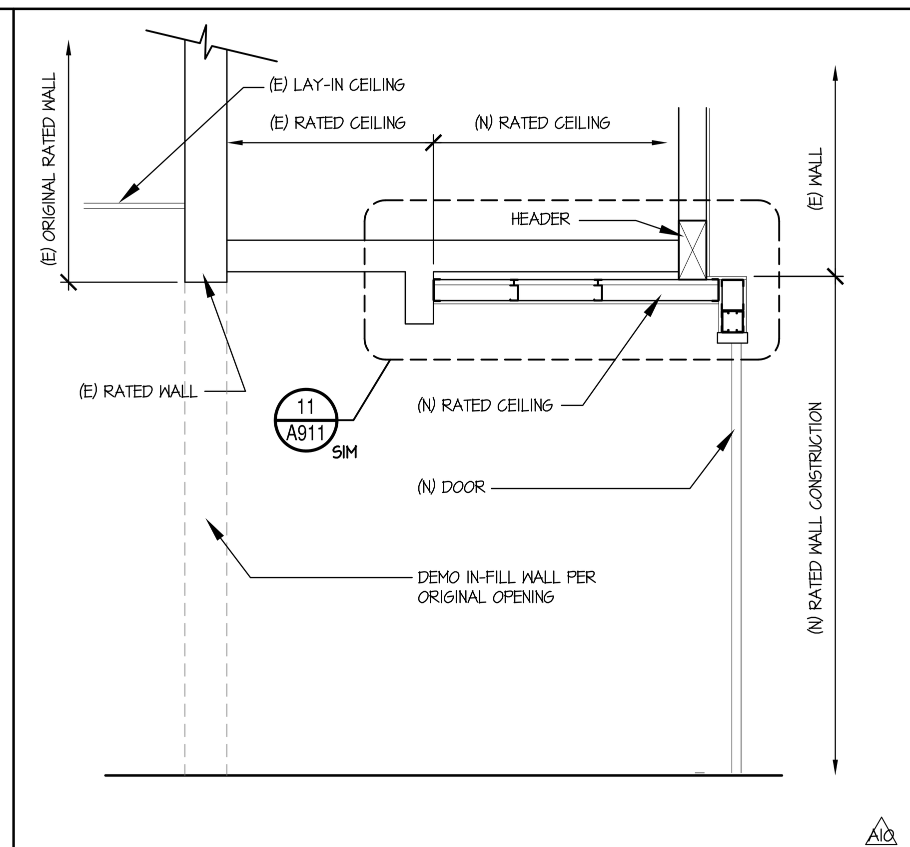

DETAIL - SECTION SCALE: 1/2" = 1'-0" 2

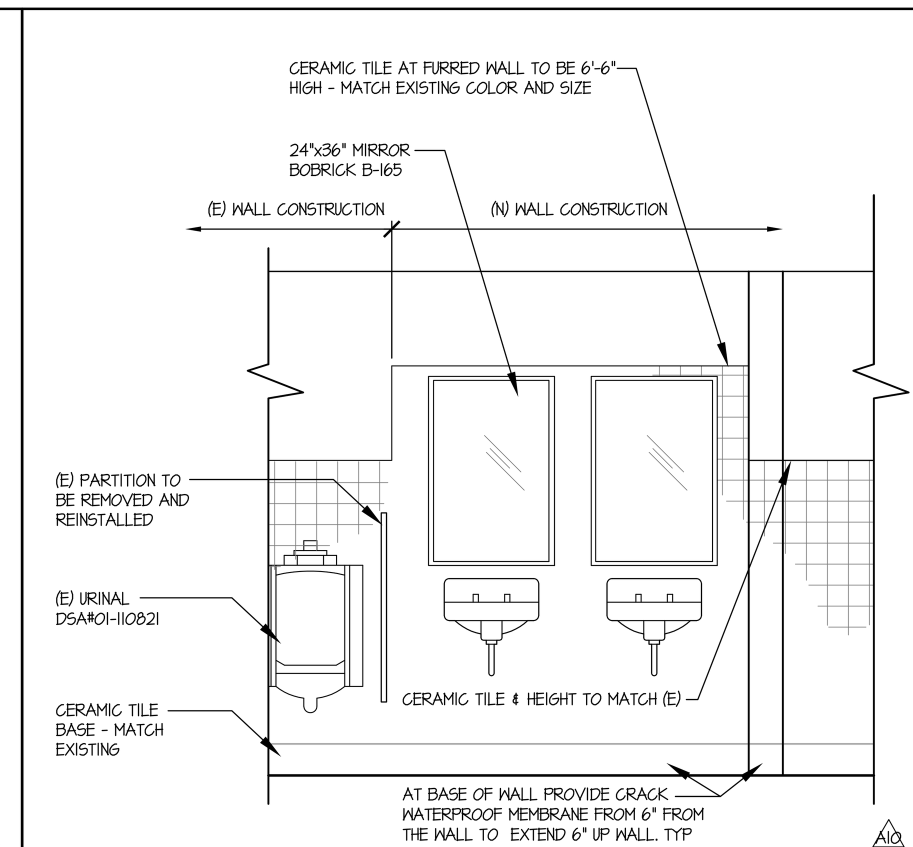

MEN'S REST ROOM ELEVATION SCALE: 1/2" = 1'-0" 3

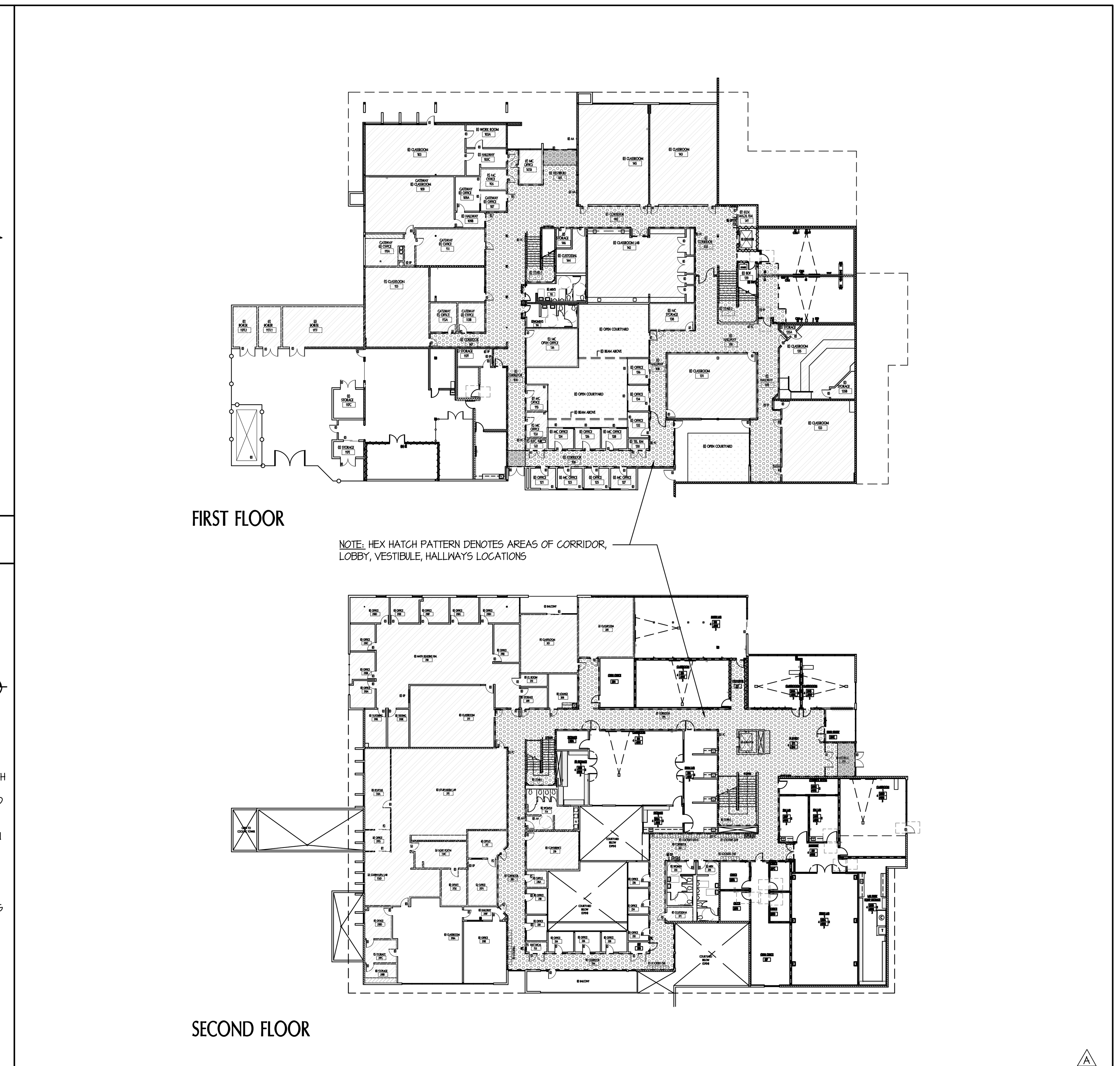

CORRIDOR, LOBBY, VESTIBULE, HALLWAYS LOCATIONS SCALE: 1/4" = 1'-0" 15

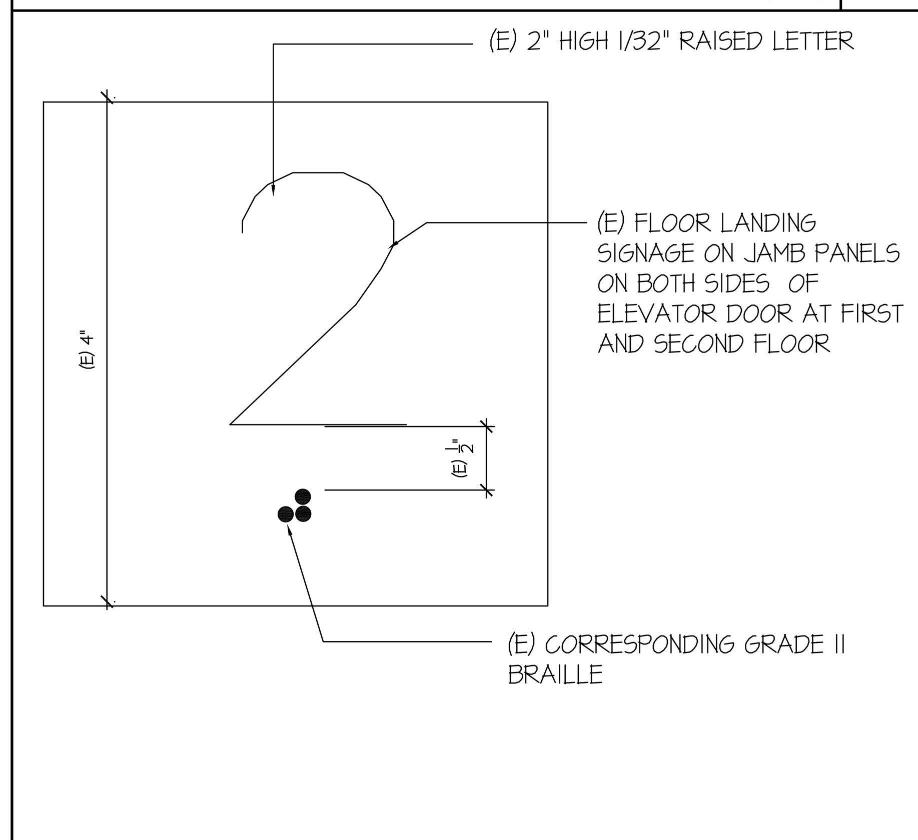

DETAIL - (E) ELEVATOR DOOR JAMB ID - 2ND FLR SCALE: N.T.S. 6

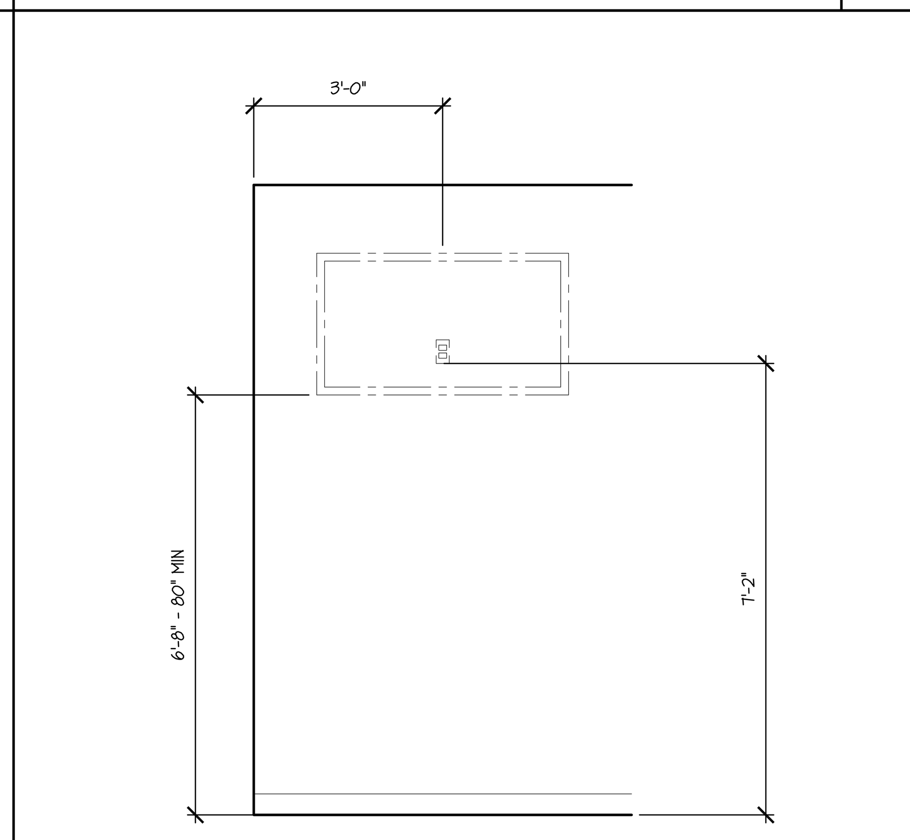

LCD DISPLAY SCREEN SCALE: 1/2" = 1'-0" 7

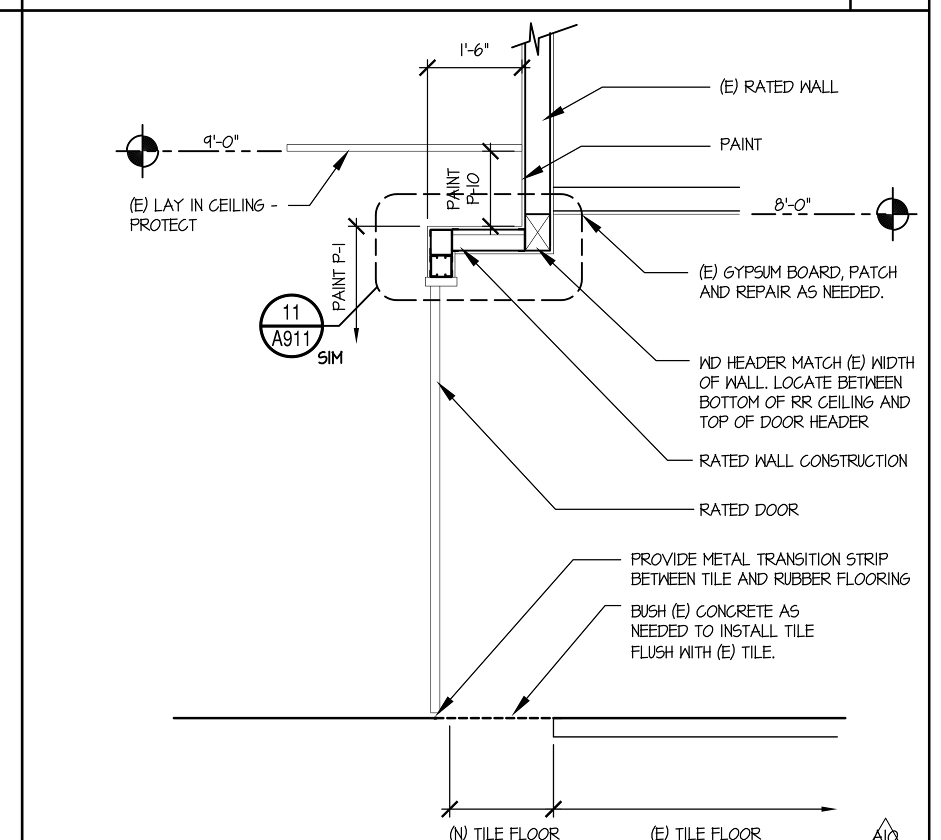

DETAIL - SECTION SCALE: 1/2" = 1'-0" 8

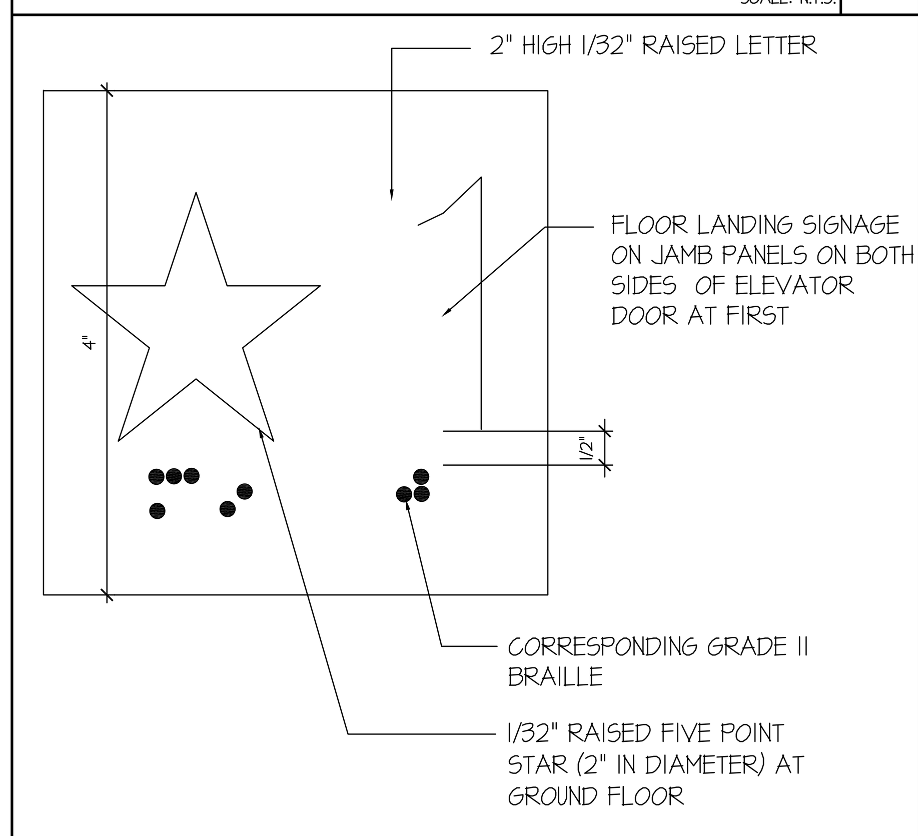

DETAIL - ELEVATOR DOOR JAMB ID - 1ST FLR SCALE: N.T.S. 11

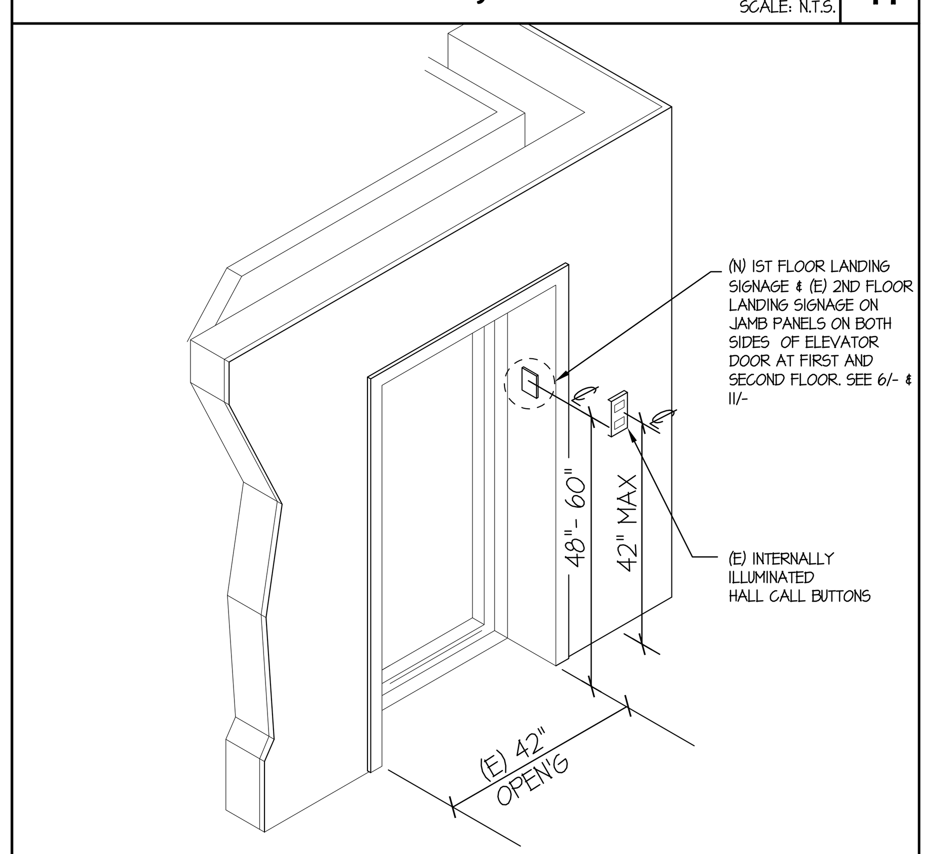

DETAIL - (E) ELEVATOR SCALE: 1/2" = 1'-0" 16

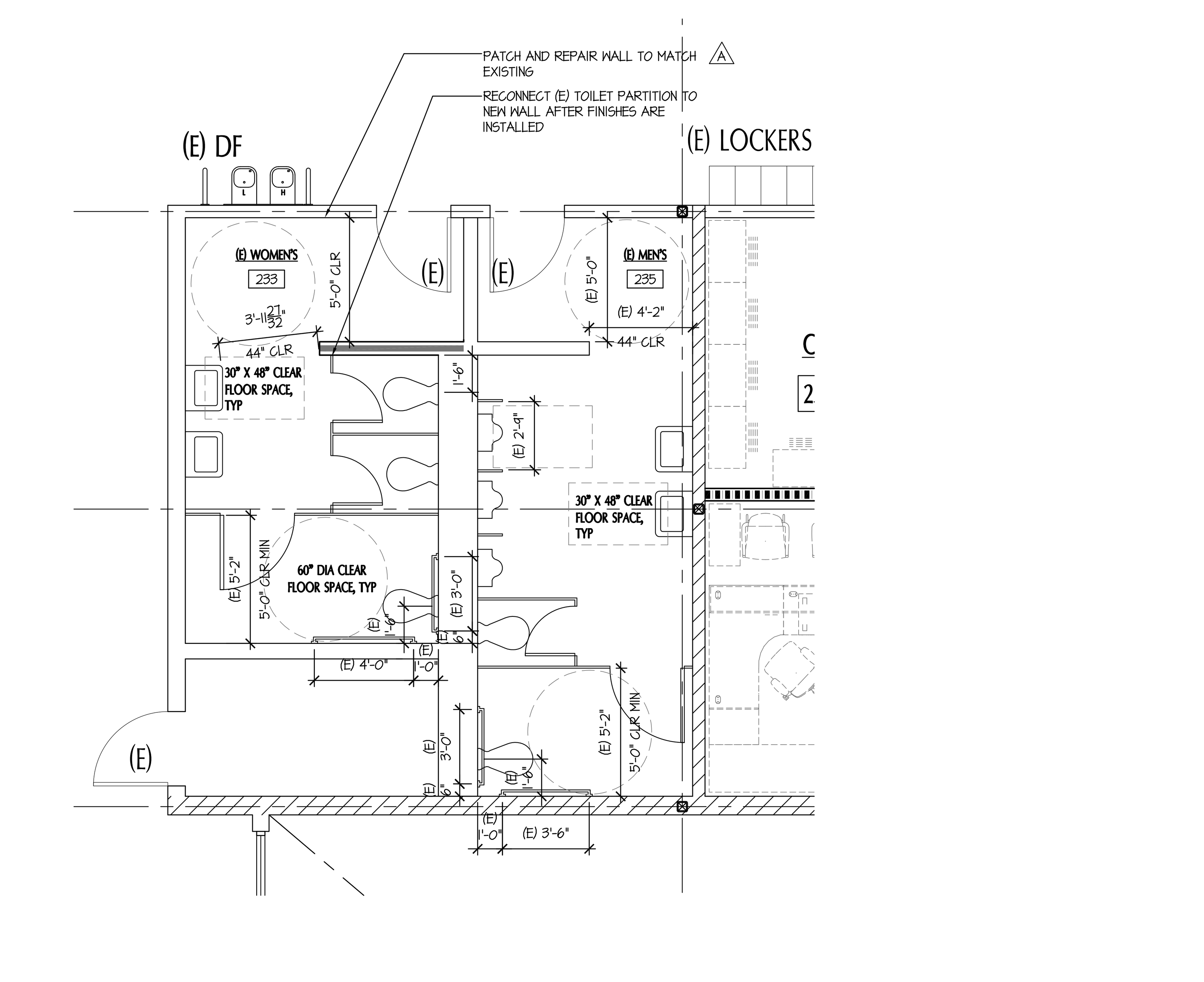

NOTE: DIMENSIONS ARE FROM FACE OF FINISH
AT BASE OF WALL PROVIDE CRACK WATERPROOF MEMBRANE FROM 6" FROM THE WALL TO EXTEND 6" UP WALL, TYP

ENLARGED SECOND FLOOR RESTROOMS SCALE: 1/4" = 1'-0" 18

NOTE: PATCH AND REPAIR (E) TILE FLOOR AND CEILING

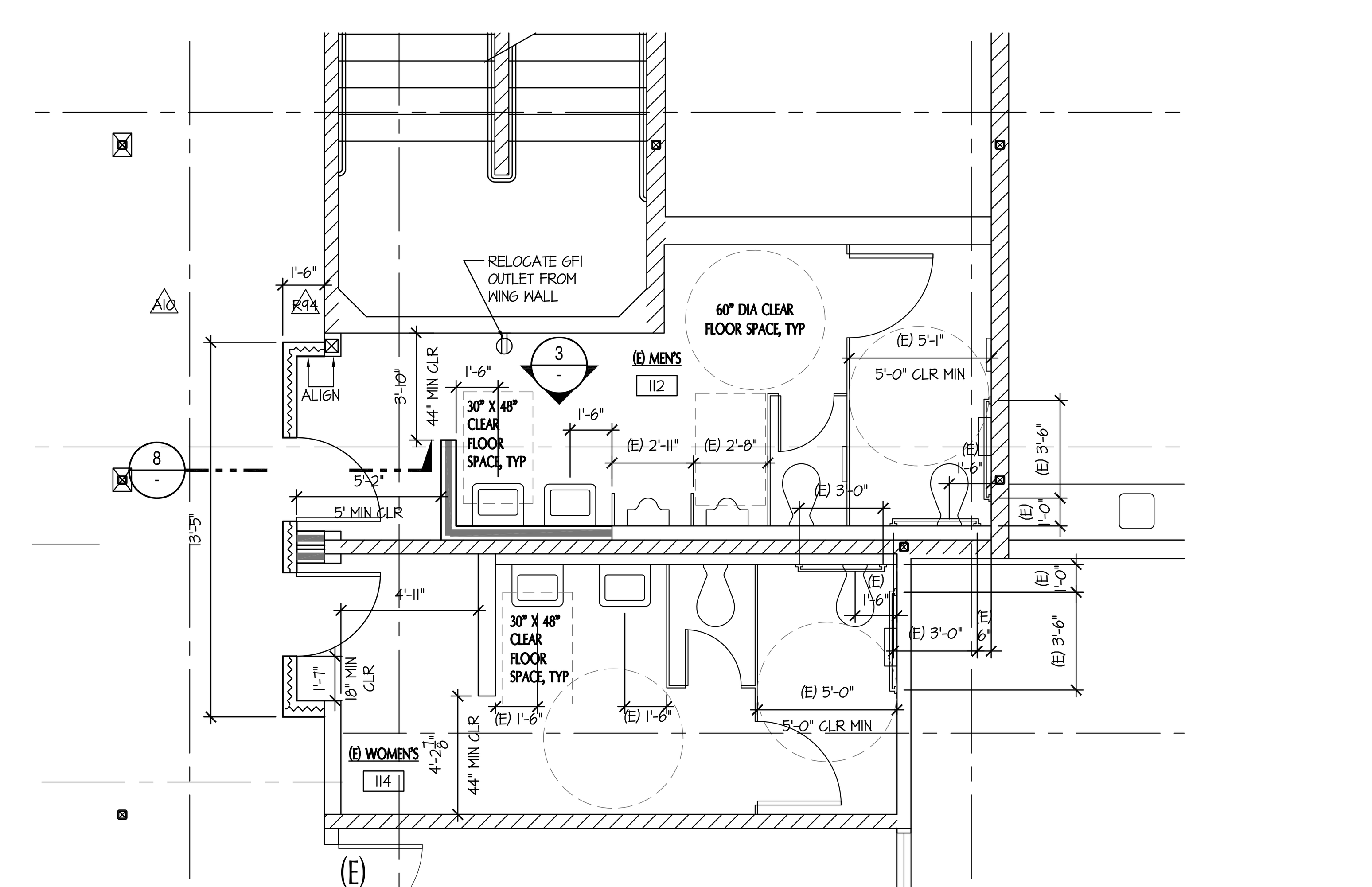

NOTE: DIMENSIONS ARE FROM FACE OF FINISH
TILE ALL INTERIOR RESTROOM NEW WALLS TO MATCH (E) MATERIALS AND HEIGHT, UNO.
AT BASE OF WALL PROVIDE CRACK WATERPROOF MEMBRANE FROM 6" FROM THE WALL TO EXTEND 6" UP WALL, TYP

ENLARGED FIRST FLOOR RESTROOMS SCALE: 1/4" = 1'-0" 20

tBP architecture planning interiors
tBP/Architecture
1777 Oakland Boulevard, Suite 320
Walnut Creek, CA 94596
ph: 925.246.6419
architect

consultant

DIVISION OF THE STATE ARCHITECT
1515 CLAY STREET
OAKLAND, CA 94612
ph:(510) 622-3101
agency

C-4008 APPLIED ARTS & ADMIN RENOVATION
2600 MISSION BELL DRIVE, SAN PABLO, CA 94806

CONTRA COSTA COMMUNITY COLLEGE DISTRICT
500 COURT STREET MARTINEZ, CA 94553
owner

tBP project number: 20865.00
file name: A511_ENL PLANS.DWG
drawn by: checked by:
date: APRIL 20, 2019

rev:	date:	description:
	6/17/2017	BID SET
A	04/21/17	ADDENDUM A
	03/16/18	ASI 10
	06/08/18	RFI 94
	04/20/2019	RECORD SET

drawing title:
ENLARGED PLANS & ELEVATOR DETAILS

drawing no.: A511

drawing of

Record Dwgs

SECOND FLOOR

NO.	ROOM NAME	FLOOR MATERIAL	BASE MATERIAL	WALL COLOR	WALL FINISH	CEILING MATERIALS	CEILING FINISH	REMARKS
201A	CLASSROOM	R-1/R-2	RB-1	P-1/P-2	PES	ACP-3	-	-
201B	CLASSROOM	R-1/R-2	RB-1	P-1/P-2	PES	ACP-3	-	
201C	NURSE READ STUDY	R-1	RB-1	P-1/P-2	PES	(E)	-	
202	MATH LAB	R-1/R-2	RB-1	P-1/P-2	PES	ACP-3	-	
203	CLASSROOM	R-1/R-2	RB-1	P-1/P-2	PES	ACP-3	-	
204	OPEN OFFICE	R-1	RB-1	P-1/P-8	PES	ACP-3	-	
206	EXAM LAB	R-1	RB-1	P-1	PES	ACP-3/(E)	-	
206A	STORAGE	R-1	RB-1	P-1	PES	ACP-3	-	
208	(E) LOUNGE	R-1	RB-1	P-1	PES	(E)	-	
212	(E) CLASSROOM	VCT-3 & VCT-4	RB-1	P-1/P-2	PES	(E)	-	
212A	STORAGE	VCT-3	RB-1	P-1	PES	(E)	-	
212B	(E) STORAGE	VCT-3	RB-1	P-1	PES	(E)	-	
218	(E) OFFICE	C	RB-1	P-1/P-2	PES	(E)	-	
219A	(E) CLASSROOM	(E)	RB-1	P-2	PES/-	(E)	-	PAINT & BASE @ NEW WALL ONLY
219E	(E) OPEN OFFICE	(E)	RB-1	P-1	PES/-	(E)	-	PAINT & BASE @ NEW WALL ONLY
220	(E) OFFICE	C	RB-1	P-1/P-2	PES	(E)	-	
224	(E) OFFICE	C	RB-1	P-1/P-2	PES	(E)	-	
226	(E) OFFICE	C	RB-1	P-1/P-2	PES	(E)	-	
228	(E) OFFICE	C	RB-1	P-1/P-2	PES	(E)	-	
232	(E) OFFICE	C	RB-1	P-1/P-2	PES	(E)	-	
233	(E) WOMEN'S	CT	CT	CT	-	(E) GB	P-1/PSG	WHERE WORK IS DONE, NEW & REPAIR, REPLACE WITH LIKE MATERIALS, PAINT ENTIRE CEILING
234	(E) OFFICE	C	RB-1	P-1/P-2	PES	(E)	-	
236	(E) OFFICE	C	RB-1	P-1/P-2	PES	(E)	-	
237	OPEN OFFICE	R-1	RB-1	P-1/P-8	PES	ACP-3	-	
237A	OFFICE	C	RB-1	P-1/P-2	PES	ACP-3	-	
237B	OFFICE	C	RB-1	P-1/P-2	PES	ACP-3	-	
237C	OFFICE	C	RB-1	P-1/P-2	PES	ACP-3	-	
237D	OFFICE	C	RB-1	P-1/P-2	PES	ACP-3	-	
239	HALLWAY	R-1	RB-1	P-1	PES	ACP-3	-	
239A	SKILLS LAB	R-1/R-2	RB-1	P-1/-P-2	PES	ACP-3	-	
239B	LAB PREP/ EQUIP STORAGE	R-1	RB-1	P-1	PES	ACP-3	-	
239D	CLASSROOM	R-1/R-2	RB-1	P-1/P-2	PES	ACP-3/GB	P-1/ PF	
239E	SIM LAB	R-1	RB-1	P-1	PES	ACP-1	-	
239F	SIM LAB	R-1	RB-1	P-1	PES	ACP-1	-	
239G	CONTROL ROOM	R-1	RB-1	P-1	PES	ACP-1	-	
240	(E) VESTIBULE	R-1/R-2	RB-1	P-1	PES	(E)	-	ADD ALT: CEILING ACP-3
241	(E) LOBBY	R-1/R-2	RB-1	P-1/ P-8/ P-10	PES	(E)	-	ADD ALT: CEILING ACP-3
243	(E) CORRIDOR	R-1/R-2	RB-1	P-1/P-10	PES	(E)	-	ADD ALT: CEILING ACP-3
244	(E) CORRIDOR	R-1/R-2	RB-1	P-1/P-10	PES	(E)	-	ADD ALT: CEILING ACP-3
245	(E) CORRIDOR	R-1/R-2	RB-1	P-1/P-10	PES	(E)	-	ADD ALT: CEILING ACP-3
246	(E) CORRIDOR	R-1/R-2	RB-1	P-1/P-10	PES	(E)	-	ADD ALT: CEILING ACP-3
247	CORRIDOR	R-2	RB-1	P-1	PES	GB	P-1/ PF	
230	IDF	R-1	RB-1	P-1/ BF	PES	GB/BF	P-1/ PF	

INTERIOR FINISH SCHEDULE

FIRST FLOOR

NO.	ROOM NAME	FLOOR MATERIAL	BASE MATERIAL	WALL COLOR	WALL FINISH	CEILING MATERIALS	CEILING FINISH	REMARKS
101	(E) VESTIBULE	R-1/R-2	RB-1	P-1/ P-10	PES	(E)	-	ADD ALT: WHITE WASH WOOD CEILING
102	(E) CORRIDOR	R-1/R-2	RB-1	P-1/ P-10	PES	(E)	-	ADD ALT: WHITE WASH WOOD CEILING & ACP-1
103C	(E) HALLWAY	VCT-3	RB-1	P-1	PES	(E)	-	~~WHERE WORK IS DONE, NEW & REPAIR, REPLACE WITH LIKE MATERIALS~~
104	(E) CORRIDOR	R-1/R-2	RB-1	P-1/ P-10	PES	(E)	-	ADD ALT: CEILING ACP-1
106	(E) CORRIDOR	R-1/R-2	RB-1	P-1/ P-10	PES	(E)	-	ADD ALT: CEILING ACP-1
107	(E) OFFICE	C	RB-1	P-1/ P-2	PES	(E)	-	
108	(E) CORRIDOR	R	RB-1	P-1/ P-10	PES	(E)	-	ADD ALT: CEILING ACP-1
109A	(E) OFFICE	C	RB-1	P-1/ P-2	PES	(E)	-	
110	(E) CORRIDOR	R-1/R-2	RB-1	P-1/ P-10	PES	(E)	-	ADD ALT: CEILING ACP-1
112	MEN'S RESTROOM	CT	CT	CT/P-1	-	(E)/(N) GB	P-1/PSG	WHERE WORK IS DONE, NEW & REPAIR, REPLACE WITH LIKE MATERIALS. PAINT ENTIRE CEILING & PAINT ENTIRE WALL WHERE WORK IS DONE
113C	ARCHIVE	SC	RB-1	-	-	(E)	-	
114	WOMEN'S RESTROOM	CT	CT	CT/P-1	-	(E)/(N) GB	P-1/PSG	WHERE WORK IS DONE, NEW & REPAIR, REPLACE WITH LIKE MATERIALS. PAINT ENTIRE CEILING & PAINT ENTIRE WALL WHERE WORK IS DONE
117	OPEN OFFICE	VCT-3	RB-1	P-1	PES	ACP-1	-	
117A	OFFICE	VCT-3	RB-1	P-1/P-2	PES	ACP-1	-	
117B	STORAGE	SC	RB-1	P-1	PES	(E)	P-1/PF	FRP WAINSCOT
117C	(E) STORAGE	(E)	RB-1	P-1	PSG	(E)	P-1/PF	
117D	STORAGE	SC	RB-1	P-1	PES	GB	P-1/PF	
117E	(E) STORAGE	(E)	RB-1	P-1	PSG	(E)	P-1/PF	
117F	(E) STORAGE	VCT-3	RB-1	P-1	PSG	GB	P-1/PF	
117G	DATA	R-1	RB-1	P-1/ BF	PES	GB/BF	P-1/PF	
117H	CONFERENCE	VCT-3	RB-1	P-1	PES	ACP-1	-	
137	CLASSROOM	R-1/R-2	RB-1	P-1/P-2	PES	ACP-1		
140	CLASSROOM	R-1/R-2	RB-1	P-1/P-2	PES	ACP-1		
147	(E) CORRIDOR	R-2	RB-1	P-1	PES	(E)	-	ADD ALT: CEILING ACP-1
148	(E) CORRIDOR	R-1/R-2	RB-1	P-1	PES	(E)	-	ADD ALT: CEILING ACP-1
150	(E) CORRIDOR	R-1/R-2	RB-1	P-1/P-10	PES	(E)	-	ADD ALT: CEILING ACP-1
150A	VESTIBULE	R-2	RB-1	P-1	PES	GB	P-1/PF	
-	(E) STAIR #1	R-3	RB-1	P-10	PES	(E)	-	ADD ALT: CEILING ACP-1
-	(E) STAIR #2	R-3	RB-1	P-10	PES	(E)	-	ADD ALT: CEILING ACP-1
139	(E) BDF	(E)	(E)	P-1	PES	(E)		PAINT WALL WHERE WORK IS DONE

INTERIOR FINISH LEGEND

FLOOR FINISHES

C	CARPET TILE - TANDUS - STYLE - "DISTRICT 03500" COLOR: GREEN SPACE 79002
VCT-1	VINYL COMPOSITION TILE - ARMSTRONG MIGRATIONS BIOBASED TILE COLOR: T3513 GOLDEN SANDS
VCT-2	VINYL COMPOSITION TILE - ARMSTRONG MIGRATIONS BIOBASED TILE COLOR: T3514 LOAM BROWN
VCT-3	VINYL COMPOSITION TILE - ARMSTRONG STANDARD EXCELON COLOR: 51804 EARTHSTONE GREIGE
VCT-4	VINYL COMPOSITION TILE - ARMSTRONG STANDARD EXCELON COLOR: 51947 BASIL GREEN
R-1	FIELD: MONDO HG 102 - HARMONI "STONE PIERRE"
R-2	ACCENT: MONDO HG 118 - HARMONI "DEEP SEA"
R-3	RUBBER FLOOR TREADS - COLOR TO MATCH R-1
SC	CONCRETE W/ RESINOUS FLOORING
(E)	EXISTING CONDITION

CEILING FINISHES

ACP-1	ACOUSTICAL CEILING PANEL ARMSTRONG - "FINE FISSURED HIGH NRC" 2'X4'
ACP-2	ACOUSTICAL CEILING PANEL ARMSTRONG - "CORTEGA" 2'X4'
ACP-3	FIRE GUARD ACOUSTICAL CEILING PANEL FIRECODE AURATONE BY USG - 2'X4' - PATTERN TO MATCH ACP-1 - SEE DETAIL 10/A912
BF	BLACK FACED INSUL. PANEL INSTALLED AT WALLS PER DETAIL 9/A921
GB	GYPSUM BOARD CEILING - PAINT
XC	EXISTING OPEN CEILING - NO SEALER OR PAINT U.O.N.

WALL FINISHES

AP-1	FABRIC WRAPPED ~~ACOUSTICAL~~ TACKABLE WALL PANEL - GUILFORD OF MAINE - STYLE 2539 DRIFT; COLOR 050 SLATE
AP-2	FABRIC WRAPPED ~~TACKABLE~~ ACOUSTICAL WALL PANEL - GUILFORD OF MAINE - STYLE 2538 BLOCK PARTY; COLOR 021 CANYON
CT	CERAMIC TILE - TO MATCH EXISTING TILE
P-1	FIELD COLOR: WHITE ZIN DE W315
P-2	ACCENT COLOR: CANARY ISLAND DE 6164
~~P-3~~	~~ACCENT COLOR: LAREDO ROAD DE 5369~~
~~P-4~~	~~OLD BOOT DE 6133~~
~~P-5~~	~~GHOST TOWN DE5327~~
~~P-6~~	~~DEEP CRIMSON DE A152~~
P-7	LEGENDARY GRAY DE 6369
P-8	ACCENT COLOR: DILL GRASS DE 5536
~~P-9~~	~~RUDDY OAK DE 5188~~
P-10	SILVER LINED DE 6353
P-11	CHARCOAL SMUDGE DE 6370
~~P-12~~	~~DRIFTWOOD DE 5328~~
P-13	BLACK BAY DE A188
BF	BLACK FACED INSUL. PANEL INSTALLED AT WALLS PER DETAIL 9/A921

WALL BASE

RB-1	BURKE MERCER BURKE BASE SBR RUBBER #104 FUDGE, 4" HIGH
CT	CERAMIC TILE TO MATCH EXISTING

ABBREVIATIONS

SEE SHEET **A0.2** FOR ADDL ABBREVIATIONS USED IN THIS PROJECT

AFF	ABOVE FINISH FLOOR	PES	PAINT EGG SHELL
BD	BOARD	PF	PAINT FLAT
CS	CONCRETE - SEALED	PG	PAINT GLOSS
EP	EPOXY PAINT	PLS	PAINT LOW SHEEN
EXPSD	EXPOSED	PSG	PAINT SEMI GLOSS
F	FACTORY FINISH	SF	STAIN FINISH
FRP	FIBER REINFORCED PANELS	SLR	SEALER
GL	GLASS		
GYP	GYPSUM		
MTL	METAL		

GENERAL NOTES

1. SEE FINISH FLOOR PLANS FOR LOCATIONS, SIZES AND QUANTITIES OF ACOUSTICAL WALL PANELS
2. PREP & PAINT ALL EXPOSED ITEMS BUT NOT LIMITED TO DUCTWORK, WIRES, PIPING CONDUIT, CABLE TRAYS & LIGHT FIXTURE MOUNTS AND ITS SUPPORTS.
3. ALL DOOR/WINDOW FRAMES ALONG THE CORRIDOR SHALL BE PAINTED (P-7) (INSIDE AND OUTSIDE) (DO NOT PAINT ALUMINUM WINDOW FRAME)
4. (E) WOOD WALL AND CEILING PANELS - PROTECT IN PLACE - DO NOT PAINT
5. PROVIDE BASE MATERIAL AT ALL COLUMNS WITHIN SCOPE OF WORK
6. BEAD BLAST FLOOR BEFORE SEALING CONCRETE
7. AT ACP-1 & ACP-2 CEILING APPLICATION PROVIDE A 6" BATT INSULATION ABOVE CEILING TILE
8. AT ACP-3, SEE DETAIL 10/A912 FOR ADDITIONAL INFORMATION

architecture planning interiors

tBP/Architecture
1777 Oakland Boulevard, Suite 320
Walnut Creek, CA 94596
ph: 925.246.6419

architect

consultant

IDENTIFICATION STAMP
DIV. OF THE STATE ARCHITECT
OFFICE OF REGULATION SERVICES
APPL # 01-116617
FILE NO. 7-C1
AC FLS SS
DATE

DIVISION OF THE STATE ARCHITECT
1515 CLAY STREET
OAKLAND, CA 94612
ph: (510) 622-3101

agency

C-4008 APPLIED ARTS & ADMIN RENOVATION

2600 MISSION BELL DRIVE, SAN PABLO, CA 94806

CONTRA COSTA COMMUNITY COLLEGE DISTRICT
500 COURT STREET MARTINEZ, CA 94553

owner

tBP project number: 20865.00
file name: A611 FINISH SCHEDULE.DWG
drawn by: checked by:
date: APRIL 20, 2019

rev:	date:	description:
	8/17/2017	BID SET
A	09/21/17	ADDENDUM A
A03	12/13/17	ASI 03
A08	01/22/18	ASI 08
A10	03/16/18	ASI 10
	04/20/2019	RECORD SET

THIS DRAWING AND THE DESIGNS, DEPICTIONS, IDEAS AND OTHER INFORMATION CONTAINED HEREIN CONSTITUTE UNPUBLISHED WORK OF tBP/ARCHITECTURE AND SHALL REMAIN PROPERTY OF tBP/ARCHITECTURE IN PERPETUITY. NO PART THEREOF SHALL BE REPRODUCED, DISCLOSED, DISTRIBUTED, SOLD, PUBLISHED OR OTHERWISE USED IN ANY WAY WITHOUT THE ADVANCED EXPRESS WRITTEN CONSENT OF tBP/ARCHITECTURE.

drawing title: FINISH SCHEDULE

drawing no.: A611

drawing of

Record Dwgs

ABBREVIATIONS

ALUM	ALUMINUM
AUTO	AUTO-ASSIST DOOR WITH WALL PUSH PLATES
CA	CARD ACCESS SYSTEM
EP	EPOXY PAINT
F	FACTORY FINISH
FG	FIRE-RATED GLAZING
GL	GLASS
HCN	HOLLOW CORE NATURAL FINISH
HCP	HOLLOW CORE PAINT FINISH
HM	HOLLOW METAL
LAQ	LACQUER FINISH
MAWC	MATCH ADJ. WALL COLOR
ME	MATCH EXTG
MH	MAGNETIC HOLD
EC	ELECTRIFIED CLOSER
MASD	MATCH ADJ STAIN DOORS
MAMF	MATCH ADJ MTL FRAME
N/A	NOT APPLICABLE
NIC	NOISE ISOLATION CLASS
PE	PAINT EGGSHELL
PF	PAINT FLAT
PG	PAINT GLOSS
PH	EMERGENCY EGRESS HARDWARE
PS	PREFINISHED STEEL
PSG	PAINT SEMI-GLOSS
PTS	PILE TYPE SEALS (HEAD AND JAMB)
S	SEAL
SCN	SOLID CORE NATURAL FINISH
SCP	SOLID CORE PAINT FINISH
SCPL	SOLID CORE PLASTIC LAMINATE
SCS	SOLID CORE STAIN FINISH
SF	STAIN FINISH
SG	SOUND GASKETED
SST	STAINLESS STEEL
STL	STEEL
T	TEMPERED GLASS
UC	UNDERCUT DOOR
VF	VARNISH
WD	FLUSH WOOD DOOR

NOTES

1. DOORS SHALL BE 1-3/4" THICK, UNLESS NOTED OTHERWISE.
2. THE LETTER 'P' FOLLOWING THE 'DOOR TYPE' DESIGNATION IN THE DOOR SCHEDULE INDICATES PAIR OF DOORS. BOTH DOOR LEAVES ARE THE SAME SIZE, UNLESS NOTED OTHERWISE.
3. DOOR REQUIREMENTS
   - ALL EXTERIOR DOORS IN BUILDINGS, INCLUDING, BUT NOT LIMITED TO DOORS OF TOILETS AND STORAGE ROOMS, SHALL CONFORM WITH THE REQUIREMENTS OF THE LATEST EDITION OF THE CBC
   - EXIT DOOR SHALL BE OPERABLE FROM THE INSIDE WITHOUT THE USE OF A KEY OR ANY SPECIAL KNOWLEDGE OR EFFORT.
   - HAND ACTIVATED DOOR OPENING HARDWARE SHALL BE CENTERED BETWEEN 34" MIN AND 44" MAX ABOVE FIN. FLR.
   - DEAD BOLTS ARE NOT PERMITTED UNLESS OPERABLE WITH A SINGLE EFFORT LEVER TYPE HARDWARE.
   - DOORS SERVING ROOMS OR SPACES WITH AN OCCUPANCY LOAD OF 50 OR MORE IN A GROUP A OCCUPANCY AND EXIT ACCESS DOORS ARE REQUIRED TO BE PROVIDED WITH PANIC HARDWARE OR FIRE EXIT HARDWARE (CBC 1010.1.10).
   - ALL FIRE DOOR LABELS SHALL COMPLY WITH C.B.C. 716.5.7.1
4. FOR AUTO ASSIST PUSH PLATES, MOUNTING HEIGHTS & TYPICAL CLEARANCES ARE PER DETAILS **1-3** THIS SHEET.
5. FOR COLOR LEGEND, SEE FINISH SCHEDULE. ALL INTERIOR HM DOORS AND FRAMES SHALL BE PAINTED SEMI-GLOSS PAINT.
6. FOR SIGNAGE TYPES, LOCATIONS, ROOM NUMBER AND CONVERSION MATRIX, SEE SHEET **A981** AND FINISH PLANS
7. FIXED PANELS SHALL BE OF THE SAME MATERIAL, CONSTRUCTION, AND THICKNESS AS DOOR LEAF, AND SHALL BE PROVIDED BY THE SAME MANUFACTURER, UNLESS NOTED OTHERWISE.
8. GLASS IN ALL FIRE RATED DOORS SHALL BE U.L. LISTED, NO WIRE GLASS, INSTALLED IN STEEL FRAMES.
9. GLASS IN NON-RATED EXTERIOR DOORS SHALL BE CLEAR TEMPERED GLASS.

11. WHERE DOOR W/ SG OCCUR AND GLAZING IS PRESENT, GLAZING SHALL BE 3/8" LAMINATE GLASS

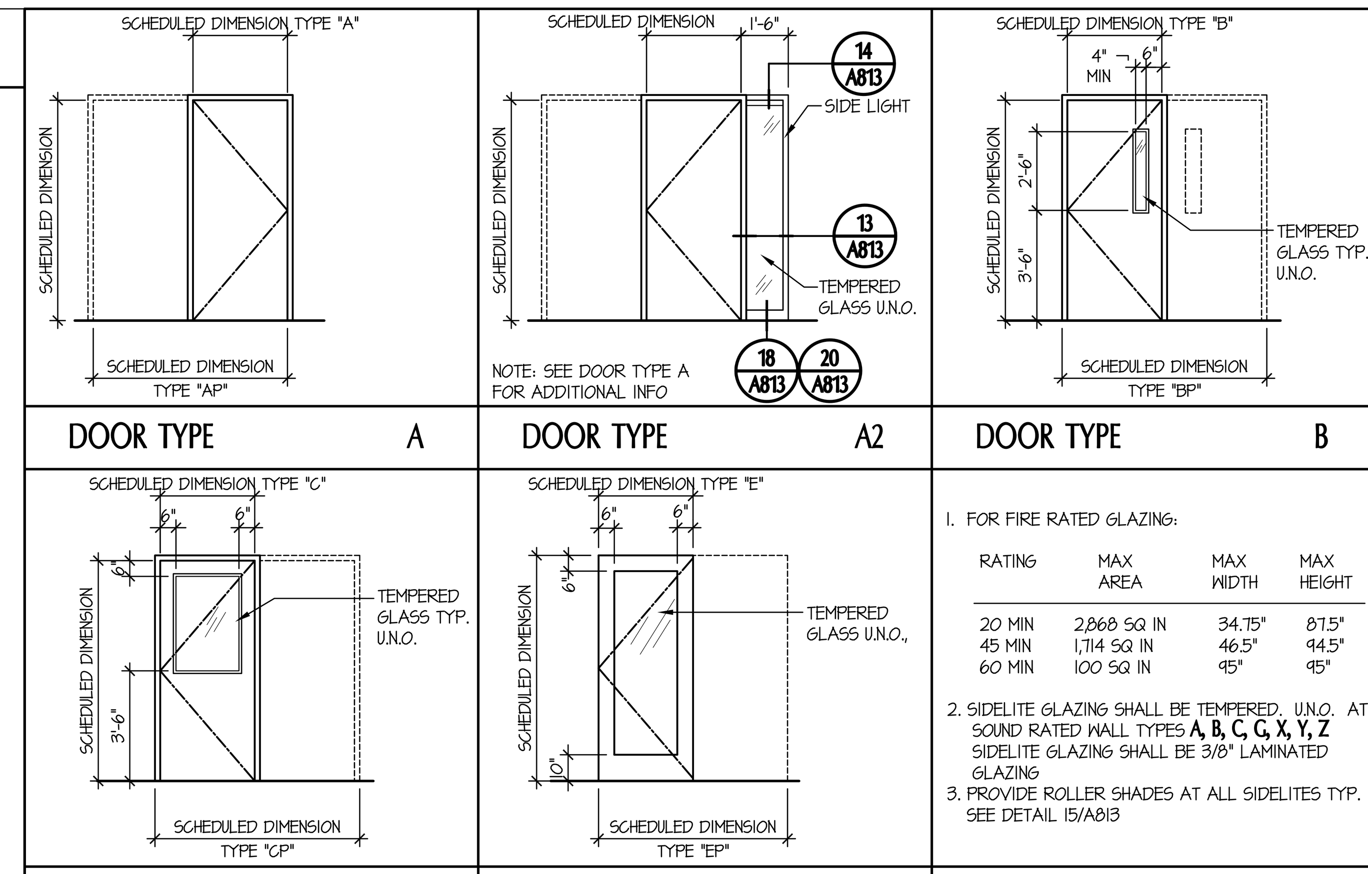

DOOR TYPE A

DOOR TYPE A2

DOOR TYPE B

DOOR TYPE C

DOOR TYPE E

1. FOR FIRE RATED GLAZING:

RATING	MAX AREA	MAX WIDTH	MAX HEIGHT
20 MIN	2,868 SQ IN	34.75"	87.5"
45 MIN	1,714 SQ IN	46.5"	94.5"
60 MIN	100 SQ IN	95"	95"

2. SIDELITE GLAZING SHALL BE TEMPERED. U.N.O. AT SOUND RATED WALL TYPES **A, B, C, G, X, Y, Z** SIDELITE GLAZING SHALL BE 3/8" LAMINATED GLAZING
3. PROVIDE ROLLER SHADES AT ALL SIDELITES TYP. SEE DETAIL 15/A813

GENERAL NOTES - DOOR TYPES

DOOR SCHEDULE

NOTE: ALL DETAILS ARE IN SHEET A822, U.N.O.

	DOOR NO.	(E) OR (N)	HARDWARE GROUP	DIMENSION WIDTH	DIMENSION HEIGHT	DOOR TYPE	DOOR MAT.	DOOR FINISH	DOOR COLOR	FRAME MAT.	FRAME FINISH	FRAME COLOR	DETAILS HEAD	DETAILS JAMB	DETAILS THRESHOLD	ASSEMBLY RATING	REMARKS
FIRST FLOOR	108	(N)	01	6'-0"	7'-0"	BP	HM	PSG		HM	PSG (A)	P-7	10 SIM / A822	4 / A822	- / -	20 MIN	PH, EC
	(A10) 112	(N)	16	3'-0"	7'-0"	A	SCS	MASD		HM	PSG	P-7	10	9	-	20 MIN	
	114	(N)	16	3'-0"	7'-0"	A	SCS	MASD		HM	PSG	P-7	10	9	-	20 MIN	
	117.1	(N)	03	3'-0"	7'-0"	B	SCS	MASD		HM	PSG	P-7	3 / A921	3 / A921	3 / A921		SG
	(A) 117.2	(N)	(R44) 07CR	3'-0"	7'-0"	B	SCS	MASD		HM	PSG	P-7	3 / A921	3 / A921	3 / A921	20 MIN	SG
	117A	(N)	02	3'-0"	7'-0"	A2	SCS	MASD		HM	PSG	P-7	3 / A921	3 / A921	3 / A921		SG
	117D	(N)	05	6'-0"	7'-0"	AP	HM	MASD		HM	PSG	P-7	10	9	- / -	45 MIN	
	117G	(N)	(R44) 04CR	3'-0"	7'-0"	A	HM	PSG		HM	PSG	P-7	10	9	- / -		
	(A) 117H	(N)	10	3'-0"	7'-0"	A	SCS	PSG		HM	PSG	P-7	3 / A921	3 / A921	3 / A921		SG
	(A10) 137	(N)	17	3'-0"	7'-0"	B	SCS	MASD		HM	PSG	P-7	3 / A921	3 / A921	3 / A921	20 MIN	SG
	140	(N)	18	3'-0"	7'-0"	B	SCS	MASD		HM	PSG	P-7	3 / A921	3 / A921	3 / A921	20 MIN	SG
	139	(N)	19	(R99) 2'-8"	7'-0"	A	HM	PSG		HM	PSG	P-7	10	9	-	20 MIN	CARD READER
	150	(N)	01	6'-0"	7'-0"	BP	HM	PSG		HM	PSG	P-7	10 SIM	4	- / -	20 MIN	PH, EC
SECOND FLOOR	201A	(N)	(R44) 06CR	3'-0"	7'-0"	B	SCS	MASD		HM	PSG	P-7	3 / A921	3 / A921	3 / A921	20 MIN	SG
	201B	(N)	(R44) 06CR	3'-0"	7'-0"	B	SCS	MASD		HM	PSG	P-7	3 / A921	3 / A921	3 / A921	20 MIN	SG
	201C	(N)	07	3'-0"	7'-0"	B	SCS	MASD		HM	PSG	P-7	3 / A921	3 / A921	3 / A921	20 MIN	SG
	202	(N)	(R44) 07CR	3'-0"	7'-0"	B	SCS	MASD		HM	PSG	P-7	3 / A921	3 / A921	3 / A921	20 MIN	SG
	203	(N)	(R44) 08CR	3'-0"	7'-0"	B	SCS	MASD		HM	PSG	P-7	3 / A921	3 / A921	3 / A921	20 MIN	SG
	204	(N)	(R44) 07	3'-0"	7'-0"	B	SCS	MASD		HM	PSG	P-7	3 / A921	3 / A921	3 / A921	20 MIN	SG
	206	(N)	(R44) 07CR	3'-6"	7'-0"	B	SCS	MASD		HM	PSG	P-7	3 / A921	3 / A921	3 / A921	20 MIN	SG
	206.1	(N)	09 (R28)	5'-6"	7'-0"	BP	SCS	MASD		HM	PSG	P-7	3 / A921	3 / A921	3 / A921		SG W/ ASTRAGAL SEAL, 3'-0" & 2'-6" PAIR DOOR (R28)
	206A	(N)	11	3'-6"	7'-0"	A	SCS	MASD		HM	PSG	P-7	10	9	- / -		
	206A1	(N)	10	3'-6"	7'-0"	A	SCS	MASD		HM	PSG	P-7	10	9	- / -		
	212	(N)	(R44) 07CR	3'-6"	7'-0"	B	SCS	MASD		HM	PSG	P-7	3 / A921	3 / A921	3 / A921	20 MIN	SG
	212A	(N)	15	3'-6"	7'-0"	A	SCS	MASD		HM	PSG	P-7	10	9	- / -		
	212B	(N)	09	6'-0"	7'-0"	AP	SCS	MASD		HM	PSG	P-7	10	9	- / -		
	230	(N)	(A) 04	3'-0"	7'-0"	A	SCS	MASD		HM	PSG	P-7	10	9	- / -	20 MIN	
	237	(N)	07	3'-0"	7'-0"	B	SCS	MASD		HM	PSG	P-7	10	9	- / -	20 MIN	
	237A	(N)	02	3'-0"	7'-0"	A	SCS	MASD		HM	PSG	P-7	3 / A921	3 / A921	3 / A921		SG
	237B	(N)	02	3'-0"	7'-0"	A	SCS	MASD		HM	PSG	P-7	3 / A921	3 / A921	3 / A921		SG
	237C	(N)	02	3'-0"	7'-0"	A2	SCS	MASD		HM	PSG	P-7	3 / A921	3 / A921	3 / A921		SG
	237D	(N)	02	3'-0"	7'-0"	A2	SGS	MASD		HM	PSG	P-7	3 / A921	3 / A921	3 / A921		SG
	239	(N)	(R44) 13CR	6'-0"	7'-0"	BP	SCS	MASD		HM	PSG	P-7	10	9	- / -	20 MIN	
	239A	(N)	12	6'-0"	7'-0"	EP	ALUM	F		AL	F	P-7	14	15	- / -		SG - SEE DETAIL 3/A921 FOR ADDITIONAL INFORMATION
	239B	(N)	14	3'-0"	7'-0"	A	SCS	MASD		HM	PSG	P-7	10	9	- / -		
	239D	(N)	08	3'-0"	7'-0"	B	SCS	MASD		HM	PSG	P-7	3 / A921	3 / A921	3 / A921		SG
	239E	(N)	10	4'-0"	7'-0"	C	SCS	MASD		HM	PSG	P-7	3 / A921	3 / A921	3 / A921		SG
	239F	(N)	10	4'-0"	7'-0"	C	SCS	MASD		HM	PSG	P-7	3 / A921	3 / A921	3 / A921		SG
	239G	(N)	(R44) 03CR	3'-0"	7'-0"	B	SCS	MASD		HM	PSG	P-7	3 / A921	3 / A921	3 / A921	20 MIN	SG

NOTE:

S.E.D. FOR LOW VOLTAGE WIRING AT ACTUATORS, DOOR OPERATORS TYP.

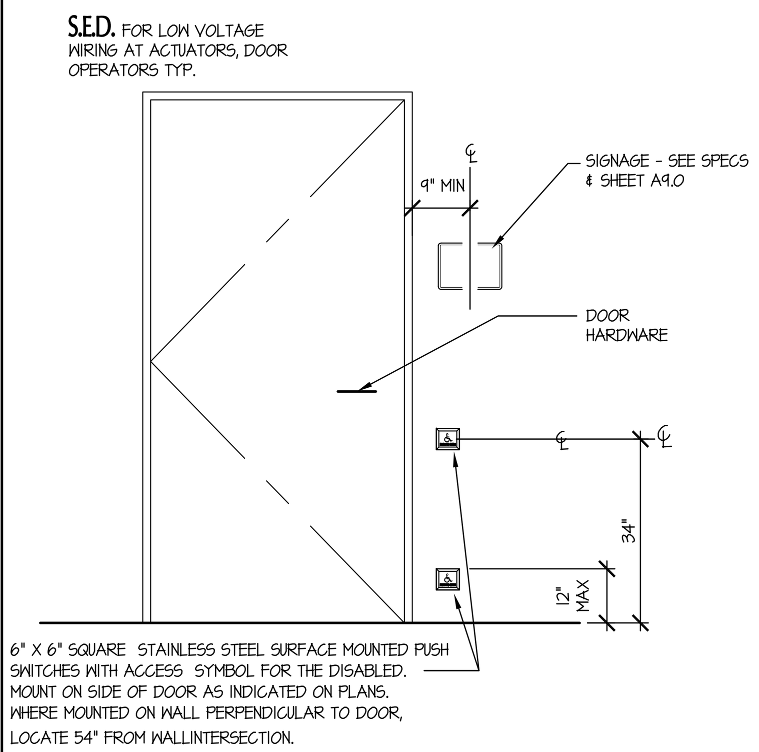

6" X 6" SQUARE STAINLESS STEEL SURFACE MOUNTED PUSH SWITCHES WITH ACCESS SYMBOL FOR THE DISABLED. MOUNT ON SIDE OF DOOR AS INDICATED ON PLANS. WHERE MOUNTED ON WALL PERPENDICULAR TO DOOR, LOCATE 54" FROM WALL INTERSECTION.

AUTO DOOR OPENER SWITCH — N.T.S. — 3

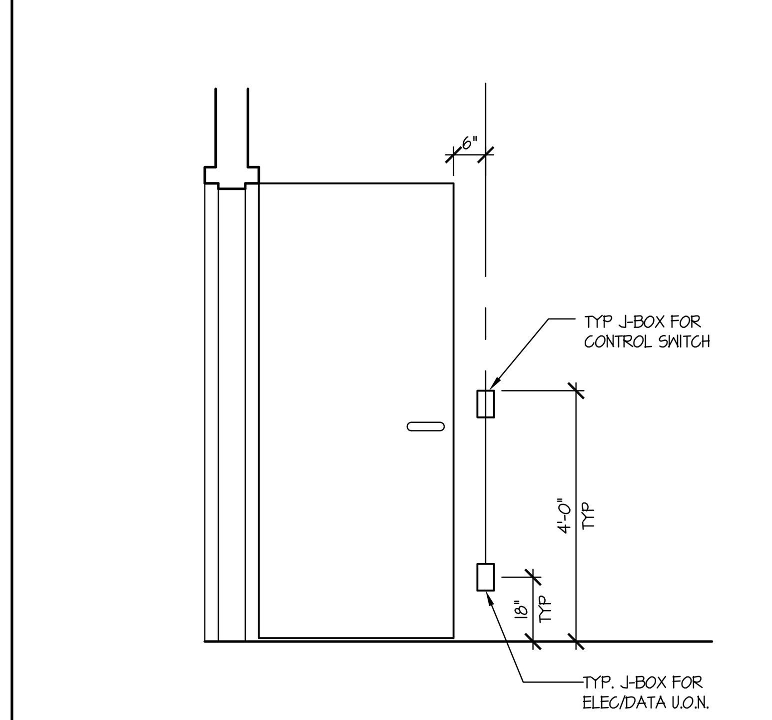

ELEVATION (DOOR IN OPEN POSITION)

NOTE : THIS ELEVATION INDICATES TYPICAL MOUNTING HEIGHTS ONLY - SEE PLANS FOR EXACT LOCATIONS.

DEVICE MOUNTING HEIGHTS — N.T.S. — 2

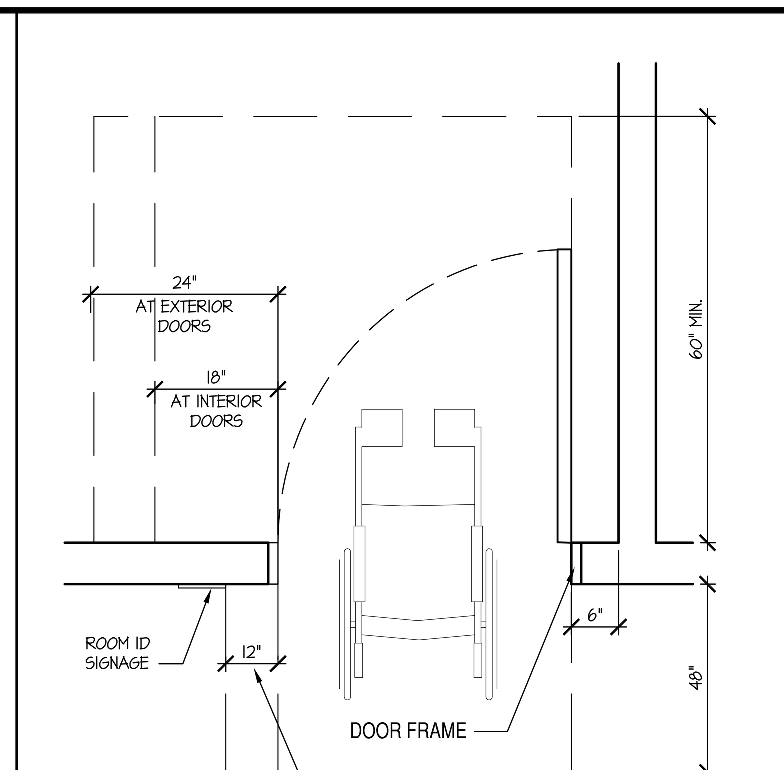

PROVIDE THIS ADDITIONAL SPACE IF DOOR IS EQUIPPED WITH BOTH A LATCH AND A CLOSER

ACCESSIBLE DOOR CLEARANCES — N.T.S. — 1

A		
	GLAZING TYPE	GL-3
	FRAME MATL.	ALUMINUM
	FRAME FIN.	F
	FRAME COLOR	SATIN ANODIZED

ACOUSTICAL WINDOW - STC 34 - ONE-WAY/ TRANSPARENT MIRROR GLAZING

B		
	GLAZING TYPE	GL-2
	FRAME MATL.	ALUMINUM
	FRAME FIN.	F
	FRAME COLOR	SATIN ANODIZED

PRE-FABRICATED SLIDING WINDOW ASSEMBLY CRL HORIZONTAL SLIDING PASS-THRU - MODEL: "DAISY"

GENERAL NOTES

SEE SPECIFICATIONS FOR GLASS TYPES.

1. PROVIDE TEMPERED "SAFETY" GLASS EVERYWHERE
2. VERIFY ALL WINDOW OPENING DIMENSIONS IN FIELD (PRIOR TO FABRICATION).
3. PROVIDE MANUAL BLINDS (HORIZONTAL, VERTICAL & ROLLED) AT ALL NEW & EXISTING EXTERIOR & INTERIOR WINDOWS AT AREA OF WORK, UNLESS OTHERWISE NOTED. REFER TO FINISH PLAN FOR EXTENT (NOT ALL WINDOWS ARE SHOWN ON THIS SHEET).
4. DARK BRONZE COLOR SHALL MATCH EXISTING CAMPUS DARK BRONZE
5. ALL GLAZING SHALL BE TEMPERED. U.N.O. AT SOUND RATED WALLS, GLAZING SHALL BE 3/8" LAMINATED GLAZING

ABBREVIATIONS

ALUM	ALUMINUM
BOM	BOTTOM OF MULLION
F	FACTORY FINISH
FF	FINISH FLOOR
TOM	TOP OF MULLION

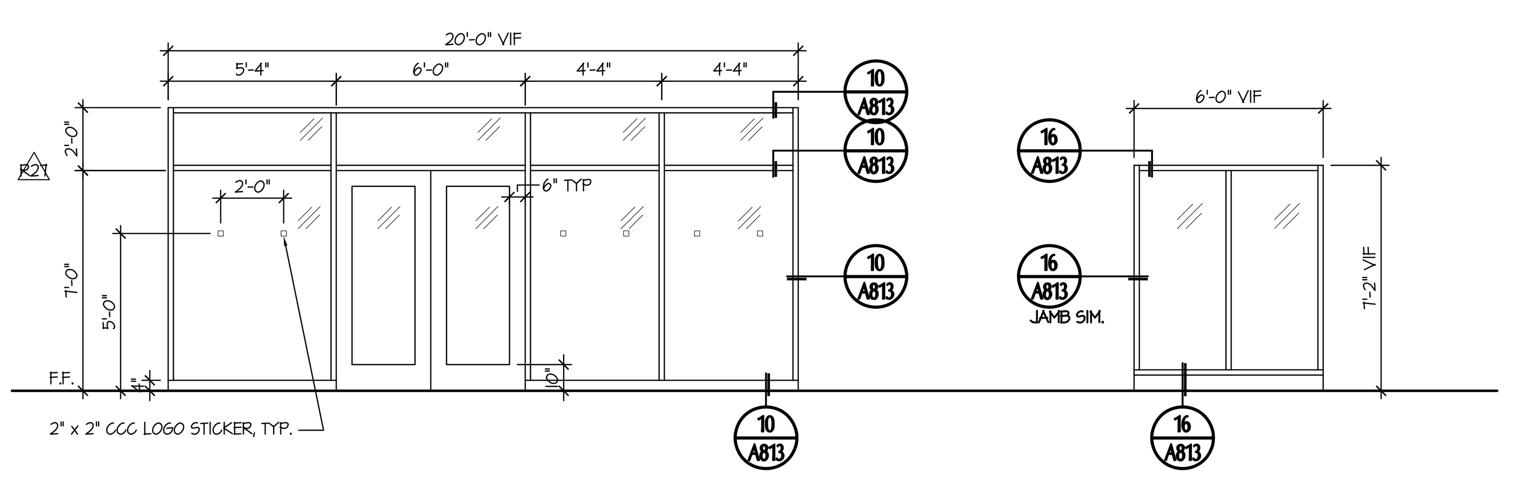

C		
	GLAZING TYPE	GL-2
	FRAME MATL.	ALUMINUM
	FRAME FIN.	F
	FRAME COLOR	DARK BRONZE

D		
	GLAZING TYPE	GL-1
	FRAME MATL.	ALUMINUM
	FRAME FIN.	F
	FRAME COLOR	DARK BRONZE

EXTERIOR WINDOW

WINDOW SCHEDULE

tBP architecture planning interiors

tBP/Architecture
1777 Oakland Boulevard, Suite 320
Walnut Creek, CA 94596
ph: 925.246.6419

architect

consultant

IDENTIFICATION STAMP
DIV. OF THE STATE ARCHITECT
OFFICE OF REGULATION SERVICES
APP. #01-116817
FILE NO. 7-C1
AC FLS SS
DATE

DIVISION OF THE STATE ARCHITECT
1515 CLAY STREET
OAKLAND, CA 94612
ph:(510) 622-3101

agency

C-4008 APPLIED ARTS & ADMIN RENOVATION

2600 MISSION BELL DRIVE, SAN PABLO, CA 94806

CONTRA COSTA COMMUNITY COLLEGE DISTRICT
500 COURT STREET MARTINEZ, CA 94553

owner

tBP project number:	20865.00
file name:	A621-DOOR & WINDOW SCHEDULE
drawn by:	checked by:
date:	APRIL 20, 2019

rev:	date:	description:
	8/17/2017	BID SET
A, R27, R28		
R44	01/26/18	RFI 44
A10	03/16/18	ASI 10
R99	06/25/18	RFI 99
	04/20/2019	RECORD SET

THIS DRAWING AND THE DESIGNS, DEPICTIONS, IDEAS AND OTHER INFORMATION CONTAINED HEREIN CONSTITUTE UNPUBLISHED WORK OF tBP/ARCHITECTURE AND SHALL REMAIN PROPERTY OF tBP/ARCHITECTURE IN PERPETUITY. NO PART THEREOF SHALL BE REPRODUCED, DISCLOSED, DISTRIBUTED, SOLD, PUBLISHED OR OTHERWISE USED IN ANY WAY WITHOUT THE ADVANCED EXPRESS WRITTEN CONSENT OF tBP/ARCHITECTURE.

drawing title:

DOOR SCHEDULE & WINDOW SCHEDULE

drawing no.:

A621

drawing of

Record Dwgs

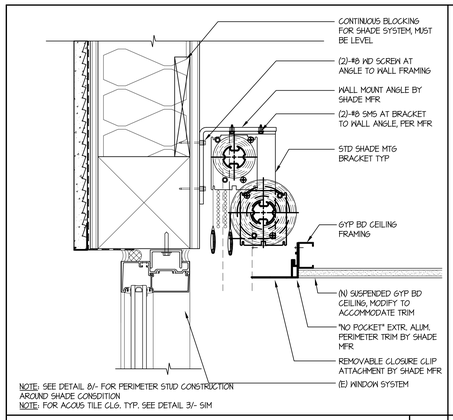

NOTE: SEE DETAIL 8/- FOR PERIMETER STUD CONSTRUCTION AROUND SHADE CONDITION
NOTE: FOR ACOUS TILE CLG. TYP. SEE DETAIL 3/- SIM

DETAIL - DOUBLE ROLLER SHADE
SCALE: 3" = 1'-0" 1

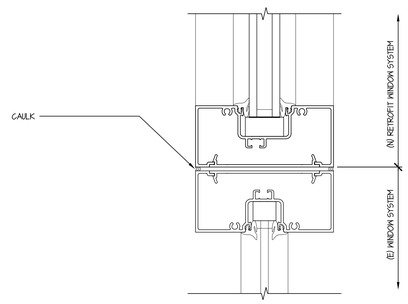

DETAIL - RETROFIT WINDOW SYSTEM
SCALE: HALF 2

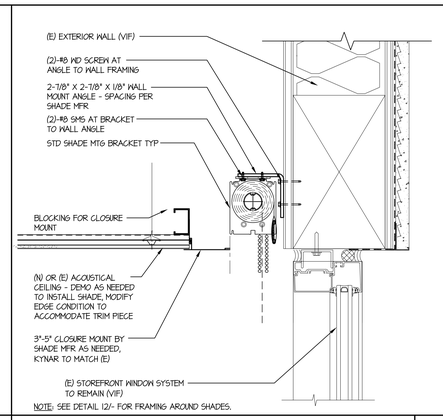

NOTE: SEE DETAIL 12/- FOR FRAMING AROUND SHADES.

DETAIL - ROLLER SHADE
SCALE: 3" = 1'-0" 3

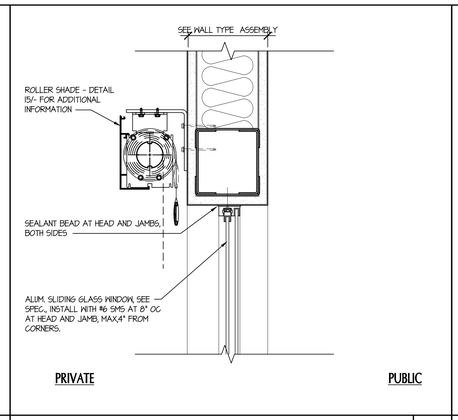

DETAIL - SLIDING WINDOW HEAD
SCALE: 3" = 1'-0" 4

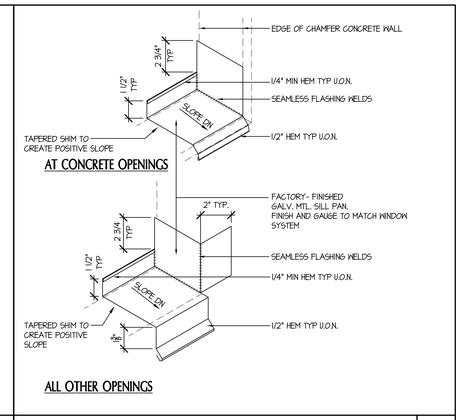

SILL FLASHING AT OPENINGS
SCALE: 3" = 1'-0" 5

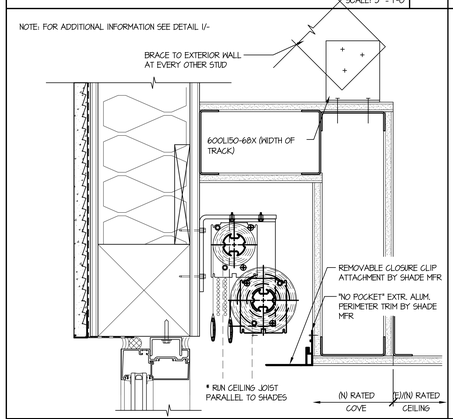

DETAIL - DOUBLE ROLLER SHADE @ RATED CEILING 6
SCALE: 3" = 1'-0"

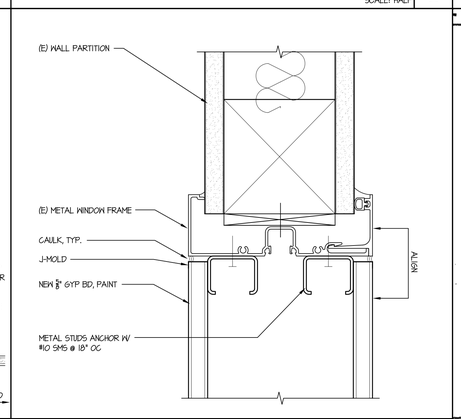

DETAIL - (E) FURRED WINDOW
SCALE: HALF 7

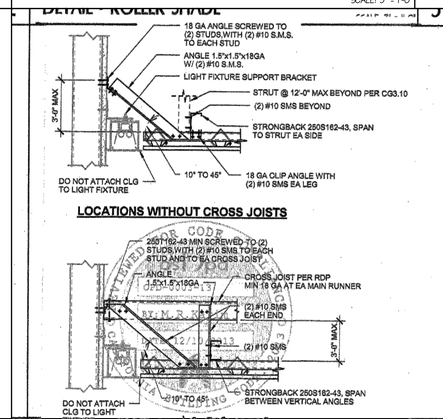

8

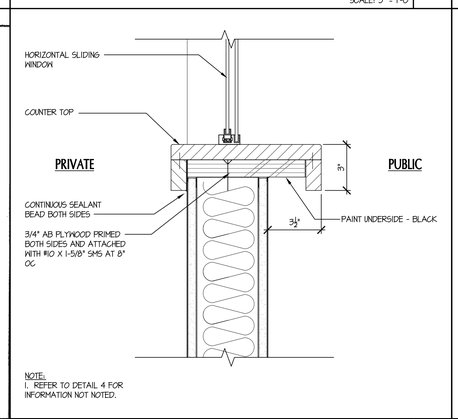

NOTE:
1. REFER TO DETAIL 4 FOR INFORMATION NOT NOTED.

DETAIL - SLIDING WINDOW SILL
SCALE: 3" = 1'-0" 9

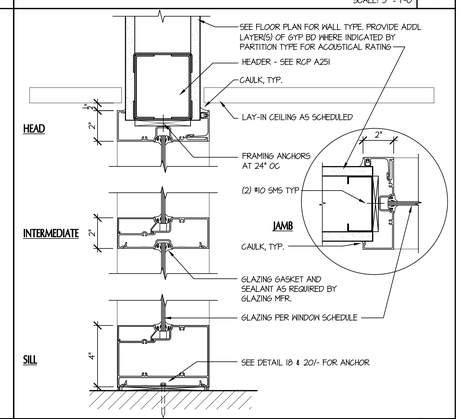

DETAIL - INTERIOR STOREFRONT WINDOW
SCALE: 3" = 1'-0" 10

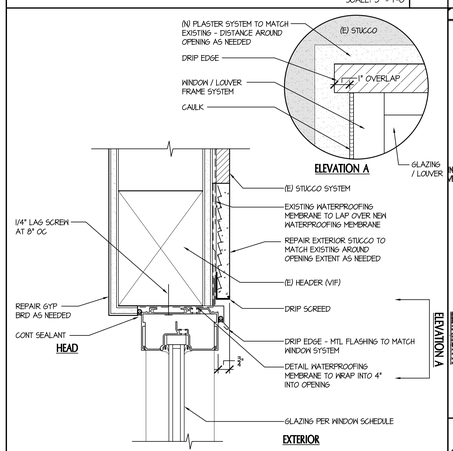

STOREFRONT SILL AT CURB
SCALE: 3" = 1'-0" 16

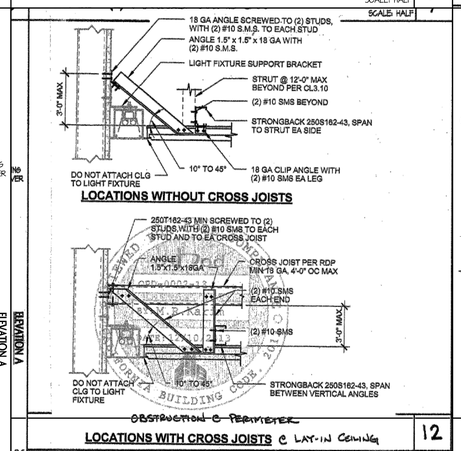

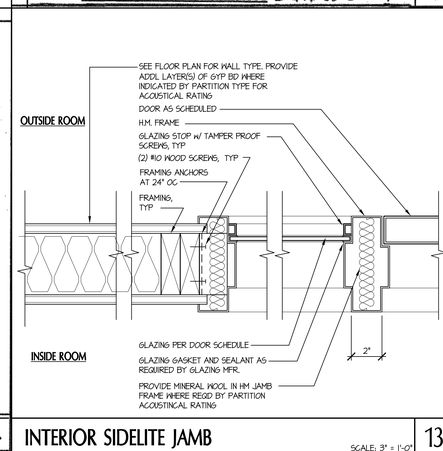

INTERIOR SIDELITE JAMB
SCALE: 3" = 1'-0" 13

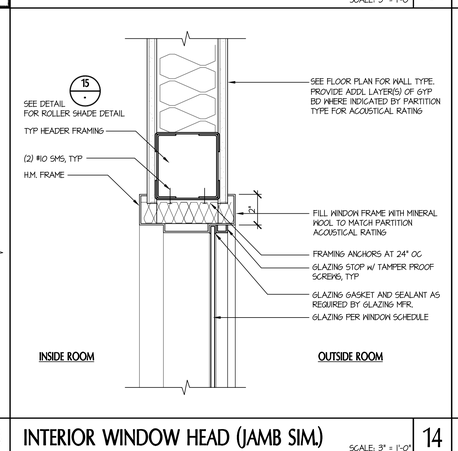

INTERIOR WINDOW HEAD (JAMB SIM.)
SCALE: 3" = 1'-0" 14

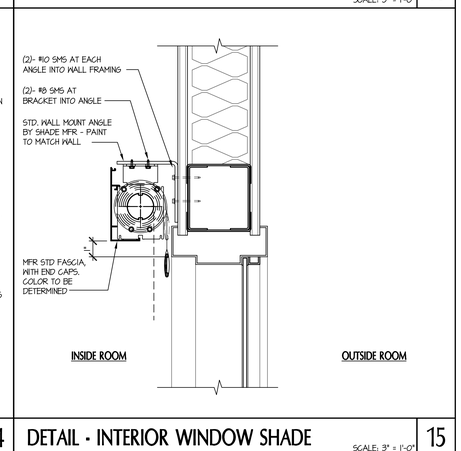

DETAIL - INTERIOR WINDOW SHADE
SCALE: 3" = 1'-0" 15

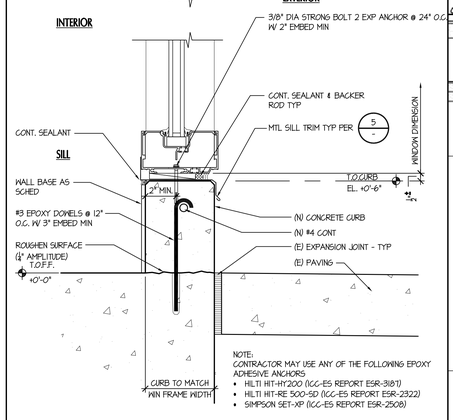

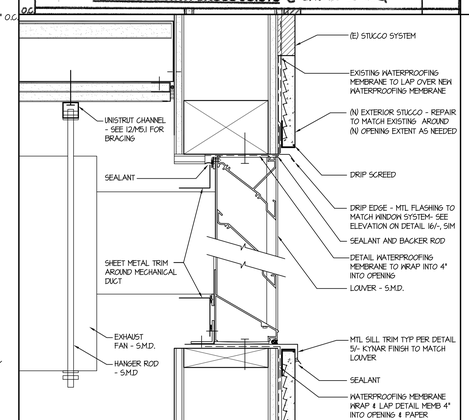

LOUVER @ EXHAUST FAN
SCALE: 3" = 1'-0" 17

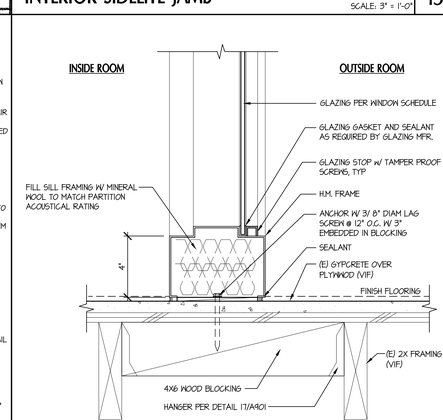

INTERIOR WINDOW SILL - 2ND FLOOR
SCALE: 3" = 1'-0" 18

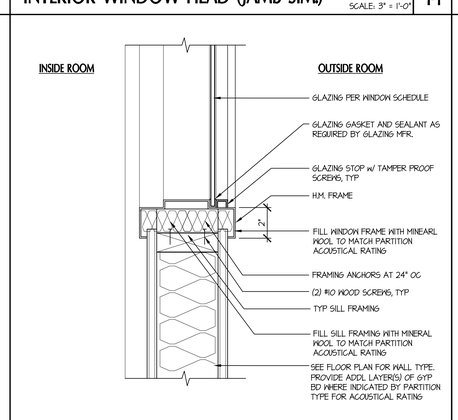

INTERIOR WINDOW SILL
SCALE: 3" = 1'-0" 19

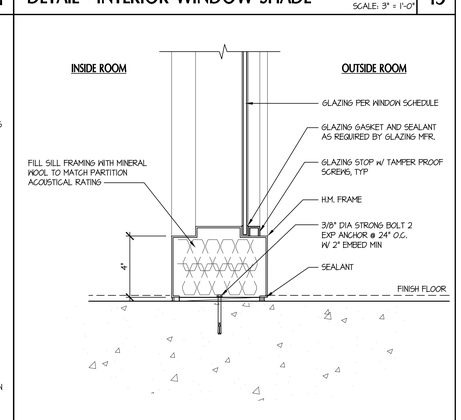

INTERIOR WINDOW SILL - GROUND FLOOR
SCALE: 3" = 1'-0" 20

tBP
architecture planning interiors
tBP/Architecture
1777 Oakland Boulevard, Suite 320
Walnut Creek, CA 94596
ph: 925.246.6419

architect

consultant

agency

IDENTIFICATION STAMP
DIV. OF THE STATE ARCHITECT
OFFICE OF REGULATION SERVICES
APPL # 01-110617
FILE NO. 7-C1
AC ___ KS ___ SS ___
DATE ___

DIVISION OF THE STATE ARCHITECT
1515 CLAY STREET
OAKLAND, CA94612
ph:(510) 622-3101

C-4008 APPLIED ARTS & ADMIN RENOVATION
2600 MISSION BELL DRIVE, SAN PABLO, CA 94806

CONTRA COSTA COMMUNITY COLLEGE DISTRICT
500 COURT STREET MARTINEZ, CA 94553

owner

tBP project number: 20865.00
file name: A813 Window Details.dwg
drawn by: XX checked by:
date: APRIL 20, 2019

rev:	date:	description:
	8/17/2017	BID SET
	04/20/2019	RECORD SET

THIS DRAWING AND THE DESIGNS, DEPICTIONS, IDEAS AND OTHER INFORMATION CONTAINED HEREIN CONSTITUTE UNPUBLISHED WORK OF tBP/ARCHITECTURE AND SHALL REMAIN PROPERTY OF tBP/ARCHITECTURE IN PERPETUITY. NO PART THEREOF SHALL BE REPRODUCED, DISCLOSED, DISTRIBUTED, SOLD, PUBLISHED OR OTHERWISE USED IN ANY WAY WITHOUT THE EXPRESS WRITTEN CONSENT OF tBP/ARCHITECTURE.

drawing title:
WINDOW DETAILS

drawing no.:
A813

000 drawing of

Record Dwgs

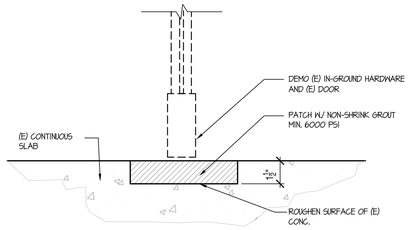

NOTE: DO NOT DAMAGE OR CUT (E) REBAR, LOCATE BY NON-DESTRUCTIVE MEANS PRIOR TO DRILLING FOR ANCHORS

PATCH DETAIL SCALE: 3" = 1'-0" 3

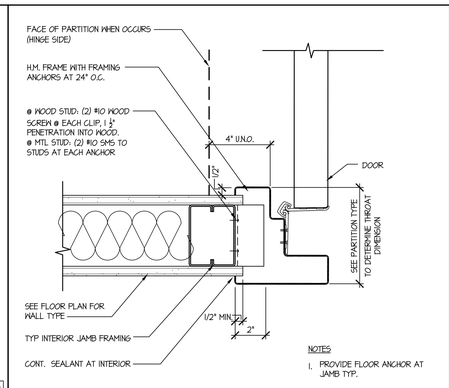

NOTES

1. PROVIDE FLOOR ANCHOR AT JAMB TYP.

DETAIL - CROSS CORRIDOR DOOR JAMB SCALE: 3" = 1'-0" 4

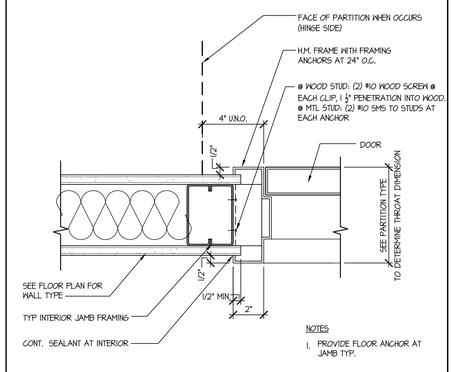

NOTES

1. PROVIDE FLOOR ANCHOR AT JAMB TYP.

DETAIL - INTERIOR DOOR JAMB SCALE: 3" = 1'-0" 9

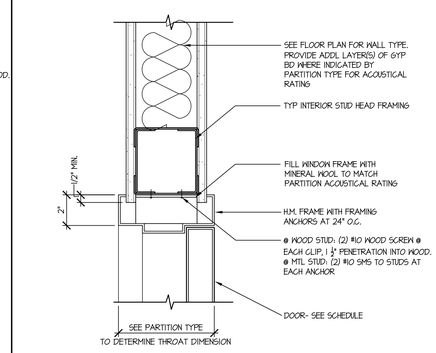

DETAIL - INTERIOR DOOR HEAD SCALE: 3" = 1'-0" 10

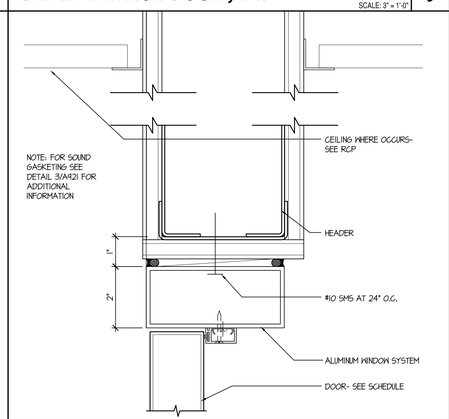

INTERIOR ALUM DOOR HEAD DETAIL SCALE: HALF 14

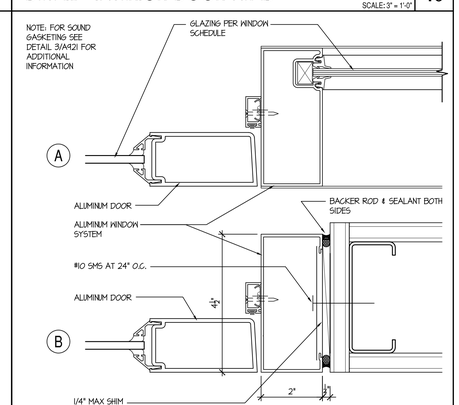

INTERIOR DOOR JAMB DETAIL (HEAD SIM) SCALE: HALF 15

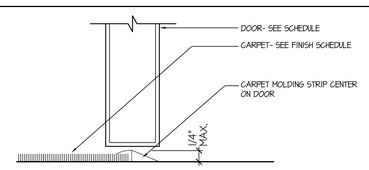

CARPET/ CONCRETE TRANSITION SCALE: HALF 18a

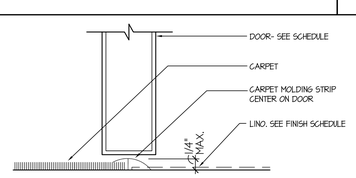

CARPET / RUBBER (LVT) TRANSITION SCALE: HALF 17b

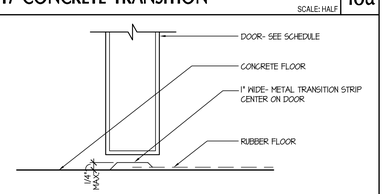

CONCRETE / RUBBER (VCT) TRANSITION SCALE: HALF 18b

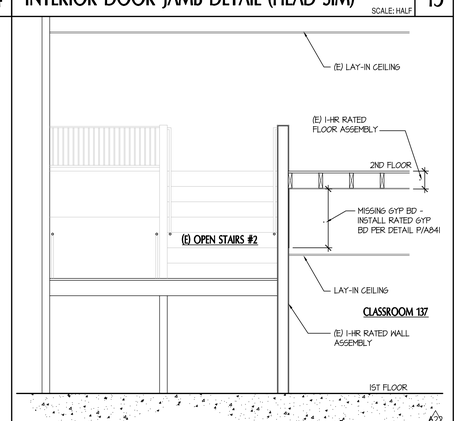

STAIR #2 SECTION SCALE: 1/4" = 1'-0" 20

tBP
architecture
planning
interiors
tBP/Architecture
1777 Oakland Boulevard, Suite 320
Walnut Creek, CA 94596
ph: 925.248.8419
architect

consultant

IDENTIFICATION STAMP
DIV. OF THE STATE ARCHITECT
OFFICE OF REGULATION SERVICES
APPL # 01-110617
FILE NO. 7-C1
AC KS SS
DATE

DIVISION OF THE STATE ARCHITECT
1515 CLAY STREET
OAKLAND, CA94612
ph:(510) 622-3101
agency

C-4008 APPLIED ARTS & ADMIN RENOVATION

2600 MISSION BELL DRIVE, SAN PABLO, CA 94806

CONTRA COSTA COMMUNITY COLLEGE DISTRICT
500 COURT STREET MARTINEZ, CA 94553

owner

tBP project number: 20865.00
file name: A822.dwg
drawn by: DM checked by:
date: APRIL 20, 2019

rev:	date:	description:
	8/17/2017	BID SET
A02	6/22/18	ASI 22
	04/20/2019	RECORD SET

THIS DRAWING AND THE DESIGNS, DIMENSIONS, IDEAS AND OTHER INFORMATION CONTAINED HEREIN CONSTITUTE UNPUBLISHED WORK OF tBP/ARCHITECTURE AND SHALL REMAIN PROPERTY OF tBP/ARCHITECTURE IN PERPETUITY. NO PART THEREOF SHALL BE REPRODUCED, DISCLOSED, DISTRIBUTED, SOLD, PUBLISHED OR OTHERWISE USED IN ANY WAY WITHOUT THE ADVANCED EXPRESS WRITTEN CONSENT OF tBP/ARCHITECTURE.

drawing title:
DOOR DETAILS

drawing no.:
A822

124 drawing of

Record Dwgs

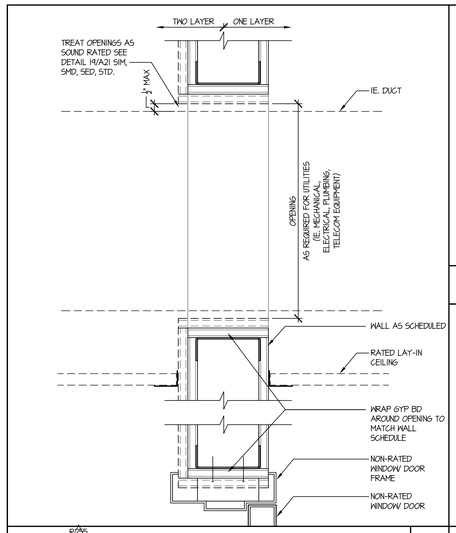

1-HR FIRE CONSTRUCTION PARTITION 1

SCALE: 1" = 1'-0"

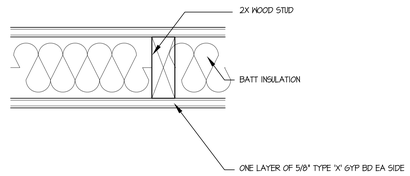

1-HR FIRE RESISTIVE PARTITION P

SCALE: 3" = 1'-0"

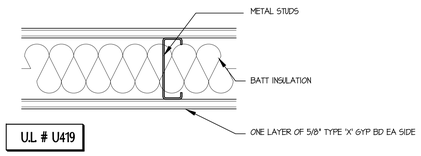

1-HR FIRE RESISTIVE PARTITION Q

SCALE: 3" = 1'-0"

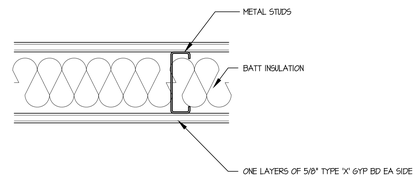

NOTE: SEE DETAIL 19/- FOR HEAD CONDITION

SOUND-RATED PARTITION - RETROFIT G

SCALE: 3" = 1'-0"

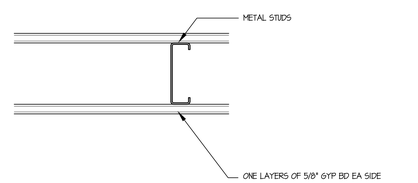

NON-RATED PARTITION H

SCALE: 3" = 1'-0"

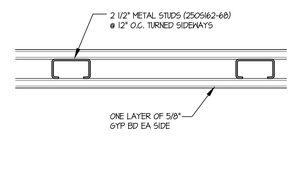

NON-RATED PARTITION J

SCALE: 3" = 1'-0"

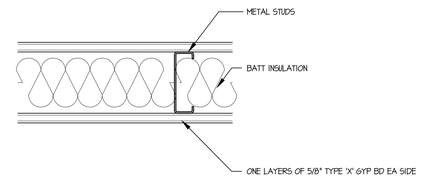

SOUND-RATED PARTITION A

SCALE: 3" = 1'-0"

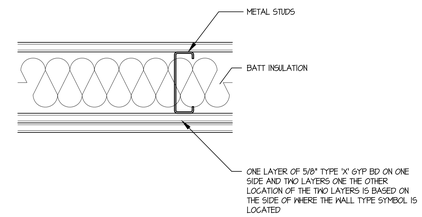

SOUND-RATED PARTITION B

SCALE: 3" = 1'-0"

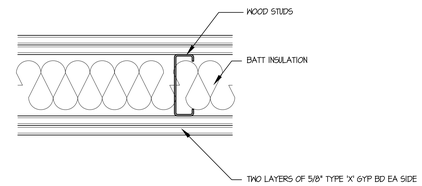

SOUND-RATED PARTITION C

SCALE: 3" = 1'-0"

PARTITION SCHEDULE NOTES

1. PARTITION TYPE INDICATIONS ARE INDEPENDENT OF APPLIED FINISHES - IF ANY - TO BE ADDED. SEE THE "FINISH SCHEDULE" AND THE DESIGNATIONS ON THE PLANS FOR ADDITIONAL INFORMATION REGARDING APPLIED FINISHES
2. WHERE PARTITION TYPE DESIGNATION FLOOR PLANS IS INTERRUPTED BY DOOR OPENING, GLAZED PARTITION, ETC., CONSTRUCTION ABOVE INTERRUPTION (AND WHERE APPLICABLE BELOW) IS TO BE THE SAME AS THAT DESIGNATED FOR THE PARTITION IN WHICH THE INTERRUPTION OCCURRED
3. THE FACE LAYER OF ALL FIRE-RATED GYP BD PARTITIONS SHALL HAVE - AT MINIMUM - JOINTS TAPED AND FASTENER HEADS TREATED (GYP BD FINISH LEVEL 1 AS DEFINED BY THE SPECIFICATIONS AND GA-214-10, "LEVELS OF GYPSUM BD FINISH")
4. PROVIDE ACOUSTICAL SEALANT AT ALL SOUND RATED PARTITIONS. SEE FLOOR PLANS FOR LOCATIONS OF SOUND RATED PARTITIONS. SEE SHEET **A921** FOR PENETRATION CONDITIONS THROUGH ACOUSTICAL/ SOUND-RATED WALLS.
5. FOR METAL STUD SIZES FOR EACH PARTITION TYPE SEE DETAIL **10/ A841**
6. ALL INTERIOR WOOD/ METAL STUD FRAMING SHALL RUN TO THE UNDERSIDE OF DECK/ ROOF.
7. INSTALL ONE LAYER OF 5/8", WATER-RESISTANCE GYPSUM BOARD IN LIEU OF FACE LAYER OF GYPSUM BOARD (WHERE GYP BD OCCURS) OF BASIC PARTITION AT THE FOLLOWING LOCATIONS, (EXCEPTION AT RATED WALLS), SEE ALSO DETAIL **15/ -** FOR TILE INSTALLATION AT WALL
   - AT RESTROOMS

ACOUSTICAL PARTITION NOTES:

- FULLY SEAL ALL PARTITION HEAD, BASE AND JUNCTION INTERFACES WITH NON-HARDENING, RESILIENT ACOUSTICAL CAULK
- MINIMIZE THE NUMBER OF PENETRATIONS IN ACOUSTICAL PARTITIONS. PROVIDE A ¼" PERIMETER AROUND ASSEMBLY PENETRATIONS, THEN SEAL AIRTIGHT WITH ACOUSTICAL CAULK AND, IF NECESSARY, FOAM BACKER ROD
- WHERE BACK-TO-BACK PENETRATIONS CANNOT BE AVOIDED, IT IS HIGHLY RECOMMENDED THAT THEY BE BOXED-IN WITH A MINIMUM OF ONE LAYER OF ⅝" THICK GYPSUM BOARD AND ALL SEAMS OR OPENING BE SEALED AIRTIGHT WITH NON-HARDENING, RESILIENT ACOUSTICAL CAULK. STAGGER THEN MUD AND TAPE SEAMS IN MULTI-LAYER CONSTRUCTIONS
- STAGGER THEN MUD AND TAPE SEAMS IN MULTI-LAYER CONSTRUCTIONS
- AFTER CABLES ARE INSTALLED AND PULLED, CABLE TRAY PENETRATIONS SHOULD BE TIGHTLY PACKED WITH DENSE FIRE BLOCKS OR PUTTY
- MULLIONS SHOULD BE INSTALLED TO FORM AN AIRTIGHT SEAL AT ALL JUNCTIONS AND FRAMES SHOULD BE GROUTED OR FILLED WITH HIGH DENSITY FIBERGLASS. IDEALLY A MINIMUM OF ONE LAYER OF ⅝" GYPSUM BOAR SHOULD EXTEND TO FACADE.

NOTE:
FOR SOUND RATED HEAD AND SILL DETAILS - SEE SHEET **12 /A902 AND SHEET A921**

FOR NON-RATED HEAD AND SILL DETAILS - SEE SHEETS **12 /A902**

FOR FIRE-RATED HEAD AND SILL DETAILS - SEE DETAIL **11/- AND 12/A902**

PARTITION TYPE SYMBOL 10

SCALE: 1/4" = 1'-0"

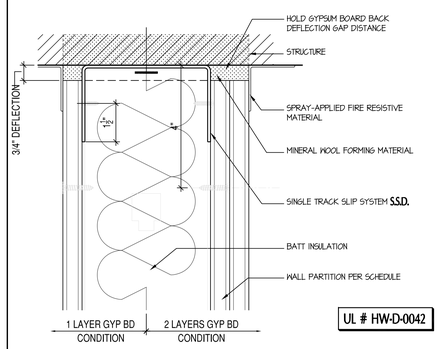

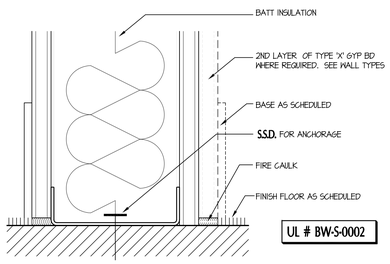

1HR FIRE-RATED DETAIL 11

SCALE: HALF

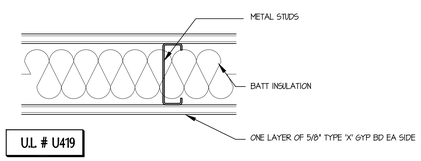

NOTE: THE PURPOSE OF THIS WALL TYPE IS TO MAINTAIN THE 1-HR ROOF/CEILING ASSEMBLY AND REDUCE SOUND TRANSMISSION FOR OPENINGS AT THESE WALL TYPE, SEE DETAIL 1/-

1-HR FIRE/ SOUND CONSTRUCTION PARTITION X

SCALE: 3" = 1'-0"

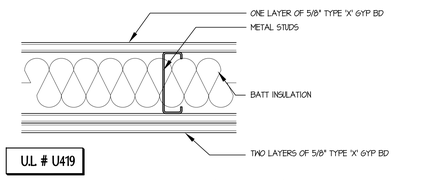

NOTE: THE PURPOSE OF THIS WALL TYPE IS TO MAINTAIN THE 1-HR ROOF/CEILING ASSEMBLY AND REDUCE SOUND TRANSMISSION FOR OPENINGS AT THESE WALL TYPE, SEE DETAIL 1/-

1-HR FIRE/ SOUND CONSTRUCTION PARTITION Y

SCALE: 3" = 1'-0"

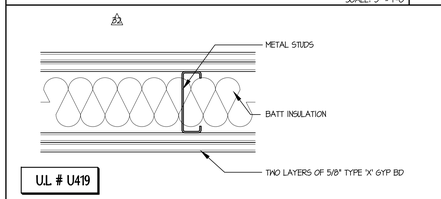

NOTE: THE PURPOSE OF THIS WALL TYPE IS TO MAINTAIN THE 1-HR ROOF/CEILING ASSEMBLY AND REDUCE SOUND TRANSMISSION FOR OPENINGS AT THESE WALL TYPE, SEE DETAIL 1/-

1-HR FIRE/ SOUND CONSTRUCTION PARTITION Z

SCALE: 3" = 1'-0"

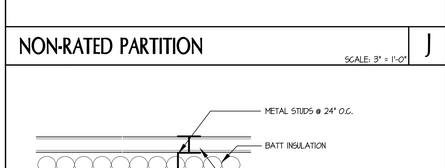

NON-RATED PARTITION M

SCALE: 3" = 1'-0"

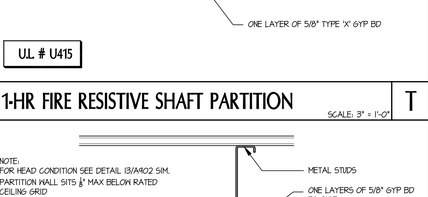

1-HR FIRE RESISTIVE SHAFT PARTITION T

SCALE: 3" = 1'-0"

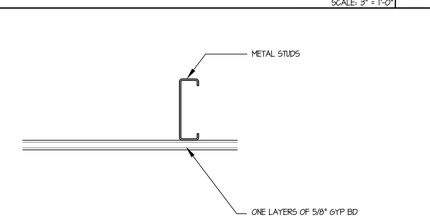

NOTE: PARTIAL HEIGHT OF 8'-0"

NON-RATED PARTIAL HEIGHT FURRED PARTITION K

SCALE: 3" = 1'-0"

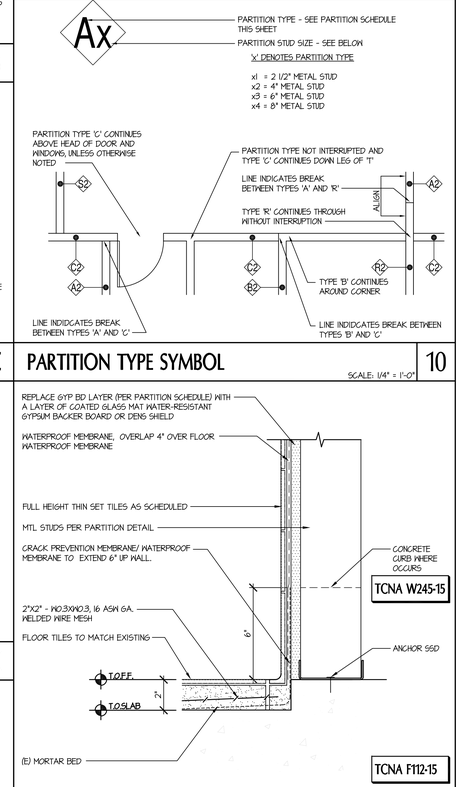

TILE WALL BASE DETAIL 15

SCALE:3" = 1'-0"

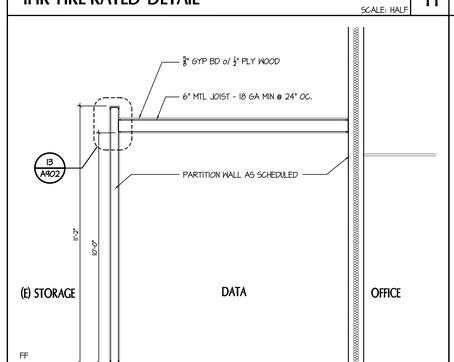

WALL SECTION 16

SCALE: 3/8" = 1'-0"

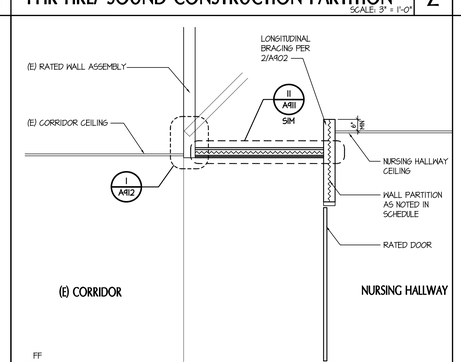

RATED VESTIBULE SECTION 17

SCALE: 3/8" = 1'-0"

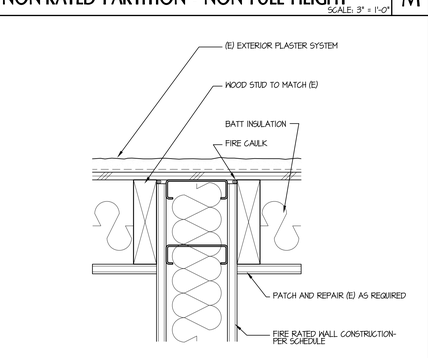

AT EXTERIOR WALL

FIRE RATED ASSEMBLY TERMINATION 18

SCALE:3" = 1'-0"

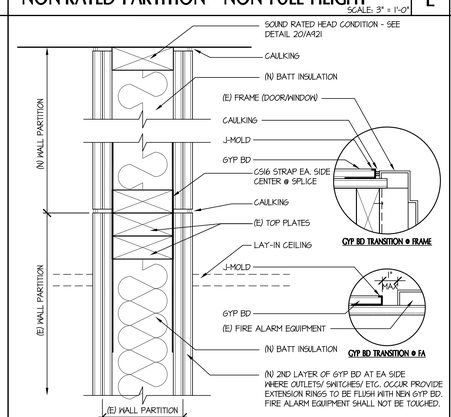

SOUND-RATED PARTITION RETROFIT 19

SCALE: 3" = 1'-0"

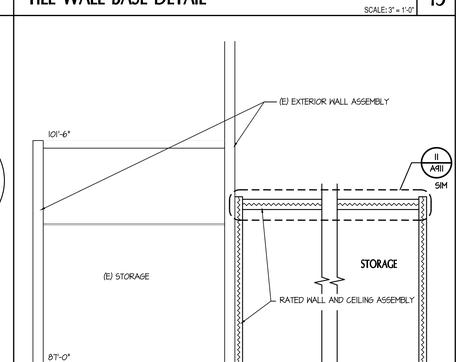

RATED ENCLOSURE SECTION 20

SCALE: 1/4" = 1'-0"

tBP
architecture
planning
interiors

tBP/Architecture
1777 Oakland Boulevard, Suite 320
Walnut Creek, CA 94596
ph: 925.256.8419

architect

consultant

IDENTIFICATION STAMP
DIV. OF THE STATE ARCHITECT
OFFICE OF REGULATION SERVICES
APPL # 01-110617
FILE NO. 7-C1
AC KS SS
DATE

DIVISION OF THE STATE ARCHITECT
1515 CLAY STREET
OAKLAND, CA94612
ph:(510) 622-3101

agency

C-4008 APPLIED ARTS & ADMIN RENOVATION
2600 MISSION BELL DRIVE, SAN PABLO, CA 94806

CONTRA COSTA COMMUNITY COLLEGE DISTRICT
500 COURT STREET MARTINEZ, CA 94553

owner

tBP project number: 20865.00
file name: A841.DWG
drawn by: DM checked by:
date: APRIL 20, 2019

rev:	date:	description:
	8/17/2017	BID SET
	04/20/2019	RECORD SET

THIS DRAWING AND THE DESIGNS, DEPICTIONS, IDEAS AND OTHER INFORMATION CONTAINED HEREIN CONSTITUTE UNPUBLISHED WORK OF tBP/ARCHITECTURE AND SHALL REMAIN PROPERTY OF tBP/ARCHITECTURE IN PERPETUITY. NO PART THEREOF SHALL BE REPRODUCED, DISCLOSED, DISTRIBUTED, SOLD, PUBLISHED OR OTHERWISE USED IN ANY WAY WITHOUT THE ADVANCED EXPRESS WRITTEN CONSENT OF tBP/ARCHITECTURE.

drawing title:
INTERIOR WALL & PARTITION TYPES

drawing no.:
A841

128 drawing of

Record Dwgs

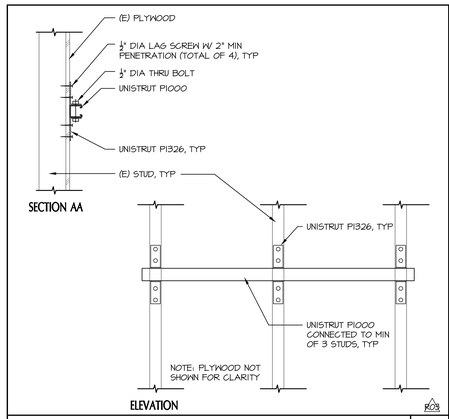

BACKING PLATE OVER (E) PLYWOOD — SCALE: 1 1/2" = 1'-0" — 1

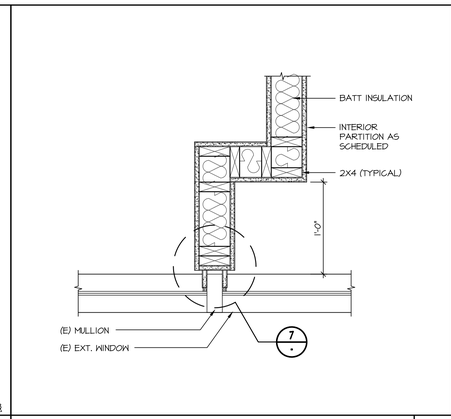

WINDOW TRANSITION DETAIL — SCALE: 1 1/2" = 1'-0" — 2

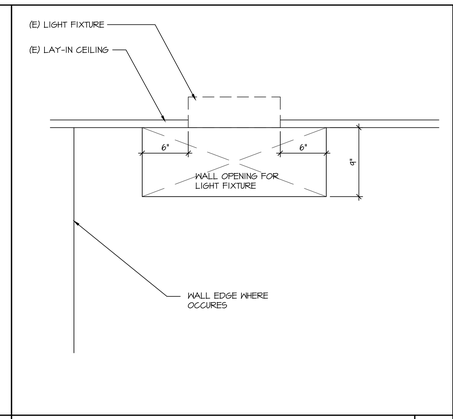

WALL OPENING AT (E) LIGHT FIXTURE — SCALE: 1 1/2" = 1'-0" — 3

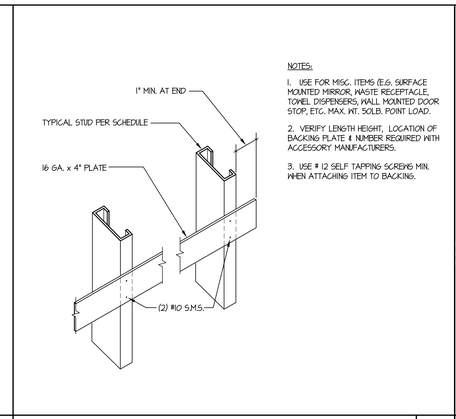

NOTES:

1. USE FOR MISC. ITEMS (E.G. SURFACE MOUNTED MIRROR, WASTE RECEPTACLE, TOWEL DISPENSERS, WALL MOUNTED DOOR STOP, ETC. MAX. WT. 50LB. POINT LOAD.
2. VERIFY LENGTH HEIGHT, LOCATION OF BACKING PLATE & NUMBER REQUIRED WITH ACCESSORY MANUFACTURERS.
3. USE # 12 SELF TAPPING SCREWS MIN. WHEN ATTACHING ITEM TO BACKING.

BACKING PLATE - TYPE 'A' — SCALE: 3/4" = 1'-0" — 4

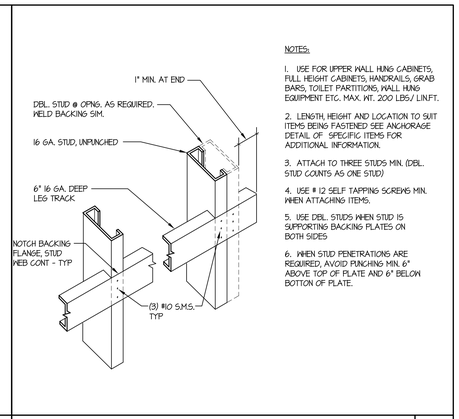

NOTES:

1. USE FOR UPPER WALL HUNG CABINETS, FULL HEIGHT CABINETS, HANDRAILS, GRAB BARS, TOILET PARTITIONS, WALL HUNG EQUIPMENT ETC. MAX. WT. 200 LBS/ LIN.FT.
2. LENGTH, HEIGHT AND LOCATION TO SUIT ITEMS BEING FASTENED SEE ANCHORAGE DETAIL OF SPECIFIC ITEMS FOR ADDITIONAL INFORMATION.
3. ATTACH TO THREE STUDS MIN. (DBL. STUD COUNTS AS ONE STUD)
4. USE # 12 SELF TAPPING SCREWS MIN. WHEN ATTACHING ITEMS.
5. USE DBL. STUDS WHEN STUD IS SUPPORTING BACKING PLATES ON BOTH SIDES
6. WHEN STUD PENETRATIONS ARE REQUIRED, AVOID PUNCHING MIN. 6" ABOVE TOP OF PLATE AND 6" BELOW BOTTON OF PLATE.

BACKING PLATE - TYPE 'B' — SCALE: 3/4" = 1'-0" — 5

PLYWOOD SHEATHING	PW NAILING LOCATION (SEE PLANS & STRUCTURAL SECTIONS)	PW AT LOCATIONS AS INDICATED ON STRUC. PLANS	PW AT OTHER PARTITIONS AS NOT ABOVE SHOWN ON STRUCTS PLANS
1 1/8" THICKNESS @ ROOF	AT ALL EDGES OF SHEET AND AT ALL STUDS PLY AS "EDGE NAILING" LOCATION	10d @ 4" o.c. Edge	8d @ 5" o.c.
5/8" THICKNESS @ FLOORS			
1/2" THICKNESS @ WALLS	AT ALL OTHER CONTACTS UNLESS OTHERWISE NOTED	10d @ 12" o.c.	8d @ 12" o.c.
NOTES: SEE PLANS AND SECTIONS FOR SPECIAL NAILING. [illegible]	AT DOUGLAS FIR SILLS	10d @ 4" o.c. Edge	8d @ 5" o.c.
[illegible]	AT REDWOOD SILLS	10d @ 3" o.c. Edge	8d @ 6" o.c.

SCHEDULE - PLAYWD SHEATING — SCALE: 1" = 1'-0" — 6

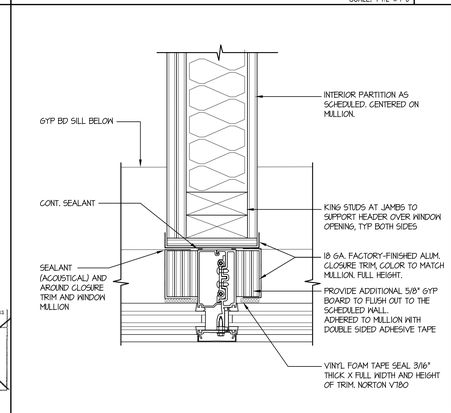

WALL TERMINATION AT WINDOW MULLION — SCALE: 3" = 1'-0" — 7

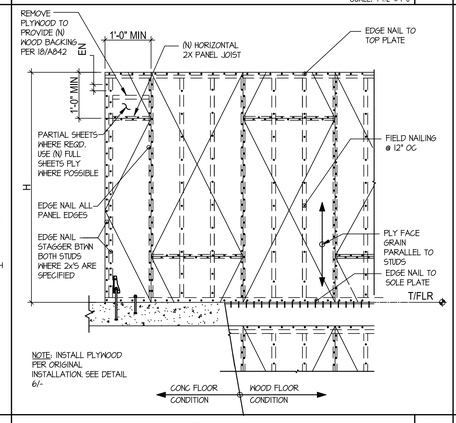

SHEAR WALL ELEVATIONI — SCALE: 3/8" = 1'-0" — 8

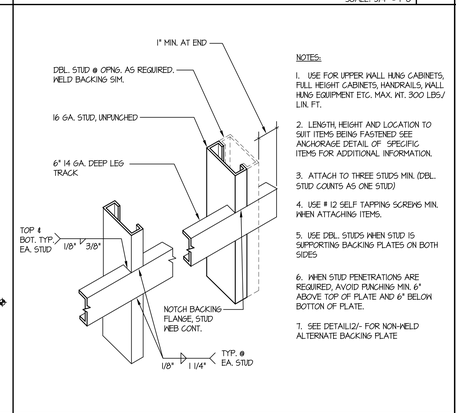

NOTES:

1. USE FOR UPPER WALL HUNG CABINETS, FULL HEIGHT CABINETS, HANDRAILS, WALL HUNG EQUIPMENT ETC. MAX. WT. 300 LBS/ LIN. FT.
2. LENGTH, HEIGHT AND LOCATION TO SUIT ITEMS BEING FASTENED SEE ANCHORAGE DETAIL OF SPECIFIC ITEMS FOR ADDITIONAL INFORMATION.
3. ATTACH TO THREE STUDS MIN. (DBL. STUD COUNTS AS ONE STUD)
4. USE # 12 SELF TAPPING SCREWS MIN. WHEN ATTACHING ITEMS.
5. USE DBL. STUDS WHEN STUD IS SUPPORTING BACKING PLATES ON BOTH SIDES
6. WHEN STUD PENETRATIONS ARE REQUIRED, AVOID PUNCHING MIN. 6" ABOVE TOP OF PLATE AND 6" BELOW BOTTON OF PLATE.
7. SEE DETAIL12/- FOR NON-WELD ALTERNATE BACKING PLATE

BACKING PLATE - TYPE 'C' — SCALE: 3/4" = 1'-0" — 9

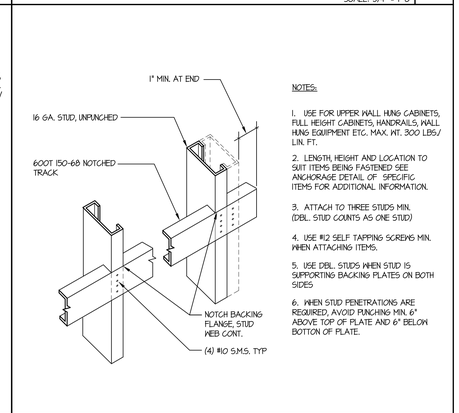

NOTES:

1. USE FOR UPPER WALL HUNG CABINETS, FULL HEIGHT CABINETS, HANDRAILS, WALL HUNG EQUIPMENT ETC. MAX. WT. 300 LBS/ LIN. FT.
2. LENGTH, HEIGHT AND LOCATION TO SUIT ITEMS BEING FASTENED SEE ANCHORAGE DETAIL OF SPECIFIC ITEMS FOR ADDITIONAL INFORMATION.
3. ATTACH TO THREE STUDS MIN. (DBL. STUD COUNTS AS ONE STUD)
4. USE #12 SELF TAPPING SCREWS MIN. WHEN ATTACHING ITEMS.
5. USE DBL. STUDS WHEN STUD IS SUPPORTING BACKING PLATES ON BOTH SIDES
6. WHEN STUD PENETRATIONS ARE REQUIRED, AVOID PUNCHING MIN. 6" ABOVE TOP OF PLATE AND 6" BELOW BOTTON OF PLATE.

BACKING PLATE - TYPE 'D' - ALTERNATE — SCALE: 3/4" = 1'-0" — 10

NOTES:

1. SEE DET. 4/A842 FOR BACKING
2. SMS SHALL HAVE MIN. 1-1/2" PENETRATION INTO BACKING TYP

DIMENSION NOTE *:
CONTRACTOR TO COORDINATE AND VERIFY ALL DIMENSIONS WITH DISTRICT ON THE SIZE OF THE HEADWALL/ BED BEFORE INSTALLING BACKING.

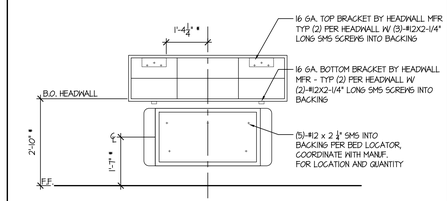

ADD ALT- HEADWALL/BED LOCATOR MOUNTING — SCALE: 1/2" = 1'-0" — 11

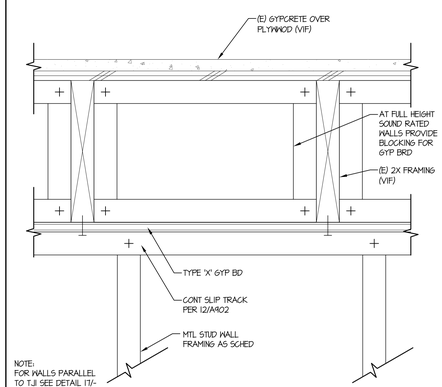

WALL FRAMING PERP TO 2ND FLOOR STRUCTURE — SCALE: 3" = 1'-0" — 12

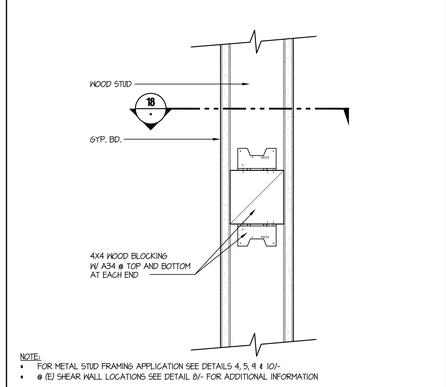

BACKING - VERTICAL SECTION @ WOOD WALLS — SCALE: NTS — 13

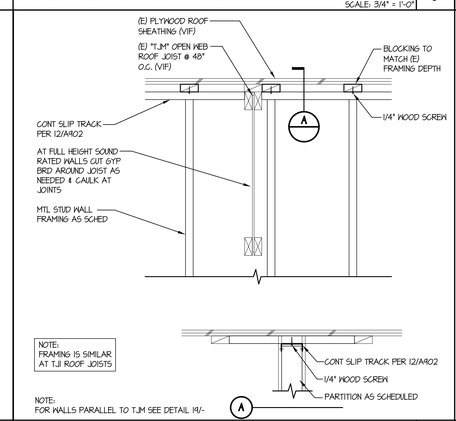

WALL FRAMING @ TJM ROOF STRUCTURE — SCALE: 1" = 1'-0" — 14

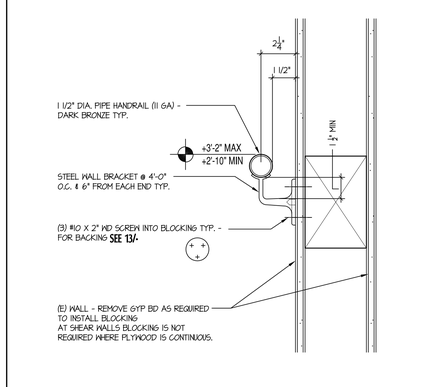

WALL MOUNTED HANDRAIL (INT.) — SCALE: 3" = 1'-0" — 15

DIMENSION NOTE *:
CONTRACTOR TO COORDINATE AND VERIFY ALL DIMENSIONS WITH DISTRICT ON THE SIZE OF THE HEADWALL/ BED BEFORE INSTALLING BACKING.

NOTE: CONTRACTOR TO RELOCATE (8) HEADWALLS FROM THE HS BLDG. THIS WORK WILL BE DONE AT THE END OF SUMMER SESSION DUE TO CLASS. CONTRACTOR WILL NEED TO MAKE A FIELD MEASUREMENT TO LOCATE THE BACKING FOR THE HEADWALLS 1

NOTES:

1. SEE DET. 4/A842 FOR BACKING
2. WOOD SCREWS SHALL HAVE MIN. 1-1/2" PENETRATION INTO BACKING TYP
3. FOR ADD ALT SEE DETAIL 11/-

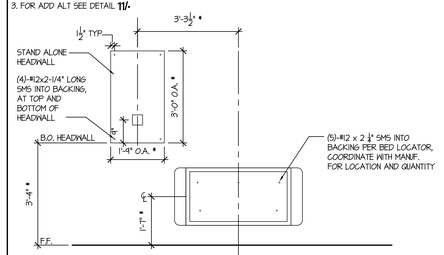

DETAIL - HEADWALL/BED LOCATOR MOUNTING — SCALE: 1/2" = 1'-0" — 16

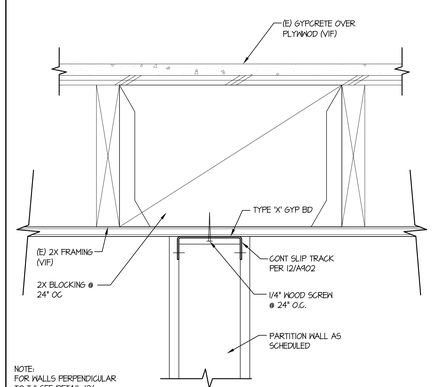

WALL FRAMING PARALLEL TO 2ND FLOOR STRUCT — SCALE: 3" = 1'-0" — 17

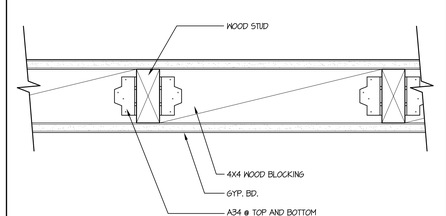

BACKING - PLAN SECTION @ WOOD WALLS — SCALE: NTS — 18

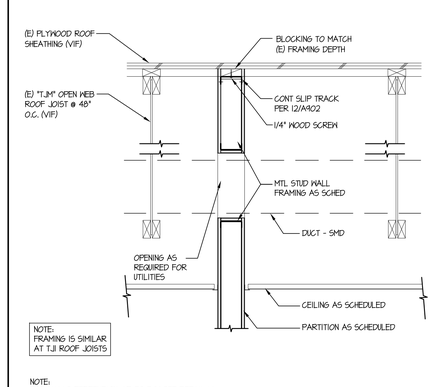

WALL FRAMING @ TJM ROOF STRUCTURE — SCALE: 1" = 1'-0" — 19

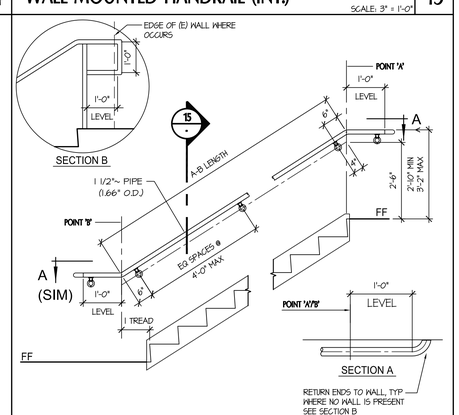

WALL RAIL — SCALE: 1/2" = 1'-0" — 20

tBP architecture planning interiors

tBP/Architecture
1777 Oakland Boulevard, Suite 320
Walnut Creek, CA 94596
ph: 925.246.6419

architect

consultant

IDENTIFICATION STAMP
DIV. OF THE STATE ARCHITECT
OFFICE OF REGULATION SERVICES
APPL # 01-116617
FILE NO. 7-C1
AC FCS SS
DATE

DIVISION OF THE STATE ARCHITECT
1515 CLAY STREET
OAKLAND, CA94612
ph:(510) 622-3101

agency

C-4008 APPLIED ARTS & ADMIN RENOVATION

2600 MISSION BELL DRIVE, SAN PABLO, CA 94806

CONTRA COSTA COMMUNITY COLLEGE DISTRICT
500 COURT STREET MARTINEZ, CA 94553

owner

tBP project number:	20865.00
file name:	A842 TYP FRAMING.dwg
drawn by:	checked by:
date:	APRIL 20, 2019

rev:	date:	description:
	8/17/2017	BID SET
1	04/21/17	ADDENDUM A NI
RCS	12/04/17	RFI 03
	04/20/2019	RECORD SET

THIS DRAWING AND THE DESIGNS, DEFINITIONS, IDEAS AND OTHER INFORMATION CONTAINED HEREIN CONSTITUTE UNPUBLISHED WORK OF tBP/ARCHITECTURE AND SHALL REMAIN PROPERTY OF tBP/ARCHITECTURE IN PERPETUITY. NO PART THEREOF SHALL BE REPRODUCED, INTRODUCED, DISTRIBUTED, SOLD, PUBLISHED OR OTHERWISE USED IN ANY WAY WITHOUT THE ADVANCED EXPRESS WRITTEN CONSENT OF tBP/ARCHITECTURE.

drawing title:
TYP FRAMING & MISC DETAILS

drawing no.:
A842

drawing of

Record Dwgs

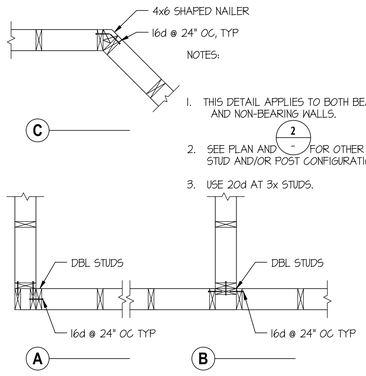

WALL INTERSECTIONS

NOT TO SCALE | 1

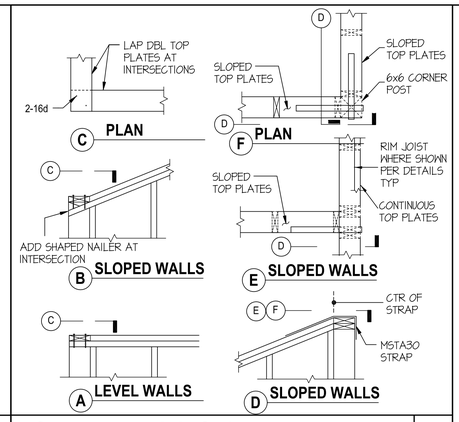

TOP PLATE INTERSECTIONS

NOT TO SCALE | 2

1. DOORS SHALL BE 1-3/4" THICK, UNLESS NOTED OTHERWISE.

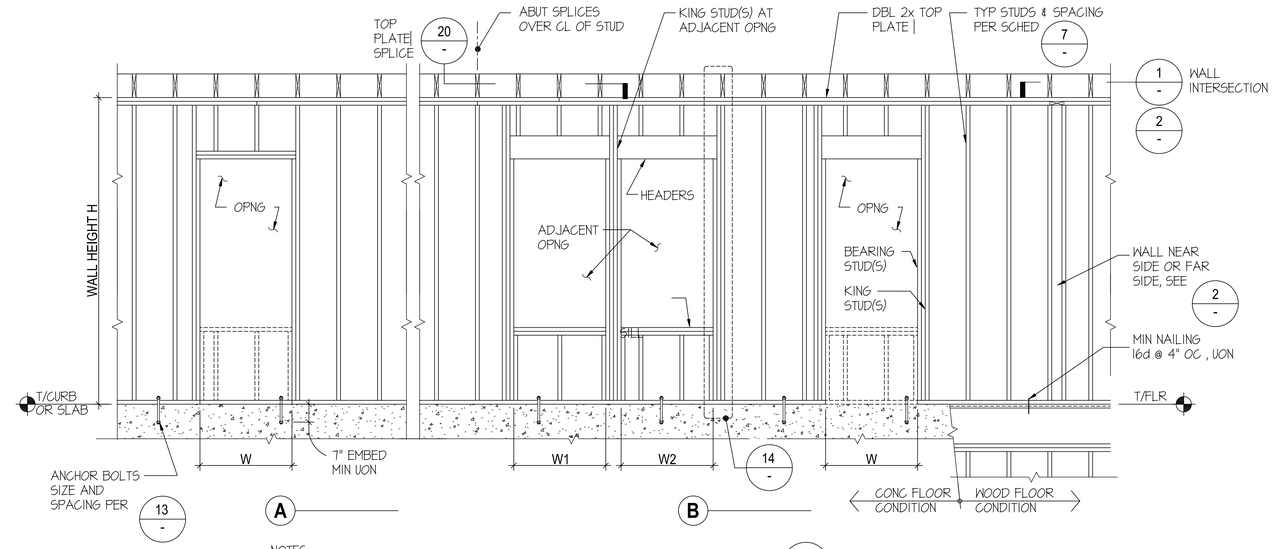

NOTES:
1. FOR HEADERS, SILLS, KING STUDS AND BEARING STUDS, SEE SCHEDULE PER DETAIL 15

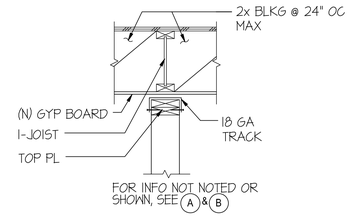

D PARTITION PARALLEL TO I-JOIST DIRECTLY UNDER I-JOIST CONNECTION

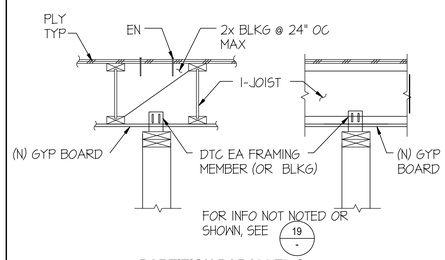

C PARTITION PARALLEL & PERPENDICULAR TO I-JOISTS

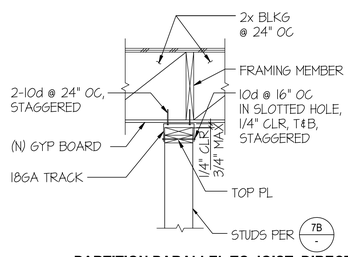

B PARTITION PARALLEL TO JOIST, DIRECTLY UNDER JOIST TOP CONNECTION

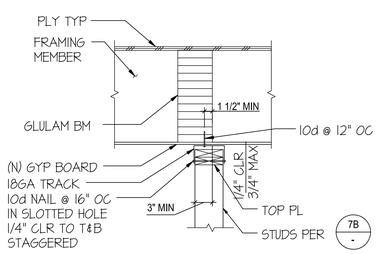

A PARTITION PARALLEL TO GLULAM BEAM TOP CONNECTION

NOTE:
- FOR ACOUSTICAL HEAD CONDITION SEE DETAIL 20/A921 FOR ADDITIONAL INFORMATION
- REMOVE EXISTING GYP BOARD TO INSTALL BLOCKING AND REINSTALL GYP BOARD

NON-BEARING WALL TOP CONNECTION

NOT TO SCALE | 16

NON-BEARING PARTITION

SECOND FLOOR		
WALL HEIGHT	STUD SIZE	SPACING
H ≤ 15'-0"	2x6	16"
15'-0" < H ≤ 24'-0"	2x6	8"
FIRST FLOOR		
WALL HEIGHT	STUD SIZE	SPACING
H ≤ 15'-0"	2x6	16"
15'-0" < H ≤ 24'-0"	2x6	8"

B

NOTE:
STRUCTURAL WALLS ARE DEFINED AS EXTERIOR, BEARING, AND/OR SHEAR WALLS. ALL OTHER WALLS ARE NON-BEARING PARTITION WALLS.

WALL STUD SCHEDULE

NOT TO SCALE | 7

TYPICAL WALL FRAMING

SCALE: 1/2" = 1'-0" | 10

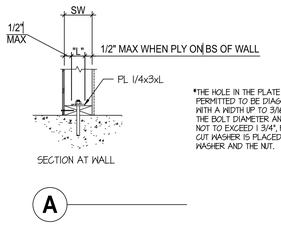

*THE HOLE IN THE PLATE WASHER IS PERMITTED TO BE DIAGONALLY SLOTTED WITH A WIDTH UP TO 3/16" LARGER THAN THE BOLT DIAMETER AND A SLOT LENGTH NOT TO EXCEED 1 3/4", PROVIDED A STANDARD CUT WASHER IS PLACED BETWEEN THE PLATE WASHER AND THE NUT.

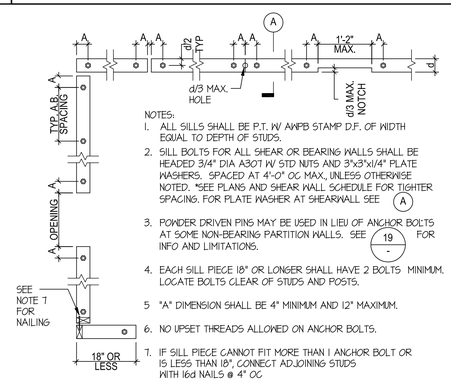

NOTES:
1. ALL SILLS SHALL BE P.T. W/ AWPB STAMP D.F. OF WIDTH EQUAL TO DEPTH OF STUDS.
2. SILL BOLTS FOR ALL SHEAR OR BEARING WALLS SHALL BE HEADED 3/4" DIA A307 W/ STD NUTS AND 3"x3"x1/4" PLATE WASHERS. SPACED AT 4'-0" OC MAX., UNLESS OTHERWISE NOTED. *SEE PLANS AND SHEAR WALL SCHEDULE FOR TIGHTER SPACING. FOR PLATE WASHER AT SHEARWALL SEE A
3. POWDER DRIVEN PINS MAY BE USED IN LIEU OF ANCHOR BOLTS AT SOME NON-BEARING PARTITION WALLS. SEE 19 FOR INFO AND LIMITATIONS.
4. EACH SILL PIECE 18" OR LONGER SHALL HAVE 2 BOLTS MINIMUM. LOCATE BOLTS CLEAR OF STUDS AND POSTS.
5. "A" DIMENSION SHALL BE 4" MINIMUM AND 12" MAXIMUM.
6. NO UPSET THREADS ALLOWED ON ANCHOR BOLTS.
7. IF SILL PIECE CANNOT FIT MORE THAN 1 ANCHOR BOLT OR IS LESS THAN 18", CONNECT ADJOINING STUDS WITH 16d NAILS @ 4" OC.
8. RETIGHTEN ALL BOLTS PRIOR TO CLOSING IN.

ANCHOR BOLT & SILL PLATE

NOT TO SCALE | 13

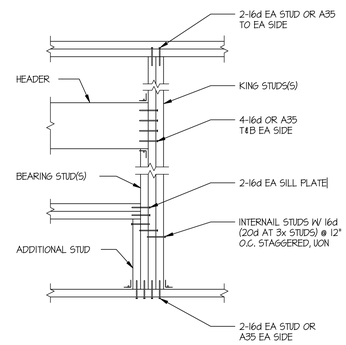

WALL OPENING

NOT TO SCALE | 14

NON-BEARING PARTITION WALL SCHEDULE [2]

OPENING WIDTH	KING STUD(S)	ADJACENT OPENINGS		HEADER SIZE [3]	BEARING STUD(S)	SILL SIZE [3]
		COMBINED WIDTH W1+ W2	KING STUD(S)			
W≤ 3'-6"	1-2x SW	-	-	2-2x SW	1-2x SW	1-2x SW
W≤ 6'-0"	2-2x SW	6'-0" MAX	3-2x SW	2-2x SW	1-2x SW	2-2x SW
W≤ 10'-0"	2-2x SW	10'-0" MAX	3-2x SW	4-2x SW	1-2x SW	2-2x SW
W≤ 15'-0"	2-2x SW	15'-0" MAX	3-2x SW	6x10	1-2x SW	2-2x SW

B

NOTES:
1. SW IS DEFINED AS STUD WIDTH.
2. INTERNAIL 2x HEADER & SILL WITH 10d @ 6" MINIMUM.
3. FOR DEFINITION OF STRUCTURAL AND NON-BEARING PARTITION WALL, SEE 7/-

WALL FRAMING SCHEDULE AT OPENING

NOT TO SCALE | 15

HANGER SCHEDULE

JOIST SIZE	JOIST TO BEAM			
	TYPICAL HANGER	FASTENERS INTO SUPPORT	SKEWED AND/OR SLOPED HANGER	FASTENERS INTO SUPPORT
2x4	LU524	4-10d	U24	4-16d
2x6	LU5210	8-10dx1-1/2"	U210	10-10dx1-1/2"
2x8	LU5210	8-10dx1-1/2"	U210	10-10dx1-1/2"
2x10	LU5210	8-10dx1-1/2"	U210	10-10dx1-1/2"
2x12	LU5210	8-10dx1-1/2"	U210	10-10dx1-1/2"
3x8	HU38/HUC38	10-16d	HU38/HUC38	10-16d
4x6	HU46/HUC46	12-16d	HU46/HUC46	12-16d
4x8	HU48	14-16d	HU48	14-16d
4x10	HU410/HUC410	18-16d	HU410/HUC410	18-16d
6x8	HU68	14-10dx1-1/2"	HU68	14-10dx1-1/2"
5 1/8 GLB	LGU5.25-SDS	SDS SCREW6	-	-

NOTES:
1. PROVIDE AND INSTALL NAILS INTO JOIST PER HANGER MANUFACTURER'S INSTRUCTIONS. INSTALL ALL HOLES TO ACHIEVE MAXIMUM VALUES AS SPECIFIED BY MFR.
2. TYPICAL HANGERS MAY BE USED UP TO 5% SKEW AND/OR 1/2"12 SLOPE. OTHERWISE PROVIDE SKEWED AND/OR SLOPED HANGERS.

HANGER SCHEDULE

NOT TO SCALE | 17

NOTES:
1. AT CONTRACTOR'S OPTIONS ANCHOR IS:

	NO CURB	
	ANCHOR SIZE	SPACING
ANCHOR BOLT	1/2" DIA	4'-0"
EXPANSION ANCHOR	1/2" DIA	4'-0"
SCREW	1/2" DIA	4'-0"
PAF	0.145" DIA	2'-8"

1. SEE DETAIL 10 ON THIS SHEET FOR TYPICAL WALL FRAMING
2. SEE DETAIL 15 ON THIS SHEET FOR FRAMING SCHEDULE AT OPENINGS.

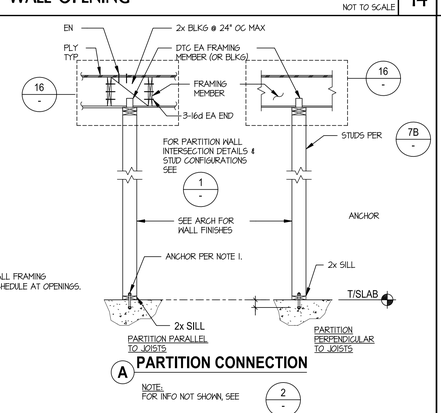

A PARTITION CONNECTION

NOTE:
FOR INFO NOT SHOWN, SEE 2

NON-BEARING WALL PARTITION

SCALE: 1/2" = 1'-0" | 19

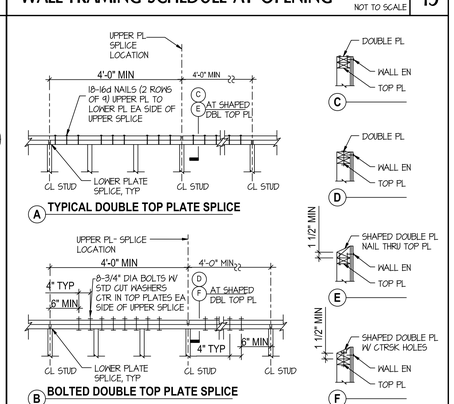

DOUBLE TOP PLATE SPLICE

NOT TO SCALE | 20

tBP
architecture
planning
interiors

tBP/Architecture
1777 Oakland Boulevard, Suite 320
Walnut Creek, CA 94596
ph: 925.246.6419

architect

DIVISION OF THE STATE ARCHITECT
1515 CLAY STREET
OAKLAND, CA94612
ph:(510) 622-3101

agency

IDENTIFICATION STAMP
DIV. OF THE STATE ARCHITECT
OFFICE OF REGULATION SERVICES
APPL # 01-116617
FILE NO. 7-C1
AC ____ FLS ____ SS ____
DATE ____

consultant

C-4008 APPLIED ARTS & ADMIN RENOVATION

2600 MISSION BELL DRIVE, SAN PABLO, CA 94806

CONTRA COSTA COMMUNITY COLLEGE DISTRICT
500 COURT STREET MARTINEZ, CA 94553

owner

tBP project number: 20865.00
file name: A901_Wood_Studs.dwg
drawn by: DM checked by:
date: APRIL 20, 2019

rev:	date:	description:
	8/17/2017	BID SET
	04/20/2019	RECORD SET

THIS DRAWING AND THE DESIGNS, DEFINITIONS, IDEAS AND OTHER INFORMATION CONTAINED HEREIN CONSTITUTE UNPUBLISHED WORK OF tBP/ARCHITECTURE AND SHALL REMAIN PROPERTY OF tBP/ARCHITECTURE IN PERPETUITY. NO PART THEREOF SHALL BE REPRODUCED, DISCLOSED, DISTRIBUTED, SOLD, PUBLISHED OR OTHERWISE USED IN ANY WAY WITHOUT THE ADVANCED EXPRESS WRITTEN CONSENT OF tBP/ARCHITECTURE.

drawing title:
TYPICAL WOOD STUD SCHEDULE & DETAILS

drawing no.:
A901

drawing of

Record Dwgs

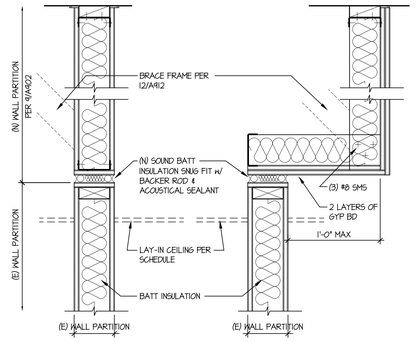

NOTE: SEE DETAIL 4/- FOR ADDITIONAL INFORMATION ON THE (N) WALL PARTITION

SOUND-RATED PARTITION @ CLASSRM 205 — 1

SCALE: 1-1/2" = 1'-0"

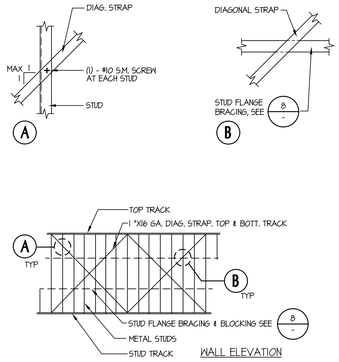

METAL STUD IN-PLANE BRACING — 2

SCALE: NONE

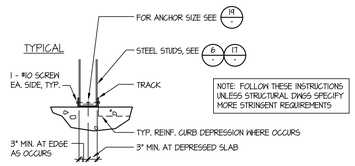

NOTE: FOLLOW THESE INSTRUCTIONS UNLESS STRUCTURAL DWGS SPECIFY MORE STRINGENT REQUIREMENTS

NON-BEARING MTL STUD PARTITION — 3

SCALE: NONE

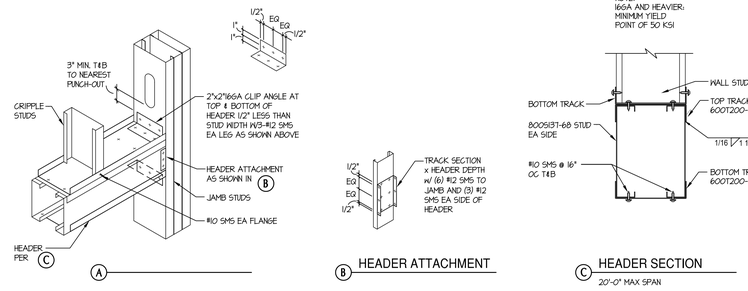

JAMB & HEADER AT STOREFRONT — 5

SCALE: NONE

ALL STUDS & TRACKS TO BE "STEELER" OR EQUAL

REF.: STEEL STUD MANUFACTURER'S ASSOCIATION (ESR-3064P)

NOMINAL SIZE	CATALOG SIZE	MINIMUM PROPERTIES Ix in4	Sx in3	Ma in-k	SPACING (INCHES)	MAX. HEIGHT H (FEET)
INTERIOR STUDS						
3 5/8" x 20GA	362S162-33	0.474	0.254	5.02	16	12'-0"
6" x 20GA	600S162-43	1.783	0.571	11.41	16	26'-3"
4" x 20GA	400S125-33	0.523	0.231	4.56	16	17'-3"
4" x 18GA	400S125-43	0.676	0.327	6.46	16	18'-4"
4" x 16GA	400S125-54	0.828	0.391	11.71	16	20'-11"
4" x 14GA	400S125-68	1.015	0.488	14.91	FOR SILLS	
6" x 20GA	600S125-33	1.391	0.408	8.06	16	23'-11"
6" x 18GA	600S125-43	1.802	0.584	11.55	16	26'-0"
6" x 16GA	600S125-54	2.218	0.706	21.14	16	27'-11"
6" x 14GA	600S125-68	2.735	0.848	26.88	FOR SILLS	
8" x 16GA	800S125-54	4.560	1.097	32.84	16	35'-6"
8" x 14GA	800S125-68	5.644	1.343	41.69	16	38'-1"
INTERIOR TRACKS						
3 5/8" x 20GA	362T162-33				TYP TRACK AT 3 5/8" STUDS	
6" x 20GA	600T162-43				TYP TRACK AT 6" STUDS *	
4" x 16GA	400T125-54	0.844	0.359	10.74	TYP TRACK AT 4" STUDS	
4" x 16GA	400T150-54	0.918	0.374	11.14	TOP TRACK	
4" x 16GA	400T200-54	1.037	0.397	11.88	CAPPING TRACK	
6" x 16GA	600T125-54	2.221	0.654	14.55	ALT TRACK AT 6" STUDS	
6" x 16GA	600T150-54	2.374	0.678	20.30	TOP TRACK	
6" x 16GA	600T200-54	2.641	0.717	21.48	CAPPING TRACK	
8" x 16GA	800T125-54	4.548	0.961	28.78	TYP TRACK AT 8" STUDS	
8" x 16GA	800T150-54	4.835	0.963	28.83	TOP TRACK	
8" x 16GA	800T200-54	5.353	0.962	28.79	CAPPING TRACK	

* FULL HT STUDS REQUIRE "SLIP-TRACK" DETAIL 12/-

METAL STUD SCHEDULE — 6

SCALE: NONE

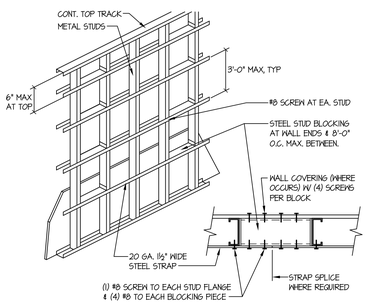

STUD FLANGE BRACING SCHEDULE	
WALL COVERING PROVIDED BOTH SIDES OF STUDS	STUD BRACING NOT REQUIRED
WALL COVERING PROVIDED ONE SIDE OF STUDS	PROVIDE STUD BRACING PER THIS DETAIL
NO WALL COVERING EITHER SIDE OF STUDS	PROVIDE STUD BRACING PER THIS DETAIL AND DIAGONAL BRACING PER 2/-

MINIMUM ATTACHMENT OF APPROVED WALL COVERINGS TO PROVIDE CONTINUOUS ADEQUATE LATERAL SUPPORT FOR STUD FLANGES	
WALL COVERING	ATTACHMENT
SINGLE-PLY GYPSUM WALLBOARD	MAX SPACING OF FASTENERS (3/8" PENETRATION): 16" O.C. FOR FRAMING @ 16" O.C. 12" O.C. FOR FRAMING @ 24" O.C.
TWO-PLY GYPSUM WALLBOARD	MAX SPACING OF FASTENERS (3/8" PENETRATION): BASE PLY: 24" O.C. FOR FRAMING @ MAX 24" O.C. FACE PLY: 12" O.C. FOR FRAMING @ MAX 24" O.C.
PLYWOOD	NO. 6 PHILLIPS BUGLE HEAD SCREWS (3/8" PENETRATION): 16" O.C. FOR FRAMING @ 16" O.C. 12" O.C. FOR FRAMING @ 24" O.C.

TYPICAL METAL STUD FLANGE BRACING — 8

SCALE: NONE

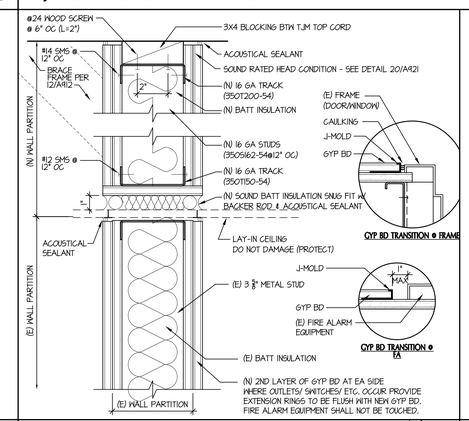

SOUND-RATED PARTITION RETROFIT — 9

SCALE: 3" = 1'-0"

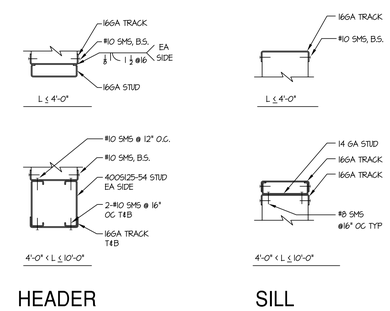

HEADER & SILL DETAILS — 10

SCALE: NONE

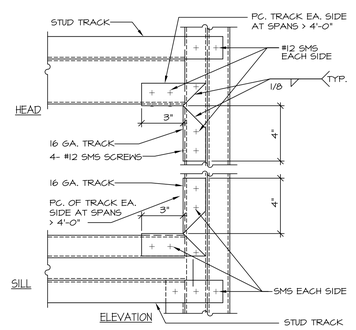

HEAD & SILL DETAILS AT JAMB — 11

SCALE: NONE

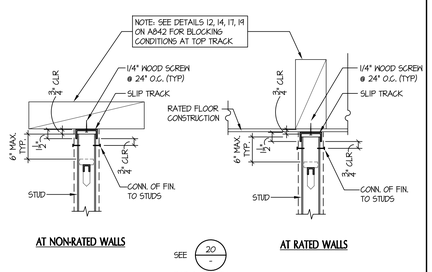

TOP CONNECTION — 12

SCALE: NONE

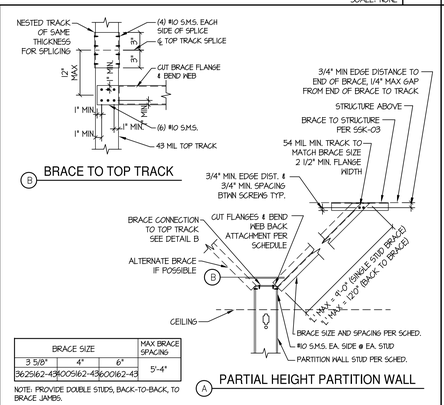

BRACE SIZE			MAX BRACE SPACING
3 5/8"	4"	6"	
362S162-43	400S162-43	600S162-43	5'-4"

NOTE: PROVIDE DOUBLE STUDS, BACK-TO-BACK, TO BRACE JAMBS.

PARTITION WALL BRACING — 13

SCALE: NONE

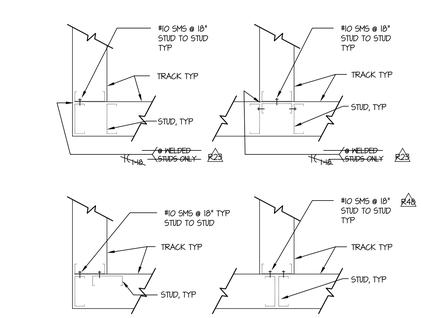

TYP CORNERS & INTERSECTIONS — 14

SCALE: NONE

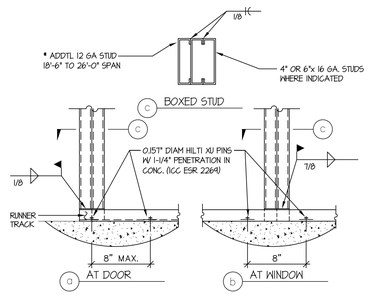

BOXED STUDS — 15

1 1/2"=1'-0"

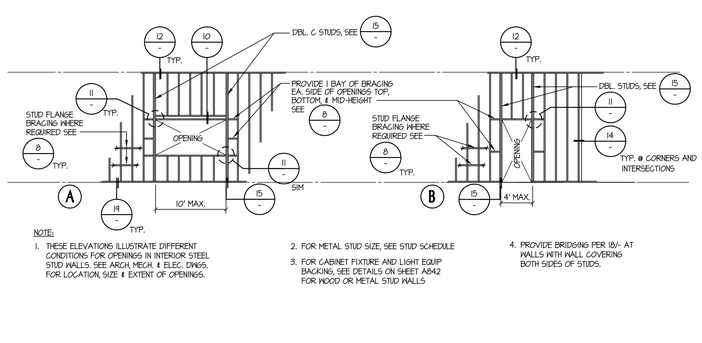

NOTE:

1. THESE ELEVATIONS ILLUSTRATE DIFFERENT CONDITIONS FOR OPENINGS IN INTERIOR STEEL STUD WALLS. SEE ARCH, MECH. & ELEC. DWGS. FOR LOCATION, SIZE & EXTENT OF OPENINGS.
2. FOR METAL STUD SIZE, SEE STUD SCHEDULE
3. FOR CABINET FIXTURE AND LIGHT EQUIP BACKING, SEE DETAILS ON SHEET A842 FOR WOOD OR METAL STUD WALLS
4. PROVIDE BRIDGING PER 18/- AT WALLS WITH WALL COVERING BOTH SIDES OF STUDS.

TYPICAL METAL STUD PARTITION ELEVATIONS — 17

SCALE: NONE

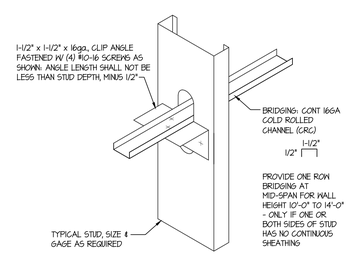

NOTE: THIS DETAIL ONLY APPLIES TO STUDS UP TO 6" IN DEPTH. REFER TO DETAIL 8/- FOR BRIDGING AT STUD DEPTHS > 6"

U-CHANNEL BRIDGING CONNECTION — 18

SCALE: NONE

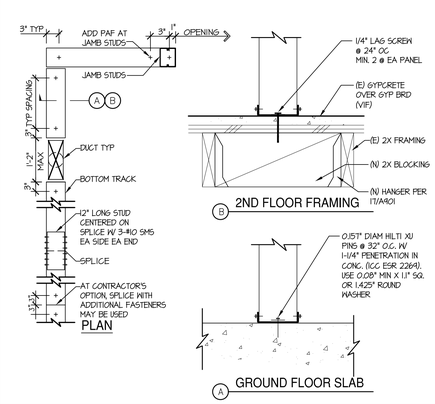

BOTTOM TRACK — 19

SCALE: N.T.S.

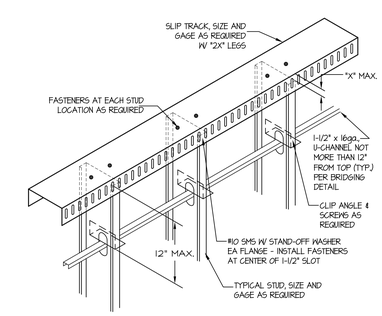

SLIP TRACK DETAIL — 20

SCALE: NONE

tBP
architecture planning interiors
tBP/Architecture
1777 Oakland Boulevard, Suite 320
Walnut Creek, CA 94596
ph: 925.246.6419
architect

consultant

IDENTIFICATION STAMP
DIV. OF THE STATE ARCHITECT
OFFICE OF REGULATION SERVICES
APPL # 01-116617
FILE NO. 7-C1
AC ___ FCS ___ SS ___
DATE ___

DIVISION OF THE STATE ARCHITECT
1515 CLAY STREET
OAKLAND, CA94612
ph:(510) 622-3101

agency

C-4008 APPLIED ARTS & ADMIN RENOVATION

2600 MISSION BELL DRIVE, SAN PABLO, CA 94806

CONTRA COSTA COMMUNITY COLLEGE DISTRICT
500 COURT STREET MARTINEZ, CA 94553

owner

tBP project number: 20865.00
file name: A902_Metal_Studs.dwg
drawn by: DM checked by:
date: APRIL 20, 2019

rev:	date:	description:
	8/17/2017	BID SET
26	12/22/17	RFI 26
23	01/04/18	RFI 23
05	01/04/18	ASI 05
48	02/06/18	RFI 48
	04/20/2019	RECORD SET

THIS DRAWING AND THE INFORMATION, DESIGN CONCEPTS, IDEAS AND OTHER INFORMATION CONTAINED HEREIN CONSTITUTE UNPUBLISHED WORK OF tBP/ARCHITECTURE AND SHALL REMAIN PROPERTY OF tBP/ARCHITECTURE IN PERPETUITY. NO PART THEREOF SHALL BE REPRODUCED, DISCLOSED, DISTRIBUTED, SOLD, PUBLISHED OR OTHERWISE USED IN ANY WAY WITHOUT THE ADVANCED EXPRESS WRITTEN CONSENT OF tBP/ARCHITECTURE.

drawing title:
TYPICAL METAL STUD SCHEDULE & DETAILS

drawing no.:
A902

drawing of

Record Dwgs

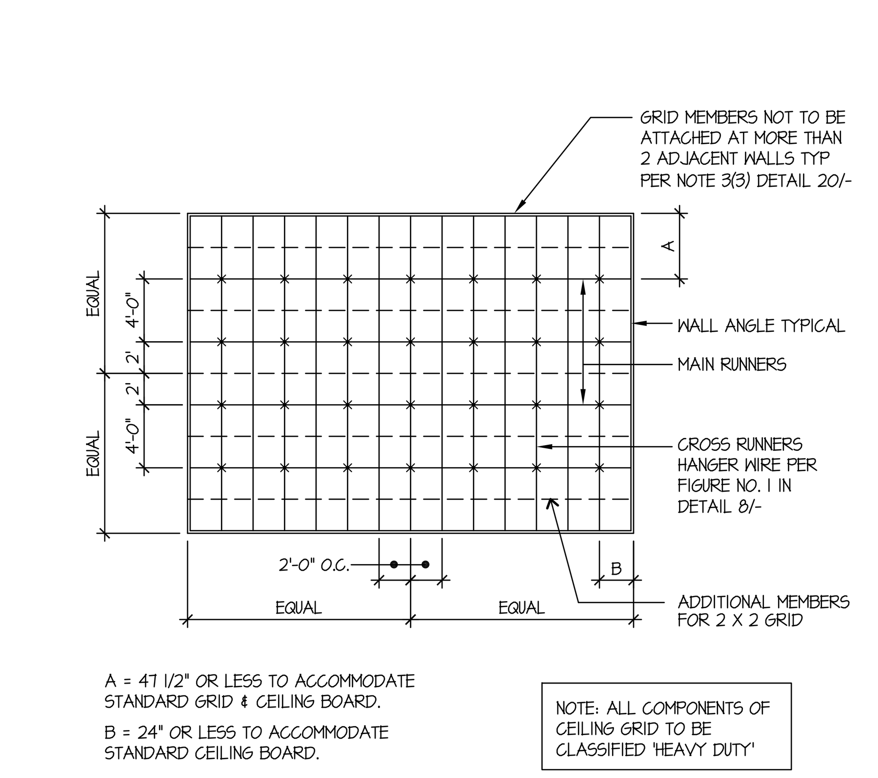

A = 4'-11 1/2" OR LESS TO ACCOMMODATE STANDARD GRID & CEILING BOARD.

B = 24" OR LESS TO ACCOMMODATE STANDARD CEILING BOARD.

TYPICAL SUPPORT PLAN AT LAY-IN CEILING — 1 — SCALE: NTS

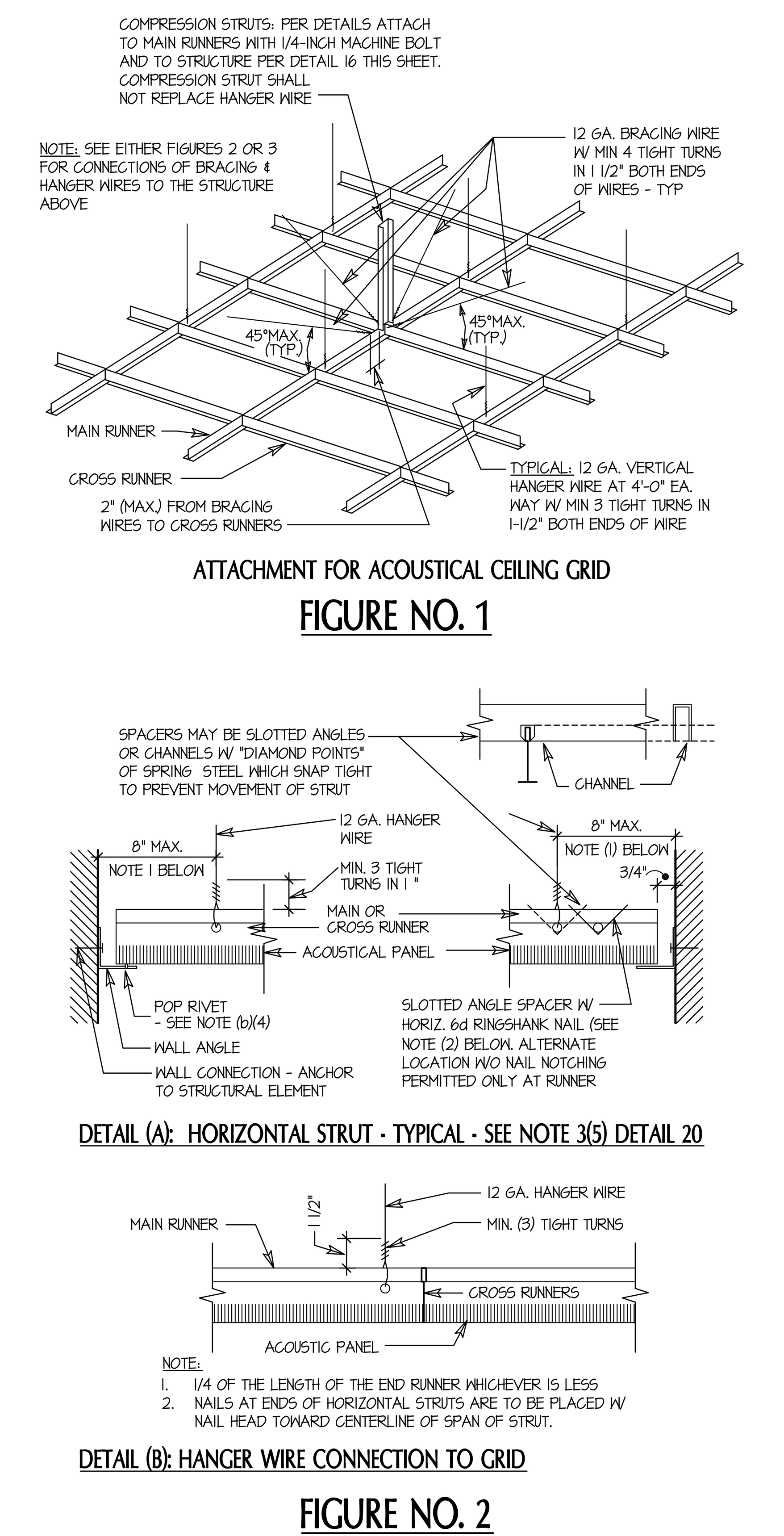

INSTALLATION OF METAL SUSPENSION SYSTEMS FOR LAY IN PANEL CEILINGS

ACCOMMODATE LIGHT FIXTURES, COMPRESSION STRUTS, CLG MOUNT PROJECTION SCREENS & PROJECTORS AS REQUIRED FOR M/E/P/T/ COORDINATION.

1. GENERAL

CBC SECTION 1616A.1.20 (1616.10.16*) REQUIRES THE DESIGN AND INSTALLATION TO BE IN COMPLIANCE WITH ASTM C635, C636 AND E580, SECTION 5, WITH MODIFICATIONS.

NOTE: AMENDMENTS IN CBC SECTION 1616A.1.20 (1616.10.16*) REPLACE AND APPEND ASCE 7, SECTION 13.5.6.

THE REQUIREMENTS IN THIS IR APPLY TO FLAT AND LEVEL CEILING SYSTEMS WHOSE TOTAL WEIGHT, INCLUDING CLG. MTD. AIR TERMINALS, SERVICES, AND LIGHT FIXTURES, DOES NOT EXCEED FOUR (4) PSF. HEAVIER SYSTEMS, SYSTEMS THAT ARE NOT FLAT AND LEVEL, THOSE SUPPORTING LATERAL LOADS FROM PARTITIONS, AND FREE FLOATING CEILINGS SUPPORTED BY CHAINS OR CABLES, ARE BEYOND THE MINIMUM REQUIREMENTS OF THIS IR AND WILL REQUIRE SPECIAL DESIGN DETAILS.

2.1 CEILING SYSTEM COMPONENTS: SHALL COMPLY WITH ASTM C635 AND SECTION 5.1 OF ASTM E580

(1) THE CEILING GRID SYSTEM MUST BE RATED HEAVY DUTY AS DEFINED BY ASTM C635

(2) MAIN RUNNERS, CROSS RUNNERS, SPLICES, EXPANSION DEVICES AND INTERSECTION CONNECTORS SHALL BE DESIGNED TO CARRY A MEAN ULTIMATE TEST LOAD OF NOT LESS THAN 180 LBS. IN COMPRESSION AND TENSION PER ASTM E580 SECTION 5.1.2.

(3) CEILING WIRE SHALL BE CLASS 1 ZINC COATED (GALVANIZED) CARBON STEEL CONFORMING TO ASTM A641. WIRE SHALL BE #12 GA. (0.106 INCHES DIAMETER) WITH SOFT TEMPER AND MIN. TENSILE STRENGTH = 70 KSI. THE MAXIMUM ALLOWABLE (ASD) TENSION LOAD FOR WIRE MEETING THIS SPECIFICATION IS 350 LBS. FOUR (4) TURNS OF THE WIRE WITHIN 1.5" WILL DEVELOP THE WIRE ALLOWABLE LOAD. THREE (3) TURNS OF THE WIRE WITHIN 3" IS ASSUMED TO DEVELOP NO MORE THAN 50 PERCENT OF WIRE ALLOWABLE LOAD.

2.2 SUSPENSION SYSTEM INSTALLATION: SHALL COMPLY WITH ASTM C636 AND SECTION 5.2 OF ASTM E580

(1) #12 GA. HANGER WIRES MAY BE USED FOR UP TO AND INCLUDING A 4-FOOT BY 4-FOOT GRID SPACING AND SHALL BE ATTACHED TO MAIN RUNNERS. SPLICES IN HANGER WIRES SHALL DEVELOP 50 PERCENT OF THE WIRE ALLOWABLE LOAD.

(2) PROVIDE #12 GA. HANGER WIRES AT THE ENDS OF ALL MAIN AND CROSS RUNNERS WITHIN EIGHT (8) INCHES OF THE SUPPORT OR WITHIN ONE-FOURTH (1/4) OF THE LENGTH OF THE END TEE, WHICHEVER IS LEAST, FOR THE PERIMETER OF THE CEILING AREA. PERIMETER WIRES ARE NOT REQUIRED WHEN THE LENGTH OF THE END TEE IS EIGHT (8) INCHES OR LESS.

(3) CEILING GRID MEMBERS SHALL BE ATTACHED TO TWO (2) ADJACENT WALLS PER ASTM E580, SECTION 5.2.3. CEILING GRID MEMBERS SHOULD BE AT LEAST 3/4-INCH CLEAR OF OTHER WALLS. IF WALLS RUN DIAGONALLY TO CEILING GRID SYSTEM RUNNERS, ONE END OF THE MAIN AND CROSS RUNNERS SHOULD BE FREE, AND A MINIMUM OF 3/4 INCH CLEAR OF THE WALL.

(4) THE WIDTH OF THE PERIMETER SUPPORTING CLOSURE ANGLE SHALL NOT BE LESS THAN 2-INCHES. USE OF ANGLES WITH SMALLER WIDTHS IN CONJUNCTION WITH PROPRIETARY PERIMETER CLIPS MAY BE ACCEPTABLE IN ACCORDANCE WITH SECTION 5.

(5) AT THE PERIMETER OF THE CEILING AREA, WHERE MAIN OR CROSS RUNNERS ARE NOT CONNECTED TO THE ADJACENT WALL, PROVIDE INTERCONNECTION BETWEEN THE RUNNERS AT THE FREE END TO PREVENT LATERAL SPREADING. A METAL STABILIZER OR A #16 GA. WIRE WITH A POSITIVE MECHANICAL CONNECTION TO THE RUNNER MAY BE USED AND PLACED WITHIN 8-INCHES OF THE WALL. WHERE THE PERPENDICULAR DISTANCE FROM THE WALL TO THE FIRST PARALLEL RUNNER IS 8-INCHES OR LESS, THE STABILIZER OR #16 GAGE WIRE IS NOT REQUIRED.

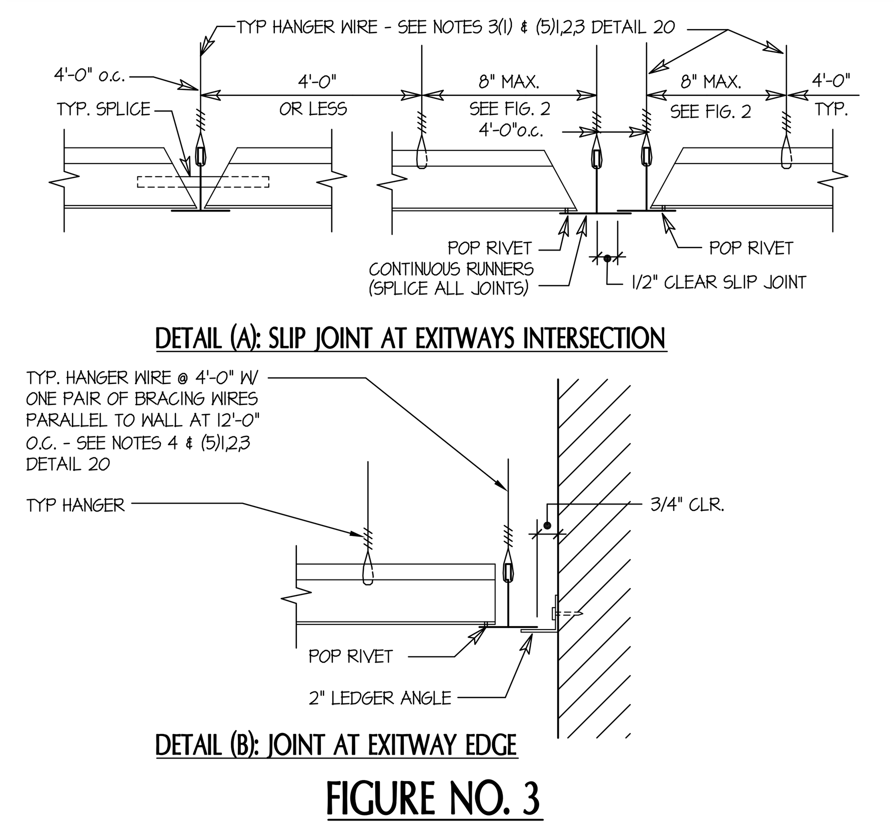

LATERAL BRACING PLAN — 6 — SCALE: NTS

TYPICAL SUPPORT PLAN AT LAY-IN CEILING — 8 — SCALE: NTS

2.3 LATERAL FORCE BRACING ASSEMBLY INSTALLATION: ASSEMBLIES CONSISTING OF A COMPRESSION STRUT AND FOUR (4) #12 GAGE SPLAYED BRACING WIRES ORIENTED 90-DEGREES FROM EACH OTHER IS REQUIRED FOR ALL CEILING AREAS.

EXCEPTION: LATERAL FORCE BRACING MAY BE OMITTED FOR SUSPENDED ACOUSTICAL CLG SYSTEMS WITH A CLG AREA NOT TO EXCEED 144 SF, FOR ALL VALUES OF Sds, WHEN PERIMETER SUPPORT IS PROVIDED IN ACCORDANCE WITH SECTION 2.2 OF THIS IR AND PERIMETER WALLS ARE DESIGNED TO CARRY THE CLG LATERAL FORCES.

(1) LATERAL FORCE BRACING ASSEMBLIES SHALL BE SPACED PER TABLE BELOW FOR ALL VALUES OF THE COMPONENT IMPORTANCE FACTOR Ip OF THE CEILING.

(2) THERE SHALL BE A BRACE ASSEMBLY A DISTANCE OF NOT MORE THAN ONE HALF OF THE ABOVE SPACING FROM EACH SURROUNDING WALL, EXPANSION JOINT AND AT THE EDGES OF ANY CEILING VERTICAL OFFSET. IE, WHERE THE BRACE SPACING IS 8-FT X 12-FT, THE EDGE DISTANCE SHALL BE 4-FT IN THE DIRECTION OF THE 8-FT SPACING AND 6-FT IN THE DIRECTION OF THE 12-FT SPACING.

(3) THE SLOPE OF BRACING WIRES SHALL NOT EXCEED 45-DEGREES FROM THE HORIZONTAL PLANE AND WIRES SHALL BE TAUT. SPLICES IN BRACING WIRES SHALL DEVELOP THE WIRE ALLOWABLE LOAD.

(4) COMPRESSION STRUTS SHALL MEET THE FOLLOWING REQUIREMENTS:

- THE STRUT SHALL BE SIZED TO ADEQUATELY RESIST THE VERTICAL COMPONENT FORCE INDUCED BY THE CLG BRACING WIRES AND HAVE A MAX. kl/r NOT TO EXCEED 300. THE STRUT SHOWN IN DETAIL 16/- MEETS THIS REQUIREMENT FOR CLGS COMPLYING WITH THESE GUIDELINES.
- THE STRUT SHALL NOT BE MORE THAN ONE (HORIZONTAL) IN SIX (VERTICAL) OUT OF PLUMB.

DESIGN SPECTRAL ACCELERATION PARAMETER SDS	BRACE ASSEMBLY SPACING (ft)	
	z/h LESS THAN OR EQUAL TO 0.5 [a]	z/h > TO 0.5 [a,b]
Sds LESS THAN OR EQUAL TO 1.15	12 x 12	12 x 12
GREATER THAN 1.15 AND LESS THAN OR EQUAL TO 1.73	12 x 12	8 x 12
Sds GREATER THAN 1.73	8 x 12	8 x 8

a. WHERE, AS DEFINED IN ASCE 7, SECTION 13.3.1:
z = HEIGHT IN STRUCTURE OF PT OF ATTACHMENT OF CLG WITH RESPECT TO THE BASE
h = AVG. ROOF HEIGHT OF THE STRUCTURE WITH RESPECT TO THE BASE

b. IT SHALL BE PERMITTED TO USE THE BRACE ASSEMBLY SPACING "z/h > 0.5" FOR THE FULL BLDG HEIGHT.

2.4 ATTACHMENT OF HANGER AND BRACING WIRES:

(1) FASTEN HANGER WIRES WITH NOT LESS THAN THREE (3) TIGHT TURNS IN 3-INCHES. HANGER WIRE LOOPS SHALL BE TIGHTLY WRAPPED AND SHARPLY BENT TO PREVENT ANY VERTICAL MOVEMENT OR ROTATION OF THE MEMBER WITHIN THE LOOPS (SEE ASTM E850, SECTION 5.2.7.2).

(2) FASTEN BRACING WIRES WITH NOT LESS THAN FOUR (4) TIGHT TURNS WITHIN A DISTANCE OF 1-1/2 INCHES

(3) HANGER AND BRACING WIRE ANCHORAGE TO THE STRUCTURE SHALL BE INSTALLED IN SUCH A MANNER THAT THE DIRECTION OF THE ANCHORAGE ALIGNS CLOSELY WITH THE DIRECTION OF THE WIRE (EG. BRACING WIRE CLG CLIPS MUST BE BENT AS SHOWN IN THE DETAILS AND ROTATED AS REQD TO ALIGN CLOSELY WITH THE DIRECTION OF THE WIRE, SCREW EYES IN WOOD MUST BE INSTALLED SO THEY ALIGN CLOSELY WITH THE DIRECTION OF THE WIRE, ETC.)

(4) SEPARATE ALL CEILING HANGING AND BRACING WIRES AT LEAST SIX (6) INCHES FROM ALL UNBRACED DUCTS, PIPES, CONDUIT, ETC.

(5) HANGER WIRES SHALL NOT ATTACH TO OR BEND AROUND OBSTRUCTIONS INCLUDING BUT NOT LIMITED TO: PIPING, DUCTWORK, CONDUIT AND EQUIPMENT. PROVIDE TRAPEZE OR OTHER SUPPLEMENTARY SUPPORT MEMBERS AT OBSTRUCTIONS TO ALLOW TYP. HANGER SPACING. BRACE ASSEMBLIES MUST BE CONFIGURED AND/OR LOCATED IN ORDER TO AVOID OBSTRUCTIONS IN ADDITION TO MAINTAINING THE REQD BRACE ASSEMBLY SPACING.

(6) PROVIDE ADDL HANGERS, STRUTS OR BRACE ASSEMBLIES AS REQD AT ALL CLG BREAKS, SOFFITS OR DISCONTINUOUS AREAS.

(7) HANGER WIRES THAT ARE MORE THAN ONE (HORIZONTAL) IN SIX (VERTICAL) OUT OF PLUMB SHALL HAVE COUNTER-SLOPING WIRES.

NOTE: SEE ASTM C636, FIGURE 1, FOR COUNTER-SLOPING METHODS.

(8) ATTACHMENT OF THE BRACING WIRES TO THE STRUCTURE ABOVE AND TO THE MAIN RUNNERS SHALL BE ADEQUATE FOR THE LOAD IMPOSED. THE WEIGHT (Wp) SHALL BE TAKEN AS NOT LESS THAN FOUR (4) PSF FOR CALCULATING SEISMIC FORCES (Fp).

(9) POST-INSTALLED ANCHOR (EG EXPANSION ANCHORS, SCREW ANCHORS AND POWER ACTUATED FASTENERS) SHALL HAVE A CURRENT EVALUATION REPORT ACCEPTABLE TO DSA IN ACCORDANCE WITH IR A-5.

(10) POWER ACTUATED FASTENERS IN CONCRETE ARE NOT PERMITTED FOR BRACING WIRES.

(11) DSA APPROVAL OF A CONSTRUCTION PLAN IS REQD PRIOR TO INSTALLING POST-INSTALLED ANCHORS IN PRE-STRESSED CONCRETE. THIS PLAN SHALL DEMONSTRATE HOW THE LOCATION OF EXISTING PRESTRESSING TENDONS AND STRANDS WILL BE LOCATED AND DENOTED AS NECESSARY TO AVOID INTERFERENCE.

2.5 EXPANSION JOINTS AND SEISMIC SEPARATION JOINTS:

(1) EXPANSION JOINTS SHALL BE PROVIDED IN THE CEILING AT INTERSECTIONS OF CORRIDORS AND AT JUNCTIONS OF CORRIDORS WITH LOBBIES OR SIMILAR AREAS.

(2) FOR CLG AREAS EXCEEDING 2,500 SF, A SEISMIC SEPARATION JT SHALL BE PROVIDED TO DIVIDE THE CEILING INTO AREAS NOT EXCEEDING 2,500 SF. IN ACCORDANCE WITH ASTM E850, SECTION 5.2.9

2.6 CEILING FIXTURES, TERMINALS AND DEVICES: ALL FIXTURES, TERMINALS AND OTHER DEVICES SHALL BE MOUNTED IN A MANNER THAT WILL NOT COMPROMISE CLG PERFORMANCE IN ACCORDANCE WITH SECTION 13.5.6.2.2 ITEM 5 OF ASCE 7 AS AMENDED BY CBC SECTION 1616A.1.20 (1616.10.16*) AND ASTM E850, SECTIONS 5.3 AND 5.4.

(1) CLG PANELS SHALL NOT SUPPORT ANY LIGHT FIXTURES, AIR TERMINALS OR DEVICES.

(2) PENETRATIONS THROUGH THE CEILING FOR SPRINKLER HEADS AND OTHER SIMLAR DEVICES THAT ARE NOT INTEGRALLY TIED TO THE CEILING SYSTEM IN THE LATERAL DIRECTION SHALL HAVE A TWO (2) INCH OVERSIZED RING, SLEEVE OR ADAPTER THROUGH THE CEILING TILE TO ALLOW FREE MOVEMENT OF ONE (1) INCH IN ALL HORIZONTAL DIRECTIONS. ALTERNATIVELY PER ASTM E850, SECTION 5.2.8.5, A FLEXIBLE SPRINKLER HOSE FITTING THAT CAN ACCOMMODATE ONE (1) INCH OF CLG MOVEMENT SHALL BE PERMITTED TO BE USED IN LIEU OF THE OVERSIZED RING, SLEEVE OR ADAPTOR.

(3) SLACK SAFETY WIRES SHALL BE CONSIDERED HANGER WIRES FOR INSTALLATION AND TESTING REQMTS

2.6.1 LIGHT FIXTURES:

1. ALL LIGHT FIXTURES SHALL BE POSITIVELY ATTACHED TO THE CLG SUSPENSION SYSTEM BY MECHANICAL MEANS PER CEC ARTICLE 410.36 TO RESIST A HORIZONTAL FORCE EQUAL TO THE WEIGHT OF THE FIXTURE. A MINIMUM OF (2) SCREWS OR APPROVED FASTENERS ARE REQUIRED AT EACH LIGHT FIXTURE, PER ASTM E850, SECTION 5.3.1

2. SURFACE MOUNTED LIGHT FIXTURES SHALL BE ATTACHED TO THE MAIN RUNNER WITH AT LEAST TWO POSITIVE CLAMPING DEVICES ON EACH FIXTURE. THE CLAMPING DEVICE SHALL COMPLETELY SURROUND THE SUPPORTING CLG RUNNER AND BE MADE OF STEEL WITH A MIN. THICKNESS OF #14 GA. ROTATIONAL SPRING CATCHES DO NOT COMPLY. A #12 GA. SLACK SAFETY WIRE SHALL BE CONNECTED FROM EACH CLAMPING DEVICE TO THE STRUCTURE ABOVE. PROVIDE ADDITIONAL SUPPORTS WHEN LIGHT FIXTURES ARE 8 FEET OR LONGER OR EXCEED 56 LBS. MAXIMUM SPACING BETWEEN SUPPORTS SHALL NOT EXCEED EIGHT (8) FEET.

3. LIGHT FIXTURES WEIGHING LESS THAN OR EQUAL TO 10 LBS. SHALL HAVE A MINIMUM OF ONE (1) #12 GA. SLACK SAFETY WIRE CONNECTED FROM THE FIXTURE HOUSING TO THE STRUCTURE ABOVE.

4. LIGHT FIXTURES WEIGHING GREATER THAN 10 LBS. BUT LESS THAN OR EQUAL TO 56 LBS MAY BE SUPPORTED DIRECTLY ON CLG RUNNER, BUT THEY SHALL HAVE A MINIMUM OF TWO (2) #12 GA. SLACK SAFETY WIRES CONNECTED FROM THE FIXTURE HOUSING AT DIAGONAL CORNERS TO THE STRUCTURE ABOVE.

EXCEPTION: ALL LIGHT FIXTURES GREATER THAN TWO BY FOUR FEET WEIGHING LESS THAN 56 LBS SHALL HAVE A #12 GA. SLACK SAFETY WIRE AT EACH CORNER

5. ALL LIGHT FIXTURES WEIGHING GREATER THAN 56 LBS SHALL BE INDEPENDENTLY SUPPORTED BY NOT LESS THAN FOUR (4) TAUT #12 GA. WIRES (ONE AT EACH CORNER) ATTACHED FROM THE FIXTURE HOUSING TO THE STRUCTURE ABOVE OR OTHER APPROVED HANGERS. THE FOUR (4) TAUT #12 GA. WIRES OR OTHER APPROVED HANGERS, INCLUDING THEIR ATTACHMENT TO THE STRUCTURE ABOVE, SHALL BE CAPABLE OF SUPPORTING FOUR (4) TIMES THE WEIGHT OF THE FIXTURE.

2.6.2 SERVICES WITHIN THE CEILING:

1. ALL FLEXIBLE SPRINKLER HOSE FITTING MOUNTING BRACKETS, CEILING-MOUNTED AIR TERMINALS OR OTHER SERVICES SHALL BE POSITIVELY ATTACHED TO THE CEILING SUSPENSION SYSTEM BY MECHANICAL MEANS TO RESIST A HORIZONTAL FORCE EQUAL TO THE WEIGHT OF THE COMPONENT. SCREWS OR APPROVED FASTENERS ARE REQUIRED. A MINIMUM OF TWO ATTACHMENTS ARE REQUIRED AT EACH COMPONENT.

2. CEILING -MOUNTED AIR TERMINALS OR OTHER SERVICES WEIGHING LESS THAN OR EQUAL TO 20 LBS. SHALL HAVE ONE (1) #12 GA. SLACK SAFETY WIRE ATTACHED FROM THE TERMINAL OR SERVICE TO THE STRUCTURE ABOVE.

3. FLEXIBLE SPRINKLER HOSE FITTINGS, CEILING MOUNTED AIR TERMINALS OR OTHER SERVICES WEIGHING MORE THAN 20 LBS. BUT LESS THAN OR EQUAL TO 56 LBS. SHALL HAVE TWO (2) #12 GA. SLACK SAFETY WIRES (AT DIAGONAL CORNERS) CONNECTED FROM THE TERMINAL OR SERVICE TO THE STRUCTURE ABOVE.

4. FLEXIBLE SPRINKLER HOSE FITTINGS, CEILING-MOUNTED AIR TERMINALS OR OTHER SERVICES WEIGHING MORE THAN 56 LBS. SHALL BE SUPPORTED DIRECTLY FROM THE STRUCTURE ABOVE BY NOT LESS THAN FOUR (4) TAUT #12 GA. HANGER WIRES ATTACHED FROM THE TERMINAL OR SERVICE TO THE STRUCTURE ABOVE OR OTHER APPROVED HANGERS. THE FOUR (4) TAUT #12 GA. WIRES OR OTHER APPROVED HANGERS, INCLUDING THEIR ATTACHMENT TO THE STRUCTURE ABOVE, MUST BE CAPABLE OF SUPPORTING FOUR (4) TIMES THE WEIGHT OF THE UNIT.

2.6.3 OTHER DEVICES WITHIN THE CEILING: ALL LIGHTWEIGHT MISC. DEVICES, SUCH AS STROBE LIGHTS, OCCUPANCY SENSORS, SPEAKERS, EXIT SIGNS, ETC. SHALL BE ATTACHED TO THE CEILING GRID PER SECTION 2.6.2 a) OF THIS IR. IN ADDITION, DEVICES WEIGHING MORE THAN 10 LBS. SHALL HAVE A #12 GA. SLACK SAFETY WIRE ANCHORED TO THE STRUCTURE ABOVE PER SECTION 2.6.1. b) OF THIS IR. DEVICES WEIGHING MORE THAN 20 LBS. SHALL BE SUPPORTED FROM THE STRUCTURE ABOVE USING DETAILS PROVIDED BY THE REGISTERED DESIGN PROFESSIONAL (RDP).

3. ADDITIONAL REQUIREMENTS

3.1 PENDANT MOUNTED LIGHT FIXTURES:

(1) WHERE THESE FIXTURES ARE TO BE INSTALLED IN AREAS WITH A SUSPENDED CEILING, THE CONSTRUCTION DOCUMENTS SHALL INCLUDE COMPLETE SUPPORT DETAILS COMPLYING WITH THESE GUIDELINES AND DSA IR 16-9.

(2) SUPPORT PENDANT MOUNTED LIGHT FIXTURES DIRECTLY FROM THE STRUCTURE ABOVE WITH HANGER WIRES OR CABLES PASSING THROUGH EACH PENDANT HANGER AND CAPABLE OF SUPPORTING TWO (2) TIMES THE WEIGHT OF THE FIXTURE.

(3) IF A PENDANT MOUNTED LIGHT FIXTURE IS DIRECTLY AND INDEPENDENTLY BRACED BELOW THE CEILING, IE AIRCRAFT CABLES TO WALLS, THEN A BRACE ASSEMBLY IS NO REQUIRED ABOVE THE CEILING.

(4) IF A PENDANT MOUNTED LIGHT FIXTURE IS FREE TO SWING 45-DEGREES FROM VERTICAL IN ALL DIRECTIONS AND IS NOT DIRECTLY AND INDEPENDENTLY BRACED BELOW THE CEILING, THEN A BRACING ASSEMBLY IS REQUIRED WHERE THE PENDANT HANGER PENETRATES THE CEILING. SPECIAL DETAILS ARE REQUIRED TO ATTACH THE PENDANT HANGER TO THE BRACING ASSEMBLY TO TRANSMIT THE HORIZONTAL AND VERTICAL FORCES. EXCEPTION: WHERE THE WEIGHT OF THE FIXTURE IS LESS THAN 20 LBS., THE VERTICAL COMPONENT OF THE BRACE FORCE NEED NOT BE CONSIDERED, SO NO COMPRESSION STRUT/POST IS REQD.

(5) RIGID CONDUIT SHALL NOT BE USED FOR ATTACHMENT OF THE FIXTURES.

3.2 FIRE RATED CEILINGS

(1) PROVIDE A DETAIL AND LISTING NUMBER FOR RATED CLG ASSEMBLIES FROM AN AUTHORIZED TESTING AGENCY. THE COMPONENTS AND INSTALLATION DETAILS MUST CONFORM IN EVERY RESPECT WITH THE LISTED DETAIL AND NUMBER. DETAILS SHALL CLEARLY DEPICT ALL COMPONENTS, INCLUDING INSULATION MATERIALS, FRAMING AND ATTACHMENT OF THE DESIGN SO THAT THE ASSEMBLY CAN BE CONSTRUCTED AND INSPECTED ACCORDINGLY.

(2) POP RIVETS, SCREWS, OR OTHER ATTACHMENTS ARE NOT ACCEPTABLE UNLESS SPECIFICALLY DETAILED IN THE DRAWINGS AND AN APPROVED LISTING BY A STATE FIRE MARSHAL (SFM) RECOGNIZED LABORATORY.

3.3 ACOUSTICAL CEILING TILE PANEL INSTALLATION: FOR CLG INSTALLATIONS UTILIZING ACOUSTICAL TILE PANELS OF MINERAL OR GLASS FIBER, IT IS NOT MANDATORY TO PROVIDE 3/4-INCH CLEARANCE BETWEEN THE ACOUSTICAL TILE PANEL AND THE WALL ON THE SIDES OF THE CEILING WHICH ARE FREE TO SLIP.

3.4 OTHER PANEL TYPES: PANELS WEIGHING MORE THAN ONE-HALF (1/2) PSF, OTHER THAN MINERAL FIBER AND GLASS FIBER ACOUSTICAL TILE, AND ALL METAL AND WOOD PANELS SHALL BE POSITIVELY ATTACHED TO THE CEILING SUSPENSION RUNNERS BY MECHANICAL MEANS, SUCH AS BOLTS, SCREWS, OR RIVETS, AND EACH ATTACHMENT SHALL HAVE THE ALLOWABLE DESIGN STRENGTH TO SUPPORT 100 PERCENT OF THE WEIGHT OF THE PANEL ACTING IN ANY DIRECTION. A MINIMUM OF TWO ATTACHMENTS ARE REQUIRED FOR EACH PANEL. FOR CEILING INSTALLATIONS UTILIZING PANELS OTHER THAN MINERAL OR GLASS FIBER, 3/4-INCH CLEARANCE SHALL BE PROVIDED BETWEEN THE CEILING PANEL AND THE WALL ON THE SIDES OF THE CEILING AREA WHICH ARE FREE TO SLIP, UNLESS OTHERWISE JUSTIFIED BY SEISMIC QUALIFICATION INDICATED BELOW.

THE USE OF OTHER TYPES OF ATTACHMENT, SUCH AS CLIPS, SNAP-IN DEVICES, PERFORATED LIPS, CLAMPING DEVICES, OR SPRING LOADED DEVICES OR HOOKS, SHALL BE LISTED PER DSA IR A-5 AND IDENTIFIED FOR USE WITH THE TYPE OF CEILING FRAMING MEMBERS AND PANELS. THE LISTING SHALL BE SEISMICALLY QUALIFIED IN ACCORDANCE WITH ASCE 7 SECTION 13.2.5 OR 13.2.6.

AN ALTERNATE MEANS OF COMPLIANCE PER CAC 4-304 MAY BE PROPOSED AND REVIEWED ON A PROJECT BY PROJECT BASIS WHEN USING UNLISTED MEANS OF ATTACHMENT. THE ALTERNATE MEANS OF ATTACHMENT SHALL HAVE THE ALLOWABLE DESIGN STRENGTH TO SUPPORT 100 PERCENT OF THE WEIGHT OF THE PANEL ACTING IN ANY DIRECTION AND SHALL BE CAPABLE OF MAINTAINING THAT STRENGTH IF THE CEILING GRID IS DISTORTED OR OUT OF LEVEL.

IT IS ALSO ALTERNATELY PERMITTED TO PROVIDE A SECONDARY MEANS OF CONNECTING THE PANEL TO THE GRID OR STRUCTURE TO RETAIN THE PANEL IN CASE OF PANEL DROPOUT, CEILING GRID DISTORTION, AND CEILING GRID BECOMING OUT-OF-LEVEL. THE SECONDARY ATTACHMENT SHALL HAVE THE ALLOWABLE DESIGN STRENGTH TO SUPPORT TWO (2) TIMES THE WEIGHT OF THE PANEL ACTING IN ANY DIRECTION, SUCH AS A SLACK WIRE OR CABLE.

SPECIAL ATTACHMENT DETAILS COMPLYING WITH ONE OF THE METHODS OUTLINED ABOVE, SUCH AS SCREWS OR CABLES, SHALL BE PROVIDED AT THE PERIMETER OF THE CEILING, WHERE PANELS ARE CUT OR ALTERED, OR WHERE NON-STANDARD PANEL SIZES OR EDGE CONDITIONS OCCUR.

3.5 EXITWAYS: EXITWAYS OF ESSENTIAL SERVICES BUILDINGS SHALL BE INSTALLED IN ACCORDANCE WITH SECTION 13.5.6.2.2 ITEM 1 OF ASCE 7 AS AMENDED BY CBC SECTION 1616A.1.20 (1616.10.16*). A MAIN OR CROSS RUNNER SHALL BE INSTALLED ON ALL SIDES OF EACH PIECE OF TILE, BOARD OR PANEL AND EACH LIGHT FIXTURE OR GRILL. SPLICES OR INTERSECTION OF SUCH RUNNERS SHALL BE ATTACHED WITH THROUGH CONNECTORS SUCH AS POP RIVETS, SCREWS, PINS, PLATES WITH END TABS OR OTHER APPROVED CONNECTORS.

3.6 FREE FLOATING CEILINGS: FREE FLOATING CLGS (CLGS NOT ATTACHED TO ANY WALLS) SUPPORTED BY WIRES IN ACCORDANCE WITH THESE GUIDELINES SHALL BE BRACED IN ACCORDANCE WITH THESE GUIDELINES REGARDLESS OF THE CLG AREA, UNLESS IT CAN BE DEMONSTRATED THE ANTICIPATED CLG MOVEMENT WILL NOT CAUSE FAILURE OF THE CLG COMPONENTS OR FAILURE OF MECHANICAL, ELECTRICAL, PLUMBING, AND FIRE AND LIFE SAFETY COMPONENTS/SYSTEMS WITHIN THE CLG AREA AND WITHIN THE AREA OF ANTICIPATED MOVEMENT. THE PERIMETER OF FREE FLOATING CLGS SHALL BE SUPPORTED BY A CONTINUOUS RUNNER WHICH IS SPLICED IN ACCORDANCE WITH ASTM E580 SECTION 5.1.2.

4. CEILING SYSTEM ALTERATION: THE ENTIRE CLG IN THE AFFECTED SPACE SHALL BE UPGRADED TO MEET THE CURRENT REQUIREMENTS OF THE CBC AND THIS IR IF ANY PORTION OF THE GRID SYSTEM IS CUT OR ALTERED.

4.1 WHERE THE CLG GRID IS NOT CUT OR ALTERED, AND THE SCOPE OF WORK INCLUDES ONLY THE FOLLOWING:

(1) REPLACEMENT OF EXISTING CEILING PANELS WITH LIKE PANELS OF EQUAL OR LESSER WEIGHT.

(2) REPLACEMENT OF LIGHT FIXTURES AND/OR TERMINALS WITH LIKE UNITS (UNITS OF EQUAL SIZE AND OR EQUAL OR LESSER WEIGHT) PLACED IN THE SAME LOCATION.

NO UPGRADE TO THE CEILING GRID, SUSPENSION SYSTEM OR LATERAL FORCE BRACE ASSEMBLIES IS REQD.

4.2 RE-USE OF EXISTING CEILING HANGER WIRES AND BRACING WIRES: EXISTING CLG HANGER AND BRACING WIRES MAY BE REUSED PROVIDED THEY COMPLY WITH THE FOLLOWING:

1. THE GAGE AND SPACING OF THE WIRES MUST COMPLY WITH THE CURRENT APPLICABLE CODES AND THIS IR.
2. IF A NEW WIRE IS TO BE SPLICED TO AN EXISTING WIRE, THE ARCHITECT OR STRUCTURAL ENGINEER IN GENERAL RESPONSIBLE CHARGE MUST SUBMIT TO THE DSA FOR APPROVAL A DETAIL AND SPECIFICATION DESCRIBING HOW THE SPLICE IS TO BE MADE.
3. SEE SECTION 7 FOR TESTING REQUIREMENTS FOR THE REUSE OF EXISTING HANGER AND BRACING WIRE ASSEMBLIES.

5. DSA ACCEPTANCE OF EVALUATION REPORTS: CLG GRID SYSTEMS OR COMPONENTS, WITH VALID EVALUATION REQUIRES ISSUED BY QUALIFIED EVALUATION AGENCIES, IN ACCORDANCE WITH DSA u, ARE ACCEPTED BY DSA, PROVIDED THE SYSTEM OR COMPONENT MEETS THE REQUIREMENTS OF CBC SECTION 1616A.1.20 (1616.10.16*), ASTM C635, C636 AND E850. WHERE A QUALIFIED EVALUATION REPORT IS UTILIZED, THE INSTALLATION SHALL COMPLY WITH ALL THE REQUIREMENTS SPECIFIED IN THE EVALUATION REPORT, IE CONNECTIONS, MEMBER SIZES, PERIMETER DETAILS, SPECIAL CLIPS TO WALL ANGLES ETC.

IN ACCORDANCE WITH DSA IR A-5, DSA WILL ACCEPT OSHPD PREAPPROVED DETAILS (OPD) "2013 CBC STANDARD SUSPENDED CEILING DETAILS FOR ACOUSTICAL TILE OR LAY-IN PANEL CEILINGS."

6. CONSTRUCTION DOCUMENTS: DRAWINGS SHALL CLEARLY IDENTIFY ALL SUSPENDED CLG SYSTEMS, SUPPORT DETAILS, AND LATERAL BRACING.

6.1 GENERAL REQUIREMENTS: THE ITEMS LISTED IN THIS SECTION ARE REQD TO BE PROVIDED IN THE CONSTRUCTION DOCUMENTS WHERE APPLICABLE TO THE PROJECT SCOPE. THIS LIST INCLUDES ITEMS COMMON TO MOST PROJECTS BUT IS NOT COMPLETE FOR ALL PROJECTS. ADDITIONAL INFORMATION AND/OR DETAILS MAY BE REQD ON THE CONSTRUCTION DOCUMENTS FOR A SPECIFIC PROJECT FOR SPECIALTY CONDITIONS, CONFIGURATIONS, PRODUCTS, ETC.

EXCEPT AS INDICATED IN SECTION 6.2 AND APPENDIX A, IT IS NOT PERMITTED TO REPRODUCE THIS IR ON THE CONSTRUCTION DOCUMENTS AS A MEANS TO MEET THESE REQUIREMENTS:

6.1.1 CEILING SYSTEMS: A LIST OF ACCELTABLE GRID SYSTEMS MUST BE SHOWN ON THE CONSTRUCTION DOCUMENTS. EACH SYSTEM SPECIFIED MUST BE CLASSIFIED AS HEAVY DUTY AND SHALL HAVE A VALID EVALUATION REPORT IN ACCORDANCE WITH DSA IR A-5. THE CONSTRUCTION DOCUMENTS SHALL SPECIFY THE FOLLOWING FOR EACH ACCEPTABLE GRID SYSTEM: THE MANUFACTURER, PRODUCT NAME, EVALUATION REPORT NUMBER, MAIN AND CROSS RUNNER CATALOG NUMBER, AND IF USED, SEISMIC WALL CLIP. WHEN MANUFACTURER SPECIFIC INFORMATION (PROPRIETARY SEISMIC WALL CLIPS ETC.) IS PROVIDED IN THE SPECIFICATIONS DETAILS ON THE CONSTRUCTION DRAWINGS SHALL BE PROVIDED AND/OR COORDINATED TO REFLECT THE SAME MANUFACTURER SPECIFIC INFORMATION.

6.1.2 CEILING SUSPENSION SYSTEM: THE CLG SUSPENSION SYSTEM AND ITS ANCHORAGE TO THE STRUCTURE SHALL BE FULLY DETAILED.

WHERE ACCEPTED PROPRIETARY DEVICES, CLIPS, WALL ANGLES, ETC. ARE UTILIZED, THE DETAILS ON THE CONSTRUCTION DOCUMENTS SHALL CLEARLY INDICATE THE INSTALLATION DETAILS NECESSARY TO SHOW COMPLIANCE WITH ALL EVALUATION REPORT REQUIREMENTS.

6.1.3 CEILING LATERAL FORCE BRACING: THE CLG LATERAL FOCE BRACING SYSTEM, INCLUDING THE BRACING WIRES AND COMPRESSION STRUT, AND THE BRACING SYSTEM ANCHORAGE TO THE STRUCTURE SHALL BE FULLY DETAILED ON THE CONSTRUCTION DOCUMENTS. THE BRACING ASSEMBLY SPACING AT EACH FLOOR AND ROOF LEVEL MUST BE CLEARLY INDICATED.

6.1.4 EXPANSION JOINTS AND SEISMIC SEPARATIONS JOINTS: EXPANSION JOINTS AND SEISMIC SEPARATION JOINTS SHALL BE FULLY DETAILED AND THE LOCATION SHALL BE SHOWN ON THE CLG PLANS.

6.1.5 CEILING FIXTURES, TERMINALS, AND DEVICES ANCHORAGE AND BRACING: DETAILS OF CONSTRUCTION FOR ALL FIXTURES, TERMINALS, FLEXIBLE FIRE SPRINKLER HOSE FITTINGS, AND OTHER DEVICES AS REQD TO COMPLY WITH THIS IR.

6.1.6 PENDANT MOUNTED LIGHT FIXTURES: WHERE PENDANT MOUNTED LIGHT FIXTURES ARE TO BE INSTALLED WITH A SUSPENDED CLG, THE CONSTRUCTION DOCUMENTS SHALL INCLUDE COMPLETE SUPPORT DETAILS COMPLYING WITH THIS IR AND DSA IR 16-9.

6.1.7 SUPPLEMENTARY SUPPORT MEMBERS: TRAPEZE OR OTHER SUPPLEMENTARY SUPPORT MEMBERS PROVIDED SO TYP. HANGER SPACING CAN BE MAINTAINED WHILE AVOIDING OBSTRUCTIONS SHALL BE SHOWN ON THE CONSTRUCTION DOCUMENTS.

6.1.8 PARTITION BRACING: PARTITION BRACING SHALL BE SHOWN ON THE CONSTRUCTION DOCUMENTS AND BE BRACED INDEPENDENT OF THE CLG SYSTEM

6.2 CEILING NOTES AND DETAILS IN APPENDIX A: THE CEILING NOTES AND DETAILS PROVIDED IN APPENDIX A ARE DEEMED TO MEET THE GENERAL REQUIREMENTS OF THE IR. THESE NOTES AND DETAIL SHALL NOTE BE USED FOR CONSTRUCTION OR INSPECTION EXCEPT WHEN INCORPORATED IN DSA APPROVED CONSTRUCTION DOCUMENTS.

USE OF THE NOTES AND DETAILS IS NOT MANDATED BY THE DSA; THEY ARE PROVIDED ONLY AS A CONVENIENCE TO THE REGISTERED DESIGN PROFESSIONAL FOR INCORPORATION INTO THE CONSTRUCTION DOCUMENTS.

USE OF OTHER NOTES AND DETAILS CREATED BY THE REGISTERED DESIGN PROFESSIONAL IS ALWAYS ACCEPTABLE PROVIDED THEY COMPLY WITH THE CBC AND THIS IR. WHILE THESE NOTES AND DETAILS DO NOT COVER EVERY CONDITION THAT MAY OCCUR ON EVERY PROJECT, THEY ARE INTENDED TO COVER CONDITIONS COMMON TO MANY PROJECTS; AND IT IS ANTICIPATED THEIR USE WILL FACILITATE THE DESIGN, PLAN REVIEW, AND CONSTRUCTION PROCESS.

6.2.1 CONDITIONS FOR USE OF CEILING NOTES AND DETAILS: THE CONDITIONS AND REQUIREMENTS FOR USE OF THE CEILING NOTES AND DETAILS IN APPENDIX A ARE AS FOLLOWS:

(1) THE DETAILS GIVE NO CONSIDERATION TO SUITABILITY FOR USE IN A SPECIFIC APPLICATION, COMPATIBILITY WITH OTHER BUILDING SYSTEMS, APPROPRIATE USE OF MATERIALS OR DESIGN, APPEARANCES, ETC. THE RDPS LISTED ON THE PLAN REVIEW APPLICATION SHALL REVIEW ALL SUCH QUALITIES, FEATURES, AND/OR PROPERTIES TO ENSURE CODE COMPLIANCE, APPROPRIATE INTEGRATION WITH OTHER BUILDING SYSTEMS, AND PROPER DESIGN FOR THE PROJECT-SPECIFIC CONDITIONS AND INSTALLATION.

(2) WHEN THE DETAILS IN THE APPENDIX ARE USED, THEY SHALL BE INCORPORATED INTO THE CONSTRUCTION DRAWINGS SUBMITTED FOR DSA APPROVAL. INCORPORATION BY REFERENCE ALONE IS NOT PERMITTED. ONLY THE NOTES AND DETAILS APPLICABLE TO THE SCOPE OF THE PROJECT SHALL BE INCORPORATED IN THE CONSTRUCTION DOCUMENTS (E.G. DO NOT INCORPORATE WOOD CONNECTION DETAILS IN THE CONSTRUCTION DRAWINGS FOR A CONCRETE STRUCTURE, DO NOT INCLUDE ESSENTIAL SERVICES BUILDING DETAILS IN THE CONSTRUCTION DOCUMENTS FOR A SCHOOL PROJECT, ETC.

(3) PROVIDED THE CONTENT OF THE DETAILS IS NOT CHANGED, IT IS LEFT TO THE DISCRETION OF THE RDP(S) TO RECONFIGURE (RENUMBER, RESIZE...) THE DETAILS FOR INTEGRATION INTO THE CONSTRUCTION DRAWINGS.

EXCEPTION: THE REGISTERED DESIGN PROFESSIONAL(S) IS REQD TO PROVIDE ADDITIONAL INFORMATION ON A DETAIL WHERE BRACKETS [] ARE INDICATED. THE BRACKETS AND NOTES TO THE REGISTERED DESIGN PROFESSIONAL SHALL BE REMOVED FROM THE DETAILS AND REPLACED WITH THE APPLICABLE REQUIREMENTS.

(4) THESE DETAILS SUBMITTED AS PART OF THE CONSTRUCTION DOCUMENTS DURING THE PLAN REVIEW PROCESS WILL BE SUBJECT TO PLAN REVIEW AS FOLLOWS:

- IT IS EXPECTED NO DSA PLAN REVIEW COMMENT WILL BE MADE ON A DETAIL INCORPORATED INTO THE CONSTRUCTION DOCUMENTS THAT IS UNALTERED AND FOUND APPLICABLE TO THE PROJECT FOR WHICH IT IS SUBMITTED.
- WHERE A DETAIL REQUIRES THE DESIGNER TO PROVIDE ADDITIONAL INFORMATION TO COMPLETE THE DETAIL BEFORE APPLYING IT TO THE DRAWINGS, PLAN REVIEW WILL BE LIMITED TO THE FOLLOWING:
  - A REVIEW OF ONLY THE ADDITIONAL INFORMATION PROVIDED.
  - A REVIEW TO DETERMINE IF THE DETAIL, WITH THE ADDITIONAL INFORMATION, ES APPLICABLE TO PROJECT FOR WHICH IT IS SUBMITTED.

(5) WHERE CONDITIONS NOT COVERED BY THE DETAILS IN APPENDIX A OCCUR, PROJECT SPECIFIC DESIGN AND DETAILS WILL BE REQD. THIS INCLUDES, BUT IS NOT LIMITED TO, PENDANT LIGHT FIXTURES, PROJECTOR SUPPORTS, PROJECTOR SCREENS, CEILING FANS, AND FREE-FLOATING CEILINGS.

7. TESTING: ALL FIELD TESTING MUST BE PERFORMED IN THE PRESENCE OF THE PROJECT INSPECTOR OR A SPECIAL INSPECTOR.

7.1 NEW INSTALLATIONS:

POST-INSTALLED ANCHORS IN CONCRETE USED TO SUPPORT HANGER WIRES SHALL BE TESTED AT A FREQUENCY OF 10 PERCENT. POWER ACTUATED FASTENERS IN CONCRETE SHALL BE FIELD TESTED FOR 200 LBS. IN TENSION. ALL OTHER POST-INSTALLED ANCHORS SHALL BE TESTED IN ACCORDANCE WITH CBC SECTION 1913A.7.

POST-INSTALLED ANCHORS IN CONCRETE USED TO ATTACH BRACING WIRES SHALL BE TESTED AT A FREQUENCY OF 50 PERCENT IN ACCORDANCE WITH CBC SECTION 1913A.7

7.2 RE-USE OF EXISTING CEILING HANGER WIRES AND BRACING WIRES:

(1) ALL EXISTING CEILING HANGER WIRE/ANCHOR ASSEMBLIES MUST BE TESTED TO 200LBS.

(2) ALL EXISTING BRACING WIRE/ANCHOR ASSEMBLIES MUST BE FIELD TESTED TO 440 LBS.

(3) WHERE A NEW WIRE IS SPLICED TO AN EXISTING WIRE, EACH SPLICED WIRE/ANCHOR ASSEMBLY MUST BE FIELD TESTED TO THE LOADS GIVEN FOR EXISTING ASSEMBLIES ABOVE.

1. CEILING SYSTEM GENERAL NOTES:

(1) CLG SYSTEM COMPONENTS SHALL COMPLY WITH ASTM C635-07 AND SECTION 5.1 OF ASTM E580-10A.

(2) THE CLG GRID SYSTEM MUST BE RATED HEAVY DUTY AS DEFINED BY ASTM 635-08.

ARMSTRONG COMMERCIAL CEILINGS AND WALLS SUPRAFINE XL SUSPENSION SYSTEM (BASIS OF DESIGN)

CLASSIFICATION OF CEILING GRID IS HEAVY DUTY AS DEFINED BY ASTM C635-08.

MANUFACTURER'S CATALOG NUMBER - MAIN RUNNER IS	ARMSTRONG 7501HRC 12' HD MAIN BEAM
MANUFACTURER'S CATALOG NUMBER - CROSS RUNNER IS	ARMSTRONG XL7540 4' CROSS TEE
MANUFACTURER'S CATALOG NUMBER - RUNNER SPLICE IS	ARMSTRONG SEPARATION JOINT SJMR
MANUFACTURER'S CATALOG NUMBER - SEISMIC WALL CLIP IS	ARMSTRONG BERC2 CLIPS/ ESR-1308

CHICAGO METALLIC TEMPRA 4000 SUSPENSION SYSTEM

CERTAINTEED ELITE NARROW STAB SUSPENSION SYSTEM

CGC- USG CENTRICITEE DXT SUSPENSION SYSTEM

CLG PANELS SHALL NOT SUPPORT ANY LIGHT FIXTURES, AIR TERMINAL OR DEVICES.

FOR CLG INSTALLATIONS UTILIZING ACOUSTICAL TILE PANELS OF MINERAL OR GLASS FIBER, IT IS NOT MANDATORY TO PROVIDE 3/4-INCH CLEARANCE BETWEEN THE ACOUSTICAL TILE PANEL AND THE WALL ON THE SIDES OF THE CLG WHICH ARE FREE TO SLIP. FOR ALL OTHER CLG PANEL TYPES, PROVIDE 3/4-INCH CLEARNACE BETWEEN THE CLG PANEL AND THE WALL ON THE SIDES OF THE CLG FREE TO SLIP.

2. MATERIALS

2.01 CLG WIRE SHALL BE CLASS 1 ZINC COATED (GALVANIZED) CARBON STEEL CONFIRMING TO ASTM A641-09A. WIRE SHALL BE #12 GA (0.106" DIAMETER) WITH SOFT TEMPER AND MIN. TENSILE STRENGTH = 70 KSI.

2.02 GALVANIZED SHEET STEEL (INCLUDING THAT USED FOR METAL STUD AND TRACK COMPRESSION STRUTS/ POST) SHALL CONFORM TO ASTM A653-11, OR OTHER EQUIVALENT SHEET STEEL LISTED IN SECTION A2.1 OF THE NORTH AMERICAN SPECIFICATION FOR THE DESIGN OF COLD-FORMED STEEL STRUCTURAL MEMBERS 2007, INCLUDING SUPPLEMENT 2 DATED 2010 (AISI S100-07/S2-10). MATERIAL 18 GAGE AND LIGHTER SHALL HAVE MINIMUM YIELD STRENGTH OF 33 KSI. MATERIAL 16 GAGE AND HEAVIER SHALL HAVE A MINIMUM YIELD STRENGTH OF 50 KSI.

2.03 ELECTRICAL METALLIC TUBE (EMT) SHALL BE ANSI C80.3/UL 797 CARBON STEEL WITH G90 GALVANIZING. EMT SHALL HAVE MINIMUM YIELD STRENGTH (FY) OF 30 KSI AND MINIMUM ULTIMATE STRENGTH (FU) OF 48 KSI.

3. ATTACHMENT OF HANGER AND BRACING WIRES:

3.01 SEPARATE ALL CLG HANGER AND BRACING WIRES AT LEAST SIX (6) INCHES FROM ALL UNBRACED DUCTS, PIPES, CONDUIT, ETC.

3.02 HANGER AND BRACING WIRES SHALL NOT ATTACH TO OR BEND AROUND OBSTRUCTIONS INCLUDING BUT NOT LIMITED TO: PIPING, DUCTWORK, CONDUIT AND EQUIPMENT.

3.03. HANGER WIRES THAT ARE MORE THAN ONE (HORIZONTAL) IN SIX (VERTICAL) OUT OF PLUMB SHALL HAVE COUNTER-SLOPING WIRES.

3.04 SLACK SAFETY WIRES SHALL BE CONSIDERED HANGER WIRES FOR INSTALLATION AND TESTING REQUIREMENTS.

3.05 HANGER AND BRACING WIRE ANCHORAGE TO THE STRUCTURE SHALL BE INSTALLED IN SUCH A MANNER THAT THE DIRECTION OF THE ANCHORAGE ALIGNS CLOSELY WITH THE DIRECTION OF THE WIRE. (E.G. BRACING WIRE CLG CLIPS MUST BE BENT AS SHOWN IN THE DETAILS AND ROTATED AS REQUIRED TO ALIGN CLOSELY WITH THE DIRECTION OF THE WIRE, SCREW EYES IN WOOD MUST BE INSTALLED SO THEY ALIGN CLOSELY WITH THE DIRECTION OF THE WIRE, ETC.)

4. FASTENERS AND WELDING:

4.01.SHEET METAL SCREWS SHALL COMPLY WITH ASTM C1513-10, ASME B18.6.4-89 (R2005). PENETRATION OF SCREWS THROUGH JOINED MATERIAL SHALL NOT BE LESS THAN THREE EXPOSED THREADS.

4.02 S.S.D. FOR EXPANSION ANCHORS AND POWER-ACTUATED FASTENERS

4.05 POWER-ACTUATED FASTENERS IN CONCRETE ARE NOT PERMITTED FOR BRACING WIRES.

4.06 CONCRETE REINFORCEMENT AND PRESTRESSING TENDONS SHALL BE LOCATED BY NON-DESTRUCTIVE MEANS PRIOR TO INSTALLING POST-INSTALLED ANCHOR.

4.07. WELDING SHALL BE IN ACCORDANCE WITH AWS D1.3 USING E60XX SERIES ELECTRODES.

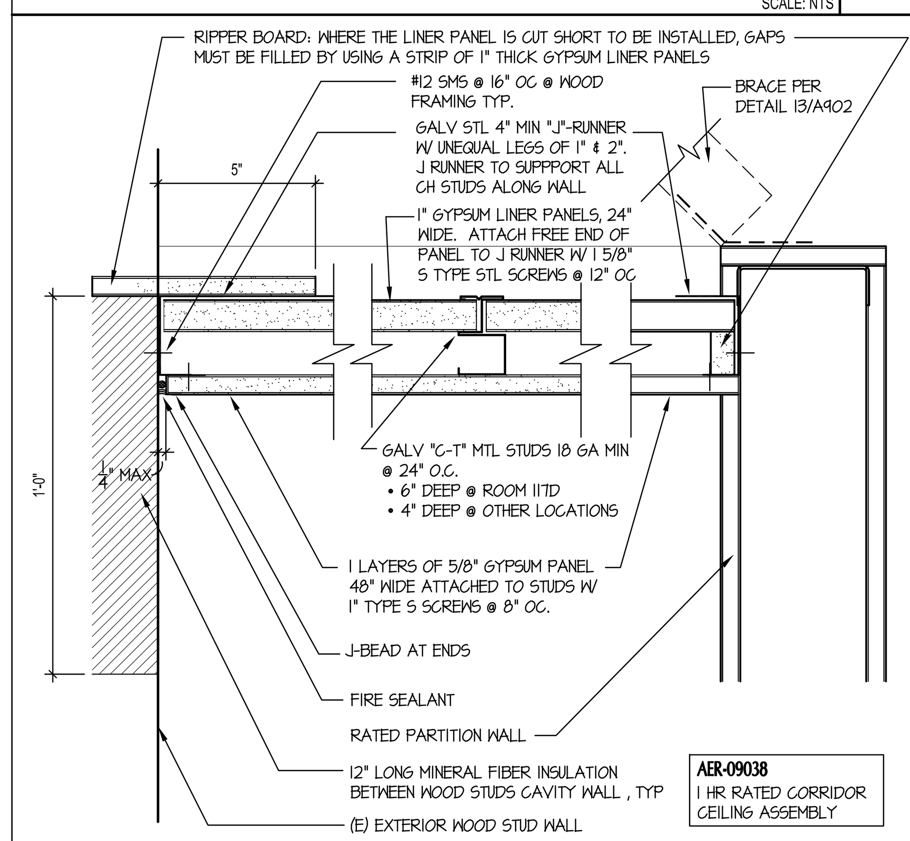

HORIZ. SHAFTWALL- FIRE RATED CLNG. ASSEMBLY — 11 — SCALE: 3" = 1'-0"

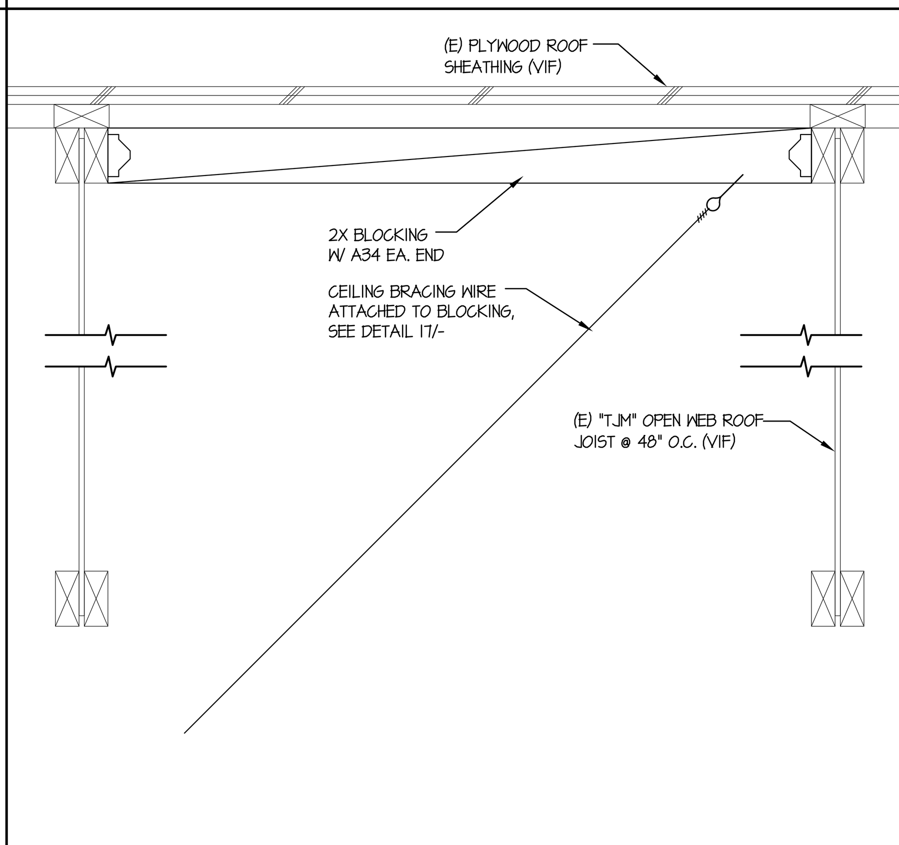

WIRE CONNECTION AT ROOF FRAMING — 12 — SCALE: 3" = 1'-0"

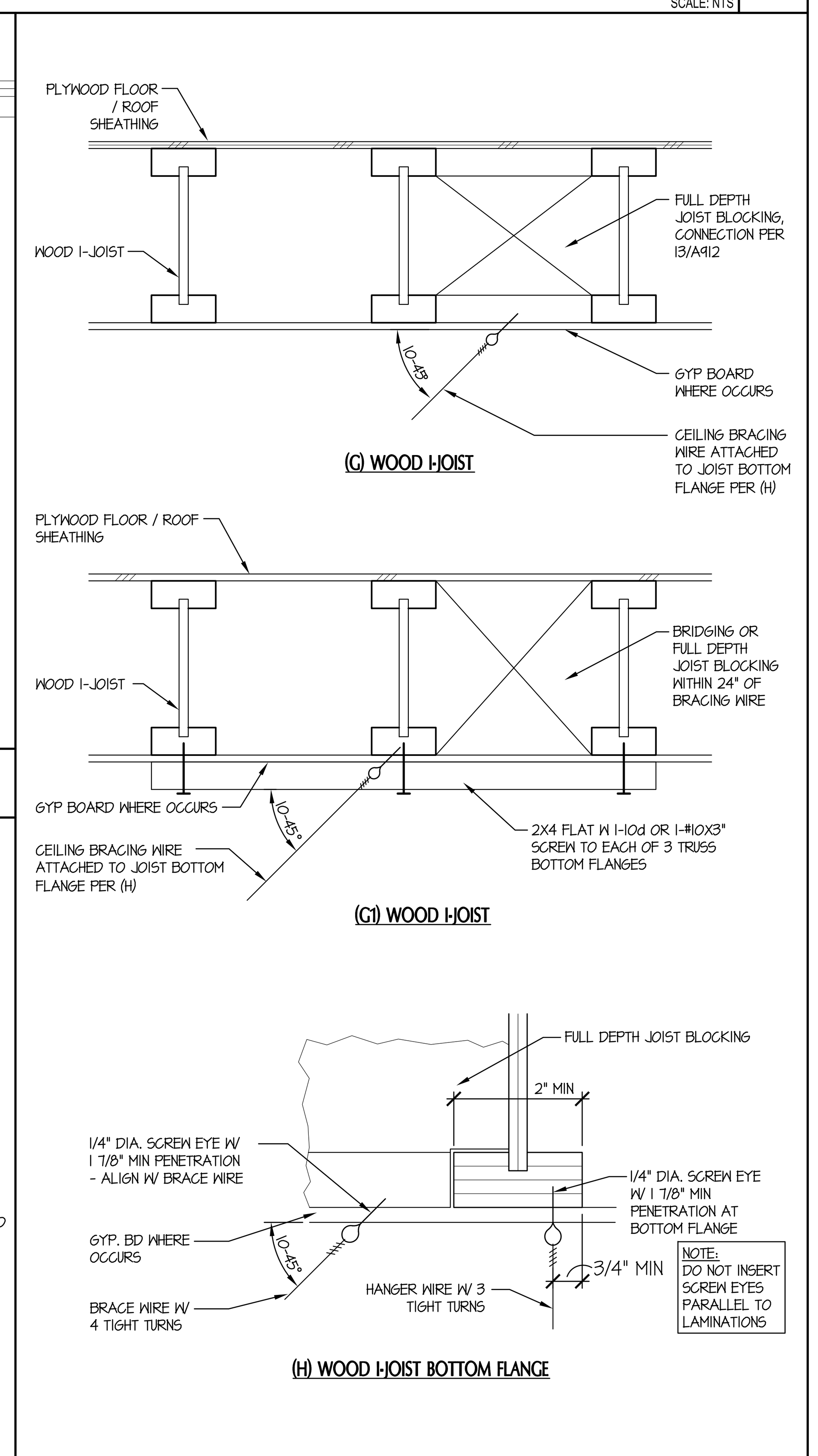

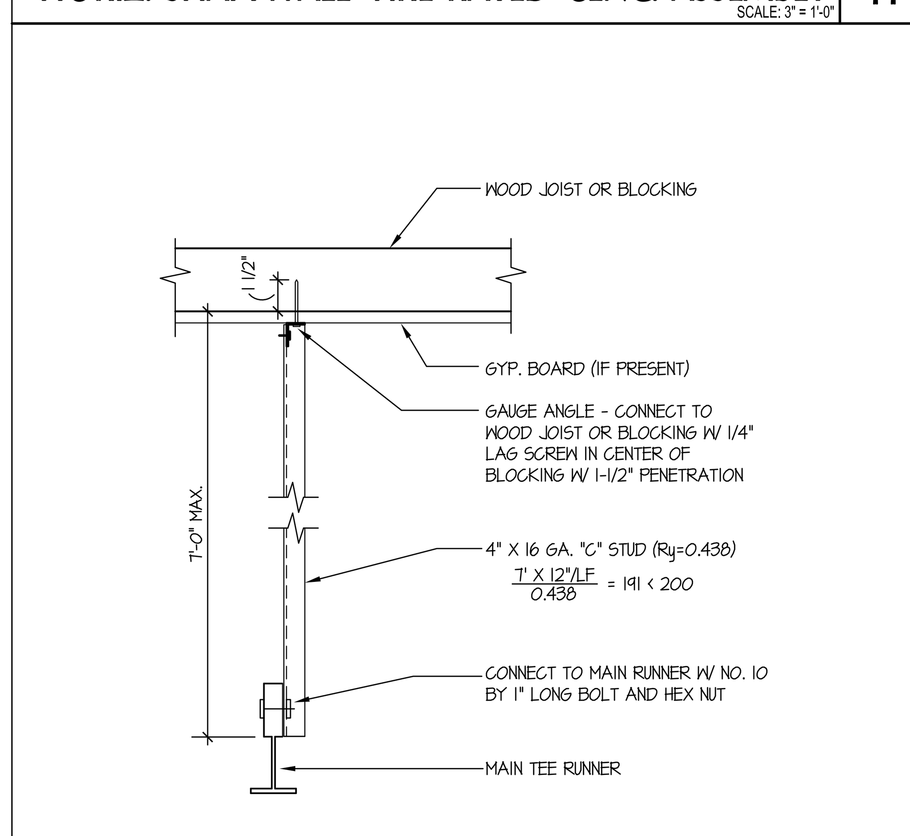

COMPRESSION STRUT — 16 — SCALE: NTS

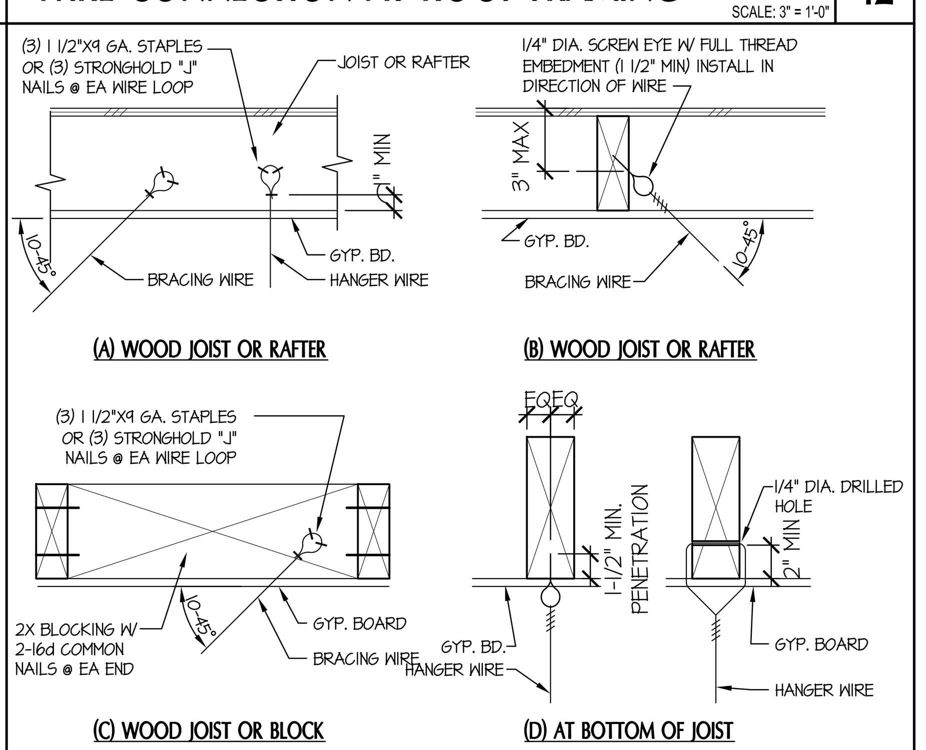

NOTE: WHERE GYP. BOARD IS INSTALLED ON THE BOTTOM FLANGES, USE SCREW EYES W/ SUFFICIENT LENGTH TO AVOID DAMAGING THE GYP. BOARD AND MEET MIN. PENETRATION. FOR ADDITIONAL WIRE CONNECTION TO WOOD FRAMING SEE DETAIL 18/-

WIRE CONNECTION TO WOOD FRAMING — 17 — SCALE: 3" = 1'-0"

NOTE: WHERE GYP. BOARD IS INSTALLED ON THE BOTTOM FLANGES, USE SCREW EYES W/ SUFFICIENT LENGTH TO AVOID DAMAGING THE GYP. BOARD AND MEET MIN. PENETRATION.

WIRE CONNECTION AT WOOD FRAMING — 18 — SCALE: 3" = 1'-0"

GENERAL NOTES: METAL SUSPENSION SYSTEMS FOR LAY-IN PANEL CEILINGS — DSA IR 25-2.13 REVISED 04-20-17 — 20

tBP architecture planning interiors

tBP/Architecture, 1777 Oakland Boulevard, Suite 320, Walnut Creek, CA 94596, ph: 925.246.6419 — architect

consultant

DIVISION OF THE STATE ARCHITECT, 1515 CLAY STREET, OAKLAND, CA 94612, ph:(510) 622-3101 — agency

C-4008 APPLIED ARTS & ADMIN RENOVATION

2600 MISSION BELL DRIVE, SAN PABLO, CA 94806

CONTRA COSTA COMMUNITY COLLEGE DISTRICT, 500 COURT STREET MARTINEZ, CA 94553 — owner

tBP project number: 20865.00

file name: A911.DWG

drawn by: DM checked by:

date: APRIL 20, 2019

rev:	date:	description:
	8/17/2017	BID SET
	04/20/2019	RECORD SET

THIS DRAWING AND THE DESIGNS, DEPICTIONS, IDEAS AND OTHER INFORMATION CONTAINED HEREIN CONSTITUTE UNPUBLISHED WORK OF tBP/ARCHITECTURE AND SHALL REMAIN PROPERTY OF tBP/ARCHITECTURE IN PERPETUITY. NO PART THEREOF SHALL BE REPRODUCED, DISCLOSED, DISTRIBUTED, SOLD, PUBLISHED OR OTHERWISE USED IN ANY WAY WITHOUT THE ADVANCED EXPRESS WRITTEN CONSENT OF tBP/ARCHITECTURE.

drawing title: CEILING DETAILS

drawing no.: A911

drawing of

Record Dwgs

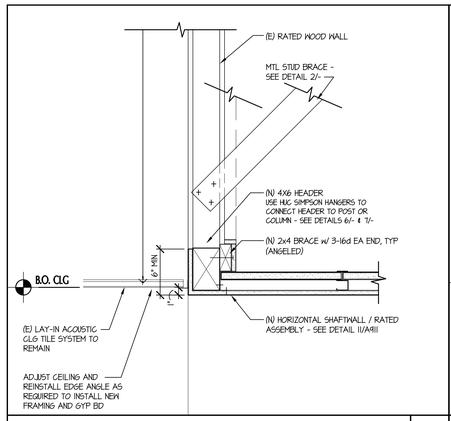

NEW SOFFIT @ (E) FRAMING SCALE: 1-1/2" = 1'-0" 1

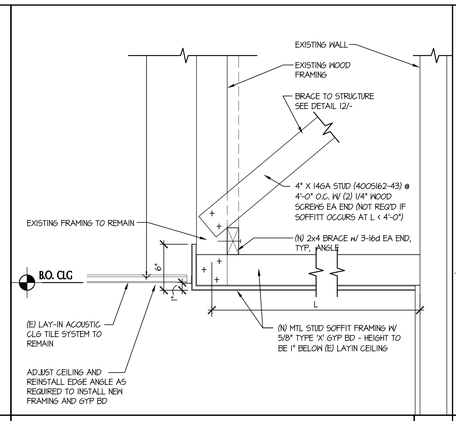

NEW SOFFIT @ (E) FRAMING SCALE: 1-1/2" = 1'-0" 2

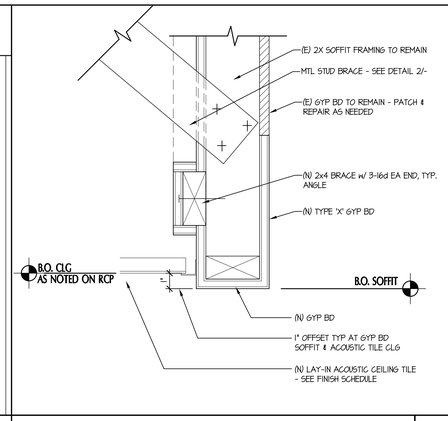

DETAIL - LAY-IN TO DRYWALL TRANSITION SCALE: 3" = 1'-0" 3

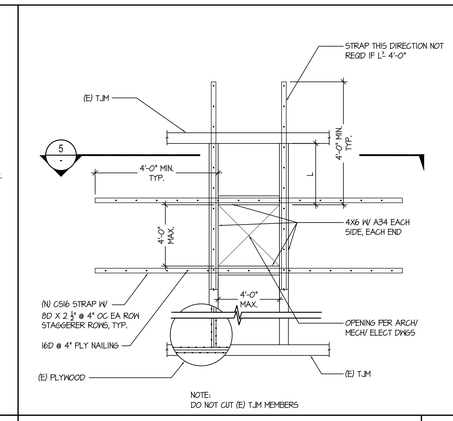

(N) OPENING IN (E) ROOF SCALE: 1/2" = 1'-0" 4

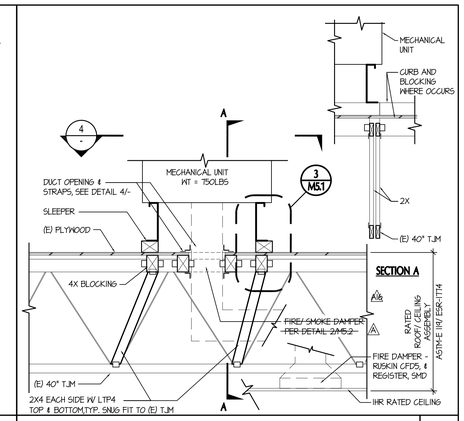

AC CURB SCALE: 1/2" = 1'-0" 5

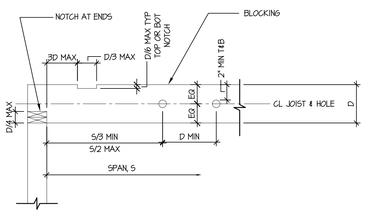

NOTE:
1. NOTCH MAY OCCURE TOP OR BOTTOM, NOT BOTH
2. D IS DEFINED AS DEPTH OF BLOCKING. S IS DEFINED AS CLEAR SPAN OF BLOCKING
3. MAXIMUM DIAMETER OF HOLE NOT TO EXCEED MINIMUM OF D/3 OR 2", WHICHEVER IS SMALLER
4. PREDRILL CORNERS OF NOTCHES
5. NO NOTCHES PERMITTED IN MIDDLE THIRD OF SPAN

HOLES & NOTCHES IN BACKING SCALE: NTS 6

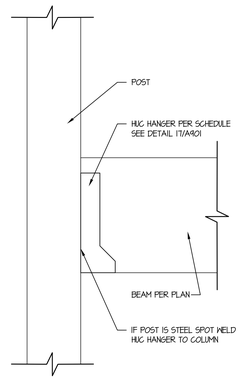

BEAM CONNECTION TO POST & HANGER SCALE: NTS 7

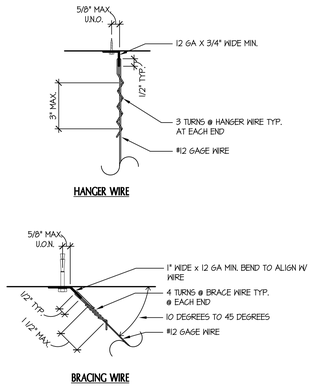

HANGER & BRACING WIRE CONNECTION TYP. SCALE: 3" = 1'-0" 8

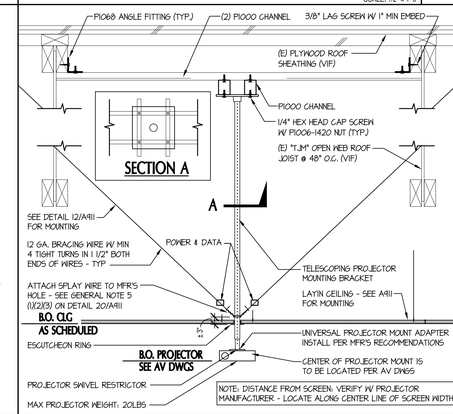

PROJECTOR MOUNTING DETAIL SCALE: N.T.S. 9

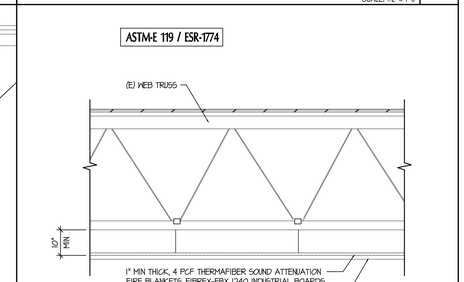

ROOF/ CEILING ASSEMBLY @ 2ND FLOOR SCALE: 1/2" = 1'-0" 10

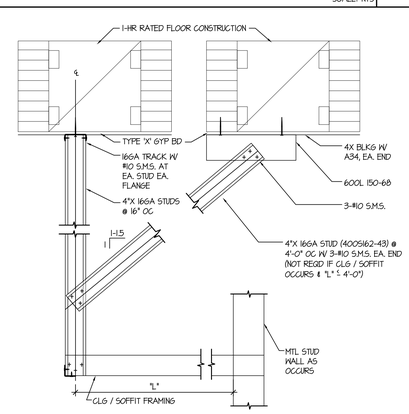

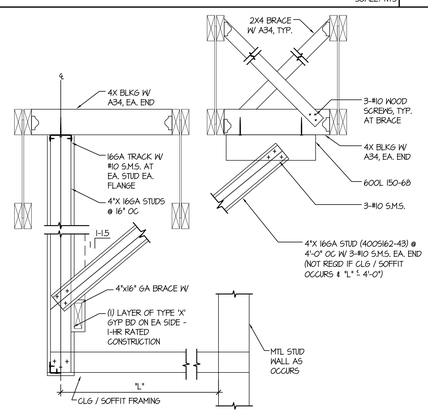

SUSPENDED STUDS TO STRUCTURE SCALE: 1" = 1'-0" 12

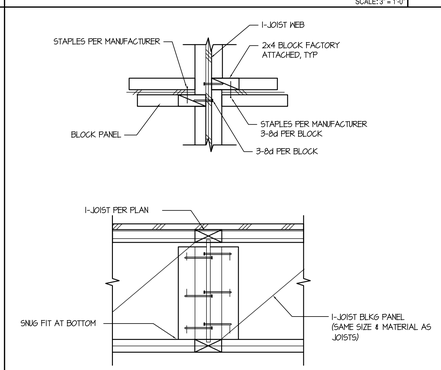

BLOCKING SCALE: NTS 13

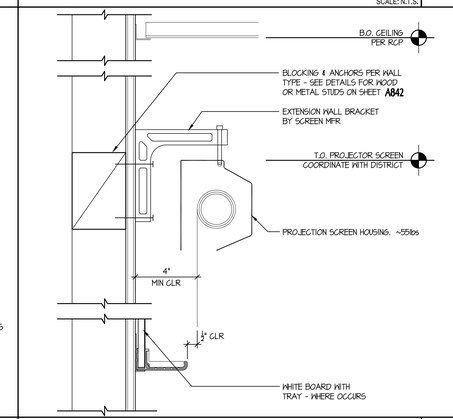

WALL MTD. PROJECTION SCREEN SCALE: N.T.S. 14

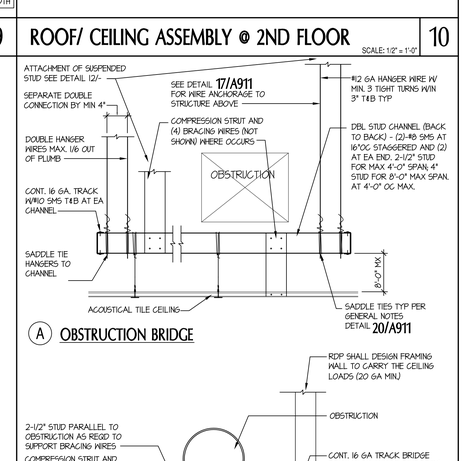

OBSTRUCTIONS FOR ACOUSTICAL CEILING SCALE: 1" = 1'-0" 20

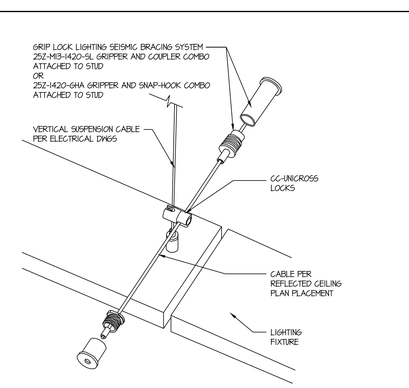

GRIPLOCK SEISMIC BRACING SCALE: 1-1/2" = 1'-0" 16

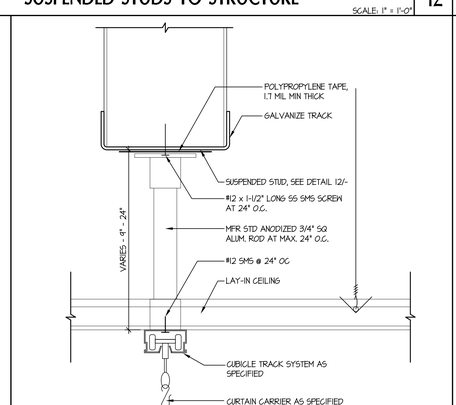

DETAIL - CURTAIN TRACK MOUNTING SCALE: HALF 17

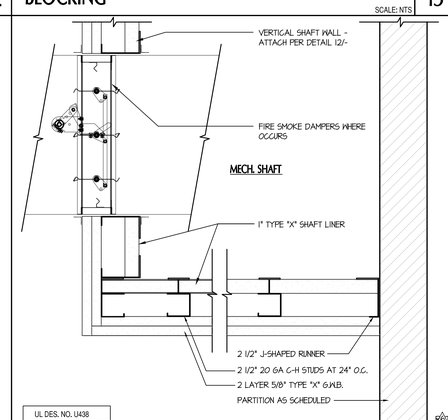

SHAFT SECTION DETAIL SCALE: N.T.S. 18

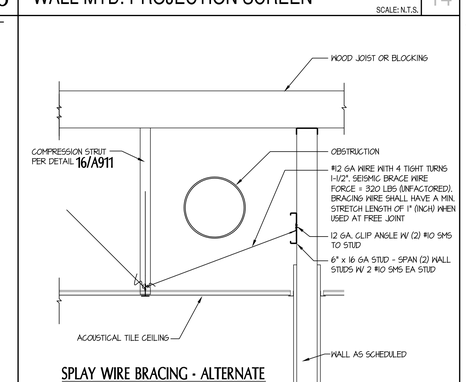

OBSTRUCTIONS FOR ACOUSTICAL CEILING SCALE: 1" = 1'-0" 19

tBP
architecture
planning
interiors

tBP/Architecture
1777 Oakland Boulevard, Suite 320
Walnut Creek, CA 94596
ph: 925.246.6419

architect

consultant

IDENTIFICATION STAMP
DIV. OF THE STATE ARCHITECT
OFFICE OF REGULATION SERVICES
APPL # 01-116617
FILE NO. 7-C1
AC FCS SS
DATE

DIVISION OF THE STATE ARCHITECT
1515 CLAY STREET
OAKLAND, CA94612
ph:(510) 622-3101

agency

C-4008 APPLIED ARTS & ADMIN RENOVATION

2600 MISSION BELL DRIVE, SAN PABLO, CA 94806

CONTRA COSTA COMMUNITY COLLEGE DISTRICT
500 COURT STREET MARTINEZ, CA 94553

owner

tBP project number: 20865.00
file name: A912.DWG
drawn by: DM
checked by:
date: APRIL 20, 2019

rev:	date:	description:
	8/17/2017	BID SET
1		
2	03/13/18	RFI 67
3	03/21/18	ASI 16
4	07/31/18	RFI 134
	04/20/2019	RECORD SET

THIS DRAWING AND THE DESIGNS, DEFINITIONS, IDEAS AND OTHER INFORMATION CONTAINED HEREIN CONSTITUTE UNPUBLISHED WORK OF tBP/ARCHITECTURE AND SHALL REMAIN PROPERTY OF tBP/ARCHITECTURE IN PERPETUITY. NO PART THEREOF SHALL BE REPRODUCED, DISCLOSED, DISTRIBUTED, SOLD, PUBLISHED OR OTHERWISE USED IN ANY WAY WITHOUT THE ADVANCED EXPRESS WRITTEN CONSENT OF tBP/ARCHITECTURE.

drawing title:
CEILING DETAILS

drawing no.:
A912
000 drawing of

Record Dwgs

SYSPENDED GYPSUM BOARD CEILING NOTES:

THESE GUIDELINES ARE ADAPTED FROM DSA IR 25-3.13 REVISED 04-08-14

1. MATERIALS
MATERIALS ARE TO COMPLY WITH CBC SECTION 2508 AND APPLICABLE ASTM STDS. GYPSUM BOARD IS EITHER 1/2" OR 5/8" IN THICKNESS. GOLD-FORMED STEEL SECTIONS SPECIFIED ARE IDENTIFIED BY A PRODUCT DESIGNATOR WHICH HAS BEEN STANDARDIZED BY AISI AND SSMA.

2. DESIGN.
THE PRESCRIPTIVE REQUIREMENTS IN THESE NOTES SHALL BE TAKEN AS THE MINIMUM REQUIREMENTS AND APPLY TO A CEILING THAT IS NOT ACCESSIBLE, HAS A SINGLE LAYER OF GYPSUM BOARD NOT EXCEEDING 5/8" THICK, AND HAS A TOTAL CEILING WEIGHT NOT TO EXCEED FOUR (4) POUNDS PER SQUARE FOOT. A CEILING THAT IS REQUIRED BY CCR TITLE 24 TO BE ACCESSIBLE OR OTHER DOES NOT MEET THESE LIMITATIONS SHALL BE DESIGNED TO MEET THE APPLICABLE REQUIREMENTS OF CBC SECTIONS 1604 AND 2508.1, AND ASCE 7-10, SECTION 13.3.1.

3. DETAILS OF CONSTRUCTION.

3.1 GENERAL: GYP BOARD CEILINGS SHOULD NOT SUPPORT BUILDING COMPONENTS OTHER THAN AIR CONDITIONING/HEATING GRILLS OR LIGHT FIXTURES. ALL SUCH COMPONENTS SHALL BE SUPPORTED EITHER DIRECTLY FROM MAIN RUNNERS, OR BY SUPPLEMENTAL FRAMING WHICH IS SUPPORTED BY MAIN RUNNERS. NO VERTICAL LOADS OTHER THAN GYP BOARD DEAD LOAD SHALL BE APPLIED TO CROSS FURRING.

3.2 VERTICAL SUPPORT SYSTEM: THERE ARE MANY POSSIBLE VARIATIONS OF MAIN RUNNER SIZES, SPACINGS, AND SPANS LISTED IN ASTM C754-04, TABLE 1. ALL OF THE COMBINATIONS ARE ACCEPTABLE, PROVIDED THE MAIN RUNNER SPACING DOES NOT EXCEED 4'-0" AND THE CEILING AREA SUPPORTED BY A HANGER WIRE DOES NOT EXCEED 16 SF.

3.2.1 MAIN RUNNER SPACING AND SPAN: THE MAIN RUNNER MOST FREQUENTLY USED IS A 1-1/2 INCH COLD ROLLER CHANNEL DESIGNATED 1500U50-54 (1-1/2" INCH COLD ROLLER CHANNELS WEIGHTING 0.414 LBS/FT) SPACED NO MORE THAN 4'-0" OC WITH A HANGER WIRE SPACING NOT TO EXCEED 4'-0"OC AND NO MORE THAN 6" FROM EACH END OF THE MAIN RUNNER.

3.2.2 VERTICAL HANGER WIRES: CEILING WIRE SHALL BE CLASS 1 ZINC COATED (GALVANIZED) CARBON STEEL CONFORMING TO ASTM A641. WIRE SHALL BE #8 GA. (0.148" DIAM) WITH SOFT TEMPER AND MIN. TENSILE STRENGTH= 70 KSI

3.2.3 CROSS FURRING: 7/8 INCH GALVANIZED STEEL HAT SECTIONS, DESIGNATED 08TF125-18, AT 24-INCHES OC MAX.

3.3 CONNECTING HANGER WIRES, STEEL FRAMING AND FURRING:
1. HANGERS SHOULD BE SADDLE-TIED AROUND MAIN RUNNERS per IR 25-2.13 SHEET 4.24
2. CROSS-FURRING SHOULD BE SADDLE-TIED TO THE MAIN RUNNERS WITH AT LEAST ONE STRAND OF #16 GAGE, OR TWO STRANDS OF #18 GAGE TIE WIRE.
3. MAIN RUNNERS SHOULD BE SPLICED BY LAPPING AND INTERLOCKING FLANGES AND INSTALLING TWO (2) #8 SCREWS AT EACH END OF SPLICE, THE LAP MUST BE A MINIMUM OF 12-INCHES LONG
4. CROSS-FURRING SHOULD BE SPLICED BY LAPPING AND INTERLOCKING THE PIECES AND ISNTALLING TWO (2) #8 SCREWS AT EACH END OF SPLICE. THE LAP MUST BE A MINIMUM OF 8-INCHES LONG.

3.4 INSTALLATION AND ANCHORAGE OF HANGER AND BRACING WIRES: FASTEN HANGER WIRES WITH NOT LESS THAN THREE (3) TIGHT TURNS WITHIN A DISTANCE OF THREE-INCHES. HANGER WIRE LOOPS SHALL BE TIGHTLY WRAPPED AND SHARPLY BENT TO PREVENT ANY VERTICAL MOVEMENT OR ROTATION OF THE MEMBER WITHIN THE LOOPS (SEE ASTM E580, SECTION 5.2.1.2). FASTEN BRACING WIRES WITH FOUR (4) TIGHT TURNS WITHIN A DISTRANCE OF 1-1/2 INCHES. HANGER AND BRACING WIRE ANCHORS SHALL BE INSTALLED IN SUCH A MANNER THAT THE DIRECTION OF THE ANCHOR ALIGNS AS CLOSELY AS POSSIBLE WITH THE DIRECTION OF THE WIRE.

3.4.1 SEPARATE ALL CEILING HANGINS AND BRACING WIRES AT LEAST SIX INCHES (6") FROM ALL UNBRACED DUCTS, PIPES, CONDUIT, ETC.

3.4.2 WHEN DRILLED-IN CONCRETE ANCHORS OR POWDER ACTUATED FASTENERS ARE USED IN REINFORCED CONCRETE FOR HANGER WIRES, 1 OUT OF 10 MUST BE FIELD TESTED FOR 200 LBS. IN TENSION. WHEN DRILLED-IN CONCRETE ANCHORS ARE USED FOR BRACING WIRES, 1 OUT OF 2 MUST BE FIELD TESTED FOR 440 LBS. IN TENSION. POWDER ACTUATED FASTENERS IN CONCRETE ARE NOT PERMITTED FOR BRACING WIRES. IF ANY SHOT-IN OR DRILLED-IN ANCHOR FAILS, SEE SECTION 1613A.1.1 OR 1613.2.1).1.4.

NOTE: DRILLED-IN ANCHORS OR POWDER ACTUATED FASTENERS EMBEDMENT DEPTH SHALL BE LIMITED IN PRESTRESSED CONCRETE TO NOT IMPINGE TENSIONED REINFORCEMENT OR SPECIAL PROCEDURES SHALL BE DEVELOPED TO LOCATE AND CLEAR TENSIONED REINFORCEMENT.

3.4.3 PROVIDE TRAPEZE OR OTHER SUPPLEMENTARY SUPPORT MEMBERS AT OBSTRUCTIONS TO TYPICAL HANGER SPACING. PROVIDE ADDITIONAL HANGERS, STRUTS OR BRACES AS REQUIRED AT ALL CEILING BREAKS, SOFFITS OR DISCONTINUOUS AREAS. HANGER WIRES THAT ARE MORE THAN 1 IN 6 OUT OF PLUMB ARE TO HAVE COUNTER SLOPING WIRES.

4. CEILING FIXTURES, TERMINALS AND DEVICES:

4.1 ALL RECESSED OR DROP-IN LIGHT FIXTURES, AS WELL AS CEILING MOUNTED MECHANICAL AIR TERMINALS AND SERVICES, SHALL BE SUPPORTED DIRECTLY BY MAIN RUNNERS OR BY SUPPLEMENTAL FRAMING WHICH IS SUPPORTED BY MAIN RUNNERS AND POSITIVELY ATTACHED WITH SCREWS OR OTHER APPROVED CONNECTORS TO RESIST A HORIZONTAL FORCE EQUAL TO THE WEIGHT OF THE COMPONENT. A MINIMUM OF TWO ATTACHMENTS ARE REQUIRED AT EACH FIXTURE AND COMPONENT.

4.2 SURFACE MOUNTED FIXTURES SHALL BE ATTACHED TO A MAIN RUNNER WITH A POSITIVE CLAMPING DEVICE MADE OF MATERIAL WITH A MINIMUM OF 14 GAGE. ROTATIONAL SPRING CLAMPS DO NOT COMPLY.

4.3 LIGHT FIXTURES, GRILLES, MECHANICAL TERMINALS, AND FLEXIBLE SPRINKLER HOSE FITTINGS OR OTHER SERVICES WEIGHING GREATER THAN 20 LBS. MUST BE INDEPENDENTLY SUPPORTED BY NOT LESS THAN TWO (2) TAUT #12 GA. WIRES WHERE LESS THAN 56 LBS., AND FOUR (4) TAUT #12 GA. WIRES WHERE GREATER THAN OR EQUAL TO 56 LBS., AND ATTACHED TO THE HOUSING AND TO THE STRUCTURE ABOVE. THE WIRES, INCLUDING THEIR ATTACHMENT TO THE STRUCTURE ABOVE, MUST BE CAPABLE OF SUPPORTING FOUR (4) TIMES THE WEIGHT OF THE UNIT.

4.4 ALL LIGHTWEIGHT MISC. DEVICES, SUCH AS STROBE LIGHTS, OCCUPANCY SENSORS, SPEAKERS, EXIT SIGNS, ETC SHALL BE ATTACHED TO THE CEILING PER SECTION 4.1. DEVICES WEIGHING MORE THAN 20 LBS. SHALL BE SUPPORTED FROM THE STRUCTURE ABOVE PER SECTION 4.3.

4.5 PENETRATIONS THRU THE CEILING FOR SPRINKLER HEADS AND OTHER SIMILAR DEVICES THAT ARE NOT INTEGRALLY TIED TO THE CLG SYSTEM IN THE LATERAL DIRECTION SHALL HAVE TWO (2) INCH OVERSIZED RING, SLEEVE OR ADAPTOR THRU THE CEILING TILE TO ALLOW FREE MOVEMENT OF ONE-INCH IN ALL HORIZONTAL DIRECTIONS. ALTERNATIVELY, PER ASTM E580, SECTION 5.2.8.5, A FLEXIBLE SPRINKLER HOSE FITTING THAT CAN ACCOMMODATE ONE-INCH OF CLG MOVEMENT SHALL BE PERMITTED TO BE USED IN LIEU OF THE OVERSIZED RING, SLEEVE OR ADAPTOR.

4.6 ACCESS PANELS: ACCESS TO THE SPACE BTWN THE CLG AND THE FLOOR OR ROOF ABOVE SHALL NOT BE ALLOWED. SMALL ACCESS PANELS FOR THE INSPECTION, ADJUSTMENT OR REPAIR OF UTILITY SWITCHES, VALVES, SENSORS ETC MAY BE ALLOWED IF THE PANEL IS LESS THAN 300 SQUARE INCHES. SUCH PANELS SHALL ALSO HAVE A PERMANENTLY ATTACHED WARNING LABEL AS FOLLOWS:

WARNING
1) DO NOT CLIMB, WALK, OR CRAWL ON THE GYPSUM BOARD CEILING PANELS OR METAL FRAMING
2) DO NOT STORE OR STOW ANYTHING ON THE GYPSUM BOARD CEILING PANELS OR METAL FRAMING

IF FIRE FIGHTER ACCESS IS REQUIRED PER CBC SECTION 1204.2 IN ATTICS OF COMBUSTIBLE CONSTRUCTION, THE PRESCRIPTIVE SUSPENDED CEILING SHALL BE FRAMED AND DESIGNED FOR SUCH LOADING.

5. LATERAL SYSTEM
A GYPSUM BOARD CEILING GREATER THAN 144 SF IN AREA SHALL BE DESIGNED TO RESIST ITS OWN SEISMIC LOADS, PER SECTION 2 ABOVE, AND SHALL NOT BE PERMITTED TO BE USED TO RESIST PRIMARY STRUCTURAL LOADS OR OTHER LOADS. THERE ARE TWO OPTIONAL LATERAL SYSTEMS FOR THIS PURPOSE:
THE BRACE WIRE SYSTEM PER SECTION 5.1, AND THE DIAPHRAGM SYSTEM PER SECTION 5.2.
EITHER OR BOTH OPTIONS MAY BE SHOWN ON PLANS OR NOTED IN THE SPECIFICATIONS.
NOTES:
1. IF BOTH OPTIONS ARE SHOWN, ONLY ONE OPTION CAN BE USED FOR EACH SEPARATE CLG AREA.
2. FIRE-RATED SYSTEMS SHALL BE INSTALLED PER RATED LISTING (IE UL, FM ETC.) AND MFR INSTRUCTION, AND THE RATED LISTING MAY DICTATE THE OPTION LATERAL SYSTEM USED.

5.1 BRACE WIRE SYSTEM: LATERAL FORCE BRACING ASSEMBLIES SHALL CONSIST OF A COMPRESSION STRUT AND FOUR (4) #12 GA. SPLAYED BRACING WIRES ORIENTED 90-DEGRESS FROM EACH OTHER (SEE DETAIL 8 THIS SHEET). LATERAL FORCE BRACING ASSEMBLIES SHALL BE SPACED PER TABLE BELOW FOR ALL VALUES OF THE COMPONENT IMPORTANCE FACTOR (Ip) OF THE CEILING.

DESIGN SPECTRAL ACCELERATION PARAMETER Sps	BRACE ASSEMBLY SPACING
LESS THAN OR EQUAL TO 1.15	12'X12' FULL BUILDING HEIGHT
GREATER THAN 1.15 AND LESS THAN OR EQUAL TO 1.73	8'X12' FOR z/h GREATER THAN 0.5 12'X12' FOR z/h LESS THAN OR EQUAL TO 0.5
GREATER THAN 1.73	8'X8' FOR z/h GREATER THAN 0.5 8'X12' FOR z/h LESS THAN OR EQUAL TO 0.5

WHERE, AS DEFINED IN ASCE 7-10, SECTION 13.3.1:
z = HEIGHT IN STRUCTURE OF PT OF ATTACHMENT OF CLG WITH RESPECT TO THE BASE
h = AVG. ROOF HEIGHT OF THE STRUCTURE WITH RESPECT TO THE BASE
WHERE DIFFERENT BRACE SPACING IS SPECIFIED AT CARIOUS STORIES, THE RESPECTIVE CLG PLAN SHALL CLEARLY INDICATE THE BRACE SPACING.

5.1.1 THERE SHALL BE A BRACE ASSEMBLY A DISTANCE OF NOT MORE THAN ON HALF OF THE ABOVE SPACING FROM EACH SURROUNDING WALL, EXPANSION JOINT AND AT THE EDGE OF ANY CEILING VERTICAL OFFSET. FOR EXAMPLE, WHERE THE BRACE SPACING IS 8'X12', THE DISTANCE SHALL BE 4-FEET IN THE DIRECTION OF THE 4-FOOT SPACING AND 6-FEET IN THE DIRECTION OF THE 12-FOOT SPACING.

5.1.2 THE SLOPE OF BRACING WIRES SHALL NOT EXCEED 45-DEGREES FROM THE PLANE OF THE CEILING AND SHALL BE TAUT. SPLICES IN BRACING WIRES ARE NOT TO BE PERMITTED WITHOUT DSA APPROVAL.

5.1.3 CEILING GRID MEMBERS MAY BE ATTACHED TO NOT MORE THAN TWO (2) ADJACENT WALLS. CEILING GRID MEMBERS SHALL BE AT LEAST 1-INCH FREE OF OTHER WALLS. IF WALLS RUN DIAGONAL TO CEILING GRID SYSTEM RUNNER, ONE END OF MAIN AND CROSS RUNNERS SHOULD BE FREE, AND A MINIMUM 1-INCH CLEAR OF WALL

5.1.4 SUSPENDED CLG SYSTEMS WITH AN AREA OF 144 SF OR LESS, SURROUNDED BY WALLS WHICH CONNECT DIRECTLY TO THE STRUCTURE ABOVE DO NOT REQUIRE BRACING ASSEMBLIES WHEN ATTACHED TO AT LEAST TWO ADJCENT WALLS AND THE PERIMETER WALLS ARE DESIGN TO CARRY THE CLG LATERAL FORCES

5.2 DIAPHRAGM SYSTEM: A SUSPENDED GYPSUM BOARD CEILING MAY BE DESIGNED AS A HORIZONTAL DIAPHRAGM TO RESIST ITS OWN SEISMIC LOADS AS PRESCRIBED IN THIS SECTION. GYPSUM BOARD SHALL NOT BE USED IN DIAPHRAGM CEILINGS TO RESIST LATERAL FORCES IMPOSED BY PARTITIONS.

5.2.1 DIAPHRAGM RATIOS: HORIZONTAL 2:1 MAXIMUM
VERTICAL 1:1 MAXIMUM

5.2.2 A MAXIMUM DIAPHRAGM SHEAR EQUAL TO 50 LBS./FT. IS ALLOWED WITH 1-INCH OR 1-1/4 INCH HI-LO TYPE S OR S-12 BUGLE HEAD SCREWS AT 12" O.C. ALL GYPSUM BOARD EDGES (8/8 INCH SCREW EDGE DISTANCE) AND AT ALL INTERMEDIATE SUPPORTS. A WALL CONSTRUCTED SIMILARLY CAN RESIST THE SAME SHEAR FORCE PROVIDED THE GYPSUM BOARD IS ON THE SAME SIDE OF THE STUDS AS THE CEILING IS, AND A POSITIVE CONNECTION BETWEEN THE CEILING AND THE WALL IS DETAILED. THE GYPSUM BOARD DIAPHRAGMS ARE TO RESIST LATERAL LOADS DUE TO THEIR OWN WEIGHT AND/OR THE CEILING DIAPHRAGM(S) ONLY.

5.2.3 DETAILS ARE REQUIRED PROVIDING FOR LATERAL LOAD TRANSFER FROM THE GYPSUM BOARD TO SHEAR WALLS, OR OTHER LATERAL LOAD RESISTING ELEMENTS, ON ALL FOUR SIDES OF THE DIAPHRAGM. THERE SHALL BE NO STEPS OR VERTICAL OFFSETS IN THE CEILING PLANE.

6. DSA ACCEPTANCE OF EVALUATION REPORTS: AT THE DISCRETION OF THE DSA, PROPRIETARY SYSTEMS MAY BE ACCEPTED UNDER THE FOLLOWING CONDITIONS:
ACCEPTANCE WILL BE GRANTED ON A PROJECT SPECIFIC BASIS
PROPRIETARY SYSTEMS MUST MEET THE REQUIREMENTS OF THE CBC
PROPRIETARY SYSTEM MUST HAVE VALID EVALUATION REPORTS MEETING THE PROVISIONS OF DSA IR A-5
IN ACCORDANCE WITH DSA IR A-5, DSA WILL ACCEPT OSHPD PREAPPROVED DETAILS (OPD) "2013 CBC STANDARD GYPSUM BOARD DETAILS FOR SUSPENDED AND JOIST FRAMING CONSTRUCTION".

SUSPENDED GYPSUM BOARD CEILING NOTES SCALE: NTS 16

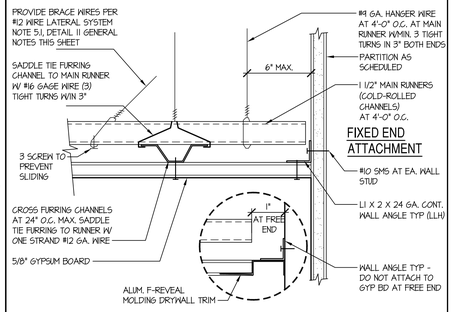

FREE END ATTACHMENT

NOTES:
1. SEE GENERAL NOTES AT DETAIL **16/-** FOR ADDITIONAL INFORMATION.
2. PROVIDE FIXED END ATTACHMENT AT NOT MORE THAN TWO ADJACENT WALLS PER ROOM, WITH FREE END ATTACHMENT AT ALL OPPOSITE WALLS.
3. SEE DETAIL 8/- FOR ADDITIONAL INFORMATION

SUSPENDED GYPSUM BOARD CEILING SCALE: N.T.S. 2

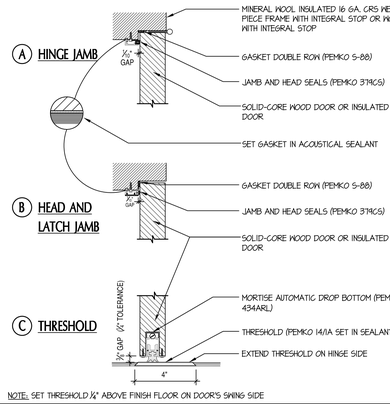

NOTE: SET THRESHOLD 1/2" ABOVE FINISH FLOOR ON DOOR'S SWING SIDE

DETAIL - SOUND GASKETED DOOR SCALE: 3" = 1'-0" 3

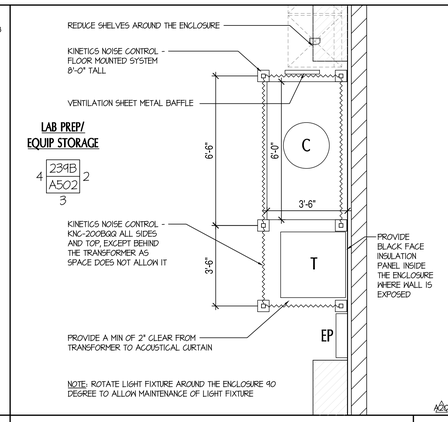

NOTE: ROTATE LIGHT FIXTURE AROUND THE ENCLOSURE 90 DEGREE TO ALLOW MAINTENANCE OF LIGHT FIXTURE

SOUND ENCLOSURE SCALE: 3/8" = 1'-0" 4

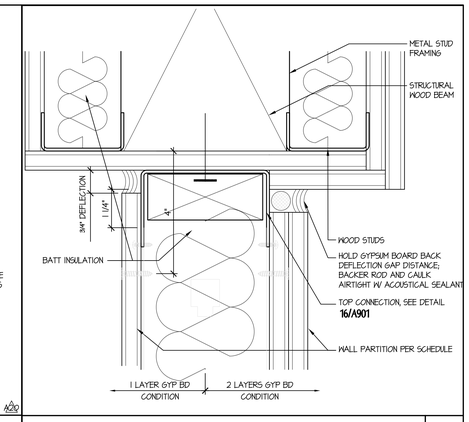

DETAIL - SOUND RATED HEAD DETAIL AT BEAMS SCALE: HALF 5

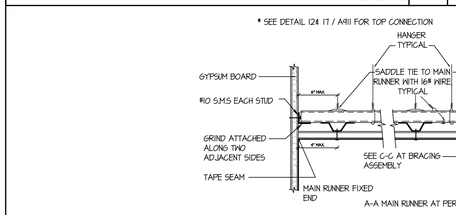

A-A MAIN RUNNER AT PERIMETER

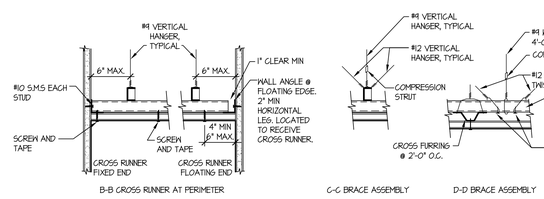

B-B CROSS RUNNER AT PERIMETER C-C BRACE ASSEMBLY D-D BRACE ASSEMBLY

SUSPENDED GYPSUM BOARD CEILING SCALE: HALF 8

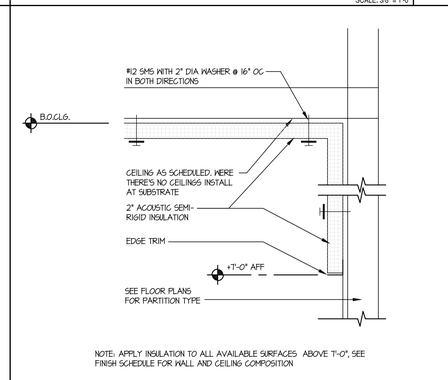

NOTE: APPLY INSULATION TO ALL AVAILABLE SURFACES ABOVE T'-0", SEE FINISH SCHEDULE FOR WALL AND CEILING COMPOSITION

DETAIL - BLACK-FACED INSUL. PANEL INSTALLATION SCALE: NTS 9

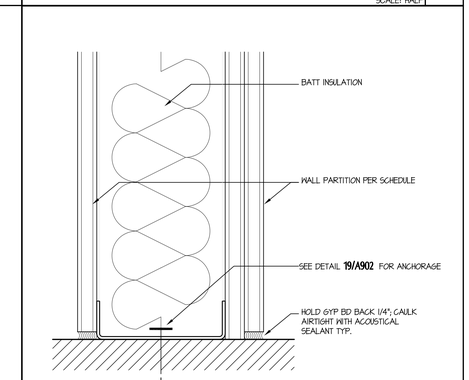

SOUND RATED BASE DETAIL SCALE: HALF 10

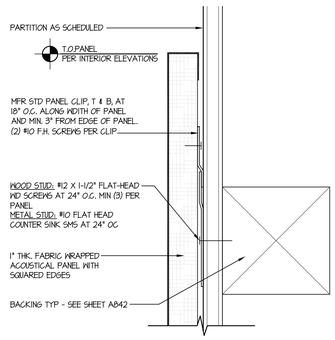

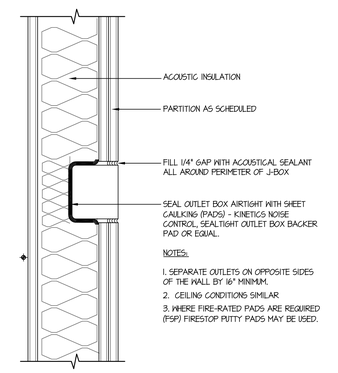

DETAIL - TYP. ELEC. DEVICES IN SR WALLS SCALE: NTS 13

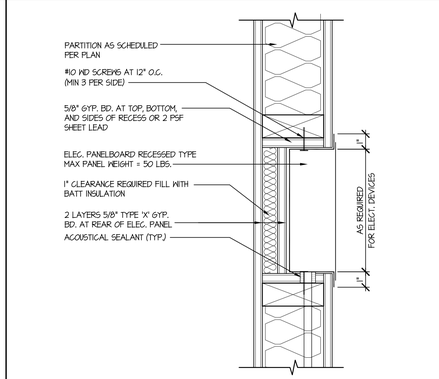

FOR NON-FIRE BARRIER CONDITIONS

DETAIL - RECESSED PANELS AND FIXTURES AT ACOUSTICAL WALL SCALE: NTS 14

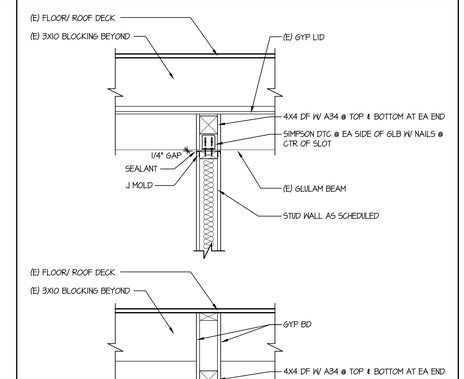

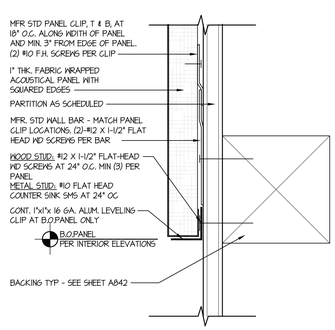

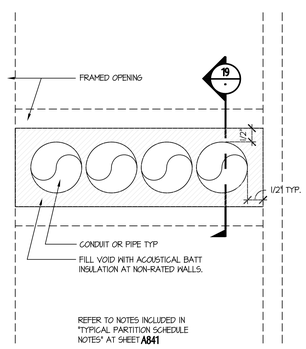

ACOUSTIC PENETRATION DETAIL - ELEV VIEW SCALE: N.T.S. 18

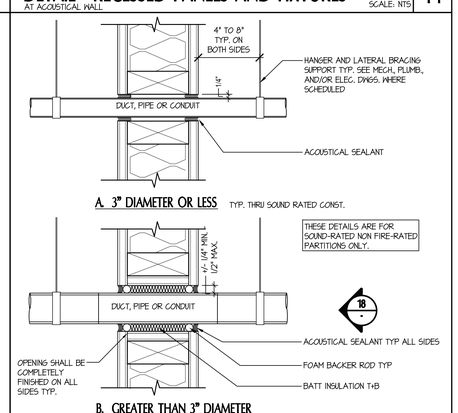

DETAIL - TYP. ACOUS PENETRATION SCALE: NTS 19

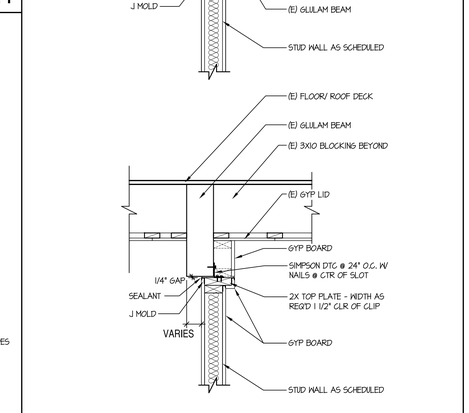

SOUND RATED PARTITIONS HEAD DETAIL SCALE: 1" = 1'-0" 20

tBP
architecture planning interiors
tBP/Architecture
1777 Oakland Boulevard, Suite 320
Walnut Creek, CA 94596
ph: 925.268.6419
architect

consultant

IDENTIFICATION STAMP
DIV. OF THE STATE ARCHITECT
OFFICE OF REGULATION SERVICES
APPL # 01-116617
FILE NO. 7-C1
AC ___ KS ___ SS ___
DATE

DIVISION OF THE STATE ARCHITECT
1515 CLAY STREET
OAKLAND, CA94612
ph:(510) 622-3101

agency

C-4008 APPLIED ARTS & ADMIN RENOVATION

2600 MISSION BELL DRIVE, SAN PABLO, CA 94806

CONTRA COSTA COMMUNITY COLLEGE DISTRICT
500 COURT STREET MARTINEZ, CA 94553

owner

tBP project number: 20865.00
file name: A421.DWG
drawn by: DM checked by:
date: APRIL 20, 2019

rev:	date:	description:
	8/17/2017	BID SET
1	06/04/18	ASI 20
	04/20/2019	RECORD SET

THIS DRAWING AND THE DESIGN, INFORMATION, IDEAS AND OTHER INFORMATION CONTAINED HEREIN CONSTITUTE UNPUBLISHED WORK OF tBP/ARCHITECTURE AND SHALL REMAIN PROPERTY OF tBP/ARCHITECTURE IN PERPETUITY. NO PART THEREOF SHALL BE REPRODUCED, DESCRIBED, DISTRIBUTED, SOLD, PUBLISHED OR OTHERWISE USED IN ANY WAY WITHOUT THE ADVANCED EXPRESS WRITTEN CONSENT OF tBP/ARCHITECTURE.

drawing title:
ACOUSTICAL DETAILS

drawing no.:
A921

000 drawing of

Record Dwgs

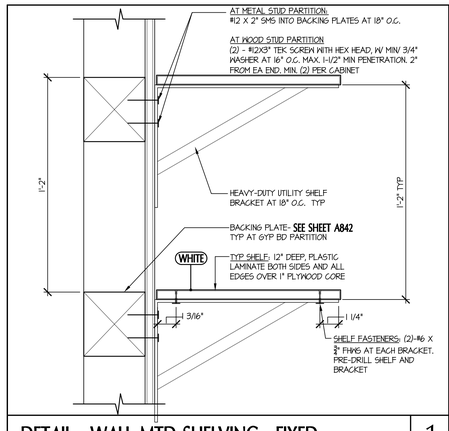

DETAIL - WALL MTD SHELVING - FIXED SCALE: 3" = 1'-0" 1

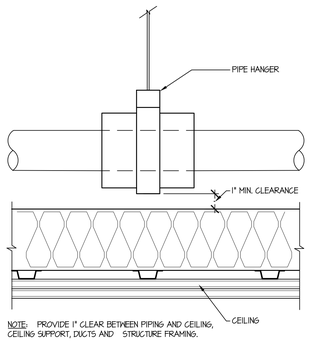

DETAIL - TYP HORIZONTAL PIPE RUN SCALE: NTS 2

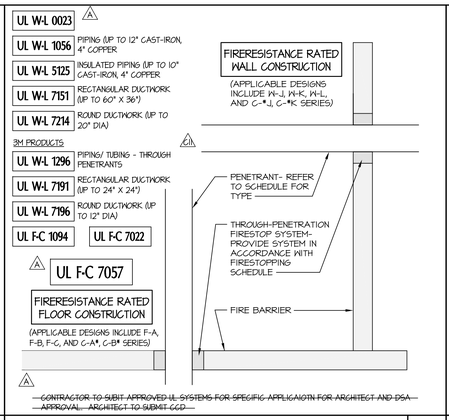

THROUGH-PENETRATION FIRESTOP SYS KEY SCALE: NTS 3

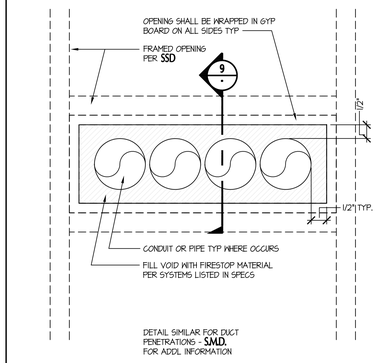

DETAIL - FIRE-RATED PENETRATION - ELEV VIEW SCALE: N.T.S. 4

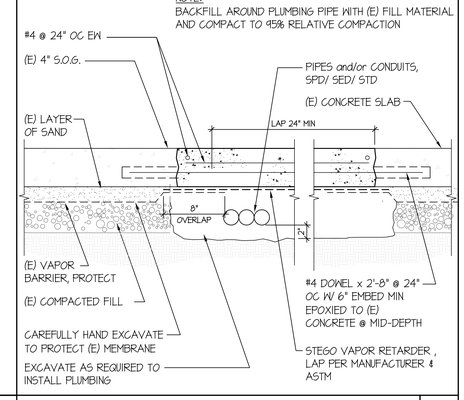

CONCRETE INFILL @ (E) CONCRETE SLAB SCALE: N.T.S. 5

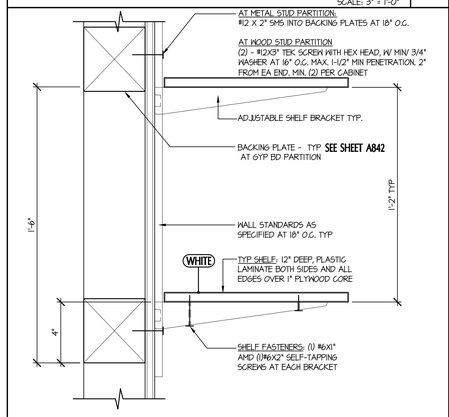

DETAIL - WALL MTD SHELVING - ADJUSTABLE SCALE: 3" = 1'-0" 6

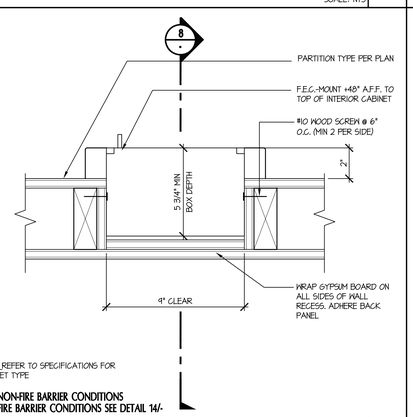

DETAIL PLAN - TYP. FIRE EXTINGUISHER CABINET SCALE: 3" = 1'-0" 7

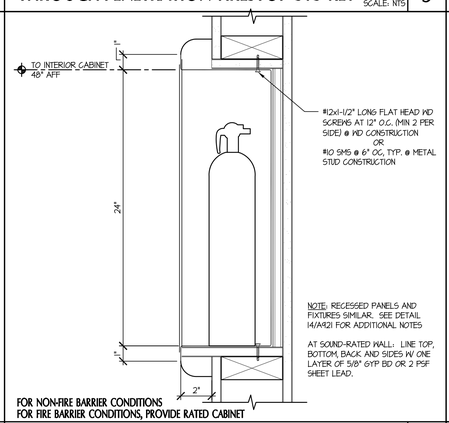

DETAIL - FIRE EXT. CABINET SCALE: 3" = 1'-0" 8

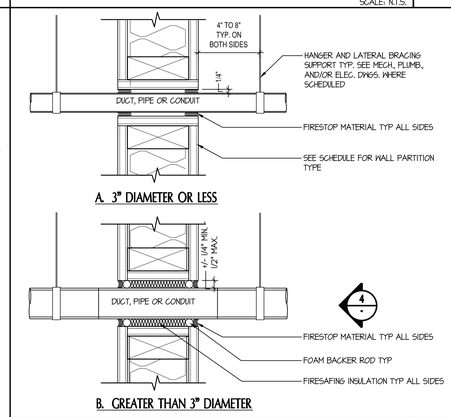

DETAIL - TYP. FIRESTOP PENETRATION SCALE: NTS 9

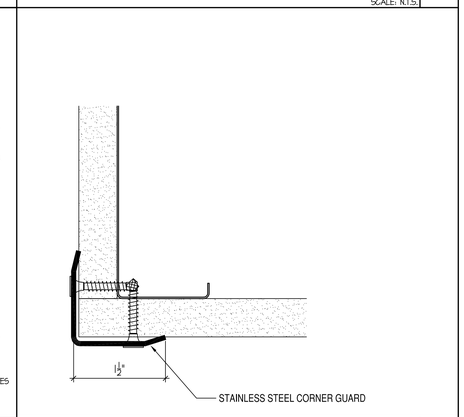

CORNER GUARDS SCALE: N.T.S. 10

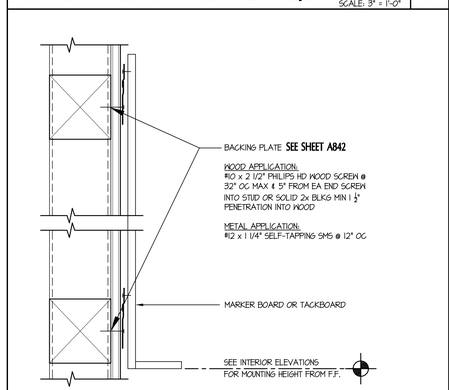

DETAIL - MARKER/TACK BOARD MOUNTING SCALE: NTS 11

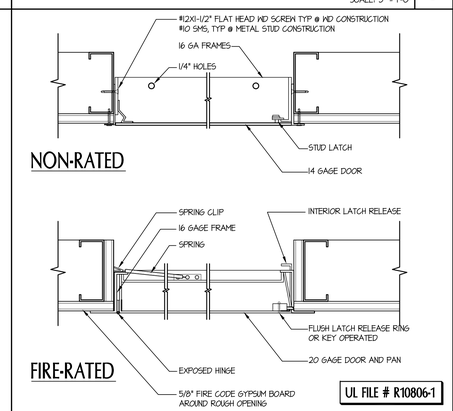

DETAIL - TYP. ACCESS DOOR SCALE: NTS 13

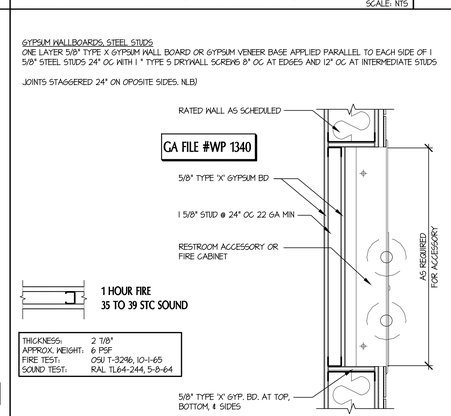

DETAIL - ACCESSORY AT RATED WALL SCALE: NTS 14

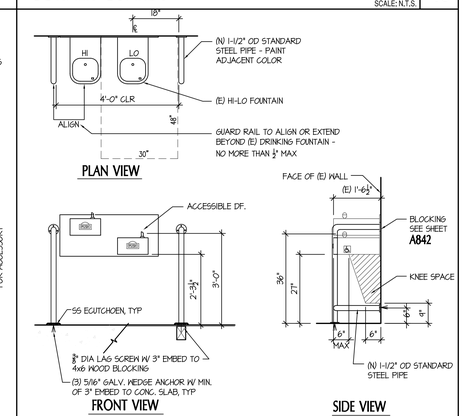

DETAIL - DRINKING FOUNTAIN WING WALL/RAIL SCALE: 1/2" = 1'-0" 15

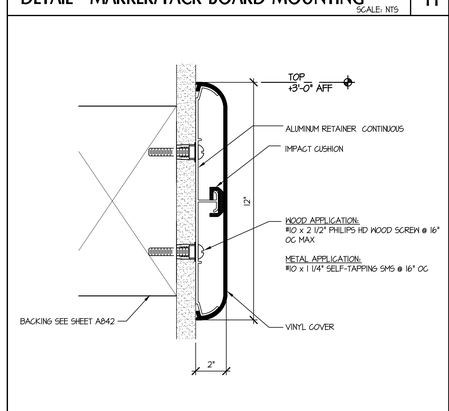

WALL GUARD SCALE: NTS 16

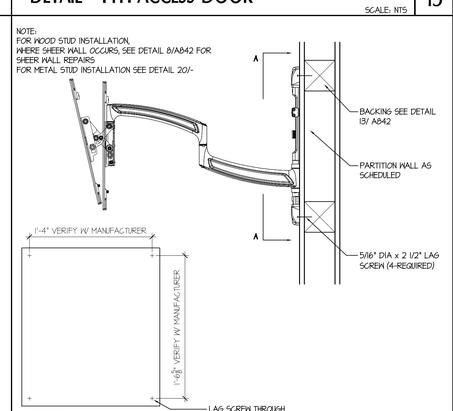

FLAT PANEL MONITOR MOUNT SCALE: 1 1/2" 1'-0" 18

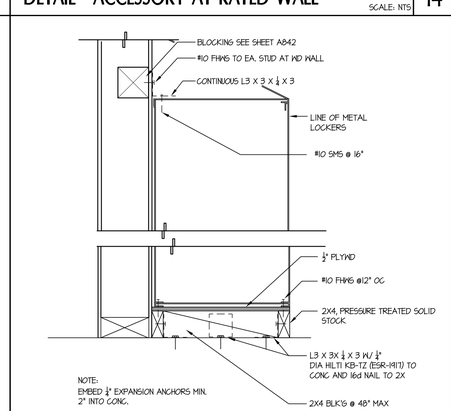

LOCKERS SCALE: 1-1/2" = 1'-0" 19

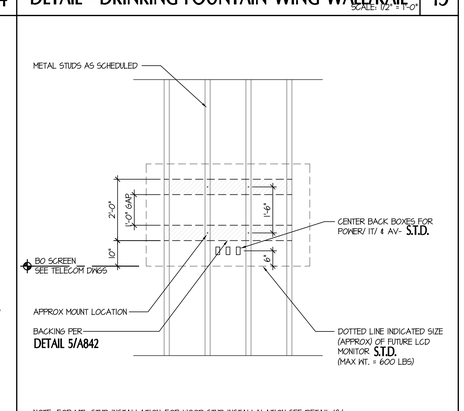

DETAIL - WALL MTD MONITOR BACKING SCALE: 1/2" = 1'-0" 20

tBP
architecture
planning
interiors

tBP/Architecture
1777 Oakland Boulevard, Suite 320
Walnut Creek, CA 94596
ph: 925.256.8419

architect

consultant

IDENTIFICATION STAMP
DIV. OF THE STATE ARCHITECT
OFFICE OF REGULATION SERVICES
APPL # 01-110617
FILE NO. 7-C1
AC ___ FLS ___ SS ___
DATE

DIVISION OF THE STATE ARCHITECT
1515 CLAY STREET
OAKLAND, CA94612
ph:(510) 622-3101

agency

C-4008 APPLIED ARTS & ADMIN RENOVATION

2600 MISSION BELL DRIVE, SAN PABLO, CA 94806

CONTRA COSTA COMMUNITY COLLEGE DISTRICT
500 COURT STREET MARTINEZ, CA 94553

owner

tBP project number: 20865.00
file name: A941.DWG
drawn by: DM checked by:
date: APRIL 20, 2019

rev:	date:	description:
	8/17/2017	BID SET
1	04/21/17	ADDENDUM A
2	07/10/18	CCD 11
	04/20/2019	RECORD SET

THIS DRAWING AND THE DESIGNS, CONCEPTIONS, IDEAS AND OTHER INFORMATION CONTAINED HEREIN CONSTITUTE UNPUBLISHED WORK OF tBP/ARCHITECTURE AND SHALL REMAIN PROPERTY OF tBP/ARCHITECTURE IN PERPETUITY. NO PART THEREOF SHALL BE REPRODUCED, DISCLOSED, DISTRIBUTED, SOLD, PUBLISHED OR OTHERWISE USED IN ANY WAY WITHOUT THE ADVANCED EXPRESS WRITTEN CONSENT OF tBP/ARCHITECTURE.

drawing title:
INTERIOR DETAILS

drawing no.:
A941

000 drawing of

Record Dwgs

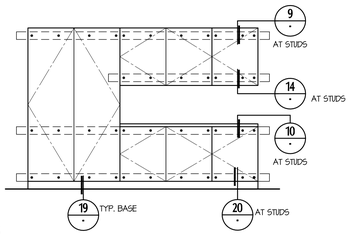

NOTES

1. SEE INTERIOR ELEVATIONS AND FLOOR PLANS FOR CABINET CONFIGURATION AND DIMENSIONS.
2. STUDS OF WALLS BACKING CABINETS SHALL RUN FROM SLAB TO STRUCTURE ABOVE.
3. CABINETS SHALL BE FASTENERED TOGETHER WITH #12X2 COMBO-RWH 1-1/4"SCREWS. SCREW LOCATIONS ARE AT THE FRONT OF CABINET ENDS.
4. ANCHORS AT STUDS:
   WOOD STUDS: MIN. #12 TEK SCREWS AT 16" O.C. SPACING, MINIMUM OF ONE SCREW AT EACH TOP AND BOTTOM CORNER OF EACH CABINET UNIT.
   METAL STUDS: USE #14 SMS @ 12" O.C.
5. FOR WALL HUNG BACKING SEE SHEET A842

TYP. CABINET BACKING /ANCHORAGE NOTES SCALE: NTS 2

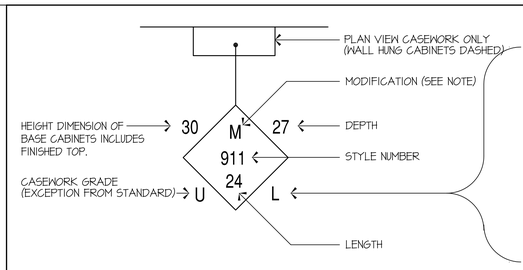

SYMBOL NOTATIONS

C - CHALKBOARD ON BACK
CD - CHALKBOARD ON DOOR
ML - METAL LEGS TO REPLACE CASTERS
WL - WOODEN LEGS TO REPLACE CASTERS
G - GLIDES TO REPLACE CASTERS
L - LOCKS REQUIRED AT ALL DOORS AND/OR DRAWERS IN CABINETS
M - MODIFICATION TO STYLE ONLY
RS - REVERSE SWING OF DOOR FROM THAT SHOWN ON DETAIL SHEETS
T - TACKBOARD ON BACK
TD - TACKBOARD ON DOOR
X - IN LIEU OF STYLE NO. INDICATES SPECIAL DESIGN NOT ILLUSTRATED ON DETAIL SHEETS
T - SUFFIX ON 100 AND 200 SERIES CONVERTS BASE UNITS TO MOVEABLE UNITS

CASEWORK GRADES

D - DELUXE (TYPICAL GRADE UNLESS NOTE OTHERWISE)
U - UTILITY
S - SUPREME
LAB - LABORATORY
P - PREMIUM
C - CUSTOM

COUNTERTOP NOTATIONS

LAM. PLAS. - LAMINATED PLASTIC
HD. BD. - HARDBOARD
HDWD. - HARDWOOD
CST - COMPOSITION STONE
LAB. GRADE - ACID-RESISTANT LAMINATED PLASTIC
EP. RES. - EPOXY RESIN

SYMBOLS AND NOTATIONS FOR CABINETS SCALE: NONE 4

A. CASEWORK

1. ONLY THOSE CABINETS CALLED OUT ON BUILDING INTERIOR ELEVATIONS AND FLOOR PLANS SHALL BE PROVIDED.
2. DOOR SWINGS SHALL BE AS SHOWN ON INTERIOR ELEVATIONS. IF NOT ELEVATED, SWINGS SHALL BE AS SHOWN ON DETAIL SHEET ILLUSTRATIONS. SYMBOL 'RS' INDICATES REVERSE SWING.
3. ALL CABINET DIMENSIONS INDICATED ARE NOMINAL OUTSIDE DIMENSIONS, AND SHALL NOT BE EXCEEDED; (EXCEPTION - CABINETS ADJACENT TO WALLS MAY BE INCREASED IN LENGTH TO ELIMINATE THE NEED FOR FILLER STRIPS). ANY TOLERANCE IS PERMITTED ON DIMENSIONS OVER 48". FOR 48" AND SMALLER DIMENSIONS, TOLERANCE IS LIMITED TO 1/8&. HEIGHT DIMENSION OF BASE CABINETS INCLUDES FINISHED TOP.
4. FOR BACKING IN WOOD WALL OR METAL STUD WALL SEE SHEET A842
5. ALIGN SIDE OF CABINET WITH EDGE OF DOOR FRAME WHERE OCCURS.
6. PAPER AND CHART STORAGE UNITS SHALL BE 27" DEEP UNLESS OTHERWISE NOTED.

B. COUNTERTOPS AND BACKSPLASHES

1. WHERE BACKSPLASH IS INDICATED, IT SHALL BE 4" HIGH AT NON-SINK AREAS AND 6" HIGH OR TO UNDERSIDE OF UPPER CABINETS AT WET AREAS (SEE INTERIOR ELEVATIONS). TOP MOUNTED TYPE, HAVING SQUARE TOP WITH SHELF EDGE.
2. PROVIDE MIN. 1 GROMMET IN COUNTERTOP AT EACH WORK STATION, U.O.N.
3. NA
4. SEE INTERIOR ELEVATIONS FOR COUNTER AND WORK SURFACE HEIGHTS.

C. ACCESSIBILITY REQUIREMENTS

1. MAINTAIN MIN. 27-INCHES CLEAR AFF BELOW COUNTER OR WORK SURFACE AT STATIONS NOTED AS ACCESSIBLE
2. T.O. COUNTER MAX. 34-INCHES AFF.

GENERAL NOTES 5

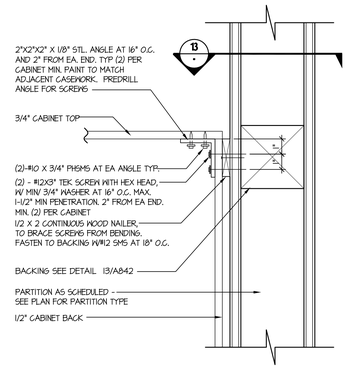

DETAIL - TYP T.O. WALL CABINET ATTACHMENT SCALE: 3" = 1'-0" 9

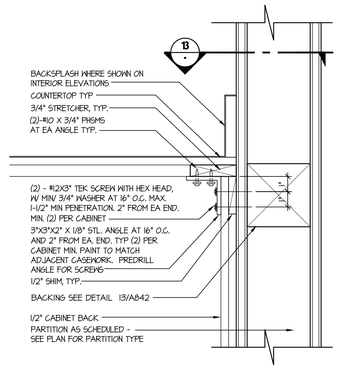

DETAIL - TYP. T.O. BASE CABINET ATTACHMENT SCALE: 3" = 1'-0" 10

NOTES

1. FAUCET CONTROLS AND OPERATING MECHANISMS SHALL BE OPERABLE WITH ONE HAND AND SHALL NOT REQUIRE TIGHT GRASPING, PINCHING OR TWISTING OF THE WRIST.
   - THE FORCE REQUIRED TO ACTIVATE CONTROLS SHALL BE NO MORE THAN 5 LBS.
   - LEVER OPERATED, PUSH TYPE AND ELECTRONICALLY CONTROLLED MECHANISMS ARE ACCEPTABLE.
   - SELF CLOSING VALVES ARE ALLOWED IF THE FAUCET REMAINS OPEN FOR AT LEAST 10 SECONDS.
2. DO NOT INSTALL DOORS UNDER THE SINK

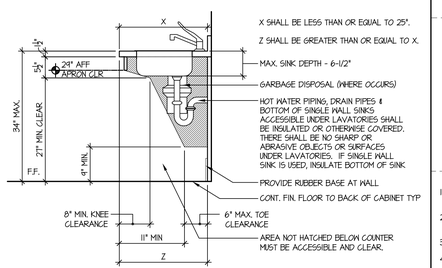

SECTION - TYP. ACCESSIBLE SINK AT CASEWORK SCALE: 3/4" = 1'-0" 11

FIXTURE MOUNTING HEIGHTS

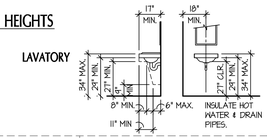

MOUNTING HEIGHTS TO FINISHED SURFACE

	CODE
DISPENSER	40" MAX.
RAMP/STAIR HANDRAIL HEIGHT	34"-38"

ACCESSORY MOUNTING HEIGHTS

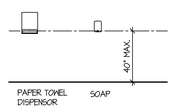

1. MOUNTING HEIGHTS SHOWN ARE TYPICAL, UNLESS OTHERWISE NOTED. INSTALL PER DISTRICT STANDARD (DS) WERE CODE ALLOWS VARIOUS DIMENSIONS
2. ALL ACCESSORIES SHALL BE DISABLED ACCESSIBLE WITH A MAXIMUM REACH HEIGHT OF 40" ABOVE FINISH FLOOR. FOLLOW MANUFACTURE RECOMMENDED MOUNTING HEIGHT FOR BARRIER-FREE DESIGN
3. SEE INTERIOR ELEVATION DRAWINGS FOR ACCESSORY LOCATIONS
4. PROVIDE BACKING FOR ALL ACCESSORIES PER MANUFACTURER RECOMMENDATIONS

FIXTURE/ ACCESSORIES NOTES SCALE: N.T.S. 12

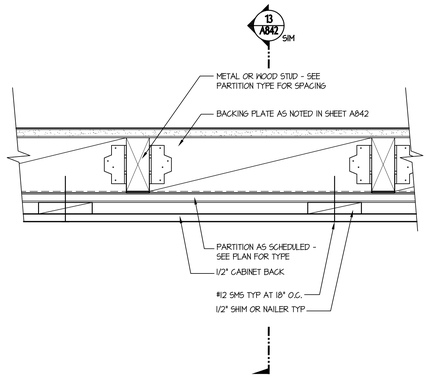

DETAIL - TYP WALL ATTACHEMENT - PLAN SCALE: 3" = 1'-0" 13

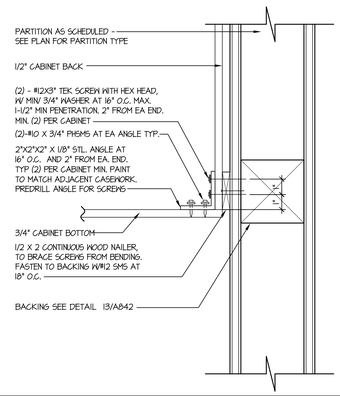

DETAIL - TYP B.O. WALL CABINET ATTACHMENT SCALE: 3" = 1'-0" 14

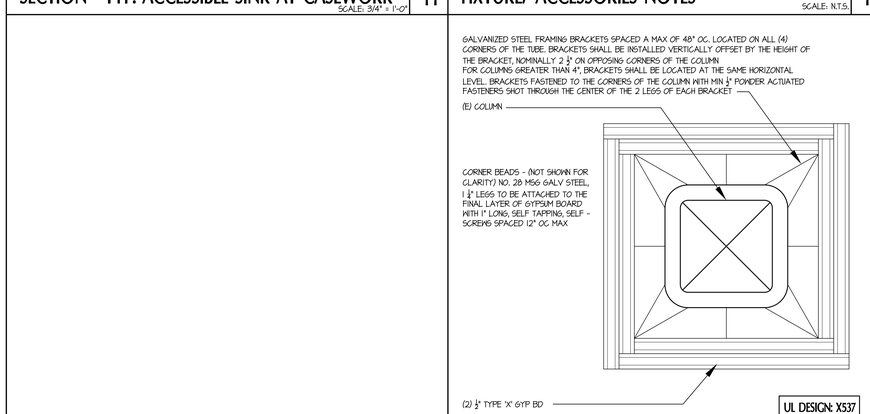

COLUMN WRAP - 1 HR SCALE: HALF 17

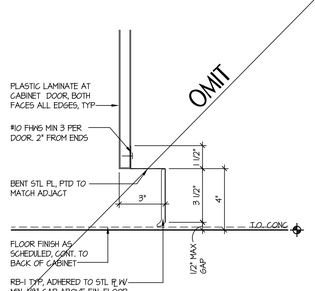

DETAIL - TYP. ACCESSIBLE CABINET BASE SCALE: 3" = 1'-0" 18

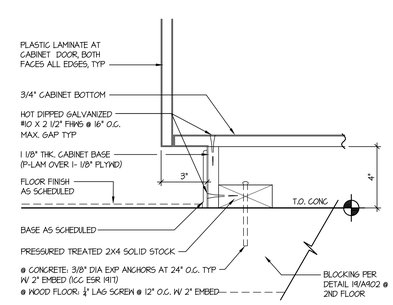

DETAIL - TYP. BASE CABINET FLR ATTACHMENT SCALE: 3" = 1'-0" 19

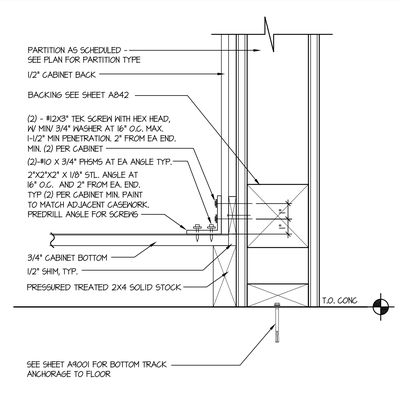

DETAIL - TYP. BASE CABINET FLR ATTACHMENT SCALE: 3" = 1'-0" 20

tBP
architecture
planning
interiors

tBP/Architecture
1777 Oakland Boulevard, Suite 320
Walnut Creek, CA 94596
ph: 925.248.8419

architect

consultant

IDENTIFICATION STAMP
DIV. OF THE STATE ARCHITECT
OFFICE OF REGULATION SERVICES
APPL # 01-116617
FILE NO. 72-C1
AC ____ FCS ____ SS ____
DATE ____

DIVISION OF THE STATE ARCHITECT
1515 CLAY STREET
OAKLAND, CA94612
ph:(510) 622-3101

agency

C-4008 APPLIED ARTS & ADMIN RENOVATION

2600 MISSION BELL DRIVE, SAN PABLO, CA 94806

CONTRA COSTA COMMUNITY COLLEGE DISTRICT
500 COURT STREET MARTINEZ, CA 94553

owner

tBP project number: 20865.00
file name: A971.dwg
drawn by: DM checked by:
date: APRIL 20, 2019

rev:	date:	description:
	8/17/2017	BID SET
	04/20/2019	RECORD SET

THIS DRAWING AND THE DESIGNS, DIRECTIONS, IDEAS AND OTHER INFORMATION CONTAINED HEREIN CONSTITUTE UNPUBLISHED WORK OF tBP/ARCHITECTURE AND SHALL REMAIN PROPERTY OF tBP/ARCHITECTURE IN PERPETUITY. NO PART THEREOF SHALL BE REPRODUCED, DISCLOSED, DISTRIBUTED, SOLD, PUBLISHED OR OTHERWISE USED IN ANY WAY WITHOUT THE ADVANCED EXPRESS WRITTEN CONSENT OF tBP/ARCHITECTURE.

drawing title:
CASEWORK DETAILS

drawing no.:
A971

000 drawing of

Record Dwgs

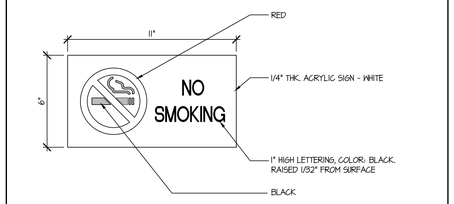

NO SMOKING SIGNAGE

SCALE: NTS (S)

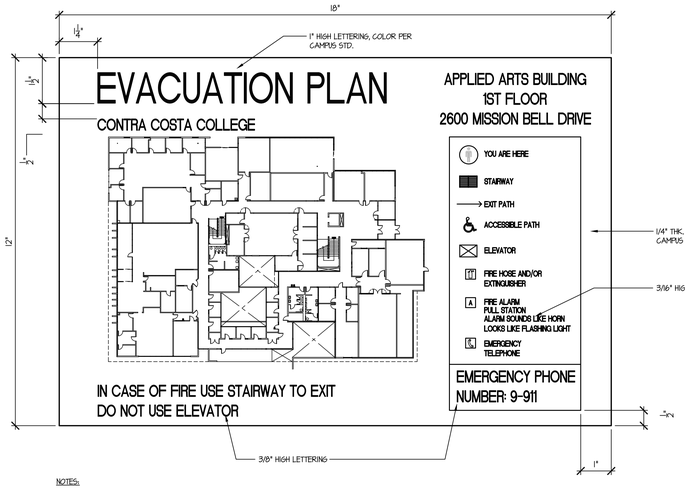

NOTES:
MOUNT SIGN PROMINENTLY ON THE WALL AT 60" ABOVE FINISH FLOOR TO CENTER OF SIGN.
- SEE GENERAL NOTES FOR MORE INFORMATION.

EMERGENCY EVACUATION PLAN

SCALE: HALF (E)

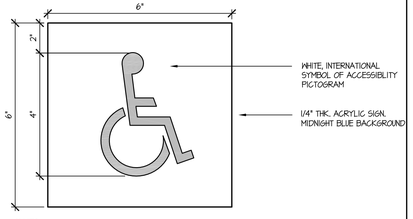

NOTES:
1. (A1) (15A) VINYL DECAL, APPLIES TO EXTERIOR GLASS, LOCATIONS PER FLOOR PLANS
2. SC-603 MIDNIGHT BLUE BACKGROUND
SC-422 BONE SYMBOL
3. LOCATIONS AS SCHEDULED, VERIFY IN FIELD PRIOR TO INSTALLATION
4. MOUNT SIGN ON THE WALL ADJACENT TO LATCH SIDE OF DOOR, AT 60" MAX. ABOVE FINISH FLOOR TO CENTER OF SIGN. WHERE THERE IS NO WALL SPACE ON LATCH SIDE OF DOOR, PLACE SIGN ON NEAREST ADJACENT WALL, PREFERABLY ON THE RIGHT. WHERE INDICATED, MOUNT ON BOTH SIDES OF GLASS SIDELITE. PROVIDE SAME SIZE BLANK PLATE ON OPPOSITE SIDE OTHERWISE
5. SEE FINISH PLANS FOR QUANTITY OF THIS SIGN REQUIRED
6. CHARACTERS AND BACKGROUND OF THE SIGN SHALL BE EGGSHELL, MATTE, OR OTHER NON-GLARE FINISH AND CHARACTERS SHALL CONTRAST WITH THEIR BACKGROUND

INTERNATIONAL SYMBOL OF ACCESSIBILITY

SCALE: NTS (A)

1. WHERE TACTILE SIGNAGE IS PROVIDED AT A DOOR, SIGN SHALL BE LOCATED ON THE WALL ADJACENT TO THE LATCH SIDE OF THE DOOR. WHERE THERE IS NO WALL SPACE TO THE LATCH SIDE OF THE DOOR, INCLUDING AT DOUBLE LEAF DOORS, SIGNS SHALL BE PLACED ON THE NEAREST ADJACENT WALL, PREFERABLY ON THE RIGHT PER CBC 11B-703.4.2) AND RIGHT OF THE RIGHT HAND DOUBLE DOOR.
SEE SIGNAGE LOCATION LEGEND THIS SHEET FOR MOUNTING HEIGHT.
SIGNS CONTAINING TACTILE CHARACTERS SHALL BE LOCATED SO THAT A CLEAR FLOOR SPACE OF 18-INCHES SQUARE MIN, CENTERED ON THE TACTILE CHARACTERS, IS PROVIDE BEYOND THE ARC OF ANY DOOR SWING.
2. ALL SIGNS SHALL BE 1/4" THICK MINIMUM U.O.N. WITH MIN. 1/8" RADIUSED CORNERS TYP
3. CHARACTERS, PICTOGRAMS AND BACKGROUND OF THE SIGN SHALL BE EGGSHELL, MATTE, OR OTHER NON-GLARE FINISH AND CHARACTERS AND PICTOGRAMS SHALL CONTRAST WITH THEIR BACKGROUND.
4. CONTRACTED CALIFORNIA GRADE 2 BRAILLE SHALL BE USED WHENEVER BRAILLE SYMBOLS ARE SPECIFICALLY REQUIRED IN OTHER PORTIONS OF THESE STANDARDS. DOTS SHALL BE 1/10 INCH (2.54 mm) ON CENTERS IN EACH CELL WITH 2/10 INCH (5.08 mm) SPACE BETWEEN CELLS. DOTS SHALL BE RAISED A MINIMUM OF 1/40 (0.635 mm) ABOVE THE BACKGROUND.
5. ALL SIGN LETTERING TO BE RAISED 1/32" AND 5/8" MIN. TO 2" MAX. IN HEIGHT. USE LARGEST LETTER HEIGHT PRACTICAL. LETTER CHARACTERS TO BE UPPER CASE SANS-SERIF.
6. VERIFY EXACT SIGN TEXT AND ROOM NUMBER AS PART OF THE SUBMITTAL PROCESS.
AT LEAST (3) BLANK INSERTS SHALL BE PROVIDED FOR SIGN TYPES WITH INSERTS.
7. VERIFY ORIENTATION OF DIRECTIONAL ARROWS AS PART OF THE SUBMITTAL PROCESS
8. ALL WALL MOUNTED SIGNS MOUNTED TO MASONRY, PLASTER, CERAMIC TILE, WALL COVERING, OR ACOUSTICAL PANEL SHALL BE MECHANICALLY FASTENED WITH VANDALPROOF FASTENERS THROUGH THE WALL FINISH AND INTO METAL BACKING, SEE SHEET A842. PROVIDE SPACERS AS REQUIRED.
9. ALL INTERIOR WALL MOUNTED SIGNS SECURED TO DRYWALL SHALL BE ADHESIVELY APPLIED.
10. ALL SIGNS ADHESIVELY APPLIED TO GLASS SHALL HAVE A BLANK PLASTIC BACKING THE SAME SIZE AS THE SIGN ADHESIVELY APPLIED TO THE OTHER SIDE OF THE GLASS. COLOR: BLACK
11. SIGNS AND IDENTIFICATION REQUIRED BY SECTIONS 1011.4, 1022.8, AND 11B-703 OF THE CBC. SIGNS SHALL BE FIELD INSPECTED PER CBC 11B-703.1.1.2.
12. TEXT: "NEUTRA TEXT DEMI"

SIGNAGE GENERAL NOTES

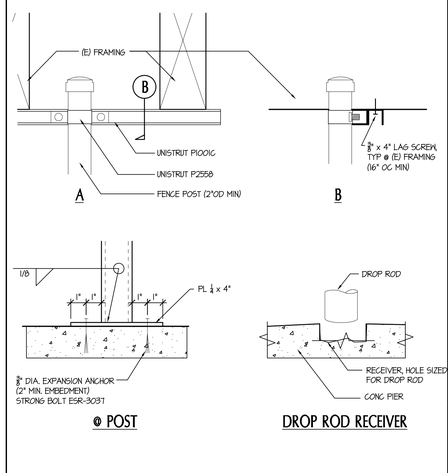

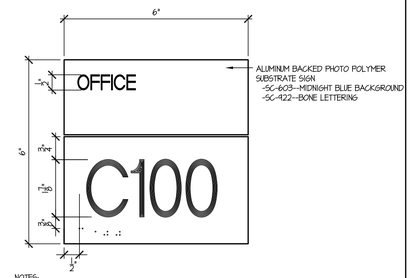

NOTES:
1. TEXT AS SHOWN TO BE 1 3/4" ADA RAISED & 1/32" TEXT VINYL APPLIED. LOCATIONS AS SCHEDULED, VERIFY IN FIELD PRIOR TO INSTALLATION
2. SYSTEM DESCRIPTION: ADA PANEL W/RAISED TEXT & BRAILLE, 1/32" ABOVE PANEL SURFACE. PHOTO POLYMER PANEL ADHERED TO ALUMINUM CARRIER PANEL, PANEL ATTACHES TO FRAMEWORK MOUNTED ON WALL. ADA-READY PANELS W/ WRAP-AROUND PANEL EDGES.
3. REFER TO SIGNAGE GENERAL NOTES & SIGNAGE LOCATION LEGEND THIS SHEET
4. SEE PLAN AND DOOR SCHEDULE FOR QUANTITY OF THIS SIGN REQUIRED
5. TEXT: NEUTRA TEXT DEMI

ROOM IDENTIFICATION SIGNAGE

SCALE: HALF (B)

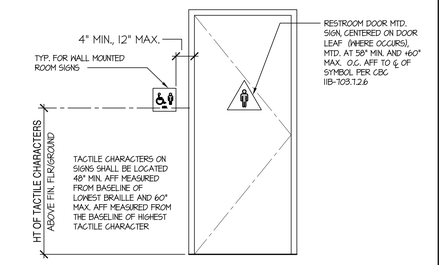

WHERE TACTILE SIGN IS PROVIDED AT A DOOR, SIGN SHALL BE LOCATED ON ADJ WALL ON LATCH SIDE OF THE DOOR. SIGNS CONTAINING TACTILE CHARACTERS SHALL BE LOCATED SO THAT A CLEAR FLOOR SPACE OF 18-INCHES SQUARE MIN, CENTERED ON THE TACTILE CHARACTERS, IS PROVIDED BEYOND THE ARC OF ANY DOOR SWING.

SIGNAGE LOCATION LEGEND

SCALE: N.T.S. (2)

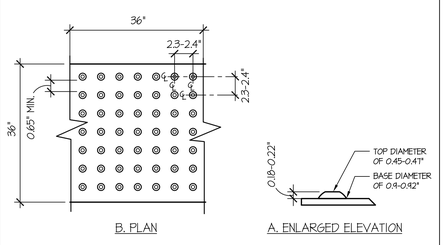

TRUNCATED DOMES

SCALE: N.T.S. (12)

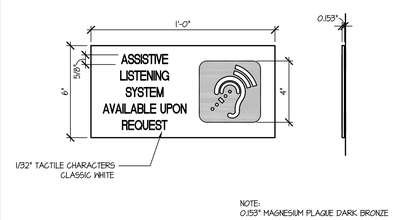

ASSISTIVE LISTENING DEVICE SIGNAGE

SCALE: NTS (F)

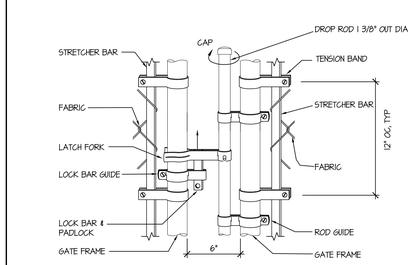

DROP ROD ASSEMBLY

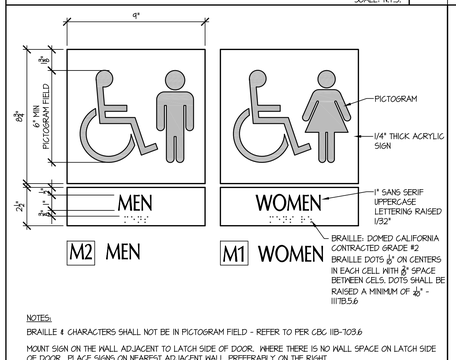

NOTES:
BRAILLE & CHARACTERS SHALL NOT BE IN PICTOGRAM FIELD - REFER TO PER CBC 11B-703.6
MOUNT SIGN ON THE WALL, ADJACENT TO LATCH SIDE OF DOOR. WHERE THERE IS NO WALL SPACE ON LATCH SIDE OF DOOR, PLACE SIGNS ON NEAREST ADJACENT WALL, PREFERABLY ON THE RIGHT.
- SEE SIGNAGE LOCATION LEGEND THIS SHEET FOR ADDL NOTES AND MOUNTING HEIGHT
- SEE SIGNAGE PLANS FOR QUANTITY OF THIS SIGN REQUIRED
- COLOR SC-603 MIDNIGHT BLUE BACKGROUND WITH SC-422 BONE SYMBOL AND LETTERING

WALL MOUNTED TOILET ROOM SIGNAGE

SCALE: NTS (M)

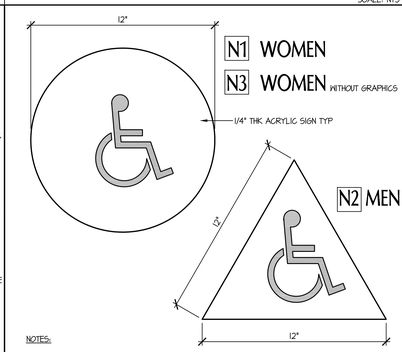

NOTES:
- SEE SIGNAGE LOCATION LEGEND THIS SHEET FOR ADDL NOTES AND MOUNTING HEIGHT
- SEE SIGNAGE PLANS FOR QUANTITY OF THIS SIGN REQUIRED.
- SIGN COLOR SHALL BE MIN. 70% CONTRAST TO DOOR COLOR
- COLOR SC-603 MIDNIGHT BLUE BACKGROUND WITH SC-422 BONE SYMBOL

DOOR MOUNTED TOILET ROOM SIGANGE

SCALE: NTS (N)

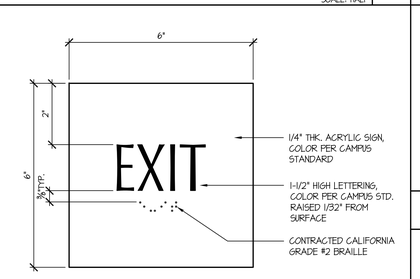

NOTES:
1. (B1) ALUMINUM BACKED PHOTO POLYMER SUBSTRATE SIGN, SC-603 MIDNIGHT BLUE BACKGROUND / SC-422, BONE LETTERING. INFORMATIONAL PLAQUE
2. TEXT AS SHOWN TO BE 1 1/2" IN HEIGHT
3. LOCATIONS PER SCHEDULE, VERIFY IN FIELD PRIOR TO INSTALLATION
4. SYSTEM DESCRIPTION: ADA PANEL W /RAISED TEXT AND BRAILLE, 1/32" ABOVE PANEL SURFACE. INSTALLATION. DOUBLE STICK FOAM TAPE & SILICONE ADHESIVE/ LATCH SIDE OF DOOR, 60" FROM CENTER OF PLAQUE TO FLOOR, FLOOR PLANS SHOW LOCATIONS
5. THE CHARACTERS AND BACKGROUND OF THE SIGN SHALL BE EGGSHELL, MATTE

TACTILE EXIT SIGN

SCALE: HALF (C)

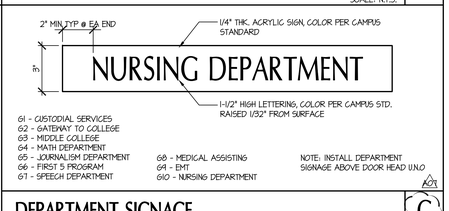

DEPARTMENT SIGNAGE

SCALE: NTS (G)

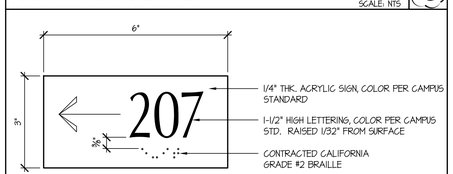

WAY FINDING SIGN

SCALE: HALF (H)

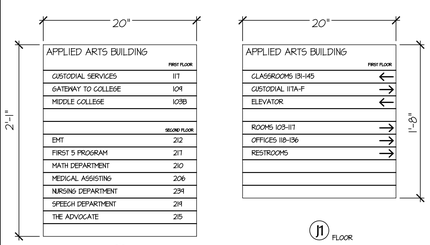

NOTES:
STRATA SIGN SYSTEM, MIDNIGHT BLUE, SC-603 BACKGROUND, SC-422 BONE LETTERING/SYMBOLS.
TEXT TO BE PROVIDED DURING REVIEW. PANEL SIZES AS NOTED. QUANTITY TO BE PROVIDED PER GRAPHIC SCHEDULE.
LOCATIONS AS SCHEDULED, VERIFY IN FIELD PRIOR TO INSTALLATION.
SYSTEM DESCRIPTION:
ADA PANEL, NON-TACTILE LEGEND, VINYL APPLIED
PHOTOPOLYMER PANEL, PANEL ATTACHES TO FRAMEWORK MOUNTED ON WALL.
ADA-READY PANELS WITH WRAP-AROUND PANEL EDGES.

BUILDING/ FLOOR DIRECTORY

SCALE: N.T.S. (J)

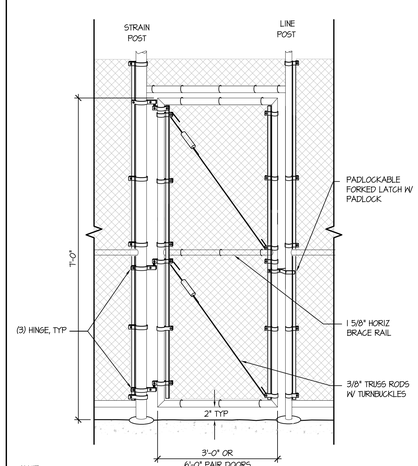

NOTE:
ATTACHMENT OF SLATS, SIGNS OR SIMILAR ATTACHMENTS ARE NOT ALLOWED T OPEN-MESH FENCE

PEDESTRIAN GATE

CHAIN LINK DETAIL

SCALE: 3/8" = 1'-0" (16)

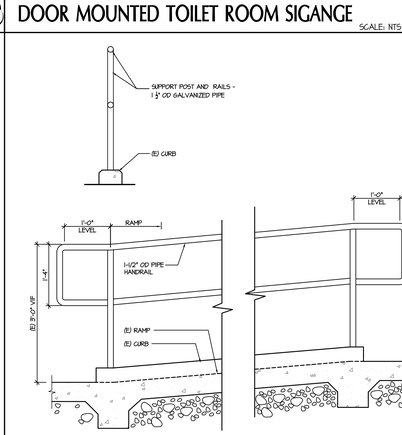

HANDRAIL EXTENSION @ ACCESSIBLE RAMP

SCALE: 3/4" = 1'-0" (18)

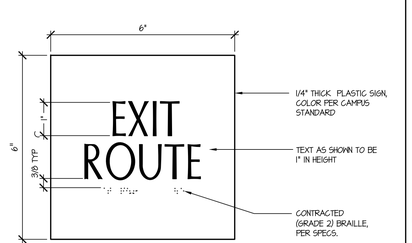

NOTES:
1. (B2) ALUMINUM BACKED PHOTO POLYMER SUBSTRATE SIGN, SC-603--MIDNIGHT BLUE BACKGROUND
SC-422 BONE LETTERING, INFORMATIONAL PLAQUE
2. TEXT AS SHOWN TO BE 1" IN HEIGHT
3. LOCATIONS AS SCHEDULED, VERIFY IN FIELD PRIOR TO INSTALLATION
4. SYSTEM DESCRIPTION: ADA PANEL/W RAISED TEXT & BRAILLE, 1/32" ABOVE PANEL SURFACE. PHOTO PLYMER PANEL ADHERED TO ALUMINUM CARRIER PANEL, PANEL ATTACHES TO FRAMEWORK MOUNTED ON WALL. ADA-READY PANELS WITH WRAP-AROUND PANEL EDGES
5. INSTALLATION. SIGN PANEL ATTACHES TO FRAMEWORK MOUNTED TO WALL, AT LATCH SIDE OF DOOR, 60" FROM CENTER OF PLAQUE TO FLOOR, FLOOR PLANS SHOW LOCATIONS
6. TEXT: NEUTRA TEXT DEMI

TACTILE EXIT ROUTE SIGN

SCALE: HALF (D)

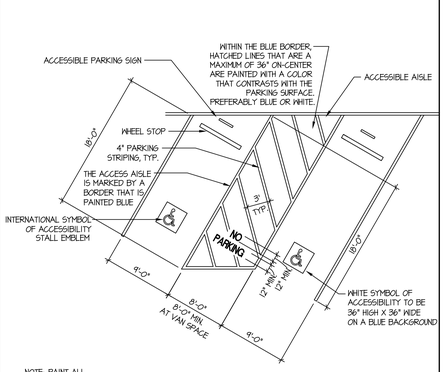

(E) ACCESSIBLE PARKING SPACE

SCALE: 1/8" = 1'-0" (20)

tBP
architecture
planning
interiors
tBP/Architecture
1777 Oakland Boulevard, Suite 320
Walnut Creek, CA 94596
ph: 925.248.8419
architect

consultant

IDENTIFICATION STAMP
DIV. OF THE STATE ARCHITECT
OFFICE OF REGULATION SERVICES
APPL # 01-116617
FILE NO. 7-C1
AC KS SS
DATE

DIVISION OF THE STATE ARCHITECT
1515 CLAY STREET
OAKLAND, CA94612
ph:(510) 622-3101

agency

C-4008 APPLIED ARTS & ADMIN RENOVATION

2600 MISSION BELL DRIVE, SAN PABLO, CA 94806

CONTRA COSTA COMMUNITY COLLEGE DISTRICT
500 COURT STREET MARTINEZ, CA 94553

owner

tBP project number: 20865.00
file name: A981 SIGNAGE.DWG
drawn by: DM checked by:
date: APRIL 20, 2019

rev:	date:	description:
	8/17/2017	BID SET
A01	01/26/18	ASI 07
	04/20/2019	RECORD SET

THIS DRAWING AND THE DESIGNS, DEFINITIONS, IDEAS AND OTHER INFORMATION CONTAINED HEREIN CONSTITUTE UNPUBLISHED WORK OF tBP/ARCHITECTURE AND SHALL REMAIN PROPERTY OF tBP/ARCHITECTURE IN PERPETUITY. NO PART THEREOF SHALL BE REPRODUCED, DISCLOSED, DISTRIBUTED, SOLD, PUBLISHED OR OTHERWISE USED IN ANY WAY WITHOUT THE ADVANCED EXPRESS WRITTEN CONSENT OF tBP/ARCHITECTURE.

drawing title:
SIGNAGE & MISC. DETAILS

drawing no.:
A981

drawing of

Record Dwgs

DUCT LEGEND

SINGLE LINE SYMBOL	DOUBLE LINE SYMBOL	DESCRIPTION
24x12	24x12	RECTANGULAR DUCT – WIDTH x DEPTH (PLAN VIEW) DEPTH x WIDTH (SECTION VIEW)
26x14L	26x14L	ACOUSTICALLY LINED RECTANGULAR DUCT–DIMENSIONS ARE OUTSIDE
		MANUAL AIR DAMPER
R OR D	RISE OR DROP	RISE OR DROP DUCT IN DIRECTION OF AIR FLOW
	OR	RECTANGULAR TO RECTANGULAR TRANSISTION , MAX. SLOPE OF 1:3 RECTANGULAR TO ROUND TRANSITION , MAX. SLOPE OF 1:3
	R, W, R/W = 1.5	ELBOW, RECTANGULAR, SMOOTH RADIUS, WITHOUT TURNING VANES
		SQUARE/RECTANGULAR DUCT ELBOW WITH TURNING VANES
		CONVERGING OR DIVERGING TEE, 45° ENTRY, RECTANGULAR MAIN AND BRANCH. WHEN REDUCING MAIN, SIDE OF TAKE OFF OR ENTRY BRANCH TO BE FLAT, OTHER SIDES MAX. SLOPE OF 1:3
		CONICAL DUCT TAKE OFF FROM RECTANGULAR VIA SPIN–IN W/DAMPER AND SCOOP
ROUND DUCT		ROUND DUCT TAKE OFF FROM RECTANGULAR VIA SMOOTH CONVERGING BELL MOUTH
		RECTANGULAR DUCT TEE MAD'S ON THE 2 BRANCHES, THROAT SIZED FOR EQUAL PRESSURE DROP
		RECTANGULAR DUCT SPLIT MAD'S, THROAT SIZED FOR EQUAL PRESSURE DROP
		3–WAY RECTANGULAR SPLIT WITH TWO TRANSITIONAL ELBOWS AND TRANSITIONING MAIN. DOWNSTREAM MAD'S ON THE TREE BRANCHES. THROATS SIZED FOR EQUAL PRESSURE DROP.
		FOR CONCEALED DUCT: DROP TO DIFFUSER SHALL BE FULL SIZE OF DIFFUSER NECK. FOR EXPOSED DUCT: DROP SHALL BE FULL SIZE OF OD DIFFUSER FRAME, FLANGE FOR MOUNITING DIFFUSER TURNED IN. AIR EXTRACTOR AND EQUALIZER GRID AT CONNECTION TO MAIN.
		SUPPLY AIR, SUPPLY AIR DUCT IN SECTION, SUPPLY DROP
		RETURN AIR, RETURN AND OUTSIDE AIR DUCT IN SECTION, RETURN AIR DROP
		EXHAUST AIR, EXHAUST AIR DUCT IN SECTION, EXHAUST AIR DROP
		FLEXIBLE DUCT (ROUND)
		FLEXIBLE DUCT (FABRIC)
MAD, 18"ø, 10"ø, 12"ø	18"ø, 10"ø, 12"ø	45° REDUCING LATERAL FITTING
MAD, 18"ø, 10"ø, 12"ø	18"ø, 10"ø, 12"ø	90° REDUCING TEE FITTING

MECHANICAL GENERAL NOTES

1. ALL WORK SHALL COMPLY WITH ALL APPLICABLE CODES, SPECIFICATIONS, LOCAL ORDINANCES AND INDUSTRY STANDARDS. SEE SHEET A001.
2. VERIFY EXACT LOCATION OF ALL (E) EQUIPMENT, DUCTWORK, DIFFUSERS, REGISTERS AND GRILLES. NOTIFY ARCHITECT IMMEDIATELY OF ANY DISCREPANCIES BETWEEN (E) SYSTEMS AND DRAWINGS.
3. COORDINATE EXACT LOCATION OF EQUIPMENT AND ALL PENETRATIONS THROUGH ROOF, FLOORS AND WALLS WITH ARCHITECTURAL STRUCTURAL SYSTEMS PRIOR TO COMMENCING WORK.
4. COORDINATE EXACT SIZE AND ROUTING OF DUCTWORK WITH ARCHITECTURAL PLANS, STRUCTURE AND EQUIPMENT PRIOR TO COMMENCING WORK.
5. SEE ARCHITECTURAL REFLECTED CEILING PLAN FOR EXACT LOCATION OF ALL CEILING DIFFUSERS, REGISTERS AND GRILLES.
6. FURNISH AND INSTALL MANUAL AIR DAMPERS AT ALL DUCT BRANCH TAKEOFFS TO A SINGLE SUPPLY DUFFUSER AS SHOWN ON PLANS.
7. FLEXIBLE DUCTWORK CONNECTIONS TO CEILING DIFFUSERS ARE LIMITED TO 5' MAXIMUM LENGTH.
8. ALL DUCTWORK, CEILING DIFFUSERS/REGISTERS/GRILLES, EQUIPMENT, PIPING ETC., ARE NEW U.O.N. (SHOWN HEAVY). (E) DUCTWORK, PIPING ETC. IS SHOWN LIGHT. SEE LEGEND.
9. (E) DUCTWORK AND ITEMS TO BE REMOVED ARE SHOWN CROSSED ("X") OUT, SEE LEGEND, COORDINATE CLOSELY WITH (N) DUCTWORK AND P.O.C.'S SHOWN. ALL OTHER (E) DUCTWORK, ETC. TO REMAIN.
10. WHERE INLET DUCT DIAMETER AND DIFFUSER NECK SIZE ARE THE SAME (I.E. 9"ø & 9x9) CONTRACTOR SHALL OVERSIZE THE SHEET METAL PLENUM TO ACCOMODATE THE ROUND DUCT CONNECTION.
11. THERMOSTAT TO BE INSTALLED AT 46" ABOVE FINISHED FLOOR (TOP OF THERMOSTAT), DO NOT INSTALL THERMOSTAT OVER CASEWORK OR SHELVING OVER 24" IN DEPTH & 34" IN HEIGHT.

MECHANICAL LEGEND

SYMBOL	ABBREVIATION	DESCRIPTION
	ABV	ABOVE
	ABC	ABOVE CEILING
	AF	ABOVE FLOOR
	AFF	ABOVE FINISHED FLOOR
	AD , AP	ACCESS DOOR , ACCESS PANEL
	AC	AIR CONDITIONING
	APD	AIR PRESSURE DROP, INCHES WATER COLUMN
	ANV	ANGLE VALVE
	AAV	AUTOMATIC AIR VENT
ATV	ATV	ATMOSPHERIC VENT (STEAM OR HOT VAPOR)
	BV	BALL VALVE
	BDD	BACK DRAFT DAMPER
	BFP	BACKFLOW PREVENTER
	BF	BELOW FLOOR
	BHP	BRAKE HORSE POWER
	BTU(H)	BRITISH THERMAL UNITS (PER HOUR)
	BFV	BUTTERFLY VALVE
BPT	BPT	BYPASS TIMER
	CBV	CALIBRATED BALANCE VALVE
	CC	CENTER TO CENTER
	CLG	CEILING
	CEF	CEILING EXHAUST FAN
	CKV	CHECK VALVE
CHWS	CHWS	CHILLED WATER SUPPLY PIPING
CHWR	CHWR	CHILLED WATER RETURN PIPING
	CP	CIRCULATING PUMP
	CLR	CLEAR
	CONC	CONCRETE
		CONCENTRIC REDUCER
CD	CD	CONDENSATE DRAIN
CR	CR	CONDENSATE RETURN
	COND	CONDENSER
CWS	CWS	CONDENSER WATER SUPPLY PIPING
CWR	CWR	CONDENSER WATER RETURN PIPING
	CONN	CONNECT OR CONNECTION
	CONT	CONTINUATION
	CONTR	CONTRACTOR
	CT	COOLING TOWER
f	CFM	CUBIC FEET OF AIR FLOW PER MINUTE
	DPR	DAMPER
°F		DEGREES FAHRENHEIT
ø	DIA	DIAMETER , PHASE
	DL	DOOR LOUVER
	DN	DOWN
	DR	DRAIN
	DB	DRY BULB (DEGREES FAHRENHEIT)
DS	DS	DYNAMIC SENSOR
		ECCENTRIC REDUCER
	EL	ELEVATION
	ENT	ENTERING
	EDB	ENTERING DRY BULB
	EW	ENTERING WATER
	EWT	ENTERING WATER TEMPERATURE
	EWB	ENTERING WET BULB
	EVAP	EVAPORATOR
	EC	EVAPORATIVE COOLER
	EA	EXHAUST AIR
	EAD	EXHAUST AIR DAMPER
	EF	EXHAUST FAN
	(E), EXIST	EXISTING
	(E)	EXISTING TO BE REMOVED
	(E)	EXISTING TO BE ABANDONED
	ESP	EXTERNAL STATIC PRESSURE
	FPM	FEET PER MINUTE
	FIN	FINISH
F	FD	FIRE DAMPER
FS	FS	FIRE/SMOKE DAMPER
	FC	FLEXIBLE CONNECTION
	FLR	FLOOR
		FLOW IN DIRECTION OF ARROW
	FLV	FLOW LIMITING VALVE
	FA	FROM ABOVE
	FB	FROM BELOW
	FLA	FULL LOAD AMPS
	GCK	GAGE COCK
	GPH	GALLONS PER HOUR
	GPM	GALLONS PER MINUTE
	GV	GATE VALVE
	GLV	GLOBE VALVE
	GALV	GALVANIZED
	GA	GAUGE
	HTG	HEATING
HPS	HPS	HIGH PRESSURE STEAM
HPR	HPR	HIGH PRESSURE RETURN
	HW	HOT WATER
HWS	HWS	HOT WATER SUPPLY PIPING
HWR	HWR	HOT WATER RETURN PIPING

MECHANICAL LEGEND cont'd

SYMBOL	ABBREVIATION	DESCRIPTION
H X	H	HUMIDISTAT, "X" INDICATES DEVICE CONTROLLED
	IB	INDUCTION BOX TERMINAL UNIT
	IE	INVERT ELEVATION
	KW	KILOWATTS
	KWH	KILOWATT HOUR
	LDB	LEAVING DRY BULB IN DEGREES FAHRENHEIT
	LWB	LEAVING WET BULB IN DEGREES FAHRENHEIT
	LRA	LOCKED ROTOR AMPERES
	LVR	LOUVER
LPS	LPS	LOW PRESSURE STEAM
LPR	LPR	LOW PRESSURE RETURN
	MAD, MD	MANUAL AIR DAMPER
	MAV	MANUAL AIR VENT
	MFR	MANUFACTURER
	MAX	MAXIMUM
MPS	MPS	MEDIUM PRESSURE STEAM
MPR	MPR	MEDIUM PRESSURE RETURN
	MIN	MINIMUM
	MCC	MOTOR CONTROL CENTER
	(N)	NEW
	OC	ON CENTER
	OA	OUTSIDE AIR
	OAD	OUTSIDE AIR DAMPER
	OD	OUTSIDE DIAMETER
	OV	OUTLET VELOCITY
	OH	OVERHEAD
		PETE'S PLUG
		PIPE ANCHOR
		PIPE DROP
		PIPE GUIDE
		PIPE RISE
		PITCH DOWN IN DIRECTION OF FLOW
	POC	POINT OF CONNECTION
	LBS	POUNDS
	PSI (G) (A)	POUNDS PER SQUARE INCH (GAUGE) (ABSOLUTE)
	PD	PRESSURE DROP
	PG	PRESSURE GAUGE
	PRV	PRESSURE REDUCING VALVE
	PCR	PUMPED CONDENSATE RETURN
RG	RG	REFRIGERANT GAS PIPING
RS	RS	REFRIGERANT SUCTION PIPING
RL	RL	REFRIGERANT LIQUID PIPING
	RV or P&TRV	RELIEF VALVE OR PRESSURE & TEMPERATURE RELIEF VALVE
	RA	RETURN AIR
	RAD	RETURN AIR DAMPER
	RPM	REVOLUTIONS PER MINUTE
	RLA	RUNNING LOAD AMPERES
	SB	SECURITY BARS
	SM	SHEET METAL
SD	SD	SMOKE DAMPER
SD	SKD	SMOKE DETECTOR
	SD	SPLITTER DAMPER
	SQFT, FT^2	SQUARE FEET
	SQIN, IN^2	SQUARE INCHES
	SP	STATIC PRESSURE
	SPD	STATIC PRESSURE DROP
		STEAM TRAP (ALL TYPES)
	STR	STRAINER
	SA	SUPPLY AIR
	SF	SUPPLY FAN
	TCP	TEMPERATURE CONTROL PANEL
	TCV	TEMPERATURE CONTROL VALVE
TS X		TEMPERATURE SENSOR, "X" INDICATES DEVICE CONTROLLED
		THERMOMETER
T X	T	THERMOSTAT, "X" INDICATES DEVICE CONTROLLED
	MBH	THOUSAND BRITISH THERMAL UNITS PER HOUR
	TA	TO ABOVE
	TB	TO BELOW
	TP	TOTAL PRESSURE
	TSP	TOTAL STATIC PRESSURE
	TYP	TYPICAL
	UG	UNDERGROUND
	UCD	UNDER CUT DOOR
	UON	UNLESS OTHERWISE NOTED
		UNION
	VLV	VALVE
		VALVE IN RISER (TYPE AS INDICATED OR NOTED)
		VALVE IN VALVE BOX
	WPD	WATER PRESSURE DROP
	W	WATTS
	WT	WEIGHT
	WB	WET BULB
	WMS	WIRE MESH SCREEN
	WP	WORKING PRESSURE
		2–WAY CONTROL VALVE
		3–WAY CONTROL VALVE

PIPING, DUCTWORK & ELECTRICAL DISTRIBUTION SYSTEM BRACING NOTE

PIPING, DUCTWORK, AND ELECTRICAL DISTRIBUTION SYSTEMS SHALL BE BRACED TO COMPLY WITH THE FORCES AND DISPLACEMENTS PRESCRIBED IN ASCE 7–10 SECTION 13.3 AS DEFINED IN ASCE 7–10 SECTION 13.6.5.6, 13.6.7, 13.6.8, AND 2016 CBC, SECTIONS 1616A.1.23, 1616A.1.24, 1616A.1.25 AND 1616A.1.26.

THE METHOD OF SHOWING BRACING AND ATTACHMENTS TO THE STRUCTURE FOR THE IDENTIFIED DISTRIBUTION SYSTEM ARE AS NOTED BELOW. WHEN BRACING AND ATTACHMENTS ARE BASED ON PREAPPROVED INSTALLATION GUIDE (e.g., SMACNA OR OSHPD OPM). COPIES OF THE BRACING SYSTEM INSTALLATION GUIDE OR MANUAL SHALL BE AVAILABLE ON THE JOBSITE PRIOR TO THE START OF AND DURING THE HANGING AND BRACING OF THE DISTRIBUTION SYSTEMS. THE STRUCTURAL ENGINEER OF RECORD SHALL VERIFY THE ADEQUACY OF THE STRUCTURE TO SUPPORT THE HANGER AND BRACE LOADS.

MECHANICAL PIPING (MP), MECHANICAL DUCTS (MD), PLUMBING PIPING (PP), ELECTRICAL DISTRIBUTION SYSTEMS (E):

MP☐ MD☐ PP☐ E☐ — OPTION 1: DETAILED ON THE APPROVED DRAWINGS WITH PROJECT SPECIFIC NOTES AND DETAILS

MP☒ MD☒ PP☐ E☐ — OPTION 2: SHALL COMPLY WITH THE APPLICABLE OSHPD PRE–APPROVED (OPM #) #0043–13.

MP☐ MD☐ PP☐ — OPTION 3: SHALL COMPLY WITH THE SMACNA SEISMIC RESTRAINT MANUAL. OSHPD EDITION (2009), INCLUDING ANY ADDENDA. FASTENERS AND OTHER ATTACHMENTS NOT SPECIFICALLY IDENTIFIED IN THE SMACNA SEISMIC RESTRAINT MANUAL, OSHPD EDITION, ARE DETAILED ON THE APPROVED DRAWINGS WITH PROJECT SPECIFIC NOTES AND DETAILS. THE DETAILS SHALL ACCOUNT FOR THE APPLICABLE SEISMIC HAZARD LEVEL _____ AND CONNECTION LEVEL _____ FOR THE PROJECT AND CONDITIONS.

MEP COMPONENT ANCHORAGE NOTE

ALL MECHANICAL, PLUMBING, AND ELECTRICAL COMPONENTS SHALL BE ANCHORED AND INSTALLED PER THE DETAILS ON THE DSA APPROVED CONSTRUCTION DOCUMENTS. WHERE NO DETAIL IS INDICATED, THE FOLLOWING COMPONENTS SHALL BE ANCHORED OR BRACED TO MEET THE FORCE AND DISPLACEMENT REQUIREMENTS PRESCRIBED IN THE 2013 CBC, SECTIONS 1616A.1.18 THROUGH 1616A.1.26 AND ASCE 7–10 CHAPTER 13, 26 AND 30.

1. ALL PERMANENT EQUIPMENT AND COMPONENTS.
2. TEMPORARY OR MOVABLE EQUIPMENT THAT IS PERMANENTLY ATTACHED (e.g. HARD WIRED) TO THE BUILDING UTILITY SERVICES SUCH AS ELECTRICITY, GAS OR WATER.
3. MOVABLE EQUIPMENT WHICH IS STATIONED IN ONE PLACE FOR MORE THAN 8 HOURS AND HEAVIER THAN 400 POUNDS OR HAS A CENTER OF MASS LOCATED 4 FEET OR MORE ABOVE THE ADJACENT FLOOR OR ROOF LEVEL THAT DIRECTLY SUPPORT THE COMPONENT ARE REQUIRED TO BE ANCHORED WITH TEMPORARY ATTACHMENTS.

THE FOLLOWING MECHANICAL AND ELECTRICAL COMPONENTS SHALL BE POSITIVELY ATTACHED TO THE STRUCTURE, BUT THE ATTACHMENT NEED NOT BE DETAILED ON THE PLANS. THESE COMPONENTS SHALL HAVE FLEXIBLE CONNECTIONS PROVIDED BETWEEN THE COMPONENT AND ASSOCIATED DUCTWORK, PIPING, AND CONDUIT.

A. COMPONENTS WEIGHING LESS THAN 400 POUNDS AND HAVE A CENTER OF MASS LOCATED 4 FEET OR LESS ABOVE THE ADJACENT FLOOR OR ROOF LEVEL THAT DIRECTLY SUPPORT THE COMPONENT.
B. COMPONENTS WEIGHING LESS THAN 20 POUNDS, OR IN THE CASE OF DISTRIBUTION SYSTEMS, LESS THAN 5 POUNDS PER FOOT, WHICH ARE SUSPENDED FROM A ROOF OR FLOOR OR HUNG FROM A WALL.

FOR THOSE ELEMENTS THAT DO NOT REQUIRE DETAILS ON THE APPROVED DRAWINGS, THE INSTALLATION SHALL BE SUBJECT TO THE APPROVAL OF THE DESIGN PROFESSIONAL IN GENERAL RESPONSIBLE CHARGE OR STRUCTURAL ENGINEER DELEGATED RESPONSIBILITY AND THE DSA DISTRICT STRUCTURAL ENGINEER. THE PROJECT INSPECTOR WILL VERIFY THAT ALL COMPONENTS AND EQUIPMENT HAVE BEEN ANCHORED IN ACCORDANCE WITH ABOVE REQUIREMENTS.

tBP architecture planning interiors

tBP/Architecture
1777 Oakland Boulevard, Suite 320
Walnut Creek, CA 94596
ph: 925.246.6419

architect

DATE SIGNED: 03/21/18

CAPITAL ENGINEERING CONSULTANTS, INC.
RANCHO CORDOVA, CALIFORNIA
TD – RCC/MJR/JCH 160761.00
PM – DESIGN TEAM PROJECT NO.

consultant

IDENTIFICATION STAMP
DIV. OF THE STATE ARCHITECT
OFFICE OF REGULATION SERVICES
APP. #01-[illegible]
FILE NO. 7-C1
AC [illegible] FLS [illegible] SS [illegible]
DATE [illegible]

DIVISION OF THE STATE ARCHITECT
1515 CLAY STREET
OAKLAND, CA 94612
ph:(510) 622-3101

agency

C-4008 APPLIED ARTS & ADMIN RENOVATION
2600 MISSION BELL DRIVE, SAN PABLO, CA 94806

CONTRA COSTA COMMUNITY COLLEGE DISTRICT
500 COURT STREET MARTINEZ, CA 94553

owner

tBP project number: 20865.00

scale: NONE

drawn by: JCH checked by: RCC

date: SEPTEMBER 18, 2017

rev:	date:	description:
	8/17/2017	BID SET
	4/25/2019	RECORD DRAWINGS

THIS DRAWING AND THE DESIGNS, DEPICTIONS, IDEAS AND OTHER INFORMATION CONTAINED HEREIN CONSTITUTE UNPUBLISHED WORK OF tBP/ARCHITECTURE AND SHALL REMAIN PROPERTY OF tBP/ARCHITECTURE IN PERPETUITY. NO PART THEREOF SHALL BE REPRODUCED, DISCLOSED, DISTRIBUTED, SOLD, PUBLISHED OR OTHERWISE USED IN ANY WAY WITHOUT THE ADVANCED EXPRESS WRITTEN CONSENT OF tBP/ARCHITECTURE.

drawing title:
HVAC SCHEDULES, LEGENDS & GENERAL NOTES

drawing no.:
M0.1

drawing of

Record Dwgs

AIR CONDITIONING UNIT SCHEDULE

UNIT	SERVES	"CARRIER" MODEL NO. U.N.O.	NOM. TONS	CFM	MIN. O.A. (CFM)	ESP (IN. W.G.)	DX COOLING SENSIBLE CAPACITY (MBH)	DX COOLING TOTAL CAPACITY (MBH)	DX COOLING EVAP. EDB (°F)	DX COOLING EVAP. EWB (°F)	GAS HEATING INPUT (MBH)	GAS HEATING OUTPUT (MBH)	GAS HEATING HX EDB (°F)	ELECTRICAL DATA VOLT/PH	SUPPLY FAN BHP	SUPPLY FAN FLA	COMPRESSOR QTY	COMPRESSOR RLA	COMPRESSOR LRA	COND. FAN QTY	COND. FAN FLA	PWR. EXH. FAN HP	PWR. EXH. FAN FLA	MCA	MOCP	SEER (EER)	AFUE (%)	OPER. WT. (LBS.)	MOUNTING DETAIL	CONTROL DIAGRAM	NOTES
AC 2-1	OFFICES 237	48LCL004A2A6-0A0A0	3	1200	120	0.8	27.1	32.4	77.0	62.8	60.0	49.0	66.0	460/3	1.7	2.9	1	5.70	38.0	1	--	1/2	1.4	12.0	15.0	15.5	80.6	1105	2/M5.1	1/M6.1	1 2 3 4
AC 2-2	SKILLS LAB 239A	48LCL005A2A6-0A0A0	4	1700	UPPER 440 LOWER 180	0.8	40.4	43.4	80.2	63.2	60.0	49.0	59.6	460/3	1.7	2.9	1	6.40	41.0	1	--	1/2	1.4	13.0	15.0	16.4	80.6	1109	2/M5.1	1/M6.1	1 2 3 4 5 6 8
AC 2-3	LOBBY 239 & LAB PREP 239C	48LCL004A2A6-0A0A0	3	1200	150	0.8	27.6	32.5	77.5	62.9	60.0	49.0	65.0	460/3	1.7	2.9	1	5.70	38.0	1	0.60	1/2	1.1	12.0	15.0	15.5	80.6	1105	2/M5.1	1/M6.1	1 2 3 4
AC 2-4	MATH LAB 202	48LCL006A2A6-0A0A0	5	2000	UPPER 735 LOWER 165	0.8	55.0	55.0	82.4	63.5	60.0	49.0	58.0	460/3	1.7	9.4	1	7.60	52.0	1	1.00	1/2	1.1	15.0	20.0	16.2	80.6	1200	2/M5.1	1/M6.1	1 2 3 4 5 6 7 8

NOTES:

1. UNITS SELECTED AT 95°F DB / 65°F WB SUMMER AMBIENT, 30°F DB WINTER AMBIENT AIR TEMPERATURES. COOLING CAPACITIES SCHEDULED ARE NET SENSIBLE & NET TOTAL CAPACITIES. OPERATING WEIGHT SCHEDULED INCLUDES AC UNIT, 100% MODULATING POWER EXHAUST ECONOMIZER, AND ROOF CURB.
2. PROVIDE UNIT WITH 2" MERV 13 DISPOSABLE PLEATED MEDIA FILTER(S).
3. PROVIDE UNIT WITH "MICROMETL" 100% MODULATING POWER EXHAUST ECONOMIZER WITH VFD, STATIC PRESSURE TRANSMITTER, "BELIMO" LF SERIES ACTUATORS & LOW VOLTAGE INTERFACE STRIP FOR DDC TIE-IN. UNIT SHALL BE WIRED FOR SINGLE POINT POWER CONNECTION THRU AC UNIT. UNIT MCA DOES NOT INCLUDE POWER EXHAUST FAN FLA.
4. PROVIDE UNIT WITH THRU THE BASE GAS/ELEC CONNECTION KIT AND "MASON" ISC SEISMIC ROOFTOP SPRING CURB, 2" DEFLECTION, 21" TALL.
5. PROVIDE CO2 DEMAND CONTROLLED VENTILATION, SEE CONTROL SEQUENCE FOR REQUIRED OPERATION.
6. PROVIDE UNIT WITH FACTORY INSTALLED VFD ON SUPPLY FAN FOR SINGLE ZONE VAV OPERATION. SEE CONTROLS FOR SEQUENCE OF OPERATION.
7. SUPPLY AIR DUCT SMOKE DETECTOR IS NOT REQUIRED AT THIS UNIT PER 2016 CMC, SECTION 608, EXCEPTION 2: ALL ROOMS HAVE DIRECT EXIT TO OUTSIDE WITH TRAVEL DISTANCE LESS THAN 100 FEET.
8. LOWER OUTSIDE AIR POSITION INDICATED IS BASED ON 0.15 CFM/SQ.FT., ALLOWABLE FOR CO2 DEMAND CONTROLLED SYSTEMS AT MINIMUM OCCUPANCY. UPPER OUTSIDE AIR POSITION INDICATED IS BASED ON 15 CFM/OCCUPANT WHEN SPACE IS AT MAXIMUM OCCUPANCY, UNLESS SYSTEM IS IN ECONOMIZER MODE. SEE CONTROLS FOR SEQUENCE OF OPERATION. FOR THESE UNITS WITH CO2 CONTROL, ENTERING TEMPERATURES SCHEDULED REPRESENT CONDITIONS AT UPPER OSA POSITION.

EXISTING VAV BOX SCHEDULE

UNIT	LOCATION SERVED	INLET SIZE (IN.)	VAV MAX. COOLING CFM	VAV MIN. DEADBAND CFM	VAV MAX. HEATING CFM	CO2 CONTROL	NOTES
(E) VAV 2A	CLASSROOM 201A	8	900	330	450	N	1
(E) VAV 2B	NURSE READ STUDY 201C	6	350	90	175	N	1
(E) VAV 2C	CLASSROOM 201B & LOBBY 291	8	1200	330	600	N	1
(E) VAV 2D	OFFICES 237A & 237B	5	325	60	115	N	1
(E) VAV 2E	CLASSROOM 212	12	1600	325	800	N	1
(E) IB 1A	CUSTODIAL STORAGE 117B	12	1975	395	990	N	1
(E) IB 1B	CUSTODIAL OFFICES 117	12	1650	350	825	N	1
(E) IB 3	CLASSROOM 137	12	950	230	475	N	1

NOTES:

1. REPLACE EXISTING PNEUMATIC CONTROLS WITH DDC TYPE, SEE DETAIL 2/M6.1.

VAV BOX SCHEDULE

UNIT	LOCATION SERVED	"TITUS" DESV SIZE (IN.)	VAV MAX. COOLING CFM	VAV MIN. DEADBAND CFM	VAV MAX. HEATING CFM	MIN. OA AREA	MIN. OA OCC	TPD (IN. W.G.)	NC (dB) DISCHARGE	NC (dB) RADIATED	CO2 CONTROL	HEATING ROWS	HEATING CFM	HEATING EAT (°F)	HEATING LAT (°F)	HEATING GPM	HEATING EWT (°F)	HEATING LWT (°F)	HEATING CAPACITY (MBH)	TCV TYPE	TCV CV	NOTES
VAV 239D	CLASSROOM 239D	14	1600	450	800	320	375	0.36	20	26	N	2	800	55.0	85.0	1.75	180	140	25.9	2-WAY	1.2	1 2 3 4 5
VAV 239E	SIM LAB 239E	6	400	80	200	35	45	0.39	25	28	N	2	200	55.0	85.0	0.5	180	140	6.5	2-WAY	0.4	1 2 3 4 5
VAV 239F	SIM LAB 239F & CONTROL RM 239G	8	700	145	350	60	75	0.24	27	27	N	2	350	55.0	85.0	0.75	180	140	11.3	2-WAY	0.5	1 2 3 4 5
VAV 203	CLASSROOM 203	12	1400	615	700	270	615	0.17	25	28	N	2	700	55.0	85.0	1.25	180	140	16.8	2-WAY	0.9	1 2 3 4 5
VAV 204	OPEN OFFICE 204	6	500	100	250	60	90	0.29	25	26	N	2	250	55.0	85.0	0.5	180	140	2.2	2-WAY	0.4	1 2 3 4 5

NOTES:

1. FOR CONTROL DIAGRAM SEE 2/M6.1
2. PROVIDE WITH MFR'S AIRFLOW SENSOR.
3. PROVIDE WITH FIBERGLASS DUCT LINER.
4. PROVIDE WITH MANUFACTURER'S INTEGRAL SOUND ATTENUATOR, OR MIN. 5 FOOT LENGTH OF LINED DUCT ON DISCHARGE SIDE OF EACH VAV BOX, FULL SIZE OF BOX CONNECTION.
5. PROVIDE MINIMUM LENGTH OF 2X THE DUCT DIAMETER STRAIGHT DUCT PRIOR TO THE INLET.

DIFFUSER, REGISTER & GRILLE SCHEDULE

SYMBOL	DESCRIPTION	KRUEGER	METALAIRE	NAILOR	TITUS	TUTTLE & BAILEY
CD	MODULAR CORE SURFACE MOUNT CEILING DIFFUSER BEVEL FRAME 3/4" DROP	1240 FRAME 21 - 1-1/4"	9000-2	7500-S	MCD BORDER TYPE 6	SQD-SB
CDL	MODULAR CORE LAY-IN CEILING DIFFUSER FOR T-BAR CEILING 24x24 PANEL	1240 FRAME 23	9000-6P	7500-L	MCD BORDER TYPE 3	SQD-LT
CR	CEILING RETURN WITH 1/2" EGG CRATE CORE SURFACE MOUNT	EGC-5	CC5D	61 EC-S	MODEL 50 F BORDER TYPE 1	CRE500-SF
CRL	CEILING RETURN WITH 1/2" EGG CRATE CORE IN 24x24 PANEL FOR T-BAR CEILING	EGC-5TB	CC5D-TBD	61 EC-L	MODEL 50 F BORDER TYPE 3	CRE500-LT
S*	DOUBLE DEFLECTION SUPPLY GRILLE WITH VERTICAL FRONT BARS, 3/4" SPACING	880 V	V 4004 S	61 DV	300 RS	T54
R & E*	RETURN OR EXHAUST GRILLE WITH 35° OR 45° HORIZONTAL BARS.	S 80 H	SRH	7145 H	350 RL	T70D

NOTES:

1. ALL SYMBOLS NOTED MAY NOT BE USED. REFER TO PLANS FOR SIZE AND QUANTITY.
2. ALL SUPPLY AIR DIFFUSERS ARE 4 WAY BLOW UNLESS SHOWN OTHERWISE.
3. FURNISH ALL PRODUCTS OF A SINGLE MANUFACTURER.

* ALUMINUM REGISTERS FOR SHOWERS AND DAMP AREAS

4. COORDINATE DIFFUSER TYPE WITH REFLECTED CEILING PLAN.
5. OPPOSED BLADE DAMPERS ARE NOT REQUIRED AT DIFFUSERS, REGISTERS OR GRILLES.
6. PROVIDE MANUAL AIR DAMPERS AT EACH BRANCH DUCT TO A SINGLE DIFFUSER, REGISTER OR GRILLE.

INDUCTION BOX SCHEDULE

UNIT	LOCATION SERVED	"PRICE" IDV SIZE (IN.)	VAV MAX. COOLING CFM	VAV MIN. DEADBAND CFM	VAV MAX. HEATING CFM	MIN. OA AREA	MIN. OA OCC	TPD (IN. W.G.)	NC (dB) DISCHARGE	NC (dB) RADIATED	CO2 CONTROL	HEATING ROWS	HEATING CFM	HEATING EAT (°F)	HEATING LAT (°F)	HEATING GPM	HEATING EWT (°F)	HEATING LWT (°F)	HEATING CAPACITY (MBH)	TCV TYPE	TCV CV	NOTES
IB 3A	CLASSROOM 140	10	950	330	475	260	330	0.36	--	--	N	2	475	55.0	85.0	1.0	180	140	15.4	2-WAY	0.4	1 2 3 4 5

NOTES:

1. FOR CONTROL DIAGRAM SEE 2/M6.1
2. PROVIDE WITH MFR'S AIRFLOW SENSOR.
3. PROVIDE WITH FIBERGLASS DUCT LINER.
4. PROVIDE WITH MANUFACTURER'S INTEGRAL SOUND ATTENUATOR, OR MIN. 5 FOOT LENGTH OF LINED DUCT ON DISCHARGE SIDE OF EACH VAV BOX, FULL SIZE OF BOX CONNECTION.
5. PROVIDE MINIMUM LENGTH OF 2X THE DUCT DIAMETER STRAIGHT DUCT PRIOR TO THE INLET.

DUCTLESS SPLIT SYSTEM AIR CONDITIONING (COOLING ONLY) UNIT SCHEDULE

UNIT	SERVES	"MITSUBISHI" MODEL NO. (INDOOR UNIT)	CFM	ELECTRICAL DATA VOLT/PH	ELECTRICAL DATA FAN FLA	ELECTRICAL DATA MCA	OPER. WT. (LBS.)	MOUNTING DETAIL	UNIT	"MITSUBISHI" MODEL NO. (OUTDOOR UNIT)	TOTAL COOLING CAPACITY (MBH)	REFRIG. PIPE RS (DIA.)	REFRIG. PIPE RL (DIA.)	ELECTRICAL DATA VOLT/PH	FAN FLA	COMPRESSOR RLA	COMPRESSOR LRA	MCA	MOCP	SEER	OPER. WT. (LBS.)	MOUNTING DETAIL	CONTROL DIAGRAM	NOTES
SAC 117G	GENERAL DATA 117G	PKA-A18HA	380	208/1ø	0.33	1.0	35	3/M5.1	SCU 117G	PUY-A18NHA	18.0	1/2"	1/4"	208/1ø	0.35	12.0	14.0	13.0	20	15.3	100	4/M5.1	4/M6.1	1 2 3 4 5
SAC 230	TELEPHONE 230	PKA-A12HA	380	208/1ø	0.33	1.0	35	3/M5.1	SCU 230	PUY-A12NHA	12.0	1/2"	1/4"	208/1ø	0.35	12.0	14.0	13.0	20	15.2	90	4/M5.1	4/M6.1	1 2 3 4 5

NOTES:

1. R-410A REFRIGERANT.
2. PROVIDE WITH FACTORY WASHABLE FILTERS.
3. POWER FOR INDOOR UNIT SUPPLIED FROM RESPECTIVE OUTDOOR UNIT.
4. PROVIDE WITH MANUFACTURERS HARD WIRED WALL MOUNTED PROGRAMABLE THERMOSTAT.
5. EMS SYSTEM SHALL MONITOR SPACE TEMPERATURE.

EXHAUST FAN SCHEDULE

UNIT	SERVES	"GREENHECK" MODEL NO. U.N.O.	CFM	SP (IN. W.G.)	DUTY	STYLE	RPM	HP (WATTS)	VOLT/PH	OPER. WT. (LBS.)	INTERLOCK TO RUN WITH	MOUNTING DETAIL	CONTROL DIAGRAM	NOTES
EF 117D	CUSTODIAL STORAGE 117D	SP-A900	750	0.375	E	CAB	950	(285)	120/1	60	TIME CLOCK	12/M5.1	3/M6.1	1 2 3

DUTY: E- EXHAUST
STYLE: CAB- IN-LINE CABINET

NOTES:

1. PROVIDE WITH THERMAL OVERLOAD PROTECTED ECM MOTOR.
2. PROVIDE WITH BACKDRAFT DAMPER.
3. PROVIDE WITH SPEED CONTROLLER, FACTORY MOUNTED AND WIRED IN FAN HOUSING.

tBP
architecture
planning
interiors

tBP/Architecture
1777 Oakland Boulevard, Suite 320
Walnut Creek, CA 94596
ph: 925.246.6418

architect

DATE SIGNED: 03/21/18
CAPITAL ENGINEERING CONSULTANTS, INC.
RANCHO CORDOVA, CALIFORNIA
TD - RCC/MJR/JCH 160781.00
PM - DESIGN TEAM PROJECT NO.

consultant

IDENTIFICATION STAMP
DIV. OF THE STATE ARCHITECT
OFFICE OF REGULATION SERVICES
APPL # 01-
FILE NO. 7-C1
AC ___ RS ___ SS ___
DATE ___

DIVISION OF THE STATE ARCHITECT
1515 CLAY STREET
OAKLAND, CA94612
ph:(510) 622-3101

agency

C-4008 APPLIED ARTS & ADMIN RENOVATION
2600 MISSION BELL DRIVE, SAN PABLO, CA 94806

CONTRA COSTA COMMUNITY COLLEGE DISTRICT
500 COURT STREET MARTINEZ, CA 94553

owner

tBP project number:	20865.00
scale:	NONE
drawn by:	JCH checked by: RCC
date:	SEPTEMBER 18, 2017

rev:	date:	description:
	8/17/2017	BID SET
1	9/18/2017	ADDENDUM A
10	3/16/2018	ASI 10
	4/25/2019	RECORD DRAWINGS

THIS DRAWING AND THE DESIGNS, DEPICTIONS, IDEAS AND OTHER INFORMATION CONTAINED HEREIN CONSTITUTE UNPUBLISHED WORK OF tBP/ARCHITECTURE AND SHALL REMAIN PROPERTY OF tBP/ARCHITECTURE IN PERPETUITY. NO PART THEREOF SHALL BE REPRODUCED, DISCLOSED, DISTRIBUTED, SOLD, PUBLISHED OR OTHERWISE USED IN ANY WAY WITHOUT THE ADVANCED EXPRESS WRITTEN CONSENT OF tBP/ARCHITECTURE.

drawing title:
HVAC SCHEDULES, LEGENDS & GENERAL NOTES

drawing no.:
M0.2

drawing of

Record Dwgs

QC	
INI	%

STATE OF CALIFORNIA

REQUIRED ACCEPTANCE TESTS

CEC-NRCC-MCH-04-E (Revised 01/16) CALIFORNIA ENERGY COMMISSION

CERTIFICATE OF COMPLIANCE	NRCC-MCH-04-E
Required Acceptance Tests	(Page 1 of 3)
Project Name: Contra Costa Applied Arts & Admin Renovation	Date Prepared: 3/17/2017

A. MECHANICAL COMPLIANCE FORMS & WORKSHEETS

(indicate if worksheet is included)

For detailed instructions on the use of this and all Energy Standards compliance documents, refer to the 2016 Nonresidential Manual
Note: The Enforcement Agency may require all compliance documents to be incorporated onto the building plans. The NRCC-MCH-04-E and NRCC-MECH-05-E are alternative compliance documents to NRCC-MCH-01-E, NRCC-MCH-02-E and NRCC-MCH-03-E for projects using only single zone packaged HVAC systems.

YES	NO	Form	Title
✓		NRCC-MCH-04-E (1 of 2)	Certificate of Compliance. Required on plans when used.
✓		NRCC-MCH-04-E (2 of 2)	Mechanical Acceptance Tests. Required on plans when used.
✓		NRCC-MCH-05-E (1 of 2)	HVAC Prescriptive Requirements. It is required on plans when used.
✓		NRCC-MCH-05-E (2 of 2)	Mechanical SWH Equipment Summary is required for all submittals with service water heating, pools or spas. It is required on plans where applicable.

STATE OF CALIFORNIA

REQUIRED ACCEPTANCE TESTS

CEC-NRCC-MCH-04-E (Revised 01/16) CALIFORNIA ENERGY COMMISSION

CERTIFICATE OF COMPLIANCE	NRCC-MCH-04-E
Required Acceptance Tests	(Page 2 of 3)
Project Name: Contra Costa Applied Arts & Admin Renovation	Date Prepared: 3/17/2017

Designer:
This compliance document is to be used by the designer and attached to the plans. Listed below are all the acceptance tests for mechanical systems. The designer is required to check the applicable boxes by all acceptance tests that apply and list all equipment that require an acceptance test. If all equipment of a certain type requires a test, list the equipment description and the number of systems. The NA number designates the Section in the Appendix of the Nonresidential Reference Appendices Manual that describes the test. Since this compliance document will be part of the plans, completion of this section will allow the responsible party to budget for the scope of work appropriately.

Enforcement Agency:
Systems Acceptance. Before occupancy permit is granted for a newly constructed building or space, or a new space-conditioning system serving a building or space is operated for normal use, all control devices serving the building or space shall be certified as meeting the Acceptance Requirements for Code Compliance.

Systems Acceptance. Before occupancy permit is granted. All newly installed HVAC equipment must be tested using the Acceptance Requirements.
The NRCC-MCH-04-E compliance document is not considered a completed document and is not to be accepted by the building department unless the correct boxes are checked. The equipment requiring testing, person performing the test (Example: HVAC installer, TAB contractor, controls contractor, PE in charge of project) and what Acceptance test must be conducted. The following checked-off forms are required for ALL newly installed and replaced equipment. In addition a Certificate of Acceptance documents shall be submitted to the building department that certifies plans, specifications, installation certificates, and operating and maintenance information meet the requirements of Section 10-103(b) and Title 24 Part 6. The building inspector must receive the properly filled out and signed compliance documents before the building can receive final occupancy.

Test Description		MCH-02-A	MCH-03-A	MCH-04-A	MCH-05-A	MCH-06-A	MCH-07-A	MCH-11-A	MCH-12-A	MCH-14-A	MCH-18-A	Test Performed By:
Equipment Requiring Testing or Verification	# of Units	Outdoor Air	Single Zone Unitary	Air Distribution Ducts	Economizer Controls	Demand Control Ventilation (DCV)	Supply Fan VAV	Automatic Demand Shed Control	FDD for Packaged DX Units	Distributed Energy Storage DX AC Systems	Energy Management Control System	
TRANE YH(	2	✓	✓		✓		✓					
TRANE YH(	1	✓	✓		✓		✓					
TRANE YH(	1	✓	✓		✓		✓		✓			
MITSUBISH	1	✓	✓									

STATE OF CALIFORNIA

REQUIRED ACCEPTANCE TESTS

CEC-NRCC-MCH-04-E (Revised 01/16) CALIFORNIA ENERGY COMMISSION

CERTIFICATE OF COMPLIANCE	NRCC-MCH-04-E
Required Acceptance Tests	(Page 3 of 3)
Project Name: Contra Costa Applied Arts & Admin Renovation	Date Prepared: 3/17/2017

DOCUMENTATION AUTHOR'S DECLARATION STATEMENT

1. I certify that this Certificate of Compliance documentation is accurate and complete.

Documentation Author Name: Aaron Wintersmith	Documentation Author Signature:
Company: Capital Engineering Consultants Inc.	Signature Date: 3/17/2017
Address: 11020 Sun Center Drive # 100	CEA/HERS Certification Identification (if applicable):
City/State/Zip: Rancho Cordova , CA 95670	Phone: (916) 851-3500

RESPONSIBLE PERSON'S DECLARATION STATEMENT

I certify the following under penalty of perjury, under the laws of the State of California:

1. The information provided on this Certificate of Compliance is true and correct.
2. I am eligible under Division 3 of the Business and Professions Code to accept responsibility for the building design or system design identified on this Certificate of Compliance (responsible designer).
3. The energy features and performance specifications, materials, components, and manufactured devices for the building design or system design identified on this Certificate of Compliance conform to the requirements of Title 24, Part 1 and Part 6 of the California Code of Regulations.
4. The building design features or system design features identified on this Certificate of Compliance are consistent with the information provided on other applicable compliance documents, worksheets, calculations, plans and specifications submitted to the enforcement agency for approval with this building permit application.
5. I will ensure that a completed signed copy of this Certificate of Compliance shall be made available with the building permit(s) issued for the building, and made available to the enforcement agency for all applicable inspections. I understand that a completed signed copy of this Certificate of Compliance is required [illegible] ntation the builder provides to the building owner at occupancy.

Responsible Designer Name: Thomas A. Duval	Responsible Designer Signature:
Company: Capital Engineering Consultants, Inc.	Date Signed:
Address: 11020 Sun Center Dr. Suite 100	License: M22836
City/State/Zip: Rancho Cordova, CA 95670	Phone: (916) 851-3500

STATE OF CALIFORNIA

REQUIREMENTS FOR PACKAGED SINGLE ZONE UNITS

CEC-NRCC-MCH-05-E (Revised 01/16) CALIFORNIA ENERGY COMMISSION

CERTIFICATE OF COMPLIANCE	NRCC-MCH-05-E
Requirements for Packaged Single-Zone Units	(Page 1 of 2)
Project Name: Contra Costa Applied Arts & Admin Renovation	Date Prepared: 3/17/2017

Equipment Tag(s)[1]		AC 2-1		AC 2-2		AC 2-3	
MANDATORY MEASURES	*T-24 Sections*	*Requirement[3]*	*As Scheduled[3]*	*Requirement[3]*	*As Scheduled[3]*	*Requirement[3]*	*As Scheduled[3]*
Heating Equipment Efficiency[4]	110.1 or 110.2(a)	78% AFUE	81% AFUE	78% AFUE	81% AFUE	78% AFUE	81% AFUE
Cooling Equipment Efficiency[4]	110.1 or 110.2(a)	13 SEER	17.5 SEER / 12	13 SEER	17.5 SEER / 12	13 SEER	17.5 SEER / 12.2
Thermostats[5]	110.2(b), 110.2(c)	Setback	Setback	Setback	Setback	Setback	Setback
Furnace Standby Loss Control[6]	110.2(d)	n/a		n/a		n/a	
Low Leakage AHU	110.2(f)	NR	none	NR	none	NR	none
Ventilation[7]	120.1(b)	366	366	720	720	326	326
Demand Control Ventilation[8]	120.1(c)4	NR	No	NR	No	NR	No
Occupant Sensor Ventilation Control[8]	120.1(c)5, 120.2(e)3						
Shutoff and Reset Controls[9]	120.2(e)	Req	Programmable	Req	Programmable :	Req	Programmable S
Outdoor Air and Exhaust Damper Control	120.2(f)	Req	Auto	Req	Auto	Req	Auto
Automatic Demand Shed Controls	120.2(h)	NR	none	NR	none	NR	none
Economizer FDD	120.2(i)	NR		NR		NR	
Duct Insulation	120.4	R-8	R-8.0	R-8	R-8.0	R-8	R-8.0
PRESCRIPTIVE MEASURES							
Equipment is sized in conformance with 140.4 (a & b)	140.4(a & b)	27,763 Btu/hr 31,438 Btu/hr	48,000 Btu/hr 30,493 Btu/hr	48,032 Btu/hr 47,995 Btu/hr	48,000 Btu/hr 47,591 Btu/hr	25,563 Btu/hr 29,120 Btu/hr	48,000 Btu/hr 29,941 Btu/hr
Economizer	140.4(e)	NR	Diff. Temp (Inte	NR	Diff. Temp (Inte	NR	Diff. Temp (Integ
Electric Resistance Heating[10]	140.4(g)	No	No	No	No	No	No
Duct Leakage Sealing and Testing.[11]	140.4(l)	NR	No	NR	No	NR	No

Notes:

1. *Provide equipment tags (e.g. AC1 or AC1 to 10). Multiple units of the same make and model with the same application and accessories can be grouped together.*
2. *Enter the following information as appropriate: Unit Manufacturer; Unit Model Number (including all accessories); Description of the unit (e.g. gas-pack or heat pump; rated heating capacity (enter "N/A" if no heating); and, rated cooling capacity (enter "N/A" if no cooling). For unit capacities include the units (e.g. kBtuh or tons).*
3. *For each requirement, enter the minimum requirement from the Standard in the left column (under "Standard Requirement"). In the right column (under "As Scheduled") enter the value for the units as specified.*
4. *Where there is more than one requirement (e.g. full and part load efficiency) enter both with the appropriate labels (e.g. COP and IEER).*
5. *In the left column identify the thermostatic requirements from the standard (e.g. programmable setback thermostat or heat pump with electric heat), . In the right column indicate the capabilities of the thermostat as scheduled.*
6. *If the unit has a furnace which is rated at ≥225,000 Btuh of capacity, indicate the rated standby loss and ignition source (e.g. IID). If there is no furnace or the unit is rated for <225,000 Btuh indicate "N/A".*
7. *In the left column, enter both the required ventilation value from Table 120.1A and for the number of occupants times 15 cfm/person. In the right column enter the actual minimum ventilation as scheduled. If the space is naturally ventilated enter "N/A" in the left column and "the space is naturally ventilated" in the right column.*
8. *If the space is required to have either DCV or Occupant Sensor Ventilation Control indicate "required" in the left column (otherwise indicate "N/A" in the left column). If either DCV or Occupant Sensor Ventilation Control is provided indicate "provided" in the right column (otherwise indicate "N/A" in the right column)*
9. *In the left column indicate the required time controls from the standard. In the right column identify the device that provides this functionality (e.g. EMCS or programmable timeclock).*
10. *Enter N/A if there is no electric heating. If the system has electric heating indicate which exception to 140.4(g) applies.*
11. *If duct leakage sealing and testing is required, a **MCH-04-A** compliance document must be submitted.*

STATE OF CALIFORNIA

REQUIREMENTS FOR PACKAGED SINGLE ZONE UNITS

CEC-NRCC-MCH-05-E (Revised 01/16) CALIFORNIA ENERGY COMMISSION

CERTIFICATE OF COMPLIANCE	NRCC-MCH-05-E
Requirements for Packaged Single-Zone Units	(Page 1 of 2)
Project Name: Contra Costa Applied Arts & Admin Renovation	Date Prepared: 3/17/2017

Equipment Tag(s)[1]		AC 2-4		SAC 117G			
MANDATORY MEASURES	*T-24 Sections*	*Requirement[3]*	*As Scheduled[3]*	*Requirement[3]*	*As Scheduled[3]*	*Requirement[3]*	*As Scheduled[3]*
Heating Equipment Efficiency[4]	110.1 or 110.2(a)	78% AFUE	81% AFUE	n/a	n/a		
Cooling Equipment Efficiency[4]	110.1 or 110.2(a)	13 SEER	17.5 SEER / 12	14 SEER	14.1 SEER / 12		
Thermostats[5]	110.2(b), 110.2(c)	Setback	Setback	Setback	Setback		
Furnace Standby Loss Control[6]	110.2(d)	n/a		n/a			
Low Leakage AHU	110.2(f)	NR	none	NR	none		
Ventilation[7]	120.1(b)	394	394	54	54		
Demand Control Ventilation[8]	120.1(c)4	NR	No	NR	No		
Occupant Sensor Ventilation Control[8]	120.1(c)5, 120.2(e)3						
Shutoff and Reset Controls[9]	120.2(e)	Req	Programmable	Req	Programmable :		
Outdoor Air and Exhaust Damper Control	120.2(f)	Req	Auto	Req	Auto		
Automatic Demand Shed Controls	120.2(h)	NR	none	NR	none		
Economizer FDD	120.2(i)	Req		NR			
Duct Insulation	120.4	R-8	R-8.0	n/a	none		
PRESCRIPTIVE MEASURES							
Equipment is sized in conformance with 140.4 (a & b)	140.4(a & b)	43,130 Btu/hr 56,201 Btu/hr	48,000 Btu/hr 55,629 Btu/hr	2,566 Btu/hr 14,867 Btu/hr	0 Btu/hr 15,840 Btu/hr		
Economizer	140.4(e)	Req	Diff. Temp (Inte	NR	No Economizer		
Electric Resistance Heating[10]	140.4(g)	No	No	No	No		
Duct Leakage Sealing and Testing.[11]	140.4(l)	NR	No	NR	No		

Notes:

1. *Provide equipment tags (e.g. AC1 or AC1 to 10). Multiple units of the same make and model with the same application and accessories can be grouped together.*
2. *Enter the following information as appropriate: Unit Manufacturer; Unit Model Number (including all accessories); Description of the unit (e.g. gas-pack or heat pump; rated heating capacity (enter "N/A" if no heating); and, rated cooling capacity (enter "N/A" if no cooling). For unit capacities include the units (e.g. kBtuh or tons).*
3. *For each requirement, enter the minimum requirement from the Standard in the left column (under "Standard Requirement"). In the right column (under "As Scheduled") enter the value for the units as specified.*
4. *Where there is more than one requirement (e.g. full and part load efficiency) enter both with the appropriate labels (e.g. COP and IEER).*
5. *In the left column identify the thermostatic requirements from the standard (e.g. programmable setback thermostat or heat pump with electric heat), . In the right column indicate the capabilities of the thermostat as scheduled.*
6. *If the unit has a furnace which is rated at ≥225,000 Btuh of capacity, indicate the rated standby loss and ignition source (e.g. IID). If there is no furnace or the unit is rated for <225,000 Btuh indicate "N/A".*
7. *In the left column, enter both the required ventilation value from Table 120.1A and for the number of occupants times 15 cfm/person. In the right column enter the actual minimum ventilation as scheduled. If the space is naturally ventilated enter "N/A" in the left column and "the space is naturally ventilated" in the right column.*
8. *If the space is required to have either DCV or Occupant Sensor Ventilation Control indicate "required" in the left column (otherwise indicate "N/A" in the left column). If either DCV or Occupant Sensor Ventilation Control is provided indicate "provided" in the right column (otherwise indicate "N/A" in the right column)*
9. *In the left column indicate the required time controls from the standard. In the right column identify the device that provides this functionality (e.g. EMCS or programmable timeclock).*
10. *Enter N/A if there is no electric heating. If the system has electric heating indicate which exception to 140.4(g) applies.*
11. *If duct leakage sealing and testing is required, a **MCH-04-A** compliance document must be submitted.*

STATE OF CALIFORNIA

REQUIREMENTS FOR PACKAGED SINGLE ZONE UNITS

CEC-NRCC-MCH-05-E (Revised 01/16) CALIFORNIA ENERGY COMMISSION

CERTIFICATE OF COMPLIANCE	NRCC-MCH-05-E
Requirements for Packaged Single-Zone Units	(Page 2 of 2)
Project Name: Contra Costa Applied Arts & Admin Renovation	Date Prepared: 3/17/2017

DOCUMENTATION AUTHOR'S DECLARATION STATEMENT

1. I certify that this Certificate of Compliance documentation is accurate and complete.

Documentation Author Name: Aaron Wintersmith	Documentation Author Signature:
Company: Capital Engineering Consultants Inc.	Signature Date: 3/17/2017
Address: 11020 Sun Center Drive # 100	CEA/HERS Certification Identification (if applicable):
City/State/Zip: Rancho Cordova , CA 95670	Phone: (916) 851-3500

RESPONSIBLE PERSON'S DECLARATION STATEMENT

I certify the following under penalty of perjury, under the laws of the State of California:

1. The information provided on this Certificate of Compliance is true and correct.
2. I am eligible under Division 3 of the Business and Professions Code to accept responsibility for the building design or system design identified on this Certificate of Compliance (responsible designer).
3. The energy features and performance specifications, materials, components, and manufactured devices for the building design or system design identified on this Certificate of Compliance conform to the requirements of Title 24, Part 1 and Part 6 of the California Code of Regulations.
4. The building design features or system design features identified on this Certificate of Compliance are consistent with the information provided on other applicable compliance documents, worksheets, calculations, plans and specifications submitted to the enforcement agency for approval with this building permit application.
5. I will ensure that a completed signed copy of this Certificate of Compliance shall be made available with the building permit(s) issued for the building, and made available to the enforcement agency for all applicable inspections. I understand that a completed signed copy of this Certificate of Compliance is required to be included with the documentation the builder provides to the building owner at occupancy.

Responsible Designer Name: Thomas A. Duval	Responsible Designer Signature:
Company: Capital Engineering Consultants, Inc.	Date Signed:
Address: 11020 Sun Center Dr. Suite 100	License: M22836
City/State/Zip: Rancho Cordova, CA 95670	Phone: (916) 851-3500

tBP architecture planning interiors

tBP/Architecture
1777 Oakland Boulevard, Suite 320
Walnut Creek, CA 94596
ph: 925.246.6419

architect

DATE SIGNED: 03/21/18

CAPITAL ENGINEERING CONSULTANTS, INC.
RANCHO CORDOVA, CALIFORNIA
TD – RCC/MJR/JCH 160761.00
PM – DESIGN TEAM PROJECT NO.

consultant

IDENTIFICATION STAMP
DIV. OF THE STATE ARCHITECT
OFFICE OF REGULATION SERVICES
APPL # 01-
FILE NO. 7-C1
AC ___ FLS ___ SS ___
DATE ___

DIVISION OF THE STATE ARCHITECT
1515 CLAY STREET
OAKLAND, CA94612
ph:(510) 622-3101

agency

C-4008 APPLIED ARTS & ADMIN RENOVATION

2600 MISSION BELL DRIVE, SAN PABLO, CA 94806

CONTRA COSTA COMMUNITY COLLEGE DISTRICT
500 COURT STREET MARTINEZ, CA 94553

owner

tBP project number:	20865.00
scale: NONE	
drawn by: JCH	checked by: RCC
date: SEPTEMBER 18, 2017	

rev:	date:	description:
	8/17/2017	BID SET
	4/25/2019	RECORD DRAWINGS

THIS DRAWING AND THE DESIGNS, DEPICTIONS, IDEAS AND OTHER INFORMATION CONTAINED HEREIN CONSTITUTE UNPUBLISHED WORK OF tBP/ARCHITECTURE AND SHALL REMAIN PROPERTY OF tBP/ARCHITECTURE IN PERPETUITY. NO PART THEREOF SHALL BE REPRODUCED, DISCLOSED, DISTRIBUTED, SOLD, PUBLISHED OR OTHERWISE USED IN ANY WAY WITHOUT THE ADVANCED EXPRESS WRITTEN CONSENT OF tBP/ARCHITECTURE.

drawing title:
TITLE 24 COMPLIANCE FORMS

drawing no.:
M0.3

drawing of

Record Dwgs

QC

INI	%

DEMOLITION GENERAL NOTES:

1. LOCATIONS OF EXISTING EQUIPMENT, DUCTWORK AND PIPING SHOWN ARE APPROXIMATE ONLY AND DO NOT NECESSARILY REPRESENT ALL (E)HVAC COMPONENTS THAT WILL REQUIRE REMOVAL OR ABANDONMENT FOR COMPLETION OF (N)WORK. CONTRACTOR SHALL FIELD VERIFY EXACT LOCATIONS AND NUMBER OF (E)HVAC COMPONENTS IN FIELD PRIOR TO BEGINNING WORK AND PROVIDE ALL NECESSARY DEMOLITION REQUIRED TO COMPLETE (N)HVAC SYSTEM INSTALLATION.

DEMOLITION SHEET NOTES:

1. REMOVE EXISTING DUCTWORK, DIFFUSERS, GRILLES, REGISTERS AND SUPPORTS, TYP.
2. REMOVE EXISTING THERMOSTAT AND RELATED PNEUMATIC CONTROLS, PROVIDE NEW DDC CONTROLS PER 2/M6.1.
3. CAP AND ABANDON EXISTING SA/RA DUCTS UP THROUGH SHAFT TO ROOFTOP AC UNIT.
4. EXISTING INDUCTION BOX TERMINAL UNIT AND ALL RELATED ACCESSORIES TO REMAIN.
5. REMOVE EXISTING FAN COIL UNIT, SUPPORTS, CONTROLS, AND CUT/CAP DX REFRIGERATION PIPING ABOVE CEILING.

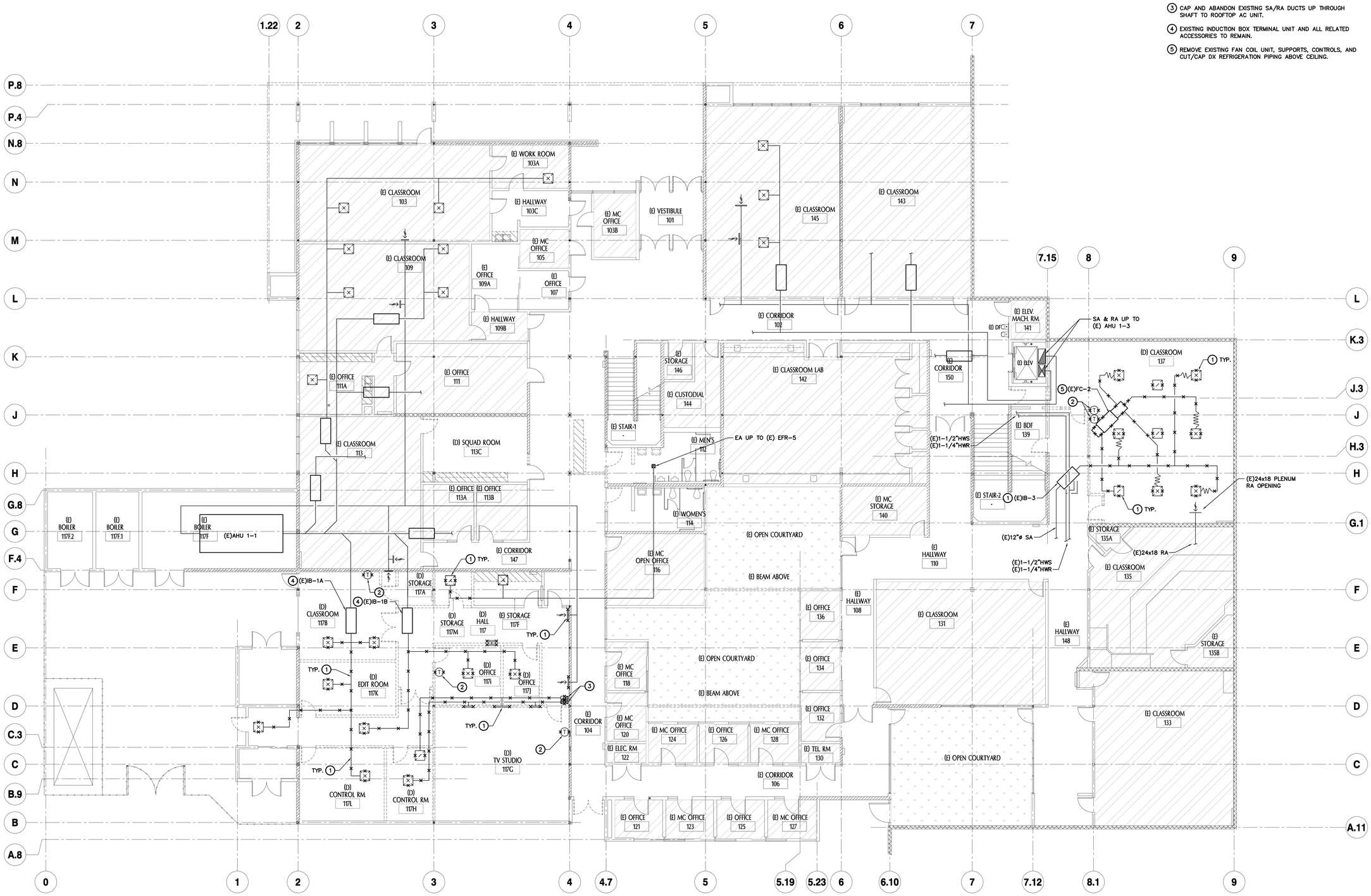

HVAC - FIRST FLOOR DEMOLITION PLAN

SCALE : 1/8" = 1'-0"

1 MD2.1

N

tBP
architecture
planning
interiors

tBP/Architecture
1777 Oakland Boulevard, Suite 320
Walnut Creek, CA 94596
ph: 925.246.6418

architect

DATE SIGNED: 03/21/18

CAPITAL
ENGINEERING CONSULTANTS, INC.
RANCHO CORDOVA, CALIFORNIA

TD – RCC/MJR/JCH 160781.00
PM – DESIGN TEAM PROJECT NO.

consultant

IDENTIFICATION STAMP
DIV. OF THE STATE ARCHITECT
OFFICE OF REGULATION SERVICES
APPL # 01-
FILE NO. 7-C1
AC ___ FCS ___ SS ___
DATE

DIVISION OF THE STATE ARCHITECT
1515 CLAY STREET
OAKLAND, CA94612
ph:(510) 622-3101

agency

C-4008 APPLIED ARTS & ADMIN RENOVATION

2600 MISSION BELL DRIVE, SAN PABLO, CA 94806

CONTRA COSTA COMMUNITY COLLEGE DISTRICT
500 COURT STREET MARTINEZ, CA 94553

owner

tBP project number: 20865.00

scale: 1/8" - 1'0"

drawn by: JCH checked by: RCC

date: SEPTEMBER 18, 2017

rev:	date:	description:
	6/17/2017	BID SET
1	3/16/2018	ASI 10
	4/25/2019	RECORD DRAWINGS

THIS DRAWING AND THE DESIGNS, DEPICTIONS, IDEAS AND OTHER INFORMATION CONTAINED HEREIN CONSTITUTE UNPUBLISHED WORK OF tBP/ARCHITECTURE AND SHALL REMAIN PROPERTY OF tBP/ARCHITECTURE IN PERPETUITY. NO PART THEREOF SHALL BE REPRODUCED, DISCLOSED, DISTRIBUTED, SOLD, PUBLISHED OR OTHERWISE USED IN ANY WAY WITHOUT THE ADVANCED EXPRESS WRITTEN CONSENT OF tBP/ARCHITECTURE.

drawing title:

HVAC FIRST FLOOR DEMO PLAN

drawing no.:

MD2.1

drawing of

Record Dwgs

QC	
INI	%

DEMOLITION GENERAL NOTES:

1. LOCATIONS OF EXISTING EQUIPMENT, DUCTWORK AND PIPING SHOWN ARE APPROXIMATE ONLY AND DO NOT NECESSARILY REPRESENT ALL (E)HVAC COMPONENTS THAT WILL REQUIRE REMOVAL OR ABANDONMENT FOR COMPLETION OF (N)WORK. CONTRACTOR SHALL FIELD VERIFY EXACT LOCATIONS AND NUMBER OF (E)HVAC COMPONENTS IN FIELD PRIOR TO BEGINNING WORK AND PROVIDE ALL NECESSARY DEMOLITION REQUIRED TO COMPLETE (N)HVAC SYSTEM INSTALLATION.

DEMOLITION SHEET NOTES:

1. REMOVE EXISTING DUCTWORK, DIFFUSERS, GRILLES, REGISTERS AND SUPPORTS, TYP.
2. REMOVE EXISTING THERMOSTAT AND RELATED CONTROL WIRING.
3. REMOVE EXISTING WINDOW EXHAUST FAN, SUPPORTS AND CONTROLS. (E) WINDOW FRAMING TO REMAIN, SEE ARCH PLANS.
4. REMOVE EXISTING VAV TERMINAL UNIT, SUPPORTS AND CONTROLS.
5. EXISTING VAV TERMINAL UNIT AND ALL RELATED ACCESSORIES TO REMAIN.

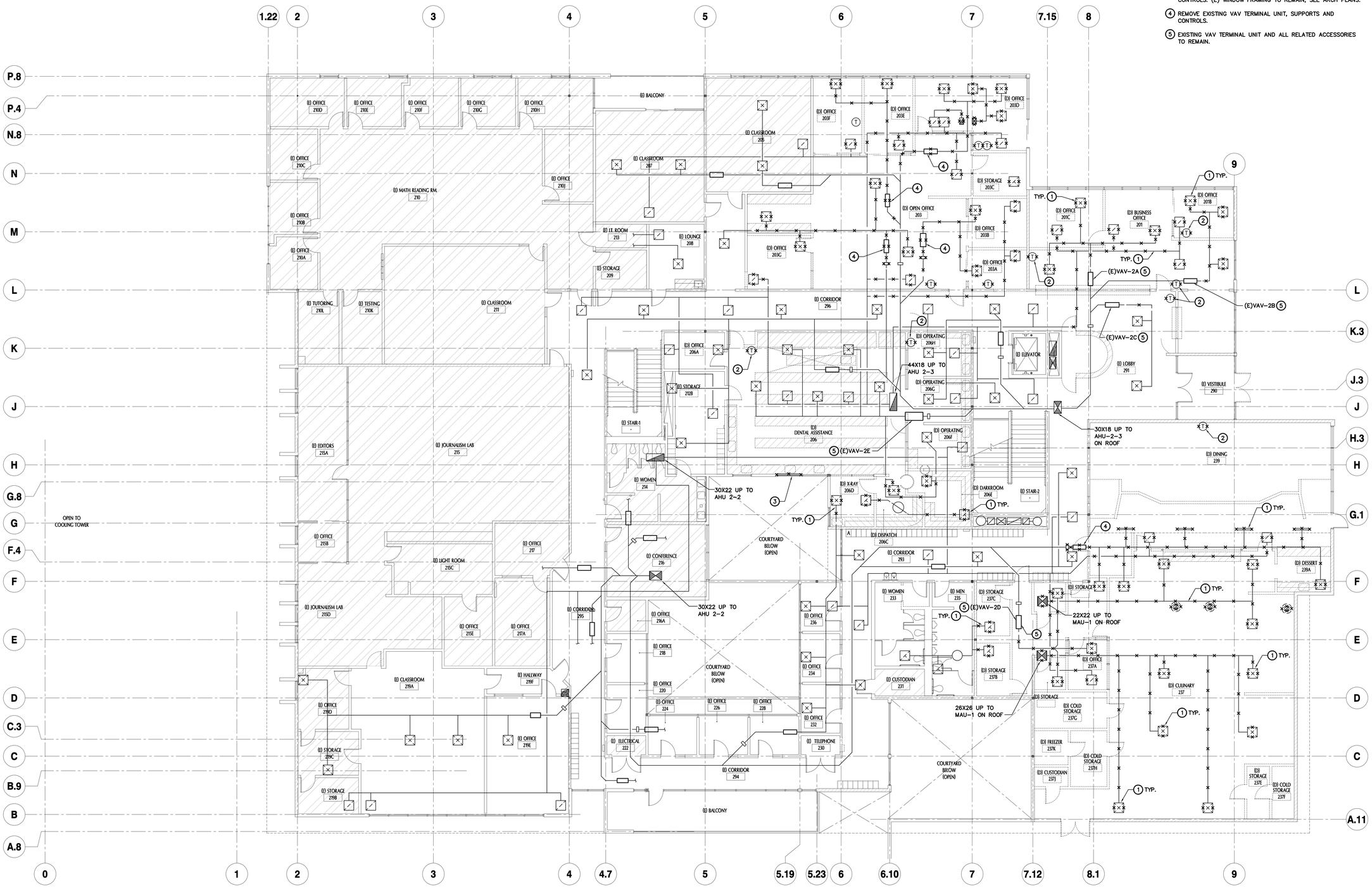

HVAC - SECOND FLOOR DEMOLITION PLAN

1 MD2.2

SCALE : 1/8" = 1'-0"

N

tBP architecture planning interiors

tBP/Architecture
1777 Oakland Boulevard, Suite 320
Walnut Creek, CA 94596
ph: 925.246.6418

architect

DATE SIGNED: 03/21/18

CAPITAL ENGINEERING CONSULTANTS, INC.
RANCHO CORDOVA, CALIFORNIA

TD – RCC/MJR/JCH 160781.00
PM – DESIGN TEAM PROJECT NO.

consultant

IDENTIFICATION STAMP
DIV. OF THE STATE ARCHITECT
OFFICE OF REGULATION SERVICES
APPL # 01-
FILE NO. 7-C1
AC ___ KS ___ SS ___
DATE ___

DIVISION OF THE STATE ARCHITECT
1515 CLAY STREET
OAKLAND, CA94612
ph:(510) 622-3101

agency

C-4008 APPLIED ARTS & ADMIN RENOVATION

2600 MISSION BELL DRIVE, SAN PABLO, CA 94806

CONTRA COSTA COMMUNITY COLLEGE DISTRICT
500 COURT STREET MARTINEZ, CA 94553

owner

tBP project number: 20865.00

scale: 1/8" - 1'0"

drawn by: JCH checked by: RCC

date: SEPTEMBER 18, 2017

rev:	date:	description:
	8/17/2017	BID SET
2	9/18/2017	ADDENDUM A
	4/25/2019	RECORD DRAWINGS

THIS DRAWING AND THE DESIGNS, DEPICTIONS, IDEAS AND OTHER INFORMATION CONTAINED HEREIN CONSTITUTE UNPUBLISHED WORK OF tBP/ARCHITECTURE AND SHALL REMAIN PROPERTY OF tBP/ARCHITECTURE IN PERPETUITY. NO PART THEREOF SHALL BE REPRODUCED, DISCLOSED, DISTRIBUTED, SOLD, PUBLISHED OR OTHERWISE USED IN ANY WAY WITHOUT THE ADVANCED EXPRESS WRITTEN CONSENT OF tBP/ARCHITECTURE.

drawing title:
HVAC SECOND FLOOR DEMO PLAN

drawing no.:
MD2.2

drawing of

Record Dwgs

\\cosyncs.lan\network\Project_Data\2016\160781.00\1200 Drawings\1209 AutoCAD Project Files\MD2-2.DWG - <nwalsp> - August 6, 2018

QC	
INI	%

DEMOLITION GENERAL NOTES:

1. LOCATIONS OF EXISTING EQUIPMENT, DUCTWORK AND PIPING SHOWN ARE APPROXIMATE ONLY AND DO NOT NECESSARILY REPRESENT ALL (E)HVAC COMPONENTS THAT WILL REQUIRE REMOVAL OR ABANDONMENT FOR COMPLETION OF (N)WORK. CONTRACTOR SHALL FIELD VERIFY EXACT LOCATIONS AND NUMBER OF (E)HVAC COMPONENTS IN FIELD PRIOR TO BEGINNING WORK AND PROVIDE ALL NECESSARY DEMOLITION REQUIRED TO COMPLETE (N)HVAC SYSTEM INSTALLATION.

DEMOLITION SHEET NOTES:

1. REMOVE EXISTING MAKE UP AIR UNIT, ALL DUCTWORK, ROOF CURB, SUPPORTS AND RELATED ACCESSORIES. REMOVE ALL RELATED CONTROLS INCLUDING TEMPERATURE CONTROL VALVES.
2. DISCONNECT GAS CONNECTION AND REMOVE HEATING COILS, ALL DUCTWORK, ROOF CURB, SUPPORTS AND RELATED ACCESSORIES.
3. REMOVE EXISTING KITCHEN HOOD EXHAUST FAN, ROOF CURB, DUCTS AND SUPPORTS.
4. REMOVE EXISTING CONDENSING UNIT, ROOF CURB AND SUPPORTS. COLLECT REFRIGERANT IN SUITABLE CONTAINER AND REMOVE ALL REFRIGERANT PIPING AND SUPPORTS FROM CONDENSING UNITS TO COILS AT INDOOR UNITS.
5. REMOVE EXISTING ROOFTOP AIR CONDITIONING UNIT, ROOF CURB, SUPPORTS AND RELATED ACCESSORIES. ABANDON DUCTWORK BELOW AND PATCH AND REPAIR ROOF PENETRATIONS.
6. REMOVE EXISTING DUCTWORK AND SUPPORTS. PATCH AND REPAIR ROOF PENETRATIONS.
7. DISCONNECT GAS AND REMOVE EXISTING ROOFTOP AC UNIT, ALL DUCTWORK, ROOF CURB, SUPPORTS AND RELATED ACCESSORIES. REMOVE ALL RELATED CONTROLS SYSTEMS.
8. REMOVE EXISTING ROOFTOP EXHAUST FAN, ROOF CURB AND SUPPORTS.

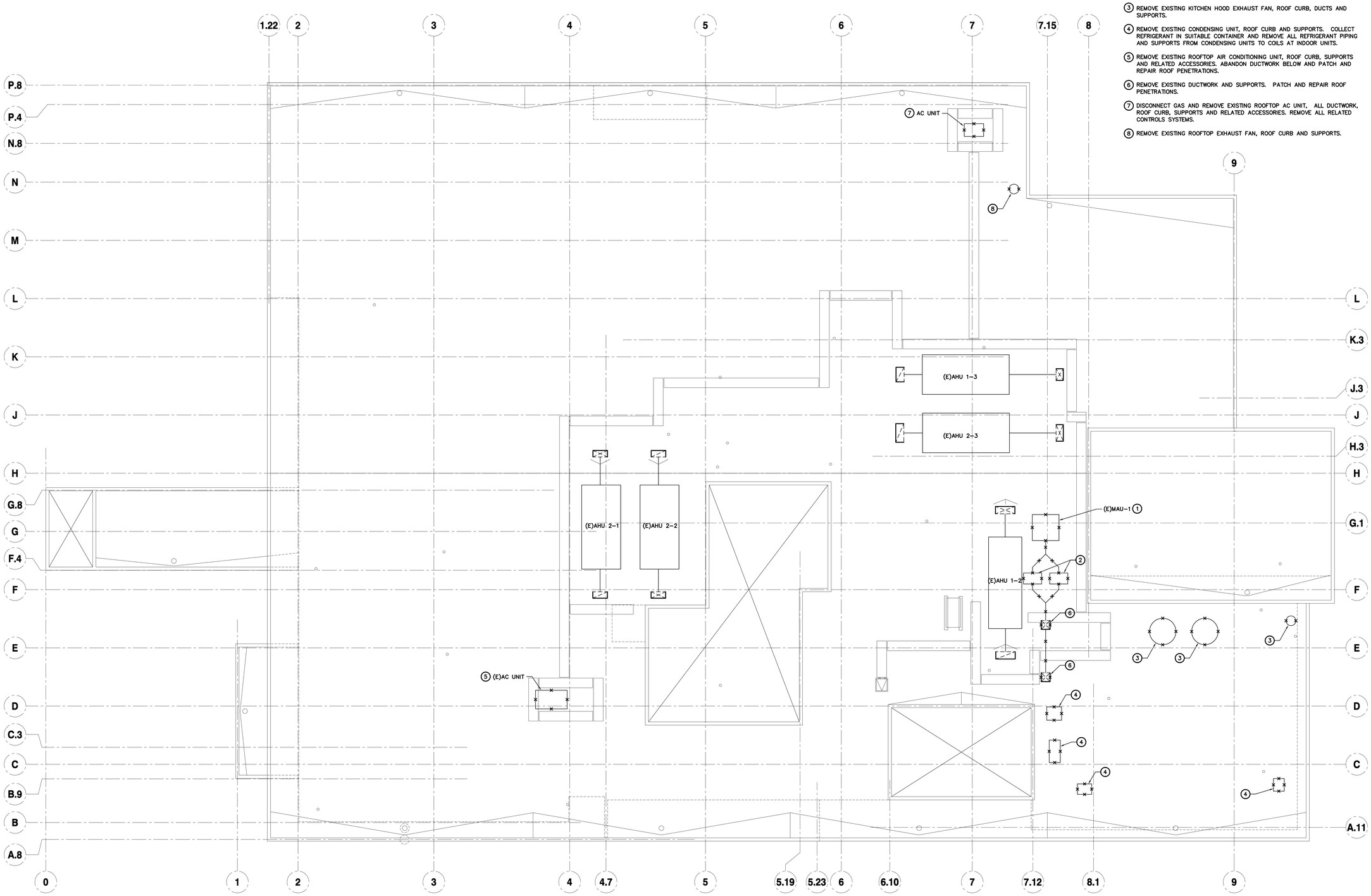

HVAC - ROOF DEMOLITION PLAN

SCALE : 1/8" = 1'-0"

1
MD2.3

N

tBP
architecture
planning
interiors

tBP/Architecture
1777 Oakland Boulevard, Suite 320
Walnut Creek, CA 94596
ph: 925.246.6418

architect

DATE SIGNED: 03/21/18

CAPITAL
ENGINEERING CONSULTANTS, INC.
RANCHO CORDOVA, CALIFORNIA

TD – RCC/MJR/JCH 160761.00
PM – DESIGN TEAM PROJECT NO.

consultant

IDENTIFICATION STAMP
DIV. OF THE STATE ARCHITECT
OFFICE OF REGULATION SERVICES
APPL # 01-
FILE NO. 7-C1
AC ___ FLS ___ SS ___
DATE ___

DIVISION OF THE STATE ARCHITECT
1515 CLAY STREET
OAKLAND, CA94612
ph:(510) 622-3101

agency

C-4008 APPLIED ARTS & ADMIN RENOVATION

2600 MISSION BELL DRIVE, SAN PABLO, CA 94806

CONTRA COSTA COMMUNITY COLLEGE DISTRICT
500 COURT STREET MARTINEZ, CA 94553

owner

tBP project number: 20865.00

scale: 1/8" - 1'0"

drawn by: JCH checked by: RCC

date: SEPTEMBER 18, 2017

rev:	date:	description:
	8/17/2017	BID SET
	4/25/2019	RECORD DRAWINGS

THIS DRAWING AND THE DESIGNS, DEPICTIONS, IDEAS AND OTHER INFORMATION CONTAINED HEREIN CONSTITUTE UNPUBLISHED WORK OF tBP/ARCHITECTURE AND SHALL REMAIN PROPERTY OF tBP/ARCHITECTURE IN PERPETUITY. NO PART THEREOF SHALL BE REPRODUCED, DISCLOSED, DISTRIBUTED, SOLD, PUBLISHED OR OTHERWISE USED IN ANY WAY WITHOUT THE ADVANCED EXPRESS WRITTEN CONSENT OF tBP/ARCHITECTURE.

drawing title:
HVAC ROOF DEMO PLAN

drawing no.:
MD2.3

drawing of

Record Dwgs

\\appsan.lan\artwork\Project_Data\2016\160761.00\200 Drawings\200 AutoCAD Project Files\MD2-1.DWG - crosleyjo - August 6, 2018

QC	
INI	%

DEMOLITION GENERAL NOTES:

1. LOCATIONS OF EXISTING EQUIPMENT, DUCTWORK AND PIPING SHOWN ARE APPROXIMATE ONLY AND DO NOT NECESSARILY REPRESENT ALL (E) HVAC COMPONENTS THAT WILL REQUIRE REMOVAL OR ABANDONMENT FOR COMPLETION OF (N) WORK. CONTRACTOR SHALL FIELD VERIFY EXACT LOCATIONS AND NUMBER OF (E) HVAC COMPONENTS IN FIELD PRIOR TO BEGINNING WORK AND PROVIDE ALL NECESSARY DEMOLITION REQUIRED TO COMPLETE (N) HVAC SYSTEM INSTALLATION.

DEMOLITION SHEET NOTES:

1. REMOVE EXISTING HEATING COIL, SUPPORTS AND ALL RELATED CONTROL SYSTEMS. CUT & CAP EXISTING HOT WATER PIPING IN PREPARATION OF (N) CONNECTION.

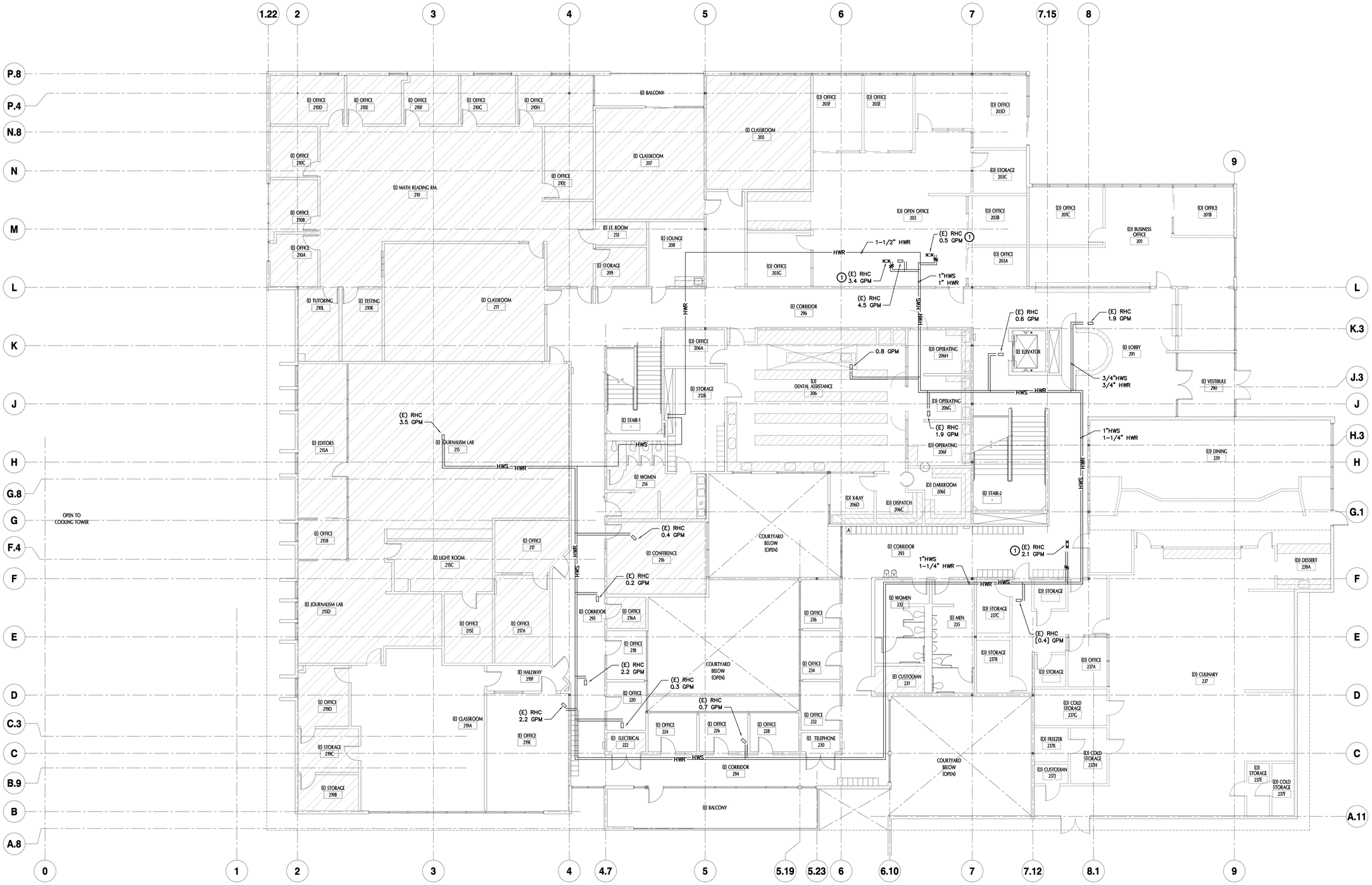

HVAC PIPING - SECOND FLOOR DEMOLITION PLAN

1 / MD3.2

SCALE : 1/8" = 1'-0"

tBP
architecture
planning
interiors

tBP/Architecture
1777 Oakland Boulevard, Suite 320
Walnut Creek, CA 94596
ph: 925.246.6418

architect

DATE SIGNED: 03/21/18

CAPITAL ENGINEERING CONSULTANTS, INC.
RANCHO CORDOVA, CALIFORNIA

TD – RCC/MJR/JCH PM – DESIGN TEAM
160781.00 PROJECT NO.

consultant

IDENTIFICATION STAMP
DIV. OF THE STATE ARCHITECT
OFFICE OF REGULATION SERVICES
APPL # 01-
FILE NO. 7-C1
AC ____ FCS ____ SS ____
DATE ____

DIVISION OF THE STATE ARCHITECT
1515 CLAY STREET
OAKLAND, CA94612
ph:(510) 622-3101

agency

C-4008 APPLIED ARTS & ADMIN RENOVATION

2600 MISSION BELL DRIVE, SAN PABLO, CA 94806

CONTRA COSTA COMMUNITY COLLEGE DISTRICT
500 COURT STREET MARTINEZ, CA 94553

owner

tBP project number: 20865.00

scale: 1/8" - 1'0"

drawn by: JCH checked by: RCC

date: SEPTEMBER 18, 2017

rev:	date:	description:
	8/17/2017	BID SET
	4/25/2019	RECORD DRAWINGS

THIS DRAWING AND THE DESIGNS, DEPICTIONS, IDEAS AND OTHER INFORMATION CONTAINED HEREIN CONSTITUTE UNPUBLISHED WORK OF tBP/ARCHITECTURE AND SHALL REMAIN PROPERTY OF tBP/ARCHITECTURE IN PERPETUITY. NO PART THEREOF SHALL BE REPRODUCED, DISCLOSED, DISTRIBUTED, SOLD, PUBLISHED OR OTHERWISE USED IN ANY WAY WITHOUT THE ADVANCED EXPRESS WRITTEN CONSENT OF tBP/ARCHITECTURE.

drawing title:

HVAC PIPING SECOND FLOOR DEMO PLAN

drawing no.:

MD3.2

drawing of

Record Dwgs

QC	
INI	%

GENERAL NOTES:

1. WHERE NOTED ON THIS FLOOR PLAN WITH "UCD", PROVIDE 3/4" DOOR UNDERCUT FOR TRANSFER / MAKE-UP AIR. REFER TO ARCHITECTURAL DOOR SCHEDULE FOR DETAILS.
2. FOR CLARITY, ALL MANUAL VOLUME AIR DAMPERS MAY NOT BE SHOWN ON MECHANICAL FLOOR PLANS. PROVIDE A MANUAL AIR DAMPER AT EVERY SA/RA/EA BRANCH DUCT SERVING A SINGLE DIFFUSER/GRILLE, TYP.
3. REFER TO ARCHITECTURAL REFLECTED CEILING PLANS FOR EXACT LOCATION OF CEILING DIFFUSERS/GRILLES/FANS/ACCESS PANELS, TYP.
4. FOR TYPICAL LAY-IN DIFFUSER/GRILLE MOUNTING, REFER TO DETAIL 5/M5.1, TYP.
5. FOR TYPICAL CONCEALED DUCT SUPPORT, REFER TO DETAIL 7/M5.1, TYP.
6. FOR TYPICAL RADIUSED FACE DIFFUSER ON EXPOSED SPIRAL DUCTWORK, SEE DETAIL 9/M5.1, TYP.

SHEET NOTES:

1. 1/2"RS & 1/4"RL PIPING UP TO SECOND FLOOR.
2. EXISTING INDUCTION BOX TERMINAL UNIT. REPLACE EXISTING PNEUMATIC CONTROLS WITH DDC TYPE, SEE DETAIL 2/M6.1.
3. COMBINATION FIRE/SMOKE DAMPER AT CEILING MOUNTING, REFER TO DETAIL 1/M5.2, TYP.
4. PROVIDE FIRE/SMOKE DAMPER IN (E) DUCT THRU NEW RATED WALL, REFER TO DETAIL 8/M5.1, TYP.

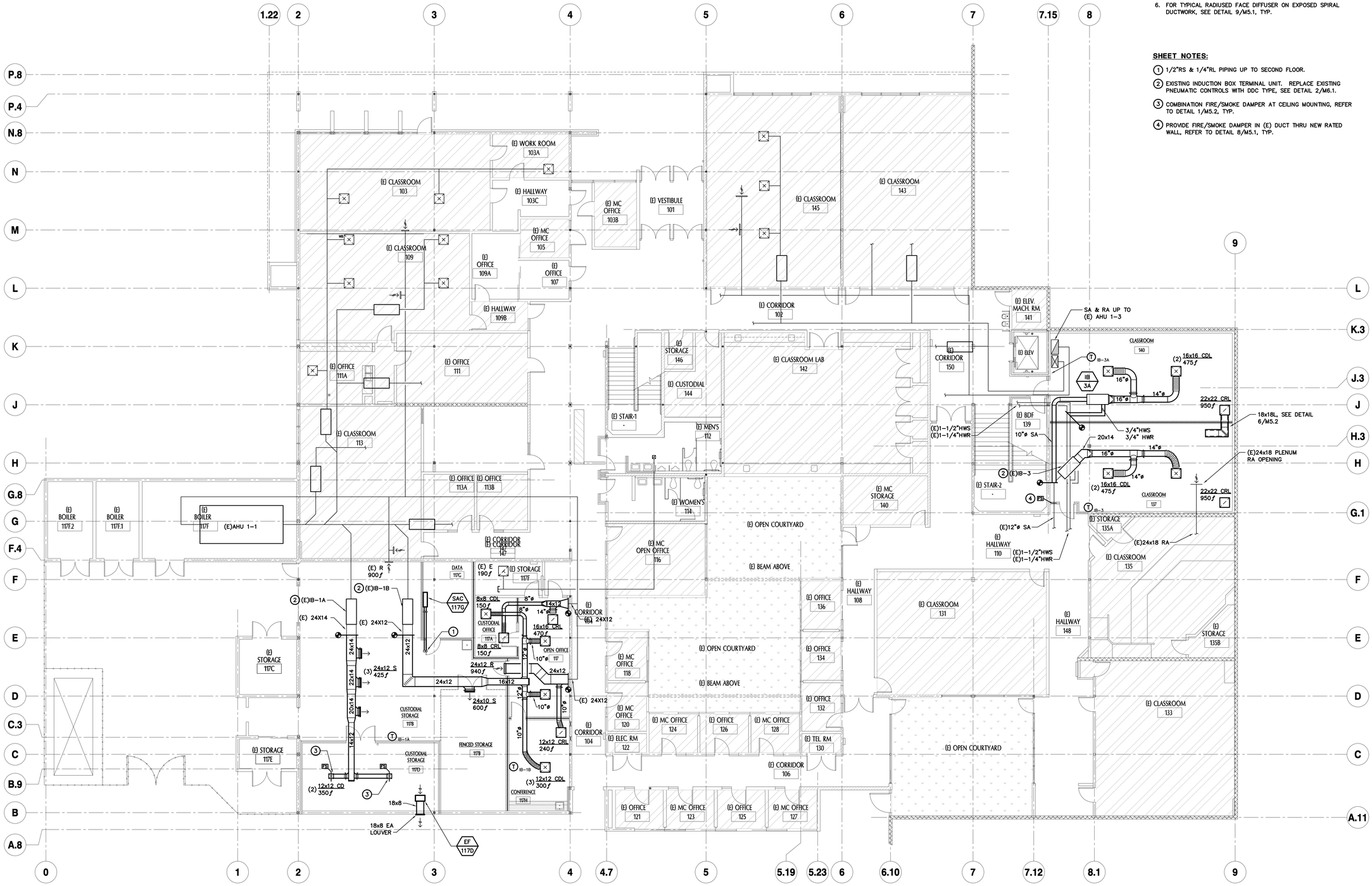

HVAC - FIRST FLOOR NEW WORK PLAN

SCALE : 1/8" = 1'-0"

1 / M2.1

N

tBP architecture planning interiors

tBP/Architecture
1777 Oakland Boulevard, Suite 320
Walnut Creek, CA 94596
ph: 925.248.8418

architect

DATE SIGNED: 03/21/18

CAPITAL ENGINEERING CONSULTANTS, INC.
RANCHO CORDOVA, CALIFORNIA
TD – RCC/MJR/JCH PM – DESIGN TEAM
160781.00 PROJECT NO.

consultant

IDENTIFICATION STAMP
DIV. OF THE STATE ARCHITECT
OFFICE OF REGULATION SERVICES
APPL # 01-
FILE NO. 72-C1
AC ___ FLS ___ SS ___
DATE

DIVISION OF THE STATE ARCHITECT
1515 CLAY STREET
OAKLAND, CA94612
ph:(510) 622-3101

agency

C-4008 APPLIED ARTS & ADMIN RENOVATION

2600 MISSION BELL DRIVE, SAN PABLO, CA 94806

CONTRA COSTA COMMUNITY COLLEGE DISTRICT
500 COURT STREET MARTINEZ, CA 94553

owner

tBP project number: 20865.00
scale: 1/8" - 1'0"
drawn by: JCH checked by: RCC
date: SEPTEMBER 18, 2017

rev:	date:	description:
	09/17/2017	BID SET
1	9/18/2017	ADDENDUM A
10	3/16/2018	ASI 10
	4/25/2019	RECORD DRAWINGS

THIS DRAWING AND THE DESIGNS, DEPICTIONS, IDEAS AND OTHER INFORMATION CONTAINED HEREIN CONSTITUTE UNPUBLISHED WORK OF tBP/ARCHITECTURE AND SHALL REMAIN PROPERTY OF tBP/ARCHITECTURE IN PERPETUITY. NO PART THEREOF SHALL BE REPRODUCED, DISCLOSED, DISTRIBUTED, SOLD, PUBLISHED OR OTHERWISE USED IN ANY WAY WITHOUT THE ADVANCED EXPRESS WRITTEN CONSENT OF tBP/ARCHITECTURE.

drawing title:
HVAC FIRST FLOOR NEW WORK PLAN

drawing no.:
M2.1

drawing of

Record Dwgs

\\capsacc\arch\network\Project_Docs\2016\160781.00\1000 Drawings\1205 AutoCAD Project Files\M-1.DWG - <<today>> - August 6, 2018

QC

INI	%

GENERAL NOTES:

1. WHERE NOTED ON THIS FLOOR PLAN WITH "UCD", PROVIDE 3/4" DOOR UNDERCUT FOR TRANSFER / MAKE-UP AIR. REFER TO ARCHITECTURAL DOOR SCHEDULE FOR DETAILS.
2. FOR CLARITY, ALL MANUAL VOLUME AIR DAMPERS MAY NOT BE SHOWN ON MECHANICAL FLOOR PLANS. PROVIDE A MANUAL AIR DAMPER AT EVERY SA/RA/EA BRANCH DUCT SERVING A SINGLE DIFFUSER/GRILLE, TYP.
3. REFER TO ARCHITECTURAL REFLECTED CEILING PLANS FOR EXACT LOCATION OF CEILING DIFFUSERS/GRILLES/FANS/ACCESS PANELS, TYP.
4. FOR TYPICAL LAY-IN DIFFUSER/GRILLE MOUNTING, REFER TO DETAIL 5/M5.1.
5. FOR TYPICAL CONCEALED DUCT SUPPORT, REFER TO DETAIL 9/M5.1.
6. FOR TYPICAL COMBINATION FIRE/SMOKE DAMPER THRU WALL MOUNTING, REFER TO DETAIL 8/M5.1, TYP.
7. FOR TYPICAL COMBINATION FIRE/SMOKE DAMPER THRU FLOOR/ROOF MOUNTING, REFER TO DETAIL 2/M5.2, TYP.

SHEET NOTES:

1. 1/2"RS & 1/4"RL PIPING RISER.
2. EXISTING VAV TERMINAL UNIT. REPLACE EXISTING PNEUMATIC CONTROLS WITH DDC TYPE, SEE DETAIL 2/M6.1.
3. EXISTING DIFFUSER, REBALANCE TO CFM INDICATED.
4. 4"ø DRYER VENT THRU WALL W/ INTEGRAL BACKDRAFT DAMPER & WALL HOOD. INSTALL VENT PER 2016 CMC 504.4 FOR DOMESTIC CLOTHES DRYERS.
5. ALL NEW 2ND FLOOR DIFFUSERS/GRILLES SHALL HAVE CEILING FIRE DAMPERS INSTALLED, "RUSKIN" CFD5/CFDR5, OR EQUAL.

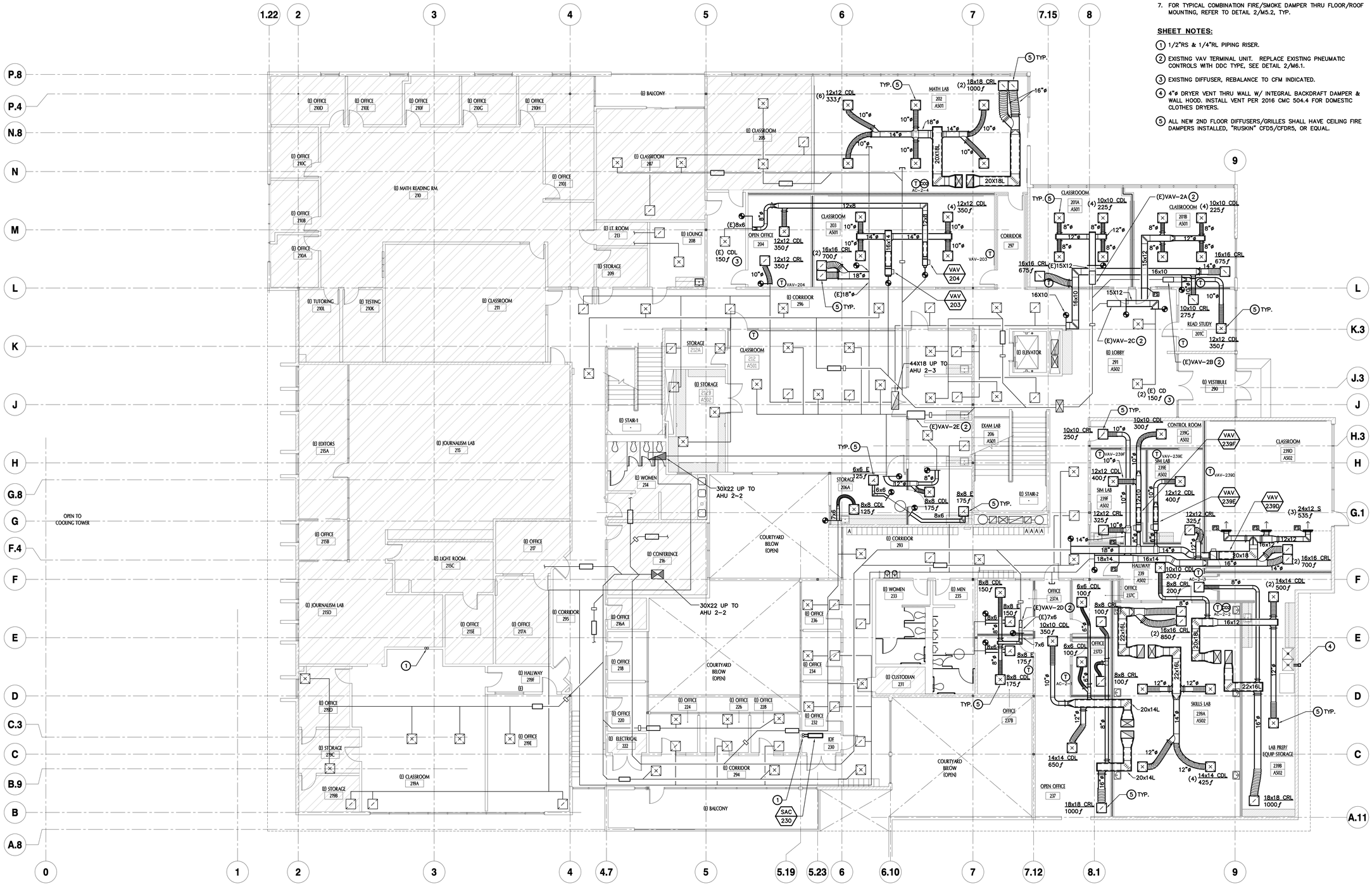

HVAC - SECOND FLOOR NEW WORK PLAN

1 / M2.2

SCALE : 1/8" = 1'-0"

N

tBP architecture planning interiors

tBP/Architecture
1777 Oakland Boulevard, Suite 320
Walnut Creek, CA 94596
ph: 925.248.8418

architect

DATE SIGNED: 03/21/18

CAPITAL ENGINEERING CONSULTANTS, INC.
RANCHO CORDOVA, CALIFORNIA
TD - RCC/MJR/JCH 160781.00
PM - DESIGN TEAM PROJECT NO.

consultant

IDENTIFICATION STAMP
DIV. OF THE STATE ARCHITECT
OFFICE OF REGULATION SERVICES
APPL # 01-
FILE NO. 7-C1
AC ___ RS ___ SS ___
DATE

DIVISION OF THE STATE ARCHITECT
1515 CLAY STREET
OAKLAND, CA94612
ph:(510) 622-3101

agency

C-4008 APPLIED ARTS & ADMIN RENOVATIONS

2600 MISSION BELL DRIVE, SAN PABLO, CA 94806

CONTRA COSTA COMMUNITY COLLEGE DISTRICT
500 COURT STREET MARTINEZ, CA 94553

owner

tBP project number: 20865.00

scale: 1/8" - 1'0"

drawn by: JCH checked by: RCC

date: SEPTEMBER 18, 2017

rev:	date:	description:
	8/17/2017	BID SET
A	9/18/2017	ADDENDUM A
A1B	3/21/2018	ASI 16
	4/25/2019	RECORD DRAWINGS

THIS DRAWING AND THE DESIGNS, DEPICTIONS, IDEAS AND OTHER INFORMATION CONTAINED HEREIN CONSTITUTE UNPUBLISHED WORK OF tBP/ARCHITECTURE AND SHALL REMAIN PROPERTY OF tBP/ARCHITECTURE IN PERPETUITY. NO PART THEREOF SHALL BE REPRODUCED, DISCLOSED, DISTRIBUTED, SOLD, PUBLISHED OR OTHERWISE USED IN ANY WAY WITHOUT THE ADVANCED EXPRESS WRITTEN CONSENT OF tBP/ARCHITECTURE.

drawing title:
HVAC SECOND FLOOR NEW WORK PLAN

drawing no.:
M2.2

drawing of

Record Dwgs

\\copeco.lan\network\Project_Data\20165\00\1000 Drawings\1200 AutoCAD Project Files\M-2.DWG - crosleyjo - August 6, 2018

QC	
INI	%

GENERAL NOTES:

1. COORDINATE OUTSIDE AIR INTAKE LOCATIONS WITH PLUMBING VENT(S) THRU ROOF, EXHAUST AIR DISCHARGE(S), ETC., TO MAINTAIN A MINIMUM WORKING CLEARANCE OF 10'-0", TYP.
2. ROOFTOP AC UNITS SHALL BE INSTALLED WITH A MINIMUM DISTANCE OF 10'-0" FROM AC UNIT CABINET TO EDGE OF ROOF/PARAPET LESS THAN 42" TALL, TYP.

SHEET NOTES:

1. 1/2"RS & 1/4"RL PIPING DOWN THRU ROOF.

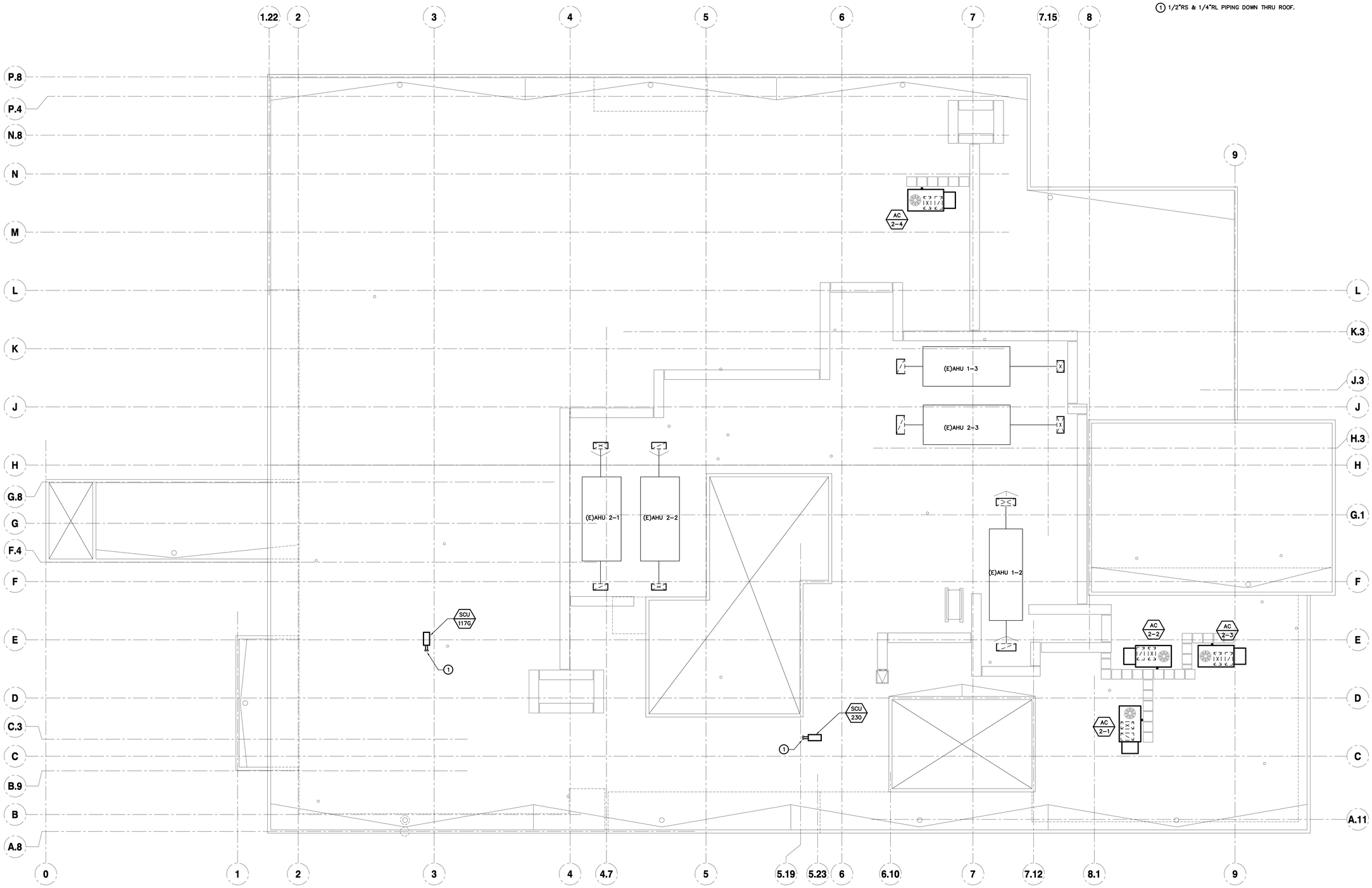

HVAC - NEW WORK ROOF PLAN

SCALE : 1/8" = 1'-0"

1 / M2.3

N

tBP
architecture
planning
interiors

tBP/Architecture
1777 Oakland Boulevard, Suite 320
Walnut Creek, CA 94596
ph: 925.246.6418

architect

DATE SIGNED: 03/21/18

CAPITAL
ENGINEERING CONSULTANTS, INC.
RANCHO CORDOVA, CALIFORNIA

TD – RCC/MJR/JCH 160761.00
PM – DESIGN TEAM PROJECT NO.

consultant

IDENTIFICATION STAMP
DIV. OF THE STATE ARCHITECT
OFFICE OF REGULATION SERVICES
APPL # 01-
FILE NO. 7-C1
AC ___ RS ___ SS ___
DATE ___

DIVISION OF THE STATE ARCHITECT
1515 CLAY STREET
OAKLAND, CA94612
ph:(510) 622-3101

agency

C-4008 APPLIED ARTS & ADMIN RENOVATION

2600 MISSION BELL DRIVE, SAN PABLO, CA 94806

CONTRA COSTA COMMUNITY COLLEGE DISTRICT
500 COURT STREET MARTINEZ, CA 94553

owner

tBP project number: 20865.00

scale: 1/8" - 1'0"

drawn by: JCH checked by: RCC

date: SEPTEMBER 18, 2017

rev:	date:	description:
	8/17/2017	BID SET
	4/25/2019	RECORD DRAWINGS

THIS DRAWING AND THE DESIGNS, DEPICTIONS, IDEAS AND OTHER INFORMATION CONTAINED HEREIN CONSTITUTE UNPUBLISHED WORK OF tBP/ARCHITECTURE AND SHALL REMAIN PROPERTY OF tBP/ARCHITECTURE IN PERPETUITY. NO PART THEREOF SHALL BE REPRODUCED, DISCLOSED, DISTRIBUTED, SOLD, PUBLISHED OR OTHERWISE USED IN ANY WAY WITHOUT THE ADVANCED EXPRESS WRITTEN CONSENT OF tBP/ARCHITECTURE.

drawing title:
HVAC NEW WORK ROOF PLAN

drawing no.:
M2.3

drawing of

Record Dwgs

\\appsan.lan\network\Project_Data\2016\160761.00\200 Drawings\200 AutoCAD Project Files\M2-3.DWG – crosbyjo – August 6, 2018

QC	
INI	%

GENERAL NOTES:

1. FOR TYPICAL 2-WAY REHEAT COIL PIPING, REFER TO DETAIL 14/M5.1, TYP.
2. FOR TYPICAL FIRESTOP PENETRATION DETAILS THROUGH RATED WALL, REFER TO SHEET A941.

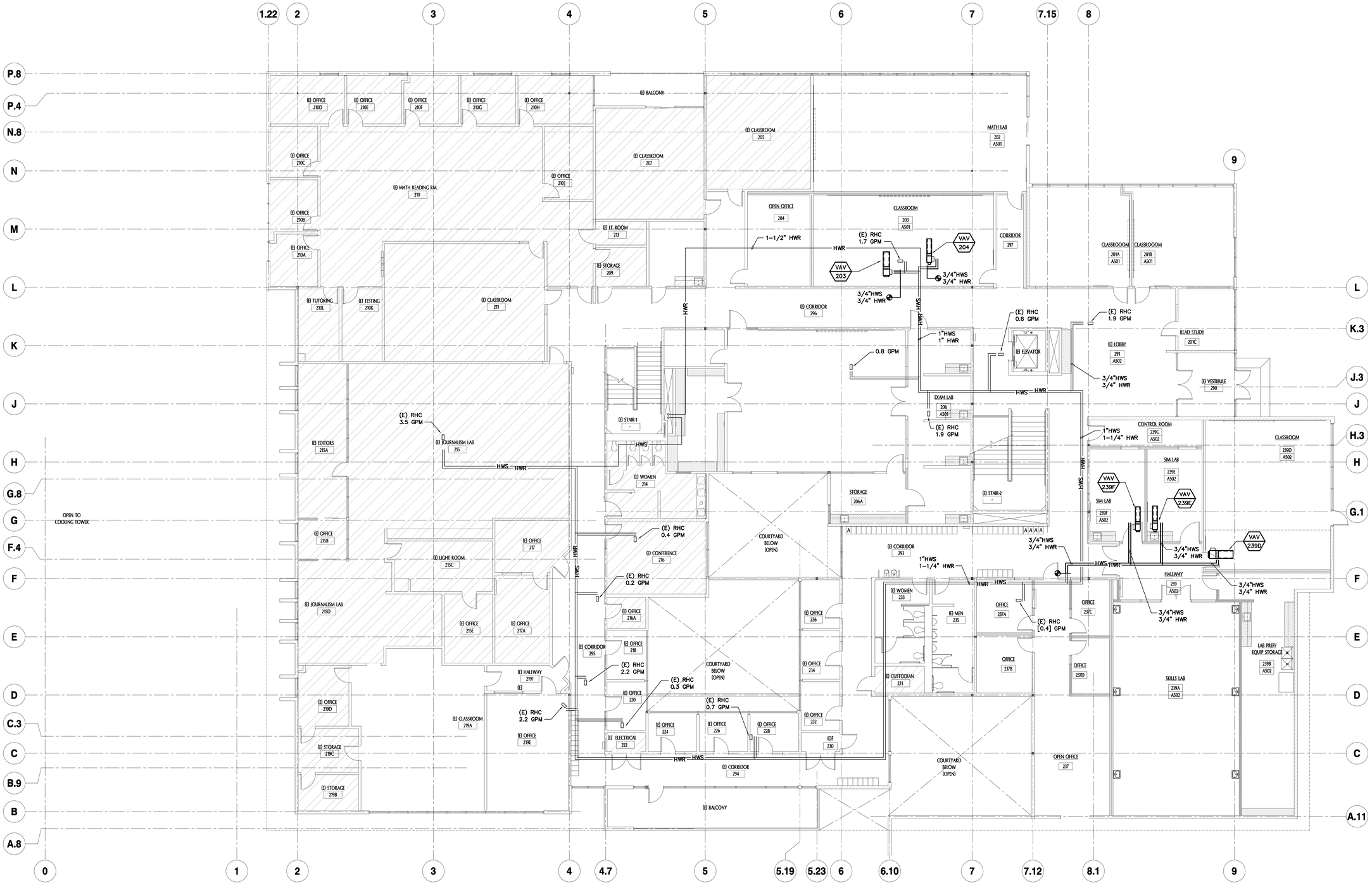

HVAC PIPING - SECOND FLOOR NEW WORK PLAN

1 / M3.2

SCALE : 1/8" = 1'-0"

N

tBP architecture planning interiors

tBP/Architecture
1777 Oakland Boulevard, Suite 320
Walnut Creek, CA 94596
ph: 925.246.6418

architect

DATE SIGNED: 03/21/18

CAPITAL ENGINEERING CONSULTANTS, INC.
RANCHO CORDOVA, CALIFORNIA

TD – RCC/MJR/JCH PM – DESIGN TEAM
160781.00 PROJECT NO.

consultant

IDENTIFICATION STAMP
DIV. OF THE STATE ARCHITECT
OFFICE OF REGULATION SERVICES
APPL # 01-
FILE NO. 7-C1
AC ___ KS ___ SS ___
DATE ___

DIVISION OF THE STATE ARCHITECT
1515 CLAY STREET
OAKLAND, CA94612
ph:(510) 622-3101

agency

C-4008 APPLIED ARTS & ADMIN RENOVATION
2600 MISSION BELL DRIVE, SAN PABLO, CA 94806

CONTRA COSTA COMMUNITY COLLEGE DISTRICT
500 COURT STREET MARTINEZ, CA 94553

owner

tBP project number: 20865.00

scale: 1/8" - 1'0"

drawn by: JCH checked by: RCC

date: SEPTEMBER 18, 2017

rev:	date:	description:
	6/17/2017	BID SET
	4/25/2019	RECORD DRAWINGS

THIS DRAWING AND THE DESIGNS, DEPICTIONS, IDEAS AND OTHER INFORMATION CONTAINED HEREIN CONSTITUTE UNPUBLISHED WORK OF tBP/ARCHITECTURE AND SHALL REMAIN PROPERTY OF tBP/ARCHITECTURE IN PERPETUITY. NO PART THEREOF SHALL BE REPRODUCED, DISCLOSED, DISTRIBUTED, SOLD, PUBLISHED OR OTHERWISE USED IN ANY WAY WITHOUT THE ADVANCED EXPRESS WRITTEN CONSENT OF tBP/ARCHITECTURE.

drawing title:

HVAC PIPING SECOND FLOOR NEW WORK PLAN

drawing no.:

M3.2

drawing of

Record Dwgs

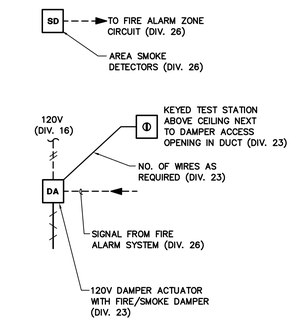

WIRING DIAGRAM

CSFM LISTING NO. 3235-0245:0124

FIRE DAMPERS SHALL BE LISTED AND CALIFORNIA STATE FIRE MARSHAL APPROVED AND INSTALLED IN STRICT ACCORDANCE WITH THE MANUFACTURER'S INSTRUCTIONS. MANUFACTURER'S INSTRUCTIONS SHALL BE MADE AVAILABLE TO THE INSPECTING AUTHORITY. DETAILS SHOWN ARE FOR REFERENCE ONLY.

NOTES :

1. INSTALLATION SHALL BE PER THE DAMPER MANUFACTURER'S U.L. LISTING FOR DAMPER IN THE PLANE OF THE WALL AND ACTUATOR OUTSIDE OF THE DUCT. MANUFACTURER SHALL PROVIDE ALL COMPONENTS NECESSARY TO INSTALL THE DAMPERS PER THIS REQUIREMENT.
2. WIRE TO CLOSE DAMPER UPON SENSING OF SMOKE BY THE TOTAL COVERAGE SMOKE DETECTION SYSTEM VIA A SIGNAL FROM THE FIRE ALARM SYSTEM. FOR WIRING DIAGRAM, SEE LEFT. DAMPER CLOSURE SHALL SHUT DOWN IT'S ASSOCIATED SUPPLY FAN. PROVIDE ALL WIRING, CONDUITS, RELAYS, ETC. REQUIRED TO RENDER SYSTEM COMPLETE.
3. DAMPER ACTUATOR SHALL BE A POWER OPEN-FAIL CLOSE TYPE.

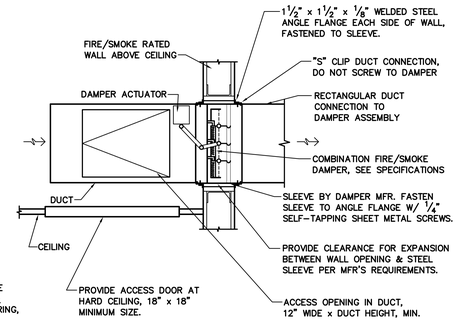

MOUNTING DETAIL

COMBINATION FIRE/SMOKE DAMPER THRU WALL MOUNTING (8 / M5.1)

SCALE : NONE

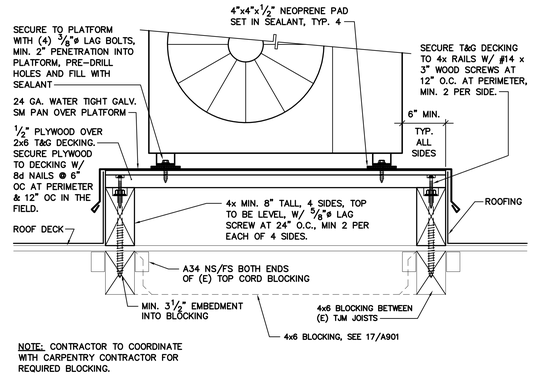

NOTE: CONTRACTOR TO COORDINATE WITH CARPENTRY CONTRACTOR FOR REQUIRED BLOCKING.

SCU MOUNTING (4 / M5.1)

SCALE : NONE

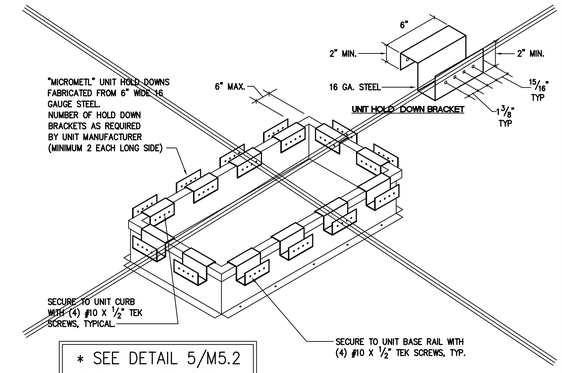

* SEE DETAIL 5/M5.2 FOR UPDATED DETAIL

HOLD DOWN PLACEMENT (1 / M5.1)

SCALE : NONE

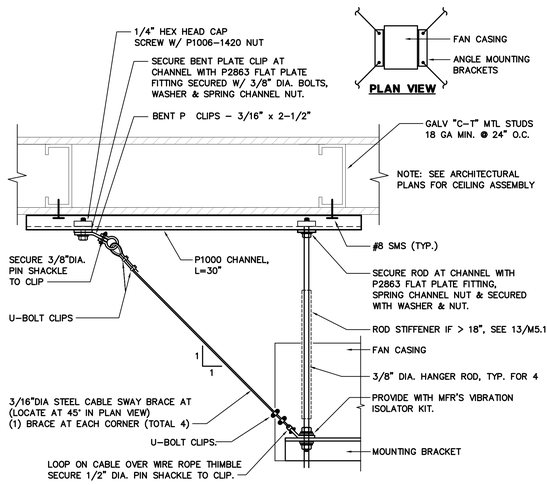

EXHAUST FAN MOUNTING (12 / M5.1)

SCALE : NONE

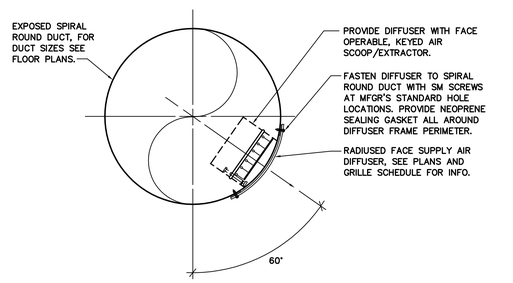

RADIUSED FACE DIFFUSER MOUNTING (9 / M5.1)

SCALE : NONE

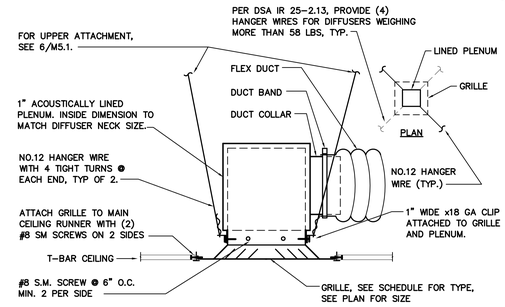

TYP. LAY-IN DIFFUSER/GRILLE MOUNTING (5 / M5.1)

SCALE : NONE

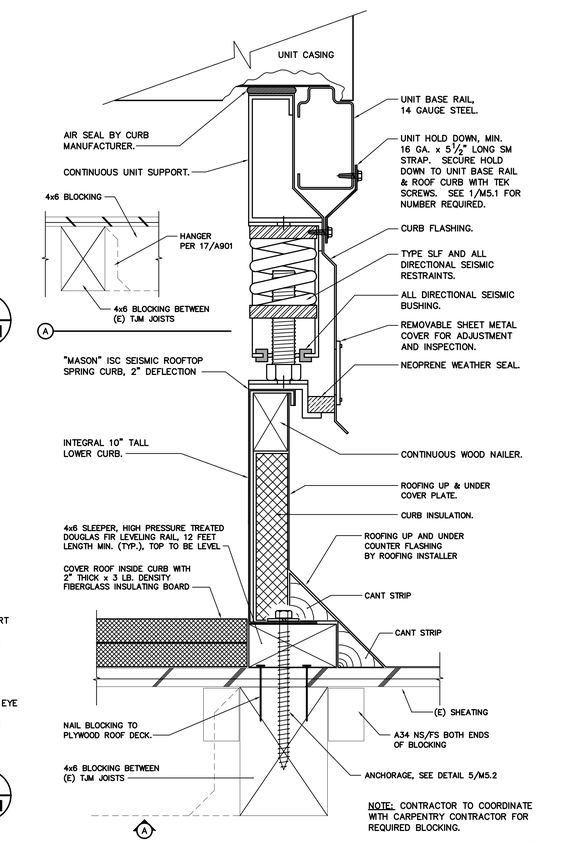

AC UNIT ON SPRING CURB MOUNTING (2 / M5.1)

SCALE : NONE

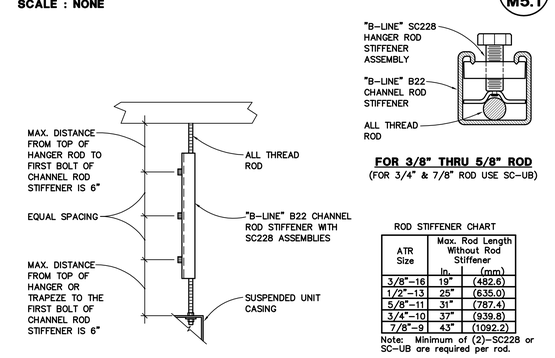

ROD STIFFENER CHART

ATR Size	Max. Rod Length Without Rod Stiffener in.	(mm)
3/8"-16	19"	(482.6)
1/2"-13	25"	(635.0)
5/8"-11	31"	(787.4)
3/4"-10	37"	(939.8)
7/8"-9	43"	(1092.2)

Note: Minimum of (2)-SC228 or SC-UB are required per rod.

DETAIL FROM "B-LINE" SEISMIC RESTRAINTS SYSTEM, OSHPD PRE-APPROVAL No. OPA-300.

ROD STIFFENER DETAIL (13 / M5.1)

SCALE : NONE

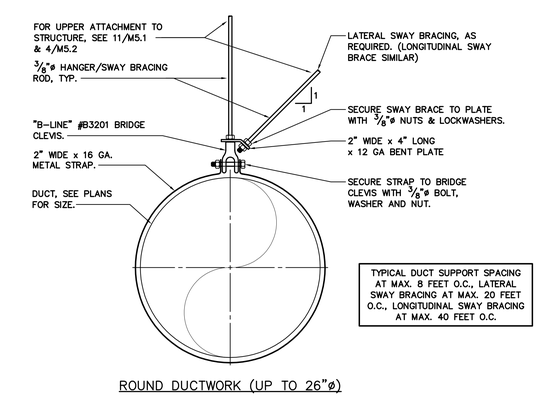

TYPICAL DUCT SUPPORT SPACING AT MAX. 8 FEET O.C., LATERAL SWAY BRACING AT MAX. 20 FEET O.C., LONGITUDINAL SWAY BRACING AT MAX. 40 FEET O.C.

ROUND DUCTWORK (UP TO 26"ø)

TYPICAL EXPOSED ROUND DUCT SUPPORT (10 / M5.1)

SCALE : NONE

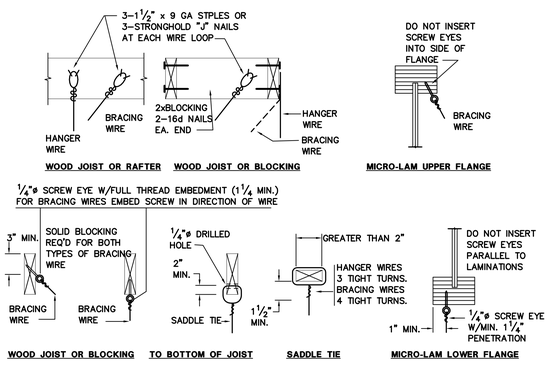

HANGER WIRE UPPER ATTACHMENT (6 / M5.1)

SCALE : NONE

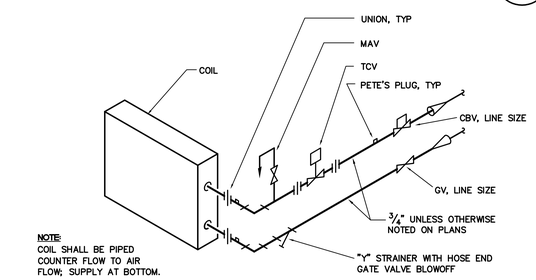

NOTE:
COIL SHALL BE PIPED COUNTER FLOW TO AIR FLOW; SUPPLY AT BOTTOM.

REHEAT COIL PIPING DETAIL (2-WAY) (14 / M5.1)

SCALE : NONE

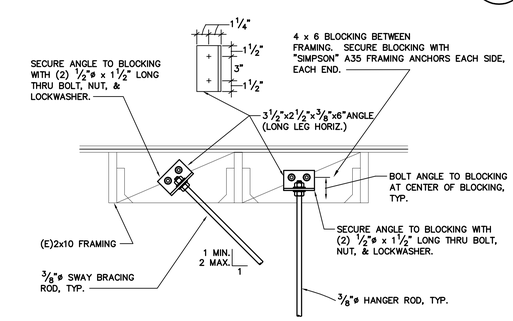

NOTE: CONTRACTOR TO COORDINATE WITH CARPENTRY CONTRACTOR FOR REQUIRED BLOCKING.

HANGER ROD UPPER ATTACHMENT (1ST FLR) (11 / M5.1)

SCALE : NONE

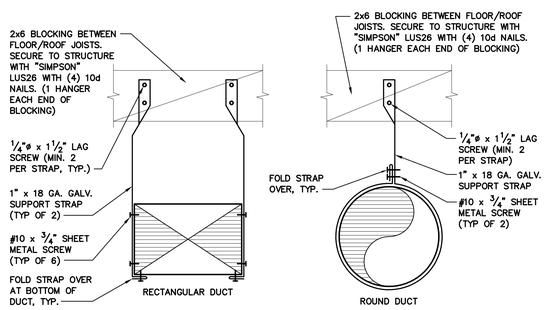

NOTE: SUPPORT STRAP SPACING SHALL BE MAX. 8'-0" O.C. APPLICABLE TO DUCTS THAT ARE 12" OR LESS BELOW THE BLDG STRUCTURE AT THE POINT OF ATTACHMENT.

NOTE: CONTRACTOR TO COORDINATE WITH CARPENTRY CONTRACTOR FOR REQUIRED BLOCKING.

TYPICAL DUCT SUPPORT (7 / M5.1)

SCALE : NONE

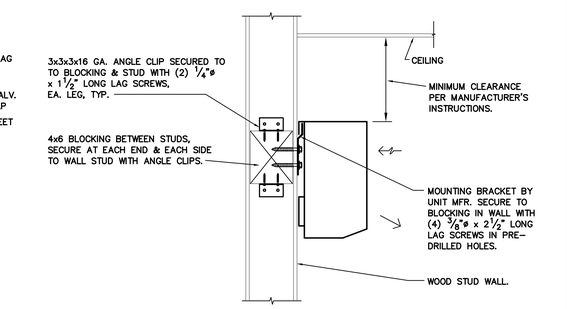

SAC MOUNTING (3 / M5.1)

SCALE : NONE

QC | INI | %

tBP
architecture
planning
interiors

tBP/Architecture
1777 Oakland Boulevard, Suite 320
Walnut Creek, CA 94596
ph: 925.246.6418

architect

DATE SIGNED: 03/21/18

CAPITAL ENGINEERING CONSULTANTS, INC.
RANCHO CORDOVA, CALIFORNIA
TD - RCC/MJR/JCH 160781.00
PM - DESIGN TEAM PROJECT NO.

consultant

IDENTIFICATION STAMP
DIV. OF THE STATE ARCHITECT
OFFICE OF REGULATION SERVICES
APPL # 01-
FILE NO. 7-C1
AC ___ KS ___ SS
DATE

DIVISION OF THE STATE ARCHITECT
1515 CLAY STREET
OAKLAND, CA94612
ph:(510) 622-3101

agency

C-4008 APPLIED ARTS & ADMIN RENOVATION
2600 MISSION BELL DRIVE, SAN PABLO, CA 94806

CONTRA COSTA COMMUNITY COLLEGE DISTRICT
500 COURT STREET MARTINEZ, CA 94553

owner

tBP project number: 20865.00

scale: NONE

drawn by: JCH checked by: RCC

date: SEPTEMBER 18, 2017

rev:	date:	description:
	8/17/2017	BID SET
A	9/18/2017	ADDENDUM A
	4/25/2019	RECORD DRAWINGS

THIS DRAWING AND THE DESIGNS, DEPICTIONS, IDEAS AND OTHER INFORMATION CONTAINED HEREIN CONSTITUTE UNPUBLISHED WORK OF tBP/ARCHITECTURE AND SHALL REMAIN PROPERTY OF tBP/ARCHITECTURE IN PERPETUITY. NO PART THEREOF SHALL BE REPRODUCED, DISCLOSED, DISTRIBUTED, SOLD, PUBLISHED OR OTHERWISE USED IN ANY WAY WITHOUT THE ADVANCED EXPRESS WRITTEN CONSENT OF tBP/ARCHITECTURE.

drawing title:
MECHANICAL DETAILS

drawing no.:
M5.1

drawing of

Record Dwgs

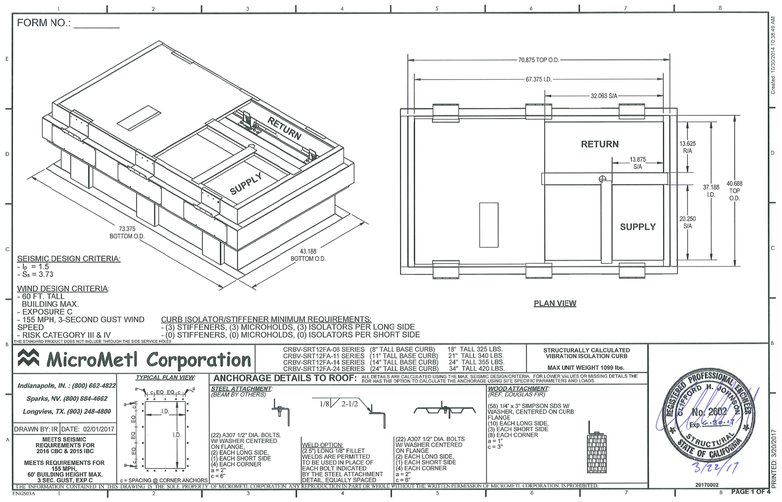

HOLD DOWN PLACEMENT

SCALE : NONE

5 / M5.2

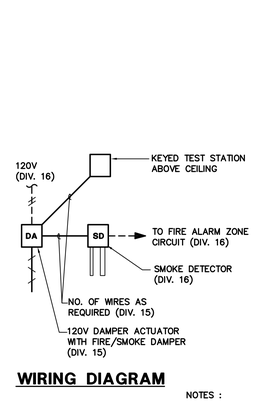

WIRING DIAGRAM

PER DSA IR 25-2.13, PROVIDE (4) HANGER WIRES FOR DIFFUSERS WEIGHING MORE THAN 58 LBS, TYP.

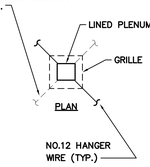

FIRE DAMPERS SHALL BE STATE FIRE MARSHAL APPROVED AND INSTALLED STRICTLY IN ACCORDANCE WITH THE MANUFACTURER'S INSTRUCTIONS. MANUFACTURER'SINSTRUCTIONS SHALL BE MADE AVAILABLE TO THE INSPECTING AUTHORITY. DETAILS SHOWN ARE FOR REFERENCE ONLY.

NOTES :

1. INSTALLATION SHALL BE PER THE DAMPER MANUFACTURER'S U.L. LISTING FOR DAMPER IN THE PLANE OF THE RATED SURFACE AND ACTUATOR OUTSIDE OF THE DUCT. MANUFACTURER SHALL PROVIDE ALL COMPONENTS NECESSARY TO INSTALL THE DAMPERS PER THIS REQUIREMENT.
2. WIRE TO CLOSE DAMPER UPON SENSING OF SMOKE IN AIR STREAM. PROVIDE ALL WIRING, CONDUIT, RELAYS, ETC. REQUIRED TO RENDER SYSTEM COMPLETE.

REFER TO 6/M5.1 FOR WIRE HANGER UPPER ATTACHMENTS.

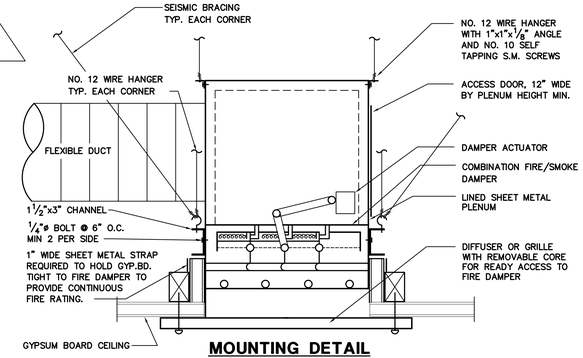

MOUNTING DETAIL

COMBINATION FIRE/SMOKE DAMPER DETAIL AT CEILING

1 / M5.2

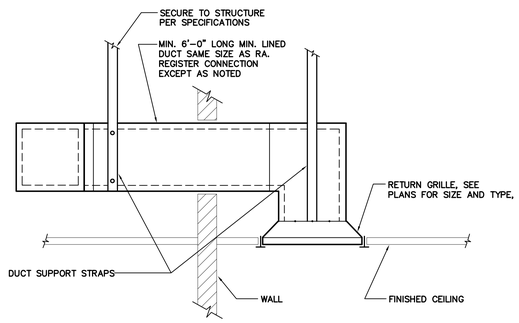

RETURN GRILLE TO CEILING PLENUM

SCALE : NONE

6 / M5.2

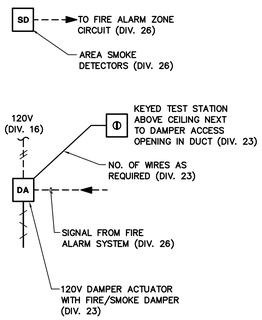

WIRING DIAGRAM

CSFM LISTING NO. 3235-0245:0124

FIRE DAMPERS SHALL BE LISTED AND CALIFORNIA STATE FIRE MARSHAL APPROVED AND INSTALLED IN STRICT ACCORDANCE WITH THE MANUFACTURER'S INSTRUCTIONS. MANUFACTURER'S INSTRUCTIONS SHALL BE MADE AVAILABLE TO THE INSPECTING AUTHORITY. DETAILS SHOWN ARE FOR REFERENCE ONLY.

NOTES :

1. INSTALLATION SHALL BE PER THE DAMPER MANUFACTURER'S U.L. LISTING FOR DAMPER IN THE PLANE OF THE WALL AND ACTUATOR OUTSIDE OF THE DUCT. MANUFACTURER SHALL PROVIDE ALL COMPONENTS NECESSARY TO INSTALL THE DAMPERS PER THIS REQUIREMENT.
2. WIRE TO CLOSE DAMPER UPON SENSING OF SMOKE BY THE TOTAL COVERAGE SMOKE DETECTION SYSTEM VIA A SIGNAL FROM THE FIRE ALARM SYSTEM. FOR WIRING DIAGRAM, SEE LEFT. DAMPER CLOSURE SHALL SHUT DOWN ITS ASSOCIATED SUPPLY FAN. PROVIDE ALL WIRING, CONDUITS, RELAYS, ETC. REQUIRED TO RENDER SYSTEM COMPLETE.
3. DAMPER ACTUATOR SHALL BE A POWER OPEN-FAIL CLOSE TYPE.

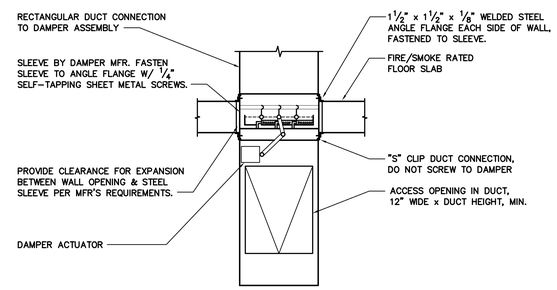

MOUNTING DETAIL

COMBINATION FIRE/SMOKE DAMPER THRU FLOOR MOUNTING

SCALE : NONE

2 / M5.2

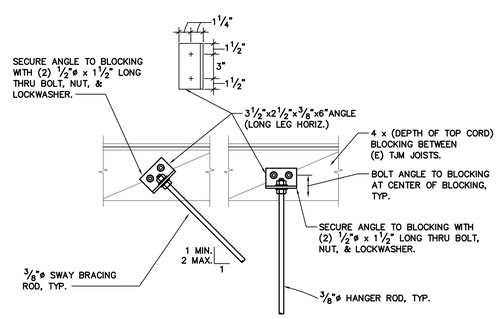

HANGER ROD UPPER ATTACHMENT (2ND FLR)

SCALE : NONE

4 / M5.2

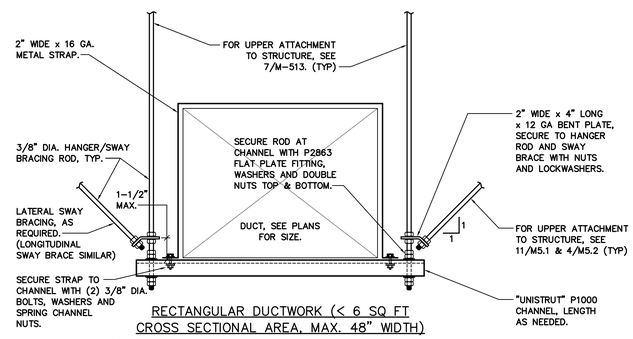

TYPICAL DUCT SUPPORT SPACING AT MAX. 8 FEET O.C., LATERAL SWAY BRACING AT MAX. 20 FEET O.C., LONGITUDINAL SWAY BRACING AT MAX. 40 FEET O.C.

TYPICAL EXPOSED RECTANGULAR DUCT SUPPORT

SCALE : NONE

3 / M5.2

QC

INI	%

tBP architecture planning interiors
tBP/Architecture
1777 Oakland Boulevard, Suite 320
Walnut Creek, CA 94596
ph: 925.246.6418
architect

DATE SIGNED: 03/21/18

CAPITAL ENGINEERING CONSULTANTS, INC.
RANCHO CORDOVA, CALIFORNIA
TD - RCC/MJR/JCH 160781.00
PM - DESIGN TEAM PROJECT NO.
consultant

IDENTIFICATION STAMP
DIV. OF THE STATE ARCHITECT
OFFICE OF REGULATION SERVICES
APPL # 01-
FILE NO. 7-C1
AC ___ RS ___ SS ___
DATE ___

DIVISION OF THE STATE ARCHITECT
1515 CLAY STREET
OAKLAND, CA94612
ph:(510) 622-3101
agency

C-4008 APPLIED ARTS & ADMIN RENOVATION

2600 MISSION BELL DRIVE, SAN PABLO, CA 94806

CONTRA COSTA COMMUNITY COLLEGE DISTRICT
500 COURT STREET MARTINEZ, CA 94553

owner

tBP project number: 20865.00
scale: NONE
drawn by: JCH checked by: RCC
date: SEPTEMBER 18, 2017

rev:	date:	description:
	6/17/2017	BID SET
	4/25/2019	RECORD DRAWINGS

THIS DRAWING AND THE DESIGNS, DEPICTIONS, IDEAS AND OTHER INFORMATION CONTAINED HEREIN CONSTITUTE UNPUBLISHED WORK OF tBP/ARCHITECTURE AND SHALL REMAIN PROPERTY OF tBP/ARCHITECTURE IN PERPETUITY. NO PART THEREOF SHALL BE REPRODUCED, DISCLOSED, DISTRIBUTED, SOLD, PUBLISHED OR OTHERWISE USED IN ANY WAY WITHOUT THE ADVANCED EXPRESS WRITTEN CONSENT OF tBP/ARCHITECTURE.

drawing title: MECHANICAL DETAILS

drawing no.: **M5.2**

drawing of

Record Dwgs

RUN CONDITIONS – SCHEDULED:
THE UNIT WILL RUN ACCORDING TO A USER DEFINABLE TIME SCHEDULE IN THE FOLLOWING MODES:
- OCCUPIED MODE: THE UNIT WILL MAINTAIN
- A 75°F (ADJ.) COOLING SETPOINT
- A 70°F (ADJ.) HEATING SETPOINT.

- UNOCCUPIED MODE (NIGHT SETBACK): THE UNIT WILL MAINTAIN
- A 85°F (ADJ.) COOLING SETPOINT.
- A 55°F (ADJ.) HEATING SETPOINT.

ALARMS WILL BE PROVIDED AS FOLLOWS:
- HIGH ZONE TEMP: IF THE ZONE TEMPERATURE IS GREATER THAN THE COOLING SETPOINT BY A USER DEFINABLE AMOUNT (ADJ.).
- LOW ZONE TEMP: IF THE ZONE TEMPERATURE IS LESS THAN THE HEATING SETPOINT BY A USER DEFINABLE AMOUNT (ADJ.).

DEMAND LIMITING – ZONE SETPOINT OPTIMIZATION:
TO LOWER POWER CONSUMPTION, THE ZONE SETPOINTS WILL AUTOMATICALLY RELAX WHEN THE FACILITY POWER CONSUMPTION EXCEEDS DEFINABLE THRESHOLDS. THE AMOUNT OF RELAXATION WILL BE INDIVIDUALLY CONFIGURABLE FOR EACH ZONE. THE ZONE SETPOINTS WILL AUTOMATICALLY RETURN TO THEIR PREVIOUS SETTINGS WHEN THE FACILITY POWER CONSUMPTION DROPS BELOW THE THRESHOLDS.

ZONE SETPOINT ADJUST:
THE OCCUPANT WILL BE ABLE TO ADJUST THE ZONE TEMPERATURE HEATING AND COOLING SETPOINTS AT THE ZONE SENSOR.

ZONE OPTIMAL START:
THE UNIT WILL USE AN OPTIMAL START ALGORITHM FOR MORNING START–UP. THIS ALGORITHM WILL MINIMIZE THE UNOCCUPIED WARM–UP OR COOL–DOWN PERIOD WHILE STILL ACHIEVING COMFORT CONDITIONS BY THE START OF SCHEDULED OCCUPIED PERIOD.

ZONE UNOCCUPIED OVERRIDE:
A TIMED LOCAL OVERRIDE CONTROL WILL ALLOW AN OCCUPANT TO OVERRIDE THE SCHEDULE AND PLACE THE UNIT INTO AN OCCUPIED MODE FOR AN ADJUSTABLE PERIOD OF TIME. AT THE EXPIRATION OF THIS TIME, CONTROL OF THE UNIT WILL AUTOMATICALLY RETURN TO THE SCHEDULE.

SUPPLY FAN:
THE SUPPLY FAN WILL RUN ANYTIME THE UNIT IS COMMANDED TO RUN, UNLESS SHUTDOWN ON SAFETIES. TO PREVENT SHORT CYCLING, THE SUPPLY FAN WILL HAVE A USER DEFINABLE (ADJ.) MINIMUM RUNTIME.

ALARMS WILL BE PROVIDED AS FOLLOWS:
- SUPPLY FAN FAILURE: COMMANDED ON, BUT THE STATUS IS OFF.
- SUPPLY FAN IN HAND: COMMANDED OFF, BUT THE STATUS IS ON.
- SUPPLY FAN RUNTIME EXCEEDED: STATUS RUNTIME EXCEEDS A USER DEFINABLE LIMIT (ADJ.).

COOLING STAGES:
THE CONTROLLER WILL MEASURE THE ZONE TEMPERATURE AND STAGE THE COOLING TO MAINTAIN ITS COOLING SETPOINT. TO PREVENT SHORT CYCLING, THERE WILL BE A USER DEFINABLE (ADJ.) DELAY BETWEEN STAGES, AND EACH STAGE WILL HAVE A USER DEFINABLE (ADJ.) MINIMUM RUNTIME.

THE COOLING WILL BE ENABLED WHENEVER:
- OUTSIDE AIR TEMPERATURE IS GREATER THAN 60°F (ADJ.).
- AND THE ECONOMIZER (IF PRESENT) IS DISABLED OR FULLY OPEN.
- AND THE ZONE TEMPERATURE IS ABOVE COOLING SETPOINT.
- AND THE SUPPLY FAN STATUS IS ON.
- AND THE HEATING IS NOT ACTIVE.

GAS HEATING STAGES:
THE CONTROLLER WILL MEASURE THE ZONE TEMPERATURE AND STAGE THE HEATING TO MAINTAIN ITS HEATING SETPOINT. TO PREVENT SHORT CYCLING, THERE WILL BE A USER DEFINABLE (ADJ.) DELAY BETWEEN STAGES, AND EACH STAGE WILL HAVE A USER DEFINABLE (ADJ.) MINIMUM RUN TIME.

THE HEATING WILL BE ENABLED WHENEVER:
- OUTSIDE AIR TEMPERATURE IS LESS THAN 65°F (ADJ.).
- AND THE ZONE TEMPERATURE IS BELOW HEATING SETPOINT.
- AND THE SUPPLY FAN STATUS IS ON.
- AND THE COOLING IS NOT ACTIVE.

ECONOMIZER:
THE CONTROLLER WILL MEASURE THE ZONE TEMPERATURE AND MODULATE THE ECONOMIZER DAMPERS IN SEQUENCE TO MAINTAIN A SETPOINT 2°F LESS THAN THE ZONE COOLING SETPOINT. THE OUTSIDE AIR DAMPERS WILL MAINTAIN A MINIMUM ADJUSTABLE POSITION OF 20% (ADJ. TO MAINTAIN MIN. OA CFM LISTED ON EQUIPMENT SCHEDULE) OPEN WHENEVER OCCUPIED.

THE ECONOMIZER WILL BE ENABLED WHENEVER:
- OUTSIDE AIR TEMPERATURE IS LESS THAN 75°F (ADJ.).
- AND THE OUTSIDE AIR TEMPERATURE IS LESS THAN THE RETURN AIR TEMPERATURE.
- AND THE SUPPLY FAN STATUS IS ON.

THE ECONOMIZER WILL CLOSE WHENEVER:
- MIXED AIR TEMPERATURE DROPS FROM 45°F TO 40°F (ADJ.).
- OR ON LOSS OF SUPPLY FAN STATUS.
- OR THE FREEZESTAT (IF PRESENT) IS ON.

THE OUTSIDE AND EXHAUST AIR DAMPERS WILL CLOSE AND THE RETURN AIR DAMPER WILL OPEN WHEN THE UNIT IS OFF. IF OPTIMAL START UP IS AVAILABLE, THE MIXED AIR DAMPER WILL OPERATE AS DESCRIBED IN THE OCCUPIED MODE EXCEPT THAT THE OUTSIDE AIR DAMPER WILL MODULATE TO FULLY CLOSED.

MINIMUM OUTSIDE AIR VENTILATION – FIXED PERCENTAGE:
THE OUTSIDE AIR DAMPERS WILL MAINTAIN A MINIMUM POSITION (ADJ.) DURING BUILDING OCCUPIED HOURS AND BE CLOSED DURING UNOCCUPIED HOURS.

MIXED AIR TEMPERATURE:
THE CONTROLLER WILL MONITOR THE MIXED AIR TEMPERATURE AND USE AS REQUIRED FOR ECONOMIZER CONTROL (IF PRESENT) OR PREHEATING CONTROL (IF PRESENT).

ALARMS WILL BE PROVIDED AS FOLLOWS:
- HIGH MIXED AIR TEMP: IF THE MIXED AIR TEMPERATURE IS GREATER THAN 90°F (ADJ.).
- LOW MIXED AIR TEMP: IF THE MIXED AIR TEMPERATURE IS LESS THAN 45°F (ADJ.).

RETURN AIR TEMPERATURE:
THE CONTROLLER WILL MONITOR THE RETURN AIR TEMPERATURE AND USE AS REQUIRED FOR ECONOMIZER CONTROL (IF PRESENT).

ALARMS WILL BE PROVIDED AS FOLLOWS:
- HIGH RETURN AIR TEMP: IF THE RETURN AIR TEMPERATURE IS GREATER THAN 90°F (ADJ.).
- LOW RETURN AIR TEMP: IF THE RETURN AIR TEMPERATURE IS LESS THAN 45°F (ADJ.).

SUPPLY AIR TEMPERATURE:
THE CONTROLLER WILL MONITOR THE SUPPLY AIR TEMPERATURE.

ALARMS WILL BE PROVIDED AS FOLLOWS:
- HIGH SUPPLY AIR TEMP: IF THE SUPPLY AIR TEMPERATURE IS GREATER THAN 120°F (ADJ.).
- LOW SUPPLY AIR TEMP: IF THE SUPPLY AIR TEMPERATURE IS LESS THAN 45°F (ADJ.).

DEMAND CONTROL VENTILATION:
THE BMS WILL ADDITIONALLY UTILIZE A ZONE CO2 SENSOR FOR DEMAND CONTROLLED VENTILATION – RESETTING THE ECONOMIZER MINIMUM POSITION BASED ON THE ZONE CO2 LEVEL.

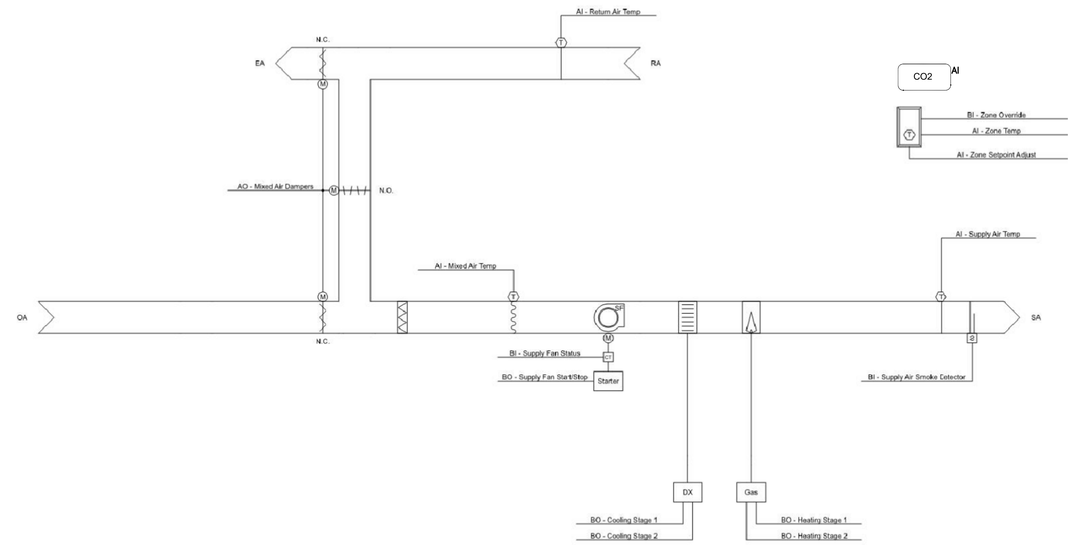

SINGLE ZONE AC UNIT CONTROL DIAGRAM

SCALE : NONE

1 / M6.1

RUN CONDITIONS – SCHEDULED:
THE FAN WILL RUN ACCORDING TO A USER DEFINABLE SCHEDULE.

FAN:
THE FAN WILL HAVE A USER DEFINABLE (ADJ.) MINIMUM RUNTIME.

FAN STATUS:
THE CONTROLLER WILL MONITOR THE FAN STATUS.

ALARMS WILL BE PROVIDED AS FOLLOWS:
- FAN FAILURE: COMMANDED ON, BUT THE STATUS IS OFF.
- FAN IN HAND: COMMANDED OFF, BUT THE STATUS IS ON.
- FAN RUNTIME EXCEEDED: FAN STATUS RUNTIME EXCEEDS A USER DEFINABLE LIMIT (ADJ.).

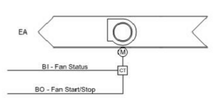

EXHAUST FAN CONTROL DIAGRAM

SCALE : NONE

3 / M6.1

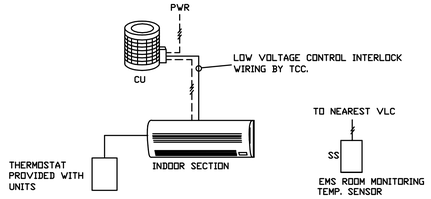

1. TYPICAL FOR ALL UNITS.
2. MOUNT MANUFACTURER'S THERMOSTAT IN ROOM SERVED BY UNIT.
3. MOUNT SS EMS SENSORS ADJACENT TO THERMOSTAT.

SAC/SCU CONTROL DIAGRAM

SCALE : NONE

4 / M6.1

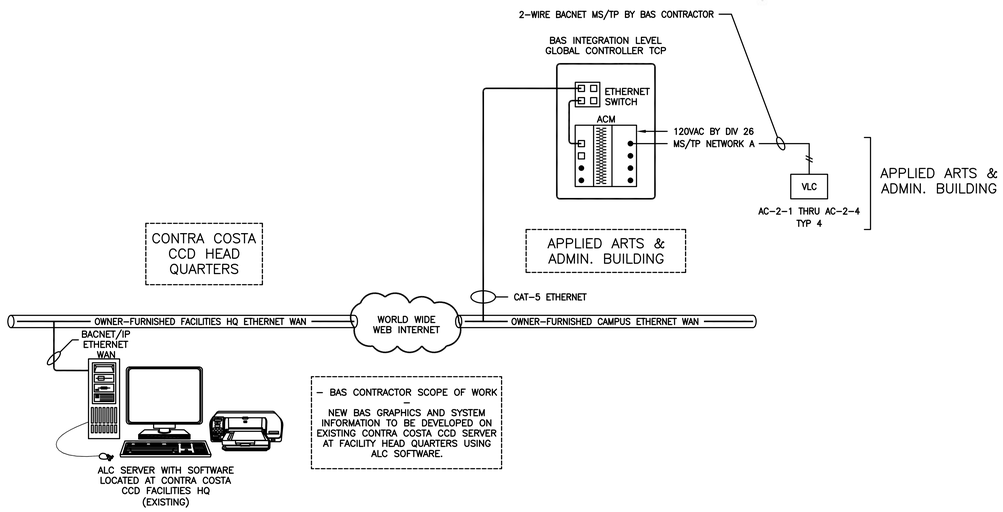

CONTROL SYSTEM ARCHITECTURE

SCALE : NONE

5 / M6.1

RUN CONDITIONS – SCHEDULED:
THE UNIT WILL RUN ACCORDING TO A USER DEFINABLE TIME SCHEDULE IN THE FOLLOWING MODES:
- OCCUPIED MODE: THE UNIT WILL MAINTAIN
- A 75°F (ADJ.) COOLING SETPOINT
- A 70°F (ADJ.) HEATING SETPOINT.

- UNOCCUPIED MODE (NIGHT SETBACK): THE UNIT WILL MAINTAIN
- A 85°F (ADJ.) COOLING SETPOINT.
- A 55°F (ADJ.) HEATING SETPOINT.

ALARMS WILL BE PROVIDED AS FOLLOWS:
- HIGH ZONE TEMP: IF THE ZONE TEMPERATURE IS GREATER THAN THE COOLING SETPOINT BY A USER DEFINABLE AMOUNT (ADJ.).
- LOW ZONE TEMP: IF THE ZONE TEMPERATURE IS LESS THAN THE HEATING SETPOINT BY A USER DEFINABLE AMOUNT (ADJ.).

MINIMUM VENTILATION ON CARBON DIOXIDE (CO2) CONCENTRATION:
WHEN IN THE OCCUPIED MODE, THE CONTROLLER WILL MEASURE THE ZONE CO2 CONCENTRATION AND MODULATE THE ZONE DAMPER OPEN ON RISING CO2 CONCENTRATIONS, OVERRIDING NORMAL DAMPER OPERATION TO MAINTAIN A CO2 SETPOINT OF NOT MORE THAN 750 PPM (ADJ.).

ALARMS WILL BE PROVIDED AS FOLLOWS:
- HIGH ZONE CARBON DIOXIDE CONCENTRATION: IF THE ZONE CO2 CONCENTRATION IS GREATER THAN 1000 PPM (ADJ.).

ZONE SETPOINT ADJUST:
THE OCCUPANT WILL BE ABLE TO ADJUST THE ZONE TEMPERATURE HEATING AND COOLING SETPOINTS AT THE ZONE SENSOR.

ZONE OPTIMAL START:
THE UNIT WILL USE AN OPTIMAL START ALGORITHM FOR MORNING START–UP. THIS ALGORITHM WILL MINIMIZE THE UNOCCUPIED WARM–UP OR COOL–DOWN PERIOD WHILE STILL ACHIEVING COMFORT CONDITIONS BY THE START OF SCHEDULED OCCUPIED PERIOD.

ZONE UNOCCUPIED OVERRIDE:
A TIMED LOCAL OVERRIDE CONTROL WILL ALLOW AN OCCUPANT TO OVERRIDE THE SCHEDULE AND PLACE THE UNIT INTO AN OCCUPIED MODE FOR AN ADJUSTABLE PERIOD OF TIME. AT THE EXPIRATION OF THIS TIME, CONTROL OF THE UNIT WILL AUTOMATICALLY RETURN TO THE SCHEDULE.

VARIABLE VOLUME TERMINAL UNIT – FLOW CONTROL:
THE UNIT WILL MAINTAIN ZONE SETPOINTS BY CONTROLLING THE AIRFLOW THROUGH ONE OF THE FOLLOWING:

OCCUPIED:
- WHEN ZONE TEMPERATURE IS GREATER THAN ITS COOLING SETPOINT, THE ZONE DAMPER WILL MODULATE BETWEEN THE MINIMUM OCCUPIED AIRFLOW (ADJ.) AND THE MAXIMUM COOLING AIRFLOW (ADJ.) UNTIL THE ZONE IS SATISFIED.
- WHEN THE ZONE TEMPERATURE IS LESS THAN THE COOLING SETPOINT, THE ZONE DAMPER WILL MAINTAIN THE MINIMUM REQUIRED ZONE VENTILATION (ADJ.).

UNOCCUPIED:
- WHEN THE ZONE IS UNOCCUPIED THE ZONE DAMPER WILL CONTROL TO ITS MINIMUM UNOCCUPIED AIRFLOW (ADJ.).
- WHEN THE ZONE TEMPERATURE IS GREATER THAN ITS COOLING SETPOINT, THE ZONE DAMPER WILL MODULATE BETWEEN THE MINIMUM UNOCCUPIED AIRFLOW (ADJ.) AND THE MAXIMUM COOLING AIRFLOW (ADJ.) UNTIL THE ZONE IS SATISFIED.

REHEATING COIL VALVE:
THE CONTROLLER WILL MEASURE THE ZONE TEMPERATURE AND MODULATE THE REHEATING COIL VALVE OPEN ON A "DUAL–MAXIMUM" CONTROL SEQUENCE TO MEET ASHRAE RP–1455 OR GUIDELINE 36.

DISCHARGE AIR TEMPERATURE:
THE CONTROLLER WILL MONITOR THE DISCHARGE AIR TEMPERATURE.

ALARMS WILL BE PROVIDED AS FOLLOWS:
- HIGH DISCHARGE AIR TEMP: IF THE DISCHARGE AIR TEMPERATURE IS GREATER THAN 120°F (ADJ.).
- LOW DISCHARGE AIR TEMP: IF THE DISCHARGE AIR TEMPERATURE IS LESS THAN 40°F (ADJ.).

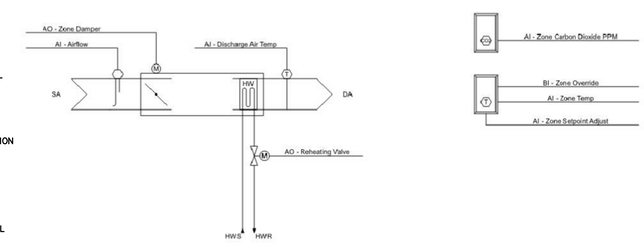

VARIABLE AIR VOLUME TERMINAL UNIT CONTROL DIAGRAM

SCALE : NONE

2 / M6.1

tBP architecture planning interiors
tBP/Architecture
1777 Oakland Boulevard, Suite 320
Walnut Creek, CA 94596
ph: 925.246.6418
architect

DATE SIGNED: 03/21/18

CAPITAL ENGINEERING CONSULTANTS, INC.
Rancho Cordova, California
TD – RCC/MJR/JCH 160761.00
PM – DESIGN TEAM PROJECT NO.
consultant

IDENTIFICATION STAMP
DIV. OF THE STATE ARCHITECT
OFFICE OF REGULATION SERVICES
APPL # 01-
FILE NO. 7-C1
AC ____ RS ____ SS ____
DATE ____

DIVISION OF THE STATE ARCHITECT
1515 CLAY STREET
OAKLAND, CA94612
ph:(510) 622-3101
agency

C-4008 APPLIED ARTS & ADMIN RENOVATION

2600 MISSION BELL DRIVE, SAN PABLO, CA 94806

CONTRA COSTA COMMUNITY COLLEGE DISTRICT
500 COURT STREET MARTINEZ, CA 94553

owner

tBP project number:	20865.00
scale: NONE	
drawn by: JCH	checked by: RCC
date: SEPTEMBER 18, 2017	

rev:	date:	description:
	8/17/2017	BID SET
	4/25/2019	RECORD DRAWINGS

THIS DRAWING AND THE DESIGNS, DEPICTIONS, IDEAS AND OTHER INFORMATION CONTAINED HEREIN CONSTITUTE UNPUBLISHED WORK OF tBP/ARCHITECTURE AND SHALL REMAIN PROPERTY OF tBP/ARCHITECTURE IN PERPETUITY. NO PART THEREOF SHALL BE REPRODUCED, DISCLOSED, DISTRIBUTED, SOLD, PUBLISHED OR OTHERWISE USED IN ANY WAY WITHOUT THE ADVANCED EXPRESS WRITTEN CONSENT OF tBP/ARCHITECTURE.

drawing title:
MECHANICAL CONTROL DIAGRAMS

drawing no.:
M6.1
drawing of

Record Dwgs

PLUMBING EQUIPMENT SCHEDULE

SYMBOL	DESCRIPTION
AC 1	**AIR COMPRESSOR-1:** "INGERSOLL RAND", MODEL SS5L5 SINGLE DUTY, 5HP PUMP, VERTICAL 60 GALLON ASME TANK SIZED FOR A TOTAL OF 18.1 SCFM AT 90 PSIG. PHYSICAL DATA: 20" x 30" x 71", 310 LBS. PROVIDE HIGH EFFICIENCY CONDENSTATE DRAIN SYSTEM TO AUTOMATICALLY REMOVE OIL FROM COMPRESSED AIR CONDENSATE LINE. INSTALL IN ACCORDANCE WITH MANUFACTURER'S RECOMMENDATIONS. "INGERSOLL RAND", MODEL D42IN REFRIGERATED DRYER-FILTER. 18"L x 16"W x 18"H 60 LBS, 0.21 KW, 115V/1 Phase/60 Hz. AIR DRYER SHALL BE A SINGLE PACKAGE REFIGERATED COMPRESSED AIR DRYER WITH BUILT IN CONTROLS AND PUSH BUTTON GRAPHIC CONTROL PANEL. UNIT SHALL BE CONTAINED IN A WEATERPROOF CABINET. DETAIL: SEE 1/P5.1

PLUMBING LEGEND

SYMBOL	ABBREVIATION	DESCRIPTION
	(ABC)	ABOVE CEILING
	(AFF)	ABOVE FINISHED FLOOR
	(AFG)	ABOVE FINISHED GRADE
	(AF , BF)	ABOVE FLOOR , BELOW FLOOR
		BRANCH – TOP CONNECTION
		BRANCH – BOTTOM CONNECTION
or		BRANCH – SIDE CONNECTION
	COP	CAP ON END OF PIPE
	CW	COLD WATER
CD	CD	CONDENSATE DRAIN LINE
ø , ⌀		DIAMETER , SQUARE (FEET)
	(E)	EXISTING TO BE REMOVED
	(E), (N)	EXISTING (E) SHOWN LIGHT, NEW (N) SHOWN HEAVY
	FD	FLOOR DRAIN
FV , FT		FLUSH VALVE , FLUSH TANK
(FA) , (TA)		FROM ABOVE , TO ABOVE
(FB) , (TB)		FROM BELOW , TO BELOW
	GV	GATE VALVE
	GPM	GALLONS PER MINUTE
Ø	CO	CLEANOUT
	HB	HOSE BIBB
	HW	HOT WATER PIPING
D	D	DRAIN
	(N) , (E)	NEW , EXISTING
	(NTS)	NOT TO SCALE
	OH	OVERHEAD
	POC	POINT OF CONNECTION
	(R) , (D)	RISE , DROP
		RISER DOWN (ELBOW)
		RISER UP (ELBOW)
	S, W	SOIL, WASTE OR SANITARY SEWER
	S, W	SOIL, WASTE OR SANITARY SEWER EXISTING
	TP	TRAP PRIMER VALVE
TP		TRAP PRIMER PIPING
	(TYP)	TYPICAL
	V	VENT PIPING
V , VR , VTR		VENT , VENT RISER , VENT THRU ROOF
	WCO	WALL CLEANOUT
	WHA	WATER HAMMER ARRESTER

MEP COMPONENT ANCHORAGE NOTE

ALL MECHANICAL, PLUMBING, AND ELECTRICAL COMPONENTS SHALL BE ANCHORED AND INSTALLED PER THE DETAILS ON THE DSA APPROVED CONSTRUCTION DOCUMENTS. WHERE NO DETAIL IS INDICATED, THE FOLLOWING COMPONENTS SHALL BE ANCHORED OR BRACED TO MEET THE FORCE AND DISPLACEMENT REQUIREMENTS PRESCRIBED IN THE 2013 CBC, SECTIONS 1616A.1.18 THROUGH 1616A.1.26 AND ASCE 7–10 CHAPTER 13, 26 AND 30.

1. ALL PERMANENT EQUIPMENT AND COMPONENTS.
2. TEMPORARY OR MOVABLE EQUIPMENT THAT IS PERMANENTLY ATTACHED (e.g. HARD WIRED) TO THE BUILDING UTILITY SERVICES SUCH AS ELECTRICITY, GAS OR WATER.
3. MOVABLE EQUIPMENT WHICH IS STATIONED IN ONE PLACE FOR MORE THAN 8 HOURS AND HEAVIER THAN 400 POUNDS OR HAS A CENTER OF MASS LOCATED 4 FEET OR MORE ABOVE THE ADJACENT FLOOR OR ROOF LEVEL THAT DIRECTLY SUPPORT THE COMPONENT ARE REQUIRED TO BE ANCHORED WITH TEMPORARY ATTACHMENTS.

THE FOLLOWING MECHANICAL AND ELECTRICAL COMPONENTS SHALL BE POSITIVELY ATTACHED TO THE STRUCTURE, BUT THE ATTACHMENT NEED NOT BE DETAILED ON THE PLANS. THESE COMPONENTS SHALL HAVE FLEXIBLE CONNECTIONS PROVIDED BETWEEN THE COMPONENT AND ASSOCIATED DUCTWORK, PIPING, AND CONDUIT.

A. COMPONENTS WEIGHING LESS THAN 400 POUNDS AND HAVE A CENTER OF MASS LOCATED 4 FEET OR LESS ABOVE THE ADJACENT FLOOR OR ROOF LEVEL THAT DIRECTLY SUPPORT THE COMPONENT.
B. COMPONENTS WEIGHING LESS THAN 20 POUNDS, OR IN THE CASE OF DISTRIBUTION SYSTEMS, LESS THAN 5 POUNDS PER FOOT, WHICH ARE SUSPENDED FROM A ROOF OR FLOOR OR HUNG FROM A WALL.

FOR THOSE ELEMENTS THAT DO NOT REQUIRE DETAILS ON THE APPROVED DRAWINGS, THE INSTALLATION SHALL BE SUBJECT TO THE APPROVAL OF THE DESIGN PROFESSIONAL IN GENERAL RESPONSIBLE CHARGE OR STRUCTURAL ENGINEER DELEGATED RESPONSIBILITY AND THE DSA DISTRICT STRUCTURAL ENGINEER. THE PROJECT INSPECTOR WILL VERIFY THAT ALL COMPONENTS AND EQUIPMENT HAVE BEEN ANCHORED IN ACCORDANCE WITH ABOVE REQUIREMENTS.

PIPING, DUCTWORK & ELECTRICAL DISTRIBUTION SYSTEM BRACING NOTE

PIPING, DUCTWORK, AND ELECTRICAL DISTRIBUTION SYSTEMS SHALL BE BRACED TO COMPLY WITH THE FORCES AND DISPLACEMENTS PRESCRIBED IN ASCE 7–10 SECTION 13.3 AS DEFINED IN ASCE 7–10 SECTION 13.6.5.6, 13.6.7, 13.6.8, AND 2016 CBC, SECTIONS 1616A.1.23, 1616A.1.24, 1616A.1.25 AND 1616A.1.26.

THE METHOD OF SHOWING BRACING AND ATTACHMENTS TO THE STRUCTURE FOR THE IDENTIFIED DISTRIBUTION SYSTEM ARE AS NOTED BELOW. WHEN BRACING AND ATTACHMENTS ARE BASED ON PREAPPROVED INSTALLATION GUIDE (e.g., SMACNA OR OSHPD OPM). COPIES OF THE BRACING SYSTEM INSTALLATION GUIDE OR MANUAL SHALL BE AVAILABLE ON THE JOBSITE PRIOR TO THE START OF AND DURING THE HANGING AND BRACING OF THE DISTRIBUTION SYSTEMS. THE STRUCTURAL ENGINEER OF RECORD SHALL VERIFY THE ADEQUACY OF THE STRUCTURE TO SUPPORT THE HANGER AND BRACE LOADS.

MECHANICAL PIPING (MP), MECHANICAL DUCTS (MD), PLUMBING PIPING (PP), ELECTRICAL DISTRIBUTION SYSTEMS (E):

MP☐ MD☐ PP☐ E ☐	OPTION 1: DETAILED ON THE APPROVED DRAWINGS WITH PROJECT SPECIFIC NOTES AND DETAILS
MP☐ MD☐ PP☒ E ☐	OPTION 2: SHALL COMPLY WITH THE APPLICABLE OSHPD PRE–APPROVED (OPM #) #0043–13.
MP☐ MD☐ PP☐	OPTION 3: SHALL COMPLY WITH THE SMACNA SEISMIC RESTRAINT MANUAL. OSHPD EDITION (2009), INCLUDING ANY ADDENDA. FASTENERS AND OTHER ATTACHMENTS NOT SPECIFICALLY IDENTIFIED IN THE SMACNA SEISMIC RESTRAINT MANUAL, OSHPD EDITION, ARE DETAILED ON THE APPROVED DRAWINGS WITH PROJECT SPECIFIC NOTES AND DETAILS. THE DETAILS SHALL ACCOUNT FOR THE APPLICABLE SEISMIC HAZARD LEVEL ____ AND CONNECTION LEVEL ____ FOR THE PROJECT AND CONDITIONS.

PLUMBING GENERAL NOTES

1. DRAWINGS SHALL BE CONSIDERED DIAGRAMMATIC ONLY. CONTRACTOR SHALL FIELD VERIFY EXACT LOCATIONS, SIZES, AND ELEVATIONS OF ALL ITEMS SHOWN AS EXISTING PRIOR TO DEMOLITION OR THE INSTALLATION OF ANY NEW WORK.
2. WHEN PLACING NEW PLUMBING FIXTURES, CONTRACTOR SHALL VERIFY LOCATIONS OF PLUMBING VENTS. OFFSET VENTS THAT TERMINATE WITHIN 10 FEET OF HVAC UNITS OUTDOOR AIR INTAKES. CONTRACTOR SHALL FIELD VERIFY PRIOR TO BID WHERE THE INTERFERENCE'S ARE AND PRICE ACCORDINGLY OR MAKE ALLOWANCES IN BID.
3. THE DRAWINGS ARE NOT INTENDED TO SHOW EVERY OFFSET OR FITTING OR EVERY STRUCTURAL DIFFICULTY THAT MAY BE ENCOUNTERED DURING INSTALLATION OF THE WORK. LOCATION OF ALL ITEMS NOT DEFINITELY FIXED BY DIMENSIONS ARE APPROXIMATE ONLY. EXACT LOCATIONS NECESSARY TO SECURE BEST CONDITIONS AND RESULTS MUST BE DETERMINED AT THE JOB SITE AND SHALL HAVE THE APPROVAL OF THE ARCHITECT BEFORE BEING INSTALLED.
4. OBTAIN RECORD DRAWINGS OF THE EXISTING CONSTRUCTION FROM THE OWNERS FOR INFORMATION ON EXISTING CONDITIONS.
5. ALL VALVES SHOWN SHALL BE FULL LINE SIZE UNLESS OTHERWISE NOTED.
6. USE CAUTION WHEN SAW–CUTTING THROUGH EXISTING CONCRETE FLOOR OR WALL CONSTRUCTION FOR THE INSTALLATION OF MECHANICAL/PLUMBING SYSTEMS TO AVOID CUTTING (E) REBAR AT EDGE OF OPENING. LEAVE SUFFICIENT REBAR EXPOSED TO TIE NEW REINFORCING FOR REPLACEMENT CONCRETE AND OR OTHER STRUCTURAL ATTACHMENTS FOR NEW CONSTRUCTION.
7. CLOSELY COORDINATE ALL WORK WITH OTHER TRADES PRIOR TO TRENCHING, DEMOLITION OR INSTALLATION OF NEW. IDENTIFY SIZE AND LOCATIONS OF ALL PENETRATIONS THROUGH FOUNDATIONS, WALLS OR ROOFS PRIOR TO FABRICATION OF ANY SYSTEMS OR ORDERING MATERIALS AFFECTED BY POSSIBLE COORDINATION CONFLICTS.
8. REFER TO ARCHITECTURAL DESCRIPTION OF CONSTRUCTION PHASING. PROVIDE SEQUENCED DEMOLITION, TEMPORARY SERVICES AND SEQUENCED CONSTRUCTION IN ORDER TO MAINTAIN SERVICES TO OCCUPIED PORTIONS OF THE FACILITY.
9. AFTER DEMOLITION OF EXISTING EQUIPMENT AND ACCESSORIES, PATCH ALL SURFACES THAT WILL REMAIN TO MATCH EXISTING ADJACENT SURFACES.
10. OFFSET ALL RISERS AND DROPS TO AVOID PENETRATIONS AT TOP PLATES.
11. RESET ALL EXISTING (THAT ARE REMAINING) FLOOR CLEANOUTS & FLOOR DRAIN TOPS WHERE NEW FLOORING IS INSTALLED.
12. CONTRACTOR SHALL BE RESPONSIBLE FOR ANY REVISIONS, TRANSITIONS, OFFSETS, ETC., TO AVOID DUCTWORK, PIPING, EQUIPMENT OR STRUCTURE AND TO MAKE A COMPLETE AND FUNCTIONING SYSTEM.
13. INSTALL ALL WORK TO CLEAR ARCHITECTURAL, STRUCTURAL MEMBERS AND MECHANICAL SYSTEMS. ADJUST PIPING AS NECESSARY. NO ITEM SUCH AS PIPE, ETC., SHALL BE IN CONTACT WITH ANY EQUIPMENT. INSTALL ALL PIPING AS HIGH AS POSSIBLE OR AS SPECIFIED ON DRAWINGS TO MAINTAIN MAXIMUM ACCESSIBILITY.
14. ALL NEW SANITARY WASTE PIPING SHOWN SHALL BE SLOPED AT $^1/_4$" PER FOOT MINIMUM UNLESS OTHERWISE NOTED ON PLANS. WHERE SLOPES LESS THAN $^1/_4$" PER FOOT ARE INDICATED, CONTRACTOR SHALL SLOPE NEW PIPING UNIFORMLY BETWEEN UPPER TERMINAL OF PIPE AND THE POINT OF CONNECTION TO THE SITE PIPING (AS INDICATED ON CIVIL PLANS) TO ACHIEVE THE MAXIMUM SLOPE POSSIBLE, BUT IN NO CASE SHALL THE PIPING BE SLOPED AT LESS THAN THE MINIMUM SLOPE INDICATED.
15. CONTRACTOR SHALL REFER TO ARCHITECTURAL DRAWINGS FOR CUTTING THRU STRUCTURAL SYSTEM. CONTRACTOR SHALL RECEIVE WRITTEN APPROVAL FROM THE ARCHITECT BEFORE MAKING PENETRATIONS THAT ARE NOT DETAILED ON THE CONSTRUCTION DOCUMENTS.
16. AT THE TIME OF THE DESIGN PHASE, IN MOST AREAS THERE WERE NO AVAILABLE DRAWINGS TO USE AS REFERENCE IN LOCATING THE EXISTING WASTE, VENT AND COLD WATER PIPING. CONTRACTOR TO FIELD VERIFY LOCATIONS OF EXISTING UTILITY SERVICE PRIOR TO INSTALLATION OF NEW PIPING.
17. REFER TO SPECIFICATIONS FOR CURRENT CODES & STANDARDS.
18. WHEN PROVIDING A NEW FIXTURE IN PLACE OF AN EXISTING, THE NEW FIXTURE SHALL CONNECT TO EXISTING DOMESTIC WATER, WASTE AND VENT SYSTEMS. ALL NEW HARDWARE (INCLUDING FIXTURE SUPPORT CARRIER), MATERIALS AND FITTINGS AS REQUIRED TO CONNECT TO EXISTING SYSTEMS SHALL BE PROVIDED. EXTEND (E) PLUMBING SERVICES AS REQUIRED TO MAKE NEW CONNECTIONS. ALL PIPING SHALL BE BEHIND FINISHED SURFACES.

tBP
architecture planning interiors
tBP/Architecture
1777 Oakland Boulevard, Suite 320
Walnut Creek, CA 94596
ph: 925.246.6419
architect

DATE SIGNED: 03/21/18
CAPITAL ENGINEERING CONSULTANTS, INC.
RANCHO CORDOVA, CALIFORNIA
TD – RCC/MJR/JCH 160761.00
PM – DESIGN TEAM PROJECT NO.
consultant

IDENTIFICATION STAMP
DIV. OF THE STATE ARCHITECT
OFFICE OF REGULATION SERVICES
APPL # 01-
FILE NO. 7-C1
AC ___ FLS ___ SS ___
DATE ___

DIVISION OF THE STATE ARCHITECT
1515 CLAY STREET
OAKLAND, CA94612
ph:(510) 622-3101
agency

C-4008 APPLIED ARTS & ADMIN RENOVATION
2600 MISSION BELL DRIVE, SAN PABLO, CA 94806

CONTRA COSTA COMMUNITY COLLEGE DISTRICT
500 COURT STREET MARTINEZ, CA 94553
owner

tBP project number: 20865.00
scale: NONE
drawn by: JCH checked by: MJR
date: SEPTEMBER 18, 2017

rev:	date:	description:
	8/17/2017	BID SET
	4/25/2019	RECORD DRAWINGS

THIS DRAWING AND THE DESIGNS, DEPICTIONS, IDEAS AND OTHER INFORMATION CONTAINED HEREIN CONSTITUTE UNPUBLISHED WORK OF tBP/ARCHITECTURE AND SHALL REMAIN PROPERTY OF tBP/ARCHITECTURE IN PERPETUITY. NO PART THEREOF SHALL BE REPRODUCED, DISCLOSED, DISTRIBUTED, SOLD, PUBLISHED OR OTHERWISE USED IN ANY WAY WITHOUT THE ADVANCED EXPRESS WRITTEN CONSENT OF tBP/ARCHITECTURE.

drawing title:
PLUMBING LEGEND, SCHEDULE & NOTES

drawing no.:
P0.1
drawing of

Record Dwgs

PLUMBING FIXTURE SPECIFICATION & CONNECTION SCHEDULE

ADA	SYMBOL	FIXTURE	FIXTURE MANUFACTURER AND MODEL No.	FAUCET OR VALVE MANUFACTURER AND MODEL No.	TRIM MANUFACTURER AND MODEL No.	REMARKS	VENT	WASTE		COLD WATER		HOT WATER	
								BRANCH	OUTLET	BRANCH	OUTLET	BRANCH	OUTLET
	S-1	SINK HOT & COLD WATER ACCESSIBLE	"ELKAY" MODEL LRADQ151765-BP 17.5" FRONT TO BACK X 15" WIDE X 6.5" DEEP. MODIFIED WITH SINGLE CENTER HOLE AND 18 GAUGE STAINLESS STEEL. PROVIDE REAR DRAIN LOCATION. PROVIDE FACTORY ADHERED VANDAL RESISTANT BACKING PLATE AT FAUCET, AND PROVIDE SLOT AT FAUCET FOR VANDAL RESISTANT PINS. BACKING PLATE SHALL BE 14 GAUGE, 304 STAINLESS STEEL, FORMED AS A CHANNEL.	"T&S" BL-5700-08 LEVER OPERATED DECK-MOUNTED FAUCET, WITH VACUUM BREAKER AND SERRATED NOZZLE OUTLET. PROVIDE T&S BL-5500-01 LEVER HANDLES AND WRIST ACTION CARTRIDGES. PROVIDE FACTORY ADHERED VANDAL RESISTANT BACKING PLATE AT FAUCET, AND PROVIDE SLOTS AT FAUCET FOR VANDAL RESISTANT PINS. BACKING PLATE SHALL BE 14 GAUGE, 304 STAINLESS STEEL, FORMED AS A CHANNEL.	ELKAY LKAD174 OFFSET GRID STRAINER AND P-TRAP. INSTALL P-TRAP FLUSH TO WALL. PROVIDE WALL CLEANOUT AT EACH SINK AS PER SPECIFICATION SECTION 22 10 00, 2.6A1.	FOR ACCESSIBLE SINKS "HANDY-SHIELD" MODEL 3011-2 INSULATOR PROTECTORS	1 1/2"	2"	1 1/2"	3/4"	1/2"	3/4"	1/2"
	S-2	SINK WALL MOUNTED HOT AND COLD WATER STD/ACCESSIBLE	"KOHLER" KINGSTON NO. K-2005 WALL HUNG, VITREOUS CHINA WITH CONTOURED BACK AND SIDE SPLASH SHIELDS, FRONT OVERFLOW, CONCEALED ARM RECESS, 4" CENTERS, 21-1/4" x 18-1/8" D SHAPED BOWL.	CHICAGO" 526-317ABCP FAUCET, RIGID/SWING DOUBLE-BEND SPOUT, VANDAL-PROOF, WRISTBLADE HANDLES.	ADA COMPLIANT. LAVATORY GRID DRAIN WITH 1-1/4" OFFSET TAILPIECE, INTEGRAL PERFORATED GRID NO. 7723.018, CHROME FINISH. MOUNT P-TRAP FLUSH TO WALL. CARRIER: "JAY R. SMITH" 0700 OR ZURN Z1231	MOUNT AT HEIGHT INDICATED ON ARCHITECTURAL DRAWINGS. PROVIDE CONCEALED ARMS AND FLOOR SUPPORT, WITH FEET OF SUPPORT SECURELY ANCHORED TO FLOOR. IN ADDITION ANCHOR TOP OF SUPPORT TO WALL CONSTRUCTION.	1 1/2"	2"	1 1/2"	3/4"	1/2"	3/4"	1/2"
	SS-1	SERVICE SINK FLOOR MOUNTED HOT AND COLD WATER JANITORS	"ACORN" TSH-24-SSC, TERRAZZO-WARE, 24"x24"x12" DEEP FLOOR MOUNTED, TERRAZZO, WITH STAINLESS STEEL CAP ON ALL FOUR TOP SURFACES. UNIT SHALL INCLUDE MODEL KH36 HOSE WITH WALL HANGER, KMH MOP HANGER WITH 3 SPRING LOADED GRIPS ON A STAINLESS STEEL BRACKET.	"CHICAGO" MODEL 897-CP WALL MOUNTED POLISHED CHROME FAUCET WITH VACUUM BREAKER, ADJUSTABLE TOP BRACE AND 3/4" MALE THREADED HOSE OUTLET.		AS PART OF ROUGH-IN FOR FAUCET, PROVIDE SUITABLE BLOCKING FOR TOP BRACE. PROVIDE CAP WITH FLANGE ON SIDES ADJACENT TO WALLS.	2"	3"	3"	3/4"	3/4"	3/4"	3/4"
	WMB	WASHMACHINE WASHER BOX	"ACORN" MODEL 8186 WASH MACHINE BOX.	INTEGRAL	INTEGRAL	WITH HOT AND COLD WATER HOSE BIBBS AND DRAIN CONNECTION	1 1/2"	2"	2"	3/4"	1/2"	3/4"	1/2"
	L-1	LAVATORY WALL MOUNTED HOT AND COLD WATER STD/ACCESSIBLE	"KOHLER" KINGSTON NO. K-2005 WALL HUNG, VITREOUS CHINA WITH CONTOURED BACK AND SIDE SPLASH SHIELDS, FRONT OVERFLOW, CONCEALED ARM RECESS, 4" CENTERS, 21-1/4" x 18-1/8" D SHAPED BOWL.	"CHICAGO" 3600-E2805AB FAUCET, PUSH LEVER WITH AERATOR WITH 0.5 GPM FLOW RATE. WITH VANDAL RESISTANT ECONO-FLO SPRAY OUTLET. WITH IPS CONNECTIONS, ADA COMPLIANT.	ADA COMPLIANT. LAVATORY GRID DRAIN WITH 1-1/4" OFFSET TAILPIECE, INTEGRAL PERFORATED GRID NO. 7723.018, CHROME FINISH. MOUNT P-TRAP FLUSH TO WALL. CARRIER: "JAY R. SMITH" 0700 OR ZURN Z1231	MOUNT AT HEIGHT INDICATED ON ARCHITECTURAL DRAWINGS. PROVIDE CONCEALED ARMS AND FLOOR SUPPORT, WITH FEET OF SUPPORT SECURELY ANCHORED TO FLOOR. IN ADDITION ANCHOR TOP OF SUPPORT TO WALL CONSTRUCTION.	1 1/2"	2"	1 1/2"	3/4"	1/2"	3/4"	1/2"

NOTES:

1. WATER SUPPLIES AND STOPS (REFER TO SPECIFICATION SECTION OR 22 40 00)

   A. PROVIDE 85 PERCENT IPS RED BRASS PIPE, SECURELY ANCHORED TO BUILDING CONSTRUCTION, FOR EACH CONNECTION TO FAUCETS, STOPS, HOSE BIBBS, ETC. EACH FIXTURE, EXCEPT HOSE BIBBS, SHALL HAVE A STOP VALVE INSTALLED ON WATER SUPPLY LINES TO PERMIT REPAIRS WITHOUT SHUTTING OFF WATER MAINS.

   B. PROVIDE ALL WATER SUPPLIES TO FIXTURES WITH COMPRESSION SHUT-OFF STOPS WITH IPS INLETS WITH THREADED BRASS NIPPLES AT PIPE CONNECTION AND LOCK SHIELD LOOSE KEY. PROVIDE COMBINATION FIXTURES WITH COMPRESSION STOP AND IPS INLET ON EACH WATER SUPPLY FITTING. PROVIDE LOOSE KEY HANDLE FOR EACH STOP.

   C. PROVIDE 1/2 INCH RISER TUBES WITH REDUCING COUPLING FOR ALL FIXTURES, UNLESS OTHERWISE NOTED.

2. PIPE, PLUMBING FITTINGS, FIXTURES, SOLDER AND FLUX SHALL COMPLY WITH LEAD FREE REQUIREMENTS OF THE CALIFORNIA HEALTH AND SAFETY CODE SECTION 116875. PROVIDE PRODUCTS LISTED AND LABELED AS COMPLYING WITH NSF 61, ANNEX G, OR PROVIDE OTHER EVIDENCE OF COMPLIANCE WITH THE CALIFORNIA HEALTH AND SAFETY CODE SECTION 116875. PROVIDE PRODUCT SUBMITTAL INFORMATION PROVING COMPLIANCE WITH LEAD FREE REQUIREMENTS.

QC

INI	%

tBP
architecture
planning
interiors

tBP/Architecture
1777 Oakland Boulevard, Suite 320
Walnut Creek, CA 94596
ph: 925.246.6418

architect

DATE SIGNED: 03/21/18

CAPITAL
ENGINEERING CONSULTANTS, INC.
RANCHO CORDOVA, CALIFORNIA

TD - RCC/MJR/JCH 160781.00
PM - DESIGN TEAM PROJECT NO.

consultant

IDENTIFICATION STAMP
DIV. OF THE STATE ARCHITECT
OFFICE OF REGULATION SERVICES
APPL # 01-
FILE NO. 72-C1
AC ____ FLS ____ SS ____
DATE ____

DIVISION OF THE STATE ARCHITECT
1515 CLAY STREET
OAKLAND, CA94612
ph:(510) 622-3101

agency

C-4008 APPLIED ARTS & ADMIN RENOVATION

2600 MISSION BELL DRIVE, SAN PABLO, CA 94806

CONTRA COSTA COMMUNITY COLLEGE DISTRICT

500 COURT STREET MARTINEZ, CA 94553

owner

tBP project number: 20865.00

scale: NONE

drawn by: JCH checked by: MJR

date: SEPTEMBER 18, 2017

rev:	date:	description:
	8/17/2017	BID SET
1	2/2/2018	ASI #11
10	3/16/2018	ASI 10
	4/25/2019	RECORD DRAWINGS

THIS DRAWING AND THE DESIGNS, DEPICTIONS, IDEAS AND OTHER INFORMATION CONTAINED HEREIN CONSTITUTE UNPUBLISHED WORK OF tBP/ARCHITECTURE AND SHALL REMAIN PROPERTY OF tBP/ARCHITECTURE IN PERPETUITY. NO PART THEREOF SHALL BE REPRODUCED, DISCLOSED, DISTRIBUTED, SOLD, PUBLISHED OR OTHERWISE USED IN ANY WAY WITHOUT THE ADVANCED EXPRESS WRITTEN CONSENT OF tBP/ARCHITECTURE.

drawing title:

PLUMBING FIXTURE SCHEDULE

drawing no.:

P0.2

drawing of

Record Dwgs

\\cosmos.com\cwnwork\Project_Dwgs\2016\160781.00\1200 Drawings\1200 AutoCAD Project Files\P0-2.DWG - crosbyjc - August 8, 2018

QC	
INI	%

GENERAL NOTES:

1. PLUMBING DESIGN HAS BEEN BASED ON RECORD DRAWINGS AND SITE OBSERVATIONS OF EXPOSED FEATURES. RECORD DRAWINGS OF EXISTING PLUMBING LINES WERE NOT AVAILABLE FOR MANY OF THE AREAS. CONTRACTOR SHALL INCLUDE IN HIS BID THE COSTS OF CONNECTING NEW FIXTURES TO EXISTING FIXTURE UTILITIES, FIELD INVESTIGATION OF EXISTING CONDITIONS, SELECTIVE DEMOLITION, AND CONCEALED UTILITY LOCATING REVEALED BY DEMOLITION. THE CONTRACTOR SHALL PROVIDE A COMPLETE AND OPERABLE PLUMBING SYSTEM WHICH COMPLIES WITH THE SPECIFICATIONS AND THE 2016 CPC. CONTRACTOR SHALL PERFORM INVESTIGATION OF EXISTING CONDITIONS PRIOR TO INSTALLATION OF NEW WORK. CONTRACTOR SHALL NOTIFY ARCHITECT IMMEDIATELY OF EXISTING CONDITIONS THAT MAY NOT ALLOW INSTALLATION OF NEW FIXTURES AS SHOWN.

DEMOLITION NOTES:

1. REMOVE (E) PLUMBING FIXTURE – CUT & CAP UTILITIES BEYOND ARCHITECTURAL FINISH.
2. REMOVE (E) NATURAL GAS & COMPRESSED AIR OUTLETS – CUT & CAP UTILITIES BEYOND ARCHITECTURAL FINISH AND ABOVE CEILING.

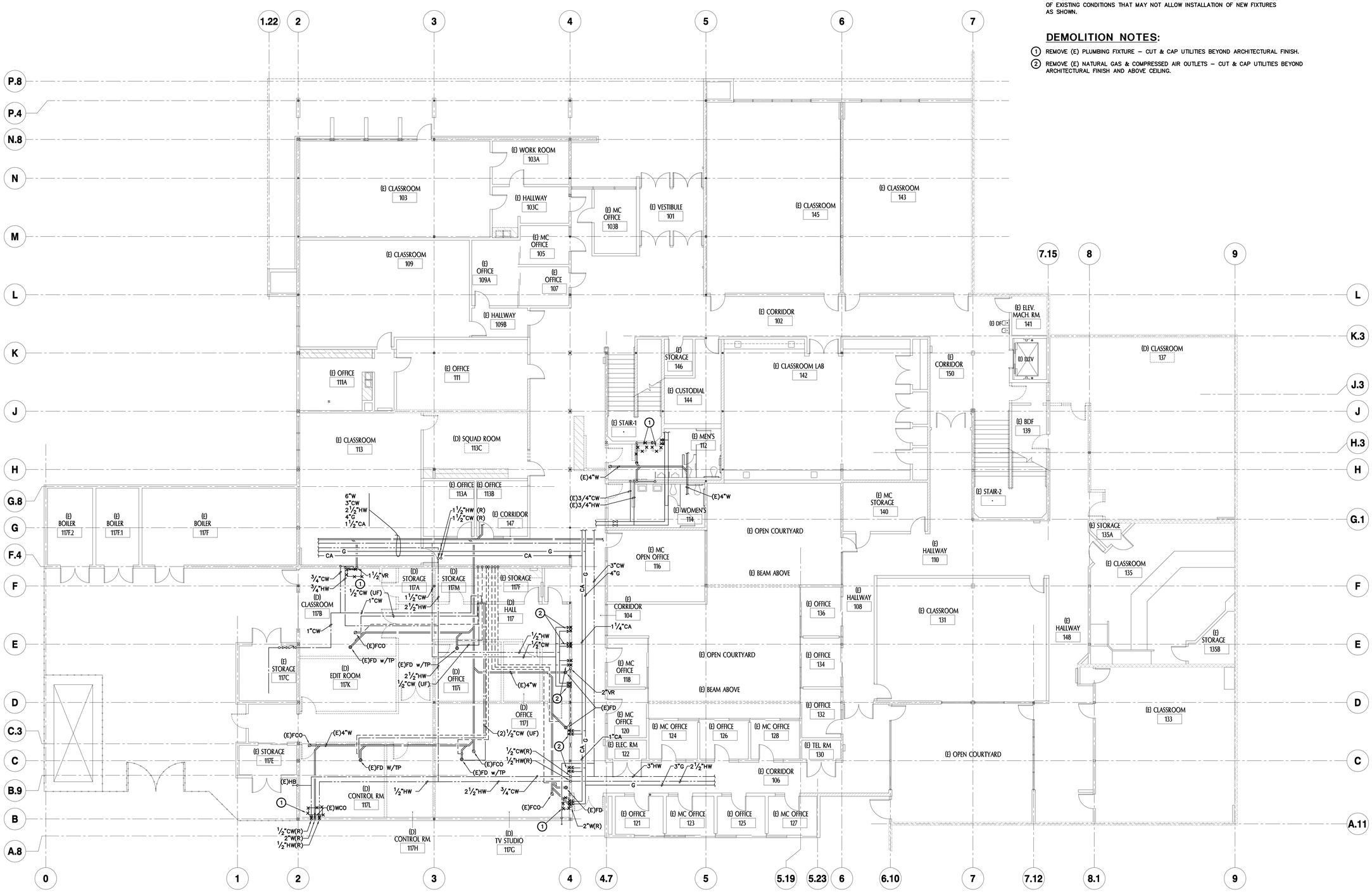

PLUMBING - FIRST FLOOR DEMO PLAN

SCALE : 1/8" = 1'-0"

1 PD2.1

N

tBP
architecture
planning
interiors

tBP/Architecture
1777 Oakland Boulevard, Suite 320
Walnut Creek, CA 94596
ph: 925.246.6418

architect

DATE SIGNED: 03/21/18

CAPITAL ENGINEERING CONSULTANTS, INC.
RANCHO CORDOVA, CALIFORNIA

TD – RCC/MJR/JCH 160781.00
PM – DESIGN TEAM PROJECT NO.

consultant

IDENTIFICATION STAMP
DIV. OF THE STATE ARCHITECT
OFFICE OF REGULATION SERVICES
APPL # 01-
FILE NO. 17-C1
AC ___ FLS ___ SS ___
DATE ___

DIVISION OF THE STATE ARCHITECT
1515 CLAY STREET
OAKLAND, CA94612
ph:(510) 622-3101

agency

C-4008 APPLIED ARTS & ADMIN RENOVATION

2600 MISSION BELL DRIVE, SAN PABLO, CA 94806

CONTRA COSTA COMMUNITY COLLEGE DISTRICT
500 COURT STREET MARTINEZ, CA 94553

owner

tBP project number: 20865.00

scale: 1/8" - 1'0"

drawn by: JCH checked by: MJR

date: SEPTEMBER 18, 2017

rev:	date:	description:
	8/17/2017	BID SET
A	9/18/2017	ADDENDUM A
1A	3/16/2018	ASI 10
	4/25/2019	RECORD DRAWINGS

THIS DRAWING AND THE DESIGNS, DEPICTIONS, IDEAS AND OTHER INFORMATION CONTAINED HEREIN CONSTITUTE UNPUBLISHED WORK OF tBP/ARCHITECTURE AND SHALL REMAIN PROPERTY OF tBP/ARCHITECTURE IN PERPETUITY. NO PART THEREOF SHALL BE REPRODUCED, DISCLOSED, DISTRIBUTED, SOLD, PUBLISHED OR OTHERWISE USED IN ANY WAY WITHOUT THE ADVANCED EXPRESS WRITTEN CONSENT OF tBP/ARCHITECTURE.

drawing title:
PLUMBING - FIRST FLOOR DEMO PLAN

drawing no.:
PD2.1

drawing of

Record Dwgs

GENERAL NOTES:

1. PLUMBING DESIGN HAS BEEN BASED ON RECORD DRAWINGS AND SITE OBSERVATIONS OF EXPOSED FEATURES. RECORD DRAWINGS OF EXISTING PLUMBING LINES WERE NOT AVAILABLE FOR MANY OF THE AREAS. CONTRACTOR SHALL INCLUDE IN HIS BID THE COSTS OF CONNECTING NEW FIXTURES TO EXISTING FIXTURE UTILITIES, FIELD INVESTIGATION OF EXISTING CONDITIONS, SELECTIVE DEMOLITION, AND CONCEALED UTILITY LOCATING REVEALED BY DEMOLITION. THE CONTRACTOR SHALL PROVIDE A COMPLETE AND OPERABLE PLUMBING SYSTEM WHICH COMPLIES WITH THE SPECIFICATIONS AND THE 2016 CPC. CONTRACTOR SHALL PERFORM INVESTIGATION OF EXISTING CONDITIONS PRIOR TO INSTALLATION OF NEW WORK. CONTRACTOR SHALL NOTIFY ARCHITECT IMMEDIATELY OF EXISTING CONDITIONS THAT MAY NOT ALLOW INSTALLATION OF NEW FIXTURES AS SHOWN.
2. CONTRACTOR TO FIELD VERIFY EXACT LOCATIONS, SIZES, ROUTING AND INVERTS OF ALL PIPING PRIOR TO CONSTRUCTION.
3. MAINTAIN SERVICE TO ALL (E) FIXTURES SHOWN TO REMAIN. WORK ON EXISTING UTILITIES SHALL NOT RESULT IN A LACK OF UTILITIES FOR EXISTING FIXTURES SHOWN TO REMAIN.
4. SEE SHEET P0.1 FOR ADDITIONAL NOTES.

DEMOLITION NOTES:

1. DISCONNECT GAS PIPE AND REMOVE BEYOND AS INDICATED.
2. REMOVE CONDENSATE DRAIN PIPING AS INDICATED.
3. REMOVE (E) PLUMBING FIXTURE – CUT AND CAP UTILITIES BEYOND ARCHITECTURAL FINISH.

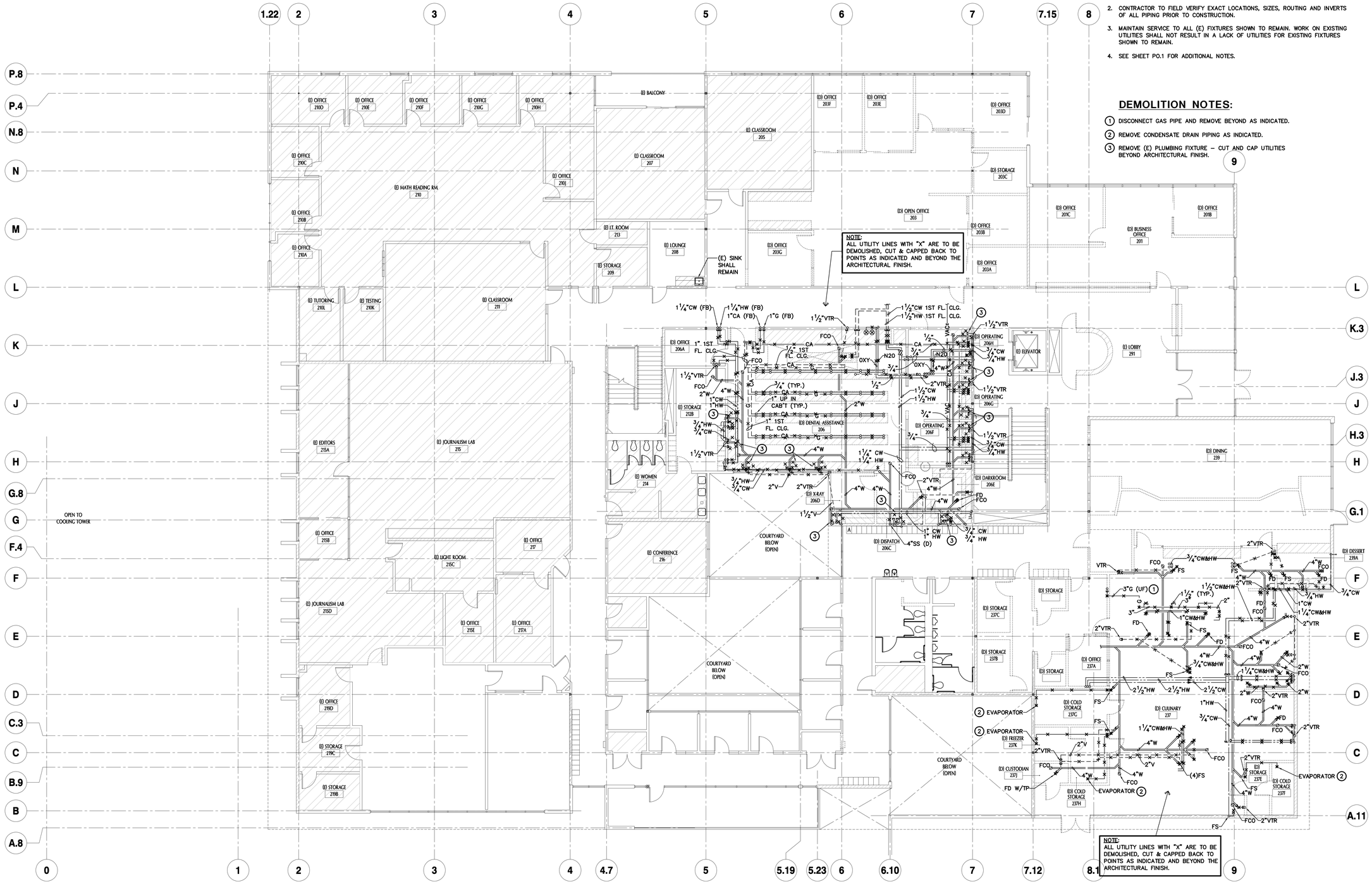

PLUMBING - SECOND FLOOR DEMO PLAN

1 PD2.2

SCALE : 1/8" = 1'-0"

N

QC

INI	%

tBP
architecture
planning
interiors

tBP/Architecture
1777 Oakland Boulevard, Suite 320
Walnut Creek, CA 94596
ph: 925.246.6418

architect

DATE SIGNED: 03/21/18

CAPITAL ENGINEERING CONSULTANTS, INC.
Rancho Cordova, California

TD – RCC/MJR/JCH PM – DESIGN TEAM
160781.00 PROJECT NO.

consultant

IDENTIFICATION STAMP
DIV. OF THE STATE ARCHITECT
OFFICE OF REGULATION SERVICES
APPL # 01-
FILE NO. 7-C1
AC ____ FCS ____ SS ____
DATE ____

DIVISION OF THE STATE ARCHITECT
1515 CLAY STREET
OAKLAND, CA94612
ph:(510) 622-3101

agency

C-4008 APPLIED ARTS & ADMIN RENOVATION

2600 MISSION BELL DRIVE, SAN PABLO, CA 94806

CONTRA COSTA COMMUNITY COLLEGE DISTRICT
500 COURT STREET MARTINEZ, CA 94553

owner

IBP project number:	20865.00
scale:	1/8" - 1'0"
drawn by: JCH	checked by: MJR
date:	SEPTEMBER 18, 2017

rev:	date:	description:
	8/17/2017	BID SET
1	9/18/2017	ADDENDUM A
	4/25/2019	RECORD DRAWINGS

THIS DRAWING AND THE DESIGNS, DEPICTIONS, IDEAS AND OTHER INFORMATION CONTAINED HEREIN CONSTITUTE UNPUBLISHED WORK OF IBP/ARCHITECTURE AND SHALL REMAIN PROPERTY OF IBP/ARCHITECTURE IN PERPETUITY. NO PART THEREOF SHALL BE REPRODUCED, DISCLOSED, DISTRIBUTED, SOLD, PUBLISHED OR OTHERWISE USED IN ANY WAY WITHOUT THE ADVANCED EXPRESS WRITTEN CONSENT OF IBP/ARCHITECTURE.

drawing title:

PLUMBING - SECOND FLOOR DEMO PLAN

drawing no.:

PD2.2

drawing of

Record Dwgs

\\cxpress.com\network\Project_Data\20865\160781.00\1200 Drawings\1200 AutoCAD Project Files\PD2-2.DWG - <cmdsaps> - August 6, 2018

GENERAL NOTES:

1. PLUMBING DESIGN HAS BEEN BASED ON RECORD DRAWINGS AND SITE OBSERVATIONS OF EXPOSED FEATURES. RECORD DRAWINGS OF EXISTING PLUMBING LINES WERE NOT AVAILABLE FOR MANY OF THE AREAS. CONTRACTOR SHALL INCLUDE IN HIS BID THE COSTS OF CONNECTING NEW PLUMBING UTILITIES TO EXISTING, FIELD INVESTIGATION OF EXISTING CONDITIONS AND SELECTIVE. THE CONTRACTOR SHALL PROVIDE A COMPLETE AND OPERABLE PLUMBING SYSTEM WHICH COMPLIES WITH THE SPECIFICATIONS AND THE 2016 CPC. CONTRACTOR SHALL PERFORM INVESTIGATION OF EXISTING CONDITIONS PRIOR TO INSTALLATION OF NEW WORK. CONTRACTOR SHALL NOTIFY ARCHITECT IMMEDIATELY OF EXISTING CONDITIONS THAT MAY NOT ALLOW INSTALLATION OF NEW UTILITIES AS SHOWN.
2. SEE SHEET P0.1 FOR ADDITIONAL NOTES.
3. HVAC UNITS ARE SHOWN FOR THE COORDINATION OF UTILITIES ONLY. FOR CONTINUATION REFER TO HVAC PLAN, SHEET MD2.3.

DEMOLITION SHEET NOTES:

1. EXISTING MAKE-UP AIR UNIT TO BE REMOVED (SEE 1/MD2.3).
2. EXISTING GAS FURNACE TO BE REMOVED (SEE 1/MD2.3).
3. DISCONNECT CONDENSATE DRAIN LINE AND REMOVE BACK TO UNION WITH (E) 1" CD LINE.
4. EXISTING 1" CD LINE TO REMAIN.
5. EXISTING 2" G RISER TO REMAIN. CUT AND CAP EXISTING IN PREPARATION FOR CONNECTING TO NEW. REMOVE BEYOND AS INDICATED.
6. EXISTING AC UNIT TO BE REMOVED (SEE 1/MD2.3).

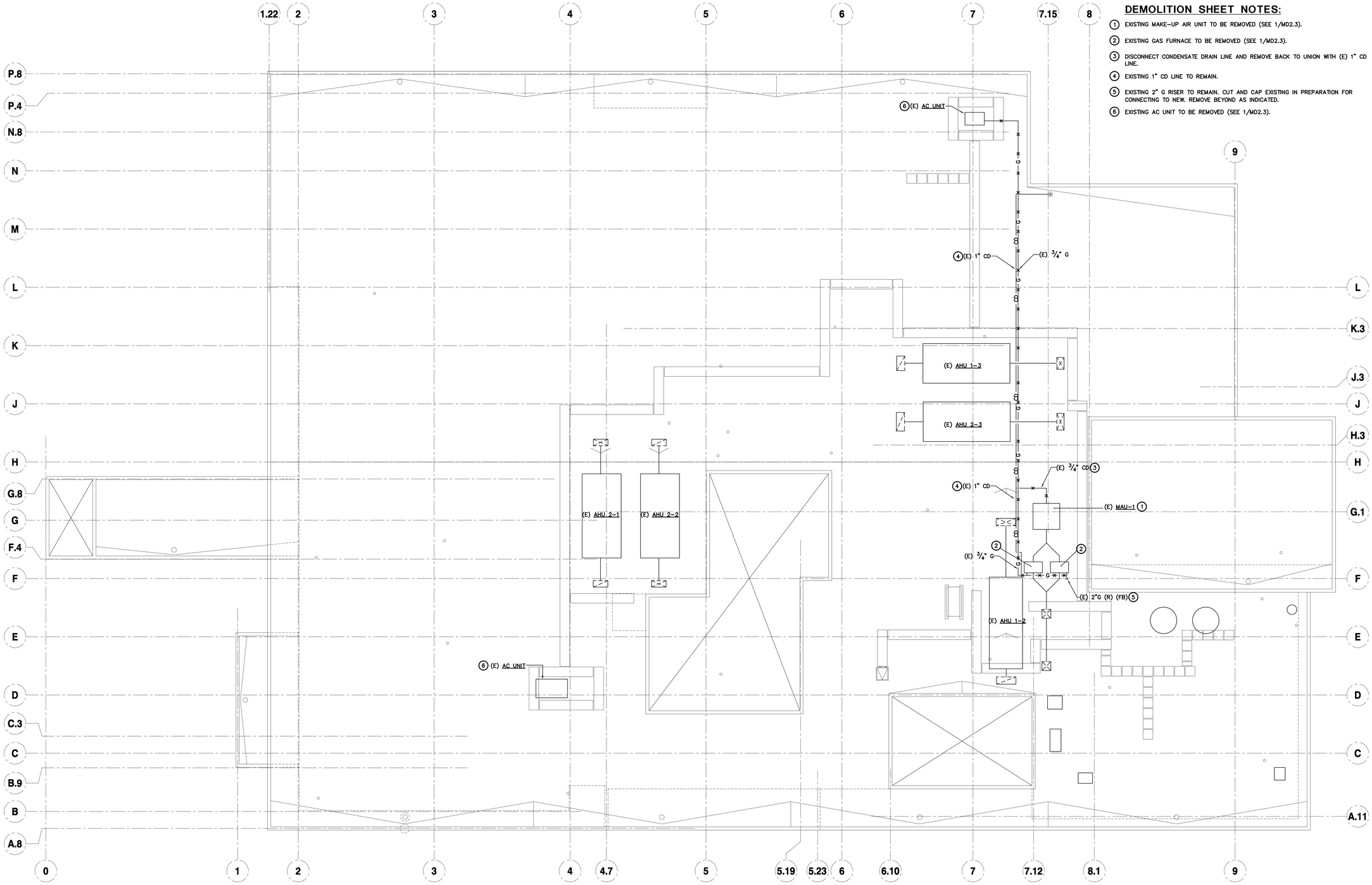

PLUMBING - ROOF DEMOLITION PLAN

SCALE : 1/8" = 1'-0"

1 PD2.3

N

tBP/Architecture
1777 Oakland Boulevard, Suite 320
Walnut Creek, CA 94596
ph: 925.246.6418

architect

DATE SIGNED: 03/21/18

CAPITAL ENGINEERING CONSULTANTS, INC.
RANCHO CORDOVA, CALIFORNIA

TD - RCC/MJR/JCH 160761.00
PM - DESIGN TEAM PROJECT NO.

consultant

IDENTIFICATION STAMP
DIV. OF THE STATE ARCHITECT
OFFICE OF REGULATION SERVICES
APPL # 01-
FILE NO. 7-C1
AC ___ FLS ___ SS ___
DATE ___

DIVISION OF THE STATE ARCHITECT
1515 CLAY STREET
OAKLAND, CA94612
ph:(510) 622-3101

agency

C-4008 APPLIED ARTS & ADMIN RENOVATION

2600 MISSION BELL DRIVE, SAN PABLO, CA 94806

CONTRA COSTA COMMUNITY COLLEGE DISTRICT
500 COURT STREET MARTINEZ, CA 94553

owner

tBP project number: 20865.00

scale: 1/8" - 1'0"

drawn by: JCH checked by: RCC

date: SEPTEMBER 18, 2017

rev:	date:	description:
	8/17/2017	BID SET
	4/25/2019	RECORD DRAWINGS

THIS DRAWING AND THE DESIGNS, DEPICTIONS, IDEAS AND OTHER INFORMATION CONTAINED HEREIN CONSTITUTE UNPUBLISHED WORK OF tBP/ARCHITECTURE AND SHALL REMAIN PROPERTY OF tBP/ARCHITECTURE IN PERPETUITY. NO PART THEREOF SHALL BE REPRODUCED, DISCLOSED, DISTRIBUTED, SOLD, PUBLISHED OR OTHERWISE USED IN ANY WAY WITHOUT THE ADVANCED EXPRESS WRITTEN CONSENT OF tBP/ARCHITECTURE.

drawing title:
PLUMBING
ROOF DEMO PLAN

drawing no.:
PD2.3

drawing of

Record Dwgs

QC	
INI	%

GENERAL NOTES:

1. PLUMBING DESIGN HAS BEEN BASED ON RECORD DRAWINGS AND SITE OBSERVATIONS OF EXPOSED FEATURES. RECORD DRAWINGS OF EXISTING PLUMBING LINES WERE NOT AVAILABLE FOR MANY OF THE AREAS. CONTRACTOR SHALL INCLUDE IN HIS BID THE COSTS OF CONNECTING NEW FIXTURES TO EXISTING FIXTURE UTILITIES, FIELD INVESTIGATION OF EXISTING CONDITIONS, SELECTIVE DEMOLITION, AND CONCEALED UTILITY LOCATING REVEALED BY DEMOLITION. THE CONTRACTOR SHALL PROVIDE A COMPLETE AND OPERABLE PLUMBING SYSTEM WHICH COMPLIES WITH THE SPECIFICATIONS AND THE 2016 CPC. CONTRACTOR SHALL PERFORM INVESTIGATION OF EXISTING CONDITIONS PRIOR TO INSTALLATION OF NEW WORK. CONTRACTOR SHALL NOTIFY ARCHITECT IMMEDIATELY OF EXISTING CONDITIONS THAT MAY NOT ALLOW INSTALLATION OF NEW FIXTURES AS SHOWN.
2. CONTRACTOR TO FIELD VERIFY EXACT LOCATIONS, SIZES, ROUTING AND INVERTS OF ALL PIPING PRIOR TO CONSTRUCTION.
3. ALL PIPING SHALL BE INSTALLED BEHIND FINISHED SURFACES EXCEPT AS NOTED OTHERWISE. SAW CUT AND REMOVE PORTIONS OF ARCHITECTURAL FINISHES AS REQUIRED TO RUN NEW PIPING OR CAP EXISTING PIPING BEHIND ARCHITECTURAL FINISHES. PATCH FINISHES TO MATCH EXISTING ADJACENT SURFACES.
4. SEE SHEET P0.1 FOR ADDITIONAL NOTES.

NEW WORK NOTE:

(1) PROVIDE FIXTURE. CONNECT TO EXISTING DOMESTIC HOT & COLD WATER (AS APPLICABLE), WASTE AND VENT SYSTEMS. PROVIDE ALL HARDWARE (INCLUDING FIXTURE SUPPORT CARRIER WHERE APPLICABLE), MATERIALS AND FITTINGS AS REQUIRED TO CONNECT TO EXISTING SYSTEMS. EXTEND (E) PLUMBING SERVICES AS REQUIRED TO MAKE NEW CONNECTIONS. ALL PIPING SHALL BE BEHIND FINISHED SURFACES.

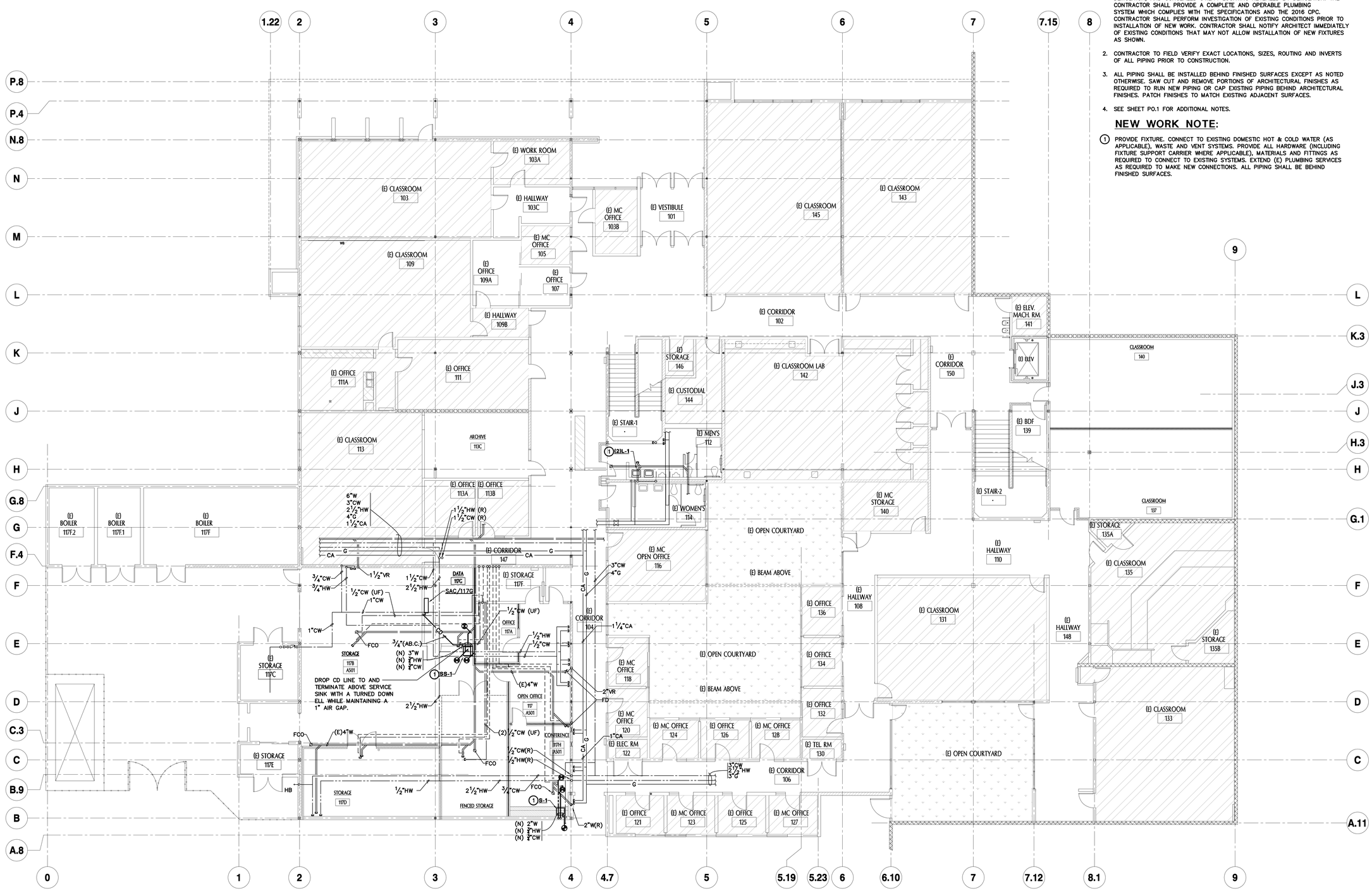

PLUMBING - FIRST FLOOR NEW WORK PLAN

SCALE : 1/8" = 1'-0"

1 / P2.1

N

tBP
architecture
planning
interiors

tBP/Architecture
1777 Oakland Boulevard, Suite 320
Walnut Creek, CA 94596
ph: 925.240.6418

architect

DATE SIGNED: 03/21/18

CAPITAL ENGINEERING CONSULTANTS, INC.
RANCHO CORDOVA, CALIFORNIA

TD – RCC/MJR/JCH 160781.00
PM – DESIGN TEAM PROJECT NO.

consultant

IDENTIFICATION STAMP
DIV. OF THE STATE ARCHITECT
OFFICE OF REGULATION SERVICES
APPL # 01-
FILE NO. 7-C1
AC ___ FLS ___ SS ___
DATE

DIVISION OF THE STATE ARCHITECT
1515 CLAY STREET
OAKLAND, CA94612
ph:(510) 622-3101

agency

C-4008 APPLIED ARTS & ADMIN RENOVATION

2600 MISSION BELL DRIVE, SAN PABLO, CA 94806

CONTRA COSTA COMMUNITY COLLEGE DISTRICT
500 COURT STREET MARTINEZ, CA 94553

owner

tBP project number:	20865.00
scale:	1/8" - 1'0"
drawn by: JCH	checked by: RCC
date:	SEPTEMBER 18, 2017

rev:	date:	description:
	8/17/2017	BID SET
1	3/16/2018	ASI 10
	4/25/2019	RECORD DRAWINGS

THIS DRAWING AND THE DESIGNS, DEPICTIONS, IDEAS AND OTHER INFORMATION CONTAINED HEREIN CONSTITUTE UNPUBLISHED WORK OF tBP/ARCHITECTURE AND SHALL REMAIN PROPERTY OF tBP/ARCHITECTURE IN PERPETUITY. NO PART THEREOF SHALL BE REPRODUCED, DISCLOSED, DISTRIBUTED, SOLD, PUBLISHED OR OTHERWISE USED IN ANY WAY WITHOUT THE ADVANCED EXPRESS WRITTEN CONSENT OF tBP/ARCHITECTURE.

drawing title:
PLUMBING - FIRST FLOOR NEW WORK PLAN

drawing no.:
P2.1

drawing of

Record Dwgs

GENERAL NOTES:

1. PLUMBING DESIGN HAS BEEN BASED ON RECORD DRAWINGS AND SITE OBSERVATIONS OF EXPOSED FEATURES. RECORD DRAWINGS OF EXISTING PLUMBING LINES WERE NOT AVAILABLE FOR MANY OF THE AREAS. CONTRACTOR SHALL INCLUDE IN HIS BID THE COSTS OF CONNECTING NEW FIXTURES TO EXISTING FIXTURE UTILITIES, FIELD INVESTIGATION OF EXISTING CONDITIONS, SELECTIVE DEMOLITION, AND CONCEALED UTILITY LOCATING REVEALED BY DEMOLITION. THE CONTRACTOR SHALL PROVIDE A COMPLETE AND OPERABLE PLUMBING SYSTEM WHICH COMPLIES WITH THE SPECIFICATIONS AND THE 2016 CPC. CONTRACTOR SHALL PERFORM INVESTIGATION OF EXISTING CONDITIONS PRIOR TO INSTALLATION OF NEW WORK. CONTRACTOR SHALL NOTIFY ARCHITECT IMMEDIATELY OF EXISTING CONDITIONS THAT MAY NOT ALLOW INSTALLATION OF NEW FIXTURES AS SHOWN.
2. CONTRACTOR TO FIELD VERIFY EXACT LOCATIONS, SIZES, ROUTING AND INVERTS OF ALL PIPING PRIOR TO CONSTRUCTION.
3. ALL PIPING SHALL BE INSTALLED BEHIND FINISHED SURFACES EXCEPT AS NOTED OTHERWISE. SAW CUT AND REMOVE PORTIONS OF ARCHITECTURAL FINISHES AS REQUIRED TO RUN NEW PIPING OR CAP EXISTING PIPING BEHIND ARCHITECTURAL FINISHES. PATCH FINISHES TO MATCH EXISTING ADJACENT SURFACES.
4. SEE SHEET P0.1 FOR ADDITIONAL NOTES.
5. THE SECOND FLOOR IS A RATED FLOOR, AND ALL PENETRATIONS SHALL BE UL LISTED. REFER TO DETAIL 3/A941.

NEW WORK NOTE:

1. PROVIDE FIXTURE. CONNECT TO EXISTING DOMESTIC HOT & COLD WATER (AS APPLICABLE), WASTE AND VENT SYSTEMS. PROVIDE ALL HARDWARE (INCLUDING FIXTURE SUPPORT CARRIER WHERE APPLICABLE), MATERIALS AND FITTINGS AS REQUIRED TO CONNECT TO EXISTING SYSTEMS. EXTEND (E) PLUMBING SERVICES AS REQUIRED TO MAKE NEW CONNECTIONS. ALL PIPING SHALL BE BEHIND FINISHED SURFACES.

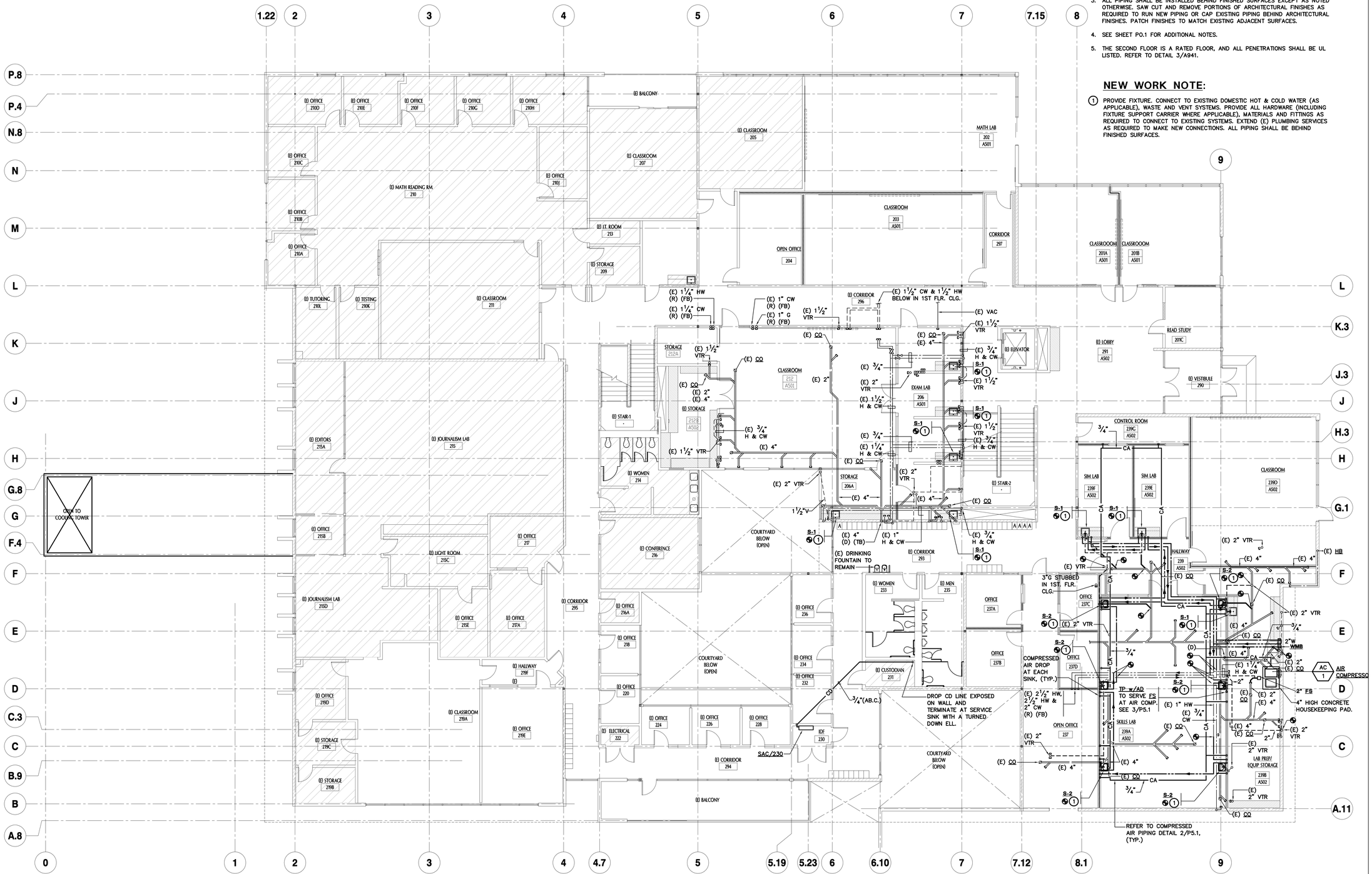

PLUMBING - SECOND FLOOR NEW WORK PLAN

1 / P2.2

SCALE : 1/8" = 1'-0"

N

QC

INI	%

tBP architecture planning interiors

tBP/Architecture
1777 Oakland Boulevard, Suite 320
Walnut Creek, CA 94596
ph: 925.246.6418

architect

DATE SIGNED: 03/21/18

CAPITAL ENGINEERING CONSULTANTS, INC.
RANCHO CORDOVA, CALIFORNIA

TD – RCC/MJR/JCH PM – DESIGN TEAM
160781.00 PROJECT NO.

consultant

IDENTIFICATION STAMP
DIV. OF THE STATE ARCHITECT
OFFICE OF REGULATION SERVICES
APPL # 01-
FILE NO. 7-C1
AC ___ FLS ___ SS ___
DATE

DIVISION OF THE STATE ARCHITECT
1515 CLAY STREET
OAKLAND, CA94612
ph:(510) 622-3101

agency

C-4008 APPLIED ARTS & ADMIN RENOVATION

2600 MISSION BELL DRIVE, SAN PABLO, CA 94806

CONTRA COSTA COMMUNITY COLLEGE DISTRICT
500 COURT STREET MARTINEZ, CA 94553

owner

tBP project number: 20865.00

scale: 1/8" - 1'0"

drawn by: JCH checked by: MJR

date: SEPTEMBER 18, 2017

rev:	date:	description:
	6/17/2017	BID SET
1	9/18/2017	ADDENDUM A
1	2/2/2018	ASI #11
	4/25/2019	RECORD DRAWINGS

THIS DRAWING AND THE DESIGNS, DEPICTIONS, IDEAS AND OTHER INFORMATION CONTAINED HEREIN CONSTITUTE UNPUBLISHED WORK OF tBP/ARCHITECTURE AND SHALL REMAIN PROPERTY OF tBP/ARCHITECTURE IN PERPETUITY. NO PART THEREOF SHALL BE REPRODUCED, DISCLOSED, DISTRIBUTED, SOLD, PUBLISHED OR OTHERWISE USED IN ANY WAY WITHOUT THE ADVANCED EXPRESS WRITTEN CONSENT OF tBP/ARCHITECTURE.

drawing title:
PLUMBING - SECOND FLOOR NEW WORK PLAN

drawing no.:
P2.2

drawing of

Record Dwgs

\\capassociates\networks\Project_Docs\2016\160781.00\1000 Drawings\1205 AutoCAD Project Files\P-2.DWG - <crosspy> - August 6, 2018

QC	
INI	%

GENERAL NOTES:

1. PLUMBING DESIGN HAS BEEN BASED ON RECORD DRAWINGS AND SITE OBSERVATIONS OF EXPOSED FEATURES. RECORD DRAWINGS OF EXISTING PLUMBING LINES WERE NOT AVAILABLE FOR MANY OF THE AREAS. CONTRACTOR SHALL INCLUDE IN HIS BID THE COSTS OF CONNECTING NEW PLUMBING UTILITIES TO EXISTING, FIELD INVESTIGATION OF EXISTING CONDITIONS AND SELECTIVE. THE CONTRACTOR SHALL PROVIDE A COMPLETE AND OPERABLE PLUMBING SYSTEM WHICH COMPLIES WITH THE SPECIFICATIONS AND THE 2016 CPC. CONTRACTOR SHALL PERFORM INVESTIGATION OF EXISTING CONDITIONS PRIOR TO INSTALLATION OF NEW WORK. CONTRACTOR SHALL NOTIFY ARCHITECT IMMEDIATELY OF EXISTING CONDITIONS THAT MAY NOT ALLOW INSTALLATION OF NEW UTILITIES AS SHOWN.
2. SEE SHEET P0.1 FOR ADDITIONAL NOTES.
3. HVAC UNITS ARE SHOWN FOR THE COORDINATION OF UTILITIES ONLY, REFER TO HVAC PLAN, SHEET M2.3
4. FOR GAS AND CONDENSATE PIPING AT AC UNITS, SEE 4/P5.1

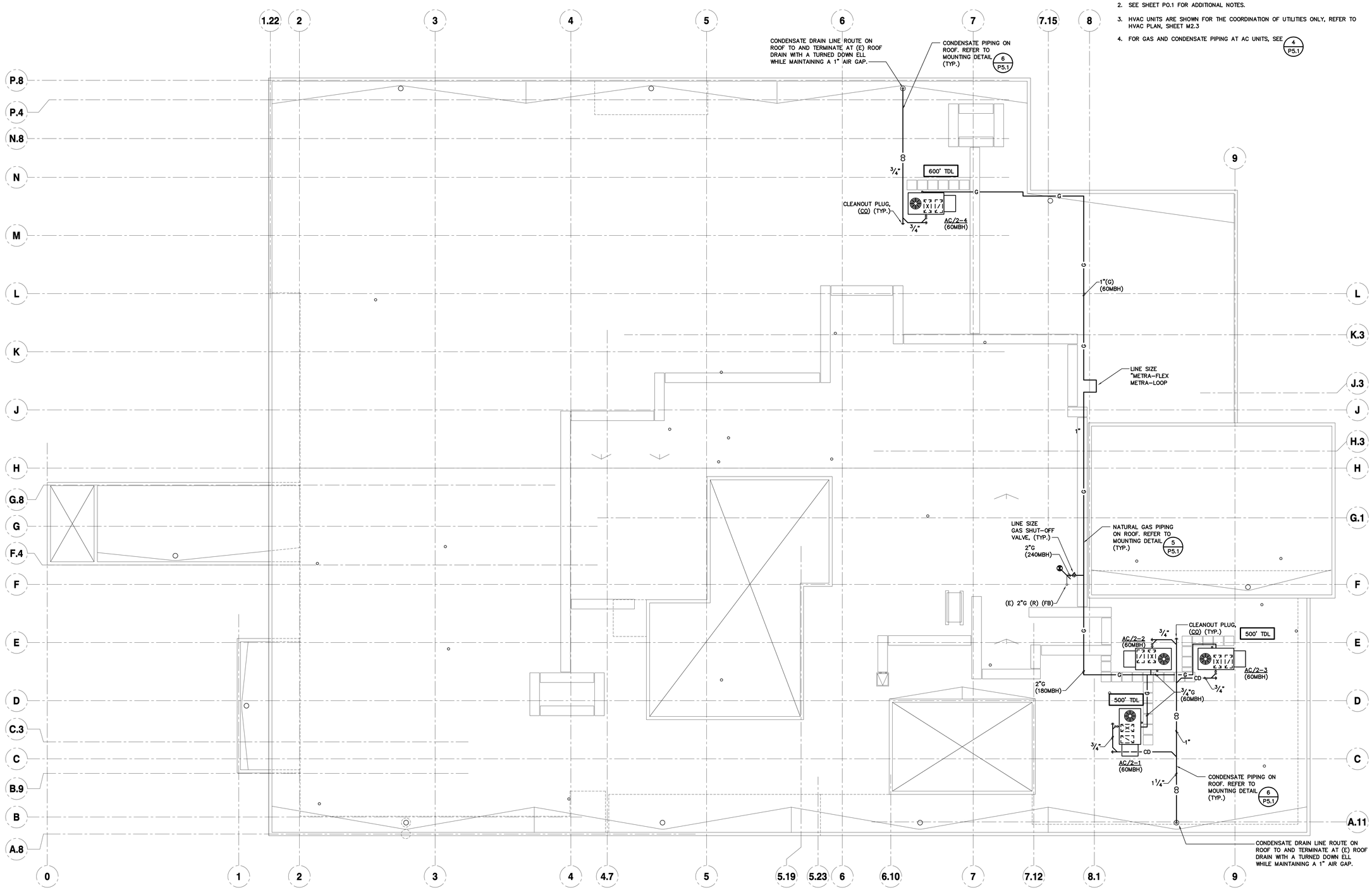

PLUMBING - NEW ROOF WORK PLAN

1/P2.3

SCALE : 1/8" = 1'-0"

N

tBP architecture planning interiors

tBP/Architecture
1777 Oakland Boulevard, Suite 320
Walnut Creek, CA 94596
ph: 925.246.6418

architect

DATE SIGNED: 03/21/18

CAPITAL ENGINEERING CONSULTANTS, INC.
RANCHO CORDOVA, CALIFORNIA

TD – RCC/MJR/JCH 160761.00
PM – DESIGN TEAM PROJECT NO.

consultant

IDENTIFICATION STAMP
DIV. OF THE STATE ARCHITECT
OFFICE OF REGULATION SERVICES
APPL # 01-
FILE NO. 7-C1
AC ___ FCS ___ SS ___
DATE ___

DIVISION OF THE STATE ARCHITECT
1515 CLAY STREET
OAKLAND, CA94612
ph:(510) 622-3101

agency

C-4008 APPLIED ARTS & ADMIN RENOVATION
2600 MISSION BELL DRIVE, SAN PABLO, CA 94806

CONTRA COSTA COMMUNITY COLLEGE DISTRICT
500 COURT STREET MARTINEZ, CA 94553

owner

tBP project number: 20865.00

scale: 1/8" - 1'0"

drawn by: JCH checked by: MJR

date: SEPTEMBER 18, 2017

rev:	date:	description:
	8/17/2017	BID SET
	4/25/2019	RECORD DRAWINGS

THIS DRAWING AND THE DESIGNS, DEPICTIONS, IDEAS AND OTHER INFORMATION CONTAINED HEREIN CONSTITUTE UNPUBLISHED WORK OF tBP/ARCHITECTURE AND SHALL REMAIN PROPERTY OF tBP/ARCHITECTURE IN PERPETUITY. NO PART THEREOF SHALL BE REPRODUCED, DISCLOSED, DISTRIBUTED, SOLD, PUBLISHED OR OTHERWISE USED IN ANY WAY WITHOUT THE ADVANCED EXPRESS WRITTEN CONSENT OF tBP/ARCHITECTURE.

drawing title:
PLUMBING - NEW ROOF WORK PLAN

drawing no.:
P2.3

drawing of

Record Dwgs

\\cosyeas.lan\network\Project_Data\2016\160761.00\100 Drawings\100 AutoCAD Project Files\P2-3.DWG -- crosbyjo -- August 8, 2018

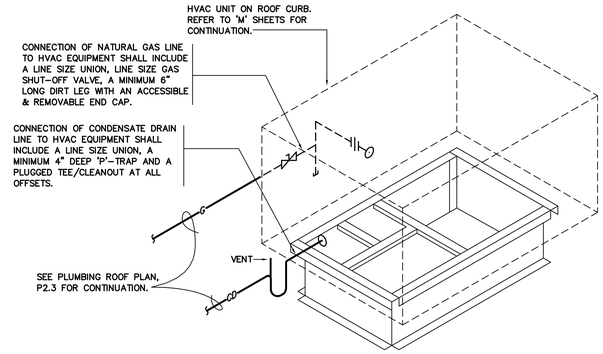

AC UNIT PIPING

SCALE : NONE

4 / P5.1

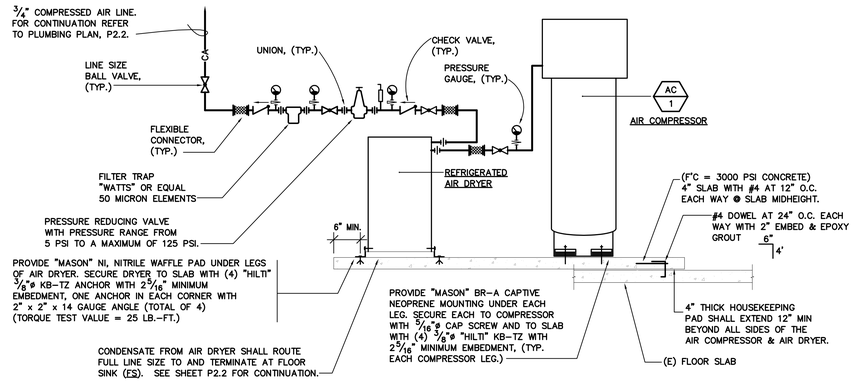

AIR COMPRESSOR DETAIL

SCALE : NONE

1 / P5.1

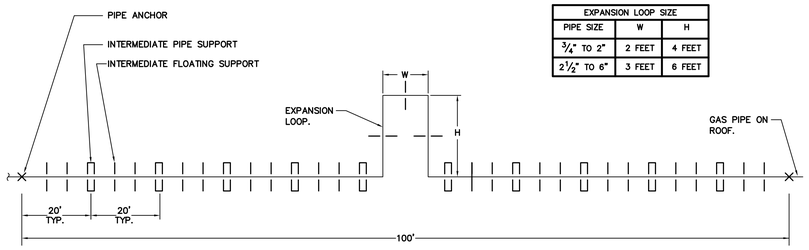

EXPANSION LOOP SIZE		
PIPE SIZE	W	H
3/4" TO 2"	2 FEET	4 FEET
2 1/2" TO 6"	3 FEET	6 FEET

NOTES:

1. INTERMEDIATE PIPE SUPPORTS SHALL BE SPACED AT 20' ON CENTER.
2. INTERMEDIATE FLOATING SUPPORTS SHALL BE SPACED BETWEEN INTERMEDIATE PIPE SUPPORTS WITH SPACING AS REQUIRED TO MEET THE MINIMUM PIPE SPACING REQUIREMENTS OF SPECIFICATION SECTION 22 00 50.
3. INTERMEDIATE SUPPORTS AND INTERMEDIATE FLOATING SUPPORTS SHALL HAVE PIPE CLAMPS INSTALLED LOOSE AROUND PIPE TO ALLOW LONGITUDINAL MOVEMENT OF THE PIPE. PIPE ANCHORS SHALL HAVE PIPE CLAMPS INSTALLED TIGHT AROUND PIPE TO PROVIDE SECURE ANCHORAGE.
4. "METRAFLEX", METRALOOP MAY ALSO BE USED IN LIEU OF THE PIPED EXPANSION LOOP.

GAS PIPE ON ROOF SUPPORT/ANCHORAGE DETAIL

SCALE : NONE

5 / P5.1

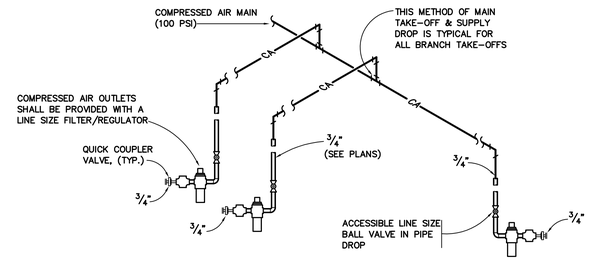

NOTES:

1. PROVIDE COMPRESSED AIR OUTLETS (AO) WITH APPURTENANCES AS SPECIFIED.

COMPRESSED AIR PIPING DETAIL

SCALE : NONE

2 / P5.1

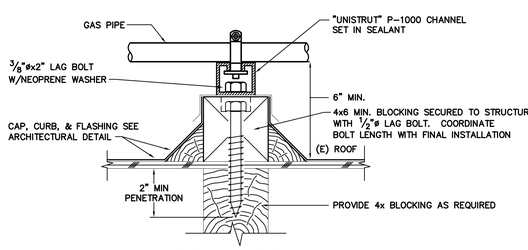

GAS PIPE ANCHOR
GREATER THAN 1" DIA.

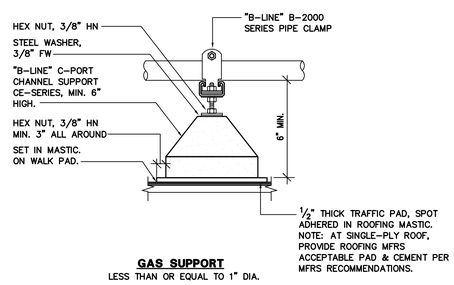

GAS SUPPORT
LESS THAN OR EQUAL TO 1" DIA.

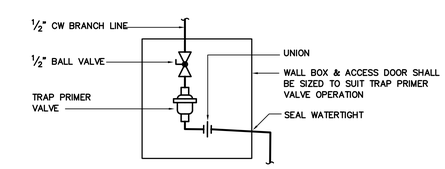

DETAIL "A"

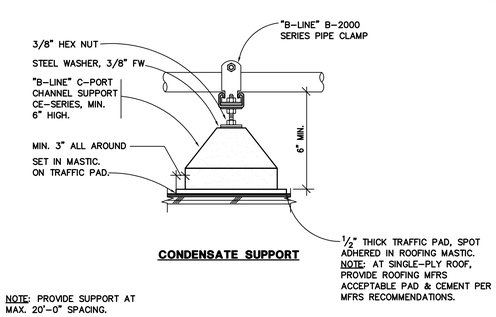

CONDENSATE SUPPORT

NOTE: PROVIDE SUPPORT AT MAX. 20'-0" SPACING.

PIPE ON ROOF MOUNTING DETAIL

SCALE : NONE

6 / P5.1

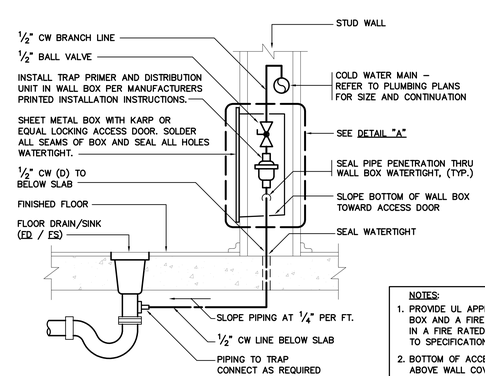

NOTES:

1. PROVIDE UL APPROVED FIRE WRAP AROUND SHEET METAL BOX AND A FIRE RATED ACCESS DOOR WHEN INSTALLED IN A FIRE RATED ASSEMBLY. FOR CONTINUATION REFER TO SPECIFICATIONS SECTION 22 00 50.
2. BOTTOM OF ACCESS DOOR SHALL BE A MINIMUM OF 6" ABOVE WALL COVING.
3. CONFIRM FINAL LOCATION OF TRAP PRIMER WITH THE PROJECT ARCHITECT AND SHOW IN ELEVATION OF FINAL COORDINATION DRAWINGS.

TRAP PRIMER TO FLOOR DRAIN

SCALE : NONE

3 / P5.1

QC
INI | %

tBP
architecture
planning
interiors

tBP/Architecture
1777 Oakland Boulevard, Suite 320
Walnut Creek, CA 94596
ph: 925.246.6418
architect

DATE SIGNED: 03/21/18

CAPITAL ENGINEERING CONSULTANTS, INC.
RANCHO CORDOVA, CALIFORNIA
TD - RCC/MJR/JCH 160781.00
PM - DESIGN TEAM PROJECT NO.
consultant

IDENTIFICATION STAMP
DIV. OF THE STATE ARCHITECT
OFFICE OF REGULATION SERVICES
APPL # 01-
FILE NO. 7-C1
AC ___ KS ___ SS ___
DATE ___

DIVISION OF THE STATE ARCHITECT
1515 CLAY STREET
OAKLAND, CA94612
ph:(510) 622-3101
agency

C-4008 APPLIED ARTS & ADMIN RENOVATION

2600 MISSION BELL DRIVE, SAN PABLO, CA 94806

CONTRA COSTA COMMUNITY COLLEGE DISTRICT
500 COURT STREET MARTINEZ, CA 94553

owner

tBP project number:	20865.00
scale: NONE	
drawn by: JCH	checked by: MJR
date: SEPTEMBER 18, 2017	

rev:	date:	description:
	8/17/2017	BID SET
	4/25/2019	RECORD DRAWINGS

THIS DRAWING AND THE DESIGNS, DEPICTIONS, IDEAS AND OTHER INFORMATION CONTAINED HEREIN CONSTITUTE UNPUBLISHED WORK OF tBP/ARCHITECTURE AND SHALL REMAIN PROPERTY OF tBP/ARCHITECTURE IN PERPETUITY. NO PART THEREOF SHALL BE REPRODUCED, DISCLOSED, DISTRIBUTED, SOLD, PUBLISHED OR OTHERWISE USED IN ANY WAY WITHOUT THE ADVANCED EXPRESS WRITTEN CONSENT OF tBP/ARCHITECTURE.

drawing title:
PLUMBING DETAILS

drawing no.:
P5.1
drawing of

Record Dwgs

\\appsrv.lan\cwork\Project_Dwgs\2016\160781.00\1500 Drawings\1203 AutoCAD Project Files\P5-1.DWG - <>dwgnpc - August 6, 2018

FIXTURE SCHEDULE

TYPE	MANUFACTURER AND CATALOG NUMBER	LAMP QUANTITY AND TYPE	WATTAGE AND VOLTAGE	DESCRIPTION	WEIGHT	MOUNTING DETAIL
A1	WILLIAMS #ATS2-24-L40/835-D-OCC-DIM-UNV	LED	42 WATTS 277 V	2X4 SURFACE MOUNT DIRECT/INDIRECT LED FIXTURE WITH INTEGRAL MOTION SENSOR	40 LBS	2/E004
A1E	WILLIAMS #ATS2-24-L40/835-D-EM/10W-OCC-DIM-UNV	LED	42 WATTS 277 V	SAME AS TYPE A1 EXCEPT WITH EMERGENCY BATTERY PACK	40 LBS	2/E004
A2	WILLIAMS #ATS2-24-L55/835-D-OCC-DIM-UNV	LED	59 WATTS 277 V	2X4 SURFACE MOUNT DIRECT/INDIRECT LED FIXTURE WITH INTEGRAL MOTION SENSOR	40 LBS	2/E004
A2E	WILLIAMS #ATS2-24-L55/835-D-EM/10W-OCC-DIM-UNV	LED	59 WATTS 277 V	SAME AS TYPE A2 EXCEPT WITH EMERGENCY BATTERY PACK	40 LBS	2/E004
A3	WILLIAMS #ATS2-24-L70/835-D-OCC-DIM-UNV	LED	70 WATTS 277 V	2X4 SURFACE MOUNT DIRECT/INDIRECT LED FIXTURE WITH INTEGRAL MOTION SENSOR	40 LBS	2/E004
A3E	WILLIAMS #ATS2-24-L70/835-D-EM/10W-OCC-DIM-UNV	LED	70 WATTS 277 V	SAME AS TYPE A3 EXCEPT WITH EMERGENCY BATTERY PACK	40 LBS	2/E004
BE	WILLIAMS #11-4-L52/835-AF12125-EM/BS/L310-UNV	LED	59 WATTS 277V	1' X 4' SURFACE MOUNT LED DIRECT, COLOR WHITE WITH ACRYLIC DIFFUSER AND EMERGENCY BATTERY PACK	30 LBS	2/E004
D	WILLIAMS #11-4-L52/835-AF12125-UNV	LED	42 WATTS 277V	1' X 4' SURFACE MOUNT LED DIRECT, COLOR WHITE WITH ACRYLIC DIFFUSER	30 LBS	2/E004
DE	WILLIAMS #11-4-L52/835-AF12125-EM/BS/L310-UNV	LED	42 WATTS 277 V	SAME AS TYPE D EXCEPT WITH EMERGENCY BATTERY PACK	30 LBS	2/E004
F	HE WILLIAMS #75L-4-LED*PH65/835-A12125-**-EDD*PH-UNV	LED	44 WATTS 277 V	4' SURFACE MOUNT LED STRIP LIGHT, DIMMABLE	30 LBS	2/E004
FE	HE WILLIAMS #75L-4-LED*PH65/835-A12125-**-EDD*PH-UNV	LED	44 WATTS 277 V	SAME AS TYPE F EXCEPT WITH EMERGENCY BATTERY PACK	30 LBS	2/E004
G	WILLIAMS #50G-S24-L60/835-S-AF12125-DIM-UNV	LED	56 WATTS 277 V	2X4 SURFACE MOUNT LED FIXTURE WITH ARYLIC PRISMATIC LENS	40 LBS	2/E004
H1	FINELITE #HP-4ID-16-B-835-TG-F-277-FA-SC-C4-OBO-OBD	LED	48 WATTS 277 V	SUSPENDED DIRECT/INDIRECT FIXTURE, DUAL CIRCUIT, DIMMING BALLAST, WITH CONTROLLED CENTER OPTICS FOR ICLS LIGHTING SYSTEM AND INTEGRAL OCCUPANCY AND DAYLIGHTING SENSORS. 4' SHOWN FOR REFERENCE - PROVIDE CONTINUOUS ROWS AS SHOWN ON PLANS	2 LBS PER FOOT	3/E004
H2	FINELITE #HP-4WW-16-B-835-TG-F-277-FA-SC-C4-OBO-OBD	LED	48 WATTS 277 V	SUSPENDED WALL WASH WHITEBOARD FIXTURE, DIMMING BALLAST, 4' SHOWN FOR REFERENCE - PROVIDE CONTINUOUS ROWS AS SHOWN ON PLANS	LBS	3/E004
J	FINELITE #HPR-LED-A-2X2-DCO-S-835-277V-SC-OBO	LED	39 WATTS 277 V	2'X2' SURFACE MOUNT DIMMABLE DOWNLIGHT WITH INTEGRAL	15 LBS	2/E004
JE	FINELITE #HPR-LED-A-2X2-DCO-S-835-277V-SC-OBO-EM	LED	39 WATTS 277 V	SAME AS TYPE J EXCEPT WITH EMERGENCY BATTERY PACK	15 LBS	2/E004
K	FINELITE # HPRLED-A-2X4-DCO-S-8-35-277V-SC-SM-OBB	LED	55 WATTS 277 V	2X4 SURFACE MOUNT LED FIXTURE, DIMMING BALLAST, WITH CONTROLS FOR ICLS LIGHTING SYSTEM AND INTEGRAL OCCUPANCY AND DAYLIGHTING SENSORS.	40 LBS	2/E004
KE	FINELITE # HPRLED-A-2X4-DCO-S-8-35-277V-SC-SM-OBB-EM	LED	55 WATTS 277 V	SAME AS TYPE K EXCEPT WITH EMERGENCY BALLAST	40 LBS	2/E004
K2	FINELITE # HPRLED-A-2X4-DCO-S-8-35-277V-SC	LED	27 WATTS 277 V	RECESSED 2X4 LED FIXTURE WITH DIMMING BALLAST	40 LBS	5/E004
K2E	FINELITE # HPRLED-A-2X4-DCO-S-8-35-277V-SC-EM	LED	27 WATTS 277 V	SAME AS TYPE K2 EXCEPT WITH EMERGENCY BALLAST	40 LBS	5/E004
L1	FINELITE # HPWLED-4'-FR-S-8-35-277V-SC-SM-OBB	LED	16 WATTS 277 V	SURFACE MOUNT 5" WIDE BY 4' LONG WALL WASH WITH DIMMING BALLAST FOR USE WITH ICLS LIGHTING SYSTEM, HARDWARE FOR MOUNTING ON TBAR CEILING	30 LBS	2/E004
L2	FINELITE # HPWLED-4'-FR-S-8-35-277V-SC-OBB	LED	16 WATTS 277 V	SAME AS TYPE L1 EXCEPT WITH MOUNTING FOR GYP BOARD CEILING	30 LBS	3/E004
L3	FINELITE # HPWLED-12'-FR-S-8-35-277V-C1-SC	LED	16 WATTS 277 V	RECESSED 5" WIDE BY 12' LONG WALL WASH WITH DIMMING BALLAST	30 LBS	5/E004
ME	HE WILLIAMS #PTS-22-L26/835-RA-EM/10W-DRV--OBB-277	LED	22 WATTS 277 V	2X2 SHALLOW SURFACE MOUNT FIXTURE WITH INTREGRAL MOTION SENSOR, DON-DIMMING, EMERGENCY BALLAST	20 LBS	2/E004
→ ⊗ →	LITHONIA LIGHTING #TLE-1-G-ELN	LED	277V	DIECAST ALUMINUM LED EXIT LIGHT WITH BRUSHED ALUMINUM HOUSING AND GREEN LETTERS, 'LL' INDICATES LOW LEVEL WHERE SHOWN ON PLANS	5 LBS	NA

GENERAL ELECTRICAL NOTES

1. ELECTRICAL CONTRACTOR IS TO PROVIDE LABOR, MATERIALS, TRANSPORTATION, EQUIPMENT, RELATED HAND TOOLS, SPECIAL AND OCCASIONAL SERVICES TO CONSTRUCT AND INSTALL THE COMPLETE ELECTRICAL SYSTEM AS SPECIFIED AND SHOWN ON THE PLANS.
2. MOUNTING HEIGHTS SHALL BE A MAXIMUM +48" TO TOP OF BOX OR MINIMUM 15" TO BOTTOM OF BOX PER CBC 1117B.6.5. ALL MOUNTING HEIGHTS SHALL BE AS SHOWN ON SYMBOL LIST UNLESS OTHERWISE NOTED ON DRAWINGS.
3. BONDING JUMPERS SHALL BE INSTALLED TO INSURE CONTINUITY WHERE CONDUIT CONNECTIONS AT CONCENTRIC KNOCKOUTS ARE TO SERVE AS A GROUND.
4. PROVIDE GREEN THWN COPPER GROUND WIRE FROM PANELBOARD GROUND BUS TO ALL BRANCH CIRCUITS.
5. THE ELECTRICIAN SHALL CHECK THE TIGHTNESS OF ALL PANELBOARD BUSES AND CIRCUIT BREAKER LUGS. COMPLETELY VACUUM AND CLEAN INTERIOR OF EQUIPMENT PRIOR TO TURN OVER TO THE OWNER.
6. ALL NEW AND EXISTING PANELBOARDS AND SWITCHBOARDS SHALL BE PROVIDED WITH NEW TYPEWRITTEN DIRECTORIES TO IDENTIFY THE LOCATION OF EACH LOAD SERVED.
7. ALL EQUIPMENT SHALL BE U.L. LISTED AND INSTALLED AS PER LISTING OR LABELING (I.E. MAX. FUSE SIZES MEAN FUSE PROTECTION REQUIRED).
8. REFER TO ARCHITECTURAL DRAWINGS FOR ACTUAL LAYOUTS OF ALL LIGHTING FIXTURES AND EQUIPMENT.
9. CONTRACTOR TO COORDINATE ALL NEW WORK WITH ALL OTHER TRADES FOR A SMOOTH FLOW OF INSTALLATION WORK.
10. ELECTRICAL CONTRACTOR SHALL BE RESPONSIBLE FOR DAMAGES TO ALL WALLS, FLOORS AND CEILINGS INCURRED DURING ELECTRICAL CONSTRUCTION. IF DAMAGE OCCURS DURING ELECTRICAL CONSTRUCTION, THE ELECTRICAL CONTRACTOR SHALL COORDINATE WITH GENERAL CONTRACTOR TO PATCH, PAINT AND REPAIR TO MATCH EXISTING CONDITIONS.
11. COORDINATE EQUIPMENT LOCATIONS AND ELECTRICAL REQUIREMENTS OF ALL EQUIPMENT REQUIRING ELECTRICAL HOOK-UP WITH CONTRACTOR RESPONSIBLE FOR PROVIDING EQUIPMENT AND EQUIPMENT MANUFACTURER DATA SHEETS.
12. COORDINATE ELECTRICAL OUTLET LOCATIONS WITH ARCHITECTURAL ELEVATIONS (I.E. CABINETRY). AVOID ALL COUNTER SUPPORTS, AND LOCATIONS BEHIND INACCESSIBLE FIXED CABINETS.
13. UPON COMPLETION OF THE INSTALLATION OF THE FIRE PROTECTIVE SIGNALING EQUIPMENT, A SATISFACTORY TEST OF THE ENTIRE SYSTEM SHALL BE MADE IN THE PRESENCE OF THE ENFORCING FIRE AGENCY.
14. ALL CORRIDOR AND EXTERIOR WALL PENETRATIONS FOR PIPES, CONDUITS, ETC., IN WALLS REQUIRING PROTECTED OPENINGS SHALL BE FIRE STOPPED. FIRE STOP MATERIAL SHALL BE A TESTED ASSEMBLY APPROVED BY THE CALIFORNIA STATE FIRE MARSHAL.
15. ELECTRICAL CONTRACTOR SHALL REVIEW MECHANICAL AND PLUMBING CONTRACT DRAWINGS AND VERIFY ALL MECHANICAL EQUIPMENT LOCATIONS, MOTOR SIZES AND CONTROL WIRING REQUIREMENTS WITH MECHANICAL CONTRACTOR AND MECHANICAL EQUIPMENT SUPPLIERS AND MANUFACTURERS PRIOR TO INSTALLATION OF ELECTRICAL CONNECTIONS.
16. RECEPTACLES SHALL NOT BE INSTALLED BACK TO BACK AND SHALL BE SPACED 24" APART. WHERE RECEPTACLES CANNOT BE SPACED 24" APART, PROVIDE 3M FIRE RATED PUTTY PADS TO MATCH WALL FIRE RATING.
17. PROVIDE AN ISOLATED GROUND WIRE IN ADDITION TO NORMAL EQUIPMENT GROUND IN ALL COMPUTER DEDICATED CIRCUITS.
18. ALL CONTROL DEVICES TO BE USED BY THE OCCUPANT OF THE ROOM OR AREA SHALL BE INSTALLED AT A MINIMUM OF 36" C/L, TO A MAXIMUM OF 48" TO TOP OF BOX FROM THE FINISHED FLOOR.
19. ELECTRICAL DRAWINGS ARE DIAGRAMMATIC AND ALTHOUGH THE SIZE AND LOCATIONS OF EQUIPMENT IS SHOWN TO SCALE WHEREVER POSSIBLE, CONTRACTOR SHALL MAKE USE OF MANUFACTURER'S OR OWNER'S DATA AVAILABLE AND/OR VERIFY DATA IN THE FIELD FOR PROVIDING AND INSTALLING CORRECT CABLE LENGTHS.
20. ALL EQUIPMENT MUST BE LISTED, LABELED, OR CERTIFIED BY A NATIONAL RECOGNIZED TESTING LABORATORY (NRTL).
21. ELECTRICAL CONTRACTOR SHALL COORDINATE WITH ALL TRADES TO KEEP ELECTRICAL ROOMS EXCLUSIVELY DEDICATED TO PANELBOARDS, SIGNAL AND OTHER ELECTRICAL EQUIPMENT. NO PLUMBING, PIPING OR MECHANICAL DUCTS SHALL RUN OVER ELECTRICAL PANEL OR OTHER ELECTRICAL EQUIPMENT PER C.E.C. 110-26(f).
22. ALL SWITCHES AND RECEPTACLES SHALL BE PROVIDED WITH 'BROTHER' LABELING SYSTEM TO IDENTIFY THE PANEL AND CIRCUIT NUMBER OF EACH OUTLET. COLOR TO BE 3/8" HIGH BLACK ON TRANSPARENT TAPE.
23. ALL CABINETS, DISCONNECT SWITCHES, PULLBOXES, AND TERMINAL BOXES SHALL BE PROVIDED WITH LABELING SYSTEM TO IDENTIFY THE PANEL AND ITS USE. SEE SPECIFICATIONS FOR REQUIREMENTS.
24. MAINTAIN "AS-BUILT" RECORDS AT ALL TIMES, SHOWING EXACT LOCATION OF ALL UNDERGROUND AND/OR CONCEALED CONDUITS AND SERVICES INSTALLED UNDER THIS CONTRACT, INCLUDING CIRCUIT IDENTIFICATION WHERE APPLICABLE. PROVIDE OWNER WITH "AS-BUILT" DOCUMENTS AS INDICATED IN THE PROJECT MANUAL.
25. DRAWINGS INDICATE THE LOCATION OF DEVICES, FIXTURES AND EQUIPMENT AND THE CIRCUIT NUMBER AND PANEL DESIGNATION WHICH SUPPLIES THEM. THE CONTRACTOR SHALL VERIFY WITH ARCHITECT/VENDORS AND COORDINATE ALL LOCATIONS PRIOR TO INSTALLATION. CONTRACTOR SHALL BE RESPONSIBLE FOR COMPLETELY CONNECTING ALL ELECTRICAL DEVICES TO CIRCUITS INDICATED ON THE DRAWINGS.
26. ALL EQUIPMENT GROUNDING SHALL CONFORM TO ARTICLE 250 OF THE NATIONAL ELECTRIC CODE, LATEST EDITION.
27. ALL EXTERIOR CONDUIT ABOVE GRADE INCLUDING ALL ROOF MOUNTED CONDUIT, SHALL BE RIGID GALVANIZED STEEL, U.O.N. COAT ALL EXPOSED THREADS WITH GALVANIZING PAINT.
28. ALL CONDUIT SHALL BE CONCEALED, UNLESS OTHERWISE NOTED.
29. ALL UNDERGROUND CONDUIT RUNS SHALL BE SEALED TO PREVENT GAS/MOISTURE ENTERING THE PIPE PER ARTICLE 230-8, 300.5 AND 300.50E.
30. PROVIDE EXPANSION FITTINGS AND/OR CONDUIT FLEX TO CONDUITS PASSING THROUGH STRUCTURAL EXPANSION JOINT SYSTEM. VERIFY/COORDINATE WITH ARCHITECT FOR LOCATION.
31. ALL SIGNAL WIRING/CABLING(TELEPHONE/INTERCOM/DATA/FIRE ALARM/CATV/INTRUSION ALARM SYSTEMS) SHALL BE NEATLY TERMINATED WITH TERMINAL BLOCKS AND LABELED WITH WIRE MARKERS AT ITS CABINETS/PANELS.
32. ALL FIXTURES WITH EMERGENCY BATTERY PACK SHALL BE PROVIDED WITH UNSWITCHED HOT.
33. ALL EXTERIOR MOUNTED GFI RECEPTACLE OUTLETS TO BE PROVIDED WITH LOCKABLE COVERS, TAYMAC MX3200.
34. FOR POWER AND LIGHTING CIRCUITS, CONTRACTOR SHALL PROVIDE SEPARATE NEUTRAL FOR EACH CIRCUIT IN THE RACEWAY OR PROVIDE BREAKER TIES TO MEET NEC CODE 210.4.
35. ALL EQUIPMENT/COMPONENTS/DEVICES INSTALLED OUTDOOR SHALL BE U.L. LISTED FOR WET LOCATION.
36. THE CONTRACTOR SHALL VERIFY WITH THE ARCHITECTURAL DRAWINGS ALL LOCATIONS AND DIMENSIONS OF DEVICES/EQUIPMENT PRIOR TO ROUGH-IN.
37. ALL EXIT SIGNS SHALL COMPLY WITH SECTIONS 1013-2 AND 1013-3 OF THE U.B.C.
38. ALL DIVISION 15 EQUIPMENT LOW VOLTAGE CONTROL WIRING SHALL BE PROVIDED AND INSTALLED BY DIVISION 15 U.O.N. PROVIDE CONDUIT WHERE REQUIRED BY DIV 15.
39. COORDINATE INSTALLATION OF ALL RECESSED LIGHT FIXTURES WITH DIVISION 15 PRIOR TO INSTALLATION OF HVAC DUCTS AND SPRINKLER HEADS. ENSURE AFTER INSTALLATION OF FIXTURES THAT THERE IS NO CONTACT BETWEEN DUCTS AND FIXTURES TO AVOID VIBRATION IN FIXTURES.
40. ALL CONDUIT STUB OUTS AND CONDUITS TERMINATING TO A J-BOX, CABINET, AND THE LIKE SHALL BE PROVIDED WITH INSULATED THROAT. BOX OR CABINET COVER SHALL BE LABELED AS TO USE.
41. MEP COMPONENT ANCHORAGE NOTES:

ALL MECHANICAL, PLUMBING, AND ELECTRICAL COMPONENTS SHALL BE ANCHORED AND INSTALLED PER THE DETAILS ON THE DSA APPROVED CONSTRUCTION DOCUMENTS. WHERE NO DETAIL IS INDICATED, THE FOLLOWING COMPONENTS SHALL BE ANCHORED OR BRACED TO MEET THE FORCE AND DISPLACEMENT REQUIREMENTS PRESCRIBED IN THE 2013 CBC, SECTIONS 1616A.1.18 THROUGH 1616A.1.26 AND ASCE 7-10 CHAPTER 13, 26 AND 30.

1. ALL PERMANENT EQUIPMENT AND COMPONENTS.
2. TEMPORARY OR MOVABLE EQUIPMENT THAT IS PERMANENTLY ATTACHED (E.G. HARD WIRED) TO THE BUILDING UTILITY SERVICES SUCH AS ELECTRICITY, GAS OR WATER.
3. MOVABLE EQUIPMENT WHICH IS STATIONED IN ONE PIECE FOR MORE THAN 8 HOURS AND HEAVIER THAN 400 POUNDS ARE REQUIRED TO BE ANCHORED WITH TEMPORARY ATTACHMENTS.

THE FOLLOWING MECHANICAL AND ELECTRICAL COMPONENTS SHALL BE POSITIVELY ATTACHED TO THE STRUCTURE, BUT THE ATTACHMENT NEED NOT BE DETAILED ON THE PLANS. THESE COMPONENTS SHALL HAVE FLEXIBLE CONNECTIONS PROVIDED BETWEEN THE COMPONENT AND ASSOCIATED DUCTWORK, PIPING AND CONDUIT.

A. COMPONENTS WEIGHING LESS THAN 400 POUNDS AND HAVE A CENTER OF MASS LOCATED 4 FEET OR LESS ABOVE THE ADJACENT FLOOR OR ROOF LEVEL THAT DIRECTLY SUPPORT THE COMPONENT.
B. COMPONENTS WEIGHING LESS THAN 20 POUNDS OR IN THE CASE OF DISTRIBUTED SYSTEMS, LESS THAN 5 POUNDS PER FOOT, WHICH ARE SUSPENDED FROM A ROOF OR FLOOR OR HUNG FROM A WALL.

FOR THOSE ELEMENTS THAT DO NOT REQUIRE DETAILS ON THE APPROVED DRAWINGS, THE INSTALLATION SHALL BE SUBJECT TO THE APPROVAL OF THE DESIGN PROFESSIONAL IN GENERAL RESPONSIBLE CHARGE OR STRUCTURAL ENGINEER DELEGATED RESPONSIBILITY AND THE DSA DISTRICT STRUCTURAL ENGINEER. THE PROJECT INSPECTOR WILL VERIFY THAT ALL COMPONENTS AND EQUIPMENT HAVE BEEN ANCHORED IN ACCORDANCE WITH ABOVE REQUIREMENTS.

PIPING, DUCTWORK, AND ELECTRICAL DISTRIBUTION SYSTEM BRACING NOTE

PIPING, DUCTWORK AND ELECTRICAL DISTRIBUTION SYSTEMS SHALL BE BRACED TO COMPLY WITH THE FORCES AND DISPLACEMENTS PRESCRIBED IN ASCE 7-10 SECTION 13.3 AS DEFINED IN ASCE 7-10 SECTION 13.6.5.6, 13.6.7, 13.6.8 AND 2013 CBC, SECTIONS 1616A.1.23, 1616A.1.24, 1616A.1.25 AND 1616A.1.26.

THE METHOD OF SHOWING BRACING AND ATTACHMENTS TO THE STRUCTURE FOR THE IDENTIFIED DISTRIBUTION SYSTEM ARE AS NOTED BELOW. WHEN BRACING AND ATTACHMENTS ARE BASED ON A PREAPPROVED INSTALLATION GUIDE (E.G. SMACNA OR OSHPD OPM), COPIES OF THE BRACING SYSTEM INSTALLATION GUIDE OR MANUAL SHALL BE AVAILABLE ON THE JOBSITE PRIOR TO THE START OF AND DURING THE HANGING AND BRACING OF THE DISTRIBUTION SYSTEMS. THE STRUCTURAL ENGINEER OF RECORD SHALL VERIFY THE ADEQUACY OF THE STRUCTURE TO SUPPORT THE HANGER AND BRACE LOADS.

MECHANICAL PIPING (MP), MECHANICAL DUCTS (MD), PLUMBING PIPING (PP), ELECTRICAL DISTRIBUTION SYSTEMS (E):

MP ☐ MD ☐ PP ☐ E ☒ – OPTION 1: DETAILED ON THE APPROVED DRAWINGS WITH PROJECT SPECIFIC NOTES AND DETAILS.

MP ☐ MD ☐ PP ☐ E ☒ – OPTION 2: SHALL COMPLY WITH THE APPLICABLE OSHPD PRE-APPROVAL (OPM #) #0043-13, 0052-13, 0063-13.

ELECTRICAL SYMBOL LIST

NOTE: DASHED SYMBOLS ON PLANS DENOTE EXISTING DEVICES

SYMBOL	DESCRIPTION
	LIGHT FIXTURE – SEE FIXTURE SCHEDULE
	EMERGENCY LIGHT FIXTURE WITH BATTERY PACK – SEE FIXTURE SCHEDULE
	WALL MOUNTED LIGHT FIXTURE – SEE FIXTURE SCHEDULE
	EXIT SIGN – WALL OR CEILING MOUNT WITH DIRECTIONAL ARROWS WHERE INDICATED SEE FIXTURE SCHEDULE
S	1PST LIGHT SWITCH +48" U.O.N.
S_3	3-WAY LIGHT SWITCH, +48" TO TOP OF BOX U.O.N.
DLM1	LIGHTING CONTROLLER, SEE DIAGRAMS
DLM2	LIGHTING CONTROLLER WITH DAYLIGHTING, SEE DIAGRAMS
D1	DIMMING SWITCH, WATTSTOPPER #LMSW-SERIES, +48" TO TOP OF BOX
M1	MULTI-SCENE SWITCH, WATTSTOPPER #LMSW-105, +48" TO TOP OF BOX
	20A, 125V, 3W GROUNDING TYPE DUPLEX RECEPTACLE, +18" U.O.N.
	20A, 125V, 4W DUPLEX RECEPTACLE, CEILING MOUNTED
	20A, 125V, 3W GROUNDING TYPE, FOURPLEX RECEPTACLE, +18" U.O.N.
	20A, 125V, 3W GROUNDING TYPE DUPLEX RECEPTACLE, MOUNTED HORIZONTALLY
	20A, 125V DUPLEX GFI RECEPTACLE, +18" U.O.N.
	20A, 125V DUPLEX GFI RECEPTACLE WITH ONE SWITCHED PLUG
	SPECIAL RECEPTACLE AS REQUIRED BY EQUIPMENT SPECIFIED
J	JUNCTION BOX, CEILING OR WALL MOUNTED – SIZED PER CODE
FACP	FIRE ALARM CONTROL PANEL (FACP) – 7165-0067:0144
RPS	FIRE ALARM REMOTE POWER SUPPLY – 7315-0785:0167
F	FIRE ALARM MANUAL PULL STATION, +48" U.O.N.
SD	FIRE ALARM SMOKE DETECTOR – 7272-0067:0203
DSD	DUCT SMOKE DETECTOR
M	FIRE ALARM HORN/STROBE, CANDELA AS NOTED – 7315-0785:0168
S	FIRE ALARM STROBE, CANDELA AS NOTED
M	ADDRESSABLE MONITOR MODULE – 7300-0067:0146
CR	ADDRESSABLE CONTROL RELAY
FSD	FIRE SMOKE DAMPER
EOL	END OF LINE RESISTOR
IGB	ISOLATED GROUND BUS
	DISCONNECT SWITCH – FUSED AS REQUIRED, WEATHERPROOF FOR OUTDOORS, SIZED PER MANUFACTURER'S REQUIREMENTS
	MOTOR CONNECTION
S^T	THERMAL OVERLOAD SWITCH
S_M	MANUAL MOTOR STARTING SWITCH, HORSE POWER RATED WITH OVERLOADS
	BRANCH CIRCUIT CONDUIT CONCEALED IN WALL OR CEILING
	BRANCH CIRCUIT CONDUIT CONCEALED UNDER FLOOR OR UNDERGROUND
	EXISTING CONDUIT
	HOMERUN TO PANELBOARD OR OTHER TERMINATION POINT
	STUB CONDUIT TO ACCESSIBLE SPACE
	CONDUIT UP
	CONDUIT DOWN

ANY BRANCH CIRCUIT CONDUIT SHALL BE MINIMUM 3/4"C – 2#12, 1#12 GREEN GROUND UNLESS OTHERWISE NOTED. FOR A GREATER NUMBER OF #12 WIRES: (—///— = 3/4"C – 3#12, 1#12G) ETC. FOR WIRE SIZES OTHER THAN #12: (—///— #8 = 3#8, 1#12G), (GROUND SIZED PER CEC, IN CODE SIZE CONDUIT) ETC.

ABBREVIATION	MEANING
(E)	EXISTING
(ER)	EXISTING TO REMAIN
(N)	NEW
AL	ALUMINUM
ANN	ANNUNCIATOR
CL	CENTERLINE
CR	CLASSROOM
CU	COPPER
FACP	FIRE ALARM CONTROL PANEL
FATC	FIRE ALARM TERMINAL CABINET
GFI	GROUND FAULT INTERRUPTER
GFP	GROUND FAULT PROTECTION
IDF	INTERMEDIATE DISTRIBUTION FRAME
IG	ISOLATED GROUND
IGB	ISOLATED GROUND BUS
MDF	MAIN DISTRIBUTION FRAME
MT	EMPTY CONDUIT WITH PULL CORD
PB	PULL BOX
RPS	REMOTE POWER SUPPLY
SAD	SEE ARCHITECTURAL DRAWINGS
STC	SIGNAL TERMINAL CABINET
TMGB	TELECOMMUNICATIONS MAIN GROUNDING BUS BAR
TTB	TELEPHONE TERMINAL BOARD
WP	WEATHERPROOF
UG	UNDERGROUND
U.O.N.	UNLESS OTHERWISE NOTED
VIF	VERIFY IN FIELD
XFMR	TRANSFORMER
A 2/32	FIXTURE TAG – LETTER DENOTES TYPE, NUMBERS INDICATE LAMP QUANTITY AND WATTAGE
1	NUMBERED ELECTRICAL NOTE
AC 1	MECHANICAL TAG – LETTER DENOTES TYPE, NUMBER DENOTES EQUIPMENT NUMBER

tBP/Architecture
1777 Oakland Boulevard, Suite 320
Walnut Creek, CA 94596
ph: 925.246.6419
architect

WHM INCORPORATED
consultant

DIVISION OF THE STATE ARCHITECT
1515 CLAY STREET
OAKLAND, CA 94612
ph:(510) 622-3101
agency

C-4008 APPLIED ARTS & ADMIN RENOVATION
2600 MISSION BELL DRIVE, SAN PABLO, CA 94806

CONTRA COSTA COMMUNITY COLLEGE DISTRICT
500 COURT STREET MARTINEZ, CA 94553
owner

tBP project number: 20865.00
file name: A111_DEMO 1ST.DWG
drawn by: DM checked by: TLK
date: APRIL 30, 2019
rev: date: description:
4/30/2019 RECORD SET

drawing title:
ELECTRICAL SYMBOLS, NOTES & SCHEDULES

drawing no.:
E001

drawing of

Record Dwgs

04/30/19 1:17:29 PM

GENERAL NOTES

1. ALL ITEMS SHOWN ARE EXISTING TO REMAIN, UNLESS OTHERWISE NOTED.

SHEET NOTES

1. EXISTING PANEL TO BE DISCONNECTED AND REMOVED.
2. EXISTING TRANSFORMER TO BE DISCONNECTED AND REMOVED.
3. EXISTING CONDUIT AND CONDUCTORS TO BE DISCONNECTED AND REMOVED.
4. EXISTING 3" CONDUIT WITH 3#500 MCM TO BE INTERCEPTED WITH NEW PULL CAN AND EXTENDED TO NEW TRANSFORMER.
5. EXISTING 400 AMP BREAKER TO BE REPLACED WITH NEW 350 AMP BREAKER.
6. NEW 3" CONDUIT WITH 3#500 KCMIL.
7. INTERCEPT EXISTING 2" CONDUIT AND 4#1/0 CONDUCTORS AND EXTEND TO NEW PANEL LOCATION.
8. NEW 1 1/4" CONDUIT WITH 4#2 AND 1#8 GROUND.
9. INTERCEPT EXISTING CONDUIT WITH NEW PULL CAN.
10. NEW (2) 3" CONDUITS WITH 4#350 KCMIL AND 1#1 GROUND EACH.

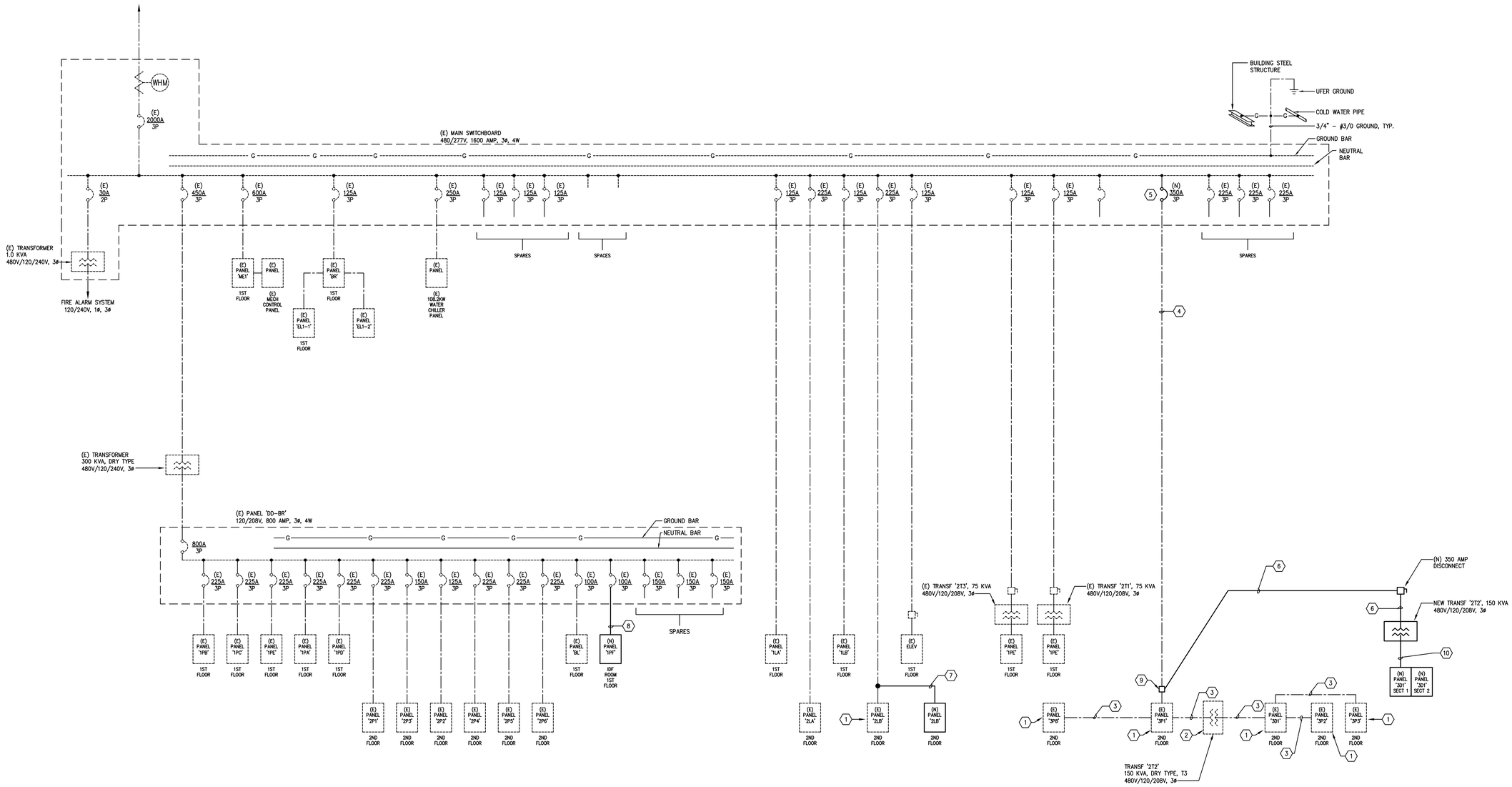

1 EXISTING ONE-LINE DIAGRAM

NOT TO SCALE

tBP Architecture planning interiors

tBP/Architecture
1777 Oakland Boulevard, Suite 320
Walnut Creek, CA 94596
ph: 925.246.6419

architect

WHM INCORPORATED
Engineering Consultants
1605 School Street
Moraga, CA 94556
tel (925)376-2302 • fax (925)376-2904
cool@whminc.com
ts-249

consultant

IDENTIFICATION STAMP
DIV. OF THE STATE ARCHITECT
OFFICE OF REGULATION SERVICES
APPL # 01-
FILE NO. 7-C1
AC ___ FLS ___ SS ___
DATE ___

DIVISION OF THE STATE ARCHITECT
1515 CLAY STREET
OAKLAND, CA94612
ph:(510) 622-3101

agency

C-4008 APPLIED ARTS & ADMIN RENOVATION

2600 MISSION BELL DRIVE, SAN PABLO, CA 94806

CONTRA COSTA COMMUNITY COLLEGE DISTRICT
500 COURT STREET MARTINEZ, CA 94553

owner

tBP project number:	20865.00
file name:	A111_DEMO 1ST.DWG
drawn by:	DM
checked by:	TLK
date:	APRIL 30, 2019

rev:	date:	description:
	4/30/2019	RECORD SET

THIS DRAWING AND THE DESIGNS, DEPICTIONS, IDEAS AND OTHER INFORMATION CONTAINED HEREIN CONSTITUTE UNPUBLISHED WORK OF tBP/ARCHITECTURE AND SHALL REMAIN PROPERTY OF tBP/ARCHITECTURE IN PERPETUITY. NO PART THEREOF SHALL BE REPRODUCED, DISCLOSED, DISTRIBUTED, SOLD, PUBLISHED OR OTHERWISE USED IN ANY WAY WITHOUT THE ADVANCED EXPRESS WRITTEN CONSENT OF tBP/ARCHITECTURE.

drawing title:

ELECTRICAL ONE LINE DIAGRAM

drawing no.:

E002

drawing of

04/30/19 1:17:31 PM F:\2016\16-069 CCC ARTS-ADMIN\RECORD SET\160686E002.DWG

Record Dwgs

PANEL NOTES

1. PROVIDE RED LOCKOUT ON BREAKER.
2. EXISTING CIRCUIT TO BE DISCONNECTED.
3. REPLACE EXISTING BREAKER(S) WITH NEW.
4. DISCONNECT EXISTING CIRCUIT AND RE-USE FOR NEW WORK.
5. CONNECT NEW CIRCUIT TO EXISTING SPARE

EXISTING PANEL 1LA

DESCRIPTION	LOAD (KVA)									LOAD (KVA)				DESCRIPTION
	LTG.	REC.	RES.	MOT.	CB	CKT	SN	CKT	CB	LTG.	REC.	RES.	MOT.	
LTG - OFFICES					20/1	1	*	2	20/1					LTG - HALLS
LTG - APPLIANCE LAB - 115, 116, 117					20/1	3	*	4	20/1					LTG - APPLIANCE LAB
LTG - APPLIANCE LAB					20/1	5	*	6	20/1					LTG - APPLIANCE LAB
LTG - ENVIRONMENTAL - 110					20/1	7	*	8	20/1					LTG - BATHROOMS - 125, 122, 123
LTG - ENVIRONMENTAL - 110					20/1	9	*	10	20/1					LTG - ENTRY - 118, 119
LTG - RMS 103, 104, 105, 106, 107, 109					20/1	11	*	12	20/1					LTG - ENGINEERING - 102
LTG - ENGINEERING					20/1	13	*	14	20/1					LTG - ENGINEERING
LTG - ENGINEERING					20/1	15	*	16	20/1					SPARE
SPARE					20/1	17	*	18	20/1					SPARE
SPARE					20/1	19	*	20	20/1					SPARE
SPARE					20/1	21	*	22	20/1					SPARE
TOTAL														

VOLTS: 277/480V,3ø,4W — MTG: SURFACE
BUS: 125 AMP — TYPE: (E) — CONNECTED KVA:
MAIN: 125 AMP — KAIC: (E) — CONNECTED AMPS:

REVISED PANEL 1LA

DESCRIPTION	LOAD (KVA)									LOAD (KVA)				DESCRIPTION
	LTG.	REC.	RES.	MOT.	CB	CKT	SN	CKT	CB	LTG.	REC.	RES.	MOT.	
LTG - OFFICES	1.00				20/1	1	*	2	20/1	2.00				LTG - HALLS
LTG - 117C, 117E	1.00				20/1	3	*	4	20/1					SPARE
LTG - 117	2.00				20/1	5	*	6	20/1					SPARE
LTG - ENVIRONMENTAL - 110	1.20				20/1	7	*	8	20/1	1.20				LTG - BATHROOMS - 125, 122, 123
LTG - ENVIRONMENTAL - 110	1.20				20/1	9	*	10	20/1	1.00				LTG - ENTRY - 118, 119
LTG - RMS 103, 104, 105, 106, 107, 109	1.80				20/1	11	*	12	20/1	1.00				LTG - ENGINEERING - 102
LTG - ENGINEERING	1.00				20/1	13	*	14	20/1	1.00				LTG - ENGINEERING
LTG - ENGINEERING	1.00				20/1	15	*	16	20/1					SPARE
SPARE					20/1	17	*	18	20/1					SPARE
SPARE					20/1	19	*	20	20/1					SPARE
SPARE					20/1	21	*	22	20/1					SPARE
TOTAL	10.20									6.20				

VOLTS: 277/480V,3ø,4W — MTG: SURFACE
BUS: 125 AMP — TYPE: (E) — CONNECTED KVA: 16.40
MAIN: 125 AMP — KAIC: (E) — CONNECTED AMPS: 19.74

EXISTING PANEL 1PA

STORAGE 117F

DESCRIPTION	LOAD (KVA)									LOAD (KVA)				DESCRIPTION
	LTG.	REC.	RES.	MOT.	CB	CKT	SN	CKT	CB	LTG.	REC.	RES.	MOT.	
RECEPTACLES					20/1	1	*	2	20/1					LIGHTS
RECEPTACLES					20/1	3	*	4	20/1					LIGHTS
FATC B1					20/1	5	*	6	20/1					LIGHTS
RECEPTACLES					20/1	7	*	8	20/1					LIGHTS
RECEPTACLES					20/1	9	*	10	20/1					LIGHTS
RECEPTACLES					20/1	11	*	12	20/1					WALL PLUGS UNDER SIMULATORS
RECEPTACLES					20/1	13	*	14	20/1					AUTO TECH SIMULATOR
RECEPTACLES					20/1	15	*	16	20/1					EXT PLUGS - SOUTH WALL
RECEPTACLES					20/1	17	*	18	20/1					LIGHTS
LIGHTS					20/1	19	*	20	20/1					LIGHTS
LIGHTS					20/1	21	*	22	20/1					LIGHTS
LIGHTS					20/1	23	*	24	20/1					LIGHTS
RECEPTACLES					20/1	25	*	26	20/1					W RECEPTACLE
RECEPTACLES					20/1	27	*	28	20/1					WALL PLUGS
PLUGS - 113, 114, 117 EMER LTS					20/1	29	*	30	20/1					STUDIO EMER LIGHT
RECEPTS - 111					20/1	31	*	32	20/1					LIGHTS
RECEPTS - 111					20/1	33	*	34	20/1					LIGHTS
RECEPTS - PAINT ROOM					20/1	35	*	36	20/1					LIGHTS
SPARE					20/1	37	*	38	20/1					LIGHTS
RECEPTS					20/1	39	*	40	20/1					LIGHTS
COMP ROOM LTS AND PLUGS					20/1	41	*	42	20/1					LIGHTS
TOTAL														

VOLTS: 120/208V,3ø,4W — MTG: SURFACE
BUS: 225 AMP — TYPE: (E) — CONNECTED KVA:
MAIN: 225 AMP — KAIC: (E) — CONNECTED AMPS:

REVISED PANEL 1PA

STORAGE 117F

DESCRIPTION	LOAD (KVA)									LOAD (KVA)				DESCRIPTION
	LTG.	REC.	RES.	MOT.	CB	CKT	SN	CKT	CB	LTG.	REC.	RES.	MOT.	
RECEPTACLES		0.90			20/1	1	*	2	20/1		0.54			RECEPTS - OPEN OFFICE
RECEPTACLES		0.90			20/1	3	*	4	20/1		0.54			RECEPTS - OPEN OFFICE
FATC B1		0.50			20/1	5	*	6	20/1		0.54			RECEPTS - OPEN OFFICE
RECEPTACLES		1.00			20/1	7	*	8	20/1		0.54			RECEPTS - STORAGE
RECEPTACLES		1.00			20/1	9	*	10	20/1		0.54			RECEPTS - STORAGE
RECEPTACLES		1.00			20/1	11	*	12	20/1		0.54			RECEPTS - STORAGE
RECEPTACLES		1.00			20/1	13	*	14	20/1		0.30			EF-112D
RECEPTACLES		1.00			20/1	15	*	16	20/2				0.20	SAC - 117G
RECEPTACLES		1.00			20/1	17	*	18						
LIGHTS		1.00			20/1	19	*	20	20/1		0.72			RECEPTS - 117A
LIGHTS		1.00			20/1	21	*	22	20/1					FSD 117D
LIGHTS		1.00			20/1	23	*	24	20/1					SPARE
RECEPTACLES		1.00			20/1	25	*	26	20/1		0.90			W RECEPTACLE
RECEPTACLES		1.00			20/1	27	*	28	20/1		0.90			WALL PLUGS
PLUGS - 113, 114, 117 EMER LTS		1.00			20/1	29	*	30	20/1	0.50				STUDIO EMER LIGHT
RECEPTS - 111		1.00			20/1	31	*	32	20/1	1.00				LIGHTS
RECEPTS - 111		1.00			20/1	33	*	34	20/1	1.00				LIGHTS
RECEPTS - PAINT ROOM		1.00			20/1	35	*	36	20/1	1.00				LIGHTS
SPARE					20/1	37	*	38	20/1	1.00				LIGHTS
RECEPTS					20/1	39	*	40	20/1	1.00				LIGHTS
COMP ROOM LTS AND PLUGS		1.00			20/1	41	*	42	20/1	1.00				LIGHTS
TOTAL		18.30								6.50	6.06		0.20	

VOLTS: 120/208V,3ø,4W — MTG: RECESSED
BUS: 225 AMP — TYPE: (E) — CONNECTED KVA: 31.06
MAIN: 225 AMP — KAIC: (E) — CONNECTED AMPS: 86.28

NEW PANEL 1PF

DESCRIPTION	LOAD (KVA)									LOAD (KVA)				DESCRIPTION
	LTG.	REC.	RES.	MOT.	CB	CKT	SN	CKT	CB	LTG.	REC.	RES.	MOT.	
IDF RACK		0.54			20/1	1	*	2	20/1		0.54			RECEPTS - IDF
IDF RACK		0.54			20/1	3	*	4	20/1		0.54			RECEPTS - IDF
SPARE					20/1	5	*	6	20/1		0.54			RECEPTS - IDF
SPARE					20/1	7	*	8	20/1		0.54			RECEPTS - IDF
SPARE					20/1	9	*	10	20/1					SPARE
SPARE					20/1	11	*	12	20/1					SPARE
SPARE					20/1	13	*	14	20/1					SPARE
SPARE					20/1	15	*	16	20/1					SPARE
SPARE					20/1	17	*	18	20/1					SPARE
SPARE					20/1	19	*	20	20/1					SPARE
SPARE					20/1	21	*	22	20/1					SPARE
SPARE					20/1	23	*	24	20/1					SPARE
SPARE					20/1	25	*	26	20/1					SPARE
IDF RACK		1.20			30/2	27	*	28	30/2		1.20			IDF RACK
						29	*	30						
TOTAL		2.28									3.36			

VOLTS: 120/208V,3ø,4W — MTG: SURFACE
BUS: 100A — TYPE: NQOD — CONNECTED KVA: 5.64
MAIN: 100A MB — KAIC: 10 — CONNECTED AMPS: 15.67

EXISTING PANEL 1PFA

HALLWAY 148

DESCRIPTION	LOAD (KVA)									LOAD (KVA)				DESCRIPTION
	LTG.	REC.	RES.	MOT.	CB	CKT	SN	CKT	CB	LTG.	REC.	RES.	MOT.	
(E) RECEPTS - ROOM 133					20/1	1	*	2	20/1					(E) RECEPTS - ROOM 145
(E) RECEPTS - ROOM 133					20/1	3	*	4	20/1					(E) RECEPTS - ROOM 145
(E) RECEPTS - ROOM 135					20/1	5	*	6	20/1					(E) RECEPTS - ROOM 143
(E) RECEPTS - ROOM 135					20/1	7	*	8	20/1					(E) RECEPTS - ROOM 143
(E) RECEPTS - ROOM 131					20/1	9	*	10	20/1					(E) IDF UPS
(E) RECEPTS - ROOM 131					20/1	11	*	12	20/1					(E) IDF PDU
(E) RECEPTS - ROOM 131					20/1	13	*	14	20/1					(E) FROM 1PF-14
(E) RECEPTS - ROOM 131					20/1	15	*	16	20/1					(E) FROM 1PF-16
(N) RECEPTS - ROOM 140		0.54			20/1	17	*	18	20/1					(E) FROM 1PF-18
(N) RECEPTS - ROOM 140		0.72			20/1	19	*	20	20/1		1.00			(N) TEACHERS RECEPTS - RM 137/140
(N) RECEPTS - ROOM 137		0.54			20/1	21	*	22	20/1		1.00			(N) PROJECTORS - RM 140
(N) RECEPTS - ROOM 137		0.54			20/1	23	*	24	20/1		0.50			(N) PROJECTORS - RM 137
(E) SPARE					20/1	25	*	26	20/1		1.00			(N) KEYCARD AND DOOR ASSIST
(E) SPARE					20/1	27	*	28	20/1					(E) SPARE
(E) FA BOOSTER					20/1	29	*	30	20/1					(E) FA SMOKE DAMPER
TOTAL		2.34									3.50			

VOLTS: 120/208V,3ø,4W — MTG: RECESSED
BUS: 100A — TYPE: SQUARE D NQ — CONNECTED KVA: 5.84
MAIN: 100A MB — KAIC: 10 — CONNECTED AMPS: 16.22

EXISTING PANEL 2LB

DESCRIPTION	LOAD (KVA)									LOAD (KVA)				DESCRIPTION
	LTG.	REC.	RES.	MOT.	CB	CKT	SN	CKT	CB	LTG.	REC.	RES.	MOT.	
LTG					20/1	1	*	2	20/1					LTG
LTG					20/1	3	*	4	20/1					LTG
LTG					20/1	5	*	6	20/1					LTG
LTG - HALLS					20/1	7	*	8	20/1					LTG - KITCHEN
LTG - HALLS					20/1	9	*	10	20/1					LTG - KITCHEN
LTG - HALLS					20/1	11	*	12	20/1					LTG
LTG					20/1	13	*	14	20/1					LTG
LTG					20/1	15	*	16	20/1					LTG
SPARE					20/1	17	*	18	20/1					LTG
SPARE					20/1	19	*	20	20/1					SPARE
SPARE					20/1	21	*	22	20/1					SPARE
SPARE					20/1	23	*	24	20/1					SPARE
TOTAL														

VOLTS: 277/480V,3ø,4W — MTG: SURFACE
BUS: 225 AMP — TYPE: (E) — CONNECTED KVA:
MAIN: 225 AMP — KAIC: (E) — CONNECTED AMPS:

NEW PANEL 2LB

DESCRIPTION	LOAD (KVA)									LOAD (KVA)				DESCRIPTION
	LTG.	REC.	RES.	MOT.	CB	CKT	SN	CKT	CB	LTG.	REC.	RES.	MOT.	
LTG					20/1	1	*	2	20/1					LTG
LTG					20/1	3	*	4	20/1					LTG
LTG					20/1	5	*	6	20/1					LTG
LTG - HALLS					20/1	7	*	8	20/1					LTG - KITCHEN
LTG - HALLS					20/1	9	*	10	20/1					LTG - KITCHEN
LTG - HALLS					20/1	11	*	12	20/1					LTG
LTG					20/1	13	*	14	20/1					LTG
LTG					20/1	15	*	16	20/1					LTG
SPARE					20/1	17	*	18	20/1					LTG
SPARE					20/1	19	*	20	20/1					SPARE
SPARE					20/1	21	*	22	20/1					SPARE
SPARE					20/1	23	*	24	20/1					SPARE
					20/1	25	*	26	20/1					
					20/1	27	*	28	20/1					
TOTAL														

VOLTS: 277/480V,3ø,4W — MTG: RECESSED
BUS: 225 AMP — TYPE: NQOD — CONNECTED KVA:
MAIN: 225 AMP — KAIC: 10 — CONNECTED AMPS:

EXISTING PANEL 2P4

ROOM 213

DESCRIPTION	LOAD (KVA)									LOAD (KVA)				DESCRIPTION
	LTG.	REC.	RES.	MOT.	CB	CKT	SN	CKT	CB	LTG.	REC.	RES.	MOT.	
RECEPTACLES					20/1	1	*	2	20/1					RECEPTACLES
RECEPTACLES					20/1	3	*	4	20/1					RECEPTACLES - COPY MACHINE
RECEPTACLES					20/1	5	*	6	20/1					RECEPTACLES
RECEPTACLES					20/1	7	*	8	20/1					RECEPTACLES
RECEPTACLES					20/1	9	*	10	20/1					RECEPTACLES
RECEPTACLES					20/1	11	*	12	20/1					RECEPTACLES
UNDERFLOOR DUCT					20/1	13	*	14	20/1					UNDERFLOOR DUCT
UNDERFLOOR DUCT					20/1	15	*	16	20/1					UNDERFLOOR DUCT
UNDERFLOOR DUCT					20/1	17	*	18	20/1					MASTER CLOCK
UNDERFLOOR DUCT					20/1	19	*	20	20/1					UNDERFLOOR DUCT
UNDERFLOOR DUCT					20/1	21	*	22	20/1					UNDERFLOOR DUCT
UNDERFLOOR DUCT - #201 DIR OFFICE					20/1	23	*	24	20/1					UNDERFLOOR DUCT
SWITCH					20/1	25	*	26	20/1					UNDERFLOOR DUCT
RECEPTACLES					20/1	27	*	28	20/1					UNDERFLOOR DUCT
TELEPHONE PANEL					20/1	29	*	30	20/1					RECEPT - RM 205 SMART RM EQUIP
RECEPTACLES					20/1	31	*	32	20/1					PAYROLL MICROWAVE/FRIDGE
RECEPTACLES					20/1	33	*	34	20/1					PAYROLL COPIER
RECEPTACLES					20/1	35	*	36	20/1					UNDERFLOOR DUCT
RECEPTACLES					20/1	37	*	38	20/1					SPARE
RECEPTACLES					20/1	39	*	40	30/2					RECEPT
SPARE					20/1	41	*	42						
TOTAL														

VOLTS: 120/208V,3ø,4W — MTG: RECESSED
BUS: 225 AMP — TYPE: ITE — CONNECTED KVA:
MAIN: 225 AMP MLO — KAIC: (E) — CONNECTED AMPS:

REVISED PANEL 2P4

ROOM 213

DESCRIPTION	LOAD (KVA)									LOAD (KVA)				DESCRIPTION
	LTG.	REC.	RES.	MOT.	CB	CKT	SN	CKT	CB	LTG.	REC.	RES.	MOT.	
RECEPTS - OFFICE 204		0.54			20/1	1	*	2	20/1		0.90			RECEPTS - MATH LAB
RECEPTS - OFFICE 204		0.54			20/1	3	*	4	20/1		0.90			RECEPTS - MATH LAB
RECEPTS - PROJECTORS 202/203		1.00			20/1	5	*	6	20/1		0.90			RECEPTACLES
RECEPTACLES		0.90			20/1	7	*	8	20/1		0.90			RECEPTACLES
RECEPTS - MATH LAB		0.72			20/1	9	*	10	20/1		0.90			RECEPTACLES
RECEPTACLES		0.90			20/1	11	*	12	20/1		0.90			RECEPTACLES
UNDERFLOOR DUCT		0.90			20/1	13	*	14	20/1		0.90			RECEPTS - MATH LAB
UNDERFLOOR DUCT		0.90			20/1	15	*	16	20/1		0.90			RECEPTS - MATH LAB
UNDERFLOOR DUCT		0.90			20/1	17	*	18	20/1		0.50			MASTER CLOCK
RECEPTS - MATH LAB		0.72			20/1	19	*	20	20/1		0.72			UNDERFLOOR DUCT
RECEPTS - MATH LAB		0.72			20/1	21	*	22	20/1		0.72			UNDERFLOOR DUCT
RECEPTS - MATH LAB		0.72			20/1	23	*	24	20/1		0.90			RECEPTS - MATH LAB
SWITCH		0.50			20/1	25	*	26	20/1		0.90			RECEPTS - MATH LAB
RECEPTACLES		0.90			20/1	27	*	28	20/1		0.90			RECEPTS - MATH LAB
TELEPHONE PANEL		1.00			20/1	29	*	30	20/1		1.00			RECEPT - RM 205 SMART RM EQUIP
RECEPTACLES		0.90			20/1	31	*	32	20/1		1.20			PAYROLL MICROWAVE/FRIDGE
RECEPTACLES		0.90			20/1	33	*	34	20/1		1.20			PAYROLL COPIER
RECEPTACLES		0.90			20/1	35	*	36	20/1		0.90			UNDERFLOOR DUCT
RECEPTACLES		0.90			20/1	37	*	38	20/1		0.72			RECEPTS - MATH LAB
RECEPTACLES		0.90			20/1	39	*	40	30/2		1.50			RECEPT
SPARE					20/1	41	*	42						
TOTAL		16.36									18.36			

VOLTS: 120/208V,3ø,4W — MTG: RECESSED
BUS: 225 AMP — TYPE: ITE — CONNECTED KVA: 34.72
MAIN: 225 AMP MLO — KAIC: (E) — CONNECTED AMPS: 96.44

EXISTING PANEL 2P5

DESCRIPTION	LOAD (KVA)									LOAD (KVA)				DESCRIPTION
	LTG.	REC.	RES.	MOT.	CB	CKT	SN	CKT	CB	LTG.	REC.	RES.	MOT.	
RECEPTS					20/1	1	*	2	20/1					REC - DA-B, DA-C
RECEPTS					20/1	3	*	4	20/1					REC - DA-C, DA-D, DENTAL OPER FLUOR
RECEPTS					20/1	5	*	6	20/1					REC - DA-D, DA-E DENTAL OPER FLUOR
REC - DA-14A					20/1	7	*	8	20/1					REC - DA-A
REC - DA-14B					20/1	9	*	10	20/1					REC - DA-B
REC - DA-C					20/1	11	*	12	20/1					REC - DA-C - TABLE X-RAY VIEWERS
REC - DA-14C					20/1	13	*	14	20/1					REC - DA-6A
REC - DA-6A					20/1	15	*	16	20/1					REC - DA-6A
REC - DA-6A-TABLE X-RAY VIEWERS					20/1	17	*	18	20/1					REC - DA-6A - TABLE X-RAY VIEWERS
REC - DA-6A					20/1	19	*	20	20/1					REC - EXAM ROOMS
REC - DA-6A					20/1	21	*	22	20/1					REC - EXAM ROOMS
REC - DA-6A					20/1	23	*	24	20/1					REC - EXAM ROOMS
REC - DA-24,DA-25					20/1	25	*	26	20/1					REC - EXAM ROOMS
REC - STORAGE 205					20/1	27	*	28	20/1					INVEST FURNACE DA-7
REC - DA-4					20/1	29	*	30	20/1					CENT VACUUM - DA-11
REC - DA-5A, TRIMMERS					20/1	31	*	32	20/1					LTG - DENTAL LT TRACK
REC - DA-5B					20/1	33	*	34	20/1					LTG - DENTAL LT TRACK
SPARE					20/1	35	*	36	20/1					LTG - DENTAL LT TRACK
SPARE					20/1	37	*	38	20/1					SPARE
X-RAY CONTROL					20/1	39	*	40	20/1					SPARE
X-RAY CONTROL UNIT					20/1	41	*	42	20/1					SPARE
TOTAL														

VOLTS: 120/208V,3ø,4W — MTG: SURFACE
BUS: 225 AMP — TYPE: (E) — CONNECTED KVA:
MAIN: 225 AMP — KAIC: (E) — CONNECTED AMPS:

REVISED PANEL 2P5

DESCRIPTION	LOAD (KVA)									LOAD (KVA)				DESCRIPTION
	LTG.	REC.	RES.	MOT.	CB	CKT	SN	CKT	CB	LTG.	REC.	RES.	MOT.	
(E) RECEPTS					20/1	1	*	2	20/1		0.72			RECEPTS - RM 212B
(E) RECEPTS					20/1	3	*	4	20/1		0.72			RECEPTS - RM 212B
(E) RECEPTS					20/1	5	*	6	20/1		0.72			RECEPTS - RM 212B
RECEPTS - EXAM LABS		0.36			20/1	7	*	8	20/1		0.72			RECEPTS - RM 212B
RECEPTS - EXAM LABS		0.36			20/1	9	*	10	20/1		0.72			RECEPTS - RM 212B
RECEPTS - EXAM LABS		0.36			20/1	11	*	12	20/1		0.72			RECEPTS - RM 212B
RECEPTS - EXAM LABS		0.36			20/1	13	*	14	20/1		0.72			RECEPTS - RM 212
RECEPTS - EXAM LABS		0.36			20/1	15	*	16	20/1		0.72			RECEPTS - RM 212
RECEPTS - EXAM LABS		0.36			20/1	17	*	18	20/1		0.72			RECEPTS - RM 212
RECEPTS - EXAM LABS		0.36			20/1	19	*	20	20/1		0.27			RECEPTS - RM 212
RECEPTS - EXAM LABS		0.36			20/1	21	*	22	20/1		0.72			RECEPTS - RM 206A
SPARE					20/1	23	*	24	20/1		0.72			RECEPTS - 212 PROJECTOR
SPARE					20/1	25	*	26	20/1		0.72			RECEPTS - 212 TEACHER
SPARE					20/1	27	*	28	20/1					SPARE
SPARE					20/1	29	*	30	20/1					SPARE
SPARE					20/1	31	*	32	20/1	1.00				(E) LTG - DENTAL LT TRACK
SPARE					20/1	33	*	34	20/1	1.00				(E) LTG - DENTAL LT TRACK
SAC117G SCU				1.00	20/2	35	*	36	20/1	1.00				(E) LTG - DENTAL LT TRACK
						37	*	38	20/1					ELEVATOR CAB LIGHTS
SAC 230 SCU				1.00	20/2	39	*	40	20/1					RESTROOM OUTLETS/FLUSH SENSORS
						41	*	42	20/1					SPARE
TOTAL		2.88		2.00						3.00	8.91			

VOLTS: 120/208V,3ø,4W — MTG: SURFACE
BUS: 225 AMP — TYPE: (E) — CONNECTED KVA: 16.79
MAIN: 225 AMP — KAIC: (E) — CONNECTED AMPS: 46.64

EXISTING PANEL 2P6

DESCRIPTION	LOAD (KVA)									LOAD (KVA)				DESCRIPTION
	LTG.	REC.	RES.	MOT.	CB	CKT	SN	CKT	CB	LTG.	REC.	RES.	MOT.	
REC - RMS 257, 255, 256					20/1	1	*	2	20/1					REC - RMS 245, 246, 247
REC - RMS 257, 255, 256					20/1	3	*	4	20/1					RECEPTACLES
REC - TELEPHONE ROOM					20/1	5	*	6	20/1					REC - RMS 216
RECEPTACLES					20/1	7	*	8	20/1					REC - RM 240 DENTAL
RECEPTACLES					20/1	9	*	10	20/1					REC - DA-22, RM 243 DENTAL
RECEPTACLES					20/1	11	*	12	20/1					REC - DA-10, RM 244 DENTAL
REC - SPARE TO DENTAL LAB					20/1	13	*	14	20/1					REC - RMS 250, 251, 252
RECEPTACLES					20/1	15	*	16	20/1					REC - RMS 250, 251, 252
RECEPTACLES					20/1	17	*	18	20/1					RECEPTACLES
RECEPTACLES					20/1	19	*	20	20/1					RECEPTACLES
RECEPTACLES					20/1	21	*	22	20/1					RECEPTACLES
RECEPTACLES					20/1	23	*	24	20/1					RECEPTACLES
rec - da-19					20/1	25	*	26	20/1					REC - DA-6B
RECEPTACLES					20/1	27	*	28	20/1					REC - DA-21
REC - DA-20A, DENTAL VIDEO PLUGS					20/1	29	*	30	20/1					RECEPTACLES
REC - DA-9B					20/1	31	*	32	20/1					RECETPACLES
ROOF PLUGS					20/1	33	*	34	20/2					SPARE
WOMENS RR AUTO DOOR OPENER					20/1	35	*	36						
TRAC LTG - TV STUDIO					20/1	37	*	38	20/1					SPARE
TRAC LTG - TV STUDIO					20/1	39	*	40	20/1					SPARE
SPARE					20/1	41	*	42	20/1					SPARE
TOTAL														

VOLTS: 120/208V,3ø,4W — MTG: SURFACE
BUS: 225 AMP — TYPE: (E) — CONNECTED KVA:
MAIN: 225 AMP — KAIC: (E) — CONNECTED AMPS:

REVISED PANEL 2P6

DESCRIPTION	LOAD (KVA)									LOAD (KVA)				DESCRIPTION
	LTG.	REC.	RES.	MOT.	CB	CKT	SN	CKT	CB	LTG.	REC.	RES.	MOT.	
REC - RMS 257, 255, 256		0.72			20/1	1	*	2	20/1		0.90			REC - RMS 245, 246, 247
REC - RMS 257, 255, 256		0.72			20/1	3	*	4	20/1		0.90			RECEPTACLES
REC - TELEPHONE ROOM		0.50			20/1	5	*	6	20/1		0.90			REC - RMS 216
RECEPTACLES		0.90			20/1	7	*	8	20/1		0.90			REC - RM 240 DENTAL
RECEPTACLES		0.90			20/1	9	*	10	20/1		0.90			REC - DA-22, RM 243 DENTAL
RECEPTACLES		0.90			20/1	11	*	12	20/1		0.90			REC - DA-10, RM 244 DENTAL
REC - SPARE TO DENTAL LAB		0.90			20/1	13	*	14	20/1		0.90			REC - RMS 250, 251, 252
RECEPTACLES		0.90			20/1	15	*	16	20/1		0.90			REC - RMS 250, 251, 252
RECEPTACLES		0.90			20/1	17	*	18	20/1		0.90			RECEPTACLES
RECEPTACLES		0.90			20/1	19	*	20	20/1					SPARE
SPARE					20/1	21	*	22	20/1					SPARE
SPARE					20/1	23	*	24	20/1		0.72			IDF 230
SPARE					20/1	25	*	26	30/2		1.50			IDF 230
RECEPTACLES		0.90			20/1	27	*	28						
SPARE					20/1	29	*	30	30/2		1.50			IDF 230
SPARE					20/1	31	*	32						
ROOF PLUGS		0.90			20/1	33	*	34	20/2					SPARE
WOMENS RR AUTO DOOR OPENER		0.90			20/1	35	*	36						
TRAC LTG - TV STUDIO	1.00				20/1	37	*	38	20/1					SPARE
TRAC LTG - TV STUDIO	1.00				20/1	39	*	40	20/1					SPARE
SPARE					20/1	41	*	42	20/1					SPARE
TOTAL	2.00	10.94									11.82			

VOLTS: 120/208V,3ø,4W — MTG: SURFACE
BUS: 225 AMP — TYPE: (E) — CONNECTED KVA: 24.76
MAIN: 225 AMP — KAIC: (E) — CONNECTED AMPS: 68.78

NEW PANEL 3D1 - SECTION 1

DESCRIPTION	LOAD (KVA)									LOAD (KVA)				DESCRIPTION
	LTG.	REC.	RES.	MOT.	CB	CKT	SN	CKT	CB	LTG.	REC.	RES.	MOT.	
RECEPTS - OFC 237B		0.72			20/1	1	*	2	20/1		0.50			HEADWALL
RECEPTS - OFC 237B		0.72			20/1	3	*	4	20/1		0.50			HEADWALL
RECEPTS - OFC 237B		0.72			20/1	5	*	6	20/1		1.00			BED LOCATOR
RECEPTS - COPIER		1.10			20/1	7	*	8	20/1		1.00			BED LOCATOR
RECEPTS - OFC 237D		0.72			20/1	9	*	10	20/1		1.00			BED LOCATOR
RECEPTS - OFC 237C		0.72			20/1	11	*	12	20/1		1.00			BED LOCATOR
RECEPTS - CONTROL ROOM		0.72			20/1	13	*	14	20/1		1.00			BED LOCATOR
RECEPTS - CONTROL ROOM		0.72			20/1	15	*	16	20/1		1.00			BED LOCATOR
RECEPTS - SIM LAB		0.72			20/1	17	*	18	20/1		1.00			BED LOCATOR
RECEPTS - SIM LAB		0.72			20/1	19	*	20	20/1		1.00			BED LOCATOR
RECEPTS - CR 239D		0.54			20/1	21	*	22	20/1		1.00			BED LOCATOR
RECEPTS - CR 239D		0.54			20/1	23	*	24	20/1		1.00			BED LOCATOR
RECEPTS - CR 239D PROJECTOR		1.00			20/1	25	*	26	20/1		1.00			BED LOCATOR
RECEPTS - CR 239D MECHOSHADE		0.54			20/1	27	*	28	20/1		1.00			BED LOCATOR
RECEPTS - SKILLS LAB		1.00			20/1	29	*	30	20/1		1.00			RECEPTS - SKILLS LAB
RECEPTS - SKILLS LAB		1.00			20/1	31	*	32	20/1		1.00			RECEPTS - SKILLS LAB
RECEPTS - SKILLS LAB		1.00			20/1	33	*	34	20/1		1.00			RECEPTS - SKILLS LAB
RECEPTS - SKILLS LAB		1.00			20/1	35	*	36	20/1		1.00			RECEPTS - SKILLS LAB
RECEPTS - SKILLS LAB		1.00			20/1	37	*	38	20/1		1.00			RECEPTS - SKILLS LAB
SPARE					20/1	39	*	40	20/1					SPARE
SPARE					20/1	41	*	42	20/1					SPARE
TOTAL		15.20									18.00			

VOLTS: 120/208V,3ø,4W — MTG: SURFACE
BUS: 600 AMP — TYPE: NQOD — SECTION 1 KVA: 33.20
MAIN: 600 AMP MB — KAIC: 10 — CONNECTED AMPS: 92.22

NEW PANEL 3D1 - SECTION 2

DESCRIPTION	LOAD (KVA)									LOAD (KVA)				DESCRIPTION
	LTG.	REC.	RES.	MOT.	CB	CKT	SN	CKT	CB	LTG.	REC.	RES.	MOT.	
RECEPTS - STORAGE		0.72			20/1	43	*	44	20/1		0.50			FIRE ALARM RPS
RECEPTS - STORAGE		0.72			20/1	45	*	46	20/1		0.72			RECEPTS - 201C
RECEPTS - STORAGE		0.72			20/1	47	*	48	20/1		0.72			RECEPTS - 201B
HEADWALLS - SKILLS LAB		0.50			20/1	49	*	50	20/1		0.72			RECEPTS - 201A
HEADWALLS - SKILLS LAB		0.50			20/1	51	*	52	20/1		1.00			RECEPTS - 201B PROJECTOR
HEADWALLS - SKILLS LAB		0.50			20/1	53	*	54	20/1		1.00			RECEPTS - 201C PROJECTOR
HEADWALLS - SKILLS LAB		0.50			20/1	55	*	56	20/1					SPARE
HEADWALLS - SKILLS LAB		0.50			20/1	57	*	58	20/1					SPARE
HEADWALLS - SKILLS LAB		0.50			20/1	59	*	60	20/1					SPARE
HEADWALLS - SKILLS LAB		0.50			20/1	61	*	62	20/1					SPARE
HEADWALLS - SKILLS LAB		0.50			20/1	63	*	64	20/1					SPARE
HEADWALLS - SKILLS LAB		0.50			20/1	65	*	66	20/1					SPARE
HEADWALLS - SKILLS LAB		0.50			20/1	67	*	68	20/1					SPARE
SPARE					20/1	69	*	70	20/1					SPARE
SPARE					20/1	71	*	72	20/1			1.00		FSD'S
SPARE					20/1	73	*	74	20/2					SPARE
SPARE					20/1	75	*	76						
SPARE					20/1	77	*	78	20/2					SPARE
WASHING MACHINE		1.20			20/1	79	*	80						
DRYER				4.00	30/2	81	*	82	30/2				6.50	COMPRESSOR
						83	*	84						
TOTAL		8.36		4.00							4.66	1.00	6.50	

VOLTS: 120/208V,3ø,4W — MTG: SURFACE
BUS: 600 AMP — TYPE: NQOD — SECTION 1 KVA: 33.20 — TOTAL KVA: 57.72
MAIN: 600 AMP MB — KAIC: 10 — SECTION 2 KVA: 24.52 — CONNECTED AMPS: 160.33

tBP
architecture planning interiors

tBP/Architecture
1777 Oakland Boulevard, Suite 320
Walnut Creek, CA 94596
ph: 925.246.6419
architect

WHM INCORPORATED
Engineering Consultants
1605 School Street
Moraga, CA 94556
tel (925)376-2902 • fax (925)376-2904
cad@whminc.com
consultant

IDENTIFICATION STAMP
DIV. OF THE STATE ARCHITECT
OFFICE OF REGULATION SERVICES
APPL #01-
FILE NO. 7-C1
AC — FLS — SS — DATE

DIVISION OF THE STATE ARCHITECT
1515 CLAY STREET
OAKLAND, CA 94612
ph:(510) 622-3101
agency

C-4008 APPLIED ARTS & ADMIN RENOVATION

2600 MISSION BELL DRIVE, SAN PABLO, CA 94806

CONTRA COSTA COMMUNITY COLLEGE DISTRICT
500 COURT STREET MARTINEZ, CA 94553
owner

tBP project number: 20865.00
file name: A111_DEMO 1ST.DWG
drawn by: DM — checked by: TLK
date: APRIL 30, 2019

rev:	date:	description:
	4/30/2019	RECORD SET

THIS DRAWING AND THE DESIGNS, DEPICTIONS, IDEAS AND OTHER INFORMATION CONTAINED HEREIN CONSTITUTE UNPUBLISHED WORK OF tBP/ARCHITECTURE AND SHALL REMAIN PROPERTY OF tBP/ARCHITECTURE IN PERPETUITY. NO PART THEREOF SHALL BE REPRODUCED, DISCLOSED, DISTRIBUTED, SOLD, PUBLISHED OR OTHERWISE USED IN ANY WAY WITHOUT THE ADVANCED EXPRESS WRITTEN CONSENT OF tBP/ARCHITECTURE.

drawing title: ELECTRICAL PANEL SCHEDULES

drawing no.: E003

drawing — of

Record Dwgs

04/30/19 1:18:25 PM F:\2016\16-069 CCC ARTS-ADMIN\RECORD SET\16069E003.DWG

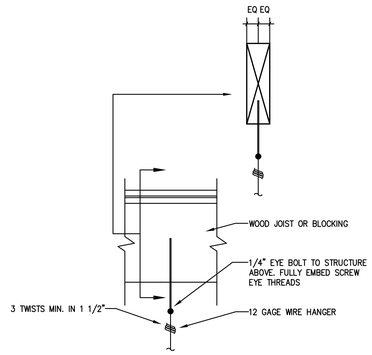

1 TYPICAL SAFETY WIRE CONNECTION

NOT TO SCALE

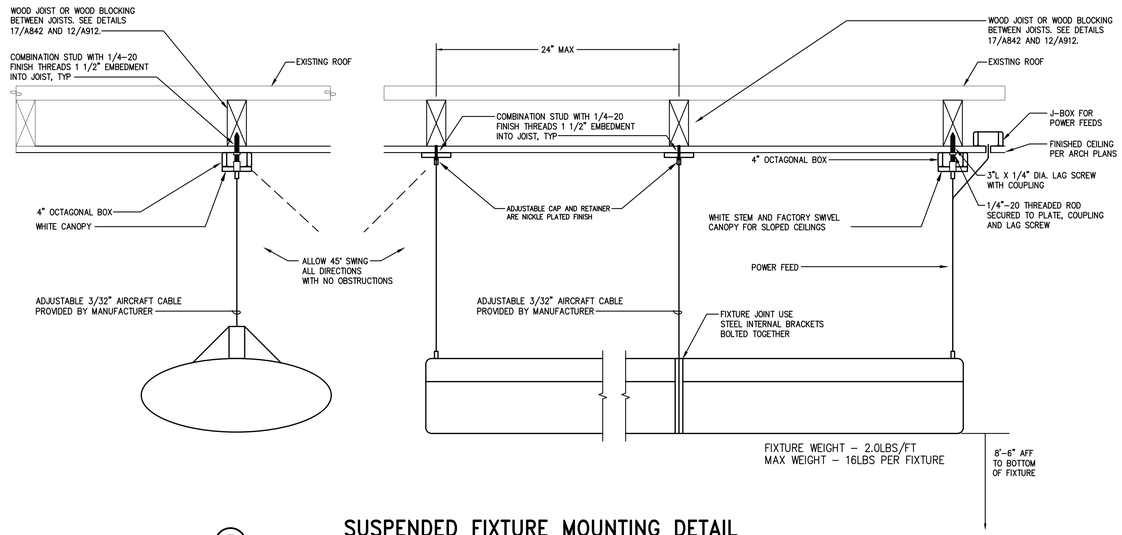

3 SUSPENDED FIXTURE MOUNTING DETAIL

NOT TO SCALE

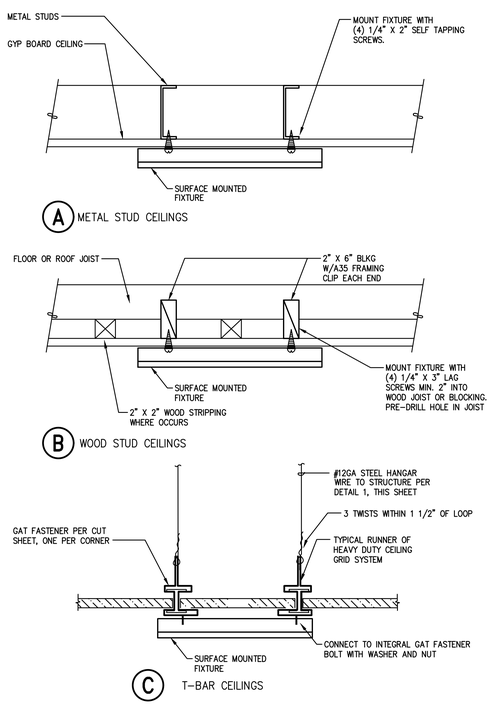

2 SURFACE MOUNTED FIXTURE DETAIL

NOT TO SCALE

Mounting Accessories — INFORMATION

Mounting Accessories (Surface, Strip, Wrap, and Industrial Fixtures)

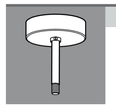

SINGLE STEM AND CANOPY

SS-8	8" stem (3/8" IPS) and canopy (ø5")
SS-12	12" stem (3/8" IPS) and canopy (ø5")
SS-18	18" stem (3/8" IPS) and canopy (ø5")
SS-24	24" stem (3/8" IPS) and canopy (ø5")
SS-36	36" stem (3/8" IPS) and canopy (ø5")

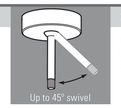

STEM AND SWIVEL CANOPY

SWS-8	8" stem (3/8" IPS) and swivel canopy (ø5")
SWS-12	12" stem (3/8" IPS) and swivel canopy (ø5")
SWS-24	24" stem (3/8" IPS) and swivel canopy (ø5")

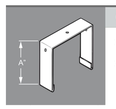

CEILING MOUNT BRACKET (Strip & Industrial)

320	1-1/2" ceiling spacer for use with 76 and 80 Series (Dimension A: 3-1/2")
325	1-1/2" ceiling spacer for use with 77, 78, 81, 82, 83, and 85 Series (Dimension A: 4-1/4")

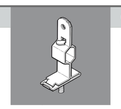

GAT FASTENER

GAT	T-bar attachment for 320 and 325 ceiling spacer, for use with strips, industrials, wraps, and surface mounts

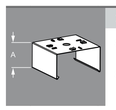

SURFACE MOUNT HANGER

SHS	Surface mount hanger for mounting 76 and 80 Series to NEMA-G T-bar system (Dimension A: 2-1/4")
SH1	Surface mount hanger for mounting 77, 78, 81, 82, 83, and 85 Series to NEMA-G T-bar system (Dimension A: 3-1/4")

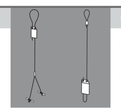

CABLE SUSPENSION KITS

GC2/Y18/__	Adjustable cable suspension system with "Y" intersection—available in lengths of 5', 10', 15', and 30'
GC2/L/10	10' adjustable cable suspension system with loop

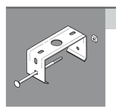

T2 TONG HANGER

T2	Tong type hanger for use with 77, 78, 81, 82, 83, and 85 Series

VBY HANGER

VBY	1 pair VBY hangers

Note: Above hanger is available with 2' or 3' precut #12 wrapped chain. To order specify length of chain in feet following VBY hanger catalog number (example: VBY-2).

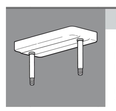

DOUBLE STEM AND CANOPY

DS-6	Double stem and canopy, 6"
DS-12	Double stem and canopy, 12"
DS-24	Double stem and canopy, 24"

Note: Requires DS/MOUNT fixture option, consult factory for specific fixture application availability

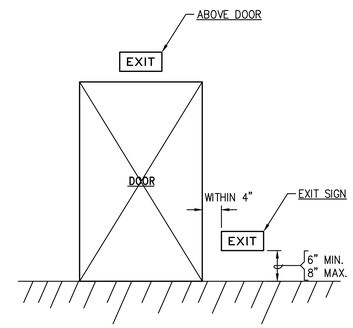

4 TYPICAL EXIT SIGN INSTALLATION

NOT TO SCALE

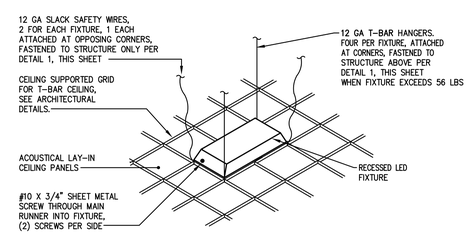

5 RECESSED LED FIXTURE MOUNTING DETAIL FOR T-BAR CEILING

NOT TO SCALE

tBP
architecture
planning
interiors
tBP/Architecture
1777 Oakland Boulevard, Suite 320
Walnut Creek, CA 94596
ph: 925.246.6419
architect

WHM INCORPORATED
Engineering Consultants
1505 School Street
Moraga, CA 94556
tel (925)376-2002 • fax (925)376-2904
cod@whminc.com
ts-249
consultant

IDENTIFICATION STAMP
DIV. OF THE STATE ARCHITECT
OFFICE OF REGULATION SERVICES
APPL # 01-
FILE NO. 7-C1
AC ___ FS ___ SS ___
DATE ___

DIVISION OF THE STATE ARCHITECT
1515 CLAY STREET
OAKLAND, CA94612
ph:(510) 622-3101
agency

C-4008 APPLIED ARTS & ADMIN RENOVATION

2600 MISSION BELL DRIVE, SAN PABLO, CA 94806

CONTRA COSTA COMMUNITY COLLEGE DISTRICT
500 COURT STREET MARTINEZ, CA 94553

owner

tBP project number:	20865.00
file name:	A111_DEMO 1ST.DWG
drawn by:	DM
checked by:	TLK
date:	APRIL 30, 2019

rev:	date:	description:
	4/30/2019	RECORD SET

THIS DRAWING AND THE DESIGNS, DEPICTIONS, IDEAS AND OTHER INFORMATION CONTAINED HEREIN, CONSTITUTE UNPUBLISHED WORK OF tBP/ARCHITECTURE AND SHALL REMAIN PROPERTY OF tBP/ARCHITECTURE IN PERPETUITY. NO PART THEREOF SHALL BE REPRODUCED, DISCLOSED, DISTRIBUTED, SOLD, PUBLISHED OR OTHERWISE USED IN ANY WAY WITHOUT THE ADVANCED EXPRESS WRITTEN CONSENT OF tBP/ARCHITECTURE.

drawing title:
ELECTRICAL DETAILS

drawing no.:
E004

drawing of

04/30/19 1:18:29 PM F:\2016\16-069 CCC ARTS-ADMIN\RECORD SET\16069E004.DWG

Record Dwgs

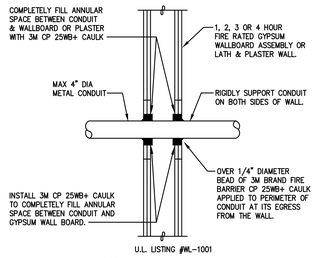

NOTE:
COORDINATE WITH WALL RATING ON ARCHITECTURAL PLANS.

1 CONDUIT PENETRATION DETAIL FOR FIRE RATED WALL

NOT TO SCALE

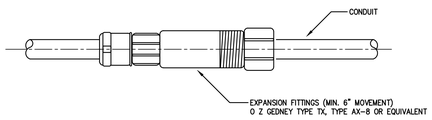

A FITTINGS FOR CONDUITS ON WALL

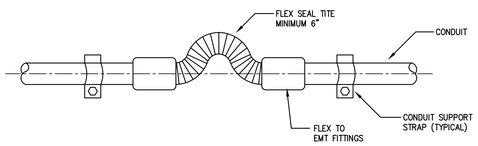

B FLEX JOINT FOR EXPOSED CONDUIT

2 CONDUIT EXPANSION FITTING DETAILS

NOT TO SCALE

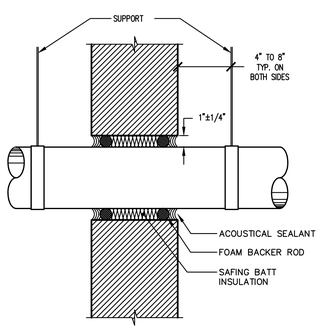

3 TYPICAL DUCT, PIPE, OR CONDUIT PENETRATION THROUGH SOUND-RATED CONSTRUCTION IN NON-RATED WALLS

NOT TO SCALE

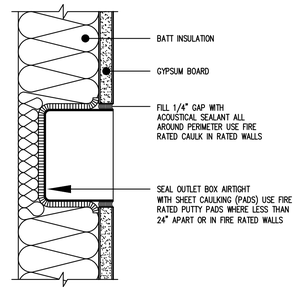

PADS MANUFACTURED BY:
HARRY A LOWRY & ASSOCIATES
11684 TUXFORD ST.
SUN VALLEY, CA. 91352
(818) 768-4661

AVAILABLE IN THE BAY AREA FROM:
HAROLD A. PRICE CO.
555 SOUTH 12TH ST.
RICHMOND, CA. 94804
(800) 772-2521

NOTE: WHERE FIRE-RATED PADS ARE REQUIRED, FSP FIRESTOP PUTTY PADS MAY BE USED; MANUFACTURED BY:
EGS ELECTRICAL GROUP; HEVI-DUTY/NELSON FIRESTOP
P.O. BOX 726
TULSA, OK. 74101
(800) 331-7325

4 OUTLET TREATMENT IN SOUND-RATED CONSTRUCTION DETAIL

NOT TO SCALE

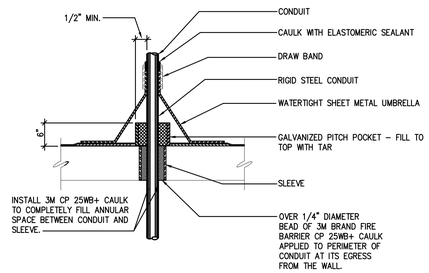

NOTE:
FIRE RATED PENETRATION TO MATCH (E) CONDITIONS. CONTRACTOR TO DOCUMENT (E) PENETRATION DETAIL AND REVIEW WITH ARCHITECT.

5 CONDUIT ROOF PENETRATION

NOT TO SCALE

NOTE: COORDINATE INSTALLATION WITH GENERAL CONTRACTOR

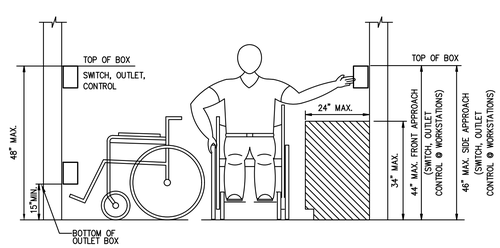

6 TYPICAL DEVICE MOUNTING DETAIL

NOT TO SCALE

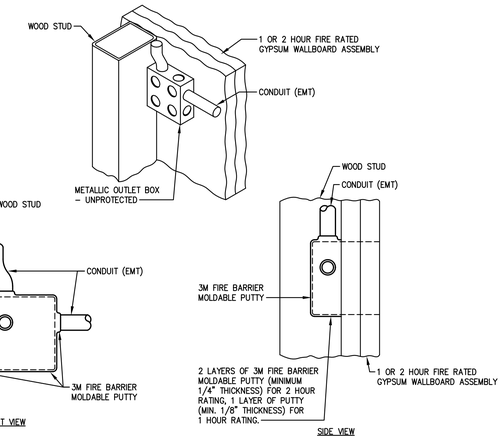

7 FIRE RATED BACKBOX INSTALLATION DETAIL

NOT TO SCALE

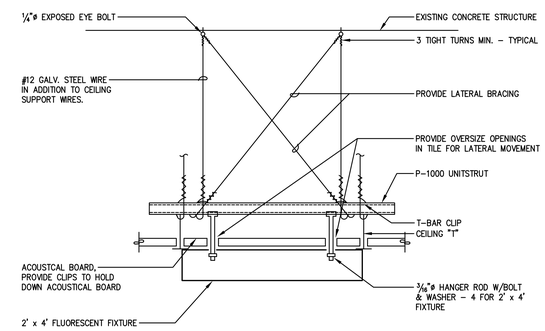

13 SURFACE MOUNTED FIXTURE ON T-BAR CEILING DETAIL

NOT TO SCALE

tBP
architecture
planning
interiors

tBP/Architecture
1777 Oakland Boulevard, Suite 320
Walnut Creek, CA 94596
ph: 925.246.6419

architect

WHM INCORPORATED
Engineering Consultants
1505 School Street
Moraga, CA 94556
tel (925)376-2302 • fax (925)376-2904
cod@whminc.com
ts-249

consultant

IDENTIFICATION STAMP
DIV. OF THE STATE ARCHITECT
OFFICE OF REGULATION SERVICES
APPL # 01-
FILE NO. 7-C1
AC ___ FLS ___ SS ___
DATE ___

DIVISION OF THE STATE ARCHITECT
1515 CLAY STREET
OAKLAND, CA94612
ph:(510) 622-3101

agency

C-4008 APPLIED ARTS & ADMIN RENOVATION

2600 MISSION BELL DRIVE, SAN PABLO, CA 94806

CONTRA COSTA COMMUNITY COLLEGE DISTRICT
500 COURT STREET MARTINEZ, CA 94553

owner

tBP project number:	20865.00
file name:	A111_DEMO 1ST.DWG
drawn by: DM	checked by: TLK
date: APRIL 30, 2019	

rev:	date:	description:
	4/30/2019	RECORD SET

THIS DRAWING AND THE DESIGNS, DEPICTIONS, IDEAS AND OTHER INFORMATION CONTAINED HEREIN CONSTITUTE UNPUBLISHED WORK OF tBP/ARCHITECTURE AND SHALL REMAIN PROPERTY OF tBP/ARCHITECTURE IN PERPETUITY. NO PART THEREOF SHALL BE REPRODUCED, DISCLOSED, DISTRIBUTED, SOLD, PUBLISHED OR OTHERWISE USED IN ANY WAY WITHOUT THE ADVANCED EXPRESS WRITTEN CONSENT OF tBP/ARCHITECTURE.

drawing title:
ELECTRICAL DETAILS

drawing no.:
E005

drawing of

04/30/19 1:18:31 PM F:\2018\16-069 CCC ARTS-ADMIN\RECORD SET\16069E005.DWG

Record Dwgs

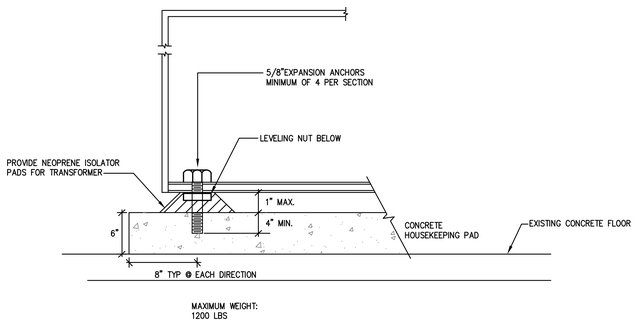

1 TRANSFORMER BOLT DOWN DETAIL

NOT TO SCALE

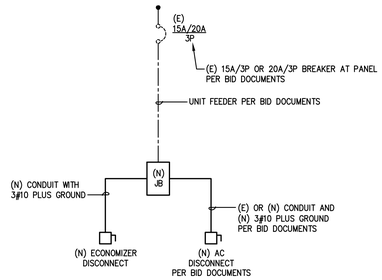

4 ELECTRICAL ONE-LINE DIAGRAM FOR NEW AC UNIT

NOT TO SCALE

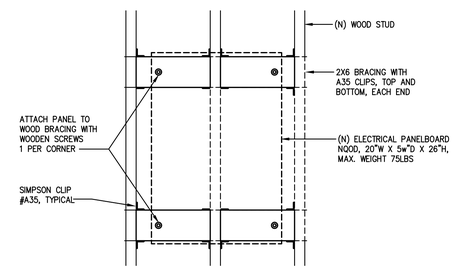

2 SURFACE PANELBOARD MOUNTING DETAIL

NOT TO SCALE

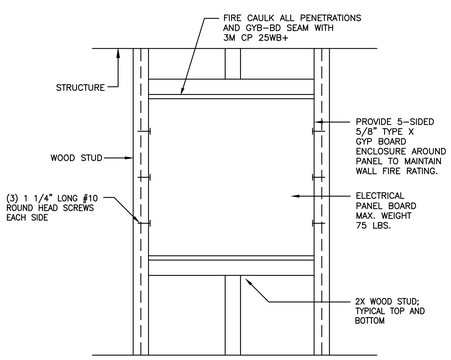

3 RECESSED PANEL MOUNTING DETAIL

NOT TO SCALE

tBP
architecture
planning
interiors

tBP/Architecture
1777 Oakland Boulevard, Suite 320
Walnut Creek, CA 94596
ph: 925.246.6419

architect

WHM INCORPORATED
Engineering Consultants
1205 School Street
Moraga, CA 94556
tel (925)376-2302 • fax (925)376-2904
cool@whmmc.com
ts-249

consultant

IDENTIFICATION STAMP
DIV. OF THE STATE ARCHITECT
OFFICE OF REGULATION SERVICES
APPL # 01-
FILE NO. 7-C1
AC ____ FLS ____ SS ____
DATE ____

DIVISION OF THE STATE ARCHITECT
1515 CLAY STREET
OAKLAND, CA94612
ph:(510) 622-3101

agency

C-4008 APPLIED ARTS & ADMIN RENOVATION

2600 MISSION BELL DRIVE, SAN PABLO, CA 94806

CONTRA COSTA COMMUNITY COLLEGE DISTRICT
500 COURT STREET MARTINEZ, CA 94553

owner

tBP project number: 20865.00
file name: A111_DEMO 1ST.DWG
drawn by: DM checked by: TLK
date: APRIL 30, 2019

rev:	date:	description:
	4/30/2019	RECORD SET

THIS DRAWING AND THE DESIGNS, DEPICTIONS, IDEAS AND OTHER INFORMATION CONTAINED HEREIN, CONSTITUTE UNPUBLISHED WORK OF tBP/ARCHITECTURE AND SHALL REMAIN PROPERTY OF tBP/ARCHITECTURE IN PERPETUITY. NO PART THEREOF SHALL BE REPRODUCED, DISCLOSED, DISTRIBUTED, SOLD, PUBLISHED OR OTHERWISE USED IN ANY WAY WITHOUT THE ADVANCED EXPRESS WRITTEN CONSENT OF tBP/ARCHITECTURE.

drawing title:
ELECTRICAL DETAILS

drawing no.:
E006

drawing of

04/30/19 1:18:33 PM F:\2016\16-069 CCC ARTS-ADMIN\RECORD SET\16069E006.DWG

Record Dwgs

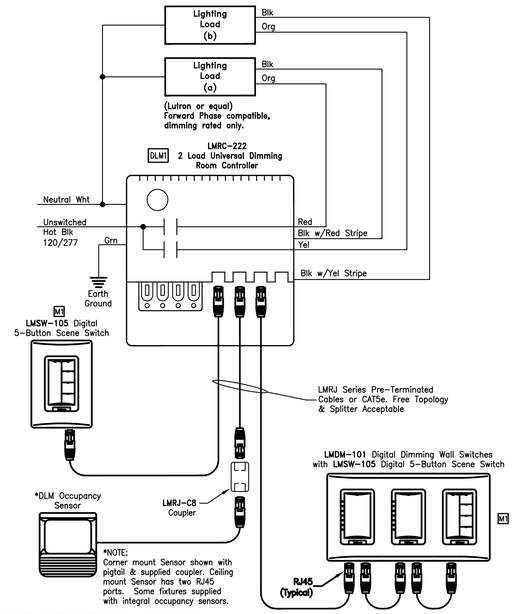

DEVICES ARE PRESET FOR PLUG n' GO™ OPERATION, ADJUSTMENT IS OPTIONAL. Sequence of Operation: In this configuration the LMRC-222 defaults to multi-level automatic-on/automatic-off operation. Load (a) on the LMRC-222 turns on automatically, while Load (b) defaults to manual-on control; all relays turn off automatically. Enhanced room controllers support up to 64 loads and 48 devices per DLM local network. At system startup, default dimming parameters are established including: levels for presets 1-4; fade times; and fade and ramp rates. Dimming and system parameters may be customized. For full operational details, adjustments and more features of the product, see the DLM System Installation Guide at www.wattstopper.com

LMRC-222 Two Load Universal Dimming Room Controller (3 Wire)

1 LIGHTING CONTROL WIRING DIAGRAM-NO DAYLIGHTING DLM1

NOT TO SCALE

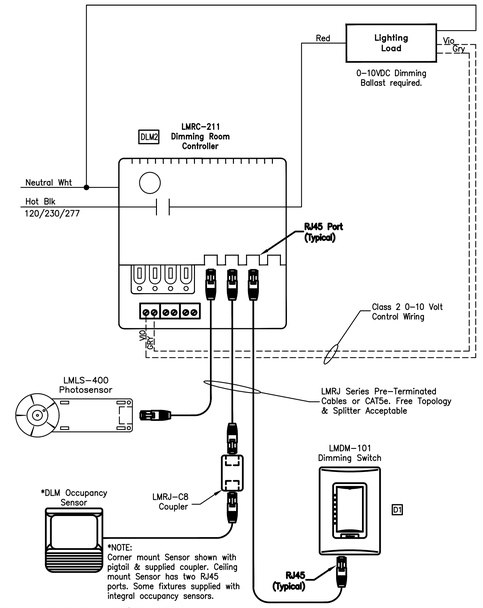

DEVICES ARE PRESET FOR PLUG n' GO™ OPERATION, ADJUSTMENT IS OPTIONAL.
Sequence of Operation: The LMLS-400 monitors the ambient light in the controlled space and works with the room controller(s) to maintain the design light level. WattStopper's exclusive control algorithm uses on/off or dimming setpoints and other control parameters to establish the correct light levels throughout the day regardless of changing daylight contribution.
For full operational details, adjustments and more features of the product, see the DLM System Installation Guide at www.wattstopper.com

LMLS-400 Single Zone Closed Loop Digital Photosensor

2 LIGHTING CONTROL WIRING DIAGRAM- WITH DAYLIGHTING DLM2

NOT TO SCALE

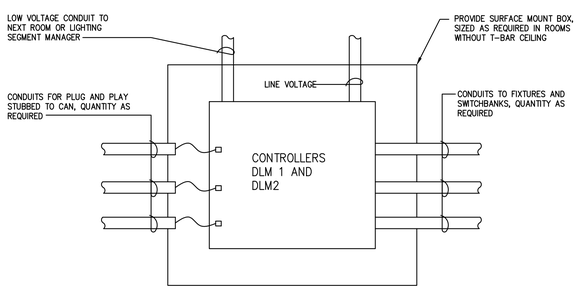

NOTES:
1. CONTRACTOR SHALL PROVIDE SURFACE MOUNT BOX, SIZED AS REQUIRED TO HOUSE CONTROLLER(S) DLM1 AND DLM2 IN EACH ROOM.

2. CONDUIT SHALL BE PROVIDED FOR ALL LINE VOLTAGE AND LOW VOLTAGE CABLES FROM LIGHT FIXTURES, SENSORS, ETC TO THE CONTROLLERS.

3 DLM1/DLM2 ROOM CONTROLLER MOUNTING DIAGRAM

NOT TO SCALE

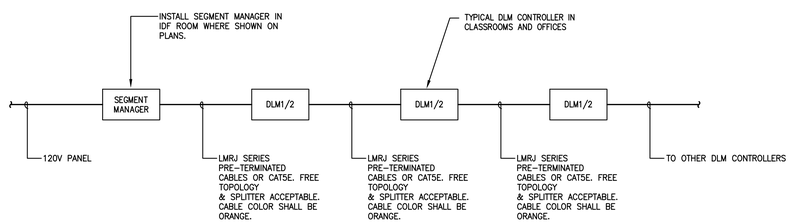

4 OVERALL LOW VOLTAGE WIRING DIAGRAM

NOT TO SCALE

tBP
architecture
planning
interiors

tBP/Architecture
1777 Oakland Boulevard, Suite 320
Walnut Creek, CA 94596
ph: 925.246.6419

architect

WHM INCORPORATED
Engineering Consultants
1205 School Street
Moraga, CA 94556
tel (925)376-2302 • Fax (925)376-2904
cool@whminc.com
ts-249

consultant

IDENTIFICATION STAMP
DIV. OF THE STATE ARCHITECT
OFFICE OF REGULATION SERVICES
APPL # 01-
FILE NO. 7-C1
AC ___ FLS ___ SS ___
DATE ___

DIVISION OF THE STATE ARCHITECT
1515 CLAY STREET
OAKLAND, CA94612
ph:(510) 622-3101

agency

C-4008 APPLIED ARTS & ADMIN RENOVATION

2600 MISSION BELL DRIVE, SAN PABLO, CA 94806

CONTRA COSTA COMMUNITY COLLEGE DISTRICT
500 COURT STREET MARTINEZ, CA 94553

owner

tBP project 20865.00
number:
file name: A111_DEMO 1ST.DWG

drawn by: DM checked by: TLK

date: APRIL 30, 2019

rev:	date:	description:
	4/30/2019	RECORD SET

THIS DRAWING AND THE DESIGNS, DEPICTIONS, IDEAS AND OTHER INFORMATION CONTAINED HEREIN CONSTITUTE UNPUBLISHED WORK OF tBP/ARCHITECTURE AND SHALL REMAIN PROPERTY OF tBP/ARCHITECTURE IN PERPETUITY. NO PART THEREOF SHALL BE REPRODUCED, DISCLOSED, DISTRIBUTED, SOLD, PUBLISHED OR OTHERWISE USED IN ANY WAY WITHOUT THE ADVANCED EXPRESS WRITTEN CONSENT OF tBP/ARCHITECTURE.

drawing title:
ELECTRICAL LIGHTING DIAGRAMS

drawing no.:
E007

drawing of

04/30/19 1:18:35 PM F:\2016\16-069 CCC ARTS-ADMIN\RECORD SET\16069E007.DWG

Record Dwgs

STATE OF CALIFORNIA

Electrical Power Distribution

CEC-NRCC-ELC-01-E (Revised 01/16) — CALIFORNIA ENERGY COMMISSION

CERTIFICATE OF COMPLIANCE	NRCC-ELC-01-E
Electrical Power Distribution	Page 1 of 4
Project Name: CONTRA COSTA COLLEGE ARTS & ADMIN RENOVATION	Date Prepared: 03-05-17

General Information

Project Address: 2600 MISSION BELL DR, SAN PABLO, 94806		Climate Zone: 3	Conditioned Floor Area : Unconditioned Floor Area :
Building Type:	☑ Nonresidential	☐ High-Rise Residential	☐ Hotel/Motel
☑ Schools	☐ Relocatable Public Schools	☐ Conditioned Spaces	☐ Unconditioned Spaces
Phase of Construction:	☐ New Construction	☐ Addition	☑ Alteration

In the table below identify all applicable construction documents that specify the requirements for the scope of responsibility reported by this certificate. Use additional pages as needed to list all construction documents related to compliance of Section 130.5.

Document Number	Document Title/Descriptions (include description information for Table or Schedule if it contains compliance information)	Document Sheet # or Page #	Indicate which subsection of Section 130.5 is related to the document (e.g. 130.5(a) for service electrical metering)

Add Row | Remove Last

A. Service Electrical Metering

Check one of the three boxes below if the electrical power distribution system is in compliance with Section 130.5(a).

☐ For newly installed electrical service in newly constructed buildings, Service Electrical Metering is required according to Section 130.5(a). *Fill out Column 1 through 6 of table below.*

☐ For new or replacement electrical service equipment in existing buildings, Service Electrical Metering is required according to Section 141.0(b)2Pi. *Fill out Column 1 through 6 of table below.*

☐ EXCEPTION to Electrical Service Metering: Service or feeder for which the utility company provides a metering system that indicates instantaneous kW demand and kWh for a utility-defined period. *Fill out Column 1, 2 and 6 of table below with the compliance information.*

Fill out a separate line for each electrical service that is connected to the building.

Electrical Service Schedule	Electrical Service Rating	Metering Capabilities (check all that are present)				Exception to 130.5 (a)	Field Inspector
01	02	03	04	05	06	07	08
Electrical Service Designation/ Location/Description	kVA	Instantaneous (at the time) kW	Historical peak (kW)	Tracking kWh for a user-definable period	kWh per rate period	Utility metering system	Check that the metering complies
(E) MSB 'AA'		☐	☐	☐	☐	☐	☐

Add Row | Remove Last

STATE OF CALIFORNIA

Electrical Power Distribution

CEC-NRCC-ELC-01-E (Revised 01/16) — CALIFORNIA ENERGY COMMISSION

CERTIFICATE OF COMPLIANCE	NRCC-ELC-01-E
Electrical Power Distribution	Page 2 of 4
Project Name: CONTRA COSTA COLLEGE ARTS & ADMIN RENOVATION	Date Prepared: 03-05-17

B. Separation of Electrical Circuits for Electrical Energy Monitoring

Check all boxes below if the electrical power distribution system is in compliance with Section 130.5(b).

☐ The electrical power distribution system meets the separation of electrical circuits for electrical energy monitoring requirement of Section 130.5(b). The electrical power distribution systems is designed so that measurement devices can monitor the electrical energy usage of load types according to TABLE 130.5-B.

☐ Describe the electrical power distribution system installed and the compliance method chosen in meeting the requirement of Section 130.5(b). Use the space below to include the information. Examples of compliance methods are detailed in Nonresidential Compliance Manual Chapter 8.

Fill out Column 1 thru 3 with the compliance information.

General Information	Electrical Power Distribution System information and Method of compliance	Electrical Service Rating	Enforcement Agency
01	02	03	04
Electrical Service Designation/Location/Description	Describe the electrical power distribution system installed and the compliance method used	kVA	Check that the system complies
PANEL 1PF PANEL 2LB PANEL 3D1	RECEPTACLES LIGHTING RECEPTACLES		☐

Field Inspector Notes:

STATE OF CALIFORNIA

Electrical Power Distribution

CEC-NRCC-ELC-01-E (Revised 01/16) — CALIFORNIA ENERGY COMMISSION

CERTIFICATE OF COMPLIANCE	NRCC-ELC-01-E
Electrical Power Distribution	Page 3 of 4
Project Name: CONTRA COSTA COLLEGE ARTS & ADMIN RENOVATION	Date Prepared: 03-05-17

C. Voltage Drop *Check all boxes below if he electrical power distribution system is in compliance with Section 130.5(c).*	**Enforcement Agency** Check that the system complies
☑ The electrical power distribution system meets the voltage drop requirement of Section 130.5(c). The maximum combined voltage drop on feeder conductors and branch circuit conductors to the farthest connected load or outlet, do not exceed 5%.	☐
☐ Voltage drop calculation documents showing compliance to Section 130.5(c) are submitted as part of the compliance document submittal.	☐

D. Circuit Controls for 120-Volt Receptacles and Controlled Receptacles *Check one or more boxes below for applicable requirements of Section 130.5(d) for the electrical power distribution system.*	**Field Inspector** Check that the system complies
☑ The control is capable of automatically shutting OFF the controlled receptacles when the space is typically unoccupied, either at the receptacle or circuit level. For the automatic time switch control, it incorporates an override control that allows the controlled receptacle to remain ON for no more than 2 hours when an override is initiated and an automatic holiday "shut-OFF" feature that turns OFF all loads for at least 24 hours and then resumes the normally scheduled operation. Countdown timer switches are not be used to comply with the automatic time switch control requirements. The controls meet the requirement of Section 130.5(d)1.	☐
☐ There is at least one controlled receptacle within 6 ft from each uncontrolled receptacle. Where receptacles are installed in modular furniture in open office area, at least one controlled receptacle is installed at each workstation. The receptacles meet the requirement of Section 130.5(d)2.	☐
☑ There are installed split wired receptacles with at least one controlled and one uncontrolled receptacle. Where receptacles are installed in modular furniture in open office area, at least one controlled receptacle is installed at each workstation. The receptacles meet the requirement of Section 130.5(d)2.	☐
☑ Permanent and durable marking for controlled receptacles or circuits to differentiate them from uncontrolled receptacles or circuits is provided. The markings meet the requirement of Section 130.5(d)3.	☐
☐ For hotel and motel guest rooms, there are controlled receptacles for at least one-half of the 120-volt receptacles in each guest room. Electric circuits serving controlled receptacles in guestrooms are installed to have captive key controls, occupancy sensing controls, or automatic controls so the power is switched off no longer than 30 minutes after the guest room has been vacated. The receptacles meet the requirement of Section 130.5(d)4.	☐
☐ Receptacles that are only for the following purposes are excepted from Section 130.5(d): - Receptacles specifically for refrigerators and water dispensers in kitchen areas. - Receptacles located a minimum of six ft above the floor that are specifically for clocks. - Receptacles for network copiers, fax machines, A/V and data equipment other than personal computers in copy rooms. - Receptacles on circuits rated more than 20 amperes. - Receptacles connected to an uninterruptible power supply (UPS) that are intended to be in continuous use, 24 hours per day/365 days per year, and are marked to differentiate them from other uncontrolled receptacles or circuits.	☐

STATE OF CALIFORNIA

Electrical Power Distribution

CEC-NRCC-ELC-01-E (Revised 01/16) — CALIFORNIA ENERGY COMMISSION

CERTIFICATE OF COMPLIANCE	NRCC-ELC-01-E
Electrical Power Distribution	Page 4 of 4
Project Name: CONTRA COSTA COLLEGE ARTS & ADMIN RENOVATION	Date Prepared: 03-05-17

DOCUMENTATION AUTHOR'S DECLARATION STATEMENT

1. I certify that this Certificate of Compliance documentation is accurate and complete.

Documentation Author Name: JOSE L. WE	Documentation Author Signature: [signature]
Company: WHM INC	Signature Date: 03/05/2017
Address: 1605 SCHOOL ST	CEA/ HERS Certification Identification (if applicable):
City/State/Zip: MORAGA, CA 94556	Phone: 925-376-2902

RESPONSIBLE PERSON'S DECLARATION STATEMENT

I certify the following under penalty of perjury, under the laws of the State of California:

1. The information provided on this Certificate of Compliance is true and correct.
2. I am eligible under Division 3 of the Business and Professions Code to accept responsibility for the building design or system design identified on this Certificate of Compliance (responsible designer).
3. The energy features and performance specifications, materials, components, and manufactured devices for the building design or system design identified on this Certificate of Compliance conform to the requirements of Title 24, Part 1 and Part 6 of the California Code of Regulations.
4. The building design features or system design features identified on this Certificate of Compliance are consistent with the information provided on other applicable compliance documents, worksheets, calculations, plans and specifications submitted to the enforcement agency for approval with this building permit application.
5. I will ensure that a completed signed copy of this Certificate of Compliance shall be made available with the building permit(s) issued for the building, and made available to the enforcement agency for all applicable inspections. I understand that a completed signed copy of this Certificate of Compliance is required to be included with the documentation the builder provides to the building owner at occupancy.

Responsible Designer Name: JOSE L. WE	Responsible Designer Signature: [signature]
Company : WHM INC	Date Signed: 03/05/2017
Address: 1605 SCHOOL ST	License: E 17369
City/State/Zip: MORAGA, CA 94556	Phone: 925-376-2902

tBP
architecture planning interiors
tBP/Architecture
1777 Oakland Boulevard, Suite 320
Walnut Creek, CA 94596
ph: 925.246.6419
architect

WHM INCORPORATED
Engineering Consultants
1605 School Street
Moraga, CA 94556
Tel (925)376-2902 * Fax (925)376-2904
cad@whminc.com
16-069
WHM
consultant

IDENTIFICATION STAMP
DIV. OF THE STATE ARCHITECT
OFFICE OF REGULATION SERVICES
APPL # 01-
FILE NO. 7-C1
AC ___ FLS ___ SS ___
DATE ___

DIVISION OF THE STATE ARCHITECT
1515 CLAY STREET
OAKLAND, CA94612
ph:(510) 622-3101
agency

C-4008 APPLIED ARTS & ADMIN RENOVATION

2600 MISSION BELL DRIVE, SAN PABLO, CA 94806

CONTRA COSTA COMMUNITY COLLEGE DISTRICT
500 COURT STREET MARTINEZ, CA 94553
owner

tBP project number: 20865.00
file name: A111_DEMO 1ST.DWG
drawn by: DM checked by: TLK
date: APRIL 30, 2019

rev:	date:	description:
	4/30/2019	RECORD SET

THIS DRAWING AND THE DESIGNS, DEPICTIONS, IDEAS AND OTHER INFORMATION CONTAINED HEREIN CONSTITUTE UNPUBLISHED WORK OF tBP/ARCHITECTURE AND SHALL REMAIN PROPERTY OF tBP/ARCHITECTURE IN PERPETUITY. NO PART THEREOF SHALL BE REPRODUCED, DISCLOSED, DISTRIBUTED, SOLD, PUBLISHED OR OTHERWISE USED IN ANY WAY WITHOUT THE ADVANCED EXPRESS WRITTEN CONSENT OF tBP/ARCHITECTURE.

drawing title:
ELECTRICAL TITLE 24 POWER DISTRIBUTION

drawing no.:
E008

drawing of

Record Dwgs

04/30/19 1:18:39 PM F:\2016\16-069 CCC ARTS-ADMIN\RECORD SET\16069E008.DWG

STATE OF CALIFORNIA
INDOOR LIGHTING
CEC-NRCC-LTI-01-E (Revised 04/18) — CALIFORNIA ENERGY COMMISSION

CERTIFICATE OF COMPLIANCE	NRCC-LTI-01-E
Indoor Lighting	(Page 1 of 6)
Project Name: CONTRA COSTA COLLEGE ARTS & ADMIN RENOVATION	Date Prepared: 03-05-17

A. General Information

Climate Zone: 3 — Conditional Floor Area: — Unconditional Floor Area:

Building Type:	☑	Nonresidential	☐	High-Rise Residential	☐	Hotel/Motel	
☑ Schools	☐	Relocatable Public Schools	☐	Conditioned Spaces	☐	Unconditioned Spaces	
Phase of Construction:	☐	New Construction	☐	Addition	☑	Alteration	
Method of Compliance:	☐	Complete Building	☑	Area Category	☐	Tailored	

Project Address: 2600 MISSION BELL DRIVE, SAN PABLO 94806

B. Lighting Compliance Documents (select yes for each document included)

For detailed instructions on the use of this and all Energy Efficiency Standards compliance documents, refer to the Nonresidential Manual published by the California Energy Commission.

YES	NO	COMP. DOC.	TITLE
⦿	○	NRCC-LTI-01-E	Certificate of Compliance. All Pages required on plans for all submittals.
⦿	○	NRCC-LTI-02-E	Lighting Controls, Certificate of Compliance, and PAF Calculation. All Pages required on plans for all submittals.
⦿	○	NRCC-LTI-03-E	Indoor Lighting Power Allowance
○	⦿	NRCC-LTI-04-E	Tailored Method Worksheets
○	⦿	NRCC-LTI-05-E	Line Voltage Track Lighting Worksheets
○	⦿	NRCC-LTI-06-E	Indoor Lighting Existing Conditions

STATE OF CALIFORNIA
INDOOR LIGHTING
CEC-NRCC-LTI-01-E (Revised 04/18) — CALIFORNIA ENERGY COMMISSION

CERTIFICATE OF COMPLIANCE	NRCC-LTI-01-E
Indoor Lighting	(Page 2 of 6)
Project Name: CONTRA COSTA COLLEGE ARTS & ADMIN RENOVATION	Date Prepared: 03-05-17

C. Summary of Allowed Lighting Power

Conditioned and Unconditioned space Lighting must not be combined for compliance

	Indoor Lighting Power for Conditioned Spaces		Watts		Indoor Lighting Power for Unconditioned Spaces		Watts
01	**Installed** Lighting NRCC-LTI-01-E, Table H, page 5	+	7589		**Installed** Lighting NRCC-LTI-01-E, Table H, page 5	+	
02	Portable Only for Offices NRCC-LTI-01-E, Table G, page 4	+					
03	Minus Lighting Control Credits NRCC-LTI-02-E, page 2	-			Minus Lighting Control Credits NRCC-LTI-02-E, page 2	-	
04	Adjusted **Installed** Lighting Power (row 1 plus row 2 minus row 3)	=	7589		Adjusted **Installed** Lighting Power (row 1 minus row 3)	=	0
	Complies ONLY if **Installed** ≤ **Allowed** (Box 04 < Box 05)				Complies ONLY if **Installed** ≤ **Allowed** (Box 04 < Box 05)		
05	**Allowed** Lighting Power Conditioned NRCC-LTI-03-E, page 1 Alterations with replacement luminaires that have at least 50/35%lower power compared to the original existing luminaires, may instead use the allowed wattage from NRCC-LTI-06, page 2		10679		**Allowed** Lighting Power Unconditioned NRCC-LTI-03-E, page 1 Alterations with replacement luminaires that have at least 50/35% lower power compared to the original existing luminaires, may instead use the allowed wattage from NRCC-LTI-06, page 2		

D. Declaration of Required Certificates of Installation

Declare by selecting yes for all of the Certificates that will be submitted. (Retain copies and verify forms are completed and signed.)

YES	NO	Form/Title	
○	⦿	NRCI-LTI-01-E - Must be submitted for all buildings	☐ Field Inspector
○	⦿	NRCI-LTI-02-E - Must be submitted for a lighting control system, or for an Energy Management Control System (EMCS), to be recognized for compliance.	☐ Field Inspector
○	⦿	NRCI-LTI-03-E - Must be submitted for a line-voltage track lighting integral current limiter, or for a supplementary overcurrent protection panel used to energize only line-voltage track lighting, to be recognized for compliance.	☐ Field Inspector
○	○	NRCI-LTI-04-E - Must be submitted for two interlocked systems serving an auditorium, a convention center, a conference room, a multipurpose room, or a theater to be recognized for compliance.	☐ Field Inspector
○	○	NRCI-LTI-05-E - Must be submitted for a Power Adjustment Factor (PAF) to be recognized for compliance.	☐ Field Inspector
○	○	NRCI-LTI-06-E - Must be submitted for additional wattage installed in a video conferencing studio to be recognized for compliance.	☐ Field Inspector

STATE OF CALIFORNIA
INDOOR LIGHTING
CEC-NRCC-LTI-01-E (Revised 04/18) — CALIFORNIA ENERGY COMMISSION

CERTIFICATE OF COMPLIANCE	NRCC-LTI-01-E
Indoor Lighting	(Page 3 of 6)
Project Name: CONTRA COSTA COLLEGE ARTS & ADMIN RENOVATION	Date Prepared: 03-05-17

E. Declaration of Required Certificates of Acceptance

Declare by selecting yes for all of the Certificates of Acceptance that will be submitted. (Retain copies and verify forms are completed and signed.)

YES	NO	FORM/TITLE	
○	○	NRCA-LTI-02-A - Must be submitted for occupancy sensors and automatic time switch controls.	☐ Field Inspector
○	○	NRCA-LTI-03-A - Must be submitted for automatic daylight controls.	☐ Field Inspector
○	○	NRCA-LTI-04-A - Must be submitted for demand responsive lighting controls.	☐ Field Inspector
○	○	NRCA-LTI-05-A - Must be submitted for institutional tuning power adjustment factor (PAF).	

A Separate Lighting Schedule Must Be Filled Out for Conditioned and Unconditioned Spaces. Installed Lighting Power listed on this Lighting Schedule is only for: ☑ **CONDITIONED SPACE** ☐ **UNCONDITIONED SPACE**

F. Indoor Lighting Schedule and Field Inspection Energy Checklist

- ☑ The actual Indoor lighting power listed on the next 2 pages includes all installed permanent and planned portable lighting systems.
- ☑ When Complete Building Method is used for compliance, list each different type of luminaire on separate lines.
- ☐ When Area Category Method or Tailored Method is used for compliance, list each different type of luminaire by each different function area on separate lines
- ☐ Also include track lighting in schedule, and submit the track lighting compliance document (NRCC-LTI-05-E) when line-voltage track lighting is installed.

STATE OF CALIFORNIA
INDOOR LIGHTING
CEC-NRCC-LTI-01-E (Revised 04/18) — CALIFORNIA ENERGY COMMISSION

CERTIFICATE OF COMPLIANCE	NRCC-LTI-01-E
Indoor Lighting	(Page 4 of 6)
Project Name: CONTRA COSTA COLLEGE ARTS & ADMIN RENOVATION	Date Prepared: 03-05-17

G. Installed Portable Luminaires in Offices – Exception to Section 140.6(a)

- This section shall be filled out ONLY for portable luminaires in offices (As defined in §100.1). All other planned portable luminaires shall be documented on next page of this compliance document.
- This section is used to determine if greater than 0.3 watts of portable lighting is planned for any office
- Fill out a separate line for each different office. Small offices that are typical (having the same general and portable lighting) may be grouped together. This allowance shall not be traded between offices having different lighting systems.

Office Portable Luminaire Schedule	Office Installed Portable Luminaire W/ft²							Office Location	Field Inspector	
01	02	03	04	05	06	07	08	09	10	
Complete Luminaire Description (i.e., LED, under cabinet, furniture mounted direct/indirect)	Watts per Luminaire	Number of Luminaires	Installed portable luminaire watts in this office (G02 x G03)	Square feet of this office	Watts per square foot (G04 / G05)	If G06 ≤ 0.3, enter zero; If G06 > 0.3, (G06-0.3)	(G05 x G07)	Identify Office area in which these portable luminaires are installed	Pass	Fail
			0				0		○	○
			0				0		○	○
			0				0		○	○
			0				0		○	○
			0				0		○	○
Total installed portable luminaire watts that are greater than 0.3 W/ft² per office:								Enter sum total of all pages into NRCC-LTI-01-E; Page 2		

STATE OF CALIFORNIA
INDOOR LIGHTING
CEC-NRCC-LTI-01-E (Revised 04/18) — CALIFORNIA ENERGY COMMISSION

CERTIFICATE OF COMPLIANCE	NRCC-LTI-01-E
Indoor Lighting	(Page 5 of 6)
Project Name: CONTRA COSTA COLLEGE ARTS & ADMIN RENOVATION	Date Prepared: 03-05-17

A Separate Lighting Schedule Must Be Filled Out for Conditioned and Unconditioned Spaces. Installed Lighting Power listed on this Lighting Schedule is only for:
☐ **CONDITIONED SPACE** ☐ **UNCONDITIONED SPACE**

H. Indoor Lighting Schedule and Field Inspection Energy Checklist

Luminaire Schedule		Installed Watts					Location	Field Inspector [1]	
01	02	C3	04		05	06	07	08	
			How wattage was determined						
Name or Item Tag	Complete Luminaire Description (i.e., 3 lamp fluorescent troffer, F32T8, one dimmable electronic ballast)	Watts per Luminaire	CEC Default from NMR	According to §130.0(c)	Number Luminaires	Total Installed Watts in this area (W01 x W05)	Primary Function area in which these luminaires are installed	Pass	Fail
A1/A1E	2' X 4' RECESSED LED	42	☐	☑	18	756		○	○
A2/A2E	2' X 4' RECESSED LED	59	☐	☑	31	1829		○	○
A3/A3E	2' X 4' RECESSED LED	70	☐	☑	16	1120		○	○
BE	1' X 4' SURFACE MOUNT LED	59	☐	☑	4	236		○	○
D/DE	1' X 4' SURFACE MOUNT LED	42	☐	☑	7	294		○	○
F/FE	4' LED STRIP LIGHT	44	☐	☑	20	880		○	○
G	2' X 4' RECESSED LED	56	☐	☑	2	112		○	○
H1/H2	1' X 4' SUSPENDED LED	48	☐	☑	7	336		○	○
J/JE	6" SQUARE RECESSED DOWNLIGHT	39	☐	☑	9	351		○	○
			INSTALLED WATTS PAGE TOTAL:			5914	Enter sum total of all pages into NRCC-LTI-01-E; Page 2		

STATE OF CALIFORNIA
INDOOR LIGHTING
CEC-NRCC-LTI-01-E (Revised 04/18) — CALIFORNIA ENERGY COMMISSION

CERTIFICATE OF COMPLIANCE	NRCC-LTI-01-E
Indoor Lighting	(Page 6 of 6)
Project Name: CONTRA COSTA COLLEGE ARTS & ADMIN RENOVATION	Date Prepared: 03-05-17

A Separate Lighting Schedule Must Be Filled Out for Conditioned and Unconditioned Spaces. Installed Lighting Power listed on this Lighting Schedule is only for:
☐ **CONDITIONED SPACE** ☐ **UNCONDITIONED SPACE**

H. Indoor Lighting Schedule and Field Inspection Energy Checklist

Luminaire Schedule		Installed Watts					Location	Field Inspector [1]	
01	02	C3	04		05	06	07	08	
			How wattage was determined						
Name or Item Tag	Complete Luminaire Description (i.e., 3 lamp fluorescent troffer, F32T8, one dimmable electronic ballast)	Watts per Luminaire	CEC Default from NMR	According to §130.0(c)	Number Luminaires	Total Installed Watts in this area (W01 x W05)	Primary Function area in which these luminaires are installed	Pass	Fail
K/KE	2' X 4' RECESSED LED	55	☐	☑	29	1595		○	○
L1/L2	5" X 4' LONG WALL WASHER LED	16	☐	☑	5	80		○	○
			☐	☑		0		○	○
			☐	☑		0		○	○
			☐	☑		0		○	○
			☐	☑		0		○	○
			☐	☑		0		○	○
			☐	☑		0		○	○
			INSTALLED WATTS PAGE TOTAL:			7589	Enter sum total of all pages into NRCC-LTI-01-E; Page 2		

STATE OF CALIFORNIA
INDOOR LIGHTING – LIGHTING CONTROLS
CEC-NRCC-LTI-02-E (Revised 04/18) — CALIFORNIA ENERGY COMMISSION

CERTIFICATE OF COMPLIANCE	NRCC-LTI-02-E
Indoor Lighting - Lighting Controls	(Page 1 of 3)
Project Name: CONTRA COSTA COLLEGE ARTS & ADMIN RENOVATION	Date Prepared: 03-05-17

A. Mandatory Lighting Control Declaration Statements (Indicate if the measure applies by checking yes or no below.)

YES	NO	Control Requirements
⦿	○	Lighting shall be controlled by self-contained lighting control devices which are certified to the Energy Commission according to the Title 20 Appliance Efficiency Regulations in accordance with Section 110.9.
⦿	○	Lighting shall be controlled by a lighting control system or energy management control system in accordance with §110.9. An Installation Certificate shall be submitted in accordance with Section 130.4(b).
○	⦿	One or more Track Lighting Integral Current Limiters shall be installed which have been certified to the Energy Commission in accordance with §110.9 and §130.0. Additionally, an Installation Certificate shall be submitted in accordance with Section 130.4(b).
○	⦿	A Track Lighting Supplementary Overcurrent Protection Panel shall be installed in accordance with Section 110.9 and Section 130.0. Additionally, an Installation Certificate shall be installed in accordance with Section 130.4(b).
⦿	○	All lighting controls and equipment shall comply with the applicable requirements in §110.9 and shall be installed in accordance with the manufacturer's instructions in accordance with Section 130.1.
⦿	○	All luminaires shall be functionally controlled with manual ON and OFF lighting controls in accordance with Section 130.1(a).
⦿	○	General lighting shall be separately controlled from all other lighting systems in an area. Floor and wall display, window display, case display, ornamental, and special effects lighting shall each be separately controlled on circuits that are 20 amps or less. When track lighting is used, general, display, ornamental, and special effects lighting shall each be separately controlled; in accordance with Section 130.1(a)4.
⦿	○	The general lighting of any enclosed area 100 square feet or larger, with a connected lighting load that exceeds 0.5 watts per square foot shall meet the multi-level lighting control requirements in accordance with Section 130.1(b).
⦿	○	All installed indoor lighting shall be equipped with controls that meet the applicable Shut-Off control requirements in Section 130.1(c).
⦿	○	Lighting in all Daylit Zones shall be controlled in accordance with the requirements in Section 130.1(d) and daylit zones are shown on the plans.
⦿	○	Lighting power in buildings larger than 10,000 square feet shall be capable of being automatically reduced in response to a Demand Responsive Signal in accordance with Section 130.1(e).
⦿	○	Before an occupancy permit is granted for a newly constructed building or area, or a new lighting system serving a building, area, or site is operated for normal use, indoor lighting controls serving the building, area, or site shall be certified as meeting the Acceptance Requirements for Code Compliance in accordance with Section 130.4 (a). The controls required to meet the Acceptance Requirements include automatic daylight controls, automatic shut-OFF controls, and demand responsive controls.

STATE OF CALIFORNIA
INDOOR LIGHTING – LIGHTING CONTROLS
CEC-NRCC-LTI-02-E (Revised 04/18) — CALIFORNIA ENERGY COMMISSION

CERTIFICATE OF COMPLIANCE	NRCC-LTI-02-E
Indoor Lighting - Lighting Controls	(Page 2 of 3)
Project Name: CONTRA COSTA COLLEGE ARTS & ADMIN RENOVATION	Date Prepared: 03-05-17

A separate document must be filled out for Conditioned and Unconditioned Spaces. This page is used only for the following:
☐ CONDITIONED SPACES ☐ UNCONDITIONED SPACES

B. Mandatory and Prescriptive Indoor Lighting Control Schedule, PAF Calculation, and Field Inspection Checklist

Lighting Control Schedule		Standards Complying With [1] (✓ all that apply, or leave empty if Exempted)								PAF Credit Calculation [2]			✓ if Acceptance Test Required	Field Inspector	
01	02	03	04	05	06	07	08	09	10	Lighting Controlled	11	12	13	14	15
Location in Building	Type/ Description of Lighting Control (i.e.: occupancy sensor, automatic time switch, dimmer, automatic daylight, etc...)	# of Units	§130.1(d)	§130.0(b)	§130.1(c)	§130.1(d)	§130.1(e)	§140.6(a)2	§140.6(d)			PAF	Credit (11 x 12)		Pass	Fail
DAYLIT AREAS	AUTO MULTI-LEVEL		☐	☐	☐	•	☐	☐	☐				0	☐	○	○
	DAYLIGHT CONTROL		☐	☐	☐	☐	☐	☐	☐				0	☐	○	○
ALL SPACES	DIMMERS		☐	•	☐	☐	☐	☐	☐				0	☐	○	○
ALL SPACES	OCCUPANCY SENSORS		☐	☐	•	☐	☐	☐	☐				0	☐	○	○
ALL SPACES	DEMAND RESPONSE		☐	☐	☐	☐	•	☐	☐				0	☐	○	○
			☐	☐	☐	☐	☐	☐	☐				0	☐	○	○
			☐	☐	☐	☐	☐	☐	☐				0	☐	○	○
Control Credit PAGE TOTAL (Sum of Column 13):													0			
IF MULTIPLE PAGES ARE USED, ENTER SUM TOTAL OF Control Credit for all pages HERE (Sum of all Column 13):														Enter Control Credit total into NRCC-LTI-01-E; Page 1.		

1. §130.1(a) = Manual area controls; §130.0(b) = Multi Level; §130.1(c) = Auto Shut-Off; §130.1(d) = Mandatory Daylight; §130.1(e) = Demand Responsive; §140.6(d) = Additional lighting controls installed to earn a PAF; §140.6(a) = Prescriptive Secondary Sidelit Daylight Controls.
2. Check Table 140.6-A for correct Factor. PAFs shall not be traded between conditioned and unconditioned spaces. As a condition to earn a PAF, an Installation Certificate is also required to be filled out, signed, and submitted.

STATE OF CALIFORNIA
INDOOR LIGHTING – LIGHTING CONTROLS
CEC-NRCC-LTI-02-E (Revised 04/18) — CALIFORNIA ENERGY COMMISSION

CERTIFICATE OF COMPLIANCE	NRCC-LTI-02-E
Indoor Lighting - Lighting Controls	(Page 3 of 3)
Project Name: CONTRA COSTA COLLEGE ARTS & ADMIN RENOVATION	Date Prepared: 03-05-17

DOCUMENTATION AUTHOR'S DECLARATION STATEMENT
1. I certify that this Certificate of Compliance documentation is accurate and complete.

Documentation Author Name:	JOSE L. WE	Documentation Author Signature:	
Company:	WHM INC	Signature Date:	03-05-17
Address:	1605 SCHOOL ST	CEA Certification Identification (if applicable):	
City/State/Zip:	MORAGA, CA 94556	Phone:	925-376-2902

RESPONSIBLE PERSON'S DECLARATION STATEMENT
I certify the following under penalty of perjury, under the laws of the State of California:
1. The information provided on this Certificate of Compliance is true and correct.
2. I am eligible under Division 3 of the Business and Professions Code to accept responsibility for the building design or system design identified on this Certificate of Compliance (responsible designer).
3. The energy features and performance specifications, materials, components, and manufactured devices for the building design or system design identified on this Certificate of Compliance conform to the requirements of Title 24, Part 1 and Part 6 of the California Code of Regulations.
4. The building design features or system design features identified on this Certificate of Compliance are consistent with the information provided on other applicable compliance documents, worksheets, calculations, plans and specifications submitted to the enforcement agency for approval with this building permit application.
5. I will ensure that a completed signed copy of this Certificate of Compliance shall be made available with the building permit(s) issued for the building, and made available to the enforcement agency for all applicable inspections. I understand that a completed signed copy of this Certificate of Compliance is required to be included with the documentation the builder provides to the building owner at occupancy.

Responsible Designer Name:	JOSE L. WE	Responsible Designer Signature:	
Company:	WHM INC	Date Signed:	03-05-17
Address:	1605 SCHOOL ST.	License:	E 17369
City/State/Zip:	MORAGA, CA 94556	Phone:	925-376-2902

STATE OF CALIFORNIA
INDOOR LIGHTING POWER ALLOWANCE
CEC-NRCC-LTI-03-E (Revised 04/18) — CALIFORNIA ENERGY COMMISSION

CERTIFICATE OF COMPLIANCE	NRCC-LTI-03-E
Certificate of Compliance - Indoor Lighting Power Allowance	(Page 1 of 4)
Project Name: CONTRA COSTA COLLEGE ARTS & ADMIN RENOVATION	Date Prepared: 03-05-17

A separate page must be filled out for Conditioned and Unconditioned Spaces. This page is only for:
☑ CONDITIONED spaces ☐ UNCONDITIONED spaces

A. SUMMARY TOTALS OF LIGHTING POWER ALLOWANCES

- If using Complete Building Method for compliance, use only the total in column (a) as total allowed building watts.
- If using Area Category Method, Tailored Method, or a combination of Area Category and Tailored Method for compliance, use only the total in column (b) as the total allowed building watts

	(a)	(b)
01 Complete Building Method Allowed Watts. Documented in section B of NRCC-LTI-03-E (below on this page)	0	
02 Area Category Method Allowed Watts. Documented in section C-1 of NRCC-LTI-03-E (below on this page)		10679
03 Tailored Method Allowed Watts. Documented in section A of NRCC-LTI-04-E		
TOTAL ALLOWED BUILDING WATTS. Enter number into correct cell on NRCC-LTI-01, Page 2, Row 1	0	10679

☐ Check here if building contains both conditioned and unconditioned areas.

B. COMPLETE BUILDING METHOD LIGHTING POWER ALLOWANCE

01	02		03		04
TYPE OF BUILDING (From §140.6-Table 140.6-B)	WATTS PER ft²	X	COMPLETE BLDG. AREA	=	ALLOWED WATTS
					0
Total Area:					
Total Watts. Enter Total Watts into section A, row 1 (Above on this page)					0

C -1 AREA CATEGORY METHOD TOTAL LIGHTING POWER ALLOWANCES	Watts
Total from section C-2.	
Total from section C-3.	
Total Watts. Enter Total Watts into section A, row 2 (Above on this page).	0
For Alterations Only – Reduced lighting power option (Total Allowed Watts x 0.85). Enter this value into section A, row 2 if using this option.	

STATE OF CALIFORNIA
INDOOR LIGHTING POWER ALLOWANCE
CEC-NRCC-LTI-03-E (Revised 04/18) — CALIFORNIA ENERGY COMMISSION

CERTIFICATE OF COMPLIANCE	NRCC-LTI-03-E
Certificate of Compliance - Indoor Lighting Power Allowance	(Page 2 of 4)
Project Name: CONTRA COSTA COLLEGE ARTS & ADMIN RENOVATION	Date Prepared: 03-05-17

A separate page must be filled out for Conditioned and Unconditioned Spaces. This page is only for:
☐ CONDITIONED spaces ☐ UNCONDITIONED spaces

C -2 AREA CATEGORY METHOD GENERAL LIGHTING POWER ALLOWANCE

- Do not include portable lighting for offices. Portable lighting for offices shall be documented only in Section G of NRCC-LTI-01-E.
- Separately list lighting for each primary function area as defined in §100.1 of the Standards.

01		02		03		04
AREA CATEGORY [From §140.6 Table 140.6-C]		WATTS PER ft²	X	AREA (ft²)	=	ALLOWED WATTS
Location in Building	Primary Function Area per Table 140.6-C					
2ND FLOOR	OFFICE < 250 SF	1.0		907		907
2ND FLOOR	OFFICE > 250 SF	0.75		1137		852.75
1ST FLOOR	STORAGE	0.6		1985		1191
2ND FLOOR	CLASSROOM	1.2		3598		4317.6
1ST FLOOR	ELEC/DATA ROOMS	0.7		188		131.6
2ND FLOOR	CORRIDOR	0.6		397		238.2
2ND FLOOR	MEDICAL/CLINICAL CARE	1.2		1804		2164.8
2ND FLOOR	LAB AREA	1.4		663		928.2
						0
						0
						0

GENERAL NOTES

1. ALL EXISTING DEVICES, CONDUIT AND WIRING TO REMAIN, UNLESS OTHERWISE NOTED.

SHEET NOTES

1. EXISTING LIGHT FIXTURES, SWITCHES, CONDUIT AND WIRING IN THIS AREA TO BE REMOVED. AS-BUILT DRAWINGS FOR THIS AREA ARE NOT AVAILABLE. VERIFY ALL CIRCUITRY IN FIELD.
2. RECONNECT TO NEW CIRCUIT PER NEW PLAN.
3. DISCONNECT (2) CORRIDOR FIXTURES FROM EXISTING CIRCUIT AND CONTROLS.
4. EXISTING LIGHTING CIRCUIT TO BE RE-USED FOR NEW FIXTURES.

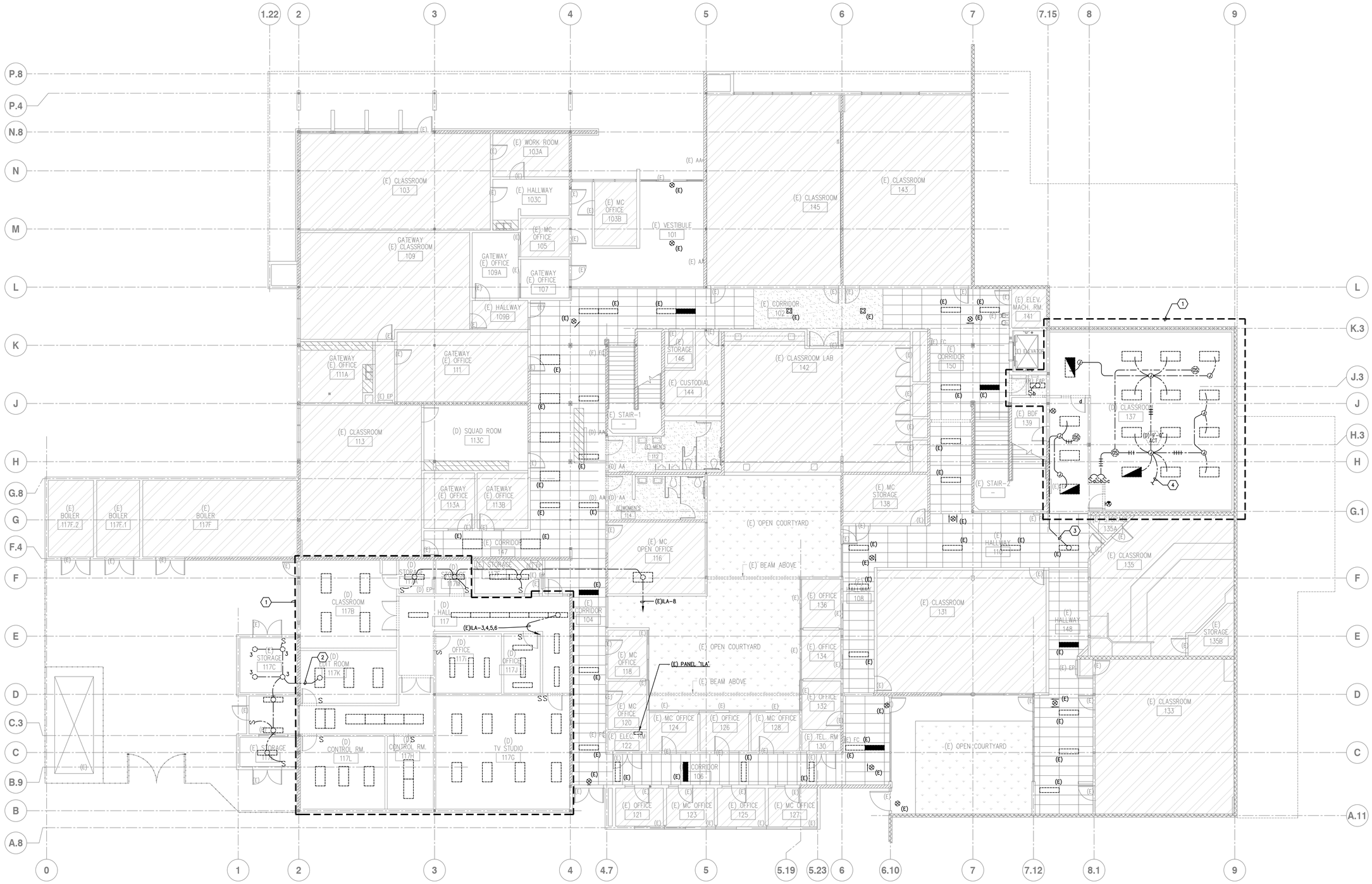

1 ELECTRICAL LIGHTING DEMOLITION PLAN – FIRST FLOOR

SCALE: 1/8" = 1'-0"

N

04/30/19 1:18:50 PM F:\2016\16-069 CCC ARTS-ADMIN\RECORD SET\16069E111.DWG

tBP architecture planning interiors

tBP/Architecture
1777 Oakland Boulevard, Suite 320
Walnut Creek, CA 94596
ph: 925.246.6419

architect

WHM INCORPORATED
Engineering Consultants
1205 School Street
Moraga, CA 94556
tel (925)376-2202 • Fax (925)376-2904
cool@whminc.com
ts-249

consultant

IDENTIFICATION STAMP
DIV. OF THE STATE ARCHITECT
OFFICE OF REGULATION SERVICES
APPL # 01-
FILE NO. 7-C1
AC ___ FS ___ SS ___
DATE

DIVISION OF THE STATE ARCHITECT
1515 CLAY STREET
OAKLAND, CA94612
ph:(510) 622-3101

agency

C-4008 APPLIED ARTS & ADMIN RENOVATION

2600 MISSION BELL DRIVE, SAN PABLO, CA 94806

CONTRA COSTA COMMUNITY COLLEGE DISTRICT
500 COURT STREET MARTINEZ, CA 94553

owner

tBP project number: 20865.00
file name: A111_DEMO 1ST.DWG
drawn by: DM checked by: TLK
date: APRIL 30, 2019

rev:	date:	description:
	4/30/2019	RECORD SET

ALL DRAWINGS AND WRITTEN MATERIAL, REPRESENTATIONS, IDEAS AND OTHER INFORMATION CONTAINED HEREIN CONSTITUTE UNPUBLISHED WORK OF tBP/ARCHITECTURE AND SHALL REMAIN PROPERTY OF tBP/ARCHITECTURE IN PERPETUITY. NO PART THEREOF SHALL BE REPRODUCED, DISCLOSED, DISTRIBUTED, SOLD, PUBLISHED OR OTHERWISE USED IN ANY WAY WITHOUT THE ADVANCED EXPRESS WRITTEN CONSENT OF tBP/ARCHITECTURE.

drawing title:
ELECTRICAL LIGHTING DEMO PLAN - 1ST FLOOR

drawing no.: E111

drawing of

Record Dwgs

GENERAL NOTES

1. ALL EXISTING DEVICES, CONDUIT AND WIRING TO REMAIN, UNLESS OTHERWISE NOTED.

SHEET NOTES

1. EXISTING ELECTRICAL DEVICES, CONDUIT AND WIRING IN THIS AREA ARE TO BE DISCONNECTED AND REMOVED. AS-BUILT DRAWINGS FOR THIS AREA ARE NOT AVAILABLE. VERIFY ALL CIRCUITRY IN THE FIELD.
2. EXISTING GFI OUTLET TO BE DISCONNECTED AND REMOVED.
3. EXISTING CONDUIT AND WIRING TO BE INTERCEPTED AND RECONNECTED TO NEW RECEPTACLE PER NEW PLAN. CONDUIT MAY BE UNDER SLAB. VERIFY IN FIELD. IF UNDER SLAB, REMOVE CONDUCTORS AND RECONNECT WITH NEW CONDUIT AND WIRE.

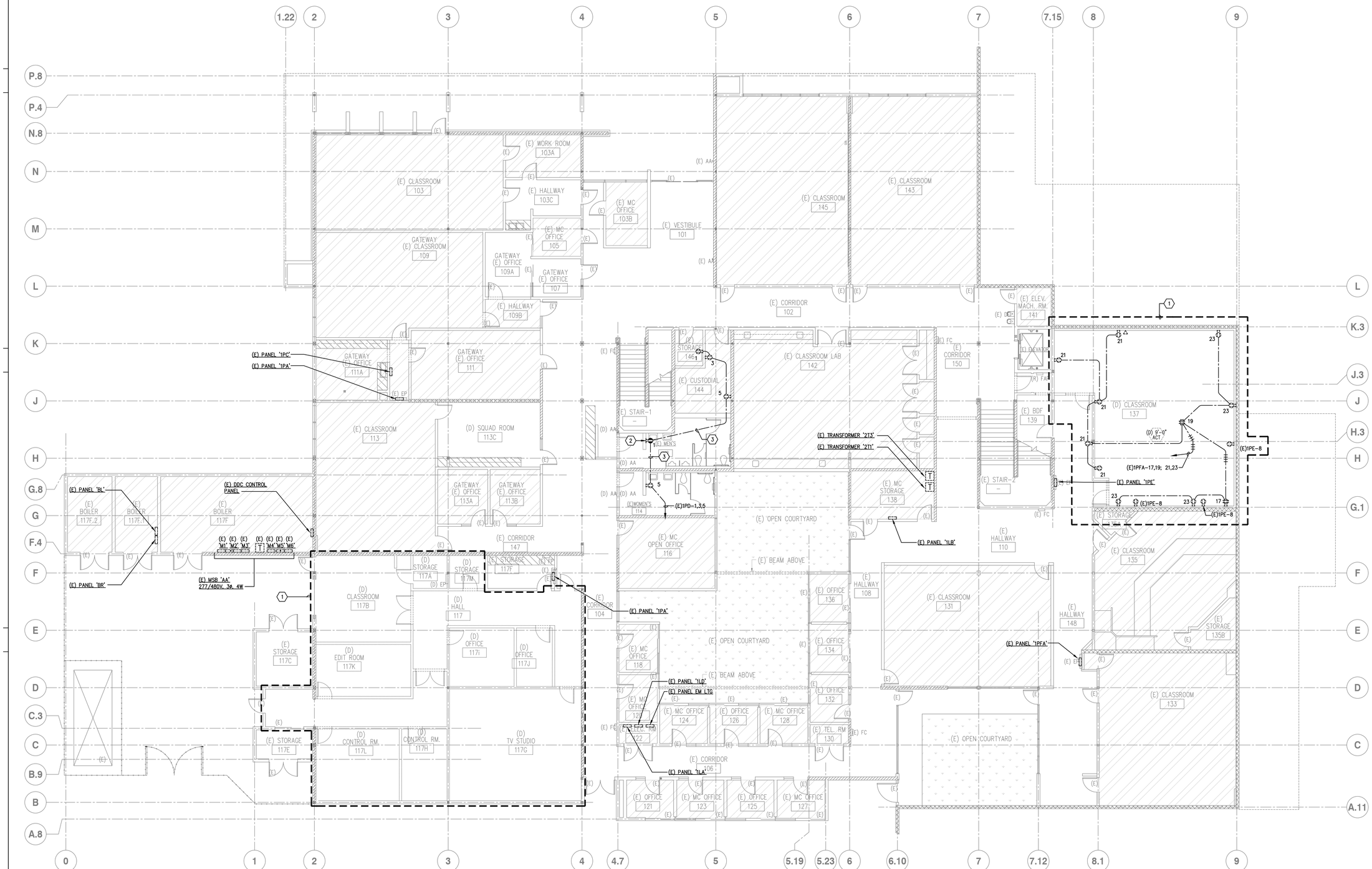

1 ELECTRICAL DEMOLITION POWER PLAN – FIRST FLOOR

SCALE: 1/8" = 1'-0"

N

04/30/19 1:18:52 PM F:\2016\16-069 CCC ARTS-ADMIN\RECORD SET\16069E112.DWG

tBP architecture planning interiors

tBP/Architecture
1777 Oakland Boulevard, Suite 320
Walnut Creek, CA 94596
ph: 925.246.6419

architect

WHM INCORPORATED
Engineering Consultants
1205 School Street
Moraga, CA 94556
tel (925)376-2202 • Fax (925)376-2904
cool@whminc.com
ts-249

consultant

IDENTIFICATION STAMP
DIV. OF THE STATE ARCHITECT
OFFICE OF REGULATION SERVICES
APPL # 01-
FILE NO. 7-C1
AC ___ FS ___ SS ___
DATE ___

DIVISION OF THE STATE ARCHITECT
1515 CLAY STREET
OAKLAND, CA94612
ph:(510) 622-3101

agency

C-4008 APPLIED ARTS & ADMIN RENOVATION

2600 MISSION BELL DRIVE, SAN PABLO, CA 94806

CONTRA COSTA COMMUNITY COLLEGE DISTRICT
500 COURT STREET MARTINEZ, CA 94553

owner

tBP project number:	20865.00
file name:	A111_DEMO 1ST.DWG
drawn by: DM	checked by: TLK
date:	APRIL 30, 2019

rev:	date:	description:
	4/30/2019	RECORD SET

ALL DRAWINGS AND WRITTEN MATERIAL, REPRESENTATIONS, IDEAS AND OTHER INFORMATION CONTAINED HEREIN CONSTITUTE UNPUBLISHED WORK OF tBP/ARCHITECTURE AND SHALL REMAIN PROPERTY OF tBP/ARCHITECTURE IN PERPETUITY. NO PART THEREOF SHALL BE REPRODUCED, DISCLOSED, DISTRIBUTED, SOLD, PUBLISHED OR OTHERWISE USED IN ANY WAY WITHOUT THE ADVANCED EXPRESS WRITTEN CONSENT OF tBP/ARCHITECTURE.

drawing title:
ELECTRICAL POWER DEMO PLAN - 1ST FLOOR

drawing no.:
E112

drawing of

Record Dwgs

GENERAL NOTES

1. ALL EXISITNG DEVICES, CONDUIT AND WIRING TO REMAIN, UNLESS OTHERWISE NOTED.

SHEET NOTES

(1) EXISTING FIRE ALARM DEVICES TO BE DISCONNECTED AND REMOVED. DEVICES SHALL NOT BE SALVAGED/STOCKPILED FOR FUTURE USE.

(2) EXISTING RPS TO BE DISCONNECTED AND RELOCATED.

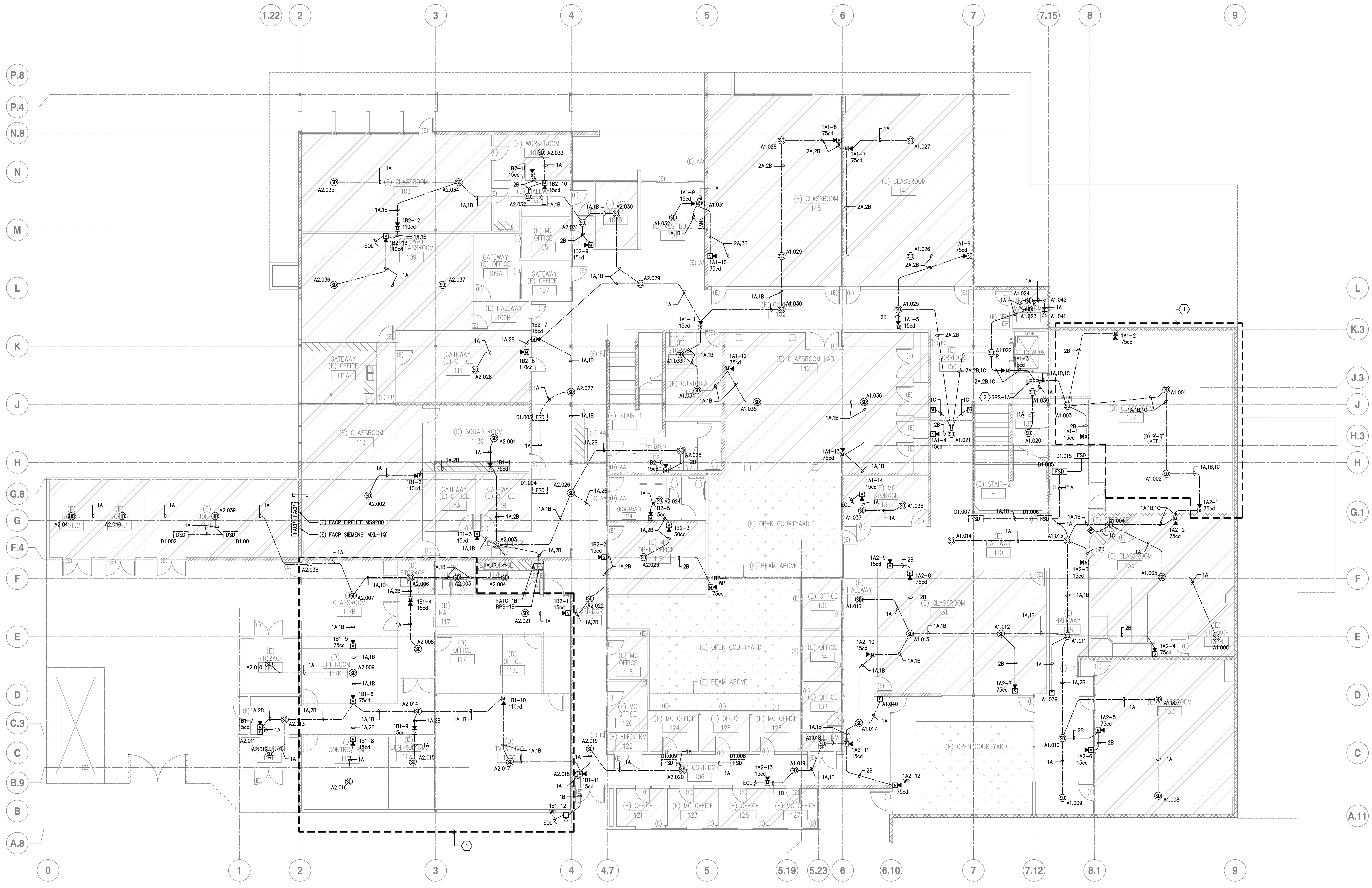

(1) ELECTRICAL FIRE ALARM DEMOLITION PLAN – FIRST FLOOR

SCALE: 1/8" = 1'-0"

tBP architecture planning interiors

tBP/Architecture
1777 Oakland Boulevard, Suite 320
Walnut Creek, CA 94596
ph: 925.246.6419

architect

WHM INCORPORATED
Engineering Consultants

consultant

DIVISION OF THE STATE ARCHITECT
1515 CLAY STREET
OAKLAND, CA 94612
ph:(510) 622-3101

agency

C-4008 APPLIED ARTS & ADMIN RENOVATION

2600 MISSION BELL DRIVE, SAN PABLO, CA 94806

CONTRA COSTA COMMUNITY COLLEGE DISTRICT
500 COURT STREET MARTINEZ, CA 94553

owner

tBP project number: 20865.00
file name: A111_DEMO 1ST.DWG
drawn by: DM checked by: TLK
date: APRIL 30, 2019

rev:	date:	description:
	4/30/2019	RECORD SET

THIS DRAWING AND THE DESIGNS, DEPICTIONS, IDEAS AND OTHER INFORMATION CONTAINED HEREIN CONSTITUTE UNPUBLISHED WORK OF tBP/ARCHITECTURE AND SHALL REMAIN PROPERTY OF tBP/ARCHITECTURE IN PERPETUITY. NO PART THEREOF SHALL BE REPRODUCED, DISCLOSED, DISTRIBUTED, SOLD, PUBLISHED OR OTHERWISE USED IN ANY WAY WITHOUT THE ADVANCED EXPRESS WRITTEN CONSENT OF tBP/ARCHITECTURE.

drawing title:
ELECTRICAL FIRE ALARM DEMO PLAN - 1ST FLOOR

drawing no.:
E113

drawing of

Record Dwgs

GENERAL NOTES

1. ALL EXISITNG DEVICES, CONDUIT AND WIRING TO REMAIN, UNLESS OTHERWISE NOTED.

SHEET NOTES

1. EXISTING LIGHT FIXTURES, SWITCHES, CONDUIT AND WIRING IN THIS AREA TO BE REMOVED.
2. EXISTING LIGHT SWITCH TO BE RELOCATED TO THE OTHER SIDE OF THE WALL.
3. EXISTING LIGHT CIRCUITS TO SURROUNDING AREAS TO BE INTERCEPTED AND RECONNECTED TO NEW PANEL.
4. EXISTING FIXTURES CIRCUITED TO PANEL '2LA'.
5. EXISTING FIXTURES CIRCUITED TO PANEL '2LB'. RECONNECT TO NEW PANEL.
6. EXISTING CORRIDOR FIXTURES CIRCUITED TO PANEL '2LB'. RECONNECT TO NEW PANEL.

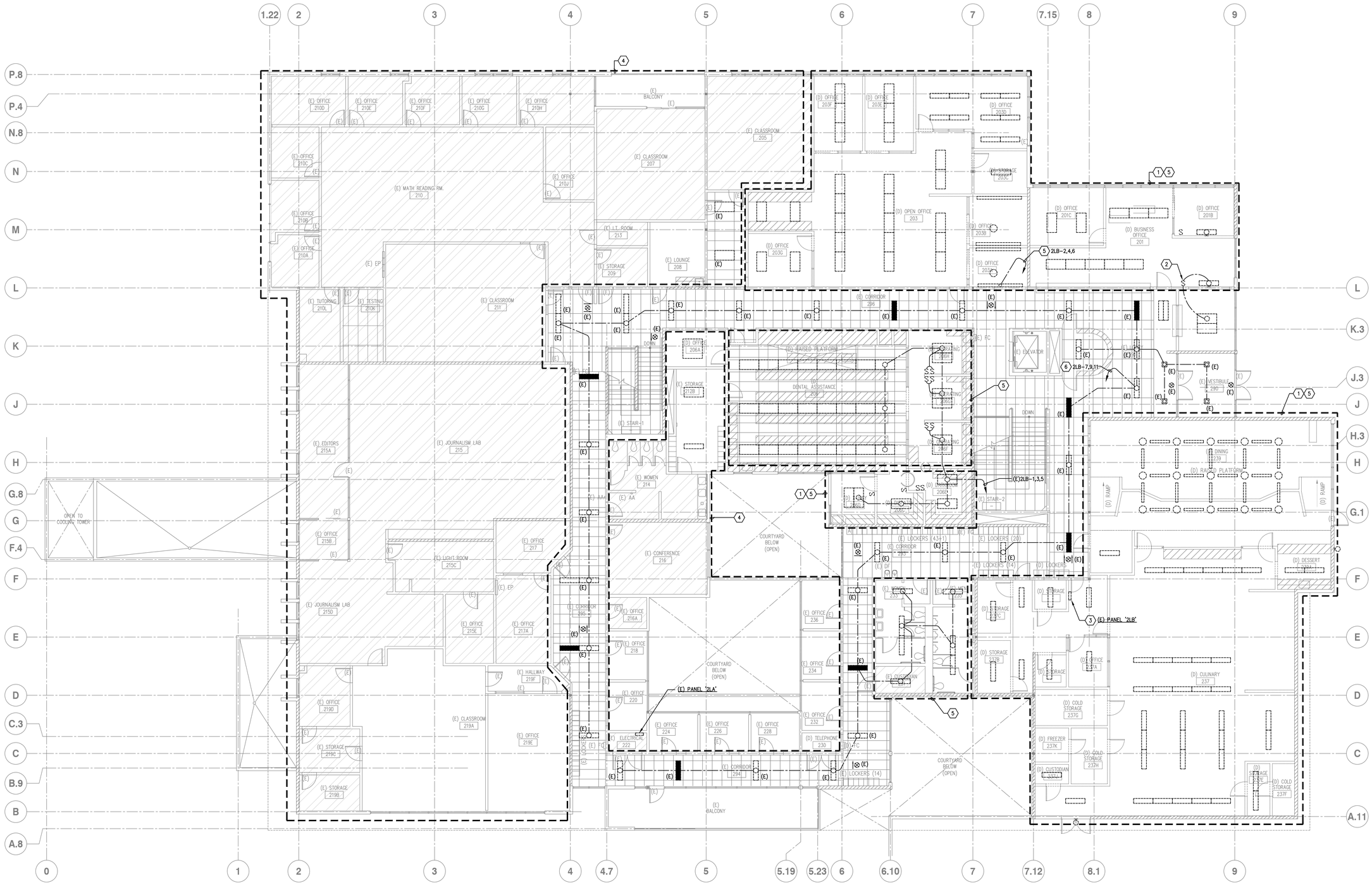

1 ELECTRICAL DEMOLITION PLAN – SECOND FLOOR

SCALE: 1/8" = 1'-0"

N

tBP
architecture
planning
interiors

tBP/Architecture
1777 Oakland Boulevard, Suite 320
Walnut Creek, CA 94596
ph: 925.246.6419

architect

WHM INCORPORATED
Engineering Consultants
1305 School Street
Napa, CA 94558
tel (707)226-2002 • fax (707)226-2904
cool@whminc.com
ts-249

consultant

IDENTIFICATION STAMP
DIV. OF THE STATE ARCHITECT
OFFICE OF REGULATION SERVICES
APPL # 01-
FILE NO. 7-C1
AC ___ FS ___ SS ___
DATE

DIVISION OF THE STATE ARCHITECT
1515 CLAY STREET
OAKLAND, CA94612
ph:(510) 622-3101

agency

C-4008 APPLIED ARTS & ADMIN RENOVATION

2600 MISSION BELL DRIVE, SAN PABLO, CA 94806

CONTRA COSTA COMMUNITY COLLEGE DISTRICT
500 COURT STREET MARTINEZ, CA 94553

owner

tBP project number:	20865.00
file name:	A111_DEMO 1ST.DWG
drawn by: DM	checked by: TLK
date: APRIL 30, 2019	

rev:	date:	description:
	4/30/2019	RECORD SET

THIS DRAWING AND THE DESIGNS, DEPICTIONS, IDEAS AND OTHER INFORMATION CONTAINED HEREIN CONSTITUTE UNPUBLISHED WORK OF tBP/ARCHITECTURE AND SHALL REMAIN PROPERTY OF tBP/ARCHITECTURE IN PERPETUITY. NO PART THEREOF SHALL BE REPRODUCED, DISCLOSED, DISTRIBUTED, SOLD, PUBLISHED OR OTHERWISE USED IN ANY WAY WITHOUT THE ADVANCED EXPRESS WRITTEN CONSENT OF tBP/ARCHITECTURE.

drawing title:
ELECTRICAL LIGHTING DEMO PLAN - 2ND FLOOR

drawing no.:
E121

drawing of

04/30/19 1:18:57 PM F:\2016\16-069 CCC ARTS-ADMIN\RECORD SET\16069E121.DWG

Record Dwgs

GENERAL NOTES

1. ALL EXISITNG DEVICES, CONDUIT AND WIRING TO REMAIN, UNLESS OTHERWISE NOTED.

SHEET NOTES

1. EXISTING ELECTRICAL DEVICES, CONDUIT AND WIRING IN THIS AREA IS TO BE DISCONNECTED AND REMOVED. COMPLETE AS-BUILTS ARE NOT AVAILABLE. VERIFY ALL CIRCUITING IN FIELD.
2. EXISTING POWER CIRCUITS TO LAB TABLES IS TO BE DISCONNECTED AND REMOVED.
3. EXISTING CIRCUIT(S) TO BE DISCONNECTED AND REMOVED.
4. EXISTING UNDER FLOOR DUCT TO BE REMOVED.

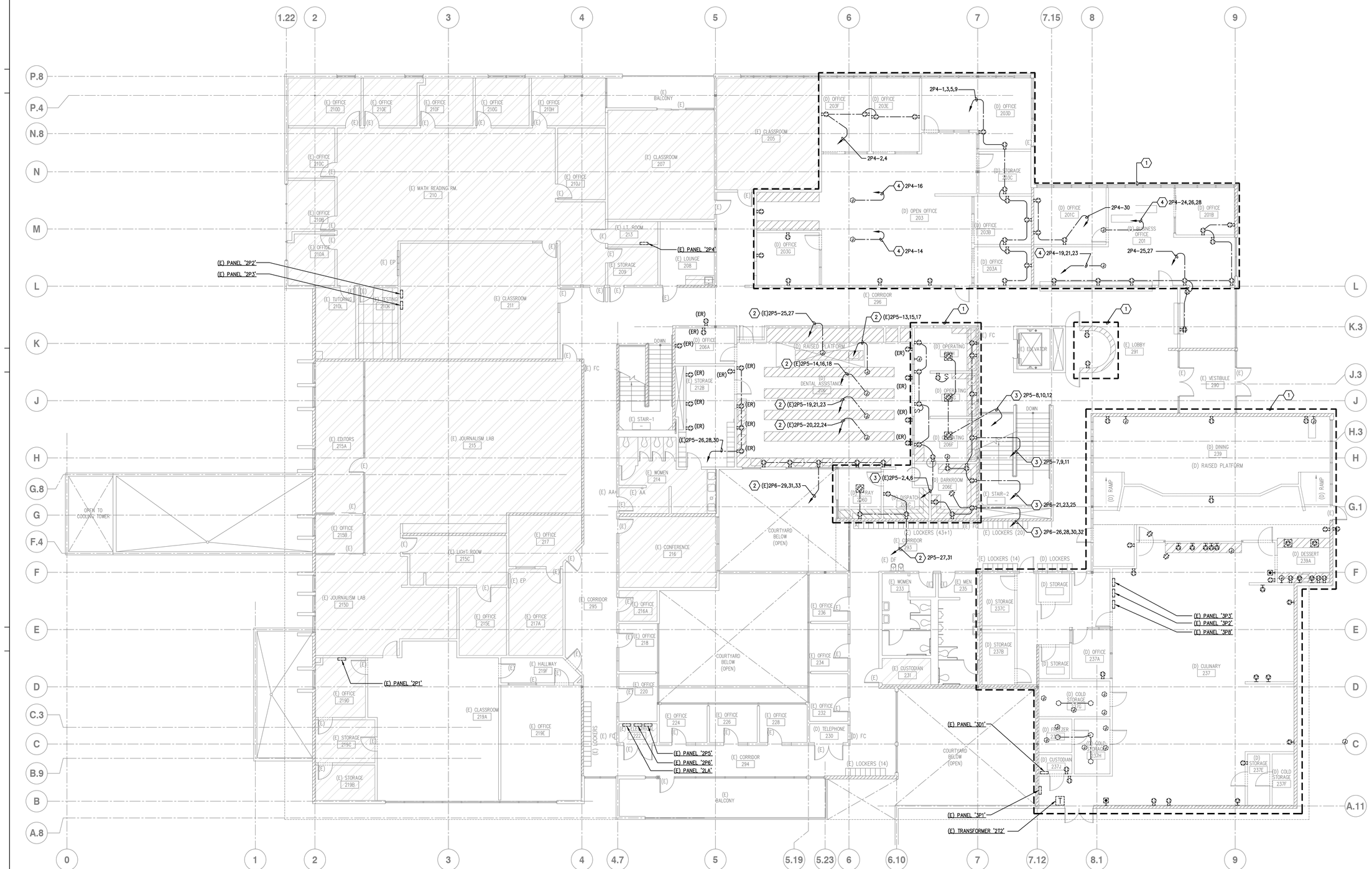

1 ELECTRICAL POWER DEMOLITION PLAN – SECOND FLOOR

SCALE: 1/8" = 1'-0"

N

tBP
architecture
planning
interiors

tBP/Architecture
1777 Oakland Boulevard, Suite 320
Walnut Creek, CA 94596
ph: 925.246.6419

architect

WHM INCORPORATED
Engineering Consultants
1305 School Street
Napa, California 94558
tel (925)376-2302 • Fax (925)376-2904
cool@whminc.com
ts-249

consultant

IDENTIFICATION STAMP
DIV. OF THE STATE ARCHITECT
OFFICE OF REGULATION SERVICES
APPL # 01-
FILE NO. 7-C1
AC ___ FCS ___ SS ___
DATE ___

DIVISION OF THE STATE ARCHITECT
1515 CLAY STREET
OAKLAND, CA94612
ph:(510) 622-3101

agency

C-4008 APPLIED ARTS & ADMIN RENOVATION

2600 MISSION BELL DRIVE, SAN PABLO, CA 94806

CONTRA COSTA COMMUNITY COLLEGE DISTRICT
500 COURT STREET MARTINEZ, CA 94553

owner

tBP project number:	20865.00
file name:	A111_DEMO 1ST.DWG
drawn by: DM	checked by: TLK
date:	APRIL 30, 2019

rev:	date:	description:
	4/30/2019	RECORD SET

THIS DRAWING AND THE DESIGN, DEFINITIONS, IDEAS AND OTHER INFORMATION CONTAINED HEREIN CONSTITUTE UNPUBLISHED WORK OF tBP/ARCHITECTURE AND SHALL REMAIN PROPERTY OF tBP/ARCHITECTURE IN PERPETUITY. NO PART THEREOF SHALL BE REPRODUCED, DISCLOSED, DISTRIBUTED, SOLD, PUBLISHED OR OTHERWISE USED IN ANY WAY WITHOUT THE ADVANCED EXPRESS WRITTEN CONSENT OF tBP/ARCHITECTURE.

drawing title:
ELECTRICAL POWER
DEMO PLAN - 2ND FLOOR

drawing no.:
E122

drawing of

Record Dwgs

04/30/19 1:18:59 PM F:\2016\16-069 CCC ARTS-ADMIN\RECORD SET\16069E122.DWG

GENERAL NOTES

1. ALL EXISTING DEVICES, CONDUIT AND WIRING TO REMAIN, UNLESS OTHERWISE NOTED.

SHEET NOTES

1. EXISTING FATC AND RPS ARE TO BE DISCONNECTED AND REMOVED. RECONNECT EXISTING CIRCUITS PER NEW PLAN.
2. EXISTING FIRE ALARM DEVICES TO BE DISCONNECTED AND REMOVED. DEVICES SHALL NOT BE SALVAGED/STOCKPILED FOR FUTURE USE.

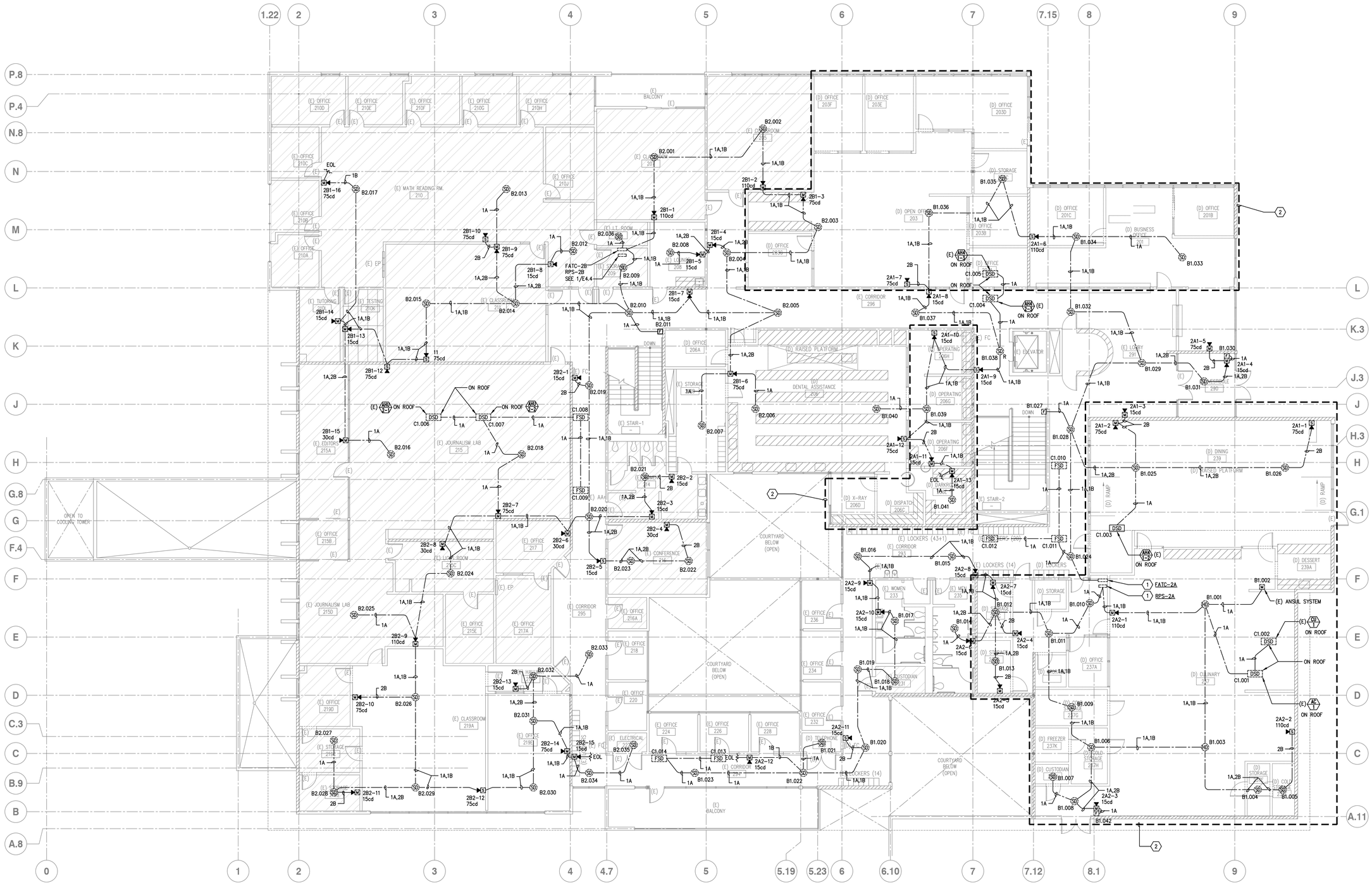

1 ELECTRICAL FIRE ALARM DEMOLITION PLAN – SECOND FLOOR

SCALE: 1/8" = 1'-0"

N

tBP
architecture
planning
interiors

tBP/Architecture
1777 Oakland Boulevard, Suite 320
Walnut Creek, CA 94596
ph: 925.246.6419

architect

WHM INCORPORATED
Engineering Consultants
1505 School Street
Napa, CA 94558
tel (707)226-2002 • fax (707)226-2904
code@whminc.com
ts-249

consultant

IDENTIFICATION STAMP
DIV. OF THE STATE ARCHITECT
OFFICE OF REGULATION SERVICES
APPL # 01-
FILE NO. 7-C1
AC ___ FCS ___ SS ___
DATE ___

DIVISION OF THE STATE ARCHITECT
1515 CLAY STREET
OAKLAND, CA94612
ph:(510) 622-3101

agency

C-4008 APPLIED ARTS & ADMIN RENOVATION

2600 MISSION BELL DRIVE, SAN PABLO, CA 94806

CONTRA COSTA COMMUNITY COLLEGE DISTRICT
500 COURT STREET MARTINEZ, CA 94553

owner

tBP project number:	20865.00
file name:	A111_DEMO 1ST.DWG
drawn by: DM	checked by: TLK
date: APRIL 30, 2019	

rev:	date:	description:
	4/30/2019	RECORD SET

THIS DRAWING AND THE DESIGNS, DEFICTIONS, IDEAS AND OTHER INFORMATION CONTAINED HEREIN, CONSTITUTE UNPUBLISHED WORK OF tBP/ARCHITECTURE AND SHALL REMAIN PROPERTY OF tBP/ARCHITECTURE IN PERPETUITY. NO PART THEREOF SHALL BE REPRODUCED, DISCLOSED, DISTRIBUTED, SOLD, PUBLISHED OR OTHERWISE USED IN ANY WAY WITHOUT THE ADVANCED EXPRESS WRITTEN CONSENT OF tBP/ARCHITECTURE.

drawing title:

ELECTRICAL FIRE ALARM DEMO PLAN - 2ND FLOOR

drawing no.:

E123

drawing of

04/30/19 1:19:02 PM F:\2016\16-069 CCC ARTS-ADMIN\RECORD SET\16069E123.DWG

Record Dwgs

GENERAL NOTES

1. ACCURATE AS-BUILTS ARE NOT AVAILABLE. VERIFY ALL EXISTING CIRCUITS IN FIELD AND REMOVE CIRCUITS TO SOURCE.

SHEET NOTES

1. DISCONNECT AND REMOVE ELECTRICAL CONNECTIONS TO MAU UNIT.
2. DISCONNECT AND REMOVE ELECTRICAL CONNECTIONS TO KITCHEN EXHAUST FAN.
3. DISCONNECT AND REMOVE ELECTRICAL CONNECTIONS TO CONDENSING UNIT.
4. DISCONNECT AND REMOVE ELECTRICAL CONNECTIONS TO 208V, 1ø AC UNIT.
5. DISCONNECT AND REMOVE ELECTRICAL CONNECTIONS TO EXHAUST FAN.

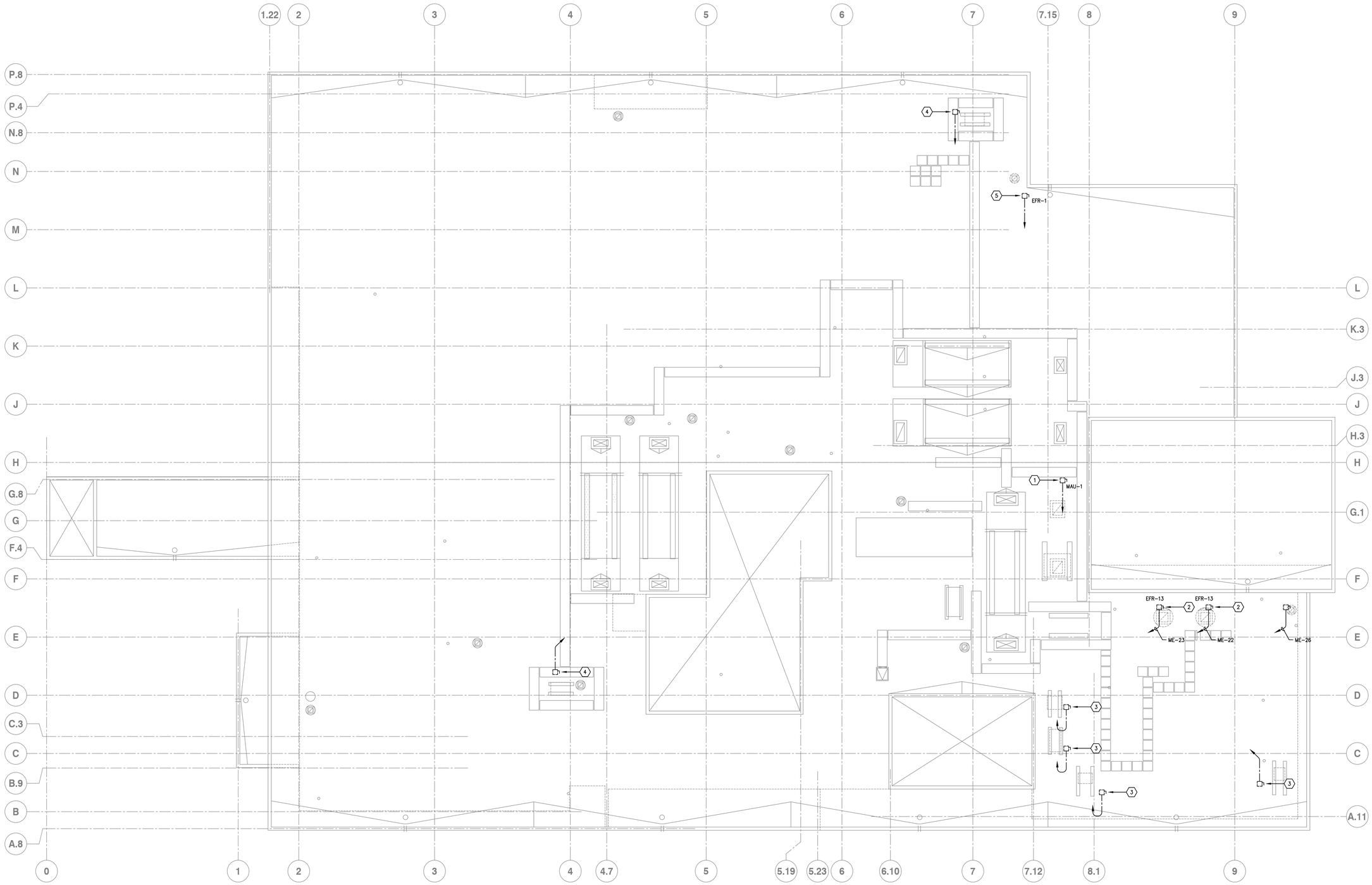

1 ELECTRICAL POWER DEMOLITION PLAN – ROOF

SCALE: 1/8" = 1'-0"

N

tBP
architecture
planning
interiors

tBP/Architecture
1777 Oakland Boulevard, Suite 320
Walnut Creek, CA 94596
ph: 925.246.6419

architect

WHM INCORPORATED
Engineering Consultants
1205 School Street
Moraga, CA 94556
tel (925)376-2202 • Fax (925)376-2904
cool@whmmc.com
ts-249

consultant

IDENTIFICATION STAMP
DIV. OF THE STATE ARCHITECT
OFFICE OF REGULATION SERVICES
APPL # 01-
FILE NO. 7-C1
AC ____ FLS ____ SS ____
DATE ____

DIVISION OF THE STATE ARCHITECT
1515 CLAY STREET
OAKLAND, CA94612
ph:(510) 622-3101

agency

C-4008 APPLIED ARTS & ADMIN RENOVATION

2600 MISSION BELL DRIVE, SAN PABLO, CA 94806

CONTRA COSTA COMMUNITY COLLEGE DISTRICT
500 COURT STREET MARTINEZ, CA 94553

owner

tBP project number: 20865.00
file name: A111_DEMO 1ST.DWG
drawn by: DM checked by: TLK
date: APRIL 30, 2019

rev:	date:	description:
	4/30/2019	RECORD SET

THIS DRAWING AND THE DESIGNS, DEPICTIONS, IDEAS AND OTHER INFORMATION CONTAINED HEREIN CONSTITUTE UNPUBLISHED WORK OF tBP/ARCHITECTURE AND SHALL REMAIN PROPERTY OF tBP/ARCHITECTURE IN PERPETUITY. NO PART THEREOF SHALL BE REPRODUCED, DISCLOSED, DISTRIBUTED, SOLD, PUBLISHED OR OTHERWISE USED IN ANY WAY WITHOUT THE ADVANCED EXPRESS WRITTEN CONSENT OF tBP/ARCHITECTURE.

drawing title:
ELECTRICAL POWER DEMO PLAN - ROOF

drawing no.:
E131

drawing of

04/30/19 1:19:04 PM F:\2016\16-069 CCC ARTS-ADMIN\RECORD SET\16069E131.DWG

Record Dwgs

SHEET NOTES

1. RECONNECT EXISTING LIGHT FIXTURES TO EXISTING CIRCUIT WITH NEW CONDUIT AND WIRING.
2. CONNECT NEW EXIT SIGN TO EXISTING HOT LEG.
3. CONNECT NEW LIGHT FIXTURES TO EXISTING CIRCUIT.
4. WHITEBOARD FIXTURE TO HAVE SEPARATE LIGHTING CONTROL.
5. REPLACE EXISTING FIXTURE WITH NEW. EXTEND CONDUITS AND WIRING TO NEW LOCATION DUE TO INCREASE DEPTH OF CEILING.
6. REPLACE EXISTING SURFACE MOUNT SWITCH WITH NEW KEYED SWITCH AT +48" TO TOP OF BOX. CONNECT TO LIGHT FIXTURE.

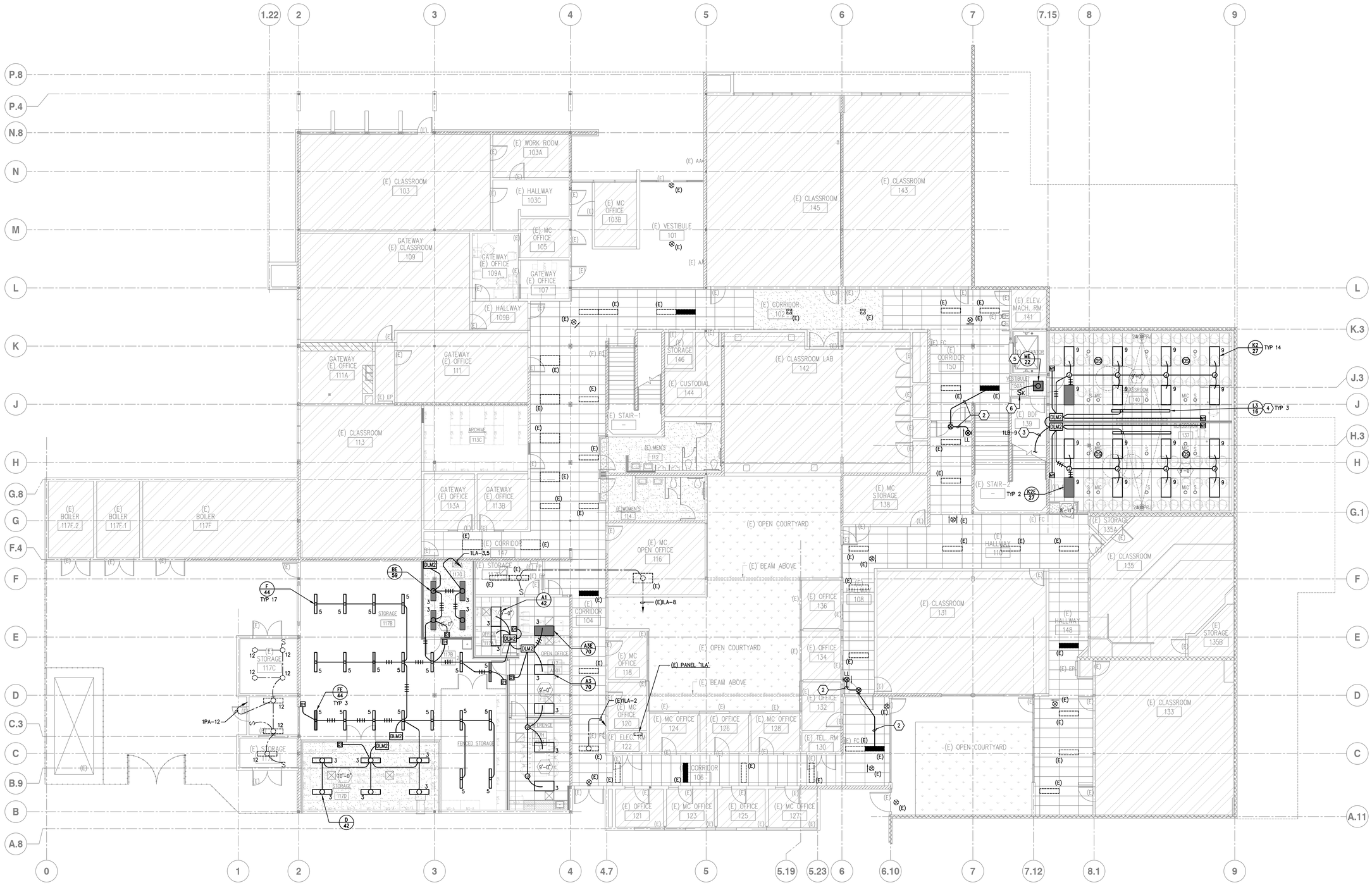

1 ELECTRICAL LIGHTING PLAN – FIRST FLOOR

SCALE: 1/8" = 1'-0"

tBP/Architecture
1777 Oakland Boulevard, Suite 320
Walnut Creek, CA 94596
ph: 925.246.6419

architect

WHM INCORPORATED
Engineering Consultants
1205 School Street
Moraga, CA 94556
tel (925)376-2302 • Fax (925)376-2904
cool@whminc.com

consultant

IDENTIFICATION STAMP
DIV. OF THE STATE ARCHITECT
OFFICE OF REGULATION SERVICES
APPL # 01-
FILE NO. 7-C1
AC ___ FS ___ SS ___
DATE

DIVISION OF THE STATE ARCHITECT
1515 CLAY STREET
OAKLAND, CA94612
ph:(510) 622-3101

agency

C-4008 APPLIED ARTS & ADMIN RENOVATION

2600 MISSION BELL DRIVE, SAN PABLO, CA 94806

CONTRA COSTA COMMUNITY COLLEGE DISTRICT
500 COURT STREET MARTINEZ, CA 94553

owner

tBP project number:	20865.00
file name:	A111_DEMO 1ST.DWG
drawn by: DM	checked by: TLK
date: APRIL 30, 2019	

rev:	date:	description:
	4/30/2019	RECORD SET

THIS DRAWING AND THE DESIGNS, DESCRIPTIONS, IDEAS AND IDEAS, INFORMATION CONTAINED HEREIN CONSTITUTE UNPUBLISHED WORK OF tBP/ARCHITECTURE AND SHALL REMAIN PROPERTY OF tBP/ARCHITECTURE IN PERPETUITY. NO PART THEREOF SHALL BE REPRODUCED, DISCLOSED, DISTRIBUTED, SOLD, PUBLISHED OR OTHERWISE USED IN ANY WAY WITHOUT THE ADVANCED EXPRESS WRITTEN CONSENT OF tBP/ARCHITECTURE.

drawing title:
ELECTRICAL LIGHTING PLAN - 1ST FLOOR

drawing no.:
E211

drawing of

Record Dwgs

04/30/19 1:19:07 PM F:\2016\16-069 CCC ARTS-ADMIN\RECORD SET\160696E211.DWG

SHEET NOTES

1. RECONNECT RELOCATED LIGHT SWITCH TO EXISTING FIXTURES.
2. RECONNECT EXISTING LIGHTING CIRCUITS IN AREA TO NEW PANEL.
3. LIGHT FIXTURE TO BE SEPARATELY CONTROLLED TO ALLOW FOR DIMMING/ON/OFF FOR TEACHING WALL.
4. CONNECT NEW LIGHT FIXTURES TO EXISTING LIGHTING CIRCUIT.
5. PROVIDE TEMPORARY PANEL '2LB' IN CORRIDOR UNTIL NEW PANEL IS INSTALLED IN NEW WALL PER NOTE 2.
6. CONNECT NEW FIXTURE(S) TO CORRIDOR CIRCUITRY AND CONTROLS WITH NEW CONDUIT AND WIRING.
7. CONNECT TEACHING WALL FIXTURE TO EXISTING CLASSROOM LIGHTING CIRCUIT.

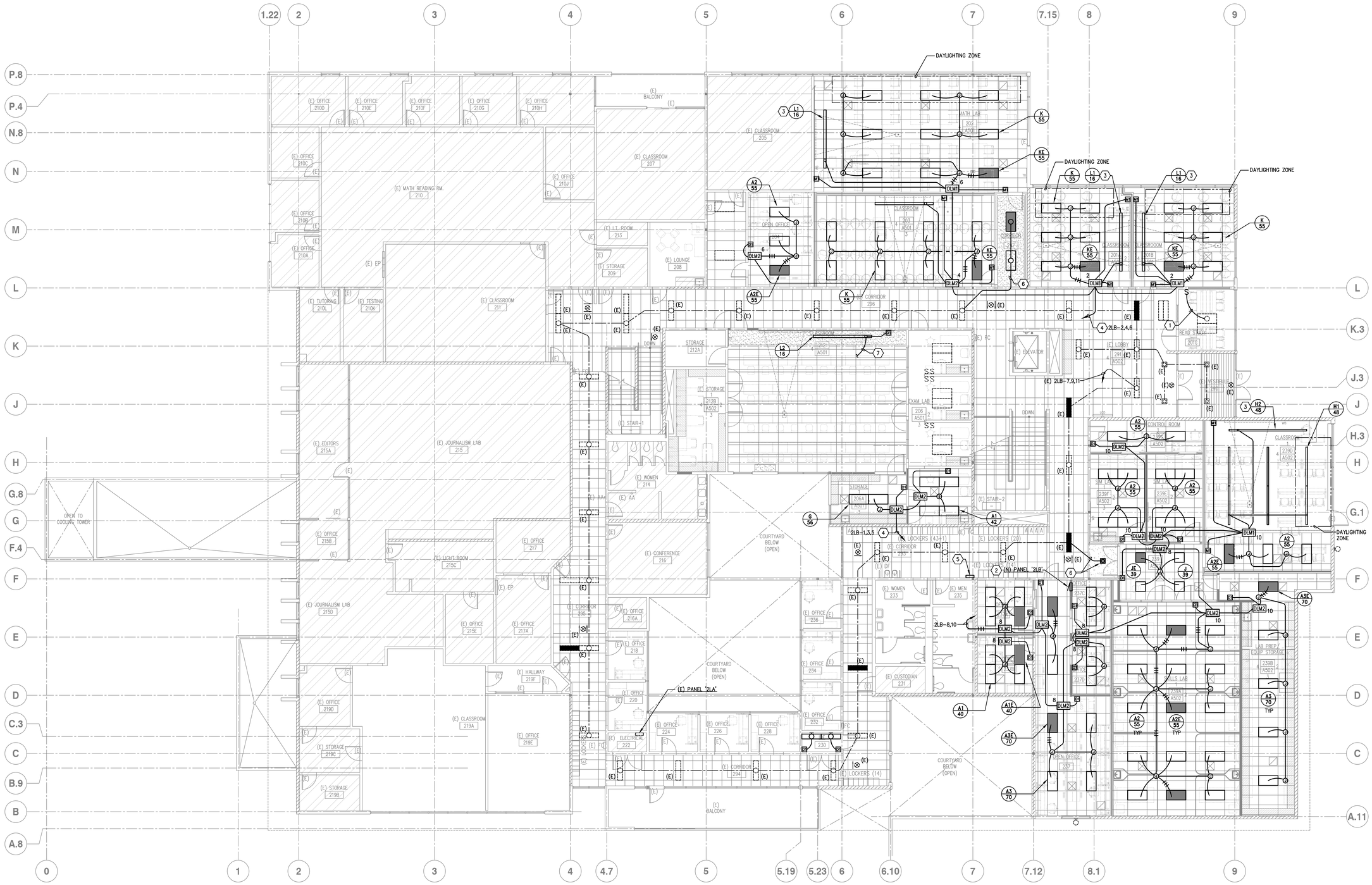

1 ELECTRICAL LIGHTING PLAN – SECOND FLOOR

SCALE: 1/8" = 1'-0"

N

tBP
architecture
planning
interiors

tBP/Architecture
1777 Oakland Boulevard, Suite 320
Walnut Creek, CA 94596
ph: 925.246.6419

architect

WHM INCORPORATED
Engineering Consultants
1505 School Street
Napa, California 94558
tel (707)226-2302 • fax (707)226-2904
cad@whmincc.com
ts-249

consultant

IDENTIFICATION STAMP
DIV. OF THE STATE ARCHITECT
OFFICE OF REGULATION SERVICES
APPL # 01-
FILE NO. 7-C1
AC ___ FS ___ SS ___
DATE

DIVISION OF THE STATE ARCHITECT
1515 CLAY STREET
OAKLAND, CA94612
ph:(510) 622-3101

agency

C-4008 APPLIED ARTS & ADMIN RENOVATION

2600 MISSION BELL DRIVE, SAN PABLO, CA 94806

CONTRA COSTA COMMUNITY COLLEGE DISTRICT
500 COURT STREET MARTINEZ, CA 94553

owner

tBP project number:	20865.00
file name:	A111_DEMO 1ST.DWG
drawn by:	DM
checked by:	TLK
date:	APRIL 30, 2019

rev:	date:	description:
	4/30/2019	RECORD SET

THIS DRAWING AND THE DESIGNS, DEPICTIONS, IDEAS AND OTHER INFORMATION CONTAINED HEREIN CONSTITUTE UNPUBLISHED WORK OF tBP/ARCHITECTURE AND SHALL REMAIN PROPERTY OF tBP/ARCHITECTURE IN PERPETUITY. NO PART THEREOF SHALL BE REPRODUCED, DISCLOSED, DISTRIBUTED, SOLD, PUBLISHED OR OTHERWISE USED IN ANY WAY WITHOUT THE ADVANCED EXPRESS WRITTEN CONSENT OF tBP/ARCHITECTURE.

drawing title:
ELECTRICAL LIGHTING PLAN - 2ND FLOOR

drawing no.:
E221

drawing of

04/30/19 1:19:10 PM F:\2016\16-069 CCC ARTS-ADMIN\RECORD SET\16069E221.DWG

Record Dwgs

SHEET NOTES

1. PROVIDE (1) DEDICATED, 120V, NON-SWITCHED QUAD RECEPTACLE WITH DEDICATED CIRCUIT ABOVE EACH 2 POST RELAY RACK AND (2) 220V, 30A TWISTLOCK RECEPTACLES (L14-30R) ABOVE THE 4 POST RACK. PROVIDE A MINIMUM OF 24" OF FLEX CONDUIT TO ATTACH POWER RECEPTACLES TO THE EQUIPMENT RACKS TO ALLOW FOR EXPANSION/DEFLECTION DURING A SEISMIC EVENT. (3 RACKS IN ROOM). PROVIDE ONE DUPLEX ELECTRICAL CONVENIENCE RECEPTACLE EVERY 6'-0" AROUND THE ROOM, MOUNTED AT 18" ABOVE FINISHED FLOOR.
2. PROVIDE 120V POWER FOR ELECTRIFIED DOORS. COORDINATE REQUIREMENTS WITH DOOR MANUFACTURER. CONNECT TO SPARE BREAKER IN PANEL "1PE".
3. PROVIDE 120V POWER FOR ELECTRIFIED DOORS. COORDINATE REQUIREMENTS WITH DOOR MANUFACTURER. CONNECT TO SPARE BREAKER IN PANEL "1PD".
4. PROVIDE ISOLATED NON-EQUIPMENT GROUND IN ADDITION TO NORMAL GROUND TO RECEPTACLES ON THESE CIRCUITS.
5. PROVIDE 120V POWER FOR CARD READER. COORDINATE EXACT REQUIREMENTS WITH SHEET T5.22.
6. PROVIDE LEGRAND RFB4 POWER/DATA FLOOR BOX AT TEACHER LOCATIONS.
7. PROVIDE PROJECTOR POWER. COORDINATE EXACT LOCATION PRIOR TO ROUGH-IN.
8. PROVIDE ISOLATED NON-EQUIPMENT GROUND IN ADDITION TO NORMAL GROUND TO RECEPTACLES ON THESE CIRCUITS.
9. PROVIDE 120V POWER FOR POWER ASSISTED DOOR. COORDINATE REQUIREMENTS WITH MANUFACTURER.
10. PROVIDE 120V POWER FOR CARD READER. COORDINATE EXACT REQUIREMENTS WITH SHEET T5.22.
11. CONNECT NEW GFI RECEPTACLE AND DOOR ASSIST POWER TO EXISTING CIRCUITRY WITH NEW CONDUIT AND WIRE.
12. RECONNECT 120V POWER TO RELOCATED FIRE ALARM REMOTE POWER SUPPLY WITH NEW CONDUIT AND WIRE.

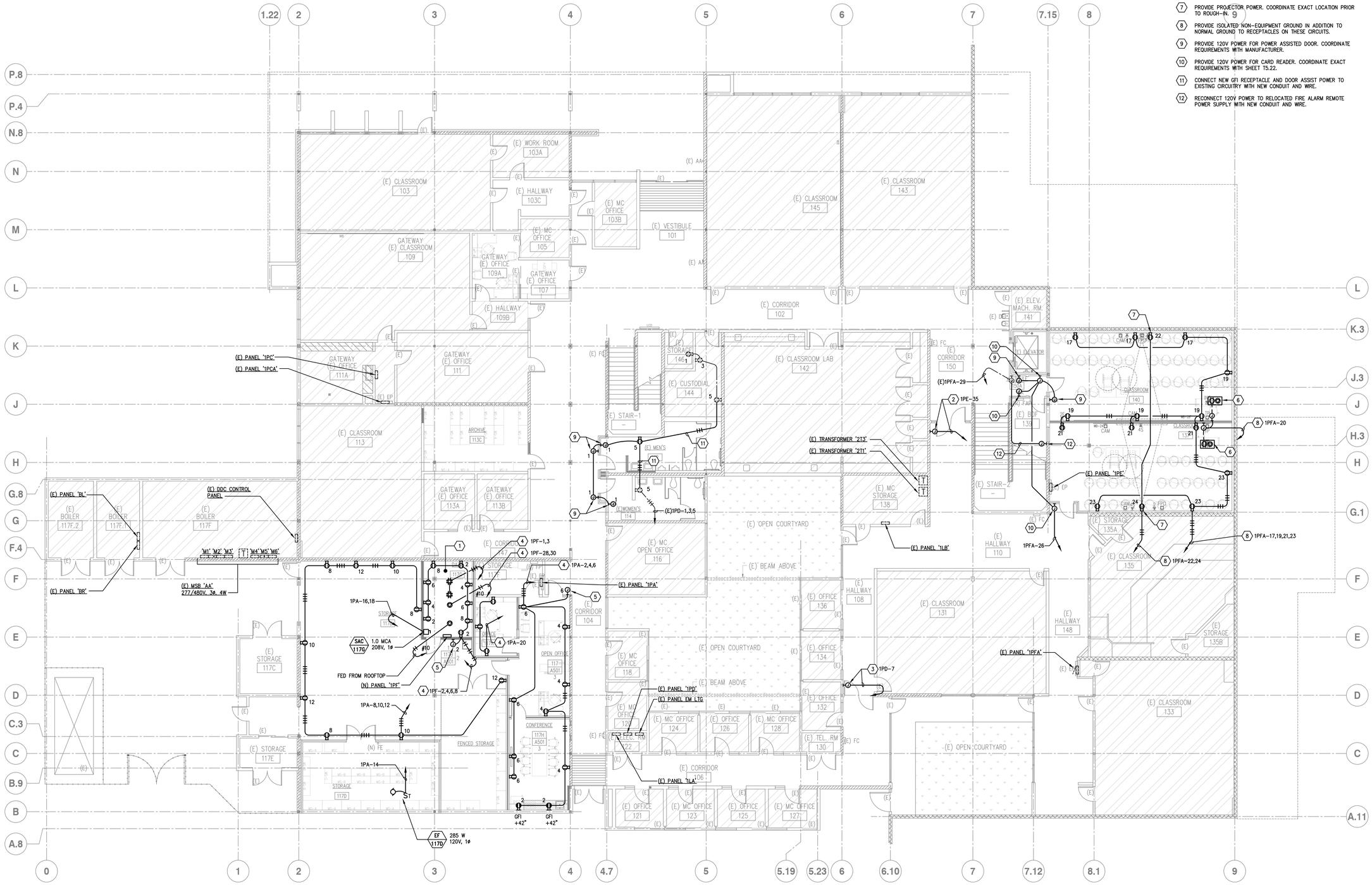

1 ELECTRICAL POWER PLAN – FIRST FLOOR

SCALE: 1/8" = 1'-0"

tBP architecture planning interiors

tBP/Architecture
1777 Oakland Boulevard, Suite 320
Walnut Creek, CA 94596
ph: 925.246.6419

architect

WHM INCORPORATED
Engineering Consultants
1305 School Street
Napa, California 94558
tel (707)226-2302 • fax (707)226-2904
cool@whminc.com
ts-249

consultant

IDENTIFICATION STAMP
DIV. OF THE STATE ARCHITECT
OFFICE OF REGULATION SERVICES
APPL # 01-
FILE NO. 7-C1
AC ___ FLS ___ SS ___
DATE

DIVISION OF THE STATE ARCHITECT
1515 CLAY STREET
OAKLAND, CA94612
ph:(510) 622-3101

agency

C-4008 APPLIED ARTS & ADMIN RENOVATION

2600 MISSION BELL DRIVE, SAN PABLO, CA 94806

CONTRA COSTA COMMUNITY COLLEGE DISTRICT
500 COURT STREET MARTINEZ, CA 94553

owner

tBP project number:	20865.00
file name:	A111_DEMO 1ST.DWG
drawn by: DM	checked by: TLK
date: APRIL 30, 2019	

rev:	date:	description:
	4/30/2019	RECORD SET

THIS DRAWING AND THE DETAILS, DEPICTIONS, IDEAS AND DESIGNS INFORMATION CONTAINED HEREIN CONSTITUTE UNPUBLISHED WORK OF tBP/ARCHITECTURE AND SHALL REMAIN PROPERTY OF tBP/ARCHITECTURE IN PERPETUITY. NO PART THEREOF SHALL BE REPRODUCED, DISCLOSED, DISTRIBUTED, SOLD, PUBLISHED OR OTHERWISE USED IN ANY WAY WITHOUT THE ADVANCED EXPRESS WRITTEN CONSENT OF tBP/ARCHITECTURE.

drawing title:
ELECTRICAL POWER PLAN - 1ST FLOOR

drawing no.:
E311

drawing of

04/30/19 1:19:13 PM F:\2016\16-069 CCC ARTS-ADMIN\RECORD SET\160696311.DWG

Record Dwgs

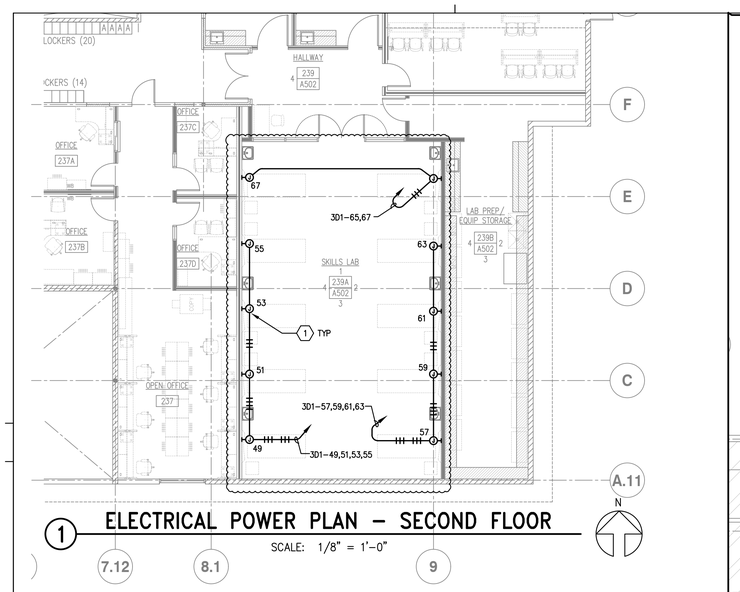

1 ELECTRICAL POWER PLAN – SECOND FLOOR

SCALE: 1/8" = 1'-0"

GENERAL NOTES

1. PROVIDE ELECTRICAL CONNECTIONS FOR HVAC UNITS.

SHEET NOTES

1. PROVIDE POWER FOR HEADWALL.
2. NEW TRANSFORMER MOUNTED ABOVE.
3. PROVIDE DUPLEX RECEPTACLES AT 3'-0" AND 5'-0" AFF. SEE SHEET A501.
4. PROVIDE DIVIDED RACEWAY UNDER WINDOWS FOR POWER AND DATA.
5. NOT USED.
6. PROVIDE POWER FOR MECHOSHADES.
7. PROVIDE POWER FOR BED LOCATOR.
8. RECONNECT EXISTING RECEPTACLES TO NEW CIRCUIT.
9. PROVIDE LEGRAND RFB4 POWER/DATA FLOOR BOX AT TEACHER LOCATIONS.
10. PROVIDE (2) L14-30R TWISTLOCKS AND (1) 120V, 20A QUAD AT BACK OF DATA RACKS.
11. CONNECT TO EXISTING RECEPTACLE CIRCUIT FROM DEMOLITION.
12. PROVIDE PROJECTOR POWER. COORDINATE EXACT LOCATION PRIOR TO ROUGH-IN.
13. PROVIDE ISOLATED NON-EQUIPMENT GROUND IN ADDITION TO NORMAL GROUND TO RECEPTACLES ON THESE CIRCUITS.
14. COORDINATE EXACT HEIGHT PRIOR TO ROUGH-IN.
15. PROVIDE 120V POWER FOR CARD READER. COORDINATE EXACT REQUIREMENTS WITH SHEET T5.22.

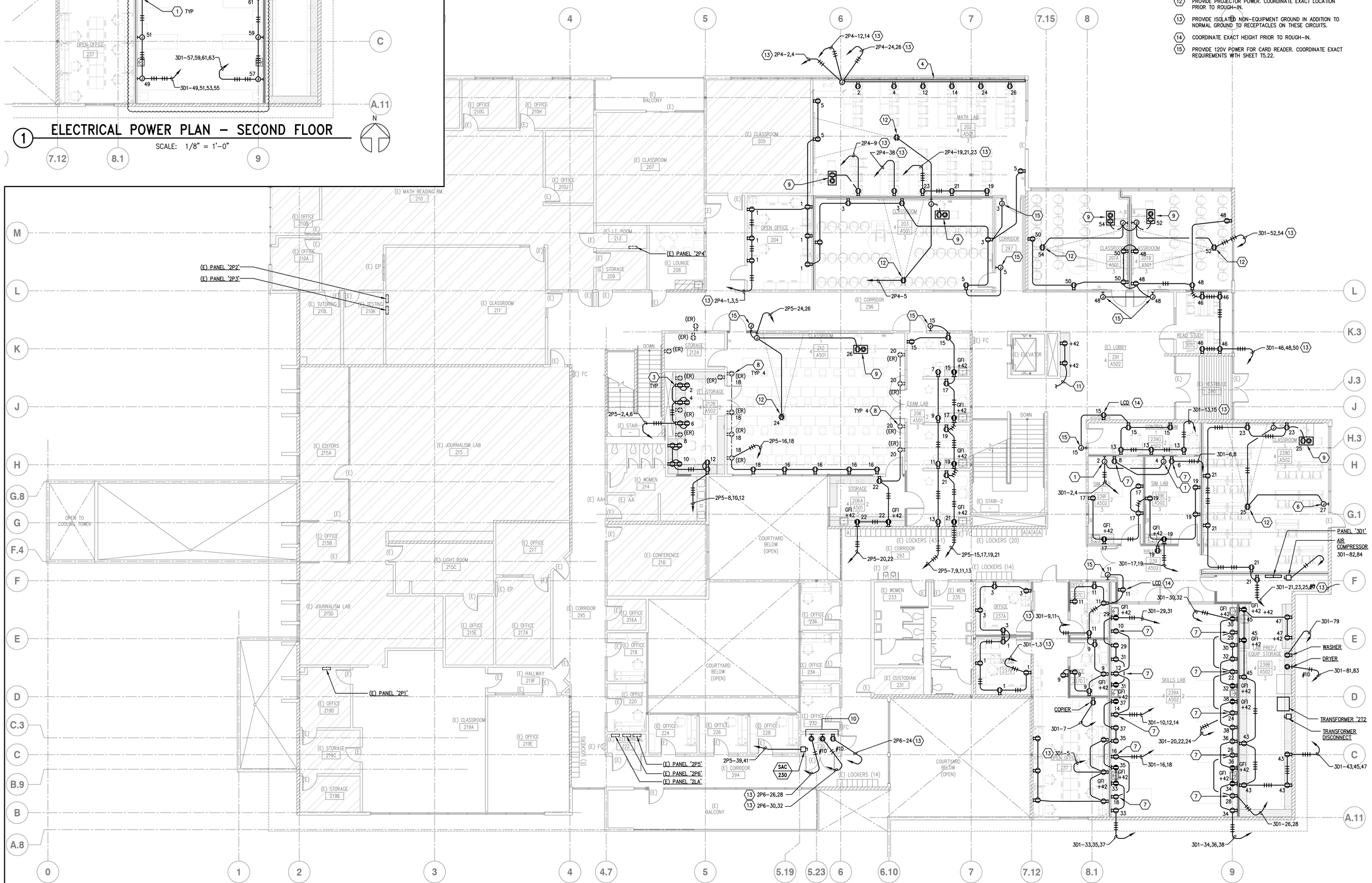

1 ELECTRICAL POWER PLAN – SECOND FLOOR

SCALE: 1/8" = 1'-0"

tBP
architecture
planning
interiors

tBP/Architecture
1777 Oakland Boulevard, Suite 320
Walnut Creek, CA 94596
ph: 925.246.6419

architect

WHM INCORPORATED
Engineering Consultants
1505 School Street
Moraga, CA 94556
tel (925)376-2302 • fax (925)376-2904
cool@whminc.com
ts-249

consultant

IDENTIFICATION STAMP
DIV. OF THE STATE ARCHITECT
OFFICE OF REGULATION SERVICES
APPL # 01-
FILE NO. 7-C1
AC ___ FS ___ SS ___
DATE ___

DIVISION OF THE STATE ARCHITECT
1515 CLAY STREET
OAKLAND, CA94612
ph:(510) 622-3101

agency

C-4008 APPLIED ARTS & ADMIN RENOVATION

2600 MISSION BELL DRIVE, SAN PABLO, CA 94806

CONTRA COSTA COMMUNITY COLLEGE DISTRICT
500 COURT STREET MARTINEZ, CA 94553

owner

tBP project number:	20865.00
file name:	A111_DEMO 1ST.DWG
drawn by: DM	checked by: TLK
date: APRIL 30, 2019	

rev:	date:	description:
	4/30/2019	RECORD SET

THIS DRAWING AND THE DESIGNS, DEPICTIONS, IDEAS AND OTHER INFORMATION CONTAINED HEREIN CONSTITUTE UNPUBLISHED WORK OF tBP/ARCHITECTURE AND SHALL REMAIN PROPERTY OF tBP/ARCHITECTURE IN PERPETUITY. NO PART THEREOF SHALL BE REPRODUCED, DISCLOSED, DISTRIBUTED, SOLD, PUBLISHED OR OTHERWISE USED IN ANY WAY WITHOUT THE ADVANCED EXPRESS WRITTEN CONSENT OF tBP/ARCHITECTURE.

drawing title:
ELECTRICAL POWER PLAN - 2ND FLOOR

drawing no.:
E321

drawing of

04/30/19 1:19:18 PM F:\2018\16-069 CCC ARTS-ADMIN\RECORD SET\16069E321.DWG

Record Dwgs

SHEET NOTES

1. USE EXISTING RACEWAY TO BREAKER LOCATION IN BOILER ROOM 117F. EXTEND AS REQUIRED FROM EXISTING ROOFTOP POINT OF CONNECTION TO NEW UNIT. PULL IN NEW 3#10 PLUS GROUND FROM UNIT TO PANEL.
2. REPLACE EXISTING BREAKER IN BOILER ROOM WITH 15A/3P. PULL IN NEW 3#10 PLUS GROUND FROM UNIT TO PANEL.
3. REPLACE EXISTING BREAKER IN BOILER ROOM WITH 20A/3P. PULL IN NEW 3#10 PLUS GROUND FROM UNIT TO PANEL.

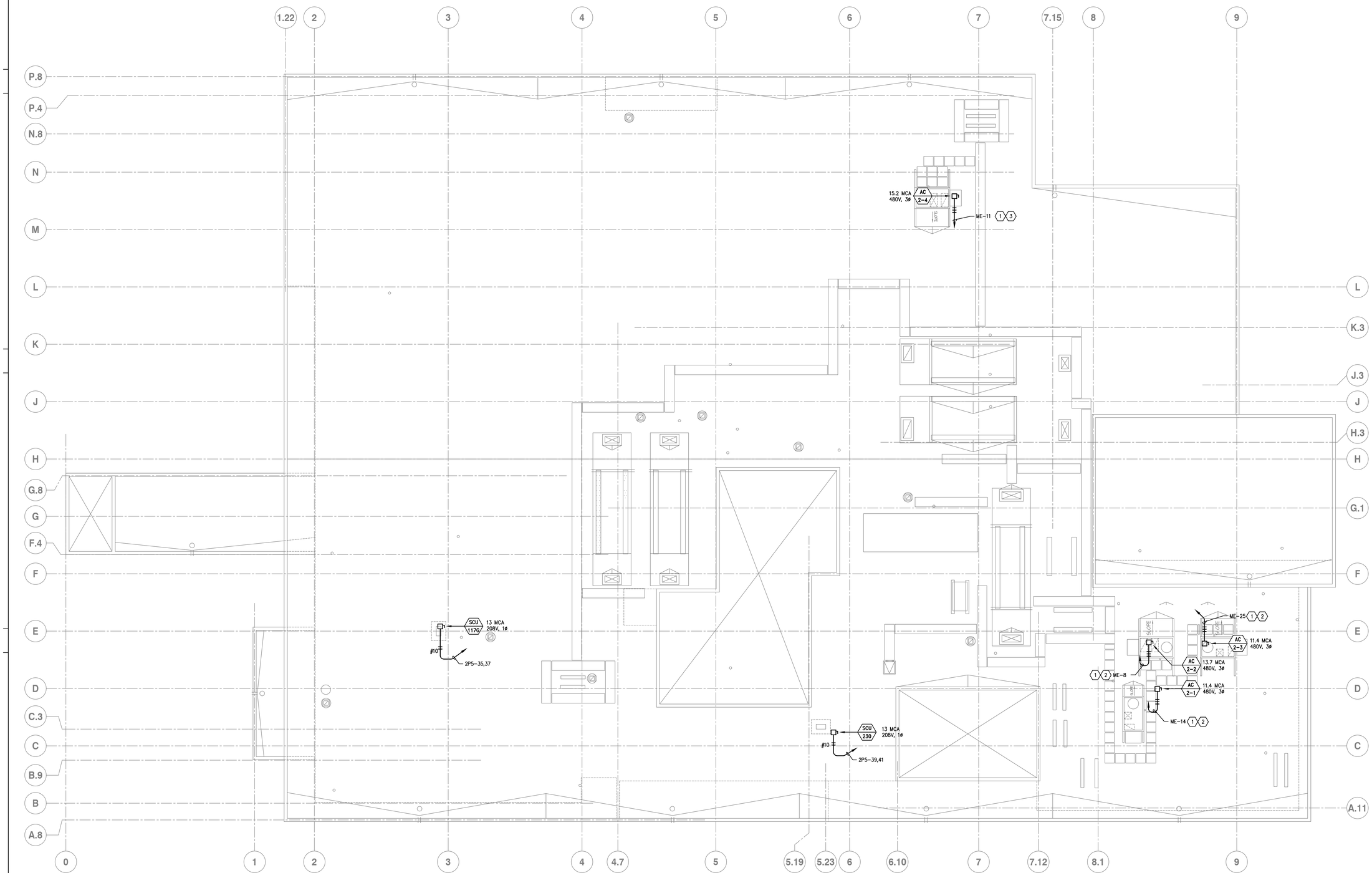

1 ELECTRICAL POWER PLAN – ROOF

SCALE: 1/8" = 1'-0"

N

tBP
architecture
planning
interiors

tBP/Architecture
1777 Oakland Boulevard, Suite 320
Walnut Creek, CA 94596
ph: 925.246.6419

architect

WHM INCORPORATED
Engineering Consultants
1205 School Street
Moraga, CA 94556
tel (925)376-2202 • Fax (925)376-2904
cool@whmirc.com
ts-249

consultant

IDENTIFICATION STAMP
DIV. OF THE STATE ARCHITECT
OFFICE OF REGULATION SERVICES
APPL # 01-
FILE NO. 7-C1
AC ___ FCS ___ SS ___
DATE ___

DIVISION OF THE STATE ARCHITECT
1515 CLAY STREET
OAKLAND, CA94612
ph:(510) 622-3101

agency

C-4008 APPLIED ARTS & ADMIN RENOVATION

2600 MISSION BELL DRIVE, SAN PABLO, CA 94806

CONTRA COSTA COMMUNITY COLLEGE DISTRICT
500 COURT STREET MARTINEZ, CA 94553

owner

tBP project number:	20865.00
file name:	A111_DEMO 1ST.DWG
drawn by: DM	checked by: TLK
date: APRIL 30, 2019	

rev:	date:	description:
	4/30/2019	RECORD SET

THIS DRAWING AND THE DESIGNS, DEPICTIONS, IDEAS AND OTHER INFORMATION CONTAINED HEREIN CONSTITUTE UNPUBLISHED WORK OF tBP/ARCHITECTURE AND SHALL REMAIN PROPERTY OF tBP/ARCHITECTURE IN PERPETUITY. NO PART THEREOF SHALL BE REPRODUCED, DISCLOSED, DISTRIBUTED, SOLD, PUBLISHED OR OTHERWISE USED IN ANY WAY WITHOUT THE ADVANCED EXPRESS WRITTEN CONSENT OF tBP/ARCHITECTURE.

drawing title:
ELECTRICAL POWER PLAN - ROOF

drawing no.:
E331

drawing of

04/30/19 1:19:20 PM F:\2016\16-069 CCC ARTS-ADMIN\RECORD SET\16069E331.DWG

Record Dwgs

SHEET NOTES

1. RECONNECT EXISTING FIRE ALARM DEVICE WITH NEW CONDUIT AND WIRING.
2. RECONNECT HORN/STROBE CIRCUIT WITH NEW 1B CABLE PER RISER DIAGRAM.
3. CONNECT NEW DEVICE WITH NEW CONDUIT AND WIRE.

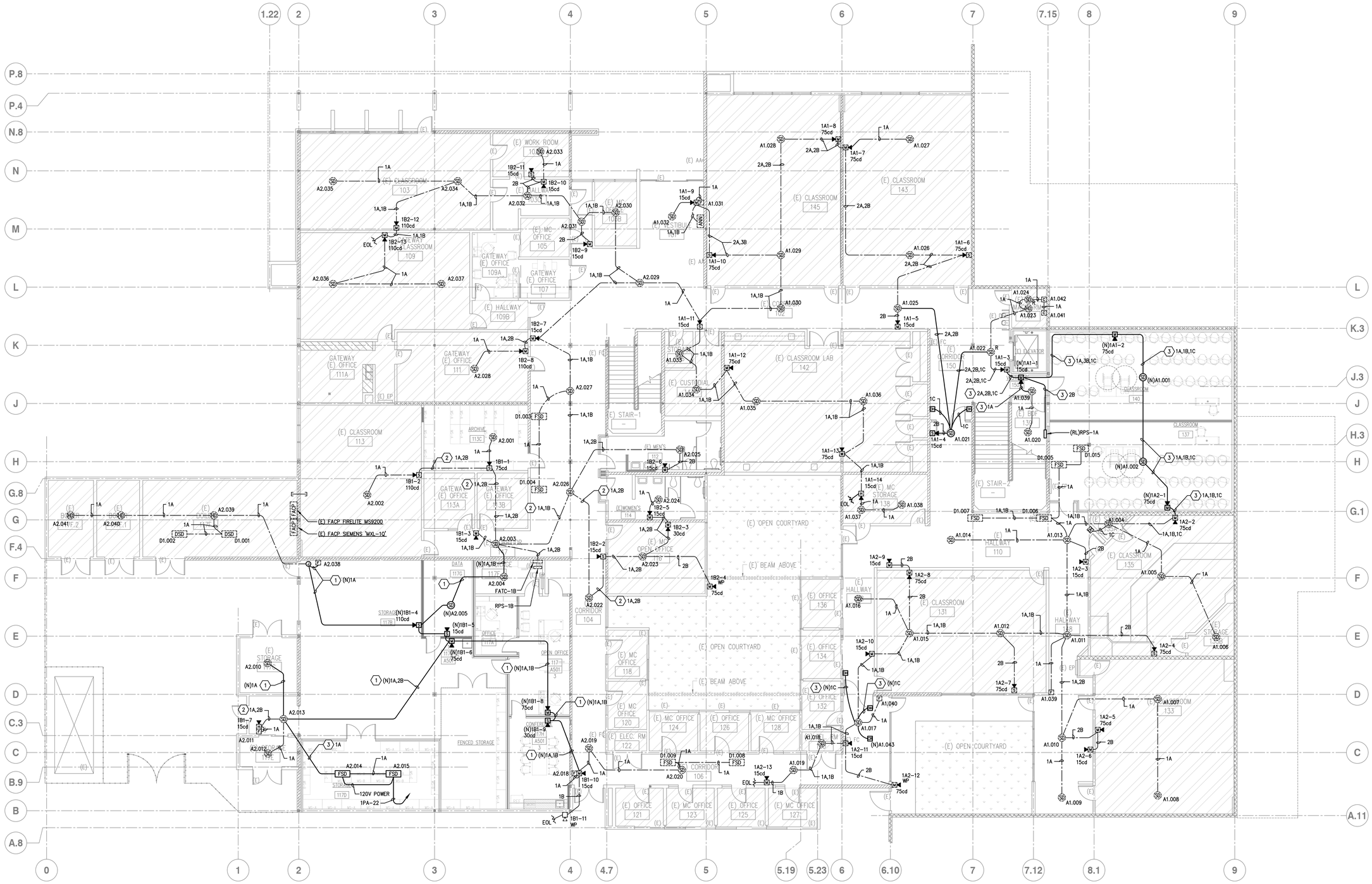

1 ELECTRICAL FIRE ALARM PLAN – FIRST FLOOR

SCALE: 1/8" = 1'-0"

N

tBP/Architecture
1777 Oakland Boulevard, Suite 320
Walnut Creek, CA 94596
ph: 925.246.6419

architect

WHM INCORPORATED
Engineering Consultants
1205 School Street
Napa, California 94559
tel (707)226-2202 • fax (707)226-2904
code@whmincc.com

consultant

IDENTIFICATION STAMP
DIV. OF THE STATE ARCHITECT
OFFICE OF REGULATION SERVICES
APPL # 01-
FILE NO. 7-C1
AC ___ FS ___ SS ___
DATE

DIVISION OF THE STATE ARCHITECT
1515 CLAY STREET
OAKLAND, CA94612
ph:(510) 622-3101

agency

C-4008 APPLIED ARTS & ADMIN RENOVATION

2600 MISSION BELL DRIVE, SAN PABLO, CA 94806

CONTRA COSTA COMMUNITY COLLEGE DISTRICT
500 COURT STREET MARTINEZ, CA 94553

owner

tBP project number:	20865.00
file name:	A111_DEMO 1ST.DWG
drawn by: DM	checked by: TLK
date: APRIL 30, 2019	

rev:	date:	description:
	4/30/2019	RECORD SET

ALL DESIGNS AND INFORMATION, DRAWINGS, REPRESENTATIONS, IDEAS AND OTHER INFORMATION CONTAINED HEREIN CONSTITUTE UNPUBLISHED WORK OF tBP/ARCHITECTURE AND SHALL REMAIN PROPERTY OF tBP/ARCHITECTURE IN PERPETUITY. NO PART THEREOF SHALL BE REPRODUCED, DISCLOSED, DISTRIBUTED, SOLD, PUBLISHED OR OTHERWISE USED IN ANY WAY WITHOUT THE ADVANCED EXPRESS WRITTEN CONSENT OF tBP/ARCHITECTURE.

drawing title:
ELECTRICAL FIRE ALARM PLAN - 1ST FLOOR

drawing no.:
E411

drawing of

04/30/19 1:19:23 PM F:\2016\16-069 CCC ARTS-ADMIN\RECORD SET\16069E411.DWG

Record Dwgs

GENERAL NOTES

1. ALL FIRE/SMOKE DAMPERS SHALL BE CONNECTED TO THE FIRE ALARM SYSTEM. CONTRACTOR TO PROVIDE SHOP DRAWINGS FOR REVIEW AND APPROVAL.

SHEET NOTES

1. CONNECT EXISTING FIRE ALARM CIRCUITS TO NEW RPS AND FATC WITH NEW CONDUIT AND CABLES..
2. RECONNECT EXISTING FIRE ALARM DEVICE WITH NEW CONDUIT AND WIRING.
3. CONNECT NEW FIRE ALARM CIRCUIT TO NEW RPS WITH NEW CONDUIT AND CABLE.
4. RECONNECT EXISTING DEVICE(S) WITH NEW CABLE IN EXISTING CONDUIT.
5. PROVIDE CONTROL RELAY AT FIRE SMOKE DAMPER.
6. PROVIDE 120V POWER TO FIRE SMOKE DAMPER.
7. CONNECT NEW CIRCUIT TO EXISTING RPS-2B.

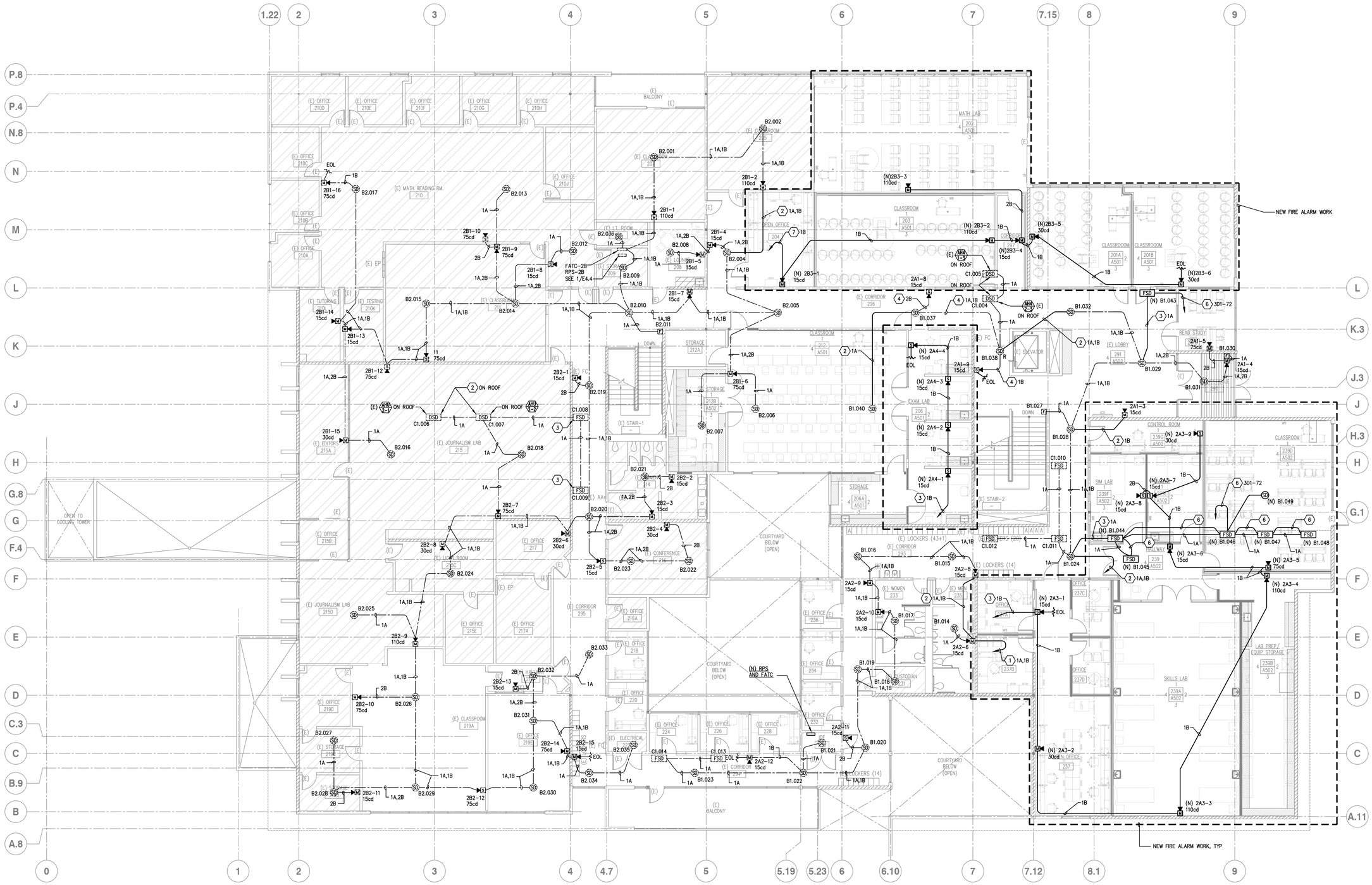

1 ELECTRICAL FIRE ALARM PLAN – SECOND FLOOR

SCALE: 1/8" = 1'-0"

tBP
architecture
planning
urban design
interiors

tBP/Architecture
1777 Oakland Boulevard, Suite 320
Walnut Creek, CA 94596
ph: 925.246.6419

architect

WHM INCORPORATED
Engineering Consultants
1205 School Street
St. Louis, MO 63133
tel (636)376-2002 • fax (636)376-2904
cod@whminc.com
ts-249

consultant

IDENTIFICATION STAMP
DIV. OF THE STATE ARCHITECT
OFFICE OF REGULATION SERVICES
APPL # 01-
FILE NO. 7-C1
AC ___ FCS ___ SS ___
DATE ___

DIVISION OF THE STATE ARCHITECT
1515 CLAY STREET
OAKLAND, CA94612
ph:(510) 622-3101

agency

C-4008 APPLIED ARTS & ADMIN RENOVATION

2600 MISSION BELL DRIVE, SAN PABLO, CA 94806

CONTRA COSTA COMMUNITY COLLEGE DISTRICT
500 COURT STREET MARTINEZ, CA 94553

owner

tBP project number:	20865.00
file name:	A111_DEMO 1ST.DWG
drawn by:	DM
checked by:	TLK
date:	APRIL 30, 2019

rev:	date:	description:
	4/30/2019	RECORD SET

THIS DRAWING AND THE DESIGNS, DEPICTIONS, IDEAS AND OTHER INFORMATION CONTAINED HEREIN, CONSTITUTE UNPUBLISHED WORK OF tBP/ARCHITECTURE AND SHALL REMAIN PROPERTY OF tBP/ARCHITECTURE IN PERPETUITY. NO PART THEREOF SHALL BE REPRODUCED, DISCLOSED, DISTRIBUTED, SOLD, PUBLISHED OR OTHERWISE USED IN ANY WAY WITHOUT THE ADVANCED EXPRESS WRITTEN CONSENT OF tBP/ARCHITECTURE.

drawing title:

ELECTRICAL FIRE ALARM PLAN - 2ND FLOOR

drawing no.:

E421

drawing of

04/30/19 1:19:26 PM F:\2016\16-069 CCC ARTS-ADMIN\RECORD SET\16069E421.DWG

Record Dwgs

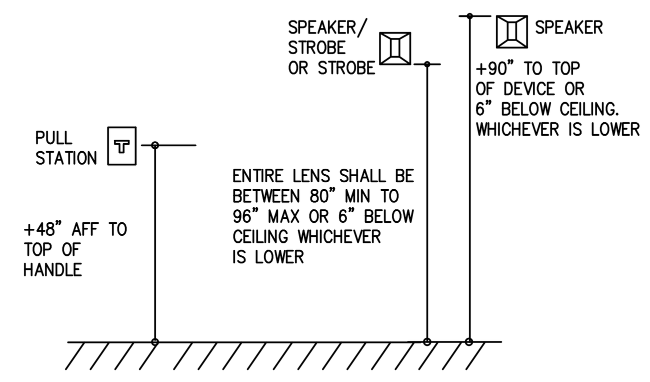

1 TYPICAL ELEVATIONS PULLS/SPEAKER/STROBE

NO SCALE

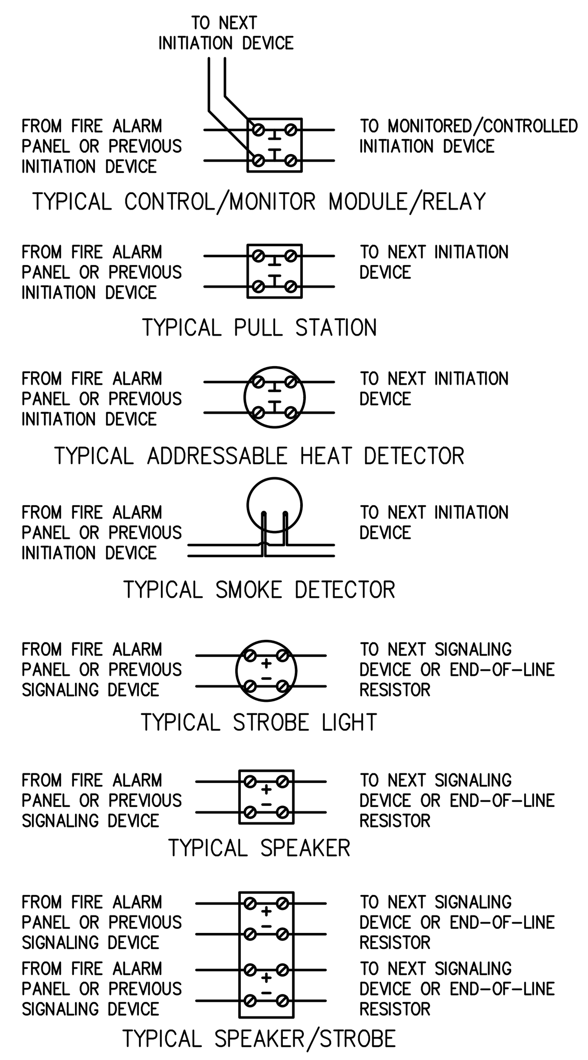

2 TYPICAL FIRE ALARM DETAILS

NOT TO SCALE

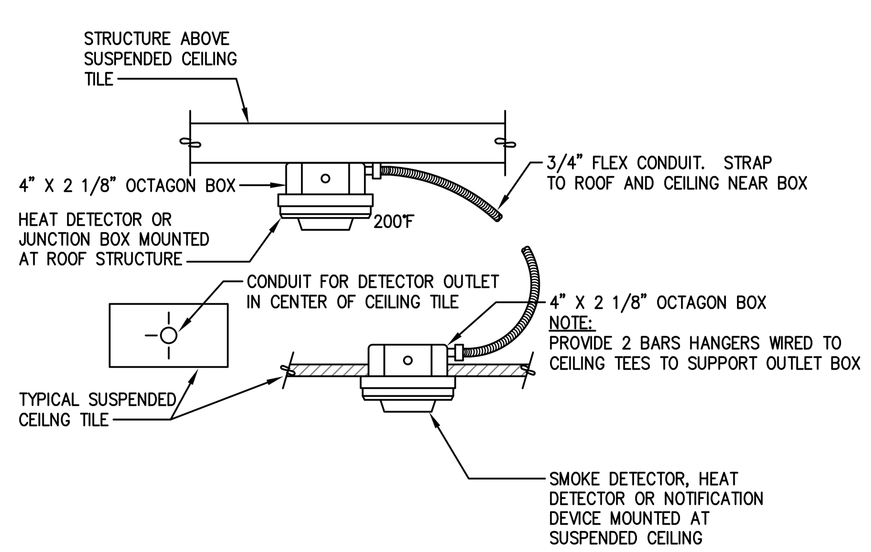

3 T-BAR CEILING MOUNTING DETAIL

NOT TO SCALE

FIRE ALARM WIRE SCHEDULE

TYPE	CONDUCTOR	SYSTEM DESCRIPTION
A	2#16 TWISTED/UNSHIELDED	INITIATION – SLC LOOP
B	2#12	SIGNAL
C	2#16	DOOR HOLDER CONNECTION

NOTE: ALL EXTERIOR CABLE SHALL BE WET RATED.

BILL OF MATERIALS

QTY.	DESCRIPTION	MODEL #	MANUFACTURER	CSFM LISTING #
1	(E) FACP	MXL	Siemens	7165-0067:0144
2	(E) REMOTE POWER SUPPLY	PS-8	Cooper Wheelock	7315-0785:0167
1	(N) REMOTE POWER SUPPLY	PS-8	Cooper Wheelock	7315-0785:0167
2	(N) SMOKE DETECTOR	FP-11	Siemens	7272-0067:0203
11	(N) WALL MOUNT STROBE	ST	Cooper Wheelock	7125-0785:0168
13	(N) WALL MOUNT HORN/STROBE	HS	Cooper Wheelock	7125-0785:0168
9	(N) CONTROL RELAY	TRI-R	Siemens	7300-0067:0146

IF NUMBER OF DEVICES VARIES BETWEEN BILL OF MATERIALS AND PLANS THE NUMBER OF DEVICES ON PLANS SHALL BE USED FOR PRICING. CONTRACTOR IS RESPONSIBLE FOR VERIFYING QUANTITIES.

FIRE ALARM OPERATION MATRIX

INPUT / OUTPUT	ANNUNCIATE ALARM CONDITION AT FACP	ANNUNCIATE TROUBLE CONDITION AT FACP	ANNUNCIATE ALARM CONDITION AT ANNUNCIATOR	ANNUNCIATE TROUBLE CONDITION AT ANNUNCIATOR	ACTIVATE HORN/STROBE UNITS THROUGHOUT BUILDING	ACTIVATE SPRINKLER RISER BELL	SHUTDOWN ASSOCIATED AHU AND FIRE SMOKE DAMPERS	ACTIVATE ALARM SIGNAL FOR CENTRAL STATION (SIGNAL VIA DRY CONTACTS)	ACTIVATE TROUBLE SIGNAL FOR CENTRAL STATION (SIGNAL VIA DRY CONTACTS)	ANNUNCIATE SUPERVISORY AT PANEL AND ANNUNCIATOR AND CENTRAL STATION	RECALL ELEVATOR TO FIRST FLOOR	RECALL ELEVATOR TO SECOND FLOOR
MANUAL STATION	X		X		X			X				
HEAT/SMOKE DETECTORS	X		X		X		X	X				
DUCT DETECTORS		X		X			X	X				
WATER FLOW	X		X		X	X	X	X				
TAMPER / PIV		X		X					X	X		
SYSTEM TROUBLE		X		X					X			
ELEVATOR MACHINE ROOM DETECTORS	X		X		X		X	X				X
ELEVATOR LOBBY SMOKE DETECTOR - FIRST FLOOR	X		X		X			X				X
ELEVATOR LOBBY SMOKE DETECTOR - SECOND FLOOR	X		X		X			X			X	

SCOPE OF WORK

REMOVE EXISTING DEVICES, CONDUIT AND WIRING WHERE SHOWN ON PLANS AND INSTALL NEW FIRE ALARM DEVICES AND WIRING AS SHOWN ON PLANS AND CONNECT TO EXISTING FIRE ALARM SYSTEM.

TYPE OF SYSTEM

–THIS IS AN EXISTING ADDRESSABLE FIRE ALARM SYSTEM.
–CLASS 'B' DETECTION.
–CLASS 'B' INITIATION.
–SYSTEM IS A PROTECTED PREMISIS AND REQUIRES 24 HOUR STANDBY. –THE SUPERVISING STATION SHALL BE LISTED AS EITHER UUFX OR INITIATING DEVICES FOR AREA OF WORK SHALL BE AUTOMATIC TYPE AS REQUIRED BY FIRE PROTECTION ACT (SB575) GREEN OAKS FAMILY ACADEMY MIDDLE SCHOOL.
– BUILDINGS ARE TYPE 'B' OCCUPANCY.
– SYSTEM DESIGNER: TIFFANY L. KANE, WHM INCORPORATED

APPLICABLE CODES

2016 CALIFORNIA BUILDING STANDARDS ADMINISTRATIVE CODE (PART1, TITLE 24, CCR)

2016 CALIFORNIA BUILDING CODE, VOLUMES 1 AND 2 (PART2, TITLE 24, CCR)
(2012 EDITION INTERNATIONAL BUILDING CODE WITH 2016 CALIFORNIA AMENDMENTS

2016 CALIFORNIA ELECTRICAL CODE (PART 3, TITLE 24, CCR)
(2011 EDITION NATIONAL ELECTRICAL CODE WITH 2016 CALIFORNIA AMENDMENTS)

2016 CALIFORNIA MECHANICAL CODE (PART 4, TITLE 24, CCR)
(2012 EDITION IAPMO UNIFORM MECHANICAL CODE WITH 2016 CALIFORNIA AMENDMENTS)

2016 CALIFORNIA PLUMBING CODE (PART 5, TITLE 24, CCR)
(2012 EDITION IAPMO UNIFORM PLUMBING CODE WITH 2016 CALIFORNIA AMENDMENTS)

2016 CALIFORNIA ENERGY CODE (PART 6, TITLE 24, CCR)

2016 CALIFORNIA FIRE CODE (PART 9, TITLE 24, CCR)
2016 CALIFORNIA REFERENCED STANDARDS CODE (PART 12, TITLE 24, CCR)
TITLE 19 PUBLIC SAFETY – STATE FIRE MARSHAL (CCR)
NFPA 13, 2016 EDITION, THE INSTALLATION OF AUTOMATIC SPRINKLER SYSTEMS, AS AMENDED
NFPA 14, 2016 EDITION, INSTALLATION OF STANDPIPE, PRIVATE HYDRANT AND HOSE SYSTEMS.
NFPA 24, 2016 EDITION, INSTALLATION OF PRIVATE FIRE SERVICE MAINS AND THEIR APPURTENANCES.
NFPA 72, 2016 EDITION, NATIONAL FIRE ALARM CODE, AS AMENDED.

FIRE ALARM SYSTEM NOTES

1. FINAL FIRE ALARM TEST SHALL BE MADE WITH THE DSA PROJECT INSPECTOR (PI). LOCAL FIRE AUTHORITY SHALL BE NOTIFIED OF DATE AND TIME OF FINAL FIRE ALARM TESTING AND SHALL ASSIST/WITNESS SUCH TESTING WHEN ABLE.
2. UNDERGROUND AND EXTERIOR CONDUITS WILL HAVE WATER–TIGHT FITTINGS. (CEC 110–11 AND 300–6)
3. FIRE ALARM DEVICE MOUNTING HEIGHTS:
   - PULL STATION: 48" TO TOP OF HANDLE ABOVE FINISHED FLOOR. (CEC 380–8c)
   - HORN INTERIOR: MINIMUM 90" TO TOP OF DEVICE ABOVE FINISHED FLOOR, NOT LESS THAN 6" FROM CEILING. (2016 NFPA72–18.4.8.1)
   - WALL MOUNTED STROBE OR HORN/STROBE: MINIMUM 80" TO BOTTOM OF STROBE LENS AND NOT GREATER THAN 96" TO TOP OF STROBE LENS, ABOVE FINISHED FLOOR, NOT LESS THAN 6" FROM CEILING. (2016 NFPA72–18.5.4.1)
4. TO ENSURE THAT AUDIBLE PUBLIC MODE SIGNALS ARE CLEARLY HEARD, UNLESS OTHERWISE PERMITTED BY 2016 NFPA72–18.4.3.2 THROUGH 18.4.3.5, THEY SHALL HAVE A SOUND LEVEL AT LEAST 15db ABOVE THE AVERAGE AMBIENT SOUND LEVEL OR 5db ABOVE THE MAXIMUM SOUND LEVEL HAVING A DURATION OF AT LEAST 60 SECONDS, WHICHEVER IS GREATER, MEASURED 5 ft (1.5 m) ABOVE THE FLOOR IN THE AREA REQUIRED TO BE SERVED BY THE SYSTEM USING THE A–WEIGHTED SCALE (dBA). (2016 NFPA72–18.4.3.1)
5. AUDIBLE DEVICES SHALL SOUND THE CALIFORNIA UNIFORM FIRE ALARM SIGNAL IN TEMPORAL MODE.
6. VISUAL DEVICES SHALL NOT EXCEED 2 FLASHES PER SECOND AND SHALL NOT BE SLOWER THAN 1 FLASH EVERY SECOND. (2016 NFPA72–18.5.2.1)
7. FIRE ALARM CONTRACTOR SHALL PROVIDE A "RECORD OF COMPLETION" TO THE PROJECT INSPECTOR (PI) / DSA AFTER COMPLETION OF OPERATIONAL ACCEPTANCE TESTS. (2016 NFPA 72–14.6.2.4 AND FIGURE 14.6.2.4)
8. ALL CIRCUITS SHALL BE SUPERVISED AGAINST OPENS, SHORTS AND GROUNDS.
9. INSTALLATION OF DEVICES SHALL BE IN ACCORDANCE WITH MANUFACTURER'S INSTRUCTIONS.
10. MARK ALL WIRES IN ACCORDANCE WITH 760–10.
11. ALL OUTSIDE FIRE ALARM DEVICES SHALL BE CSFM LISTED AS WEATHERPROOF TYPE.
12. EXISTING CAMPUS FIRE ALARM SYSTEM SHALL NOT BE DISCONNECTED OR TAKEN OUT OF SERVICE WITHOUT WRITTEN PERMISSION FROM SCHOOL DISTRICT. 48 HOUR NOTICE SHALL PROVIDED TO LOCAL FIRE AUTHORITY PRIOR TO FIRE ALARM SYSTEM SHUTDOWN.
13. ALL FIRE ALARM WIRING SHALL BE CONTINUOUS WITHOUT SPLICES AND TERMINATED IN TERMINAL BLOCKS OF THE DEVICE OR FIRE ALARM APPROVED TERMINAL BLOCKS IN TERMINAL CABINETS OR JUNCTION BOXES.
14. ALL FIRE ALARM WIRING INSTALLED IN UNDERGROUND CONDUIT OR OTHER WET LOCATIONS SHALL BE UL LISTED FOR WET LOCATIONS.
15. ALL WIRING TO BE RUN IN FIRE ALARM DEDICATED CONDUIT. ALL NEW FA WIRING SHALL BE INSTALLED IN CONDUIT MINIMUM SIZE 3/4" U.O.N. USE EXISTING FIRE ALARM CONDUITS WHERE PRACTICAL TO INSTALL A NEW FA WIRING. FIELD VERIFY EXACT EXISTING CONDUIT ROUTING.
16. ALL SHIELDS TO BE CONTINUOUS, DRY AND FREE FROM ALL GROUNDS AND SHORTS.
17. ELECTRICAL/FIRE ALARM CONTRACTOR SHALL VERIFY EXISTING AVAILABLE ADDRESSES ON EXISTING SYSTEM AND CORRECT ON AS–BUILT DRAWINGS FOR SUBMITTAL TO SCHOOL DISTRICT AT END OF PROJECT.
18. THIS CAMPUS HAS AN EXISTING UL LISTED CENTRAL MONITORING STATION: SUPERVISING STATION: AUTOMATIC FIRE ALARM SYSTEMS SHALL TRANSMIT THE ALARM, SUPERVISORY AND TROUBLE SIGNALS TO AN APPROVED SUPERVISING STATION AS REQUIRED BY NFPA 72, AS AMENDED BY CFC CHAPTER 80. THE SUPERVISION STATION SHALL BE LISTED AS EITHER UUFX OR UUJS BY UNDERWRITERS LABORATORY OR SHALL MEET THE REQUIREMENTS OF FACTORY MUTUAL RESEARCH APPROVAL STANDARD 3011.
19. A DOCUMENTATION CABINET SHALL BE INSTALLED PROXIMAL TO THE FACP PER NFPA 72, 7.7.2.1.
20. ALL RECORD DOCUMENTATION SHALL BE STORED IN THE DOCUMENTATION CABINET PER NFPA 72, 7.7.2.2.
21. THE DOCUMENTATION CABINET SHALL BE PROMINENTLY LABELED SYSTEM RECORD DOCUMENTS PER NFPA 72, 7.7.2.4.

architecture
planning
interiors

tBP/Architecture
1777 Oakland Boulevard, Suite 320
Walnut Creek, CA 94596
ph: 925.246.6419

architect

WHM INCORPORATED
Engineering Consultants
1605 School Street
Moraga, CA 94556
Tel (925)376-2902 * Fax (925)376-2904
cad@whminc.com
16-069

consultant

IDENTIFICATION STAMP
DIV. OF THE STATE ARCHITECT
OFFICE OF REGULATION SERVICES
APPL # 01-
FILE NO. 7-C1
AC ___ FLS ___ SS ___
DATE ___

DIVISION OF THE STATE ARCHITECT
1515 CLAY STREET
OAKLAND, CA94612
ph:(510) 622-3101

agency

C-4008 APPLIED ARTS & ADMIN RENOVATION
2600 MISSION BELL DRIVE, SAN PABLO, CA 94806

CONTRA COSTA COMMUNITY COLLEGE DISTRICT
500 COURT STREET MARTINEZ, CA 94553

owner

tBP project number: 20865.00
file name: A111_DEMO 1ST.DWG
drawn by: DM checked by: TLK
date: APRIL 30, 2019

rev:	date:	description:
	4/30/2019	RECORD SET

THIS DRAWING AND THE DESIGNS, DEPICTIONS, IDEAS AND OTHER INFORMATION CONTAINED HEREIN CONSTITUTE UNPUBLISHED WORK OF tBP/ARCHITECTURE AND SHALL REMAIN PROPERTY OF tBP/ARCHITECTURE IN PERPETUITY. NO PART THEREOF SHALL BE REPRODUCED, DISCLOSED, DISTRIBUTED, SOLD, PUBLISHED OR OTHERWISE USED IN ANY WAY WITHOUT THE ADVANCED EXPRESS WRITTEN CONSENT OF tBP/ARCHITECTURE.

drawing title:
FIRE ALARM NOTES, DETAILS & SCHEDULES

drawing no.:
E501

drawing of

Record Dwgs

04/30/19 1:19:34 PM F:\2016\16-069 CCC ARTS-ADMIN\RECORD SET\16069E501.DWG

VOLTAGE DROP (VD) CALCULATION

PROJECT NAME: CCC APPLIED ARTS
SIGNAL CIRCUIT #: 1B1

DEVICE #	1st	2nd	3rd	4th	5th	6th	7th	8th	9th	10th
GAUGE WIRE	12	12	12	12	12	12	12	12	12	12
DISTANCE (FT)	30	20	40	45	10	**5**	75	55	5	25
AMPS OF DEVICE	0.135	0.182	0.057	0.182	0.057	0.148	0.082	0.148	0.086	0.082
TOTAL AMPS@DEV.	1.239	1.104	0.922	0.865	0.683	0.626	0.478	0.396	0.248	0.162
VOLT. DROP @ DEV.	0.122951	0.073036	0.121992	0.128757	0.022592	0.010353	0.118585	0.072044	0.004102	0.013397

DEVICE #	11th	12th	13th	14th	15th	16th	17th	18th	19th	20th
GAUGE WIRE	12	12	12	12	12	12	12	12	12	12
DISTANCE (FT)	15									
AMPS OF DEVICE	0.08									
TOTAL AMPS@DEV.	0.08	0	0	0	0	0	0	0	0	0
VOLT. DROP @ DEV.	0.003969	0	0	0	0	0	0	0	0	0

TOTAL CKT. AMPS 1.239 AMPS
TOTAL CKT V DROP = 0.6918 VDC
CKT VOLTAGE = 20.4
% VOLTAGE DROP= 3.4%

WIRE SIZE	RESIS. /M FT.	CIRC. MILS.
10	1.24	10380
12	1.59	6530
14	2.52	4110
16	4.02	2580
18	6.39	1620
20	10.1	1020

** FORMULA **
I * FEET * 21.6

C.M.

VOLTAGE DROP (VD) CALCULATION

PROJECT NAME: CCC APPLIED ARTS
SIGNAL CIRCUIT #: 2A1

DEVICE #	1st	2nd	3rd	4th	5th	6th	7th	8th	9th	10th
GAUGE WIRE	12	12	12	12	12	12	12	12	12	12
DISTANCE (FT)	75	40	30	15	25					
AMPS OF DEVICE	0.082	0.082	0.148	0.057	0.057					
TOTAL AMPS@DEV.	0.426	0.344	0.262	0.114	0.057	0	0	0	0	0
VOLT. DROP @ DEV.	0.105685	0.045515	0.025999	0.005656	0.004714	0	0	0	0	0

DEVICE #	11th	12th	13th	14th	15th	16th	17th	18th	19th	20th
GAUGE WIRE	12	12	12	12	12	12	12	12	12	12
DISTANCE (FT)										
AMPS OF DEVICE										
TOTAL AMPS@DEV.	0	0	0	0	0	0	0	0	0	0
VOLT. DROP @ DEV.	0	0	0	0	0	0	0	0	0	0

TOTAL CKT. AMPS 0.426 AMPS
TOTAL CKT V DROP = 0.1876 VDC
CKT VOLTAGE = 20.4
% VOLTAGE DROP= 0.9%

WIRE SIZE	RESIS. /M FT.	CIRC. MILS.
10	1.24	10380
12	1.59	6530
14	2.52	4110
16	4.02	2580
18	6.39	1620
20	10.1	1020

** FORMULA **
I * FEET * 21.6

C.M.

VOLTAGE DROP (VD) CALCULATION

PROJECT NAME: CCC APPLIED ARTS
SIGNAL CIRCUIT #: 2A2

DEVICE #	1st	2nd	3rd	4th	5th	6th	7th	8th	9th	10th
GAUGE WIRE	12	12	12	12	12	12	12	12	12	12
DISTANCE (FT)	50	25	10	40	55	**20**				
AMPS OF DEVICE	0.082	0.082	0.082	0.082	0.057	0.082				
TOTAL AMPS@DEV.	0.467	0.385	0.303	0.221	0.139	0.082	0	0	0	0
VOLT. DROP @ DEV.	0.077237	0.031838	0.010023	0.029241	0.025288	0.005425	0	0	0	0

DEVICE #	11th	12th	13th	14th	15th	16th	17th	18th	19th	20th
GAUGE WIRE	12	12	12	12	12	12	12	12	12	12
DISTANCE (FT)										
AMPS OF DEVICE										
TOTAL AMPS@DEV.	0	0	0	0	0	0	0	0	0	0
VOLT. DROP @ DEV.	0	0	0	0	0	0	0	0	0	0

TOTAL CKT. AMPS 0.467 AMPS
TOTAL CKT V DROP = 0.1791 VDC
CKT VOLTAGE = 20.4
% VOLTAGE DROP= 0.9%

WIRE SIZE	RESIS. /M FT.	CIRC. MILS.
10	1.24	10380
12	1.59	6530
14	2.52	4110
16	4.02	2580
18	6.39	1620
20	10.1	1020

** FORMULA **
I * FEET * 21.6

C.M.

VOLTAGE DROP (VD) CALCULATION

PROJECT NAME: CCC APPLIED ARTS
SIGNAL CIRCUIT #: 2A3

DEVICE #	1st	2nd	3rd	4th	5th	6th	7th	8th	9th	10th
GAUGE WIRE	12	12	12	12	12	12	12	12	12	12
DISTANCE (FT)	60	40	50	60	5	**58**	15	5	20	
AMPS OF DEVICE	0.057	0.102	0.175	0.175	0.148	0.082	0.057	0.057	0.085	
TOTAL AMPS@DEV.	0.938	0.881	0.779	0.604	0.429	0.281	0.199	0.142	0.085	0
VOLT. DROP @ DEV.	0.186164	0.116567	0.128839	0.119875	0.007095	0.053911	0.009874	0.002349	0.005623	0

DEVICE #	11th	12th	13th	14th	15th	16th	17th	18th	19th	20th
GAUGE WIRE	12	12	12	12	12	12	12	12	12	12
DISTANCE (FT)										
AMPS OF DEVICE										
TOTAL AMPS@DEV.	0	0	0	0	0	0	0	0	0	0
VOLT. DROP @ DEV.	0	0	0	0	0	0	0	0	0	0

TOTAL CKT. AMPS 0.938 AMPS
TOTAL CKT V DROP = 0.6303 VDC
CKT VOLTAGE = 20.4
% VOLTAGE DROP= 3.1%

WIRE SIZE	RESIS. /M FT.	CIRC. MILS.
10	1.24	10380
12	1.59	6530
14	2.52	4110
16	4.02	2580
18	6.39	1620
20	10.1	1020

** FORMULA **
I * FEET * 21.6

C.M.

VOLTAGE DROP (VD) CALCULATION

PROJECT NAME: CCC APPLIED ARTS
SIGNAL CIRCUIT #: 2A4

DEVICE #	1st	2nd	3rd	4th	5th	6th	7th	8th	9th	10th
GAUGE WIRE	12	12	12	12	12	12	12	12	12	12
DISTANCE (FT)	65	15	15	15						
AMPS OF DEVICE	0.057	0.057	0.057	0.057						
TOTAL AMPS@DEV.	0.228	0.171	0.114	0.057	0	0	0	0	0	0
VOLT. DROP @ DEV.	0.049022	0.008485	0.005656	0.002828	0	0	0	0	0	0

DEVICE #	11th	12th	13th	14th	15th	16th	17th	18th	19th	20th
GAUGE WIRE	12	12	12	12	12	12	12	12	12	12
DISTANCE (FT)										
AMPS OF DEVICE										
TOTAL AMPS@DEV.	0	0	0	0	0	0	0	0	0	0
VOLT. DROP @ DEV.	0	0	0	0	0	0	0	0	0	0

TOTAL CKT. AMPS 0.228 AMPS
TOTAL CKT V DROP = 0.066 VDC
CKT VOLTAGE = 20.4
% VOLTAGE DROP= 0.3%

WIRE SIZE	RESIS. /M FT.	CIRC. MILS.
10	1.24	10380
12	1.59	6530
14	2.52	4110
16	4.02	2580
18	6.39	1620
20	10.1	1020

** FORMULA **
I * FEET * 21.6

C.M.

VOLTAGE DROP (VD) CALCULATION

PROJECT NAME: CCC APPLIED ARTS
SIGNAL CIRCUIT #: 2B3

DEVICE #	1st	2nd	3rd	4th	5th	6th	7th	8th	9th	10th
GAUGE WIRE	12	12	12	12	12	12	12	12	12	12
DISTANCE (FT)	40	50	35	35	5	40				
AMPS OF DEVICE	0.057	0.175	0.175	0.082	0.102	0.102				
TOTAL AMPS@DEV.	0.693	0.636	0.461	0.286	0.204	0.102	0	0	0	0
VOLT. DROP @ DEV.	0.091692	0.105188	0.053372	0.033111	0.003374	0.013496	0	0	0	0

DEVICE #	11th	12th	13th	14th	15th	16th	17th	18th	19th	20th
GAUGE WIRE	12	12	12	12	12	12	12	12	12	12
DISTANCE (FT)										
AMPS OF DEVICE										
TOTAL AMPS@DEV.	0	0	0	0	0	0	0	0	0	0
VOLT. DROP @ DEV.	0	0	0	0	0	0	0	0	0	0

TOTAL CKT. AMPS 0.693 AMPS
TOTAL CKT V DROP = 0.3002 VDC
CKT VOLTAGE = 20.4
% VOLTAGE DROP= 1.5%

WIRE SIZE	RESIS. /M FT.	CIRC. MILS.
10	1.24	10380
12	1.59	6530
14	2.52	4110
16	4.02	2580
18	6.39	1620
20	10.1	1020

** FORMULA **
I * FEET * 21.6

C.M.

VOLTAGE DROP (VD) CALCULATION

PROJECT NAME: CCC APPLIED ARTS
SIGNAL CIRCUIT #: 1A1

DEVICE #	1st	2nd	3rd	4th	5th	6th	7th	8th	9th	10th
GAUGE WIRE	12	12	12	12	12	12	12	12	12	12
DISTANCE (FT)	40	30	35	30	40	**30**	50	5	65	20
AMPS OF DEVICE	0.057	0.135	0.082	0.057	0.082	0.148	0.148	0.148	0.082	0.135
TOTAL AMPS@DEV.	1.509	1.452	1.317	1.235	1.178	1.096	0.948	0.8	0.652	0.57
VOLT. DROP @ DEV.	0.199659	0.144088	0.152474	0.122554	0.155864	0.108761	0.15679	0.013231	0.140185	0.037709

DEVICE #	11th	12th	13th	14th	15th	16th	17th	18th	19th	20th
GAUGE WIRE	12	12	12	12	12	12	12	12	12	12
DISTANCE (FT)	50	30	60	15						
AMPS OF DEVICE	0.057	0.148	0.148	0.082						
TOTAL AMPS@DEV.	0.435	0.378	0.23	0.082	0	0	0	0	0	0
VOLT. DROP @ DEV.	0.071945	0.037511	0.045648	0.004069	0	0	0	0	0	0

TOTAL CKT. AMPS 1.509 AMPS
TOTAL CKT V DROP = 1.3905 VDC
CKT VOLTAGE = 20.4
% VOLTAGE DROP= 6.8%

WIRE SIZE	RESIS. /M FT.	CIRC. MILS.
10	1.24	10380
12	1.59	6530
14	2.52	4110
16	4.02	2580
18	6.39	1620
20	10.1	1020

** FORMULA **
I * FEET * 21.6

C.M.

VOLTAGE DROP (VD) CALCULATION

PROJECT NAME: CCC APPLIED ARTS
SIGNAL CIRCUIT #: 2A1

DEVICE #	1st	2nd	3rd	4th	5th	6th	7th	8th	9th	10th
GAUGE WIRE	12	12	12	12	12	12	12	12	12	12
DISTANCE (FT)	85	10	35	50	55	**10**	65	45	10	35
AMPS OF DEVICE	0.148	0.148	0.082	0.135	0.148	0.082	0.135	0.148	0.082	0.082
TOTAL AMPS@DEV.	1.504	1.356	1.208	1.126	0.991	0.843	0.761	0.626	0.478	0.396
VOLT. DROP @ DEV.	0.42287	0.044854	0.139854	0.18623	0.180292	0.027885	0.163621	0.093181	0.015811	0.045846

DEVICE #	11th	12th	13th	14th	15th	16th	17th	18th	19th	20th
GAUGE WIRE	12	12	12	12	12	12	12	12	12	12
DISTANCE (FT)	25	20	40							
AMPS OF DEVICE	0.057	0.175	0.082							
TOTAL AMPS@DEV.	0.314	0.257	0.082	0	0	0	0	0	0	0
VOLT. DROP @ DEV.	0.025966	0.017002	0.01085	0	0	0	0	0	0	0

TOTAL CKT. AMPS 1.504 AMPS
TOTAL CKT V DROP = 1.3743 VDC
CKT VOLTAGE = 20.4
% VOLTAGE DROP= 6.7%

WIRE SIZE	RESIS. /M FT.	CIRC. MILS.
10	1.24	10380
12	1.59	6530
14	2.52	4110
16	4.02	2580
18	6.39	1620
20	10.1	1020

** FORMULA **
I * FEET * 21.6

C.M.

EXISTING FIRE ALARM CONTROL PANEL BATTERY CALCULATIONS

PANEL MODULES

QTY	DESCRIPTION	STANDBY EACH	STANDBY TOTAL	ALARM EACH	ALARM TOTAL
1	(E) SMB-2 MAIN CONTROL BOARD	0.175000	0.175000	0.175000	0.175000
2	(E) ALD LOOP	0.066000	0.132000	0.066000	0.132000
2	(E) NAC CIRCUIT	0.012000	0.024000	0.012000	0.024000
1	(E) MKB-4 ANNUNCIATOR KEYBOARD	0.005000	0.005000	0.005000	0.005000
1	(E) NIM-1W NETWORK INTERFACE MODULE	0.070000	0.070000	0.070000	0.070000
1	(E) NIM-1W NETWORK INTERFACE MODULE	0.070000	0.070000	0.070000	0.070000
1	(E) NIM-1W NETWORK INTERFACE MODULE	0.070000	0.070000	0.070000	0.070000
	PANEL STANDBY CURRENT		0.546000		
	PANEL ALARM CURRENT				0.546000

FIELD DEVICES

QTY	DESCRIPTION	STANDBY EACH	STANDBY TOTAL	ALARM EACH	ALARM TOTAL
	DEVICE STANDBY CURRENT		0.000000		
	DEVICE ALARM CURRENT				0.000000

TOTAL SYSTEM CURRENT

DESCRIPTION	STANDBY	ALARM
CONTROL PANEL	0.546000	0.546000
FIELD DEVICES	0.000000	0.000000
TOTAL STANDBY CURRENT	0.546000	
X 24 HOUR STANDBY	13.104000	
TOTAL ALARM CURRENT		0.546000
5 MINUTES OF ALARM (X .083)		0.045318
TOTAL BATTERY REQUIREMENT		13.149318
TOTAL BAT. WITH 20% SAFETY MARGIN		15.7792
BATTERY SUPPLIED		* (2) 18 AH

* THE EXISTING ALD LOOPS INCLUDE CURRENT DRAW FOR MAXIMUM NUMBER OF INITIATION DEVICES, THEREFORE ADDITIONAL DEVICES ADDED IN THIS PROJECT DO NOT CHANGE THE EXISTING BATTERY REQUIREMENT.

(E) RPS "1A"

PANEL MODULES

QTY	DESCRIPTION	STANDBY EACH	STANDBY TOTAL	ALARM EACH	ALARM TOTAL
1	(E) WHEELOCK PS-8	0.1290	0.1290	0.1290	0.1290
	PANEL STANDBY CURRENT		0.1290		
	PANEL ALARM CURRENT				0.1290

FIELD DEVICES

QTY	DESCRIPTION	STANDBY EACH	STANDBY TOTAL	ALARM EACH	ALARM TOTAL
4	(E) WALL MOUNT STROBE (15CD)	0.0000	0.0000	0.0570	0.2280
	(E) WALL MOUNT STROBE (30CD)	0.0000	0.0000	0.0850	0.0000
5	(E) WALL MOUNT STROBE (75CD)	0.0000	0.0000	0.1350	0.6750
	(E) WALL MOUNT STROBE (110CD)	0.0000	0.0000	0.1820	0.0000
10	(E) WALL MOUNT HORN/STROBE (15CD)	0.0000	0.0000	0.0820	0.8200
	(E) WALL MOUNT HORN/STROBE (30CD)	0.0000	0.0000	0.1020	0.0000
8	(E) WALL MOUNT HORN/STROBE (75CD)	0.0000	0.0000	0.1480	1.1840
	(E) WALL MOUNT HORN/STROBE (110CD)	0.0000	0.0000	0.1750	0.0000
	(N) WALL MOUNT STROBE (15CD)	0.0000	0.0000	0.0570	0.0000
	(N) WALL MOUNT STROBE (30CD)	0.0000	0.0000	0.0850	0.0000
	(N) WALL MOUNT STROBE (75CD)	0.0000	0.0000	0.1350	0.0000
	(N) WALL MOUNT STROBE (110CD)	0.0000	0.0000	0.1820	0.0000
	(N) WALL MOUNT HORN/STROBE (15CD)	0.0000	0.0000	0.0820	0.0000
	(N) WALL MOUNT HORN/STROBE (30CD)	0.0000	0.0000	0.1020	0.0000
	(N) WALL MOUNT HORN/STROBE (75CD)	0.0000	0.0000	0.1480	0.0000
	(N) WALL MOUNT HORN/STROBE (110CD)	0.0000	0.0000	0.1750	0.0000
	DEVICE STANDBY CURRENT		0.0000		
	DEVICE ALARM CURRENT				0.0000

TOTAL SYSTEM CURRENT

DESCRIPTION	STANDBY	ALARM
CONTROL PANEL	0.1290	0.1290
FIELD DEVICES	0.0000	0.0000
TOTAL STANDBY CURRENT	0.1290	
X 24 HOUR STANDBY	3.0960	
TOTAL ALARM CURRENT		0.1290
5 MINUTES OF ALARM (X .083)		0.0107
TOTAL BATTERY REQUIREMENT		3.1067
TOTAL BAT. WITH 20% SAFETY MARGIN		3.7280
BATTERY SUPPLIED		(2) 7AH

(N) RPS "2A"

PANEL MODULES

QTY	DESCRIPTION	STANDBY EACH	STANDBY TOTAL	ALARM EACH	ALARM TOTAL
1	(N) WHEELOCK PS-8	0.1290	0.1290	0.1290	0.1290
	PANEL STANDBY CURRENT		0.1290		
	PANEL ALARM CURRENT				0.1290

FIELD DEVICES

QTY	DESCRIPTION	STANDBY EACH	STANDBY TOTAL	ALARM EACH	ALARM TOTAL
3	(E) WALL MOUNT STROBE (15CD)	0.0000	0.0000	0.0570	0.1710
	(E) WALL MOUNT STROBE (30CD)	0.0000	0.0000	0.0850	0.0000
	(E) WALL MOUNT STROBE (75CD)	0.0000	0.0000	0.1350	0.0000
	(E) WALL MOUNT STROBE (110CD)	0.0000	0.0000	0.1820	0.0000
7	(E) WALL MOUNT HORN/STROBE (15CD)	0.0000	0.0000	0.0820	0.5740
	(E) WALL MOUNT HORN/STROBE (30CD)	0.0000	0.0000	0.1020	0.0000
1	(E) WALL MOUNT HORN/STROBE (75CD)	0.0000	0.0000	0.1480	0.1480
	(E) WALL MOUNT HORN/STROBE (110CD)	0.0000	0.0000	0.1750	0.0000
8	(N) WALL MOUNT STROBE (15CD)	0.0000	0.0000	0.0570	0.4560
	(N) WALL MOUNT STROBE (30CD)	0.0000	0.0000	0.0850	0.0000
	(N) WALL MOUNT STROBE (75CD)	0.0000	0.0000	0.1350	0.0000
1	(N) WALL MOUNT STROBE (110CD)	0.0000	0.0000	0.1820	0.1820
1	(N) WALL MOUNT HORN/STROBE (15CD)	0.0000	0.0000	0.0820	0.0820
1	(N) WALL MOUNT HORN/STROBE (30CD)	0.0000	0.0000	0.1020	0.1020
1	(N) WALL MOUNT HORN/STROBE (75CD)	0.0000	0.0000	0.1480	0.1480
2	(N) WALL MOUNT HORN/STROBE (110CD)	0.0000	0.0000	0.1750	0.3500
	DEVICE STANDBY CURRENT		0.0000		
	DEVICE ALARM CURRENT				1.3200

TOTAL SYSTEM CURRENT

DESCRIPTION	STANDBY	ALARM
CONTROL PANEL	0.1290	0.1290
FIELD DEVICES	0.0000	1.3200
TOTAL STANDBY CURRENT	0.1290	
X 24 HOUR STANDBY	3.0960	
TOTAL ALARM CURRENT		1.4490
5 MINUTES OF ALARM (X .083)		0.1203
TOTAL BATTERY REQUIREMENT		3.2163
TOTAL BAT. WITH 20% SAFETY MARGIN		3.8595
BATTERY SUPPLIED		(2) 7AH

(E) RPS "1B"

PANEL MODULES

QTY	DESCRIPTION	STANDBY EACH	STANDBY TOTAL	ALARM EACH	ALARM TOTAL
1	(E) WHEELOCK PS-8	0.1290	0.1290	0.1290	0.1290
	PANEL STANDBY CURRENT		0.1290		
	PANEL ALARM CURRENT				0.1290

FIELD DEVICES

QTY	DESCRIPTION	STANDBY EACH	STANDBY TOTAL	ALARM EACH	ALARM TOTAL
4	(E) WALL MOUNT STROBE (15CD)	0.0000	0.0000	0.0570	0.2280
	(E) WALL MOUNT STROBE (30CD)	0.0000	0.0000	0.0850	0.0000
1	(E) WALL MOUNT STROBE (75CD)	0.0000	0.0000	0.1350	0.1350
1	(E) WALL MOUNT STROBE (110CD)	0.0000	0.0000	0.1820	0.1820
7	(E) WALL MOUNT HORN/STROBE (15CD)	0.0000	0.0000	0.0820	0.5740
1	(E) WALL MOUNT HORN/STROBE (30CD)	0.0000	0.0000	0.1020	0.1020
1	(E) WALL MOUNT HORN/STROBE (75CD)	0.0000	0.0000	0.1480	0.1480
3	(E) WALL MOUNT HORN/STROBE (110CD)	0.0000	0.0000	0.1750	0.5250
1	(N) WALL MOUNT STROBE (15CD)	0.0000	0.0000	0.0570	0.0570
1	(N) WALL MOUNT STROBE (30CD)	0.0000	0.0000	0.0850	0.0850
	(N) WALL MOUNT STROBE (75CD)	0.0000	0.0000	0.1350	0.0000
1	(N) WALL MOUNT STROBE (110CD)	0.0000	0.0000	0.1820	0.1820
	(N) WALL MOUNT HORN/STROBE (15CD)	0.0000	0.0000	0.0820	0.0000
	(N) WALL MOUNT HORN/STROBE (30CD)	0.0000	0.0000	0.1020	0.0000
2	(N) WALL MOUNT HORN/STROBE (75CD)	0.0000	0.0000	0.1480	0.2960
	(N) WALL MOUNT HORN/STROBE (110CD)	0.0000	0.0000	0.1750	0.0000
	DEVICE STANDBY CURRENT		0.0000		
	DEVICE ALARM CURRENT				0.6200

TOTAL SYSTEM CURRENT

DESCRIPTION	STANDBY	ALARM
CONTROL PANEL	0.1290	0.1290
FIELD DEVICES	0.0000	0.6200
TOTAL STANDBY CURRENT	0.1290	
X 24 HOUR STANDBY	3.0960	
TOTAL ALARM CURRENT		0.7490
5 MINUTES OF ALARM (X .083)		0.0622
TOTAL BATTERY REQUIREMENT		3.1582
TOTAL BAT. WITH 20% SAFETY MARGIN		3.7898
BATTERY SUPPLIED		(2) 7AH

(E) RPS "2B"

PANEL MODULES

QTY	DESCRIPTION	STANDBY EACH	STANDBY TOTAL	ALARM EACH	ALARM TOTAL
1	(E) WHEELOCK PS-8	0.1290	0.1290	0.1290	0.1290
	PANEL STANDBY CURRENT		0.1290		
	PANEL ALARM CURRENT				0.1290

FIELD DEVICES

QTY	DESCRIPTION	STANDBY EACH	STANDBY TOTAL	ALARM EACH	ALARM TOTAL
2	(E) WALL MOUNT STROBE (15CD)	0.0000	0.0000	0.0570	0.1140
	(E) WALL MOUNT STROBE (30CD)	0.0000	0.0000	0.0850	0.0000
4	(E) WALL MOUNT STROBE (75CD)	0.0000	0.0000	0.1350	0.5400
	(E) WALL MOUNT STROBE (110CD)	0.0000	0.0000	0.1820	0.0000
10	(E) WALL MOUNT HORN/STROBE (15CD)	0.0000	0.0000	0.0820	0.8200
4	(E) WALL MOUNT HORN/STROBE (30CD)	0.0000	0.0000	0.1020	0.4080
6	(E) WALL MOUNT HORN/STROBE (75CD)	0.0000	0.0000	0.1480	0.8880
3	(E) WALL MOUNT HORN/STROBE (110CD)	0.0000	0.0000	0.1750	0.5250
	(N) WALL MOUNT STROBE (15CD)	0.0000	0.0000	0.0570	0.0000
	(N) WALL MOUNT STROBE (30CD)	0.0000	0.0000	0.0850	0.0000
	(N) WALL MOUNT STROBE (75CD)	0.0000	0.0000	0.1350	0.0000
	(N) WALL MOUNT STROBE (110CD)	0.0000	0.0000	0.1820	0.0000
2	(N) WALL MOUNT HORN/STROBE (15CD)	0.0000	0.0000	0.0820	0.1640
2	(N) WALL MOUNT HORN/STROBE (30CD)	0.0000	0.0000	0.1020	0.2040
	(N) WALL MOUNT HORN/STROBE (75CD)	0.0000	0.0000	0.1480	0.0000
2	(N) WALL MOUNT HORN/STROBE (110CD)	0.0000	0.0000	0.1750	0.3500
	DEVICE STANDBY CURRENT		0.0000		
	DEVICE ALARM CURRENT				0.7180

TOTAL SYSTEM CURRENT

DESCRIPTION	STANDBY	ALARM
CONTROL PANEL	0.1290	0.1290
FIELD DEVICES	0.0000	0.7180
TOTAL STANDBY CURRENT	0.1290	
X 24 HOUR STANDBY	3.0960	
TOTAL ALARM CURRENT		0.8470
5 MINUTES OF ALARM (X .083)		0.0703
TOTAL BATTERY REQUIREMENT		3.1663
TOTAL BAT. WITH 20% SAFETY MARGIN		3.7996
BATTERY SUPPLIED		(2) 7AH

tBP architecture planning interiors
tBP/Architecture
1777 Oakland Boulevard, Suite 320
Walnut Creek, CA 94596
ph: 925.246.6419
architect

WHM INCORPORATED
Engineering Consultants
1605 School Street
Moraga, CA 94556
consultant

DIVISION OF THE STATE ARCHITECT
1515 CLAY STREET
OAKLAND, CA 94612
ph:(510) 622-3101
agency

C-4008 APPLIED ARTS & ADMIN RENOVATION
2600 MISSION BELL DRIVE, SAN PABLO, CA 94806

CONTRA COSTA COMMUNITY COLLEGE DISTRICT
500 COURT STREET MARTINEZ, CA 94553
owner

tBP project number: 20865.00
file name: A111_DEMO 1ST.DWG
drawn by: DM checked by: TLK
date: APRIL 30, 2019
rev: date: description:
4/30/2019 RECORD SET

drawing title:
FIRE ALARM CALCULATIONS

drawing no.:
E502

drawing of

Record Dwgs

04/30/19 1:20:09 PM F:\2016\16-060 CCC ARTS-ADMIN\RECORD SET\16060E502.DWG

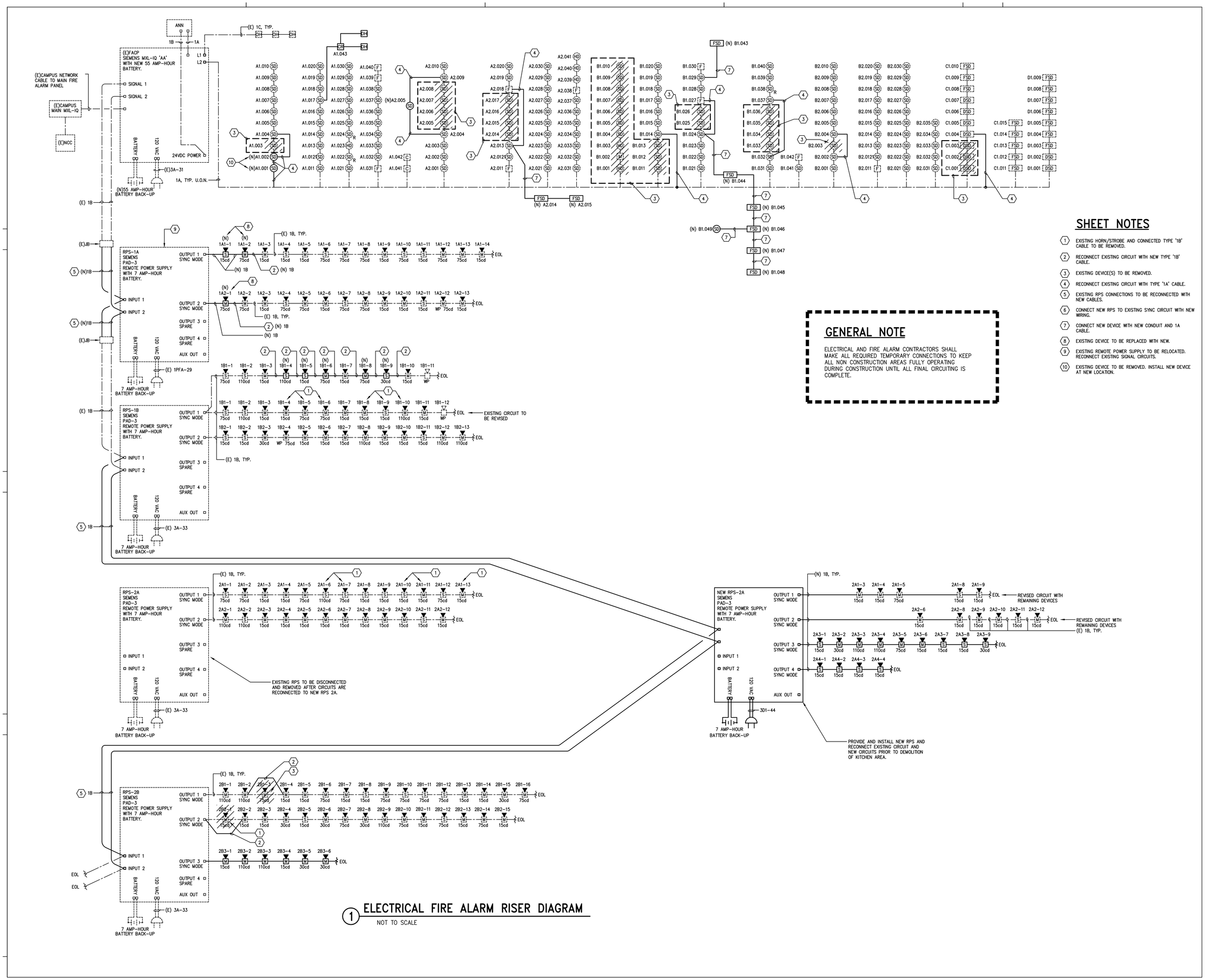

1 ELECTRICAL FIRE ALARM RISER DIAGRAM

NOT TO SCALE

GENERAL NOTE

ELECTRICAL AND FIRE ALARM CONTRACTORS SHALL MAKE ALL REQUIRED TEMPORARY CONNECTIONS TO KEEP ALL NON CONSTRUCTION AREAS FULLY OPERATING DURING CONSTRUCTION UNTIL ALL FINAL CIRCUITING IS COMPLETE.

SHEET NOTES

1. EXISTING HORN/STROBE AND CONNECTED TYPE '1B' CABLE TO BE REMOVED.
2. RECONNECT EXISTING CIRCUIT WITH NEW TYPE '1B' CABLE.
3. EXISTING DEVICE(S) TO BE REMOVED.
4. RECONNECT EXISTING CIRCUIT WITH TYPE '1A' CABLE.
5. EXISTING RPS CONNECTIONS TO BE RECONNECTED WITH NEW CABLES.
6. CONNECT NEW RPS TO EXISTING SYNC CIRCUIT WITH NEW WIRING.
7. CONNECT NEW DEVICE WITH NEW CONDUIT AND 1A CABLE.
8. EXISTING DEVICE TO BE REPLACED WITH NEW.
9. EXISTING REMOTE POWER SUPPLY TO BE RELOCATED. RECONNECT EXISTING SIGNAL CIRCUITS.
10. EXISTING DEVICE TO BE REMOVED. INSTALL NEW DEVICE AT NEW LOCATION.

tBP
architecture
planning
interiors

tBP/Architecture
1777 Oakland Boulevard, Suite 320
Walnut Creek, CA 94596
ph: 925.246.6419

architect

WHM INCORPORATED
Engineering Consultants
1505 School Street
Moraga, CA 94556
tel (925)376-2302 • Fax (925)376-2904
cod@whminc.com
ts-249

consultant

IDENTIFICATION STAMP
DIV. OF THE STATE ARCHITECT
OFFICE OF REGULATION SERVICES
APPL # 01-
FILE NO. 7-C1
AC ____ FCS ____ SS ____
DATE ____

DIVISION OF THE STATE ARCHITECT
1515 CLAY STREET
OAKLAND, CA94612
ph:(510) 622-3101

agency

C-4008 APPLIED ARTS & ADMIN RENOVATION

2600 MISSION BELL DRIVE, SAN PABLO, CA 94806

CONTRA COSTA COMMUNITY COLLEGE DISTRICT
500 COURT STREET MARTINEZ, CA 94553

owner

tBP project number: 20865.00
file name: A111_DEMO 1ST.DWG
drawn by: DM checked by: TLK
date: APRIL 30, 2019

rev:	date:	description:
	4/30/2019	RECORD SET

ALL IDEAS AND DESIGNS, PLANS, SPECIFICATIONS, PLANS AND OTHER INFORMATION CONTAINED HEREIN CONSTITUTE UNPUBLISHED WORK OF tBP/ARCHITECTURE AND SHALL REMAIN PROPERTY OF tBP/ARCHITECTURE IN PERPETUITY. NO PART THEREOF SHALL BE REPRODUCED, DISCLOSED, DISTRIBUTED, SOLD, PUBLISHED OR OTHERWISE USED IN ANY WAY WITHOUT THE ADVANCED EXPRESS WRITTEN CONSENT OF tBP/ARCHITECTURE.

drawing title:

FIRE ALARM RISER DIAGRAM

drawing no.:

E503

drawing of

04/30/19 1:20:11 PM F:\2016\16-069 CCC ARTS-ADMIN\RECORD SET\16069E503.DWG

Record Dwgs

TECHNOLOGY TITLE SHEET

THE PURPOSE OF THIS SHEET IS TO ILLUSTRATE AND DEFINE GRAPHIC SYMBOLS WHICH MAY OCCUR ON THE TECHNOLOGY DRAWING SET. THE ILLUSTRATION OF A SYMBOL, OR SYSTEM OF SYMBOLS, ON THIS SHEET DOES NOT NECESSARILY INDICATE THAT THE BUILDING COMPONENT REPRESENTED SYSTEM BY THE SYMBOL IS USED AS PART OF THIS PROJECT. REFER TO THE COMPLETE DRAWING PACKAGE AND SPECIFICATIONS TO DETERMINE THE SCOPE OF THE WORK.

ABBREVIATIONS

NOT ALL ABBREV. MAY BE USED

A	AMPERES
ACAMS	ACCESS CONTROL AND ALARM MONITORING SYSTEM
ACT	ACOUSTICAL CEILING TILE
ADA	AMERICANS WITH DISABILITIES ACT
AFC	ABOVE FINISHED CEILING
AFF	ABOVE FINISHED FLOOR
ALS	ASSISTIVE LISTENING SYSTEM
ANT	ANTENNA
ARF	ABOVE RAISED FLOOR
AVC	AUDIOVISUAL CONTRACTOR
AWG	AMERICAN WIRE GAUGE
BAS	BUILDING AUTOMATION SYSTEM
BCT	BONDING CONDUCTOR FOR TELECOMMUNICATIONS
BDF	BUILDING DISTRIBUTION FACILITY
BFC	BELOW FINISHED CEILING
BICSI	BUILDING INDUSTRIES CONSULTING SERVICES INTERNATIONAL
C	CONDUIT
CAM	CAMERA
CAT3	CATEGORY 3 (UTP CABLE)
CAT5E	ENHANCED CATEGORY 5 (UTP CABLE)
CAT6	CATEGORY 6 (UTP CABLE)
CAT6A	AUGMENTED CATEGORY 6 (UTP CABLE)
CATV	COMMUNITY ANTENNA TELEVISION
CATVP	COMM. ANTENNA TELEVISION PLENUM
CB	CEILING BOX
CMP	COMMUNICATIONS MEDIA PLENUM
CMR	COMMUNICATIONS MEDIA RISER
CP	CONTROL PANEL
CPU	CENTRAL PROCESSING UNIT
CTL	CONTROL
D	DEEP (DIMENSION)
DAS	DISTRIBUTED ANTENNA SYSTEM
DIV	DIVISION
DOC	VIDEO DOCUMENT CAMERA
DSP	DIGITAL SIGNAL PROCESSOR
(E)	EXISTING
EC	ELECTRICAL CONTRACTOR
EMS	ELECTRICAL MANAGEMENT SYSTEM
EMT	ELECTRICAL METALLIC TUBING
EQUIP	EQUIPMENT
(F)	FUTURE
FACP	FIRE ALARM CONTROL PANEL
FATC	FIRE ALARM TERMINAL CABINET
FB	FLOOR BOX
FO	FIBER OPTIC
FPD	FLAT PANEL DISPLAY
FTP	FOIL (SCREENED PER PAIR) TWISTED PAIR
GC	GENERAL CONTRACTOR
GRS	GALVANIZED RIGID STEEL
H	HIGH (DIMENSION)
IDF	INTERMEDIATE DISTRIBUTION FACILITY
IDS	INTRUSION DETECTION SYSTEM
IR	INFRARED
ISP	INSIDE PLANT
JB	JUNCTION BOX
L	LONG (DIMENSION)
LV	LOW VOLTAGE
LVI	LOW VOLTAGE INTERFACE
MBGRB	MAIN BUILDING GROUNDING REFERENCE BUS
MDF	MAIN DISTRIBUTION FACILITY
MH	MAINTENANCE HOLE
MIC	MICROPHONE
MM	MULTIMODE (FIBER TYPE)
MPOE	MINIMUM POINT OF ENTRY
MTR	MAIN TELECOMMUNICATIONS ROOM
MTX	MATRIX
(N)	NEW
NC	NORMALLY CLOSED (SWITCH TYPE)
NIC	NOT IN CONTRACT
NPF	NETWORK PATCHING FACILITY
NO	NORMALLY OPEN (SWITCH TYPE)
NTS	NOT TO SCALE
OC	ON CENTER
OFCI	OWNER FURNISHED, CONTRACTOR INSTALLED
OFCP	OPTICAL FIBER CONDUCTIVE PLENUM
OFCR	OPTICAL FIBER CONDUCTIVE RISER
OFE	OWNER FURNISHED EQUPMENT
OFOI	OWNER FURNISHED, OWNER INSTALLED
OFNP	OPTICAL FIBER NON-CONDUCTIVE PLENUM
OFNR	OPTICAL FIBER NON-CONDUCTIVE RISER
OSP	OUTSIDE PLANT
(P)	PROTECTED SIDE OF DOOR
PB	PULL BOX
PNL	PANEL
PR	PAIR (OF COPPER CONDUCTORS)
PRJ	PROJECTOR
PS	PROJECTION SCREEN
PSU	POWER SUPPLY UNIT
PT	POKE-THROUGH DEVICE
PTZ	PAN/TILT/ZOOM (CAMERA)
PVC	POLYVINYL CHLORIDE
REX	REQUEST TO EXIT
RF	RADIO FREQUENCY
RX	RECEIVER
SAD	SEE ARCHITECTURAL DRAWINGS
SEC	SECURITY EQUIPMENT CABINET
SED	SEE ELECTRICAL DRAWINGS
SM	SINGLEMODE (FIBER TYPE)
SPK	LOUDSPEAKER
SCTP	SCREENED (OVERALL) TWISTED PAIR
STR	STRANDS (OF FIBER OPTIC CABLE)
STP	SHIELDED (PAIRS AND OVERALL) TWISTED PAIR
TBB	TELECOM BONDING BACKBONE
TBC	TELECOM BONDING CONDUCTOR
TC	TELECOM CONTRACTOR
TDMM	TELECOMMUNICATIONS DISTRIBUTION METHODS MANUAL
TGB	TELECOM GROUNDING BUSBAR
TIA	TELECOMMUNICATIONS INDUSTRY ASSOCIATION
TMGB	TELECOM MAIN GROUNDING BUSBAR
TP	TERMINAL PANEL
TR	TELECOMMUNICATIONS ROOM
TS	TERMINATION STRIP
TVT	TV TUNER
TX	TRANSMITTER
TYP	TYPICAL
UON	UNLESS OTHERWISE NOTED
UPS	UNINTERRUPTIBLE POWER SUPPLY
UTP	UNSHIELDED TWISTED PAIR
V	VOLTS
VC	VOLUME CONTROL
VSS	VIDEO SURVEILLANCE SYSTEM
WAP	WIRELESS ACCESS POINT
W	WIDE (DIMENSION)
WB	WALL BOX
WP	WEATHERPROOF
XFMR	TRANSFORMER

GENERAL SYMBOLS

NOT ALL SYMBOLS MAY BE USED

- 01 — NUMBERED NOTE (SPECIFIC TO THE SHEET WHERE SHOWN)
- 01 — EQUIPMENT IDENTIFICATION TAG
- 001 — DOOR NUMBER
- XX — COMMUNICATIONS CONDUIT BANK TAG - REFER TO SCHEDULE

DETAIL REFERENCE

1 / X1.01 — DETAIL DESIGNATION; SHEET NUMBER (X = DISCIPLINE) (DASH SIGN = DETAIL FROM SAME SHEET)

ELEVATION REFERENCE

1 / X1.01 — DETAIL DESIGNATION; SHEET NUMBER (X = DISCIPLINE) (DASH SIGN = DETAIL FROM SAME SHEET)

MATCH LINE REFERENCE

MATCH LINE — X2.01 | X2.01 — CURRENT SHEET; CONTINUING SHEET (X = DISCIPLINE)

TELECOMMUNICATIONS

NOT ALL SYMBOLS MAY BE USED

- TELECOM OUTLET, WALL MOUNT
- TELECOM OUTLET, FLOOR MOUNT
- TELECOM OUTLET, CEILING MOUNT
- CABLE FEED POINT, WALL MOUNT
- CABLE FEED POINT, FLOOR MOUNT
- CABLE FEED POINT, CEILING MOUNT
- TELECOM + AV COMBINATION OUTLET/DEVICE, WALL MOUNT
- TELECOM + AV COMBINATION OUTLET/DEVICE, FLOOR MOUNT
- TELECOM + AV COMBINATION OUTLET/DEVICE, CEILING MOUNT

IDF/BDF-XXX — TELECOMMUNICATIONS ROOM / EQUIPMENT ROOM DESIGNATIONS

- ROOM SEQ. #
- TELECOMMUNICATIONS ROOM

TELECOMMUNICATIONS SERVING AREA DESIGNATION

OUTLETS AND DEVICES SERVED FROM TR-115 / OUTLETS AND DEVICES SERVED FROM TR-115-02

- AREA SERVED FROM THIS DESIGNATED TR
- SERVING AREA DELINEATOR
- AREA SERVED FROM THIS DESIGNATED TR

AUDIOVISUAL SYSTEMS

NOT ALL SYMBOLS MAY BE USED

- AV OUTLET/DEVICE, WALL MOUNT
- AV OUTLET/DEVICE, FLOOR MOUNT
- AV OUTLET/DEVICE, CEILING MOUNT

SECURITY SYSTEMS

NOT ALL SYMBOLS MAY BE USED

CR — CARD READER
- (BLANK) = STANDARD
- IL = INTEGRATED LOCK, CARD READER, REX AND CONTACT (4.1)
- K = WITH KEYPAD
- L = LONG RANGE
- M = MULLION MOUNT
- P = PEDESTAL MOUNT
- BR = BIOMETRIC READER

C — MAGNETIC DOOR CONTACT
- (BLANK) = STANDARD
- WG = WIDE GAP
- W = WIRELESS

RX — REX MOTION DETECTOR, WALL MOUNTED

RX — REX MOTION DETECTOR, CEILING MOUNTED

LA — LOCAL AUDIBLE ALARM (4.2)

EL — ELECTRICAL LOCKS
- DL = DETENTION LOCK
- ED = ELECTRIC EXIT DEVICE
- EDX = ELECTRIC EXIT DEVICE WITH REX
- EL = ELECTRIC MORTISE LOCK
- ELX = ELECTRIC MORTISE LOCK WITH REX
- ES = ELECTRIC STRIKE
- ML = MAGNETIC LOCK
- MLC = MAGNETIC LOCK WITH CONTACT
- MSL = MAGNETIC SHEAR LOCK

ELECTRIC HINGE

XXX — VIDEO CAMERA - FIXED; XXX = MOUNTING DETAIL IDENTIFIER (IF USED)

XXX — VIDEO CAMERA 180 - FIXED; XXX = MOUNTING DETAIL IDENTIFIER (IF USED)

VD — VIDEO RECORDER

MD — MOTION DETECTOR, WALL MOUNT

MD — MOTION DETECTOR, CEILING MOUNT

KP — KEYPAD

GENERAL NOTES

APPLIES TO ALL SHEETS IN THIS SET

GENERAL:

1. THE TECHNOLOGY DRAWINGS ARE A SUBSET OF A LARGER SET OF DRAWINGS. AS A SUBSET, WORK DESCRIBED IN THE TECHNOLOGY DRAWINGS REQUIRES REFERENCE TO DRAWINGS OF OTHER DISCIPLINES FOR A COMPLETE UNDERSTANDING OF THE TRUE SCOPE OF WORK. REFER TO THE COMPLETE DRAWING PACKAGE AND SPECIFICATIONS TO DETERMINE THE SCOPE OF THE WORK.
2. THE WORK, INCLUDING MATERIALS, METHODS, ASSEMBLIES, ETC., AND INCLUDING SEISMIC BRACING, SHALL COMPLY WITH OR EXCEED THE MINIMUM REQUIREMENTS OF THE GOVERNING LAWS, ORDINANCES, AND REGULATIONS OF AUTHORITIES HAVING JURISDICTION OVER THE WORK. ADDITIONALLY, THE CONTRACT DOCUMENTS MAY REQUIRE ADDITIONAL COMPLIANCE OVER AND ABOVE THOSE IDENTIFIED IN THIS SUBSET OF DRAWINGS. NO PART OF THIS SUBSET OF CONTRACT DOCUMENTS MAY BE CONSTRUED TO REQUIRE OR PERMIT WORK CONTRARY TO A GOVERNING LAW, ORDINANCE, REGULATION, OR CONTRACT DOCUMENTS ADDITIONAL TO THIS SUBSET.
3. MANAGE, SUPERVISE, REVIEW, AND COORDINATE THE WORK OF SUB-CONTRACTORS, TRADES, AND SUPPLIERS PER THE REQUIREMENTS OF THE CONTRACT DOCUMENTS PRIOR TO COMMENCING SPECIFIC WORK TO ASSURE EACH INDIVIDUAL PERFORMING THE WORK ARE AWARE AND UNDERSTAND THE REQUIREMENTS, REGARDLESS OF WHERE THE REQUIREMENTS OCCUR WITHIN THE CONTRACT DOCUMENTS.
4. MAINTAIN A COMPLETE COPY OF SPECIFICATIONS AND DRAWINGS AT THE JOB SITE. PRESENT THE SPECIFICATIONS AND DRAWINGS UPON REQUEST. MAINTAIN DAILY MARKUPS OF THE ACTUAL INSTALLATION AND PRESENT FOR REVIEW UPON REQUEST
5. SYMBOLOGY USED IN THE TECHNOLOGY DRAWINGS IS DIAGRAMMATIC AND NOT INTENDED TO IDENTIFY THE EXACT FIXED POSITION OF AN OUTLET OR DEVICE. THE ARCHITECTURAL DRAWINGS ESTABLISH THE FINISHED APPEARANCE AND EXACT LOCATION OF EXPOSED ELEMENTS OF THE WORK, INCLUDING WORK ILLUSTRATED ON THIS DRAWING SUBSET. REFER TO ARCHITECTURAL DRAWINGS FOR FINISHED LOCATIONS.
6. REFER TO SPECIFICATIONS FOR PROJECT SCOPE, GENERAL REQUIREMENTS, PRODUCT SPECIFICATIONS, AND INSTALLATION REQUIREMENTS, ETC. WHERE QUANTITY AND/OR QUALITY DIFFER FROM THE DRAWING SUBSET, THE HIGHER QUANTITY AND QUALITY OF EACH SHALL PREVAIL.
7. PROVIDE NECESSARY EQUIPMENT AND ACCESSORIES FOR FULLY FUNCTIONAL SYSTEMS MEETING THE DESIGN INTENT AND OWNER REQUIREMENTS, WHETHER EXPRESSLY SPECIFIED OR NOT.
8. PROVIDE MATERIALS AND EQUIPMENT LISTED BY UNDERWRITERS LABORATORIES FOR THE PURPOSE USED AND BEARING THEIR LABEL.
9. PRIOR TO PERFORMING WORK, IDENTIFY AND IMMEDIATELY NOTIFY THE OWNER, OR OWNER'S REPRESENTATIVE, IN WRITING OF ANY CONDITION THAT PREVENTS INSTALLATION ACCORDING TO DRAWINGS AND SPECIFICATIONS.
10. REMOVE ABANDONED CABLING, LEFT OVER CONDUIT, WIRE, SCRAPS, ETC. LEAVE PREMISES CLEAN AND FREE OF TRASH OR DEBRIS RESULTING FROM THE WORK. PROPERLY RECYCLE MATERIAL ACCORDING TO CODE AND PROJECT REQUIREMENTS.
11. INSTALL TELECOMMUNICATIONS SYSTEMS PER BICSI' TDMM, AND PER TIA 568 TELECOMMUNICATIONS STANDARDS (568 SERIES, 569 "TELECOMMUNICATIONS PATHWAYS AND SPACES", 606 STANDARD, 607, 758, AND 942).
12. WHEN IDENTIFIED ON THESE DRAWINGS, MOUNTING HEIGHTS ARE REFERENCED FROM THE FINISHED FLOOR TO THE CENTERLINE OF THE DEVICE OR OUTLET, UON.

POWER:

13. REFER TO DIVISION 26 FOR COORDINATION WITH POWER REQUIREMENTS.

PATHWAYS:

14. REFER TO T0.02 FOR PATHWAYS REQUIREMENTS (CONDUIT, BOXES, CABLE TRAY, CABLE HANGERS, SURFACE RACEWAY, ETC.).

CABLING AND DEVICES:

15. WHEN PULLING CABLES INTO CONDUITS AND/OR SLEEVES, FULLY OCCUPY A GIVEN CONDUIT AND/OR SLEEVE BEFORE MOVING TO THE NEXT (THIS WILL INCREASE UTILIZATION EFFICIENCY AND FUTURE FLEXIBILITY OF THE SPARE CONDUITS/SLEEVES). ADHERE TO FILL REQUIREMENTS PER INSTANCE.
16. ROUTE CABLES PERPENDICULAR OR PARALLEL TO BUILDING LINES. ROUTE CABLES NO LESS THAN 6 INCHES FROM AN ADJACENT POWER SOURCE OR LIGHTING FIXTURE, AND NO LESS THAN 4 FEET FROM A TRANSFORMERS OR MOTOR.
17. DO NOT ATTACH CABLES TO OTHER STRUCTURES NOT INTENDED FOR CABLE SUPPORT. DO NOT TIE CABLES TO CABLE TRAYS.
18. WHEN PLACING CABLES IN CABLE HANGERS, CABLE SAG BETWEEN HANGERS SHALL NOT BE CLOSER TO THE CEILING THAN 200-250 MILLIMETERS (8-10 INCHES).
19. LABEL EACH CABLE AT BOTH ENDS ACCORDING TO DRAWINGS AND/OR SPECIFICATIONS.

TELECOMMUNICATIONS ROOMS:

20. GROUP AND DRESS EXPOSED CABLE GROUPS USING VELCRO TYPE TIES, UON.
21. DO NOT INSTALL COMPONENTS (I.E., PIPING, DUCTWORK, PNEUMATIC TUBING, ETC.) WITHIN OR THAT PASS THROUGH TELECOMMUNICATIONS ROOMS NOT RELATED TO THE SUPPORT OF THE ROOMS' FUNCTION.
22. LOCATE PIPES AND OTHER TUBING COMPONENTS CONTAINING LIQUID OUTSIDE OF TELECOMMUNICATIONS ROOMS.

SECURITY:

23. REFER TO DIVISION 08 SPECIFICATIONS FOR DOOR HARDWARE REQUIREMENTS.
24. INTEGRATED DOOR HARDWARE (WHERE THE CARD READER IS INTEGRATED INTO THE DOOR HARDWARE) IS SPECIFIED BY DIVISION 8 AND COORDINATED WITH THE SECURITY CONTRACTOR TO ENSURE THE MODEL/OPTIONS OF THE HARDWARE WILL BE COMPATIBLE WITH THE SECURITY SYSTEM. (4.1)
25. REFER TO DIVISION 14 DRAWINGS AND SPECIFICATIONS FOR ELEVATOR REQUIREMENTS.
26. REPORT TO THE ENGINEER ANY OBSERVATIONS OF CONDITIONS DISCOVERED THAT WOULD PREVENT THE CORRECT INSTALLATION OF THE DESIGNED SYSTEM.
27. LABEL SECURITY CABLES ACCORDING TO SPECIFICATIONS. PROVIDE LABELS AT BOTH ENDS. VERIFY FORMAT AND INFORMATION FIELDS WITH AND RECEIVE APPROVAL FROM OWNER PRIOR TO LABELING.
28. LABEL SECURITY CONDUITS AT EACH END THAT IDENTIFIES THE DESTINATION AND USE AS "SECURITY". REFER TO T0.02 AND TO ELECTRICAL SPECIFICATIONS AND DRAWINGS FOR ADDITIONAL INFORMATION.
29. PENETRATION THRU FIRE RATED ASSEMBLY SHALL FOLLOW UL APPROVED ASSEMBLIES.

SHEET INDEX

SHEET NUMBER	SHEET TITLE	ISSUANCE LOG: RECORD SET
T0.01	TITLE SHEET	•
T0.02	PATHWAYS REQUIREMENTS	•
T0.03	ROUGH-IN SCHEDULE	•
T0.04	CABLING SCHEDULE	•
T0.11	DIAGRAM - BACKBONE PATHWAYS	•
T0.12	DIAGRAM - CABLING	•
T0.13	DIAGRAM - BONDING	•
T0.14	DIAGRAM - HORIZONTAL CABLE ROUTING	•
T0.21	DIAGRAM - SECURITY ACAMS, IDS	•
T0.22	DIAGRAM - SECURITY VSS	•
T0.23	DIAGRAM - SECURITY RISER	•
T0.31	DIAGRAM - AV FUNCTIONAL CLASSROOM TYPE A	•
T0.32	DIAGRAM - AV FUNCTIONAL NURSING CLASSROOM	•
T0.33	DIAGRAM - AV FUNCTIONAL SIM LAB / CONTROL	•
T2.01	FLOOR PLAN - FIRST FLOOR	•
T2.02	FLOOR PLAN - SECOND FLOOR	•
T3.01	REFLECTED CEILING PLAN - FIRST FLOOR	•
T3.02	REFLECTED CEILING PLAN - SECOND FLOOR	•
T4.01	ROOM PLAN - GENERAL DATA 117G	•
T4.02	ROOM PLAN - TELEPHONE 230	•
T4.11	ROOM PLAN - MATH LAB 202	•
T4.12	ROOM PLAN - CLASSROOM 203	•
T4.13	ROOM PLAN - CLASSROOM 212	•
T4.13A	ROOM ELEVATIONS - CLASSROOM 212	•
T4.14	ROOM PLAN - CLASSROOM 201A	•
T4.15	ROOM PLAN - CLASSROOM 201B	•
T4.16	ROOM PLAN - CLASSROOM 239D	•
T4.17	ROOM PLAN - SIM LAB / CONTROL	•
T5.01	INSTALLATION DETAILS - TELECOM	•
T5.21	INSTALLATION DETAILS - SECURITY CAMERAS	•
T5.22	INSTALLATION DETAILS - SECURITY DOORS	•
T5.31	INSTALLATION DETAILS - AV	•

ISSUE LOG KEY:
"•" ISSUED AS PART OF A SET

DATE
4/30/2019

tBP/Architecture
1777 Oakland Boulevard, Suite 320
Walnut Creek, CA 94596
ph: 925.246.6419
architect

TECOM
1333 Broadway, Suite 601
Oakland, CA 94612
510-337-2900
510-337-2904 fax
www.tecomcom
consultant

IDENTIFICATION STAMP
DIV. OF THE STATE ARCHITECT
OFFICE OF REGULATION SERVICES
APPL # 01-
FILE NO. 7-C1
AC ___ KS ___ SS ___
DATE ___

DIVISION OF THE STATE ARCHITECT
1515 CLAY STREET
OAKLAND, CA94612
ph:(510) 622-3101
agency

C-4008 APPLIED ARTS & ADMIN RENOVATION

2600 MISSION BELL DRIVE, SAN PABLO, CA 94806

CONTRA COSTA COMMUNITY COLLEGE DISTRICT
500 COURT STREET MARTINEZ, CA 94553
owner

tBP project number: 20865.00
file name:
drawn by: checked by:
date: July 06, 2018

rev:	date:	description:
	4/30/2019	RECORD SET

THIS DRAWING AND THE DESIGNS, DEPICTIONS, IDEAS AND OTHER INFORMATION CONTAINED HEREIN CONSTITUTE UNPUBLISHED WORK OF tBP/ARCHITECTURE AND SHALL REMAIN PROPERTY OF tBP/ARCHITECTURE IN PERPETUITY. NO PART THEREOF SHALL BE REPRODUCED, DISCLOSED, DISTRIBUTED, SOLD, PUBLISHED OR OTHERWISE USED IN ANY WAY WITHOUT THE ADVANCED EXPRESS WRITTEN CONSENT OF tBP/ARCHITECTURE.

drawing title: TITLE SHEET

drawing no.: T0.01

drawing of

Record Dwgs

TECHNOLOGY PATHWAYS REQUIREMENTS

APPLIES TO ALL SHEETS

CABLE HANGERS ("J HOOKS")

1. INSTALL CABLE HANGERS ACCORDING TO STATE CODES, LOCAL CODES AND REGULATORY REQUIREMENTS FOR SEISMIC BRACING. INSTALL CABLE HANGERS PER TIA-569-B AND BICSI TDMM.
2. PROVIDE DEDICATED SUPPORTS (WIRES AND/OR RODS) FOR CABLE HANGERS - DO NOT SHARE WITH CEILING SUPPORT WIRES. PROVIDE IDENTIFICATION ONTO DEDICATED SUPPORTS, SUCH AS BLUE COLORING, TAGGING, OR OTHER EFFECTIVE MEANS.
3. COORDINATE CABLE HANGER INSTALLATION WITH OTHER TRADES. FIELD DETERMINE CABLE HANGER ROUTES TO SUIT FIELD CONDITIONS, UNLESS SPECIFICALLY SHOWN WITH DIMENSIONS.
4. AT FULL HEIGHT WALLS, PROVIDE SLEEVES TO ALLOW CABLES TO PASS. REFER TO THE "THROUGH PENETRATIONS" TABLE FOR APPROVED UL SYSTEMS WHEN PENETRATING FIRE BARRIERS, SMOKE BARRIERS, AND/OR SMOKE PARTITIONS.
5. INSTALL CABLE HANGERS AND CABLING IN ACCORDANCE WITH THE GUIDE DIAGRAM BELOW:

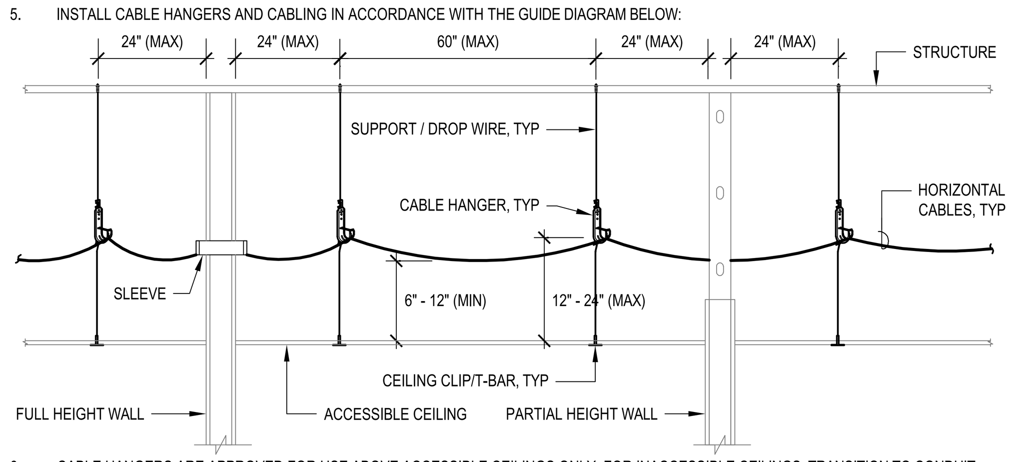

6. CABLE HANGERS ARE APPROVED FOR USE ABOVE ACCESSIBLE CEILINGS ONLY. FOR INACCESSIBLE CEILINGS, TRANSITION TO CONDUIT.

SURFACE RACEWAY

1. PROVIDE SURFACE RACEWAY ACCORDING TO STATE CODES, LOCAL CODES AND REGULATORY REQUIREMENTS FOR SEISMIC BRACING. INSTALL SURFACE RACEWAY PER TIA-569-B AND BICSI TDMM.
2. PROVIDE CABLE FEEDS DEDICATED TO NETWORK/LOW VOLTAGE/SIGNAL.
3. WHERE SURFACE RACEWAY SUPPORTS POWER AND NETWORK/LOW VOLTAGE/SIGNAL, COORDINATE THE INSTALLATION BETWEEN THE TRADES, INCLUDING SCOPES, SEQUENCES, SEPARATION, ETC.
4. ALIGN THE CABLE FEEDS TO THE ASSIGNED CHANNEL - THE FOLLOWING DIAGRAM IS AN EXAMPLE OF CHANNEL ALIGNMENT:

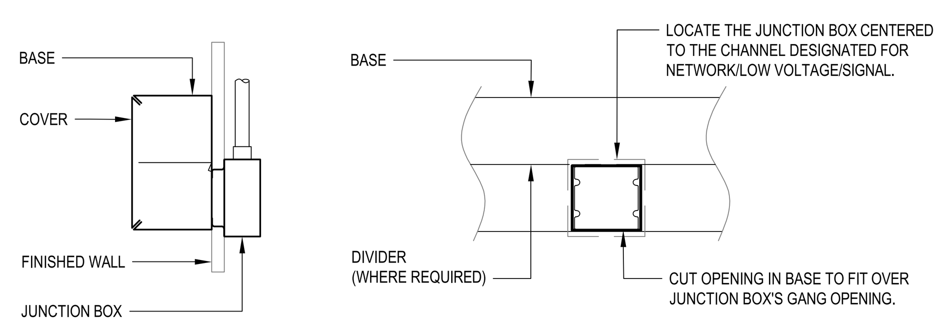

SEISMIC NOTES

MEP COMPONENT ANCHORAGE NOTE

ALL MECHANICAL, PLUMBING, AND ELECTRICAL COMPONENTS SHALL BE ANCHORED AND INSTALLED PER THE DETAILS ON THE DSA APPROVED CONSTRUCTION DOCUMENTS. WHERE NO DETAIL IS INDICATED, THE FOLLOWING COMPONENTS SHALL BE ANCHORED OR BRACED TO MEET THE FORCE AND DISPLACEMENT REQUIREMENTS PRESCRIBED IN THE 2016 CBC, SECTIONS 1616A.1.18 THROUGH 1616A.1.26 AND ASCE 7-10 CHAPTER 13, 26 AND 30.

1. ALL PERMANENT EQUIPMENT AND COMPONENTS.
2. TEMPORARY OR MOVABLE EQUIPMENT THAT IS PERMANENTLY ATTACHED (E.G. HARD WIRED) TO THE BUILDING UTILITY SERVICES SUCH AS ELECTRICITY, GAS OR WATER.
3. MOVABLE EQUIPMENT WHICH IS STATIONED IN ONE PLACE FOR MORE THAN 8 HOURS AND HEAVIER THAN 400 POUNDS OR HAS A CENTER OF MASS LOCATED 4 FEET OR MORE ABOVE THE ADJACENT FLOOR OR ROOF LEVEL THAT DIRECTLY SUPPORT THE COMPONENT ARE REQUIRED TO BE ANCHORED WITH TEMPORARY ATTACHMENTS.

THE FOLLOWING MECHANICAL AND ELECTRICAL COMPONENTS SHALL BE POSITIVELY ATTACHED TO THE STRUCTURE, BUT THE ATTACHMENT NEED NOT BE DETAILED ON THE PLANS. THESE COMPONENTS SHALL HAVE FLEXIBLE CONNECTIONS PROVIDED BETWEEN THE COMPONENT AND ASSOCIATED DUCTWORK, PIPING, AND CONDUIT.

A. COMPONENTS WEIGHING LESS THAN 400 POUNDS AND HAVE A CENTER OF MASS LOCATED 4 FEET OR LESS ABOVE THE ADJACENT FLOOR OR ROOF LEVEL THAT DIRECTLY SUPPORT THE COMPONENT.
B. COMPONENTS WEIGHING LESS THAN 20 POUNDS, OR IN THE CASE OF DISTRIBUTED SYSTEMS, LESS THAN 5 POUNDS PER FOOT, WHICH ARE SUSPENDED FROM A ROOF OR FLOOR OR HUNG FROM A WALL.

FOR THOSE ELEMENTS THAT DO NOT REQUIRE DETAILS ON THE APPROVED DRAWINGS, THE INSTALLATION SHALL BE SUBJECT TO THE APPROVAL OF THE DESIGN PROFESSIONAL IN GENERAL RESPONSIBLE CHARGE OR STRUCTURAL ENGINEER DELEGATED RESPONSIBILITY AND THE DSA DISTRICT STRUCTURAL ENGINEER. THE PROJECT INSPECTOR WILL VERIFY THAT ALL COMPONENTS AND EQUIPMENT HAVE BEEN ANCHORED IN ACCORDANCE WITH ABOVE REQUIREMENTS.

PIPING, DUCTWORK, AND ELECTRICAL DISTRIBUTION SYSTEM BRACING NOTE

PIPING, DUCTWORK, AND ELECTRICAL DISTRIBUTION SYSTEMS SHALL BE BRACED TO COMPLY WITH THE FORCES AND DISPLACEMENTS PRESCRIBED IN ASCE 7-10 SECTION 13.3 AS DEFINED IN ASCE 7-10 SECTION 13.6.5.6, 13.6.7, 13.6.8, AND 2016 CBC, SECTIONS 1616A.1.24, 1616A.1.25 AND 1616A.1.26.

THE METHOD OF SHOWING BRACING AND ATTACHMENTS TO THE STRUCTURE FOR THE IDENTIFIED DISTRIBUTION SYSTEM ARE AS NOTED BELOW. WHEN BRACING AND ATTACHMENTS ARE BASED ON PREAPPROVED INSTALLATION GUIDE (E.G., SMACNA OR OSHPD OPM), COPIES OF THE BRACING SYSTEM INSTALLATION GUIDE OR MANUAL SHALL BE AVAILABLE ON THE JOBSITE PRIOR TO THE START OF AND DURING THE HANGING AND BRACING OF THE DISTRIBUTION SYSTEMS. THE STRUCTURAL ENGINEER OF RECORD SHALL VERIFY THE ADEQUACY OF THE STRUCTURE TO SUPPORT THE HANGER AND BRACE LOADS.

MECHANICAL (MP), MECHANICAL DUCTS (MD), PLUMBING PIPING (PP), ELECTRICAL DISTRIBUTION SYSTEMS (E):

MP ☐ MD ☐ PP ☐ E ☒ -OPTION 1: DETAILED ON THE APPROVED DRAWINGS WITH THE PROJECT SPECIFIC NOTES AND DETAILS.

MP ☐ MD ☐ PP ☐ E ☐ -OPTION 2: SHALL COMPLY WITH THE APPLICABLE OSHPD PRE-APPROVAL (OPM #)

MP ☐ MD ☐ PP ☐ -OPTION 3: SHALL COMPLY WITH THE SMACNA SEISMIC RESTRAINT MANUAL OSHPD EDITION (2009), INCLUDING ANY ADDENDA. FASTENERS AND OTHER ATTACHMENTS NOT SPECIFICALLY INDENTIFIED IN THE SMACNA SEISMIC RESTRAINT MANUAL, OSHPD EDITION, ARE DETAILED ON THE APPROVED DRAWINGS WITH PROJECT SPECIFIC NOTES AND DETAILS. THE DETAILS SHALL ACCOUNT FOR THE APPLICABLE SEISMIC HAZARD LEVEL______ AND CONNECTION LEVEL______ FOR THE PROJECT AND CONDITIONS.

CABLE TRAY SYSTEMS

1. PROVIDE CABLE TRAY SYSTEMS ACCORDING TO STATE CODES, LOCAL CODES AND REGULATORY REQUIREMENTS, INCLUDING SEISMIC BRACING. INSTALL CABLE TRAY SYSTEMS PER TIA-569-D AND BICSI TDMM.
2. SUPPORT/SUSPENSION METHODS: THE SUPPORT/SUSPENSION METHODS BELOW ARE APPROVED FOR LADDER, TROUGH, AND WIRE MESH CABLE TRAY TYPES ON THIS PROJECT.

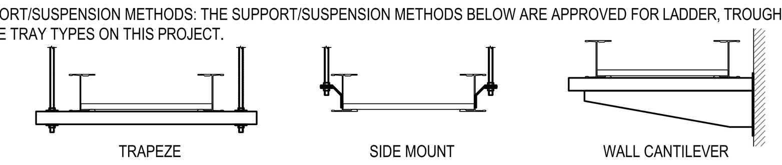

3. CABLE TRAY SYSTEMS MAY SHARE SUPPORT/SUSPENSION SYSTEMS WITH OTHER TRADES/SYSTEM, SUCH AS TRAPEZE SUPPORTS. IF SHARED, COORDINATE ROUTES AND CONFIGURATIONS WITH OTHER TRADES.
4. SUBMIT SEISMIC CALCULATIONS FOR SUPPORTS (REGARDLESS OF DEDICATED OR SHARED).
5. CABLE TRAY ROUTING SHOWN IS DIAGRAMMATIC, UNLESS SPECIFICALLY SHOWN WITH DIMENSIONS. FIELD DETERMINE CABLE TRAY ROUTES TO SUIT FIELD CONDITIONS WHILE CONFORMING TO THE DESIGN INTENT, DRAWINGS, AND SPECIFICATIONS. COORDINATE CABLE TRAY SYSTEM INSTALLATION WITH OTHER TRADES.
6. ROUTE CABLE TRAYS PARALLEL TO BUILDING LINES WHERE POSSIBLE.
7. ACCESSIBLE: CABLE TRAYS SHALL BE ACCESSIBLE (ALSO PER 392.18(E)).
8. FOR SPANS GREATER THAN 2-3 METERS (7-10 FEET) OVER INACCESSIBLE CEILINGS (E.G., HARD LID CEILING), TRANSITION CABLE TRAY TO CONDUIT, UON. TRANSITION CONDUITS' LOADING AREA SHALL EQUAL OR EXCEED CABLE TRAY'S LOADING AREA - ADHERE TO MAXIMUM FILL REQUIREMENTS AND TO "CABLE TRAY TRANSITION EQUIVALENCY TABLE". PROVIDE ONE ADDITIONAL SPARE CONDUIT OF SAME SIZE.
9. DO NOT CHANGE CABLE TRAY DIRECTION OVER A INACCESSIBLE CEILING.
10. PENETRATIONS: FOR EACH PENETRATION THROUGH FIRE BARRIERS, SMOKE BARRIERS, AND SMOKE PARTITIONS, PROVIDE APPROVED AND UL LISTED FOR THE APPLICATION FIRE STOP SYSTEMS TO MAINTAIN THE FIRE SEPARATION RATING. COORDINATE REQUIREMENTS WITH AUTHORITY HAVING JURISDICTION PRIOR TO INSTALLATION. MIXING PRODUCTS BETWEEN MANUFACTURED ASSEMBLIES IS PROHIBITED.
11. STRUCTURAL JOINT: AT STRUCTURAL JOINT CROSSINGS, TRUNCATE CABLE TRAY AND PROVIDE SEPARATION PER STRUCTURAL REQUIREMENTS TO ACCOMMODATE THE CALCULATED DEFLECTION. IF SEPARATION IS GREATER THAN 12 INCHES, PROVIDE CABLE HANGERS TO SUPPORT CABLES BETWEEN TRAY SECTIONS.
12. EXPANSION JOINTS: WHERE REQUIRED (SUCH AS OUTDOOR INSTALLATIONS), PROVIDE THERMAL EXPANSION JOINTS AT INTERVALS TO ACCOMMODATE THE CALCULATED EXPANSION.
13. BOND CABLE TRAY SYSTEM TO APPROVED GROUNDING POINT. BOND SECTIONS AND FITTINGS AT JUNCTIONS.
14. BEND RADIUS: CABLE TRAY FITTINGS SHALL HAVE A BEND RADIUS OF 12 INCHES.
15. CABLE TRAY DEPTH REFERS TO LOADING DEPTH.
16. CLEARANCES: CABLE TRAY SYSTEMS REQUIRE SIDE AND TOP ACCESS (TO PLACE CABLES INTO THE TRAY). INSTALL CABLE TRAY SYSTEMS TO MEET THE FOLLOWING MINIMUM CLEARANCE REQUIREMENTS:

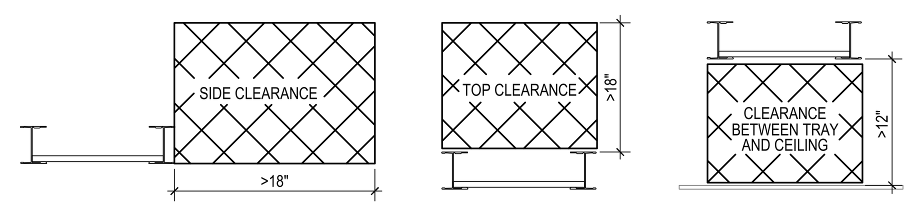

LIMITED ENCROACHMENTS TO THE REQUIRED CLEARANCES WILL BE ALLOWED WHEN THE SPAN OF THE ENCROACHMENT IS LESS THAN 2 METERS (6 FEET) - FOR EXAMPLE, A MECHANICAL DUCT MAY PASS DIRECTLY OVER THE TRAY.

17. CABLE TRAY -TO- SLEEVE ALIGNMENT: WHEN TRANSITIONING FROM CABLE TRAY TO SLEEVES (E.G., TO PENETRATE A FULL HEIGHT PARTITION), ALIGN THE SLEEVES TO THE TRAY PER THE TOLERANCES DESCRIBED BELOW. THESE ALIGNMENT REQUIREMENTS APPLIES TO EZ-PATH SLEEVES, SPEEDSLEEVES, AND EMT SLEEVES.

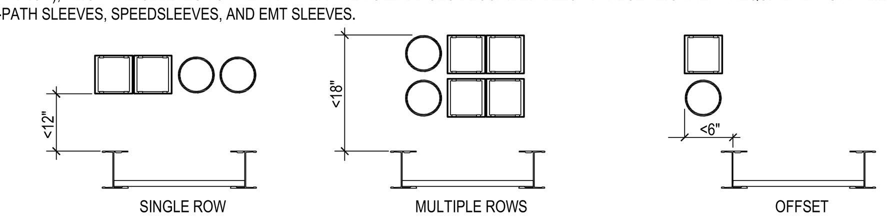

18. SLEEVE FILL SEQUENCE: WHEN FILLING/OCCUPYING SLEEVES, FILL FROM THE CENTER SLEEVE TO THE OUTER SLEEVES AND THE BOTTOM ROW BEFORE THE TOP ROW.

CABLE TRAY -TO- SLEEVE TRANSITION EQUIVALENCY TABLE

THE TABLE BELOW LISTS THE EQUIVALENCIES BETWEEN CABLE TRAY LOADING AREA AND THE CORRESPONDING QUANTITY OF SLEEVES - EMT AND/OR RATED. APPLY THIS TABLE TO DETERMINE THE REQUIRED QUANTITY OF SLEEVES PER CABLE TRAY LOADING AREA WHEN TRANSITIONING FROM TRAY TO SLEEVES (E.G., TO PASS THROUGH FULL HEIGHT WALLS).

ALSO REFER TO THE "THROUGH PENETRATIONS" TABLE FOR APPROVED UL SYSTEMS WHEN PENETRATING FIRE BARRIERS, SMOKE BARRIERS, AND/OR SMOKE PARTITIONS.

TRAY-TO-SLEEVE EQUIVALENCY CHART

CABLE TRAY					EQUIVALENT SLEEVE QUANTITY													
LOADING DIMENSIONS (IN) W		H	LOADING AREA (SQ-IN)	CAPACITY -50% MAX FILL (SQ-IN)	STI EZ-PATH 44+	STI EZ-PATH 33	STI EZ-PATH 22	HILTI SPEEDSLEEVE, 4"	HILTI SPEEDSLEEVE, 2"	STI EZ-PATH S&A	LEGRAND FLAMESTOPPER, 4"	LEGRAND FLAMESTOPPER, 2"	3M PASS-THROUGH, 4" SQ	3M PASS-THROUGH, 4" RD	3M PASS-THROUGH, 2" RD	4" EMT SLEEVE	3" EMT SLEEVE	2" EMT SLEEVE
6	x	2	12	6	1	2	10	2	6	3	2	5	1	2	6	2	2	5
9	x	2	18	9	2	3	15	2	9	4	2	8	2	3	9	2	3	7
12	x	2	24	12	2	4	20	3	12	5	3	10	2	3	11	3	4	9
18	x	2	36	18	3	6	29	4	18	7	4	15	3	5	17	4	6	14
6	x	3	18	9	2	3	15	2	9	4	2	8	2	3	9	2	3	7
9	x	3	27	13.5	3	5	22	3	14	6	3	11	3	4	13	3	4	11
12	x	3	36	18	3	6	29	4	18	7	4	15	3	5	17	4	6	14
18	x	3	54	27	5	9	44	6	27	11	6	22	5	7	25	5	8	21
24	x	3	72	36	6	12	58	7	36	14	8	29	6	9	33	7	11	27
30	x	3	90	45	8	15	72	9	45	17	10	37	8	11	41	8	13	34
36	x	3	108	54	9	18	87	11	54	21	12	44	9	13	49	10	16	41
6	x	4	24	12	2	4	20	3	12	5	3	10	2	3	11	3	4	9
9	x	4	36	18	3	6	29	4	18	7	4	15	3	5	17	4	6	14
12	x	4	48	24	4	8	39	5	24	9	6	20	4	6	22	5	7	18
18	x	4	72	36	6	12	58	7	36	14	8	29	6	9	33	7	11	27
24	x	4	96	48	8	16	77	9	48	18	11	39	8	11	44	9	14	36
30	x	4	120	60	10	20	96	12	59	23	13	49	10	14	55	11	17	45
36	x	4	144	72	12	24	116	14	71	27	16	58	12	17	66	13	21	54
6	x	5	30	15	3	5	24	3	15	6	4	13	3	4	14	3	5	12
9	x	5	45	22.5	4	8	36	5	23	9	5	19	4	6	21	4	7	17
12	x	5	60	30	5	10	48	6	30	12	7	25	5	7	28	6	9	23
18	x	5	90	45	8	15	72	9	45	17	10	37	8	11	41	8	13	34
24	x	5	120	60	10	20	96	12	59	23	13	49	10	14	55	11	17	45
30	x	5	150	75	12	25	120	14	74	28	17	61	13	17	68	13	22	56
36	x	5	180	90	15	30	144	17	89	34	20	73	15	21	82	16	26	68
6	x	6	36	18	3	6	29	4	18	7	4	15	3	5	17	4	6	14
9	x	6	54	27	5	9	44	6	27	11	6	22	5	7	25	5	8	21
12	x	6	72	36	6	12	58	7	36	14	8	29	6	9	33	7	11	27
18	x	6	108	54	9	18	87	11	54	21	12	44	9	13	49	10	16	41
24	x	6	144	72	12	24	116	14	71	27	16	58	12	17	66	13	21	54
30	x	6	180	90	15	30	144	17	89	34	20	73	15	21	82	16	26	68
36	x	6	216	108	18	36	173	21	107	41	24	87	18	25	98	19	31	81

INSIDE PLANT CONDUIT SYSTEMS

1. PROVIDE CONDUIT SYSTEMS, PULL BOXES, JUNCTION BOXES, DEVICE BOXES, OUTLET BOXES, PATHWAYS, SEISMIC BRACING, AND OTHER INFRASTRUCTURE SYSTEMS ACCORDING TO LOCAL CODES, REGULATORY REQUIREMENTS, TIA 569, AND BICSI TDMM.
2. CONDUIT ROUTING SHOWN IS DIAGRAMMATIC UNLESS SPECIFICALLY SHOWN WITH DIMENSIONS. DETERMINE FINAL CONDUIT ROUTES TO SUIT FIELD CONDITIONS WHILE CONFORMING TO THE DESIGN INTENT, DRAWINGS, AND SPECIFICATIONS. COORDINATE THE CONDUIT SYSTEM INSTALLATION REQUIREMENTS WITH OTHER TRADES.
3. FOR EACH PENETRATION THROUGH FIRE BARRIERS AND SMOKE BARRIERS, PROVIDE APPROVED UL LISTED FIRE STOP SYSTEMS (SEE "THROUGH PENETRATIONS" MATRIX ON THIS SHEET) TO MAINTAIN THE SEPARATION RATING. COORDINATE REQUIREMENTS WITH AUTHORITY HAVING JURISDICTION PRIOR TO INSTALLATION.
4. PROVIDE DEFLECTION FITTINGS AT STRUCTURAL EXPANSION JOINT CROSSINGS.
5. PROVIDE DEDICATED SUPPORTS (DO NOT SHARE SUPPORTS WITH OTHER TRADES/SYSTEMS OTHER THAN SYSTEMS IDENTIFIED IN THIS SET OF DRAWINGS) FOR CONDUIT SYSTEMS/DUCT BANKS INTENDED FOR LOW VOLTAGE SYSTEM CABLES, UNLESS APPROVED BY THE ENGINEER.
6. PREPARE SHOP DRAWINGS SHOWING THE FOLLOWING:
   - CONDUIT/DUCT BANK ROUTES, SHOWING CONDUIT TYPES, SIZES, AND QUANTITIES
   - PER PENETRATION (E.G., FLOORS, FRAMED WALLS, CONCRETE WALLS, ETC.), INDICATE PENETRATION TYPE (E.G., EMT SLEEVE, UL FIRESTOPPING SYSTEM, SMOKE BARRIER, ETC.), SIZE, AND QUANTITY
   - PER PULL BOX LOCATION, INDICATE BOX TYPE, SIZE, CONFIGURATION, AND RELATED INSTALLATION DETAILS
   - PER OUTLET, DEVICE, BACK BOX, AND JUNCTION BOX LOCATION, INDICATE BOX TYPE, SIZE, CONFIGURATION, AND RELATED INSTALLATION DETAILS
7. ROUTE CONDUITS/DUCT BANKS PARALLEL TO BUILDING LINES WHERE POSSIBLE.
8. CONDUIT RUNS SHALL HAVE NO MORE THAN 180 TOTAL DEGREES OF BENDS BETWEEN PULL BOXES, AND NO SINGLE BEND SHALL EXCEED 90 DEGREES. OPTION: IF ADDITIONAL BENDS ARE REQUIRED, INCREASE THE CONDUIT RUN ONE TRADE SIZE WHILE NOT EXCEEDING 270 DEGREES TOTAL. IF THE LAST BEND IS WITHIN 12 INCHES OF THE CONDUIT END, THEN THE INCREASE IN TRADE SIZE IS NOT REQUIRED DUE TO THAT SPECIFIC BEND. IF THE OVERALL LENGTH OF THE CONDUIT RUN IS LESS THAN 75 FEET, THEN A THIRD 90 DEGREE BEND IS ALLOWED.
9. WHEN ROUTING CONDUIT IN CONCRETE, PLACE CONDUITS INTO FORMS WITH A GRADUATED BEND RADIUS OF 40 TIMES THE CONDUIT SIZE TO MITIGATE CAPACITY REDUCTION. THE USE OF 90-DEGREE ELBOWS IS PROHIBITED, OTHER THAN TURNING UP OR DOWN OUT OF CONCRETE, UNLESS PRIOR AUTHORIZATION IS RECEIVED IN WRITING FROM THE OWNER/OWNER'S REPRESENTATIVE OR THE ENGINEER.
10. CONDUIT BENDS SHALL NOT EXCEED THE FOLLOWING RADII:
    - CONDUITS LESS THAN 2-INCH TRADE SIZE: SIX TIMES THE INSIDE DIAMETER
    - CONDUITS 2-INCH OR GREATER TRADE SIZE: TEN TIMES THE INSIDE DIAMETER
11. FOR BACKBONE PATHWAYS, PROVIDE EMT TYPE 4-INCH TRADE SIZE CONDUIT, UON.
12. PROVIDE INSULATED OR GROUNDED BUSHINGS ON EXPOSED ENDS OF CONDUITS AND SLEEVES. BOND ONE END (NOT BOTH ENDS) OF CONTINUOUS CONDUIT RUNS TO THE APPROVED GROUNDING BUS SYSTEM.
13. REFER TO ROUGH-IN SCHEDULE FOR CONDUIT REQUIREMENTS. IF NOT EXPRESSLY STATED, PROVIDE ONE EMT TYPE 1-INCH TRADE SIZE CONDUIT AND ONE 4 11/16" SQUARE X 2 7/8" D (MIN) BOX FOR TELECOMMUNICATIONS OUTLETS.
14. PROVIDE A DEDICATED CONDUIT STUB PER OUTLET/DEVICE/BACK BOX. DAISY-CHAINING OUTLET BOXES IS PROHIBITED UNLESS SPECIFICALLY NOTED ON PLANS.
15. CONSOLIDATION OF WORK-AREA CONDUITS IS ALLOWED. THE CONSOLIDATED CONDUIT CAPACITY SHALL BE EQUAL TO OR GREATER THAN THE AGGREGATE CAPACITY OF THE WORK AREA CONDUITS. PROVIDE APPROVED JUNCTION AND OR PULL BOXES FOR CONDUIT CONSOLIDATION.
16. CONDUIT BODIES ("LB" FITTINGS, ETC.) ARE PROHIBITED FOR USE IN TELECOMMUNICATIONS AND AUDIOVISUAL SYSTEM PATHWAYS. THEY ARE ALLOWED FOR USE IN SECURITY SYSTEM PATHWAYS.
17. PROVIDE A PULL STRING IN EACH CONDUIT RUN BETWEEN CONDUIT ENDS; LEAVE WORKING SLACK IN THE PULL STRING AT EACH END; TIE OFF SLACK TO PREVENT RECOIL (BACK INTO THE CONDUIT). PULL STRINGS SHALL BE CONTINUOUS AND WITHOUT KNOTS, KINKS, ETC. PULL STRING STRENGTH SHALL BE 200 LB, MINIMUM.
18. WHEN BOXES FACE OPPOSITE SIDES OF FRAMED WALLS, INSTALL OUTLET/DEVICE/BACK BOXES WITH AT LEAST ONE STUD BAY OR 24 INCHES SEPARATION BETWEEN BOXES.
19. OVER INACCESSIBLE CEILINGS (E.G., HARD LID CEILING), PROVIDE CONDUITS FOR LOW VOLTAGE SYSTEMS CABLING, UON. WHEN TRANSITIONING FROM CABLE TRAY, REFER TO SIZING REQUIREMENTS LISTED UNDER "CABLE TRAY SYSTEMS" ON THIS SHEET.

PATHWAYS SYMBOLS

REFER TO FLOOR PLANS, RCPS, AND ROOM PLANS FOR SIZE, QUANTITY, AND LAYOUT

- CONDUIT RUN EXPOSED ON WALL OR CEILING
- CONDUIT RUN CONCEALED IN SLAB, UNDER SLAB OR UNDERGROUND
- CONDUIT RUN CONCEALED IN WALL OR CEILING
- CONDUIT TRUNCATED
- CONDUIT TURNED UP
- CONDUIT TURNED DOWN
- J — CABLE HANGER RUN
- CONDUIT SLEEVE (THROUGH WALL OR FLOOR)
- FIRESTOP SLEEVE (THROUGH WALL OR FLOOR)
- CABLE TRAY - LADDER
- CABLE TRAY - WIRE MESH
- CABLE TRAY - SINGLE RAIL
- CABLE TRAY - SOLID BOTTOM
- CABLE RUNWAY
- SURFACE RACEWAY (OUTLET/DEVICE SYMBOLS SHOWN FOR EXAMPLE ONLY)

THROUGH PENETRATIONS

THE TABLE BELOW LISTS THE FIRESTOPPING SYSTEMS APPROVED FOR PENETRATIONS OF FIRE BARRIERS AND SMOKE BARRIERS. APPLY THE PROPER UL SYSTEM TO THE BARRIER BEING PENETRATED AND THE PENETRANT TO MEET THE REQUIRED F AND T RATINGS. MIXING PRODUCTS AND/OR COMPONENTS BETWEEN SYSTEMS IS PROHIBITEDFOR QUANTITY OF SYSTEMS, REFER TO "CABLE TRAY -TO- SLEEVE TRANSITION EQUIVALENCY TABLE" (THIS SHEET).

SUBSTITUTIONS MAY BE ALLOWED. SUBMIT A SUBSTITUTION REQUEST FOR SYSTEMS DIFFERING FROM THOSE LISTED BELOW.

PENETRANT	UL SYSTEM #	F RATING	T RATING	COMMENTS
CONCRETE FLOORS AND WALLS				
SINGLE EZ-PATH SLEEVE	C-AJ-3260	1 HR OR 2 HR	0 HR OR 1/2 HR	F RATING = FLOOR / WALL RATING T RATING FOR >20% FILL
MULTIPLE EZ-PATH SLEEVES	F-A-3037	2 HR OR 3 HR	0 HR	APPLICABLE TO FLOORS: F RATING = FLOOR RATING
MULTIPLE EZ-PATH SLEEVES	F-A-3037 WITH DUCT WRAP	2 HR OR 3 HR	2 HR	F RATING = FLOOR RATING, T RATING REQUIRES TRK444 KIT OR DUCT WRAP
SINGLE CONDUIT	C-AJ-1353 (OR C-AJ-1080)	2 HR OR 3 HR (3 HR)	0 HR (0 HR)	-
MULTIPLE CONDUITS	C-AJ-8113	2 HR	0 HR	-
SINGLE CONDUIT IN FLOOR WITH CABLES	C-AJ-3216	2 HR	1/2 HR	CONDUITS SHALL MEET STRUCTURAL REQUIREMENTS FOR CAST-IN-PLACE
MULTIPLE CONDUITS IN FLOOR WITH CABLES	C-AJ-3216	2 HR	1/2 HR	CONDUITS SHALL MEET STRUCTURAL REQUIREMENTS FOR CAST-IN-PLACE
SINGLE CONDUIT IN WALL WITH CABLES	W-J-3199	2 HR	3/4 HR, 1 HR	-
MULTIPLE CONDUITS IN WALL WITH CABLES	W-J-3200	2 HR	1/4 HR	-
CABLES IN SLEEVE	C-AJ-8113 WITH WRAP	2 HR	4" OR LESS: 2 HR	T RATING REQUIRES COOLANT WRAP
CABLES IN SLEEVE	C-AJ-3154	2, 3, 4 HR	2 1/2-4": 1/4 HR 1-2": 1/2 HR	-
-	-	-	-	-
FRAMED WALLS				
SINGLE AND/OR MULTIPLE EZ-PATH SLEEVE(S)	W-L-3306	1 HR OR 2 HR	0 HR TO 2 HR	F RATING = WALL RATING T RATING - REFER TO UL DETAIL
SINGLE SPEEDSLEEVE (2" AND/OR 4")	W-L-3334	1 HR TO 4 HR	1 HR TO 4 HR	F RATING = WALL RATING T RATING - REFER TO UL DETAIL
MULTIPLE SPEEDSLEEVES (2" AND/OR 4")	W-L-3395	1 HR TO 2 HR	1/4 HR	F RATING = WALL RATING 16" GANGPLATE WITH 3 SPEEDSLEEVES, 24" GANGPLATE WITH 4 SPEEDSLEEVES
SINGLE SLEEVE KIT WITH PLUG (2" OR 4")	W-L-3394	1 HR OR 2 HR	0 HR, 3/4 HR, 1 Hr	F RATING = WALL RATING T RATING - REFER TO UL DETAIL
MULTIPLE SLEEVES KIT WITH PLUG (2" OR 4")	W-L-3395	1 HR OR 2 HR	1/4 HR	F RATING = WALL RATING
EMT SLEEVE WITH CABLES	W-L-3210	1 HR OR 2 HR	4" OR LESS: 3/4 HR	F RATING = WALL RATING
SINGLE EMT CONDUIT	W-L-1222	1 HR OR 2 HR	2 1/2"-4": 3/4 HR 1-2": 1 HR	F RATING = WALL RATING
MULTIPLE EMT CONDUITS	W-L-1168	1 HR OR 2 HR	1/4 HR	F RATING = WALL RATING
-	-	-	-	-

FOR PENETRATIONS OF FULL HEIGHT PARTITIONS ABOVE ACCESSIBLE CEILINGS, PROVIDE APPROVED RATED SLEEVES OR APPROVED FIRESTOP SYSTEM, UNLESS OTHERWISE NOTED. FOR PENETRATIONS ABOVE INACCESSIBLE CEILINGS, PROVIDE EMT CONDUIT THAT SPANS THE DISTANCE OF THE NON-ACCESSIBLE CEILING, INCLUDING THE PENETRATION THROUGH THE BARRIER. THE DIAGRAM BELOW CONCEPTUALLY ILLUSTRATES THE REQUIREMENT:

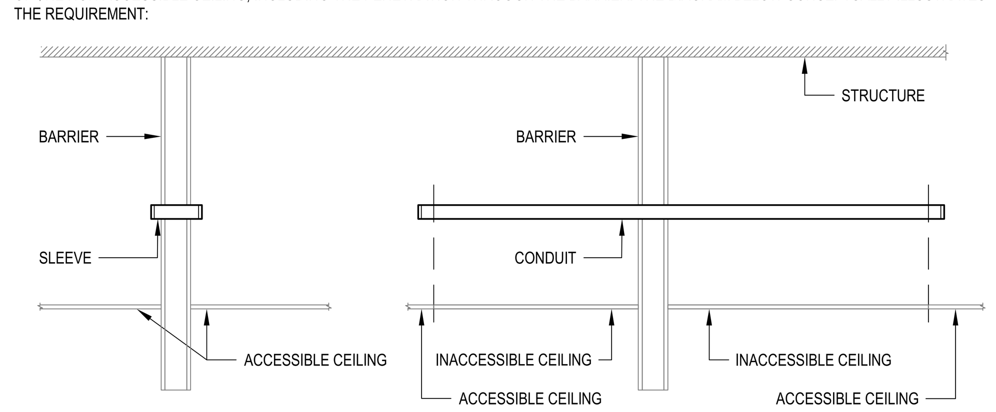

tBP architecture planning interiors
tBP/Architecture
1777 Oakland Boulevard, Suite 320
Walnut Creek, CA 94596
ph: 925.246.6419
architect

TEECOM
1333 Broadway, Suite 601
Oakland, CA 94612
510-337-2800
510-337-2804 fax
www.teecom.com
consultant

IDENTIFICATION STAMP
DIV. OF THE STATE ARCHITECT
OFFICE OF REGULATION SERVICES
APPL # 01-
FILE NO. 7-C1
AC ____ FLS ____ SS ____
DATE ____

DIVISION OF THE STATE ARCHITECT
1515 CLAY STREET
OAKLAND, CA94612
ph:(510) 622-3101
agency

C-4008 APPLIED ARTS & ADMIN RENOVATION
2600 MISSION BELL DRIVE, SAN PABLO, CA 94806

CONTRA COSTA COMMUNITY COLLEGE DISTRICT
500 COURT STREET MARTINEZ, CA 94553
owner

tBP project number: 20865.00
file name:
drawn by: checked by:
date: July 06, 2018

rev:	date:	description:
	4/30/2019	RECORD SET

THIS DRAWING AND THE DESIGNS, DEPICTIONS, IDEAS AND OTHER INFORMATION CONTAINED HEREIN CONSTITUTE UNPUBLISHED WORK OF tBP/ARCHITECTURE AND SHALL REMAIN PROPERTY OF tBP/ARCHITECTURE IN PERPETUITY. NO PART THEREOF SHALL BE REPRODUCED, DISCLOSED, DISTRIBUTED, SOLD, PUBLISHED OR OTHERWISE USED IN ANY WAY WITHOUT THE ADVANCED EXPRESS WRITTEN CONSENT OF tBP/ARCHITECTURE.

drawing title: PATHWAYS REQUIREMENTS

drawing no.: T0.02

drawing of

Record Dwgs

TECHNOLOGY SYSTEMS PATHWAY SERVICES ROUGH-IN SCHEDULE

SYMBOL	ATTRIBUTE	DESCRIPTION	SHARED SERVICES TEL	SHARED SERVICES AV	SHARED SERVICES ELEC	PATHWAY FEED	BOX TYPE	BOX COVER/RING	MOUNTING	DETAIL REFERENCE	NUMBERED COMMENTS
	INT	MULTISERVICE POKE-THRU - TELECOM, AV, POWER	●	●	●	TEL: (1) 1 1/4" CONDUIT AV: (2) 1 1/4" CONDUITS	FLOOR BOX (TYPE 2)	SEE DETAIL	FLUSH IN FLOOR	2/T5.31	1, 4 △A
	4S	MULTISERVICE FLOOR BOX - TELECOM, POWER	●		●	TEL: (1) 1 1/4" CONDUIT	FLOOR BOX, SEE ELECTRICAL	REFER TO ELECTRICAL	FLUSH IN FLOOR		4
C	C	FLOOR FEED POINT	●			(1) 1 1/4" CONDUIT	POKE THROUGH	ONE GANG	FLUSH IN FLOOR		1
C	C	WALL FEED POINT	●			(1) 1 1/4" CONDUIT	SQUARE BOX, 5"SQ x 2 7/8"D	ONE GANG	FLUSH IN WALL, +18" AFF		1
	1, 2, 2S, 3, 4S	TELECOM OUTLET - WALL MOUNTED	●			(1) 1 1/4" CONDUIT	SQUARE BOX, 5"SQ x 2 7/8"D	ONE GANG	FLUSH IN WALL, +18" AFF		1 △A
	2E	TELECOM OUTLET - WALL MOUNTED (EMERGENCY SPEAKER)	●			(2) 1 1/4" CONDUIT	(2) SQUARE BOX, 5"SQ x 2 7/8"D	ONE GANG	LOCATION OF BOXES TO BE COORDINATED WITH DISTRICT		1, 7
	BMS	COMMUNICATIONS OUTLET FOR BUILDING AUTOMATION SYSTEM CONNECTION	●			(1) 1 1/4" CONDUIT	SQUARE BOX, 5"SQ x 2 7/8"D	ONE GANG	FLUSH IN WALL, +18" AFF		2, 5 △A
	F1	FURNITURE OUTLET	●			FURNITURE SYSTEM RACEWAY	IN FURNITURE SYSTEM	N/A	FLUSH IN FURNITURE		2
	SEC	COMMUNICATIONS OUTLET SERVING SECURITY EQUIPMENT CABINET	●			(1) 1 1/4" CONDUIT	SURFACE MOUNT BOX	ONE GANG	SURFACE MOUNTED, WITHIN SECURITY EQUIPMENT CABINET		2
	W	WALL PHONE	●			(1) 1 1/4" CONDUIT	SQUARE BOX, 5"SQ x 2 7/8"D	ONE GANG △A	FLUSH IN WALL, +44" AFF		1
	2	TELECOM OUTLET - CEILING MOUNTED	●			(1) 1 1/4" CONDUIT/J-HOOKS	SQUARE BOX, 5"SQ x 2 7/8"D	ONE GANG	FLUSH TO CEILING		3
	WAP	WIRELESS ACCESS POINT	●			(1) 1 1/4" CONDUIT/J-HOOKS	SURFACE MOUNT BOX	N/A	ABOVE CEILING		6
	FPD	DISPLAY - FLAT PANEL	●	●		(1) 1 1/4" CONDUIT	SQUARE BOX, 4 11/16"SQ (OR 5"SQ) x 2 7/8"D	N/A	9' AFF		1
	INT	MEDIA INTERFACE		●		(2) 1 1/4" CONDUIT △A	4G MULTI-GANG BOX x 2 1/2" D	FOUR GANG	FLUSH IN WALL, 18" AFF		1, 5
	CAM	CAMERA - WALL MOUNT		●		(1) 1 1/4" CONDUIT	SQUARE BOX, 4 11/16"SQ x 2 1/8"D	ONE GANG	FLUSH IN WALL, 78" AFF	6/T5.31	1
	PI	PATIENT INFORMATION DISPLAY		●	●	(1) 1 1/4" CONDUIT	SQUARE BOX, 4 11/16"SQ x 2 1/8"D	ONE GANG	FLUSH IN WALL, 18" AFF		
	PJR	PROJECTOR - WALL MOUNTED		●		(1) 1 1/4" CONDUIT	SQUARE BOX, 4 11/16"SQ (OR 5"SQ) x 2 7/8"D	TWO GANG	FLUSH IN WALL		
	TP	TERMINAL PANEL - PULL BOX		●		(2) 1 1/4" CONDUIT	4G MULTI-GANG BOX x 2 1/2" D	DECORA COVER	FLUSH IN WALL, 18" AFF		
	MIC	MICROPHONE - CEILING MOUNT		●		NONE	NONE	INTEGRAL WITH LOUDSPEAKER	FLUSH IN CEILING		
	S	LOUDSPEAKER - CEILING MOUNT, ACCESSIBLE		●		NONE	LOUDSPEAKER BACK BOX	GRILLE	FLUSH IN CEILING	1/T5.31	
	PJR	PROJECTOR - CEILING MOUNTED		●		NONE	NONE	NONE	FLUSH IN CEILING	5/T5.31	
	CR	SECURITY CARD READER				(1) 1" CONDUIT	REFER TO DETAIL 1/T5.22	REFER TO DETAIL 1/T5.22			
	A, B	SECURITY CAMERA				(1) 1 1/4" CONDUIT / J-HOOKS	REFER TO DETAIL 1/T5.21	REFER TO DETAIL 1/T5.21			

NUMBERED COMMENTS:

1. PROVIDE CONDUIT STUB FROM ACCESSIBLE CEILING SPACE TO BOX; GENERALLY, TURN CONDUIT OUT WITHIN THE SAME ROOM. AVOID PENETRATING RATED BARRIERS – IF A PENETRATION THROUGH A RATED BARRIER IS REQUIRED, THEN MEET THROUGH PENETRATIONS REQUIREMENTS. PROVIDE A PULL STRING PER CONDUIT.
2. COORDINATE THE INSTALLATION WITH SPECIALTY EQUIPMENT CONTRACTOR (I.E., SECURITY, FIRE ALARM), INCLUDING OUTLET TYPE, INSTALLATION CONFIGURATION (LOCATION, HEIGHT, ETC.), AND CONNECTION TO EQUIPMENT.
3. INSTALL BOX ADJACENT TO POWER OUTLET. COORDINATE INSTALLATION WITH ELECTRICAL CONTRACTOR. SHARED BOX BRACKETS ARE ACCEPTABLE.
4. OUTLET/BOX SHARED WITH ELECTRICAL. REFER TO ELECTRICAL DRAWINGS FOR OUTLET TYPE AND INSTALLATION REQUIREMENTS. COORDINATE INSTALLATION WITH ELECTRICAL CONTRACTOR.
5. PRIOR TO ROUGH-IN, VERIFY WITH THE SYSTEM VENDOR DEVICE BOX AND COVER/RING TYPE AND SIZE REQUIREMENTS. THE BOX AND COVER/RING TYPE AND SIZE LISTED IN THIS SCHEDULE ARE DEFAULT.
6. WIRELESS ACCESS POINT IS OWNER FURNISHED OWNER INSTALLED. △A
7. OUTLET FOR EMERGENCY SPEAKERS, PROVIDE (2) BACKBOXES AT LOCATION COORDINATED WITH DISTRICT IT. ONE BOX FOR DATA TERMINATIONS AND ONE BOX FOR EMERGENCY PUSH BUTTON MOUNTED AT ADA APPROVED HEIGHT. STUB CONDUIT FROM BOXES TO ACCESSIBLE CEILING SPACE.

GENERAL COMMENTS:

A. HEIGHTS SHOWN IN THIS SCHEDULE ARE DEFAULT, U/ON. ALSO REFER TO ARCHITECTURAL DRAWINGS, PARTICULARLY ELEVATIONS, TO CONFIRM ROUGH-IN HEIGHTS. ALSO REFER TO TECHNOLOGY FLOOR PLANS, REFLECTED CEILING PLANS AND ROOM PLANS, WHICH MAY SPECIFY DIFFERENT HEIGHTS PER INSTANCE.
B. WHERE OUTLET/DEVICE IS SHARED WITH ELECTRICAL, REFER TO ELECTRICAL DRAWINGS FOR INSTALLATION REQUIREMENTS AND ADDITIONAL REQUIREMENTS.
C. PROVIDE BLANK INSERTS INTO UNUSED KNOCKOUTS.
D. PROVIDE LABELS ON CONDUITS AT BOTH ENDS.
E. AT RATED BARRIERS, PROVIDE FIRESTOPPING/SEALING AROUND BOX WHERE REQUIRED.

tBP
architecture
planning
interiors

tBP/Architecture
1777 Oakland Boulevard, Suite 320
Walnut Creek, CA 94596
ph: 925.246.6419

architect

TEECOM
1333 Broadway, Suite 601
Oakland, CA 94612
510-337-2800
510-337-2804 fax
www.teecom.com

consultant

IDENTIFICATION STAMP
DIV. OF THE STATE ARCHITECT
OFFICE OF REGULATION SERVICES
APPL # 01-
FILE NO. 7-C1
AC ___ KS ___ SS ___
DATE ___

DIVISION OF THE STATE ARCHITECT
1515 CLAY STREET
OAKLAND, CA94612
ph:(510) 622-3101

agency

C-4008 APPLIED ARTS & ADMIN RENOVATION

2600 MISSION BELL DRIVE, SAN PABLO, CA 94806

CONTRA COSTA COMMUNITY COLLEGE DISTRICT
500 COURT STREET MARTINEZ, CA 94553

owner

tBP project number: 20865.00
file name:
drawn by: checked by:
date: July 06, 2018

rev:	date:	description:
	4/30/2019	RECORD SET

THIS DRAWING AND THE DESIGNS, DEPICTIONS, IDEAS AND OTHER INFORMATION CONTAINED HEREIN CONSTITUTE UNPUBLISHED WORK OF tBP/ARCHITECTURE AND SHALL REMAIN PROPERTY OF tBP/ARCHITECTURE IN PERPETUITY. NO PART THEREOF SHALL BE REPRODUCED, DISCLOSED, DISTRIBUTED, SOLD, PUBLISHED OR OTHERWISE USED IN ANY WAY WITHOUT THE ADVANCED EXPRESS WRITTEN CONSENT OF tBP/ARCHITECTURE.

drawing title: ROUGH-IN SCHEDULE

drawing no.: T0.03

drawing of

Record Dwgs

TELECOMMUNICATIONS CABLING SCHEDULE

SYMBOL	ATTRIBUTE	DESCRIPTION	PORT NUMBER - CABLE ASSIGNMENTS REFER TO "CABLE SERVICE TYPES" FOR DEFINITIONS #1	#2	#3	#4	#5	#6	COMMENTS	OUTLET AT USER SPACE	COMMENTS	CONNECTING MEDIA (PATCH CORD, CROSSCONNECT WIRE) REQUIREMENTS – WORKSTATION #1	#2	#3	#4	#5	#6	COMMENTS	TELECOMMUNICATIONS ROOM #1	#2	#3	#4	#5	#6	COMMENTS
	1	WALL OUTLET - 1-PORT	V	B	B	B			6	FLUSH FACEPLATE, 4-PORT		CPC1						4	CPC2						4
	2	WALL OUTLET - 2-PORT	V	D	B	B			6	FLUSH FACEPLATE, 4-PORT		CPC1	CPC1					4	CPC2	CPC2					4 △1
	2E	WALL OUTLET - 2-PORT (EMERGENCY SPEAKERS)	D	D	B	B			2, 6, 8	FLUSH FACEPLATE, 4-PORT		CPC1	CPC1					4	CPC2	CPC2					4
	2S	WALL OUTLET - 2-PORT (STUDENT)	D1	D1	B	B			6	FLUSH FACEPLATE, 4-PORT		CPC1	CPC1					4	CPC2	CPC2					4
	3	WALL OUTLET - 3-PORT	V	D	D	B			6	FLUSH FACEPLATE, 4-PORT		CPC1	CPC1	CPC1				4	CPC2	CPC2	CPC2				4 △1
	4S	WALL OUTLET - 4-PORT (STUDENT)	D1	D1	D1	D1			6	FLUSH FACEPLATE, 4-PORT		CPC1	CPC1	CPC1	CPC1			4	CPC2	CPC2	CPC2	CPC2			4
	BMS	WALL OUTLET - SPECIALTY SYSTEMS	D	D					2	FLUSH FACEPLATE, 2-PORT		CPC1	CPC1					4	CPC2	CPC2					4
	F1	FURNITURE OUTLET - 1-PORT	D1	△1					2, 3	FLUSH FACEPLATE, 1-PORT		CPC1						4	CPC2						4
	SEC	WALL OUTLET - SECURITY PANEL	D	D					2	SURFACE MOUNT BOX		CPC2	CPC2					4	CPC2	CPC2					4
	W	WALL PHONE	V						6	FLUSH WALL PHONE FACEPLATE		CPC1						4	CPC2						4
	INT	MULTISERVICE POKE-THRU - TELECOM, AV, POWER	D	D	D	D			1	FLUSH FACEPLATE, 4-PORT		CPC1	CPC1	CPC1	CPC1			4	CPC2	CPC2	CPC2	CPC2			4 △1
	4S	MULTISERVICE FLOOR BOX - TELECOM, POWER	D1	D1	D1	D1			1	FLUSH FACEPLATE, 4-PORT		CPC1	CPC1	CPC1	CPC1			4	CPC2	CPC2	CPC2	CPC2			4
	2	CEILING OUTLET - PROJECTOR	D	D						FLUSH FACEPLATE, 2-PORT		CPC1	CPC1					4	CPC2						4
	WAP	WIRELESS ACCESS POINT	D	D					5	SURFACE MOUNT BOX, 2-PORT		CPC1	CPC1					4	CPC2						4
	A, B	SECURITY IP CAMERA	D						7	SURFACE MOUNT BOX, 1-PORT		CPC1						4	CPC2						4

CABLE SERVICE TYPES AND TERMINATIONS △1

DESCRIPTOR	CABLE TYPE	CONDUCTORS	NEC	TERMINATION TYPE AT EQUIPMENT ROOM	TERMINATION TYPE AT USER SPACE	JACK COLOR
"V"	UTP CAT6A	4 TWISTED PAIRS (23 AWG)	CMP	HORIZONTAL VOICE FIELD - ONTO RACK MOUNTED MODULAR PATCH PANELS	8-PIN MODULAR CONNECTOR	GREEN
"D"	UTP CAT6A	4 TWISTED PAIRS (23 AWG)	CMP	HORIZONTAL DATA FIELD - ONTO RACK MOUNTED MODULAR PATCH PANELS	8-PIN MODULAR CONNECTOR	BLUE
"D1"	UTP CAT6A	4 TWISTED PAIRS (23 AWG)	CMP	HORIZONTAL DATA FIELD - ONTO RACK MOUNTED MODULAR PATCH PANELS	8-PIN MODULAR CONNECTOR	YELLOW
"B"	NONE	NONE		BLANK INSERT IN UNUSED PORT	BLANK INSERT IN UNUSED PORT	

CONNECTING MEDIA TYPES △1

DESCRIPTOR	DESCRIPTION	DATA (COLOR)	VOICE (COLOR)	WAP (COLOR)	LENGTH (FT)
CPC1	COPPER/UTP PATCH CORD, CATEGORY 6A, 8-PIN MODULAR TO 8-PIN MODULAR	BLUE	WHITE/YELLOW	GREEN	10
CPC2	COPPER/UTP PATCH CORD, CATEGORY 6A, 8-PIN MODULAR TO 8-PIN MODULAR	BLUE	WHITE/YELLOW	GREEN	7
XCP1	COPPER/UTP CROSS CONNECT WIRE, 1-PAIR	N/A	BLU-WHI/WHI-BLU	N/A	N/A
CC1					

NUMBERED COMMENTS:

1. OUTLET SHARED WITH ELECTRICAL. REFER TO ELECTRICAL FOR OUTLET TYPE AND INSTALLATION REQUIREMENTS.
2. COORDINATE THE INSTALLATION WITH SPECIALTY EQUIPMENT CONTRACTOR (I.E., FIRE ALARM, ELEVATOR, SECURITY), INCLUDING OUTLET TYPE, LOCATION, AND INSTALLATION HEIGHT, AND CONNECTION TO EQUIPMENTS CONTROL PANEL.
3. PROVIDE FLEXIBLE SHEATHING (SUCH AS SPLIT ELECTRICAL, NONMETALLIC TUBING/ENT OR SPIRAL WRAP) AROUND CABLE FOR PROTECTION BETWEEN CABLE FEED POINT AND PARTITION FURNITURE RACEWAY.
4. FURNISH PATCH CORDS TO THE OWNER PER THEIR SCHEDULE.
5. INSTALL OUTLET BOX ON TO WIRE-MOUNTED BRACKET WITHIN CEILING.
6. TERMINATE THE CABLE VIA 8-POSITION MODULAR PLUG. LEAVE APPROXIMATELY 4 TO 6 INCHES CABLE SLACK WITHIN THE BOX.
7. PRIOR TO ROUGH-IN, VERIFY WITH THE SYSTEM VENDOR DEVICE BOX AND COVER/RING TYPE AND SIZE REQUIREMENTS. THE BOX AND COVER/RING TYPE AND SIZE LISTED IN THIS SCHEDULE ARE DEFAULT.
8. PROVIDE CAT6A PATCH CORD BETWEEN THE BACKBOXES INDICAED IN THE ROUGH-IN SCHEDULE △1

GENERAL COMMENTS:

A. REFER TO FLOOR PLANS, REFLECTED CEILING PLANS AND ROOM PLANS FOR DIAGRAMMATIC LAYOUT OF TELECOMMUNICATIONS OUTLETS. ALSO REFER TO ARCHITECTURAL PLANS AND ELEVATIONS FOR DIMENSIONED OUTLET PLACEMENT AND CONFIGURATION REQUIREMENTS.

B. REFER TO DIAGRAMS ON SHEET T0.14 FOR HORIZONTAL CABLING ROUTING REQUIREMENTS.

C. PROVIDE BLANK INSERTS INTO UNUSED FACEPLATE PORTS

tBP
architecture
planning
interiors

tBP/Architecture
1777 Oakland Boulevard, Suite 320
Walnut Creek, CA 94596
ph: 925.246.6419

architect

TEECOM
1333 Broadway, Suite 601
Oakland, CA 94612
510-337-2800
510-337-2804 fax
www.teecom.com

consultant

IDENTIFICATION STAMP
DIV. OF THE STATE ARCHITECT
OFFICE OF REGULATION SERVICES
APPL #:01-
FILE NO. 7-C1
AC. FLS SS
DATE

DIVISION OF THE STATE ARCHITECT
1515 CLAY STREET
OAKLAND, CA94612
ph:(510) 622-3101

agency

C-4008 APPLIED ARTS
& ADMIN RENOVATION
2600 MISSION BELL DRIVE, SAN PABLO, CA 94806

CONTRA COSTA COMMUNITY
COLLEGE DISTRICT
500 COURT STREET MARTINEZ, CA 94553

owner

tBP project number: 20865.00
file name:
drawn by: checked by:
date: July 06, 2018

rev:	date:	description:
	4/30/2019	RECORD SET

THIS DRAWING AND THE DESIGNS, DEPICTIONS, IDEAS AND OTHER INFORMATION CONTAINED HEREIN CONSTITUTE UNPUBLISHED WORK OF tBP/ARCHITECTURE AND SHALL REMAIN PROPERTY OF tBP/ARCHITECTURE IN PERPETUITY. NO PART THEREOF SHALL BE REPRODUCED, DISCLOSED, DISTRIBUTED, SOLD, PUBLISHED OR OTHERWISE USED IN ANY WAY WITHOUT THE ADVANCED EXPRESS WRITTEN CONSENT OF tBP/ARCHITECTURE.

drawing title: CABLING SCHEDULE

drawing no.: T0.04

drawing of

Record Dwgs

SHEET NOTES

1. THIS DRAWING REPRESENTS A DIAGRAMMATIC OVERVIEW OF THE TECHNOLOGY BACKBONE PATHWAYS INFRASTRUCTURE.
2. REFER TO SITE PLANS, FLOOR PLANS, REFLECTED CEILING PLANS AND TELECOM ROOM PLANS FOR MORE INFORMATION ABOUT PATHWAYS LOCATIONS, ROUTING, TYPES AND QUANTITIES.
3. PATHWAYS SHOWN DEDICATED FOR TECHNOLOGY CABLING ONLY, UON.

SYMBOL LEGEND

- CABLE TRAY - REFER TO CEILING PLANS FOR HORIZONTAL CABLE TRAY ROUTING
- CONDUIT - QUANTITY AND SIZE AS NOTED
- CONDUIT SLEEVE (CONDUIT OF LENGTH LESS THAN 3 FEET) - QUANTITY AND SIZE AS NOTED
- CONDUIT AND/OR SLEEVE(S) WITH WEATHERHEAD - QUANTITY AND SIZE AS NOTED
- FIRESTOP DEVICE(S) - QUANTITY AS NOTED
- J — CABLE HANGER RUN

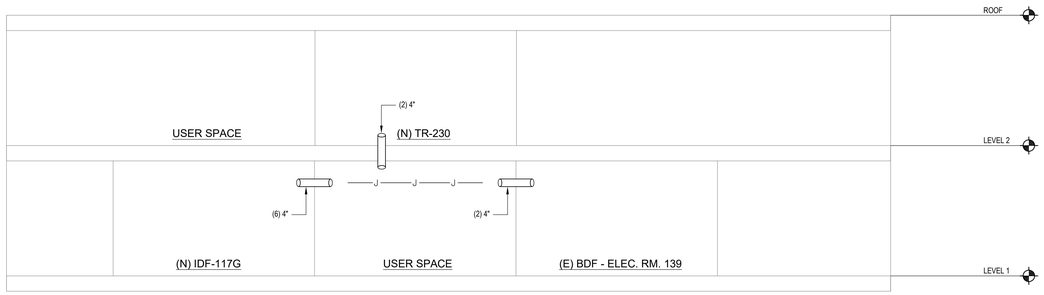

tBP
architecture
planning
interiors

tBP/Architecture
1777 Oakland Boulevard, Suite 320
Walnut Creek, CA 94596
ph: 925.246.6419

architect

TEECOM
1333 Broadway, Suite 601
Oakland, CA 94612
510-337-2800
510-337-2804 fax
www.teecom.com

consultant

IDENTIFICATION STAMP
DIV. OF THE STATE ARCHITECT
OFFICE OF REGULATION SERVICES
APPL #01-
FILE NO. 7-C1
AC FLS SS
DATE

DIVISION OF THE STATE ARCHITECT
1515 CLAY STREET
OAKLAND, CA94612
ph:(510) 622-3101

agency

C-4008 APPLIED ARTS & ADMIN RENOVATION

2600 MISSION BELL DRIVE, SAN PABLO, CA 94806

CONTRA COSTA COMMUNITY COLLEGE DISTRICT
500 COURT STREET MARTINEZ, CA 94553

owner

tBP project number: 20865.00
file name:
drawn by: checked by:
date: July 06, 2018

rev:	date:	description:
	4/30/2019	RECORD SET

THIS DRAWING AND THE DESIGNS, DEPICTIONS, IDEAS AND OTHER INFORMATION CONTAINED HEREIN CONSTITUTE UNPUBLISHED WORK OF tBP/ARCHITECTURE AND SHALL REMAIN PROPERTY OF tBP/ARCHITECTURE IN PERPETUITY. NO PART THEREOF SHALL BE REPRODUCED, DISCLOSED, DISTRIBUTED, SOLD, PUBLISHED OR OTHERWISE USED IN ANY WAY WITHOUT THE ADVANCED EXPRESS WRITTEN CONSENT OF tBP/ARCHITECTURE.

drawing title: DIAGRAM - BACKBONE PATHWAYS

drawing no.: T0.11

drawing of

Record Dwgs

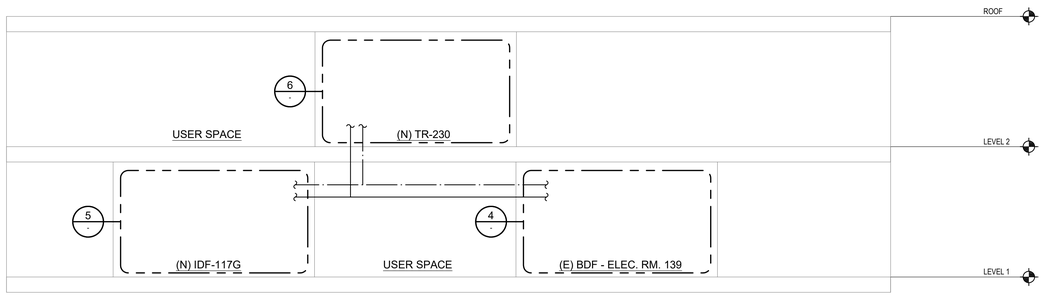

2 TELECOM BACKBONE CABLING DIAGRAM

SCALE: NONE

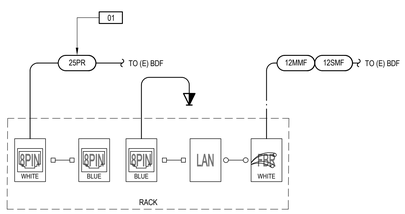

6 (N) TR-230 - CABLING

SCALE: NONE

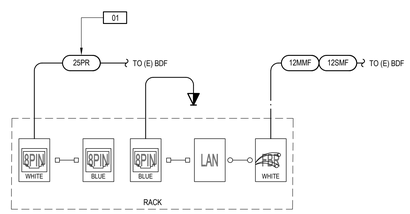

5 (N) IDF-117G - CABLING

SCALE: NONE

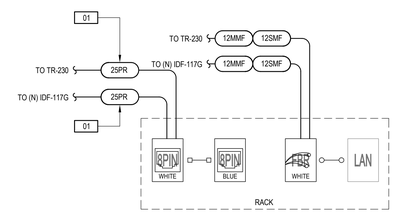

4 (E) BDF - ELEC. RM. 139 - CABLING

SCALE: NONE

SHEET NOTES

1. THIS DRAWING REPRESENTS A DIAGRAMMATIC OVERVIEW OF THE TECHNOLOGY CABLING INFRASTRUCTURE. REFER TO SITE PLANS, FLOOR PLANS, REFLECTED CEILING PLANS, AND TELECOM ROOMS PLANS FOR MORE INFORMATION AND FOR ESTIMATING CABLE LENGTHS. REFER TO TELECOM ROOM PLANS FOR TERMINATION INFORMATION AND EQUIPMENT PLACEMENT.
2. REFER TO TELECOMMUNICATIONS OUTLETS SCHEDULE FOR OUTLET CONFIGURATION REQUIREMENTS. REFER TO FLOOR PLANS FOR OUTLET APPROXIMATE PLACEMENTS. REFER TO ARCHITECTURAL DRAWINGS FOR EXACT PLACEMENT, VERTICALLY AND HORIZONTALLY.
3. NOT ALL ROUTING CONFIGURATIONS FOR HORIZONTAL CABLING ARE SHOWN ON THIS DIAGRAM. REFER TO SHEET(S) T0.14 FOR HORIZONTAL ROUTING DIAGRAMS.

SYMBOL LIST

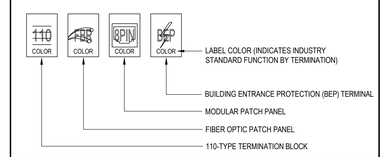

LABEL COLOR LEGEND (PER TIA-606)

ORANGE	DEMARCATION POINT	WHITE	1ST LEVEL BACKBONE
GREEN	NETWORK CONNECTION	GREY	2ND LEVEL BACKBONE
PURPLE	EQUIPMENT (PBX, LAN)	BLUE	HORIZONTAL (STATION)
BROWN	INTERBUILDING BACKBONE		

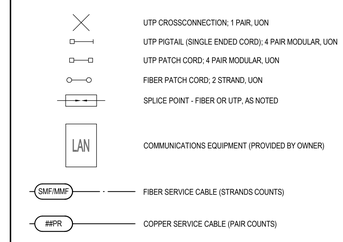

NUMBERED NOTES

01 TERMINATE 1 PAIR PER PORT.

tBP
architecture
planning
interiors

tBP/Architecture
1777 Oakland Boulevard, Suite 320
Walnut Creek, CA 94596
ph: 925.246.6419

architect

TEECOM
1333 Broadway, Suite 601
Oakland, CA 94612
510-337-2804
510-337-2804 fax
www.teecom.com

consultant

IDENTIFICATION STAMP
DIV. OF THE STATE ARCHITECT
OFFICE OF REGULATION SERVICES
APPL #01-
FILE NO. 7-C1
AC FLS SS
DATE

DIVISION OF THE STATE ARCHITECT
1515 CLAY STREET
OAKLAND, CA94612
ph:(510) 622-3101

agency

C-4008 APPLIED ARTS & ADMIN RENOVATION

2600 MISSION BELL DRIVE, SAN PABLO, CA 94806

CONTRA COSTA COMMUNITY COLLEGE DISTRICT
500 COURT STREET MARTINEZ, CA 94553

owner

tBP project number: 20865.00
file name:
drawn by: checked by:
date: July 06, 2018

rev:	date:	description:
	4/30/2019	RECORD SET

THIS DRAWING AND THE DESIGNS, DEPICTIONS, IDEAS AND OTHER INFORMATION CONTAINED HEREIN CONSTITUTE UNPUBLISHED WORK OF tBP/ARCHITECTURE AND SHALL REMAIN PROPERTY OF tBP/ARCHITECTURE IN PERPETUITY. NO PART THEREOF SHALL BE REPRODUCED, DISCLOSED, DISTRIBUTED, SOLD, PUBLISHED OR OTHERWISE USED IN ANY WAY WITHOUT THE ADVANCED EXPRESS WRITTEN CONSENT OF tBP/ARCHITECTURE.

drawing title: DIAGRAM - BACKBONE CABLING

drawing no.: T0.12

drawing of

Record Dwgs

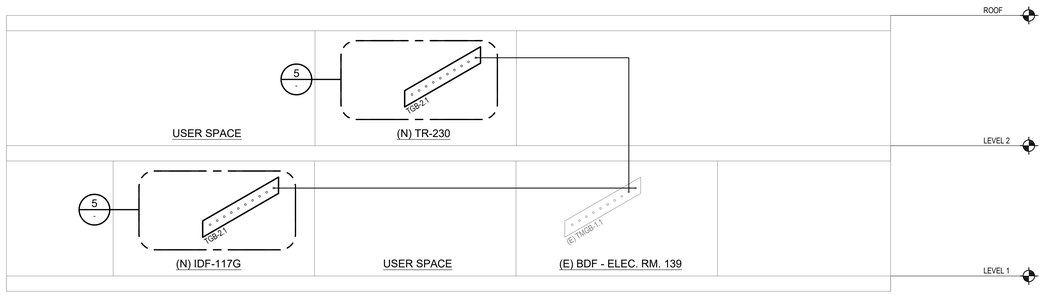

2 TELECOMMUNICATIONS BONDING BACKBONE DIAGRAM

SCALE: NONE

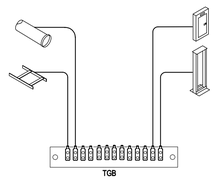

5 TR BONDING REQUIREMENTS

SCALE: NONE

SHEET NOTES

1. THIS DRAWING REPRESENTS A DIAGRAMMATIC OVERVIEW OF THE TELECOMMUNICATIONS BONDING BACKBONE AND INFRASTRUCTURE. REFER TO SITE PLANS, FLOOR PLANS, REFLECTED CEILING PLANS AND ROOM PLANS FOR ESTIMATING BACKBONE CONDUCTOR LENGTHS AND ROOM PLANS FOR COMPONENT PLACEMENT. REFER TO T0.13 FOR ADDITIONAL REQUIREMENTS (APPROVED CONNECTIONS, CONFIGURATIONS, ETC.)
2. LABEL BUSBARS AND CONDUCTORS. REFER TO SPECIFICATIONS FOR LABELING REQUIREMENTS.
3. REFER TO PATHWAYS RISER DIAGRAM TO DETERMINE ROUTE FOR TBB.
4. SIZE BONDING CONDUCTORS (BCT, TBB, GE AND TBC) PER ANSI/TIA-607-B – SEE CHART BELOW.

SYMBOL LEGEND

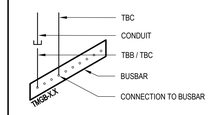

FOR APPROVED CONDUCTOR CONNECTION TYPES, REFER TO T0.13.

SYMBOL	BONDING REQUIREMENTS
BUILDING STEEL	PROVIDE TBC FROM TMGB/TGB TO NEAREST BUILDING STEEL. FOLLOW STRUCTURAL REQUIREMENTS IF FIREPROOFING MUST BE REMOVED.
ELECTRICAL PANEL	PROVIDE TBC FROM TMGB/TGB TO ELECTRICAL PANEL'S ACEG. COORDINATE TERMINATION WITHIN ELECTRICAL PANEL WITH ELECTRICAL CONTRACTOR.
EQUIPMENT RACK	PROVIDE TBC FROM TMGB/TGB TO EQUIPMENT RACK BAYS. REFER TO BONDING DETAILS FOR CONNECTION AND CONFIGURATION REQUIREMENTS AND LIMITATIONS.
CABLE TRAY (LADDER)	PROVIDE TBC FROM TMGB/TGB TO CABLE TRAY.
CABLE TRAY (WIRE MESH)	PROVIDE TBC FROM TMGB/TGB TO CABLE TRAY.
CABLE RUNWAY	PROVIDE TBC FROM TMGB/TGB TO CABLE RUNWAY.
CONDUIT	PROVIDE TBC FROM TMGB/TGB TO CONDUITS. REFER TO BONDING DETAILS FOR CONNECTION AND CONFIGURATION REQUIREMENTS AND LIMITATIONS.

ANSI/TIA-607-B

TBB/GE/TBC LENGTH m (ft)	SIZE (AWG)
LESS THAN 4 (13)	6
4-6 (14-20)	4
6-8 (21-26)	3
8-10 (27-33)	2
10-13 (34-41)	1
13-16 (42-52)	1/0
16-20 (53-66)	2/0
20-26 (67-84)	3/0
26-32 (85-105)	4/0
32-38 (106-125)	250 KCMIL
38-46 (126-150)	300 KCMIL
46-53 (151-175)	350 KCMIL
53-76 (176-250)	500 KCMIL
76-91 (251-300)	600 KCMIL
GREATER THAN 91 (>300)	750 KCMIL

tBP
architecture
planning
interiors

tBP/Architecture
1777 Oakland Boulevard, Suite 320
Walnut Creek, CA 94596
ph: 925.246.6419

architect

TEECOM
1333 Broadway, Suite 601
Oakland, CA 94612
510-337-2800
510-452-2804 fax
www.teecom.com

consultant

IDENTIFICATION STAMP
DIV. OF THE STATE ARCHITECT
OFFICE OF REGULATION SERVICES
APPL #01-
FILE NO. 7-C1
AC SS
FLS
DATE

DIVISION OF THE STATE ARCHITECT
1515 CLAY STREET
OAKLAND, CA94612
ph:(510) 622-3101

agency

C-4008 APPLIED ARTS
& ADMIN RENOVATION

2600 MISSION BELL DRIVE, SAN PABLO, CA 94806

CONTRA COSTA COMMUNITY
COLLEGE DISTRICT
500 COURT STREET MARTINEZ, CA 94553

owner

tBP project number: 20865.00
file name:
drawn by: checked by:
date: July 06, 2018

rev:	date:	description:
	4/30/2019	RECORD SET

THIS DRAWING AND THE DESIGNS, DEPICTIONS, IDEAS AND OTHER INFORMATION CONTAINED HEREIN CONSTITUTE UNPUBLISHED WORK OF tBP/ARCHITECTURE AND SHALL REMAIN PROPERTY OF tBP/ARCHITECTURE IN PERPETUITY. NO PART THEREOF SHALL BE REPRODUCED, DISCLOSED, DISTRIBUTED, SOLD, PUBLISHED OR OTHERWISE USED IN ANY WAY WITHOUT THE ADVANCED EXPRESS WRITTEN CONSENT OF tBP/ARCHITECTURE.

drawing title: DIAGRAM - BONDING RISER

drawing no.: T0.13

drawing of

Record Dwgs

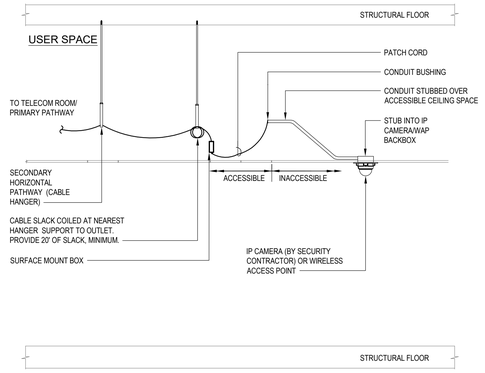

APPLICABLE TO OUTLET(S): WAP 8

3 SECURITY CAMERA, FED FROM CEILING

SCALE: NONE

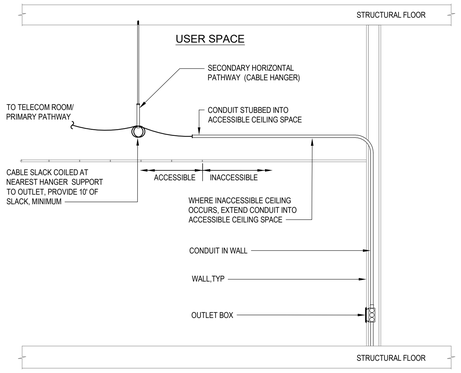

APPLICABLE TO OUTLET(S): 1 2 3 4 BMS W

2 CABLE ROUTING - WALL OUTLET, INACCESSIBLE CEILING

SCALE: NONE

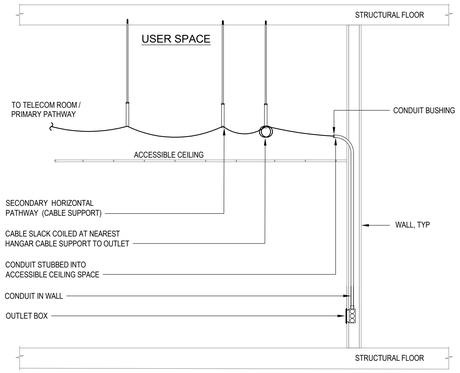

APPLICABLE TO OUTLET(S): 1 2 3 4 BMS W

1 CABLE ROUTING - WALL OUTLET, ACCESSIBLE CEILING

SCALE: NONE

tBP architecture planning interiors

tBP/Architecture
1777 Oakland Boulevard, Suite 320
Walnut Creek, CA 94596
ph: 925.246.6419

architect

TEECOM
1333 Broadway, Suite 601
Oakland, CA 94612
510-337-2804
510-452-2000 fax
www.teecom.com

consultant

IDENTIFICATION STAMP
DIV. OF THE STATE ARCHITECT
OFFICE OF REGULATION SERVICES
APPL #01-
FILE NO. 7-C1
AC. FLS SS
DATE

DIVISION OF THE STATE ARCHITECT
1515 CLAY STREET
OAKLAND, CA94612
ph:(510) 622-3101

agency

C-4008 APPLIED ARTS & ADMIN RENOVATION

2600 MISSION BELL DRIVE, SAN PABLO, CA 94806

CONTRA COSTA COMMUNITY COLLEGE DISTRICT
500 COURT STREET MARTINEZ, CA 94553

owner

tBP project number: 20865.00
file name:
drawn by: checked by:
date: July 06, 2018

rev:	date:	description:
	4/30/2019	RECORD SET

THIS DRAWING AND THE DESIGNS, DEPICTIONS, IDEAS AND OTHER INFORMATION CONTAINED HEREIN CONSTITUTE UNPUBLISHED WORK OF tBP/ARCHITECTURE AND SHALL REMAIN PROPERTY OF tBP/ARCHITECTURE IN PERPETUITY. NO PART THEREOF SHALL BE REPRODUCED, DISCLOSED, DISTRIBUTED, SOLD, PUBLISHED OR OTHERWISE USED IN ANY WAY WITHOUT THE ADVANCED EXPRESS WRITTEN CONSENT OF tBP/ARCHITECTURE.

drawing title: DIAGRAM - HORIZONTAL ROUTING

drawing no.: T0.14

drawing of

Record Dwgs

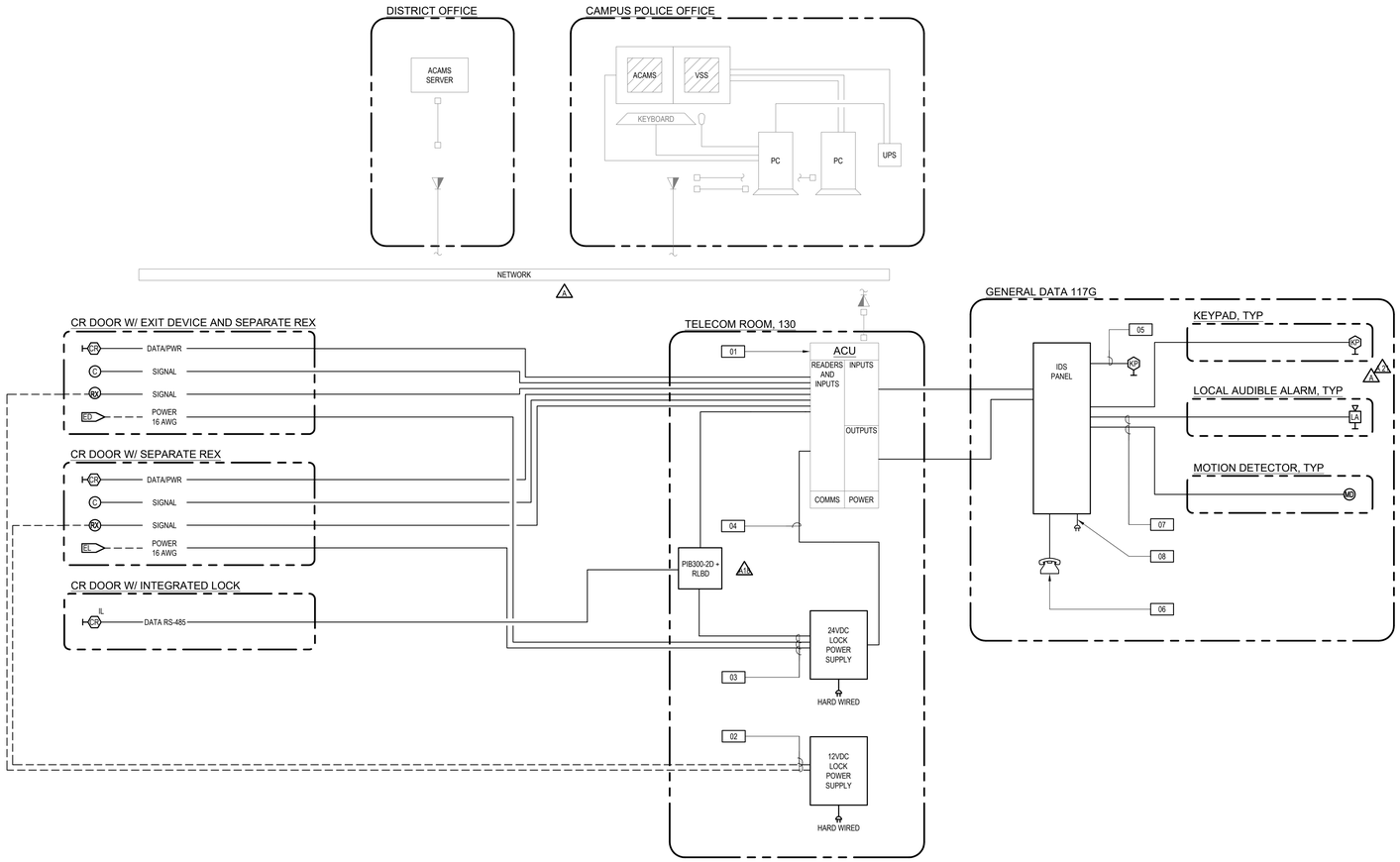

SHEET NOTES

1. THE INTRUSION DETECTION SYSTEM BLOCK DIAGRAM AND THE ACAMS BLOCK DIAGRAM ARE DIAGRAMMATIC ONLY, INTENDING TO REPRESENT INTERCONNECTION OF MAJOR COMPONENTS. PROVIDE ACU PANELS, I/O MODULES, POWER SUPPLIES, ISOLATION BOARDS/RELAYS, ETC., IN QUANTITIES REQUIRED TO SUPPORT FIELD DEVICES. REFER TO FLOOR PLANS FOR FIELD DEVICE QUANTITIES AND LOCATIONS; REFER TO ROOM PLANS FOR PANEL AND EQUIPMENT LOCATIONS, CONFIGURATIONS, ETC.; REFER TO DETAILS FOR SPECIFIC WIRING, MINOR COMPONENTS, ACCESSORIES, INSTALLATION, ETC.
2. COORDINATE TCP/IP ADDRESS FOR ACCESS CONTROL PANELS WITH CONTRA COSTA COLLEGE IT DEPARTMENT REPRESENTATIVE.
3. COORDINATE ANALOG FOR INTRUSION DETECTION SYSTEM PANEL WITH CONTRA COSTA COLLEGE IT DEPARTMENT REPRESENTATIVE.
4. IN EQUIPMENT ROOMS, CONNECT SECURITY EQUIPMENT TO EMERGENCY POWER BRANCH. COORDINATE THE SECURITY SYSTEM POWER REQUIREMENTS WITH THE ELECTRICAL INSTALLATION.

NUMBERED NOTES

01	EXISTING ACCESS CONTROL PANEL. EXPAND TO SUPPORT PROJECT READERS.
02	PROVIDE INDIVIDUAL POWER FEED TO EACH 12VDC FIELD DEVICE.
03	VIDE INDIVIDUAL 24VDC POWER FEED FOR EACH LOCK.
04	INTERCONNECT LOCK OUTPUTS FOR EACH CARD READER DOOR WITH DRY CONTACT INPUT ON LOCK POWER SUPPLY. DO NOT SWITCH LOCK COIL LOAD THROUGH ACU RELAYS.
05	MOUNT KEYPAD TO PANEL COVER FOR SERVICE AND TECHNICAL TROUBLESHOOTING.
06	PROVIDE DEDICATED ANALOG PHONE LINE FOR ALARM PANEL.
07	THESE ALARMS REPRESENT INPUTS FROM MONITORED FIELD DEVICES AND SHOULD BE SUPERVISED.
08	LOCATE STEP-DOWN TRANSFORMER INSIDE SECURITY JUNCTION BOX.

SYMBOLS LEGEND

FOR FIELD DEVICE SYMBOLS, REFER TO SHEET T0.01.

ADDITION SYMBOLS USED ON THIS SHEET ARE DEFINED AS FOLLOWS:

- PC — EXISTING SECURITY WORKSTATION (COMPUTER / PC, KEYBOARD, MOUSE, UPS, ETC. - REFER TO 20181300 FOR SPECIFICATIONS)
- VSS — EXISTING MONITOR + MOUNTING APPARATUS
- PATCH CORDS (FOR NETWORK CONNECTION) - COORDINATE NETWORK CONNECTION WITH TELECOM CABLING INSTALLATION.
- TELECOM CABLING - REFER TO TELECOM PLANS FOR NETWORK CABLING.
- CONNECTION TO 120VAC CIRCUIT, UON - COORDINATE POWER CONNECTION WITH ELECTRICAL INSTALLATION.
- PROVIDE DEDICATED ANALOG PHONE LINE - COORDINATE WITH OWNER.

architecture planning interiors

tBP/Architecture
1777 Oakland Boulevard, Suite 320
Walnut Creek, CA 94596
ph: 925.246.6419

architect

TEECOM
1333 Broadway, Suite 601
Oakland, CA 94612
510-337-2804
510-452-2000 fax
www.teecom.com

consultant

IDENTIFICATION STAMP
DIV. OF THE STATE ARCHITECT
OFFICE OF REGULATION SERVICES
APPL #01-
FILE NO. 7-C1
AC SS
FLS
DATE

DIVISION OF THE STATE ARCHITECT
1515 CLAY STREET
OAKLAND, CA94612
ph:(510) 622-3101

agency

C-4008 APPLIED ARTS & ADMIN RENOVATION

2600 MISSION BELL DRIVE, SAN PABLO, CA 94806

CONTRA COSTA COMMUNITY COLLEGE DISTRICT
500 COURT STREET MARTINEZ, CA 94553

owner

tBP project number: 20865.00
file name:
drawn by: checked by:
date: July 06, 2018

rev:	date:	description:
	4/30/2019	RECORD SET

THIS DRAWING AND THE DESIGNS, DEPICTIONS, IDEAS AND OTHER INFORMATION CONTAINED HEREIN CONSTITUTE UNPUBLISHED WORK OF tBP/ARCHITECTURE AND SHALL REMAIN PROPERTY OF tBP/ARCHITECTURE IN PERPETUITY. NO PART THEREOF SHALL BE REPRODUCED, DISCLOSED, DISTRIBUTED, SOLD, PUBLISHED OR OTHERWISE USED IN ANY WAY WITHOUT THE ADVANCED EXPRESS WRITTEN CONSENT OF tBP/ARCHITECTURE.

drawing title: DIAGRAM - SECURITY ACAMS

drawing no.: T0.21

drawing of

Record Dwgs

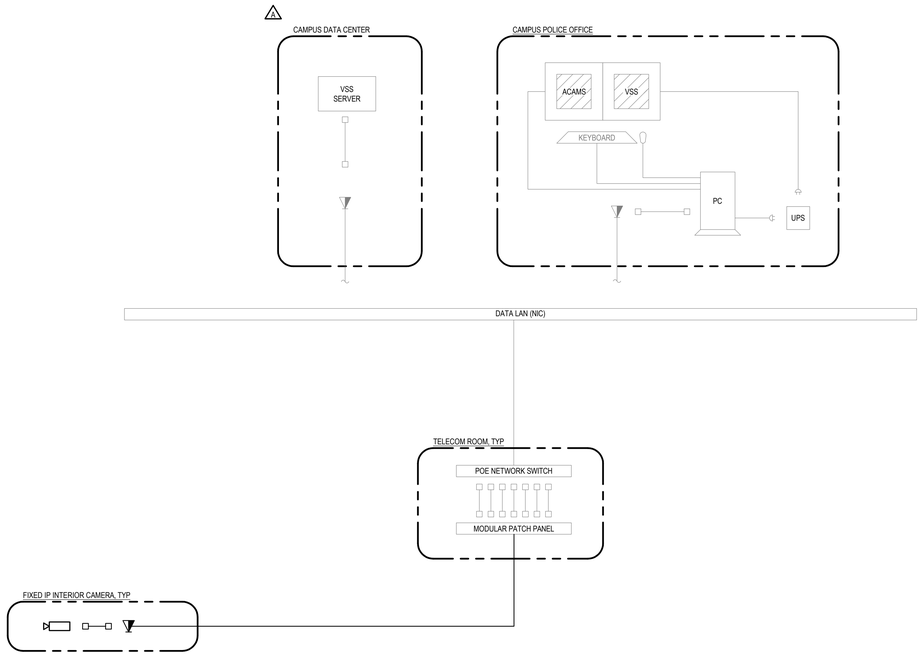

SHEET NOTES

1. VSS BLOCK DIAGRAM DIAGRAMMATIC ONLY. PROVIDE CAMERAS, NETWORK VIDEO RECORDERS, AND POWER SUPPLIES TO SUPPORT FIELD DEVICES SHOWN ON FLOOR PLANS.
2. COORDINATE TCP/IP ADDRESS FOR CAMERAS, NETWORK VIDEO RECORDERS, AND CLIENT WORKSTATIONS WITH OWNER REPRESENTATIVE.

SYMBOLS LEGEND

FOR FIELD DEVICE SYMBOLS, REFER TO SHEET T0.01.

ADDITION SYMBOLS USED ON THIS SHEET ARE DEFINED AS FOLLOWS:

- PC — SECURITY WORKSTATION (COMPUTER / PC, KEYBOARD, MOUSE, UPS, ETC. - REFER TO 20/81300 FOR SPECIFICATIONS)
- VSS — MONITOR + MOUNTING APPARATUS
- PATCH CORDS (FOR NETWORK CONNECTION) - COORDINATE NETWORK CONNECTION WITH TELECOM CABLING INSTALLATION.
- TELECOM CABLING - REFER TO TELECOM PLANS FOR NETWORK CABLING.
- PROVIDE 120V AC 20 AMP CIRCUIT CONNECTED TO EMERGENCY POWER, UON - COORDINATE POWER CONNECTION WITH ELECTRICAL INSTALLATION.
- BOND METALLIC COMPONENT TO APPROVED GROUND

tBP
architecture
planning
interiors

tBP/Architecture
1777 Oakland Boulevard, Suite 320
Walnut Creek, CA 94596
ph: 925.246.6419

architect

TEECOM
1333 Broadway, Suite 601
Oakland, CA 94612
510-337-2800
510-337-2804 fax
www.teecom.com

consultant

IDENTIFICATION STAMP
DIV. OF THE STATE ARCHITECT
OFFICE OF REGULATION SERVICES
APPL #01-
FILE NO. 7-C1
AC FLS SS
DATE

DIVISION OF THE STATE ARCHITECT
1515 CLAY STREET
OAKLAND, CA94612
ph:(510) 622-3101

agency

C-4008 APPLIED ARTS & ADMIN RENOVATION

2600 MISSION BELL DRIVE, SAN PABLO, CA 94806

CONTRA COSTA COMMUNITY COLLEGE DISTRICT
500 COURT STREET MARTINEZ, CA 94553

owner

tBP project number: 20865.00
file name:
drawn by: checked by:
date: July 06, 2018

rev:	date:	description:
	4/30/2019	RECORD SET

THIS DRAWING AND THE DESIGNS, DEPICTIONS, IDEAS AND OTHER INFORMATION CONTAINED HEREIN CONSTITUTE UNPUBLISHED WORK OF tBP/ARCHITECTURE AND SHALL REMAIN PROPERTY OF tBP/ARCHITECTURE IN PERPETUITY. NO PART THEREOF SHALL BE REPRODUCED, DISCLOSED, DISTRIBUTED, SOLD, PUBLISHED OR OTHERWISE USED IN ANY WAY WITHOUT THE ADVANCED EXPRESS WRITTEN CONSENT OF tBP/ARCHITECTURE.

drawing title: DIAGRAM - SECURITY VSS

drawing no.: T0.22

drawing of

Record Dwgs

SHEET NOTES

1. THIS DRAWING REPRESENTS A DIAGRAMMATIC OVERVIEW OF THE SECURITY RISER INFRASTRUCTURE.
2. REFER TO SITE PLANS, FLOOR PLANS, REFLECTED CEILING PLANS AND TELECOM ROOM PLANS FOR MORE INFORMATION ABOUT PATHWAYS LOCATIONS, ROUTING, TYPES AND QUANTITIES.

SYMBOL LEGEND

- CABLE TRAY - REFER TO CEILING PLANS FOR HORIZONTAL CABLE TRAY ROUTING
- CONDUIT - QUANTITY AND SIZE AS NOTED
- CONDUIT SLEEVE (CONDUIT OF LENGTH LESS THAN 3 FEET) - QUANTITY AND SIZE AS NOTED
- CONDUIT AND/OR SLEEVE(S) WITH WEATHERHEAD - QUANTITY AND SIZE AS NOTED
- FIRESTOP DEVICE(S) - QUANTITY AS NOTED
- J — CABLE HANGER RUN

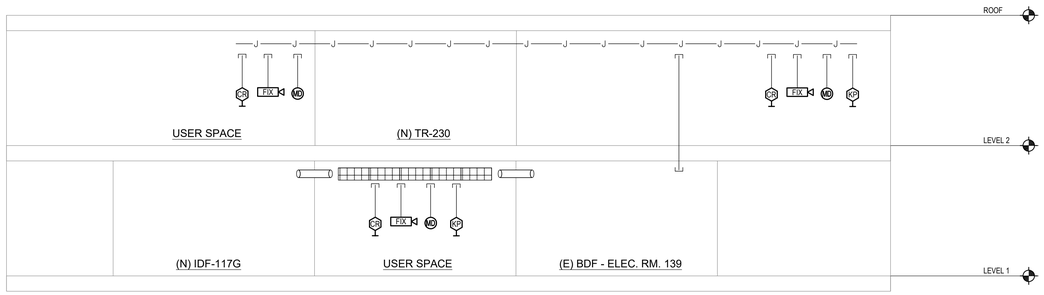

tBP
architecture
planning
interiors

tBP/Architecture
1777 Oakland Boulevard, Suite 320
Walnut Creek, CA 94596
ph: 925.246.6419

architect

TEECOM
1333 Broadway, Suite 601
Oakland, CA 94612
510-337-2804
510-337-2806 fax
www.teecom.com

consultant

IDENTIFICATION STAMP
DIV. OF THE STATE ARCHITECT
OFFICE OF REGULATION SERVICES
APPL #01-
FILE NO. 7-C1
AC. FLS SS
DATE

DIVISION OF THE STATE ARCHITECT
1515 CLAY STREET
OAKLAND, CA94612
ph:(510) 622-3101

agency

C-4008 APPLIED ARTS & ADMIN RENOVATION

2600 MISSION BELL DRIVE, SAN PABLO, CA 94806

CONTRA COSTA COMMUNITY COLLEGE DISTRICT
500 COURT STREET MARTINEZ, CA 94553

owner

tBP project number: 20865.00
file name:
drawn by: checked by:
date: July 06, 2018

rev:	date:	description:
	4/30/2019	RECORD SET

THIS DRAWING AND THE DESIGNS, DEPICTIONS, IDEAS AND OTHER INFORMATION CONTAINED HEREIN CONSTITUTE UNPUBLISHED WORK OF tBP/ARCHITECTURE AND SHALL REMAIN PROPERTY OF tBP/ARCHITECTURE IN PERPETUITY. NO PART THEREOF SHALL BE REPRODUCED, DISCLOSED, DISTRIBUTED, SOLD, PUBLISHED OR OTHERWISE USED IN ANY WAY WITHOUT THE ADVANCED EXPRESS WRITTEN CONSENT OF tBP/ARCHITECTURE.

drawing title: DIAGRAM - SECURITY RISER

drawing no.: T0.23

drawing of

Record Dwgs

FUNCTIONAL LEGEND

ANALOG VIDEO

AUDIO

DIGITAL VIDEO

DATA

CONTROL

CABLE CONTINUATION — TO EQUIPMENT — FROM EQUIPMENT

EQUIPMENT GROUPING BORDER — LOCATION

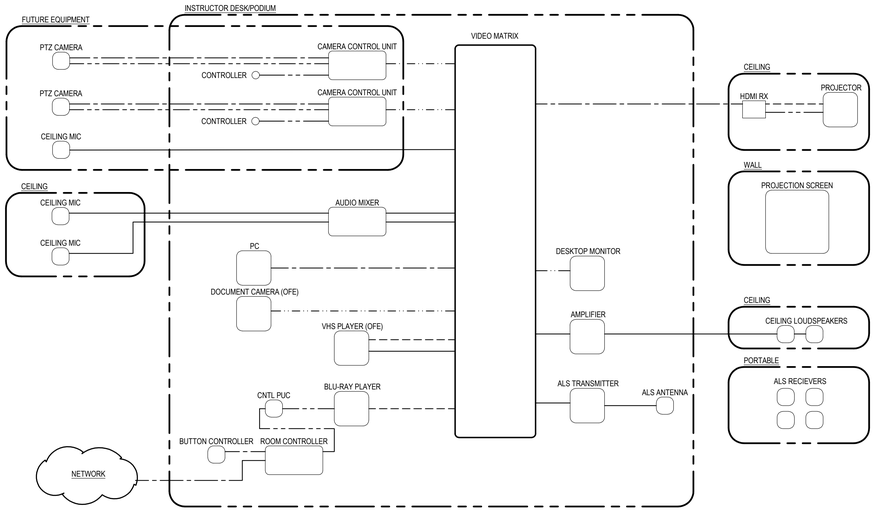

tBP

architecture
planning
interiors

tBP/Architecture
1777 Oakland Boulevard, Suite 320
Walnut Creek, CA 94596
ph: 925.246.6419

architect

TEECOM
1333 Broadway, Suite 601
Oakland, CA 94612
510-337-2800
510-337-2804 fax
www.teecom.com

consultant

IDENTIFICATION STAMP
DIV. OF THE STATE ARCHITECT
OFFICE OF REGULATION SERVICES
APPL # 01-
FILE NO. 7-C1
AC ___ KS ___ SS ___
DATE ___

DIVISION OF THE STATE ARCHITECT
1515 CLAY STREET
OAKLAND, CA94612
ph:(510) 622-3101

agency

C-4008 APPLIED ARTS & ADMIN RENOVATION

2600 MISSION BELL DRIVE, SAN PABLO, CA 94806

CONTRA COSTA COMMUNITY COLLEGE DISTRICT

500 COURT STREET MARTINEZ, CA 94553

owner

tBP project number: 20865.00

file name:

drawn by: checked by:

date: July 06, 2018

rev:	date:	description:
	4/30/2019	RECORD SET

THIS DRAWING AND THE DESIGNS, DEPICTIONS, IDEAS AND OTHER INFORMATION CONTAINED HEREIN CONSTITUTE UNPUBLISHED WORK OF tBP/ARCHITECTURE AND SHALL REMAIN PROPERTY OF tBP/ARCHITECTURE IN PERPETUITY. NO PART THEREOF SHALL BE REPRODUCED, DISCLOSED, DISTRIBUTED, SOLD, PUBLISHED OR OTHERWISE USED IN ANY WAY WITHOUT THE ADVANCED EXPRESS WRITTEN CONSENT OF tBP/ARCHITECTURE.

drawing title: DIAGRAM - AV FUNCTIONAL CLASSROOM TYPE A

drawing no.: T0.31

drawing of

Record Dwgs

FUNCTIONAL LEGEND

ANALOG VIDEO

AUDIO

DIGITAL VIDEO

DATA

CONTROL

CABLE CONTINUATION — TO EQUIPMENT — FROM EQUIPMENT

EQUIPMENT GROUPING BORDER — LOCATION

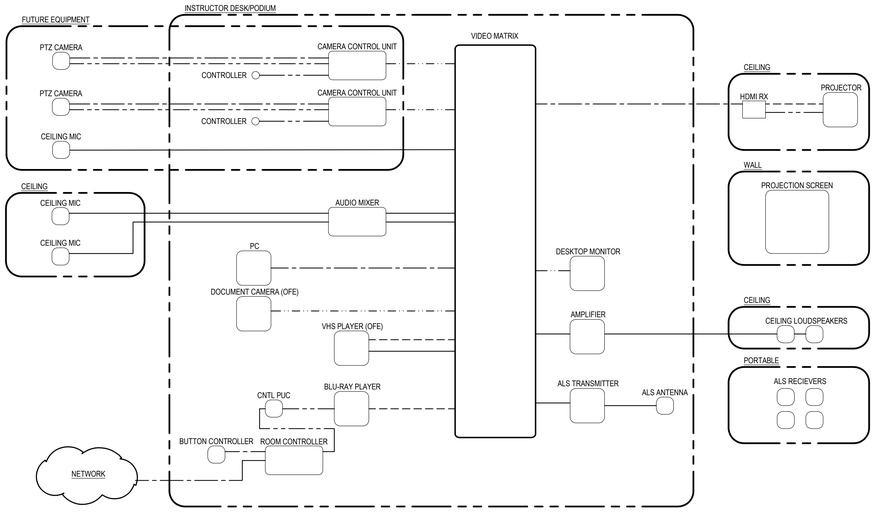

tBP

architecture
planning
interiors

tBP/Architecture
1777 Oakland Boulevard, Suite 320
Walnut Creek, CA 94596
ph: 925.246.6419

architect

TEECOM
1333 Broadway, Suite 601
Oakland, CA 94612
510-337-2800
510-337-2804 fax
www.teecom.com

consultant

IDENTIFICATION STAMP
DIV. OF THE STATE ARCHITECT
OFFICE OF REGULATION SERVICES
APPL # 01-
FILE NO. 7-C1
AC ___ KS ___ SS ___
DATE ___

DIVISION OF THE STATE ARCHITECT
1515 CLAY STREET
OAKLAND, CA94612
ph:(510) 622-3101

agency

C-4008 APPLIED ARTS & ADMIN RENOVATION

2600 MISSION BELL DRIVE, SAN PABLO, CA 94806

CONTRA COSTA COMMUNITY COLLEGE DISTRICT

500 COURT STREET MARTINEZ, CA 94553

owner

tBP project number: 20865.00

file name:

drawn by: checked by:

date: July 06, 2018

rev:	date:	description:
	4/30/2019	RECORD SET

THIS DRAWING AND THE DESIGNS, DEPICTIONS, IDEAS AND OTHER INFORMATION CONTAINED HEREIN CONSTITUTE UNPUBLISHED WORK OF tBP/ARCHITECTURE AND SHALL REMAIN PROPERTY OF tBP/ARCHITECTURE IN PERPETUITY. NO PART THEREOF SHALL BE REPRODUCED, DISCLOSED, DISTRIBUTED, SOLD, PUBLISHED OR OTHERWISE USED IN ANY WAY WITHOUT THE ADVANCED EXPRESS WRITTEN CONSENT OF tBP/ARCHITECTURE.

drawing title: DIAGRAM - AV FUNCTIONAL NURSING CLASSROOM

drawing no.: T0.32

drawing of

Record Dwgs

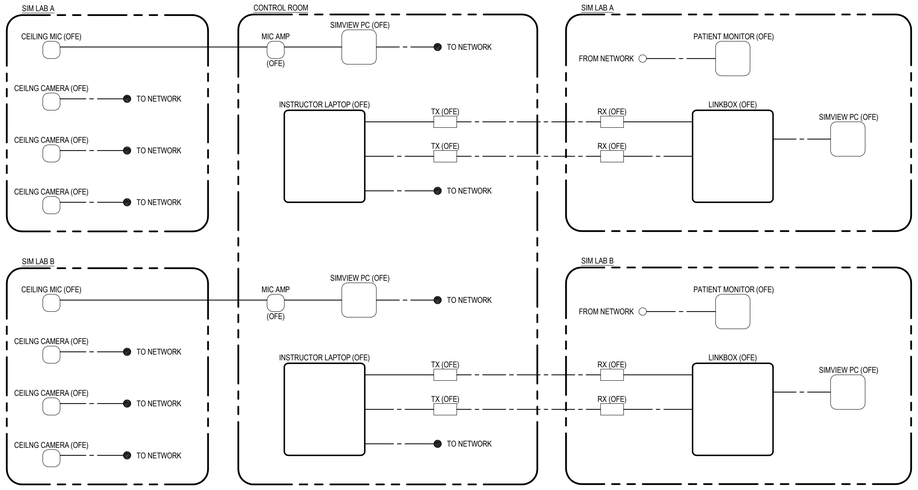

FUNCTIONAL LEGEND

ANALOG VIDEO

AUDIO

DIGITAL VIDEO

DATA

CONTROL

CABLE CONTINUATION — TO EQUIPMENT — FROM EQUIPMENT

EQUIPMENT GROUPING BORDER — LOCATION

tBP
architecture
planning
interiors

tBP/Architecture
1777 Oakland Boulevard, Suite 320
Walnut Creek, CA 94596
ph: 925.246.6419

architect

TEECOM
1333 Broadway, Suite 601
Oakland, CA 94612
510-337-2800
510-337-2804 fax
www.teecom.com

consultant

IDENTIFICATION STAMP
DIV. OF THE STATE ARCHITECT
OFFICE OF REGULATION SERVICES
APPL # 01-
FILE NO. 7-C1
AC ___ KS ___ SS ___
DATE ___

DIVISION OF THE STATE ARCHITECT
1515 CLAY STREET
OAKLAND, CA94612
ph:(510) 622-3101

agency

C-4008 APPLIED ARTS & ADMIN RENOVATION

2600 MISSION BELL DRIVE, SAN PABLO, CA 94806

CONTRA COSTA COMMUNITY COLLEGE DISTRICT
500 COURT STREET MARTINEZ, CA 94553

owner

tBP project number: 20865.00
file name:
drawn by: checked by:
date: July 06, 2018

rev:	date:	description:
	4/30/2019	RECORD SET

DIAGRAM - AV FUNCTIONAL
SIM LAB / CONTROL

THIS DRAWING AND THE DESIGNS, DEPICTIONS, IDEAS AND OTHER INFORMATION CONTAINED HEREIN CONSTITUTE UNPUBLISHED WORK OF tBP/ARCHITECTURE AND SHALL REMAIN PROPERTY OF tBP/ARCHITECTURE IN PERPETUITY. NO PART THEREOF SHALL BE REPRODUCED, DISCLOSED, DISTRIBUTED, SOLD, PUBLISHED OR OTHERWISE USED IN ANY WAY WITHOUT THE ADVANCED EXPRESS WRITTEN CONSENT OF tBP/ARCHITECTURE.

drawing title:

drawing no.:

T0.33

drawing of

Record Dwgs

SHEET NOTES

1. REFER TO ELECTRICAL PLANS TO COORDINATE FINAL LOCATIONS OF OUTLETS, DEVICES, AND EQUIPMENT.
2. SERVE LOW VOLTAGE DEVICES/OUTLETS ON THIS SHEET FROM IDF-117G.
3. REFER TO SHEET T0.02 FOR PATHWAYS REQUIREMENTS.
4. PATHWAYS SHOWN ARE DEDICATED FOR TELECOMMUNICATIONS CABLING ONLY.
5. PROVIDE APPROVED FIRESTOP SYSTEMS AT PENETRATIONS THROUGH FIRE BARRIERS, SMOKE BARRIERS, AND SMOKE PARTITIONS TO MAINTAIN RATING. REFER TO SHEET T0.02 FOR APPROVED FIRESTOP SYSTEMS.

NUMBERED NOTES

01 EXISTING SECURITY EQUIPMENT

02 REFER TO DOOR DETAIL ON SHEET T5.22

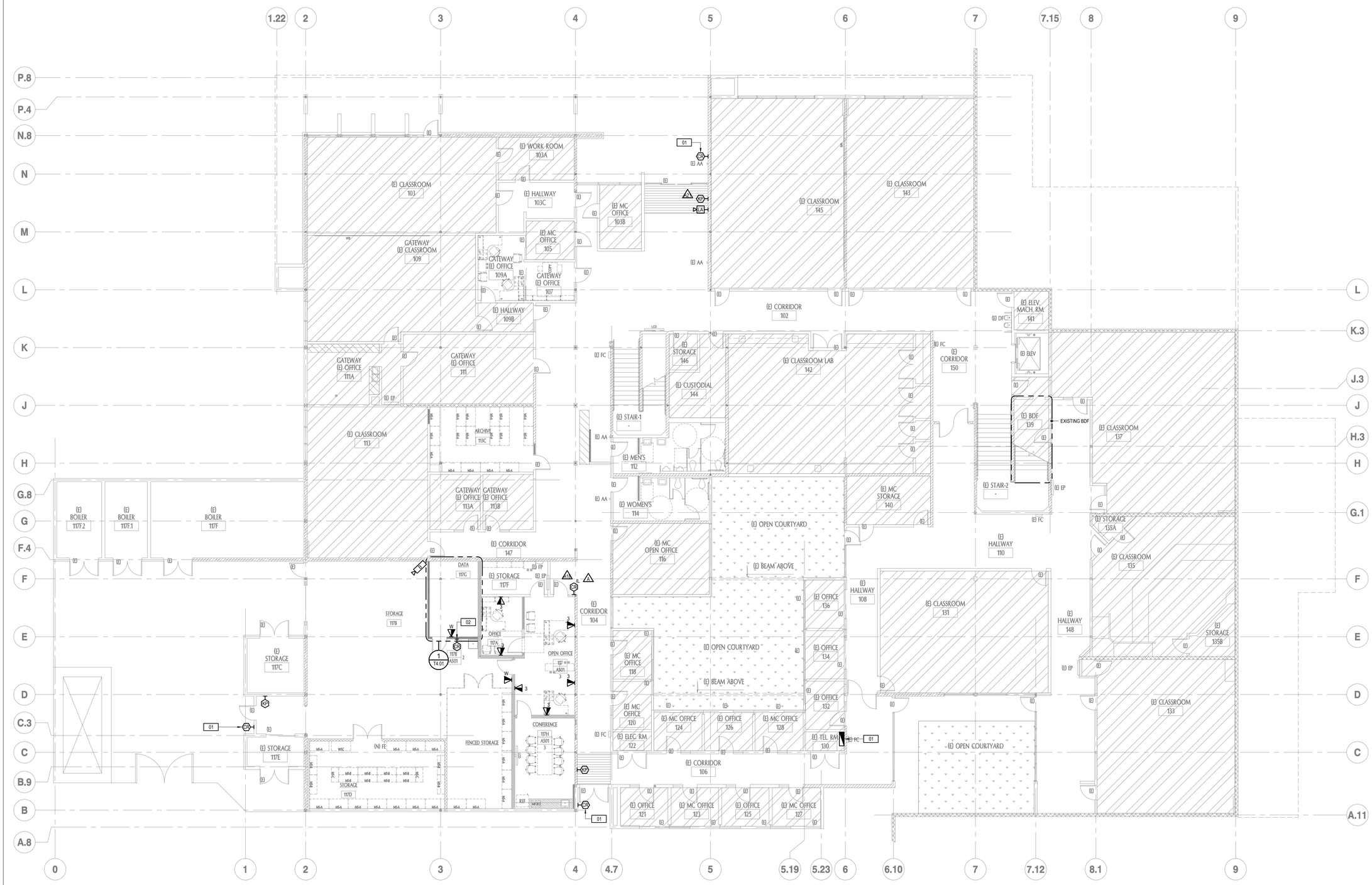

tBP/Architecture
1777 Oakland Boulevard, Suite 320
Walnut Creek, CA 94596
ph: 925.246.6419

architect

TEECOM
1333 Broadway, Suite 601
Oakland, CA 94612
510-337-2800
510-337-2804 fax
www.teecom.com

consultant

IDENTIFICATION STAMP
DIV. OF THE STATE ARCHITECT
OFFICE OF REGULATION SERVICES
APPL # 01-
FILE NO. 7-C1
AC ___ KS ___ SS ___
DATE ___

DIVISION OF THE STATE ARCHITECT
1515 CLAY STREET
OAKLAND, CA94612
ph:(510) 622-3101

agency

C-4008 APPLIED ARTS & ADMIN RENOVATION

2600 MISSION BELL DRIVE, SAN PABLO, CA 94806

CONTRA COSTA COMMUNITY COLLEGE DISTRICT
500 COURT STREET MARTINEZ, CA 94553

owner

tBP project number:	20865.00
file name:	
drawn by:	checked by:
date:	July 06, 2018

rev:	date:	description:
	4/30/2019	RECORD SET

THIS DRAWING AND THE DESIGNS, DEPICTIONS, IDEAS AND OTHER INFORMATION CONTAINED HEREIN CONSTITUTE UNPUBLISHED WORK OF tBP/ARCHITECTURE AND SHALL REMAIN PROPERTY OF tBP/ARCHITECTURE IN PERPETUITY. NO PART THEREOF SHALL BE REPRODUCED, DISCLOSED, DISTRIBUTED, SOLD, PUBLISHED OR OTHERWISE USED IN ANY WAY WITHOUT THE ADVANCED EXPRESS WRITTEN CONSENT OF tBP/ARCHITECTURE.

drawing title: FLOOR PLAN - FIRST FLOOR

drawing no.: T2.01

drawing of

Record Dwgs

SHEET NOTES

1. REFER TO ELECTRICAL PLANS TO COORDINATE FINAL LOCATIONS OF OUTLETS, DEVICES, AND EQUIPMENT.
2. SERVE LOW VOLTAGE DEVICES/OUTLETS ON THIS SHEET AS NOTED.
3. REFER TO SHEET T0.02 FOR PATHWAYS REQUIREMENTS.
4. PATHWAYS SHOWN ARE DEDICATED FOR TELECOMMUNICATIONS CABLING ONLY.
5. PROVIDE APPROVED FIRESTOP SYSTEMS AT PENETRATIONS THROUGH FIRE BARRIERS, SMOKE BARRIERS, AND SMOKE PARTITIONS TO MAINTAIN RATING. REFER TO SHEET T0.02 FOR APPROVED FIRESTOP SYSTEMS.

NUMBERED NOTES

01 EXISTING SECURITY EQUIPMENT

02 ROUTE CABLING IN THIS AREA TO TELEPHONE ROOM 230.

03 ROUTE CABLING IN THIS AREA TO TELEPHONE ROOM 230.

04 REFER TO DOOR DETAIL ON SHEET T5.22

05 INSTALL OUTLET AT SAME HEIGHT AS DISPLAY BACKBOX.

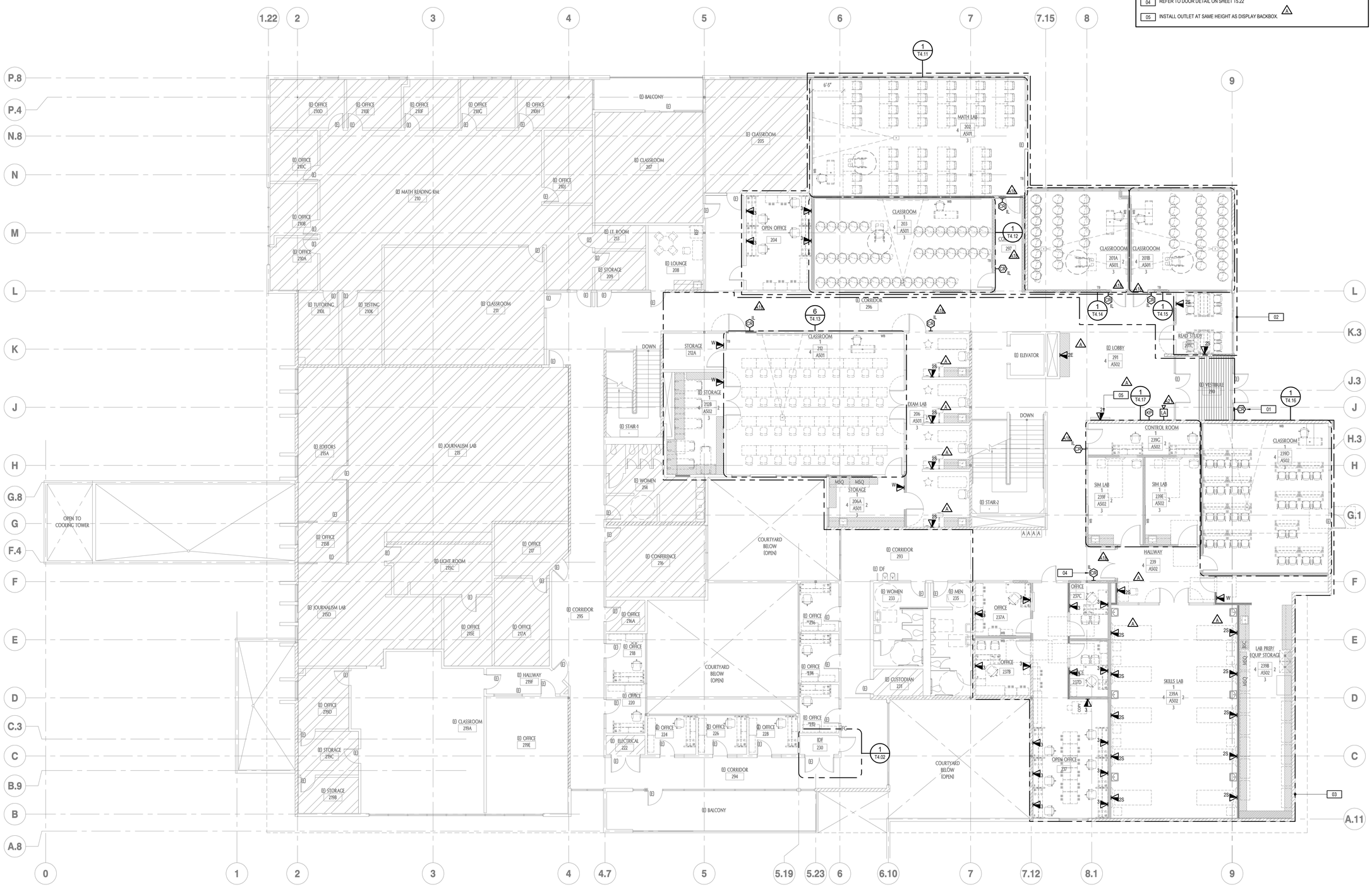

tBP/Architecture
1777 Oakland Boulevard, Suite 320
Walnut Creek, CA 94596
ph: 925.246.6419

architect

TEECOM
1333 Broadway, Suite 601
Oakland, CA 94612
510-337-2800
510-337-2804 fax
www.teecom.com

consultant

DENTIFICATION STAMP
DIV. OF THE STATE ARCHITECT
OFFICE OF REGULATION SERVICES
APPL # 01-
FILE NO. 7-C1
AC ___ KS ___ SS ___
DATE

DIVISION OF THE STATE ARCHITECT
1515 CLAY STREET
OAKLAND, CA94612
ph:(510) 622-3101

agency

C-4008 APPLIED ARTS & ADMIN RENOVATION

2600 MISSION BELL DRIVE, SAN PABLO, CA 94806

CONTRA COSTA COMMUNITY COLLEGE DISTRICT
500 COURT STREET MARTINEZ, CA 94553

owner

tBP project number:	20865.00
file name:	
drawn by:	checked by:
date:	July 06, 2018

rev:	date:	description:
	4/30/2019	RECORD SET

THIS DRAWING AND THE DESIGNS, DEPICTIONS, IDEAS AND OTHER INFORMATION CONTAINED HEREIN CONSTITUTE UNPUBLISHED WORK OF tBP/ARCHITECTURE AND SHALL REMAIN PROPERTY OF tBP/ARCHITECTURE IN PERPETUITY. NO PART THEREOF SHALL BE REPRODUCED, DISCLOSED, DISTRIBUTED, SOLD, PUBLISHED OR OTHERWISE USED IN ANY WAY WITHOUT THE ADVANCED EXPRESS WRITTEN CONSENT OF tBP/ARCHITECTURE.

drawing title: FLOOR PLAN - SECOND FLOOR

drawing no.: T2.02

drawing of

Record Dwgs

SHEET NOTES

1. REFER TO ELECTRICAL PLANS TO COORDINATE FINAL LOCATIONS OF OUTLETS, DEVICES, AND EQUIPMENT.
2. SERVE LOW VOLTAGE DEVICES/OUTLETS ON THIS SHEET FROM IDF-117G.
3. REFER TO SHEET T0.02 FOR PATHWAYS REQUIREMENTS.
4. PATHWAYS SHOWN ARE DEDICATED FOR TELECOMMUNICATIONS CABLING ONLY.
5. PROVIDE APPROVED FIRESTOP SYSTEMS AT PENETRATIONS THROUGH FIRE BARRIERS, SMOKE BARRIERS, AND SMOKE PARTITIONS TO MAINTAIN RATING. REFER TO SHEET T0.02 FOR APPROVED FIRESTOP SYSTEMS.

NUMBERED NOTES

01 WAP SHOWN FOR BUDGETARY PURPOSES ONLY, ACTUAL LOCATIONS TO BE DETERMINED BY DISTRICT IT, TYPICAL.

02 CONTRACTOR TO SURVEY EXISTING CONDITIONS AND FIELD DETERMINE EXACT ROUTE PRIOR TO INSTALLATION. DEVIATION FROM ROUTE SHOWN TO BE APPROVED BY ENGINEER PRIOR TO INSTALLATION.

03 PROVIDE CABLE TRAY OF INDICATED SIZE OR CABLE TRAY OF EQUIVALENT OR LARGER CROSS SECTIONAL AREA TO BEST ACCOMMODATE EXISTING CONDITIONS.

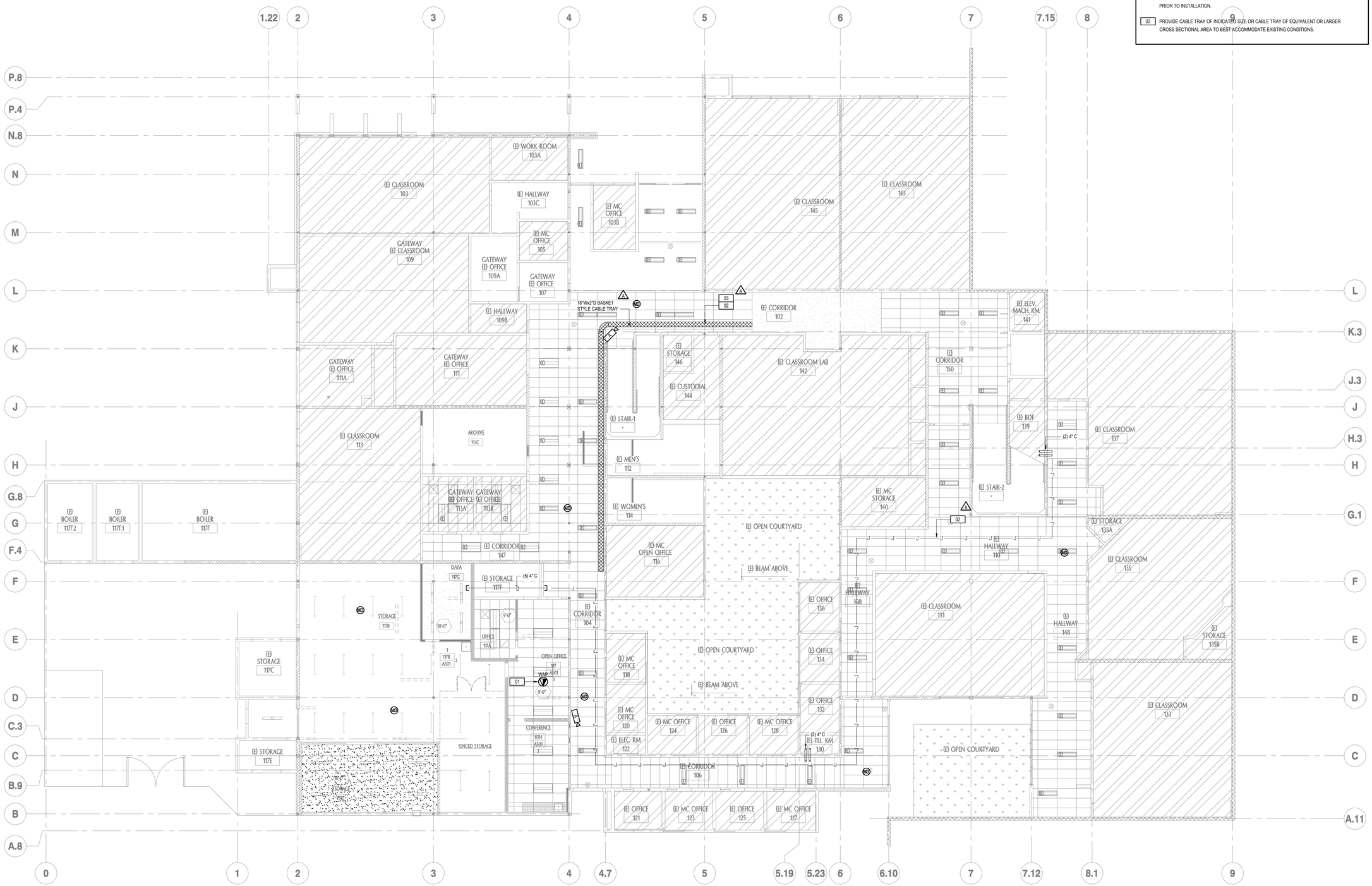

tBP architecture planning interiors

tBP/Architecture
1777 Oakland Boulevard, Suite 320
Walnut Creek, CA 94596
ph: 925.246.6419

architect

TEECOM
1333 Broadway, Suite 601
Oakland, CA 94612
510-337-2800
510-337-2804 fax
www.teecom.com

consultant

DENTIFICATION STAMP
DIV. OF THE STATE ARCHITECT
OFFICE OF REGULATION SERVICES
APPL # 01-
FILE NO. 7-C1
AC ___ KS ___ SS ___
DATE ___

DIVISION OF THE STATE ARCHITECT
1515 CLAY STREET
OAKLAND, CA94612
ph:(510) 622-3101

agency

C-4008 APPLIED ARTS & ADMIN RENOVATION

2600 MISSION BELL DRIVE, SAN PABLO, CA 94806

CONTRA COSTA COMMUNITY COLLEGE DISTRICT
500 COURT STREET MARTINEZ, CA 94553

owner

tBP project number:	20865.00
file name:	
drawn by:	checked by:
date:	July 06, 2018

rev:	date:	description:
	4/30/2019	RECORD SET

THIS DRAWING AND THE DESIGNS, DEPICTIONS, IDEAS AND OTHER INFORMATION CONTAINED HEREIN CONSTITUTE UNPUBLISHED WORK OF tBP/ARCHITECTURE AND SHALL REMAIN PROPERTY OF tBP/ARCHITECTURE IN PERPETUITY. NO PART THEREOF SHALL BE REPRODUCED, DISCLOSED, DISTRIBUTED, SOLD, PUBLISHED OR OTHERWISE USED IN ANY WAY WITHOUT THE ADVANCED EXPRESS WRITTEN CONSENT OF tBP/ARCHITECTURE.

drawing title: REFLECTED CEILING PLAN - FIRST FLOOR

drawing no.: T3.01

drawing of

Record Dwgs

SHEET NOTES

1. REFER TO ARCHITECTURAL PLANS FOR EXACT LOCATION OF OUTLETS, DEVICES, AND EQUIPMENT. ALSO REFER TO ELECTRICAL PLANS TO COORDINATE FINAL LOCATIONS OF OUTLETS, DEVICES, AND EQUIPMENT. 1
2. SERVE LOW VOLTAGE DEVICES/OUTLETS ON THIS SHEET AS NOTED ON SHEET T2.02.
3. REFER TO SHEET T0.02 FOR PATHWAYS REQUIREMENTS.
4. PATHWAYS SHOWN ARE DEDICATED FOR TELECOMMUNICATIONS CABLING ONLY.
5. PROVIDE APPROVED FIRESTOP SYSTEMS AT PENETRATIONS THROUGH FIRE BARRIERS, SMOKE BARRIERS, AND SMOKE PARTITIONS TO MAINTAIN RATING. REFER TO SHEET T0.02 FOR APPROVED FIRESTOP SYSTEMS.

NUMBERED NOTES

01 WAP SHOWN FOR BUDGETARY PURPOSES ONLY, ACTUAL LOCATIONS TO BE DETERMINED BY DISTRICT IT, TYPICAL. 1

02 CONTRACTOR TO SURVEY EXISTING CONDITIONS AND FIELD DETERMINE EXACT ROUTE PRIOR TO INSTALLATION. DEVIATION FROM ROUTE SHOWN TO BE APPROVED BY ENGINEER PRIOR TO INSTALLATION.

03 PROVIDE CABLE TRAY OF INDICATED SIZE OR CABLE TRAY OF EQUIVALENT OR LARGER CROSS SECTIONAL AREA TO BEST ACCOMMODATE EXISTING CONDITIONS.

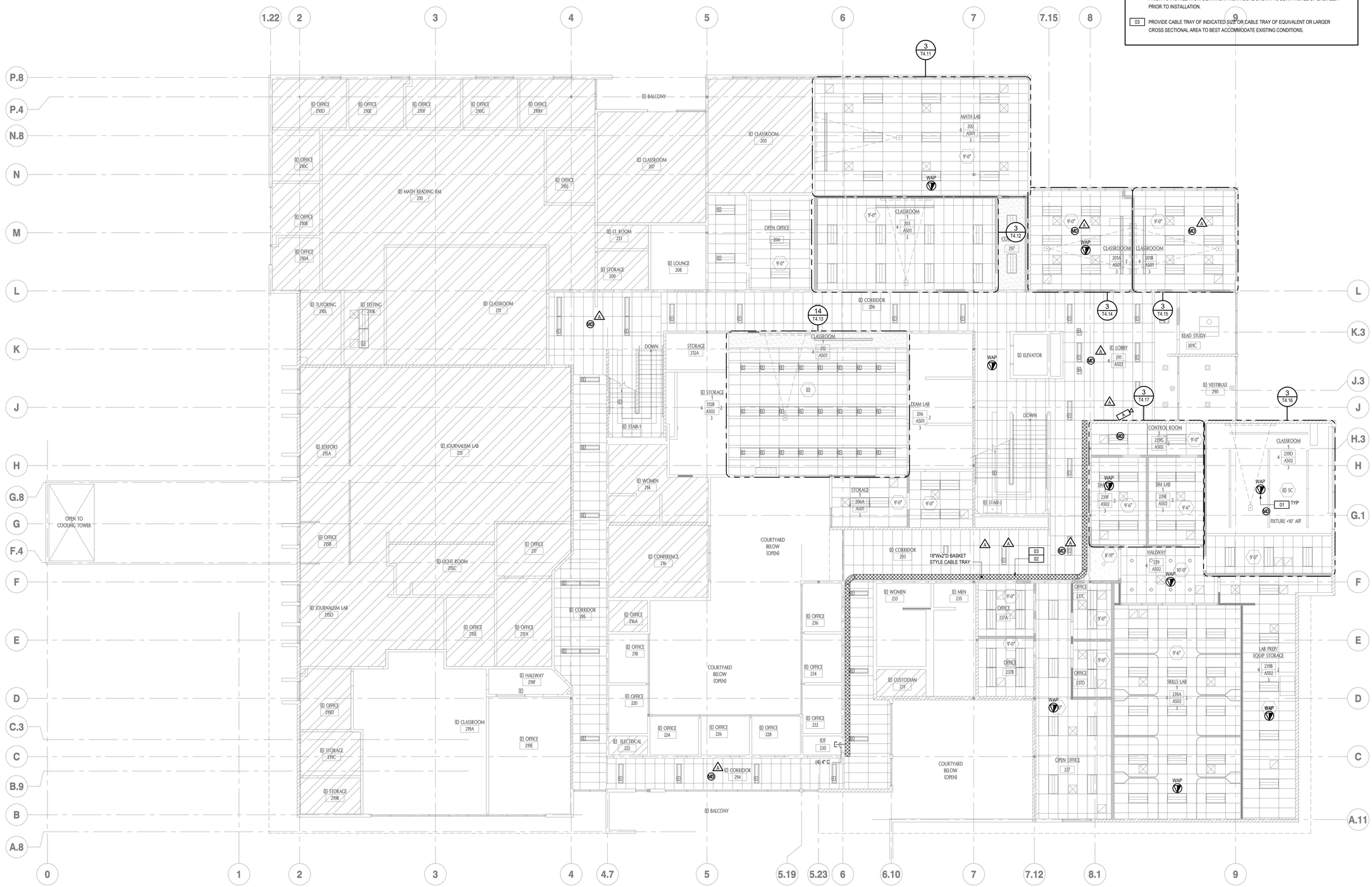

tBP
architecture
planning
interiors

tBP/Architecture
1777 Oakland Boulevard, Suite 320
Walnut Creek, CA 94596
ph: 925.246.6419

architect

TEECOM
1333 Broadway, Suite 601
Oakland, CA 94612
510-337-2800
510-337-2804 fax
www.teecom.com

consultant

IDENTIFICATION STAMP
DIV. OF THE STATE ARCHITECT
OFFICE OF REGULATION SERVICES
APPL # 01-
FILE NO. 7-C1
AC ___ KS ___ SS ___
DATE ___

DIVISION OF THE STATE ARCHITECT
1515 CLAY STREET
OAKLAND, CA94612
ph:(510) 622-3101

agency

C-4008 APPLIED ARTS & ADMIN RENOVATION

2600 MISSION BELL DRIVE, SAN PABLO, CA 94806

CONTRA COSTA COMMUNITY COLLEGE DISTRICT
500 COURT STREET MARTINEZ, CA 94553

owner

tBP project number: 20865.00
file name:
drawn by: checked by:
date: July 06, 2018

rev:	date:	description:
	4/30/2019	RECORD SET

THIS DRAWING AND THE DESIGNS, DEPICTIONS, IDEAS AND OTHER INFORMATION CONTAINED HEREIN CONSTITUTE UNPUBLISHED WORK OF tBP/ARCHITECTURE AND SHALL REMAIN PROPERTY OF tBP/ARCHITECTURE IN PERPETUITY. NO PART THEREOF SHALL BE REPRODUCED, DISCLOSED, DISTRIBUTED, SOLD, PUBLISHED OR OTHERWISE USED IN ANY WAY WITHOUT THE ADVANCED EXPRESS WRITTEN CONSENT OF tBP/ARCHITECTURE.

drawing title: REFLECTED CEILING PLAN - SECOND FLOOR

drawing no.: T3.02

drawing of

Record Dwgs

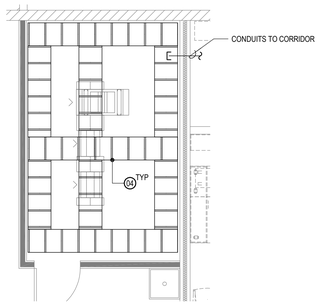

2 OVERHEAD PLAN - GENERAL DATA 117G

SCALE: 1/4" = 1'-0"

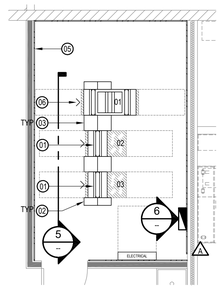

1 ROOM PLAN - GENERAL DATA 117G

SCALE: 1/4" = 1'-0"

SHEET NOTES

1. COORDINATE THE ROOM LAYOUT AMONG TRADES. DO NOT PLACE PANELS, CABINETS, PIPING, DUCTING OR EQUIPMENT WITH TELECOM ROOMS OTHER THAT SHOWN ON THESE PLANS OR DIRECTLY SUPPORT THE ROOMS' FUNCTION.
2. REFER TO ELECTRICAL DRAWINGS FOR POWER SERVICE (ELECTRICAL CIRCUITS AND RECEPTACLES) AND FOR LIGHTING REQUIREMENTS. OVERHEAD LIGHTING SHOWN ON THIS SHEET IS FOR ROOM LAYOUT/SPATIAL COORDINATION ONLY.
3. PROVIDE PLYWOOD ON WALLS AS MOUNTING BACKBOARD. PLYWOOD SHALL BE 4' X 8' X 3/4" T FIRE TREATED STAMPED WITH FIRE RATING. INSTALL PLYWOOD FROM 6'-6" TO 8'-6" AFF, UON. USING FASTENERS WITH A FLUSH HEAD WITH THE FIRE RATING STAMP FACING IN (VISIBLE FOR INSPECTION). PAINT PLYWOOD WITH WHITE PAINT TO ENHANCE ROOM LIGHTING - DURING PAINTING, MASK FIRE RATING STAMP TO MAINTAIN STAMP'S VISIBILITY.
4. PROVIDE SEISMIC BRACING FOR RACKS, CABINETS, CABLE SUPPORTS, PANELS, ETC., TO MEET APPLICABLE CODES. DO NOT ANCHOR RACKS AND CABINETS TO OVERHEAD CABLE SUPPORT. PROVIDE LABELS AT RACKS AND CABINETS.
5. PROVIDE APPROVED FIRESTOPPING SYSTEMS AT PENETRATIONS THROUGH FIRE RATED WALLS AND FLOORS TO MAINTAIN RATING. PROVIDE APPROVED LABELING FOR FIRESTOPPING SYSTEMS.
6. CABLE TRAY'S DEPTH REFERS TO LOADING DEPTH.
7. PROVIDE RADIUS DROPOUTS WHERE CABLES TRANSITION DOWNWARD FROM OVERHEAD HORIZONTAL CABLE TRAY, WHETHER EXPRESSLY SHOWN OR NOT.
8. INSTALL TERMINATION APPARATUS AND EQUIPMENT TO FRONT OF RACK BAY (FRONT TO FACE FRONT), UON.
9. NEATLY BUNDLE (DRESS CABLES LONGITUDINALLY) AND SUPPORT (USING APPROVED TIES AND AS DESCRIBED IN SPECIFICATIONS) TELECOMMUNICATIONS CABLES ONTO OVERHEAD AND VERTICAL CABLE SUPPORT. NEATLY BUNDLE AND SUPPORT TELECOMMUNICATIONS CABLES INTO THE BACK OF THE VERTICAL MANAGEMENT SECTIONS. DRESS TELECOMMUNICATIONS CABLES FROM THE VERTICAL MANAGEMENT SECTIONS TO THE TERMINATION POSITION WITHIN THE TERMINATION APPARATUS. MAXIMUM BUNDLE SIZE: 24 CABLES.
10. GROUP JACKS IN PATCH PANELS BY SERVICE TYPE. VALIDATE JACK LAYOUT WITH DISTRICT IT PRIOR TO INSTALLATION.
11. VALIDATE FINAL RACK LOCATIONS WITH DISTRICT IT PRIOR TO INSTALLATION.

SYMBOL LEGEND

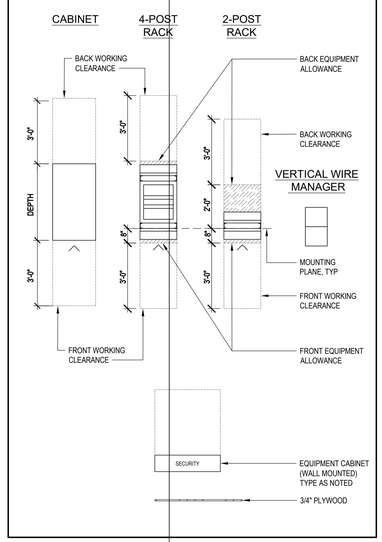

EQUIPMENT LIST

TAG	DESCRIPTION
01	EQUIPMENT RACK - 2-CHANNEL, 7'0"H x 19", BLACK
02	VERTICAL MANAGEMENT SECTION - 12"W, SINGLE SIDED
03	VERTICAL MANAGEMENT SECTION - 12"W, DOUBLE SIDED
04	OVERHEAD CABLE SUPPORT - CABLE RUNWAY, 18" W, BLACK
05	3/4" FIRE TREATED PLYWOOD BACKBOARD
06	EQUIPMENT RACK - 4-CHANNEL, 7'0"H x 19"W, BLACK
07	INTRUSION DETECTION PANEL
08	DEDICATED 120VAC/20A
09	2" CONDUIT STUBBED TO CABLE TRAY

6 SECURITY EQU
SCALE: NONE

6 SECURITY EQU
SCALE: NONE

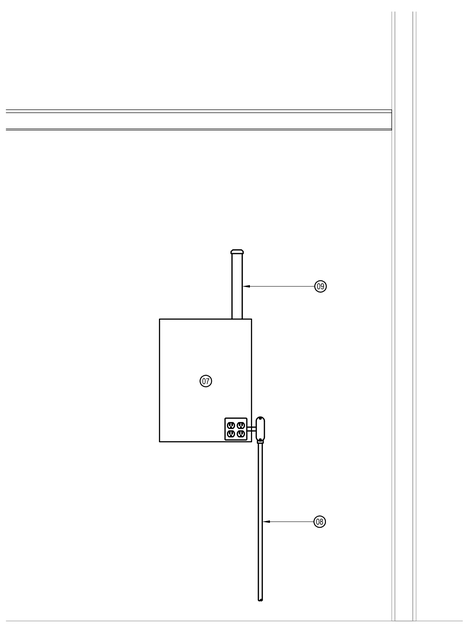

6 SECURITY EQUIPMENT ELEVATION

SCALE: NONE

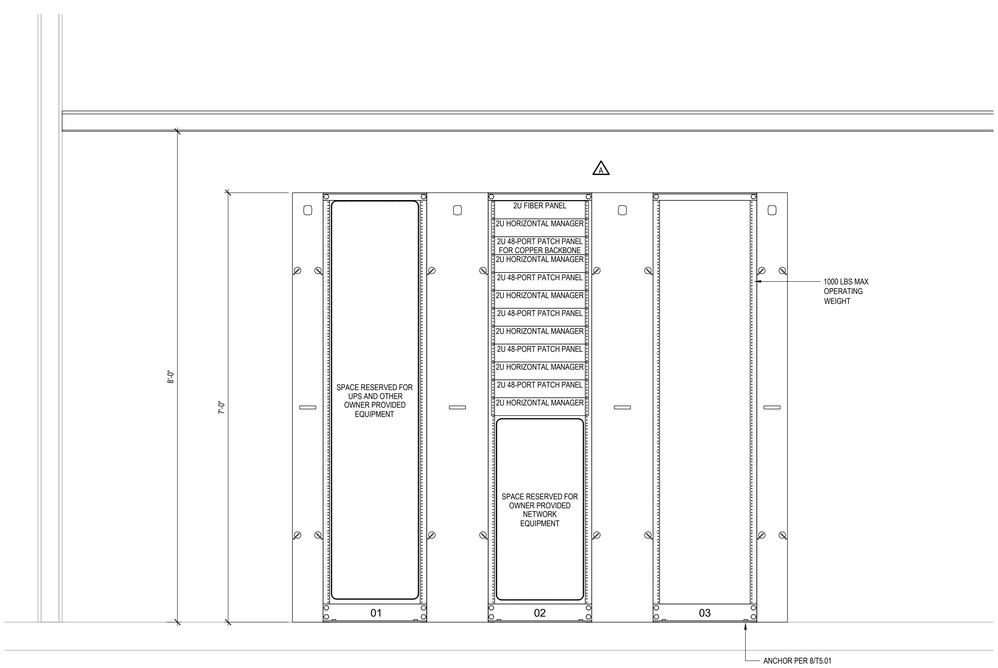

5 RACK ELEVATION

SCALE: 1" = 1'-0"

tBP
architecture
planning
interiors

tBP/Architecture
1777 Oakland Boulevard, Suite 320
Walnut Creek, CA 94596
ph: 925.246.6419

architect

TEECOM
1333 Broadway, Suite 601
Oakland, CA 94612
510-337-2800
510-337-2804 fax
www.teecom.com

consultant

IDENTIFICATION STAMP
DIV. OF THE STATE ARCHITECT
OFFICE OF REGULATION SERVICES
APPL # 01-
FILE NO. 17-C1
AC KS SS
DATE

DIVISION OF THE STATE ARCHITECT
1515 CLAY STREET
OAKLAND, CA94612
ph:(510) 622-3101

agency

C-4008 APPLIED ARTS & ADMIN RENOVATION

2600 MISSION BELL DRIVE, SAN PABLO, CA 94806

CONTRA COSTA COMMUNITY COLLEGE DISTRICT
500 COURT STREET MARTINEZ, CA 94553

owner

tBP project number: 20865.00
file name:
drawn by: checked by:
date: July 06, 2018

rev:	date:	description:
	4/30/2019	RECORD SET

THIS DRAWING AND THE DESIGNS, DEPICTIONS, IDEAS AND OTHER INFORMATION CONTAINED HEREIN CONSTITUTE UNPUBLISHED WORK OF tBP/ARCHITECTURE AND SHALL REMAIN PROPERTY OF tBP/ARCHITECTURE IN PERPETUITY. NO PART THEREOF SHALL BE REPRODUCED, DISCLOSED, DISTRIBUTED, SOLD, PUBLISHED OR OTHERWISE USED IN ANY WAY WITHOUT THE ADVANCED EXPRESS WRITTEN CONSENT OF tBP/ARCHITECTURE.

drawing title: ROOM PLAN - GENERAL DATA 117G

drawing no.: T4.01

drawing of

Record Dwgs

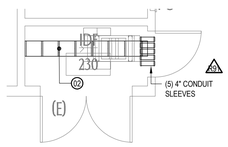

2 OVERHEAD PLAN - IDF-230

SCALE: 1/4" = 1'-0"

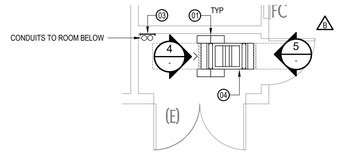

1 ROOM PLAN - IDF-230

SCALE: 1/4" = 1'-0"

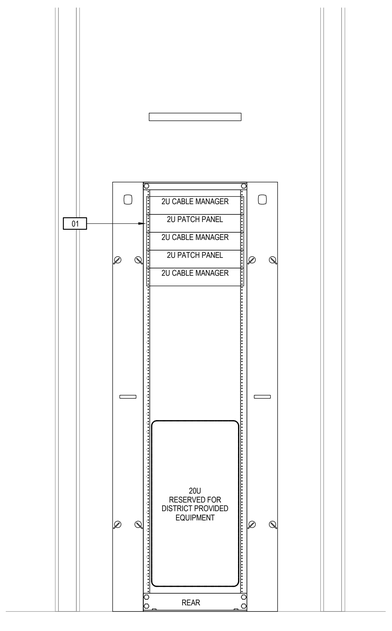

5 RACK ELEVATION - REAR

SCALE: 1" = 1'-0"

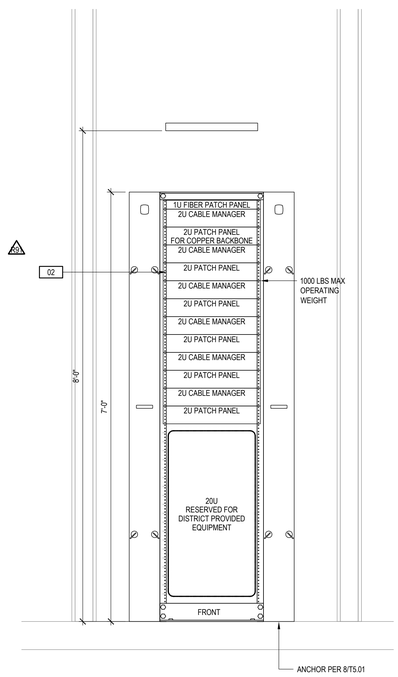

4 RACK ELEVATION - FRONT

SCALE: 1" = 1'-0"

SHEET NOTES

1. COORDINATE THE ROOM LAYOUT AMONG TRADES. DO NOT PLACE PANELS, CABINETS, PIPING, DUCTING OR EQUIPMENT WITH TELECOM ROOMS OTHER THAT SHOWN ON THESE PLANS OR DIRECTLY SUPPORT THE ROOMS' FUNCTION.
2. REFER TO ELECTRICAL DRAWINGS FOR POWER SERVICE (ELECTRICAL CIRCUITS AND RECEPTACLES) AND FOR LIGHTING REQUIREMENTS. OVERHEAD LIGHTING SHOWN ON THIS SHEET IS FOR ROOM LAYOUT/SPATIAL COORDINATION ONLY.
3. PROVIDE PLYWOOD ON WALLS AS MOUNTING BACKBOARD. PLYWOOD SHALL BE 4' X 8' X 3/4" T FIRE TREATED STAMPED WITH FIRE RATING. INSTALL PLYWOOD FROM 0'-6" TO 8'-6" AFF, UON, USING FASTENERS WITH A FLUSH HEAD WITH THE FIRE RATING STAMP FACING IN (VISIBLE FOR INSPECTION). PAINT PLYWOOD WITH WHITE PAINT TO ENHANCE ROOM LIGHTING - DURING PAINTING, MASK FIRE RATING STAMP TO MAINTAIN STAMP'S VISIBILITY.
4. PROVIDE SEISMIC BRACING FOR RACKS, CABINETS, CABLE SUPPORTS, PANELS, ETC., TO MEET APPLICABLE CODES. DO NOT ANCHOR RACKS AND CABINETS TO OVERHEAD CABLE SUPPORT. PROVIDE LABELS AT RACKS AND CABINETS.
5. PROVIDE APPROVED FIRESTOPPING SYSTEMS AT PENETRATIONS THROUGH FIRE RATED WALLS AND FLOORS TO MAINTAIN RATING. PROVIDE APPROVED LABELING FOR FIRESTOPPING SYSTEMS.
6. CABLE TRAY'S DEPTH REFERS TO LOADING DEPTH.
7. PROVIDE RADIUS DROPOUTS WHERE CABLES TRANSITION DOWNWARD FROM OVERHEAD HORIZONTAL CABLE TRAY, WHETHER EXPRESSLY SHOWN OR NOT.
8. INSTALL TERMINATION APPARATUS AND EQUIPMENT TO FRONT OF RACK BAY (FRONT TO FACE FRONT), UON.
9. NEATLY BUNDLE (DRESS CABLES LONGITUDINALLY) AND SUPPORT (USING APPROVED TIES AND AS DESCRIBED IN SPECIFICATIONS) TELECOMMUNICATIONS CABLES ONTO OVERHEAD AND VERTICAL CABLE SUPPORT. NEATLY BUNDLE AND SUPPORT TELECOMMUNICATIONS CABLES INTO THE BACK OF THE VERTICAL MANAGEMENT SECTIONS. DRESS TELECOMMUNICATIONS CABLES FROM THE VERTICAL MANAGEMENT SECTIONS TO THE TERMINATION POSITION WITHIN THE TERMINATION APPARATUS. MAXIMUM BUNDLE SIZE: 24 CABLES.
10. GROUP JACKS IN PATCH PANELS BY SERVICE TYPE. VALIDATE JACK LAYOUT WITH DISTRICT IT PRIOR TO INSTALLATION.
11. VALIDATE FINAL RACK LOCATIONS WITH DISTRICT IT PRIOR TO INSTALLATION.

SYMBOL LEGEND

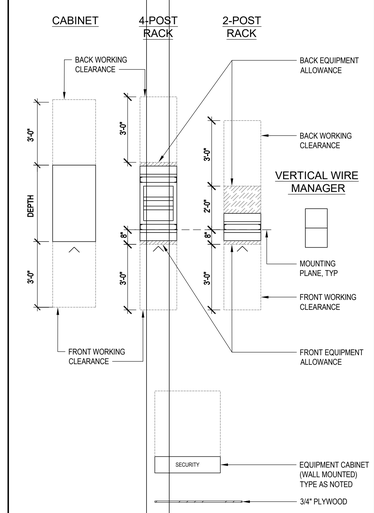

EQUIPMENT LIST

TAG	DESCRIPTION
01	VERTICAL MANAGEMENT SECTION - 6"W, DOUBLE SIDED
02	OVERHEAD CABLE SUPPORT - CABLE RUNWAY, 18" W, BLACK
03	CABLE RUNWAY - 12"W MOUNTED VERTICALLY
04	EQUIPMENT RACK - 4-CHANNEL, 7'0"H x 19"W, BLACK

NUMBERED NOTES

01 PATCH PANEL RESERVED FOR ROOM 202 CABLING.

02 CONSOLIDATE WAP TERMINATIONS IN THE SAME PATCH PANEL. ORDER TERMINATIONS BY ASCENDING ROOM NUMBER.

tBP
architecture
planning
interiors

tBP/Architecture
1777 Oakland Boulevard, Suite 320
Walnut Creek, CA 94596
ph: 925.246.6419

architect

TEECOM
1333 Broadway, Suite 601
Oakland, CA 94612
510-337-2800
510-337-2804 fax
www.teecom.com

consultant

IDENTIFICATION STAMP
DIV. OF THE STATE ARCHITECT
OFFICE OF REGULATION SERVICES
APPL # 01-
FILE NO. 17-C1
AC ___ KS ___ SS ___
DATE ___

DIVISION OF THE STATE ARCHITECT
1515 CLAY STREET
OAKLAND, CA94612
ph:(510) 622-3101

agency

C-4008 APPLIED ARTS & ADMIN RENOVATION

2600 MISSION BELL DRIVE, SAN PABLO, CA 94806

CONTRA COSTA COMMUNITY COLLEGE DISTRICT
500 COURT STREET MARTINEZ, CA 94553

owner

tBP project number: 20865.00
file name:
drawn by: checked by:
date: July 06, 2018

rev:	date:	description:
	4/30/2019	RECORD SET

THIS DRAWING AND THE DESIGNS, DEPICTIONS, IDEAS AND OTHER INFORMATION CONTAINED HEREIN CONSTITUTE UNPUBLISHED WORK OF tBP/ARCHITECTURE AND SHALL REMAIN PROPERTY OF tBP/ARCHITECTURE IN PERPETUITY. NO PART THEREOF SHALL BE REPRODUCED, DISCLOSED, DISTRIBUTED, SOLD, PUBLISHED OR OTHERWISE USED IN ANY WAY WITHOUT THE ADVANCED EXPRESS WRITTEN CONSENT OF tBP/ARCHITECTURE.

drawing title: ROOM PLAN - TELEPHONE 230

drawing no.: T4.02

drawing of

Record Dwgs

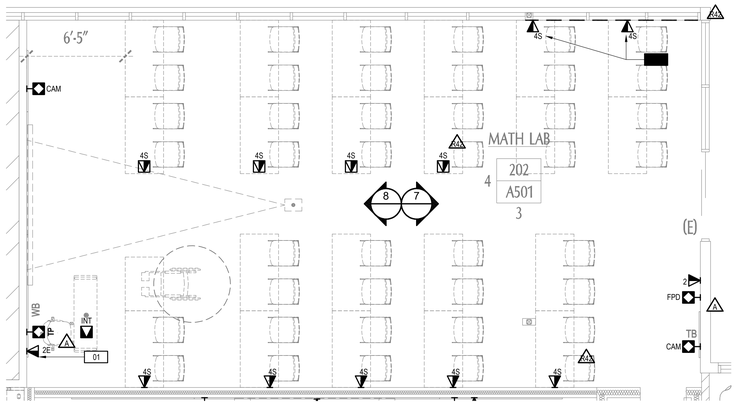

2 INFRASTRUCTURE PLAN - MATH LAB 202

SCALE: 1/4" = 1'-0"

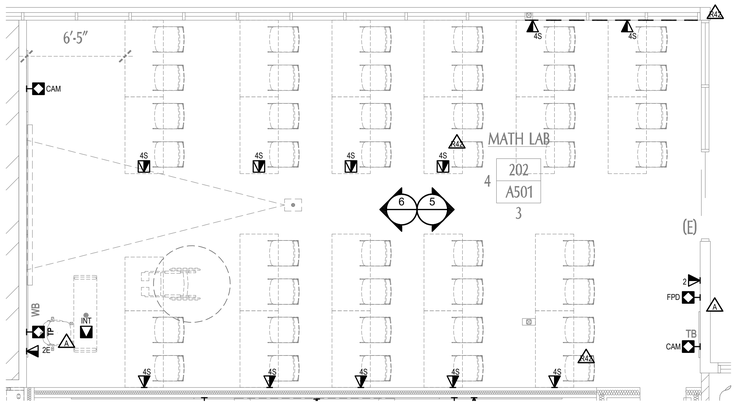

1 EQUIPMENT PLAN - MATH LAB 202

SCALE: 1/4" = 1'-0"

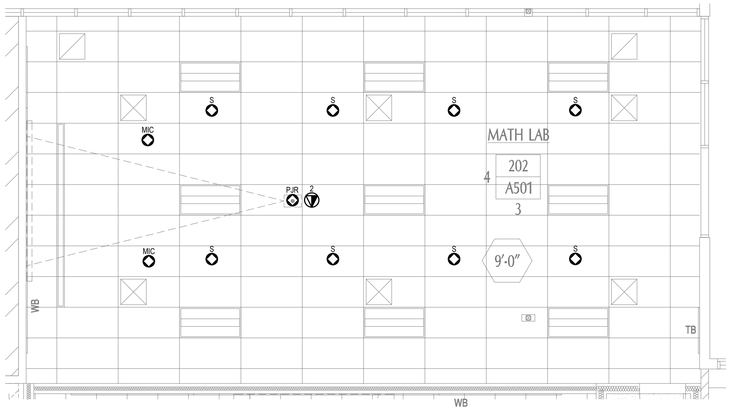

3 REFLECTED CEILING PLAN - MATH LAB 202

SCALE: 1/4" = 1'-0"

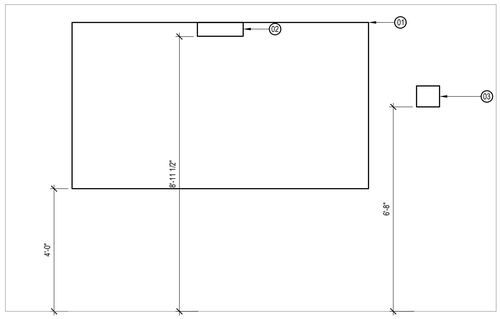

6 EQUIPMENT ELEVATION WEST

SCALE: 1/2" = 1'-0"

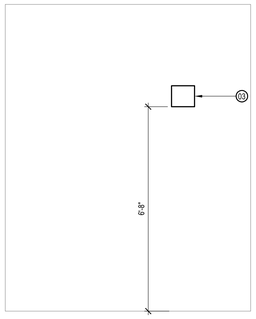

5 EQUIPMENT ELEVATION EAST

SCALE: 1/2" = 1'-0"

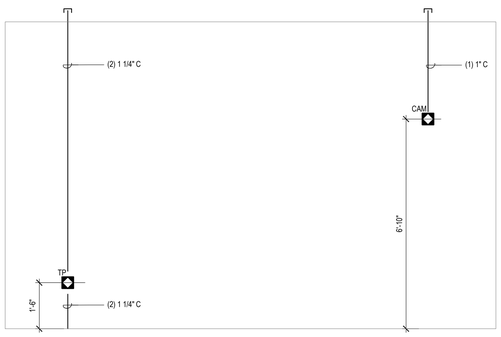

8 INFRASTRUCTURE ELEVATION WEST

SCALE: 1/2" = 1'-0"

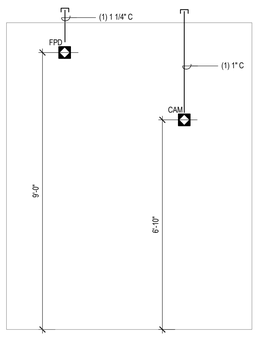

7 INFRASTRUCTURE ELEVATION EAST

SCALE: 1/2" = 1'-0"

NUMBERED NOTES

01	DATA OUTLET FOR EMERGENCY IP SPEAKERS, COORDINATE LOCATION WITH DISTRICT.
02	OUTLETS INSTALLED IN SURFACE MOUNTED RACEWAY SHARED WITH ELECTRICAL.

AV EQUIPMENT LIST

TAG	DESCRIPTION
01	MANUAL PROJECTION SCREEN
02	PROJECTOR
03	CAMERA

tBP
architecture
planning
interiors

tBP/Architecture
1777 Oakland Boulevard, Suite 320
Walnut Creek, CA 94596
ph: 925.246.6419

architect

TEECOM
1333 Broadway, Suite 601
Oakland, CA 94612
510-337-2800
510-337-2804 fax
www.teecom.com

consultant

IDENTIFICATION STAMP
DIV. OF THE STATE ARCHITECT
OFFICE OF REGULATION SERVICES
APPL # 01-
FILE NO. 7-C1
AC ____ KS ____ SS ____
DATE ____

DIVISION OF THE STATE ARCHITECT
1515 CLAY STREET
OAKLAND, CA94612
ph:(510) 622-3101

agency

C-4008 APPLIED ARTS & ADMIN RENOVATION

2600 MISSION BELL DRIVE, SAN PABLO, CA 94806

CONTRA COSTA COMMUNITY COLLEGE DISTRICT
500 COURT STREET MARTINEZ, CA 94553

owner

tBP project number: 20865.00
file name:
drawn by: checked by:
date: July 06, 2018

rev:	date:	description:
	4/30/2019	RECORD SET

THIS DRAWING AND THE DESIGNS, DEPICTIONS, IDEAS AND OTHER INFORMATION CONTAINED HEREIN CONSTITUTE UNPUBLISHED WORK OF tBP/ARCHITECTURE AND SHALL REMAIN PROPERTY OF tBP/ARCHITECTURE IN PERPETUITY. NO PART THEREOF SHALL BE REPRODUCED, DISCLOSED, DISTRIBUTED, SOLD, PUBLISHED OR OTHERWISE USED IN ANY WAY WITHOUT THE ADVANCED EXPRESS WRITTEN CONSENT OF tBP/ARCHITECTURE.

drawing title: ROOM PLAN - MATH LAB 202

drawing no.: T4.11

drawing of

Record Dwgs

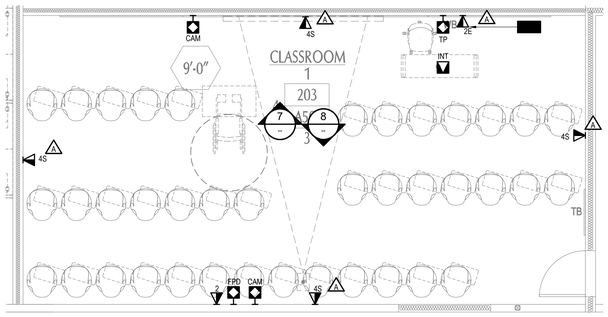

2 INFRASTRUCTURE PLAN - CLASSROOM 203

SCALE: 1/4" = 1'-0"

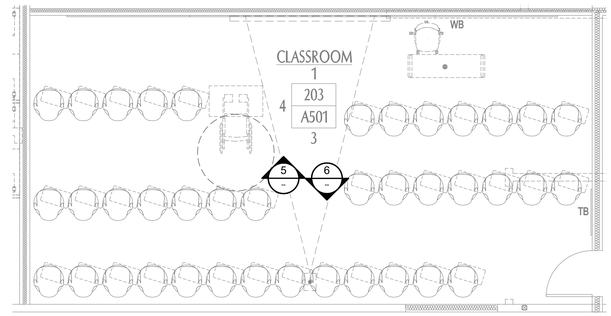

1 EQUIPMENT PLAN - CLASSROOM 203

SCALE: 1/4" = 1'-0"

NUMBERED NOTES

01	DATA OUTLET FOR EMERGENCY IP SPEAKERS, COORDINATE LOCATION WITH DISTRICT

AV EQUIPMENT LIST

TAG	DESCRIPTION
01	MANUAL PROJECTION SCREEN
02	PROJECTOR
03	CAMERA

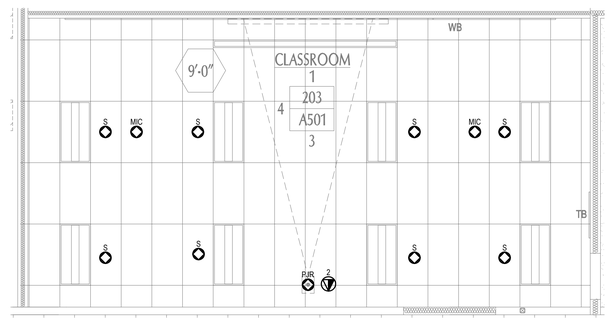

3 REFLECTED CEILING PLAN - CLASSROOM 203

SCALE: 1/4" = 1'-0"

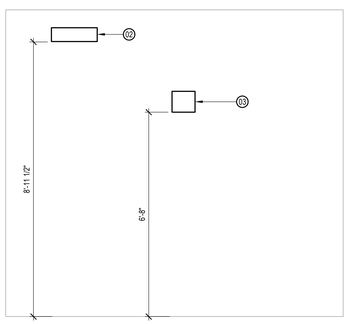

6 EQUIPMENT ELEVATION SOUTH

SCALE: 1/2" = 1'-0"

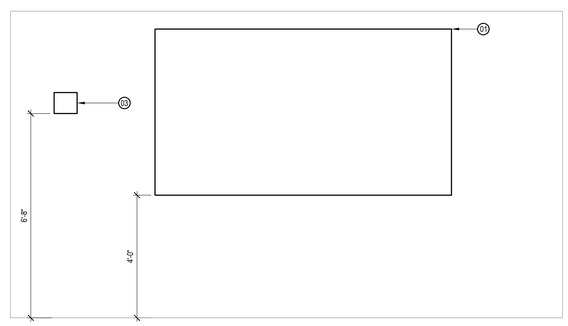

5 EQUIPMENT ELEVATION NORTH

SCALE: 1/2" = 1'-0"

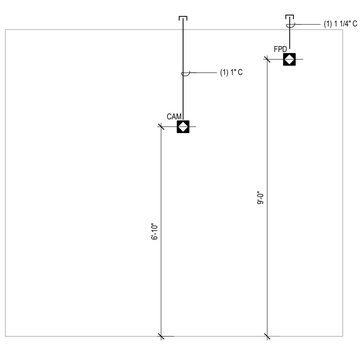

8 INFRASTRUCTURE ELEVATION SOUTH

SCALE: 1/2" = 1'-0"

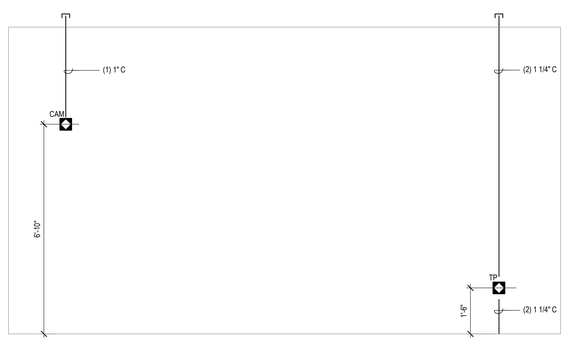

7 INFRASTRUCTURE ELEVATION NORTH

SCALE: 1/2" = 1'-0"

tBP
architecture
planning
interiors
tBP/Architecture
1777 Oakland Boulevard, Suite 320
Walnut Creek, CA 94596
ph: 925.246.6419
architect

TEECOM
1333 Broadway, Suite 601
Oakland, CA 94612
510-337-2800
510-337-2804 fax
www.teecom.com
consultant

DIVISION OF THE STATE ARCHITECT
1515 CLAY STREET
OAKLAND, CA94612
ph:(510) 622-3101
agency

DENTIFICATION STAMP
DIV. OF THE STATE ARCHITECT
OFFICE OF REGULATION SERVICES
APPL # 01-
FILE NO. 72-C1
AC ____ KS ____ SS ____
DATE ____

C-4008 APPLIED ARTS & ADMIN RENOVATION

2600 MISSION BELL DRIVE, SAN PABLO, CA 94806

CONTRA COSTA COMMUNITY COLLEGE DISTRICT
500 COURT STREET MARTINEZ, CA 94553

owner

tBP project number:	20865.00
file name:	
drawn by:	checked by:
date:	July 06, 2018

rev:	date:	description:
	4/30/2019	RECORD SET

THIS DRAWING AND THE DESIGNS, DEPICTIONS, IDEAS AND OTHER INFORMATION CONTAINED HEREIN CONSTITUTE UNPUBLISHED WORK OF tBP/ARCHITECTURE AND SHALL REMAIN PROPERTY OF tBP/ARCHITECTURE IN PERPETUITY. NO PART THEREOF SHALL BE REPRODUCED, DISCLOSED, DISTRIBUTED, SOLD, PUBLISHED OR OTHERWISE USED IN ANY WAY WITHOUT THE ADVANCED EXPRESS WRITTEN CONSENT OF tBP/ARCHITECTURE.

drawing title:
ROOM ELEVATIONS - CLASSROOM 203

drawing no.:
T4.12

drawing of

Record Dwgs

NUMBERED NOTES

01	DATA OUTLET FOR EMERGENCY IP SPEAKERS, COORDINATE LOCATION WITH DISTRICT

AV EQUIPMENT LIST

TAG	DESCRIPTION
01	MANUAL PROJECTION SCREEN

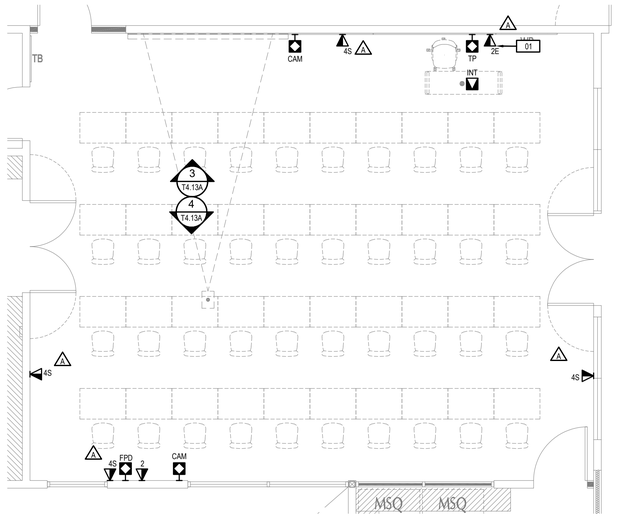

8 INFRASTRUCTURE PLAN - CLASSROOM 212

SCALE: 1/4" = 1'-0"

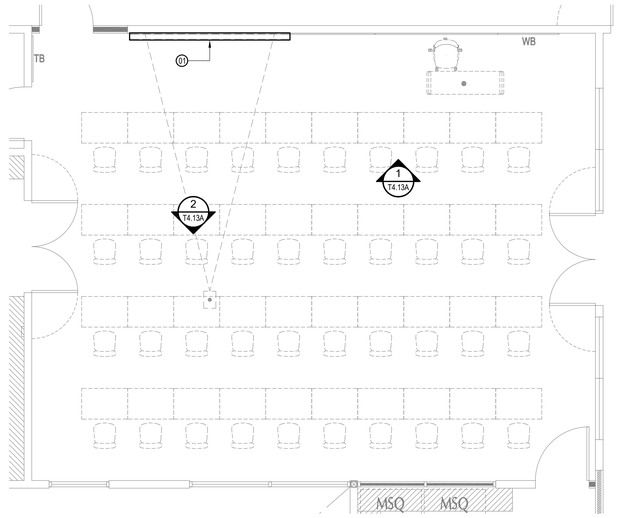

6 EQUIPMENT PLAN - CLASSROOM 212

SCALE: 1/4" = 1'-0"

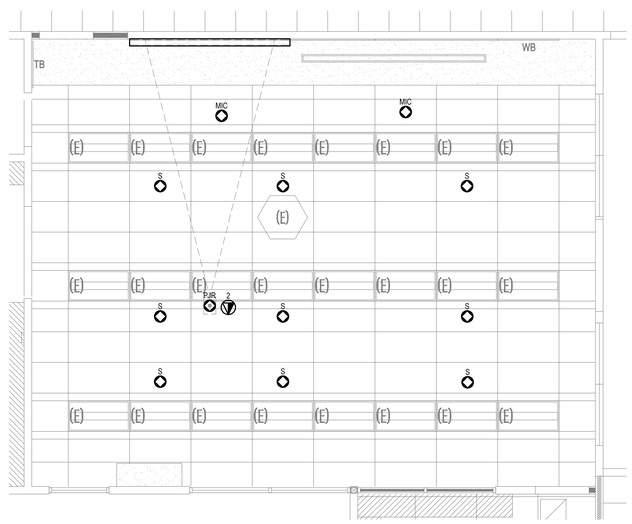

14 REFLECTED CEILING PLAN - CLASSROOM 212

SCALE: 1/4" = 1'-0"

tBP
architecture
planning
interiors

tBP/Architecture
1777 Oakland Boulevard, Suite 320
Walnut Creek, CA 94596
ph: 925.246.6419

architect

TEECOM
1333 Broadway, Suite 601
Oakland, CA 94612
510-337-2800
510-337-2804 fax
www.teecom.com

consultant

IDENTIFICATION STAMP
DIV. OF THE STATE ARCHITECT
OFFICE OF REGULATION SERVICES
APPL # 01-
FILE NO. 7-C1
AC ___ KS ___ SS ___
DATE ___

DIVISION OF THE STATE ARCHITECT
1515 CLAY STREET
OAKLAND, CA94612
ph:(510) 622-3101

agency

C-4008 APPLIED ARTS & ADMIN RENOVATION

2600 MISSION BELL DRIVE, SAN PABLO, CA 94806

CONTRA COSTA COMMUNITY COLLEGE DISTRICT
500 COURT STREET MARTINEZ, CA 94553

owner

tBP project number: 20865.00
file name:
drawn by: checked by:
date: July 06, 2018

rev:	date:	description:
	4/30/2019	RECORD SET

THIS DRAWING AND THE DESIGNS, DEPICTIONS, IDEAS AND OTHER INFORMATION CONTAINED HEREIN CONSTITUTE UNPUBLISHED WORK OF tBP/ARCHITECTURE AND SHALL REMAIN PROPERTY OF tBP/ARCHITECTURE IN PERPETUITY. NO PART THEREOF SHALL BE REPRODUCED, DISCLOSED, DISTRIBUTED, SOLD, PUBLISHED OR OTHERWISE USED IN ANY WAY WITHOUT THE ADVANCED EXPRESS WRITTEN CONSENT OF tBP/ARCHITECTURE.

drawing title: ROOM PLAN - CLASSROOM 212

drawing no.: T4.13

drawing of

Record Dwgs

AV EQUIPMENT LIST

TAG	DESCRIPTION
01	MANUAL PROJECTION SCREEN
02	PROJECTOR
03	CAMERA

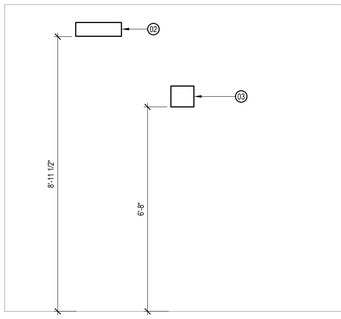

2 EQUIPMENT ELEVATION - SOUTH

SCALE: 1/2" = 1'-0"

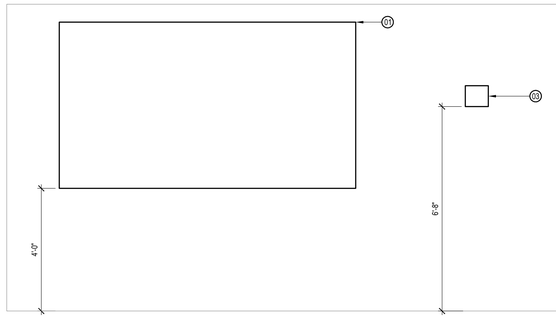

1 EQUIPMENT ELEVATION - NORTH

SCALE: 1/2" = 1'-0"

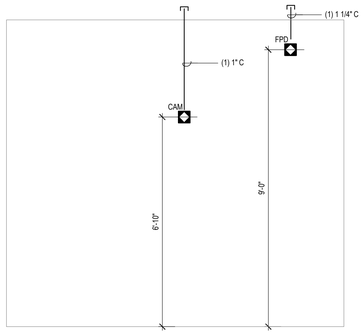

4 INFRASTRUCTURE ELEVATION - SOUTH

SCALE: 1/2" = 1'-0"

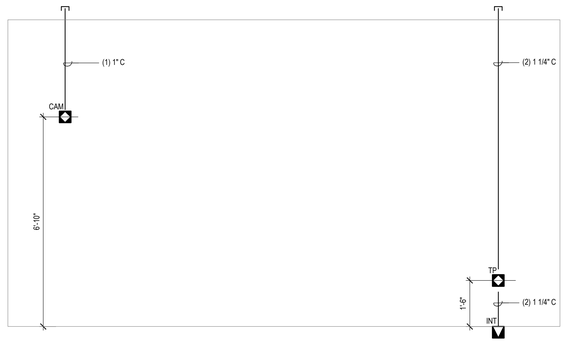

3 INFRASTRUCTURE ELEVATION - NORTH

SCALE: 1/2" = 1'-0"

tBP
architecture
planning
interiors

tBP/Architecture
1777 Oakland Boulevard, Suite 320
Walnut Creek, CA 94596
ph: 925.246.6419

architect

TEECOM
1333 Broadway, Suite 601
Oakland, CA 94612
510-337-2800
510-337-2804 fax
www.teecom.com

consultant

IDENTIFICATION STAMP
DIV. OF THE STATE ARCHITECT
OFFICE OF REGULATION SERVICES
APPL # 01-
FILE NO. 7-C1
AC ____ KS ____ SS ____
DATE ____

DIVISION OF THE STATE ARCHITECT
1515 CLAY STREET
OAKLAND, CA94612
ph:(510) 622-3101

agency

C-4008 APPLIED ARTS & ADMIN RENOVATION

2600 MISSION BELL DRIVE, SAN PABLO, CA 94806

CONTRA COSTA COMMUNITY COLLEGE DISTRICT
500 COURT STREET MARTINEZ, CA 94553

owner

tBP project number: 20865.00
file name:
drawn by: checked by:
date: July 06, 2018

rev:	date:	description:
	4/30/2019	RECORD SET

THIS DRAWING AND THE DESIGNS, DEPICTIONS, IDEAS AND OTHER INFORMATION CONTAINED HEREIN CONSTITUTE UNPUBLISHED WORK OF tBP/ARCHITECTURE AND SHALL REMAIN PROPERTY OF tBP/ARCHITECTURE IN PERPETUITY. NO PART THEREOF SHALL BE REPRODUCED, DISCLOSED, DISTRIBUTED, SOLD, PUBLISHED OR OTHERWISE USED IN ANY WAY WITHOUT THE ADVANCED EXPRESS WRITTEN CONSENT OF tBP/ARCHITECTURE.

drawing title: ROOM ELEVATIONS - CLASSROOM 212

drawing no.: T4.13A

drawing of

Record Dwgs

NUMBERED NOTES

01	DATA OUTLET FOR EMERGENCY IP SPEAKERS, COORDINATE LOCATION WITH DISTRICT

AV EQUIPMENT LIST

TAG	DESCRIPTION
01	MANUAL PROJECTION SCREEN
02	PROJECTOR
03	CAMERA

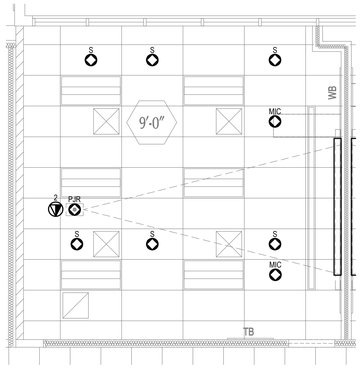

3 REFLECTED CEILING PLAN - CLASSROOM 201A

SCALE: 1/4" = 1'-0"

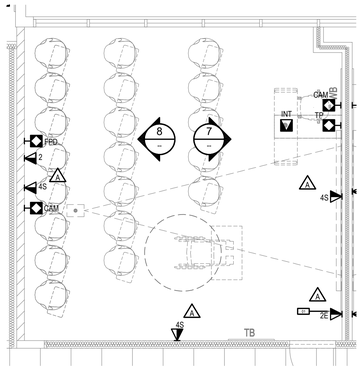

2 INFRASTRUCTURE PLAN - CLASSROOM 201A

SCALE: 1/4" = 1'-0"

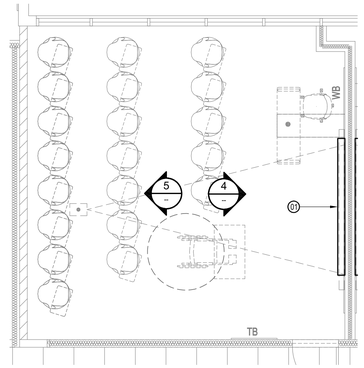

1 EQUIPMENT PLAN - CLASSROOM 201A

SCALE: 1/4" = 1'-0"

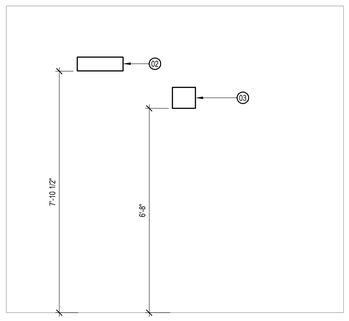

5 EQUIPMENT ELEVATION - WEST

SCALE: 1/2" = 1'-0"

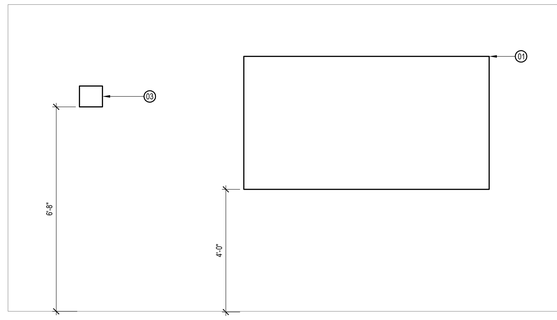

4 EQUIPMENT ELEVATION - EAST

SCALE: 1/2" = 1'-0"

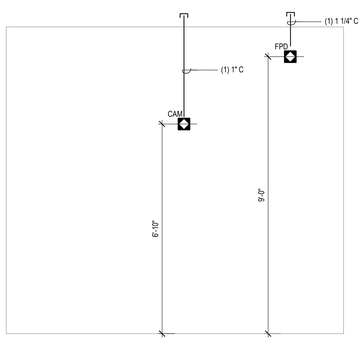

8 INFRASTRUCTURE ELEVATION - WEST

SCALE: 1/2" = 1'-0"

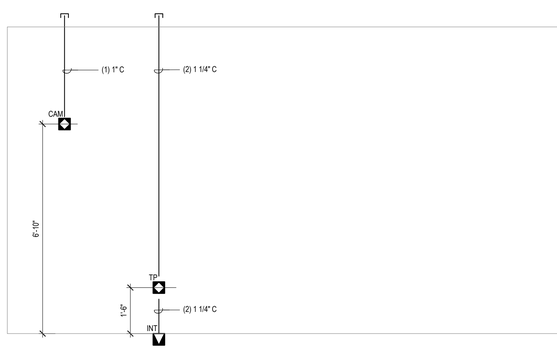

7 INFRASTRUCTURE ELEVATION - EAST

SCALE: 1/2" = 1'-0"

tBP
architecture
planning
interiors

tBP/Architecture
1777 Oakland Boulevard, Suite 320
Walnut Creek, CA 94596
ph: 925.246.6419

architect

TEECOM
1333 Broadway, Suite 601
Oakland, CA 94612
510-337-2800
510-337-2804 fax
www.teecom.com

consultant

IDENTIFICATION STAMP
DIV. OF THE STATE ARCHITECT
OFFICE OF REGULATION SERVICES
APPL # 01-
FILE NO. 7-C1
AC ____ KS ____ SS ____
DATE ____

DIVISION OF THE STATE ARCHITECT
1515 CLAY STREET
OAKLAND, CA94612
ph:(510) 622-3101

agency

C-4008 APPLIED ARTS & ADMIN RENOVATION

2600 MISSION BELL DRIVE, SAN PABLO, CA 94806

CONTRA COSTA COMMUNITY COLLEGE DISTRICT
500 COURT STREET MARTINEZ, CA 94553

owner

tBP project number:	20865.00
file name:	
drawn by:	checked by:
date:	July 06, 2018

rev:	date:	description:
	4/30/2019	RECORD SET

THIS DRAWING AND THE DESIGNS, DEPICTIONS, IDEAS AND OTHER INFORMATION CONTAINED HEREIN CONSTITUTE UNPUBLISHED WORK OF tBP/ARCHITECTURE AND SHALL REMAIN PROPERTY OF tBP/ARCHITECTURE IN PERPETUITY. NO PART THEREOF SHALL BE REPRODUCED, DISCLOSED, DISTRIBUTED, SOLD, PUBLISHED OR OTHERWISE USED IN ANY WAY WITHOUT THE ADVANCED EXPRESS WRITTEN CONSENT OF tBP/ARCHITECTURE.

drawing title: ROOM PLAN - CLASSROOM 201A

drawing no.: T4.14

drawing of

Record Dwgs

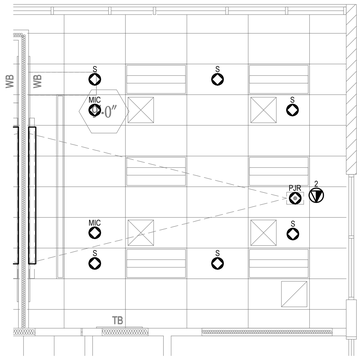

3 REFLECTED CEILING PLAN - CLASSROOM 201B

SCALE: 1/4" = 1'-0"

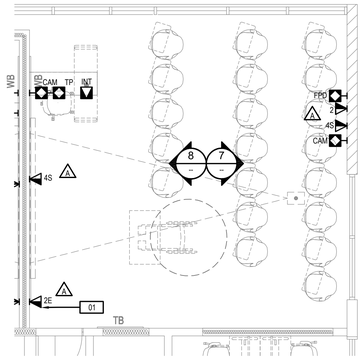

2 INFRASTRUCTURE PLAN - CLASSROOM 201B

SCALE: 1/4" = 1'-0"

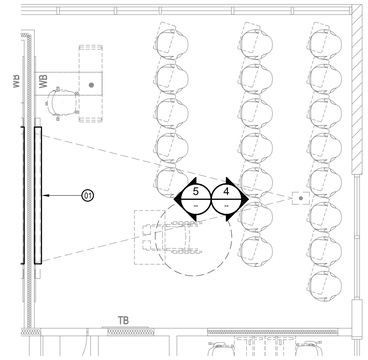

1 EQUIPMENT PLAN - CLASSROOM 201B

SCALE: 1/4" = 1'-0"

NUMBERED NOTES

01	DATA OUTLET FOR EMERGENCY IP SPEAKERS, COORDINATE LOCATION WITH DISTRICT

AV EQUIPMENT LIST

TAG	DESCRIPTION
01	MANUAL PROJECTION SCREEN
02	PROJECTOR
03	CAMERA

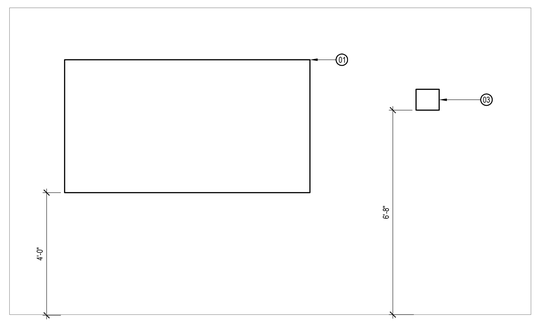

5 EQUIPMENT ELEVATION - WEST

SCALE: 1/2" = 1'-0"

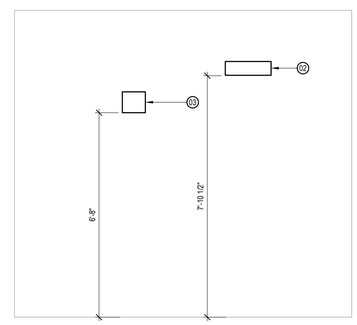

4 EQUIPMENT ELEVATION - EAST

SCALE: 1/2" = 1'-0"

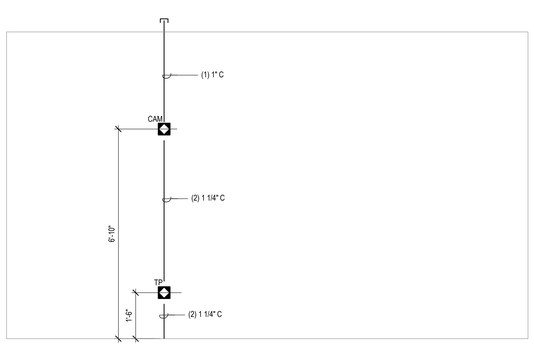

8 INFRASTRUCTURE ELEVATION - WEST

SCALE: 1/2" = 1'-0"

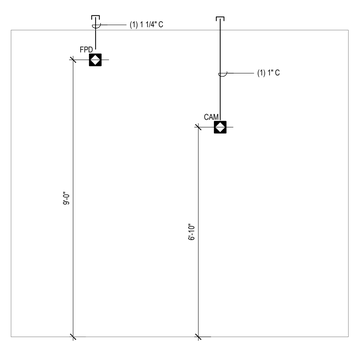

7 INFRASTRUCTURE ELEVATION - EAST

SCALE: 1/2" = 1'-0"

tBP
architecture
planning
interiors

tBP/Architecture
1777 Oakland Boulevard, Suite 320
Walnut Creek, CA 94596
ph: 925.246.6419

architect

TEECOM
1333 Broadway, Suite 601
Oakland, CA 94612
510-337-2800
510-337-2804 fax
www.teecom.com

consultant

IDENTIFICATION STAMP
DIV. OF THE STATE ARCHITECT
OFFICE OF REGULATION SERVICES
APPL # 01-
FILE NO. 7-C1
AC ____ KS ____ SS ____
DATE ____

DIVISION OF THE STATE ARCHITECT
1515 CLAY STREET
OAKLAND, CA94612
ph:(510) 622-3101

agency

C-4008 APPLIED ARTS & ADMIN RENOVATION

2600 MISSION BELL DRIVE, SAN PABLO, CA 94806

CONTRA COSTA COMMUNITY COLLEGE DISTRICT
500 COURT STREET MARTINEZ, CA 94553

owner

tBP project number:	20865.00
file name:	
drawn by:	checked by:
date:	July 06, 2018

rev:	date:	description:
	4/30/2019	RECORD SET

THIS DRAWING AND THE DESIGNS, DEPICTIONS, IDEAS AND OTHER INFORMATION CONTAINED HEREIN CONSTITUTE UNPUBLISHED WORK OF tBP/ARCHITECTURE AND SHALL REMAIN PROPERTY OF tBP/ARCHITECTURE IN PERPETUITY. NO PART THEREOF SHALL BE REPRODUCED, DISCLOSED, DISTRIBUTED, SOLD, PUBLISHED OR OTHERWISE USED IN ANY WAY WITHOUT THE ADVANCED EXPRESS WRITTEN CONSENT OF tBP/ARCHITECTURE.

drawing title: ROOM PLAN - CLASSROOM 201B

drawing no.: T4.15

drawing of

Record Dwgs

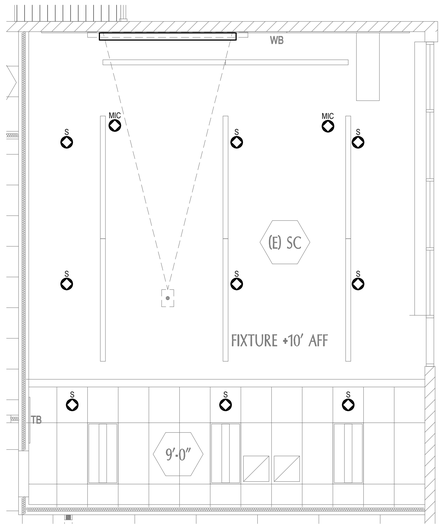

3 REFLECTED CEILING PLAN - CLASSROOM 239D

SCALE: 1/4" = 1'-0"

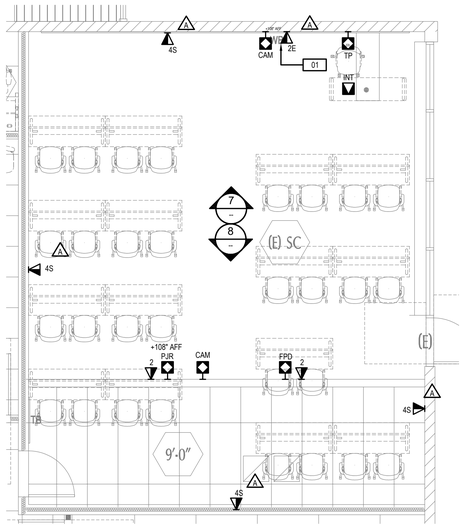

2 INFRASTRUCTURE PLAN - CLASSROOM 239D

SCALE: 1/4" = 1'-0"

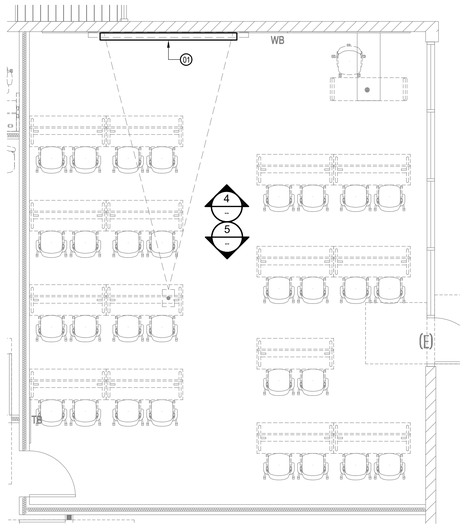

1 EQUIPMENT PLAN - CLASSROOM 239D

SCALE: 1/4" = 1'-0"

NUMBERED NOTES

01	DATA OUTLET FOR EMERGENCY IP SPEAKERS, COORDINATE LOCATION WITH DISTRICT

AV EQUIPMENT LIST

TAG	DESCRIPTION
01	MANUAL PROJECTION SCREEN
02	PROJECTOR
03	CAMERA

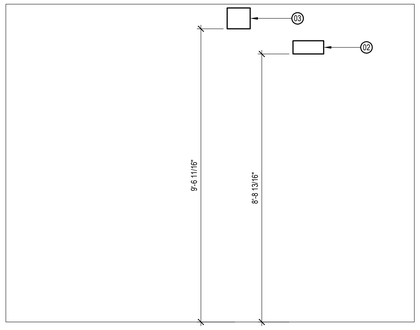

5 EQUIPMENT ELEVATION - SOUTH

SCALE: 1/2" = 1'-0"

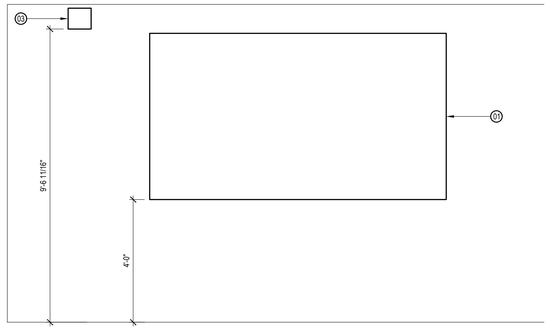

4 EQUIPMENT ELEVATION - NORTH

SCALE: 1/2" = 1'-0"

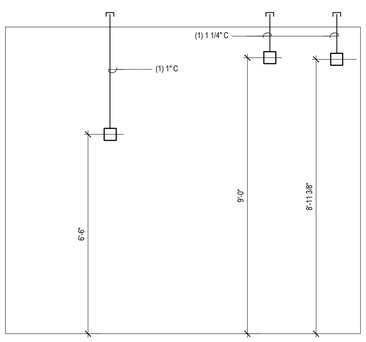

8 INFRASTRUCTURE ELEVATION - SOUTH

SCALE: 1/2" = 1'-0"

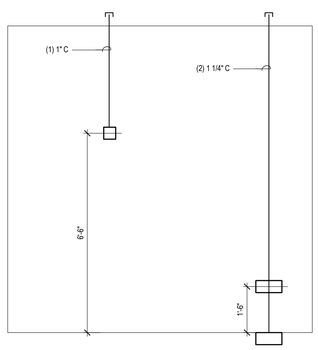

7 INFRASTRUCTURE ELEVATION - NORTH

SCALE: 1/2" = 1'-0"

tBP
architecture
planning
interiors

tBP/Architecture
1777 Oakland Boulevard, Suite 320
Walnut Creek, CA 94596
ph: 925.246.6419

architect

TEECOM
1333 Broadway, Suite 601
Oakland, CA 94612
510-337-2800
510-337-2804 fax
www.teecom.com

consultant

IDENTIFICATION STAMP
DIV. OF THE STATE ARCHITECT
OFFICE OF REGULATION SERVICES
APPL # 01-
FILE NO. 7-C1
AC ____ KS ____ SS ____
DATE ____

DIVISION OF THE STATE ARCHITECT
1515 CLAY STREET
OAKLAND, CA94612
ph:(510) 622-3101

agency

C-4008 APPLIED ARTS & ADMIN RENOVATION

2600 MISSION BELL DRIVE, SAN PABLO, CA 94806

CONTRA COSTA COMMUNITY COLLEGE DISTRICT
500 COURT STREET MARTINEZ, CA 94553

owner

tBP project number: 20865.00
file name:
drawn by: checked by:
date: July 06, 2018

rev:	date:	description:
	4/30/2019	RECORD SET

THIS DRAWING AND THE DESIGNS, DEPICTIONS, IDEAS AND OTHER INFORMATION CONTAINED HEREIN CONSTITUTE UNPUBLISHED WORK OF tBP/ARCHITECTURE AND SHALL REMAIN PROPERTY OF tBP/ARCHITECTURE IN PERPETUITY. NO PART THEREOF SHALL BE REPRODUCED, DISCLOSED, DISTRIBUTED, SOLD, PUBLISHED OR OTHERWISE USED IN ANY WAY WITHOUT THE ADVANCED EXPRESS WRITTEN CONSENT OF tBP/ARCHITECTURE.

drawing title: ROOM PLAN - CLASSROOM 239D

drawing no.: T4.16

drawing of

Record Dwgs

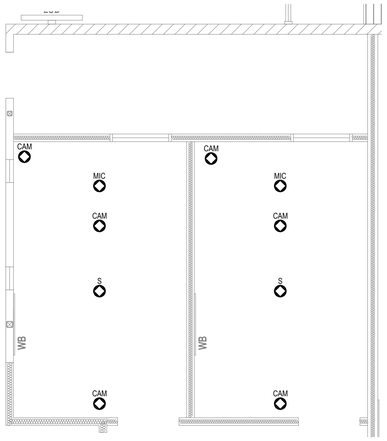

3 REFLECTED CEILING PLAN - SIM LAB/CONTROL

SCALE: 1/4" = 1'-0"

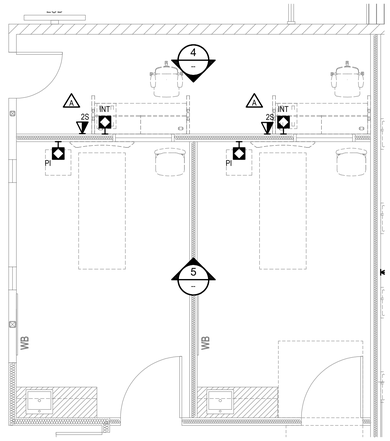

2 INFRASTRUCTURE PLAN - SIM LAB/CONTROL

SCALE: 1/4" = 1'-0"

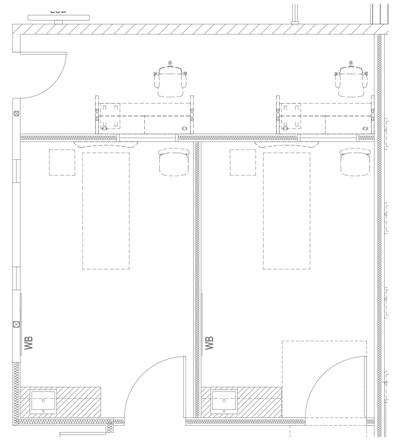

1 EQUIPMENT PLAN - SIM LAB/CONTROL

SCALE: 1/4" = 1'-0"

AV EQUIPMENT LIST	
TAG	DESCRIPTION
01	FLAT PANEL DIPSLAY
02	AV INTERFACE
03	

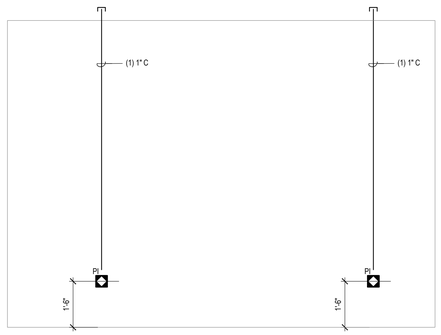

5 INFRASTRUCTURE ELEVATION - NORTH

SCALE: 1/2" = 1'-0"

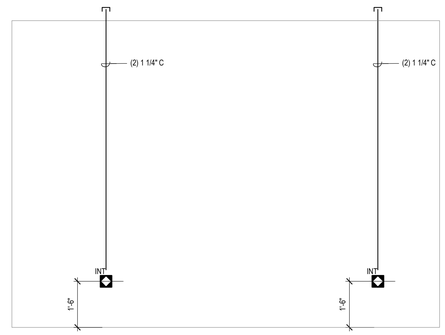

4 INFRASTRUCTURE ELEVATION - SOUTH

SCALE: 1/2" = 1'-0"

tBP
architecture
planning
interiors

tBP/Architecture
1777 Oakland Boulevard, Suite 320
Walnut Creek, CA 94596
ph: 925.246.6419

architect

TEECOM
1333 Broadway, Suite 601
Oakland, CA 94612
510-337-2800
510-337-2804 fax
www.teecom.com

consultant

DIVISION OF THE STATE ARCHITECT
1515 CLAY STREET
OAKLAND, CA94612
ph:(510) 622-3101

agency

DENTIFICATION STAMP
DIV. OF THE STATE ARCHITECT
OFFICE OF REGULATION SERVICES
APPL # 01-
FILE NO. 7-C1
AC ___ KS ___ SS ___
DATE ___

C-4008 APPLIED ARTS & ADMIN RENOVATION

2600 MISSION BELL DRIVE, SAN PABLO, CA 94806

CONTRA COSTA COMMUNITY COLLEGE DISTRICT
500 COURT STREET MARTINEZ, CA 94553

owner

tBP project number:	20865.00
file name:	
drawn by:	checked by:
date:	July 06, 2018

rev:	date:	description:
	4/30/2019	RECORD SET

THIS DRAWING AND THE DESIGNS, DEPICTIONS, IDEAS AND OTHER INFORMATION CONTAINED HEREIN CONSTITUTE UNPUBLISHED WORK OF tBP/ARCHITECTURE AND SHALL REMAIN PROPERTY OF tBP/ARCHITECTURE IN PERPETUITY. NO PART THEREOF SHALL BE REPRODUCED, DISCLOSED, DISTRIBUTED, SOLD, PUBLISHED OR OTHERWISE USED IN ANY WAY WITHOUT THE ADVANCED EXPRESS WRITTEN CONSENT OF tBP/ARCHITECTURE.

drawing title:
ROOM PLAN - SIM LAB / CONTROL ROOM

drawing no.:

T4.17

drawing of

Record Dwgs

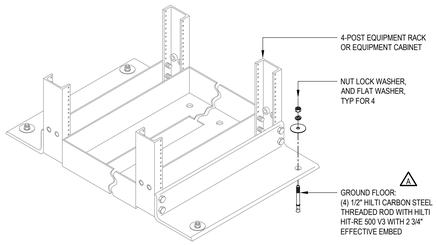

NOTES:
1. REFER TO ROOM PLANS FOR EQUIPMENT RACK TYPE, SIZE, AND LOCATION(S).

4 4-POST EQUIPMENT RACK ANCHOR

SCALE: NONE

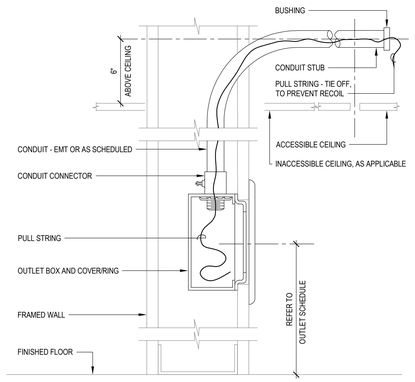

NOTES:
1. TYPICAL INSTALLATION FOR INTERIOR AND PERIMETER FRAMED WALLS, INSULATED OR NON-INSULATED.
2. STUB CONDUIT ABOVE ACCESSIBLE CEILING, AS APPLICABLE, EXTEND CONDUIT OVER INACCESSIBLE CEILING TO ABOVE ACCESSIBLE CEILING, OR EXTEND TO PRIMARY PATHWAY OR TELECOM ROOM.
3. REFER TO OUTLET SCHEDULE FOR OUTLET BOX, COVER/RING, CONDUIT REQUIREMENTS.
4. COMPLY WITH CONDUIT PATHWAY REQUIREMENTS PER T0.02.

3 TELECOM OUTLET ROUGH-IN FRAMED WALL

SCALE: NONE

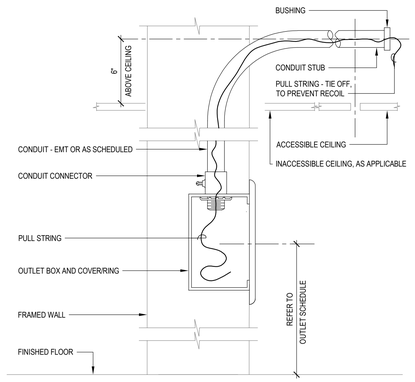

NOTES:
1. TYPICAL INSTALLATION FOR INTERIOR AND PERIMETER CONCRETE CAST-IN-PLACE WALLS.
2. STUB CONDUIT ABOVE ACCESSIBLE CEILING. AS APPLICABLE, EXTEND CONDUIT OVER INACCESSIBLE CEILING TO ABOVE ACCESSIBLE CEILING, OR EXTEND TO PRIMARY PATHWAY OR TELECOM ROOM.
3. REFER TO OUTLET SCHEDULE FOR OUTLET BOX, COVER/RING, CONDUIT REQUIREMENTS.
4. COMPLY WITH CONDUIT PATHWAY REQUIREMENTS PER T0.02.

2 OUTLET - CONCRETE WALL

SCALE: NONE

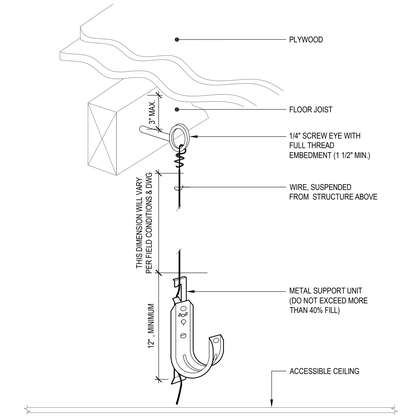

NOTES:
1. SPACE CABLE HANGERS A MAXIMUM 5'-0" ON CENTER WITHIN LAYOUT SHOWN ON FLOOR PLANS.
2. SECURE CABLE HANGER TO DECK USING APPROPRIATE FASTENERS TO MEET LOCAL SEISMIC CODES.
3. REFER TO ARCHITECTURAL DRAWINGS FOR DECK TYPE. SHOWN HERE FOR CLARITY ONLY.
4. REFER TO ARCHITECTURAL DRAWINGS FOR SUSPENDED CEILING TYPE. SHOWN HERE FOR CLARITY ONLY.

1 CABLE HANGER - WIRE SUPPORTED

SCALE: NONE

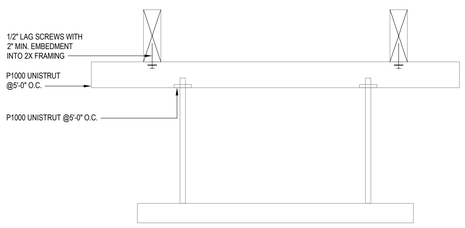

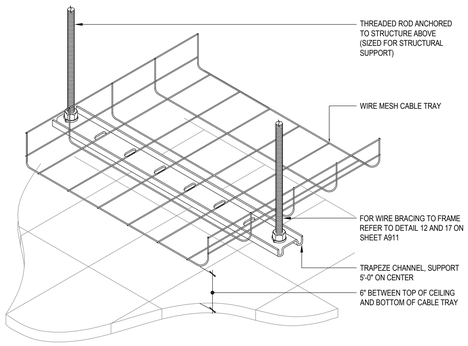

WIRE MESH CABLE TRAY TRAPEZE SUPPORT

7

SCALE: NONE

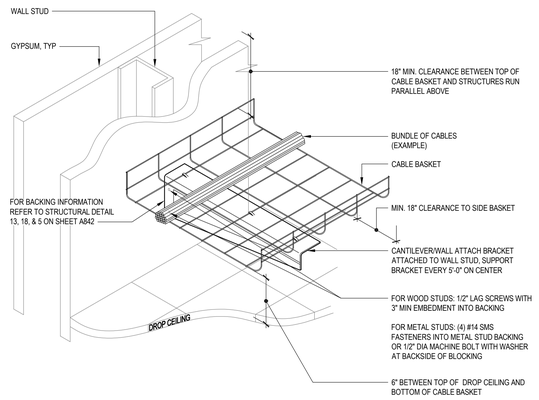

NOTES:
1. SECURE CANTILEVER BRACKET TO WALL USING FASTENERS APPROPRIATE TO STUD TYPE.
2. DETERMINE CANTILEVER BRACKET SEPARATION ACCORDING TO CABLE BASKET LOAD AND SPAN AND TYPE OF STUD.
3. ALSO DETERMINE SUPPORT REQUIREMENTS BASED ON LOCAL SEISMIC CODES.
4. SUPPORT CABLE BASKET WITHIN 24" ON BOTH SIDES OF ANY CONNECTION TO A FITTING.
5. REFER TO TELECOM FLOOR PLANS FOR CABLE BASKET SIZE(S) AND ARCHITECTURAL PLANS FOR DROP CEILING HEIGHT.
6. REFER TO ARCHITECTURAL DRAWINGS FOR WALL TYPE AND CEILING TYPE. SHOWN HERE FOR CLARITY ONLY.

6 USER SPACE - BASKET WALL SUPPORT

SCALE: NONE

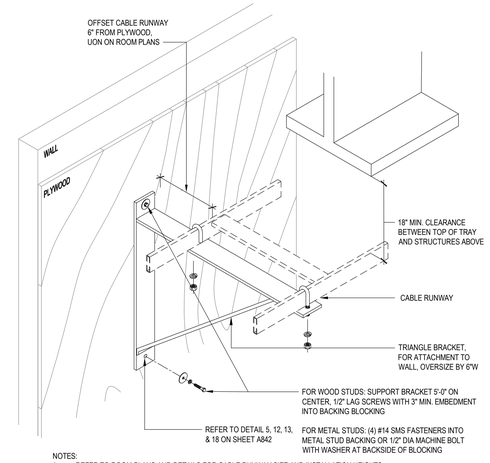

NOTES:
1. REFER TO ROOM PLANS AND DETAILS FOR CABLE RUNWAY SIZE AND INSTALLATION HEIGHTS.
2. SECURE TRIANGLE BRACKET TO PLYWOOD USING APPROPRIATE FASTENERS.
3. REFER TO ARCHITECTURAL DRAWINGS FOR WALL TYPE. SHOWN HERE FOR CLARITY ONLY.

5 RUNWAY BRACING AT WALL

SCALE: NONE

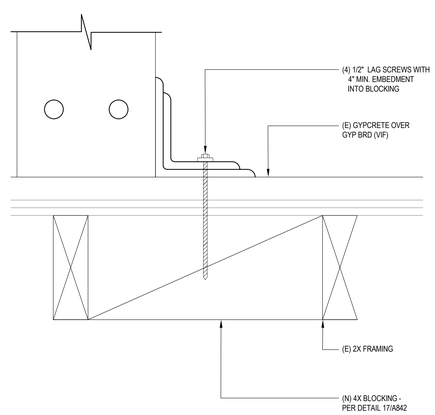

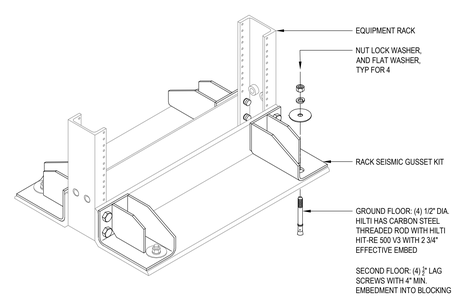

NOTES:
1. REFER TO ROOM PLANS FOR EQUIPMENT RACK TYPE, SIZE, AND LOCATION(S).

8 2-POST EQUIPMENT RACK ANCHOR

SCALE: NONE

tBP architecture planning interiors
tBP/Architecture
1777 Oakland Boulevard, Suite 320
Walnut Creek, CA 94596
ph: 925.246.6419
architect

TEECOM
1333 Broadway, Suite 601
Oakland, CA 94612
510-337-2804
510-337-2806 fax
www.teecom.com
consultant

IDENTIFICATION STAMP
DIV OF THE STATE ARCHITECT
OFFICE OF REGULATION SERVICES
APPL #01-
FILE NO. 7-C1
AC SS
FLS
DATE

DIVISION OF THE STATE ARCHITECT
1515 CLAY STREET
OAKLAND, CA94612
ph:(510) 622-3101
agency

C-4008 APPLIED ARTS & ADMIN RENOVATION

2600 MISSION BELL DRIVE, SAN PABLO, CA 94806

CONTRA COSTA COMMUNITY COLLEGE DISTRICT
500 COURT STREET MARTINEZ, CA 94553

owner

tBP project number: 20865.00
file name:
drawn by: checked by:
date: July 06, 2018

rev:	date:	description:
	4/30/2019	RECORD SET

THIS DRAWING AND THE DESIGNS, DEPICTIONS, IDEAS AND OTHER INFORMATION CONTAINED HEREIN CONSTITUTE UNPUBLISHED WORK OF tBP/ARCHITECTURE AND SHALL REMAIN PROPERTY OF tBP/ARCHITECTURE IN PERPETUITY. NO PART THEREOF SHALL BE REPRODUCED, DISCLOSED, DISTRIBUTED, SOLD, PUBLISHED OR OTHERWISE USED IN ANY WAY WITHOUT THE ADVANCED EXPRESS WRITTEN CONSENT OF tBP/ARCHITECTURE.

drawing title: INSTALLATION DETAILS - TELECOM

drawing no.: T5.01

drawing of

Record Dwgs

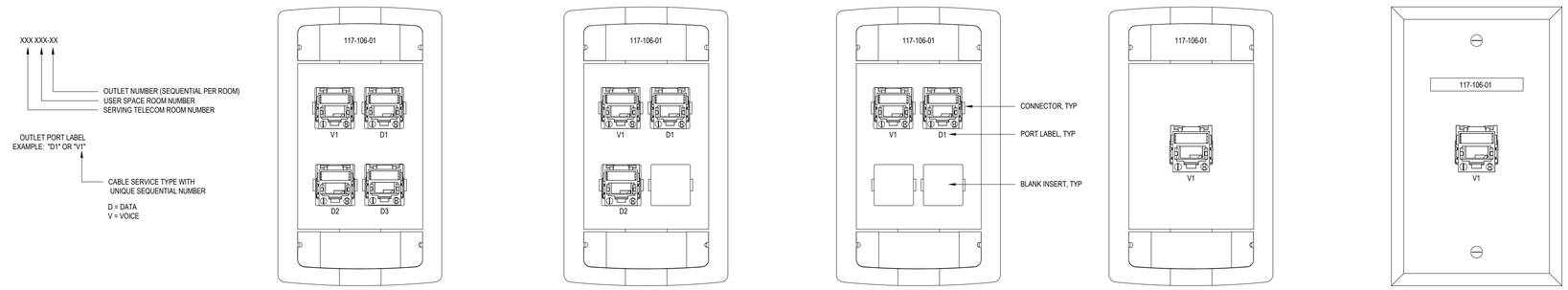

NOTES:
1. ROOM NUMBER SHOWN HERE AS EXAMPLE. REFER TO ARCHITECTURAL PLANS FOR PROJECT ROOM NUMBERS.
2. NOT ALL FACEPLATE CONFIGURATION SHOW HERE. FOLLOWS SAME LABELING FORMAT FOR FACEPLATES NOT SHOWN.

1 LABELING - OUTLET FACEPLATES

SCALE: NONE

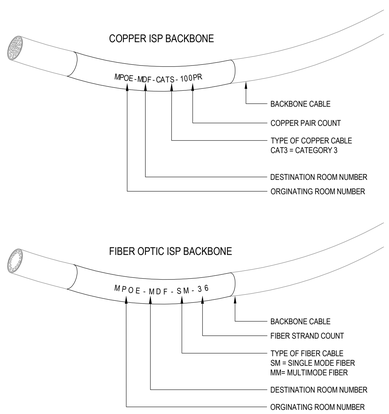

NOTES:
1. ROOM NUMBER SHOWN HERE AS EXAMPLE. REFER TO ARCHITECTURAL PLANS FOR PROJECT ROOM NUMBERS.
2. MODULAR CONNECTOR SHOWN FOR CLARITY ONLY, AND MAY NOT REFLECT ACTUAL CONNECTOR SPECIFIED FOR THIS PROJECT.

5 LABELING - CABLE FORMAT (BOTH ENDS)

SCALE: NONE

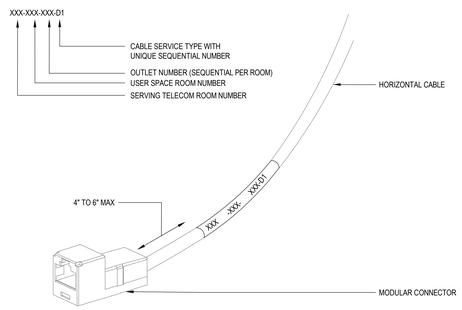

NOTES:
1. ROOM NUMBER SHOWN HERE AS EXAMPLE. REFER TO ARCHITECTURAL PLANS FOR PROJECT ROOM NUMBERS.
2. MODULAR CONNECTOR SHOWN FOR CLARITY ONLY, AND MAY NOT REFLECT ACTUAL CONNECTOR SPECIFIED FOR THIS PROJECT.

4 LABELING - HORIZONTAL CABLE

SCALE: NONE

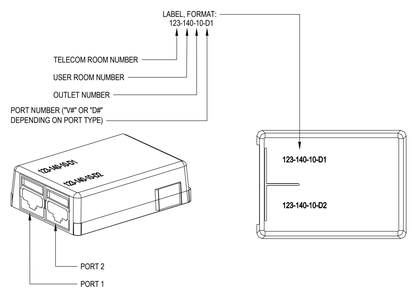

NOTES:
1. NUMBERS SHOWN IN DETAIL ARE AN EXAMPLE AND MAY NOT REFLECT ACTUAL ROOM NUMBERS.

3 LABELING - 2-PORT OUTLET BOX

SCALE: NONE

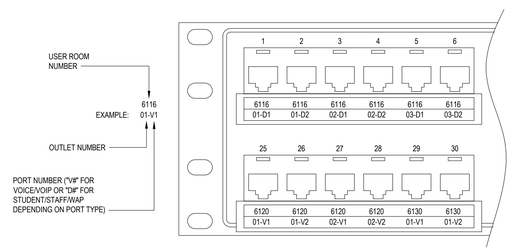

NOTES:
1. ROOM NUMBER SHOWN HERE AS EXAMPLE. REFER TO ARCHITECTURAL PLANS FOR PROJECT ROOM NUMBERS.
2. PATCH PANEL SHOWN MAY NOT REFLECT ACTUAL PRODUCT SPECIFIED FOR THIS PROJECT.
3. GROUP TERMINATIONS IN PATCH PANEL BY COLOR/USE: BLUE - STAFF, YELLOW - STUDENT, WHITE - VOIP, GREEN - WAP. WITHIN COLOR/USE GROUPINGS ORGANIZE TERMINATIONS BY ROOM NUMBER, OUTLET NUMBER, AND PORT NUMBER.

2 LABELING - PATCH PANEL

SCALE: NONE

tBP
architecture
planning
interiors

tBP/Architecture
1777 Oakland Boulevard, Suite 320
Walnut Creek, CA 94596
ph: 925.246.6419

architect

TEECOM
1333 Broadway, Suite 601
Oakland, CA 94612
510-337-2800
510-337-2804 fax
www.teecom.com

consultant

IDENTIFICATION STAMP
DIV. OF THE STATE ARCHITECT
OFFICE OF REGULATION SERVICES
APPL #01-
FILE NO. 7-C1
AC FLS SS
DATE

DIVISION OF THE STATE ARCHITECT
1515 CLAY STREET
OAKLAND, CA94612
ph:(510) 622-3101

agency

C-4008 APPLIED ARTS & ADMIN RENOVATION

2600 MISSION BELL DRIVE, SAN PABLO, CA 94806

CONTRA COSTA COMMUNITY COLLEGE DISTRICT

500 COURT STREET MARTINEZ, CA 94553

owner

tBP project number: 20865.00
file name:
drawn by: checked by:
date: July 06, 2018

rev:	date:	description:
	4/30/2019	RECORD SET

THIS DRAWING AND THE DESIGNS, DEPICTIONS, IDEAS AND OTHER INFORMATION CONTAINED HEREIN CONSTITUTE UNPUBLISHED WORK OF tBP/ARCHITECTURE AND SHALL REMAIN PROPERTY OF tBP/ARCHITECTURE IN PERPETUITY. NO PART THEREOF SHALL BE REPRODUCED, DISCLOSED, DISTRIBUTED, SOLD, PUBLISHED OR OTHERWISE USED IN ANY WAY WITHOUT THE ADVANCED EXPRESS WRITTEN CONSENT OF tBP/ARCHITECTURE.

drawing title: LABELING DETAILS

drawing no.: T5.02

drawing of

Record Dwgs

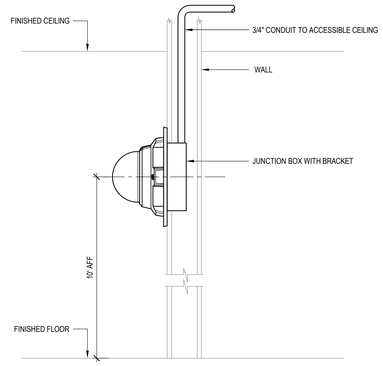

APPLIES TO: B

3 INTERIOR IP CAMERA (WALL MOUNT)

SCALE: NONE

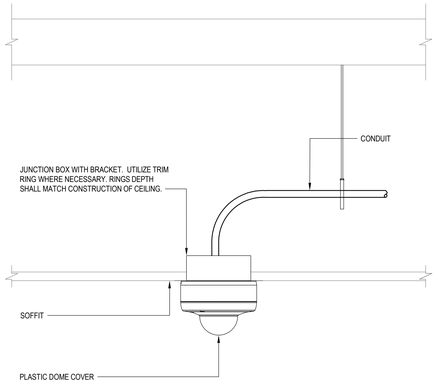

APPLIES TO: A

2 FIXED CAMERA - NON-ACCESSIBLE CEILING MOUNT

SCALE: NONE

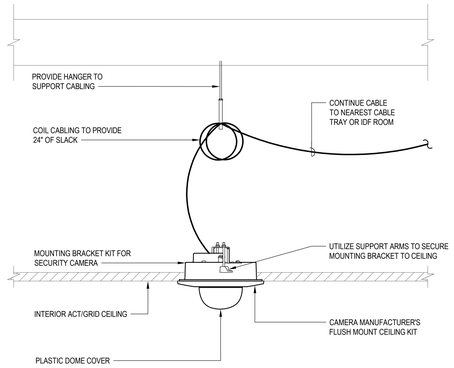

APPLIES TO: A

1 INTERIOR IP CAMERA (ACCESSIBLE CEILING)

SCALE: NONE

tBP
architecture
planning
interiors

tBP/Architecture
1777 Oakland Boulevard, Suite 320
Walnut Creek, CA 94596
ph: 925.246.6419

architect

TEECOM
1333 Broadway, Suite 601
Oakland, CA 94612
510-337-2800
510-337-2804 fax
www.teecom.com

consultant

IDENTIFICATION STAMP
DIV. OF THE STATE ARCHITECT
OFFICE OF REGULATION SERVICES
APPL # 01-
FILE NO. 7-C1
AC ____ KS ____ SS ____
DATE ____

DIVISION OF THE STATE ARCHITECT
1515 CLAY STREET
OAKLAND, CA94612
ph:(510) 622-3101

agency

C-4008 APPLIED ARTS & ADMIN RENOVATION

2600 MISSION BELL DRIVE, SAN PABLO, CA 94806

CONTRA COSTA COMMUNITY COLLEGE DISTRICT

500 COURT STREET MARTINEZ, CA 94553

owner

tBP project number: 20865.00
file name:
drawn by: checked by:
date: July 06, 2018

rev:	date:	description:
	4/30/2019	RECORD SET

THIS DRAWING AND THE DESIGNS, DEPICTIONS, IDEAS AND OTHER INFORMATION CONTAINED HEREIN CONSTITUTE UNPUBLISHED WORK OF tBP/ARCHITECTURE AND SHALL REMAIN PROPERTY OF tBP/ARCHITECTURE IN PERPETUITY. NO PART THEREOF SHALL BE REPRODUCED, DISCLOSED, DISTRIBUTED, SOLD, PUBLISHED OR OTHERWISE USED IN ANY WAY WITHOUT THE ADVANCED EXPRESS WRITTEN CONSENT OF tBP/ARCHITECTURE.

drawing title: INSTALLATION DETAILS - SECURITY CAMERAS

drawing no.: T5.21

drawing of

Record Dwgs

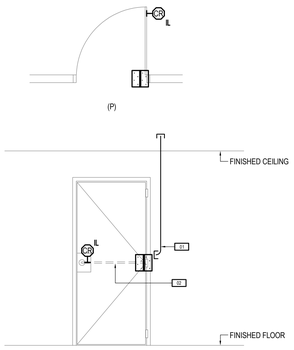

THEORY OF OPERATION:

- NORMAL DOOR STATE IS CLOSED AT ALL TIMES.
- DOOR IS LOCKED ON THE NON-PROTECTED SIDE AND UNLOCKED ON THE PROTECTED SIDE.
- TO OPEN DOOR FROM NON-PROTECTED SIDE, CARD MUST BE PRESENTED TO UNLOCK DOOR.
- REQUEST TO EXIT SWITCH BUILT INTO DOOR HARDWARE BYPASSES ALARM ONLY ON EXIT.
- INSIDE PUSH BUTTON (IPB) PROVIDES EMERGENCY CLASSROOM LOCK DOWN, PUSH BUTTON TO TURN OFF CARD READER AND LOCK DOOR.

3 SINGLE DOOR W/ INTEGRATED LOCK

SCALE: NONE

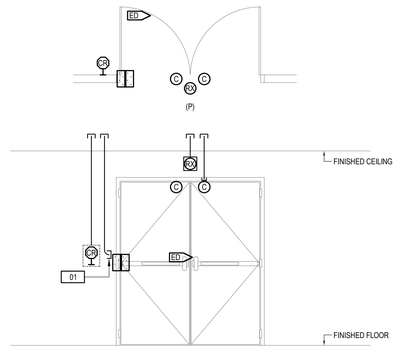

THEORY OF OPERATION:

- NORMAL DOOR STATE IS CLOSED AT ALL TIMES.
- DOOR IS LOCKED ON THE NON-PROTECTED SIDE AND UNLOCKED ON THE PROTECTED SIDE.
- TO OPEN DOOR FROM NON-PROTECTED SIDE, CARD MUST BE PRESENTED TO UNLOCK DOOR.
- REQUEST TO EXIT MOTION DETECTOR SHUNTS DOOR CONTACT ALARM THUS ALLOWING VALID EXIT.

2 CARD READER PAIR, W/ EXIT DEVICE

SCALE: NONE

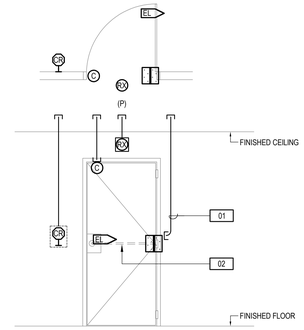

THEORY OF OPERATION:

- NORMAL DOOR STATE IS CLOSED AT ALL TIMES.
- DOOR IS LOCKED ON THE NON-PROTECTED SIDE AND UNLOCKED ON THE PROTECTED SIDE.
- TO OPEN DOOR FROM NON-PROTECTED SIDE, CARD MUST BE PRESENTED TO UNLOCK DOOR.
- REQUEST TO EXIT MOTION DETECTOR BYPASSES ALARM ONLY ON EXIT.

1 CARD READER SINGLE, W/ ELECTRIC LOCK

SCALE: NONE

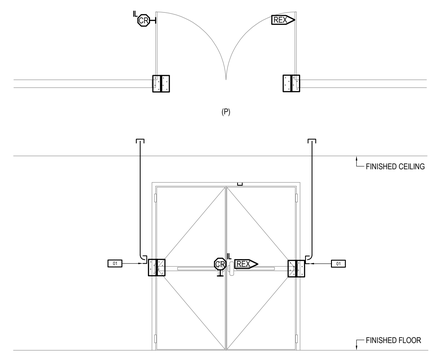

THEORY OF OPERATION:

- NORMAL DOOR STATE IS CLOSED AT ALL TIMES.
- DOOR IS LOCKED ON THE NON-PROTECTED SIDE AND UNLOCKED ON THE PROTECTED SIDE.
- TO OPEN DOOR FROM NON-PROTECTED SIDE, CARD MUST BE PRESENTED TO UNLOCK DOOR.
- REQUEST TO EXIT SWITCH BUILT INTO DOOR HARDWARE BYPASSES ALARM ONLY ON EXIT.
- INSIDE PUSH BUTTON (IPB) PROVIDES EMERGENCY CLASSROOM LOCK DOWN, PUSH BUTTON TO TURN OFF CARD READER AND LOCK DOOR.

4 DOUBLE DOOR, W/ INTEGRATED LOCK

SCALE: NONE

SHEET NOTES

1. THE DIAGRAMS ON THIS SHEET ARE TYPICAL AND SHOWN AS A GUIDELINE FOR ROUGH-IN AND CONFIGURATION. INDIVIDUAL DOORS VARY. ADJUST THE INSTALLATION TO SUIT EACH DOOR INSTANCE, INCLUDING CONDUIT CONFIGURATION AND QUANTITY, DEVICE LOCATIONS, ETC. ALSO, REFER TO ARCHITECTURAL DRAWINGS FOR EXACT INSTALLATION DIMENSIONS.
2. REFER TO THE DOOR SCHEDULE FOR DOOR COMPONENTS.
3. SUBMIT INDIVIDUAL DOOR DETAILS TO MATCH PROJECT REQUIREMENTS.
4. IN DOOR ELEVATIONS, VIEWS ARE FROM THE PROTECTED SIDE, UON. IN DOOR PLANS, "(P)" INDICATES THE PROTECTED SIDE.
7. DASHED SYMBOLS, JUNCTION BOXES, AND LINES INDICATE DEVICES ON THE OPPOSITE SIDE OF THE WALL.
8. PROVIDE 4" SQUARE X 2 1/8" D (MIN) JUNCTION BOXES, UON.
9. PROVIDE ONE 1" EMT CONDUIT BETWEEN JUNCTION BOXES, UON. FMC ("FLEX") CONDUIT WILL NOT BE ACCEPTED.
10. INSTALL JUNCTION BOXES 6" ON CENTER FROM THE LATCH SIDE OF THE DOOR, UON.
11. INSTALL JUNCTION BOXES AND POWER SUPPLIES ABOVE ACCESSIBLE CEILINGS ON THE PROTECTED SIDE OF DOORS. WHERE THEY OCCUR BELOW CEILINGS, INSTALL JUNCTION BOXES FLUSH TO WALL AND INSTALL CONDUIT CONCEALED WITHIN THE WALL.
12. TERMINATE SECURITY CABLE TO TRANSFER HINGE AND LOCK BODY. COORDINATE INSTALLATION WITH THE DOOR HARDWARE PROVIDER AS THE LOCKS GET INSTALLED.
13. AT DOORS THAT ARE FAIL SAFE WITHOUT A LOCAL POWER SUPPLY, FIRE ALARM SYSTEM ACTIVATION SHALL RELEASE THE LOCK VIA A LOCAL RELAY POWERED FROM A CENTRAL POWER SUPPLY. AT DOORS THAT ARE FAIL SAFE WITH A LOCAL POWER SUPPLY, FIRE ALARM SYSTEM ACTIVATION SHALL RELEASE THE LOCK VIA A RELAY. THE FIRE ALARM CONTRACTOR SHALL PROVIDE THE FIRE ALARM INTERFACE RELAY AND SIGNAL CONNECTION FROM THE FIRE ALARM SYSTEM TO THE RELAY. COORDINATE WHICH DOORS ARE FAIL SAFE WITH THE ARCHITECT.
14. DOORS AND FRAMES SHALL BE FACTORY-FABRICATED FOR SECURITY DEVICES INCLUDING LOCK WIRE PATHWAY, 1" DOOR CONTACTS, AND ACCESS HOLE BEHIND ELECTRIC TRANSFER HINGE. COORDINATE LOCATIONS AND SIZES WITH DEVICE MANUFACTURER'S INSTALLATION TEMPLATES.

NUMBERED NOTES

01	STUB PATHWAY TO ABOVE ELECTRIC THROUGH-WIRE HINGE FOR WIRE TO ELECTRIC LOCK.
02	FACTORY-DRILLED BORE (~3/8") THROUGH DOOR FOR LOCK WIRE.

architecture
planning
interiors

tBP/Architecture
1777 Oakland Boulevard, Suite 320
Walnut Creek, CA 94596
ph: 925.256.6419

architect

TEECOM
1333 Broadway, Suite 601
Oakland, CA 94612
510-337-2800
510-337-2804 fax
www.teecom.com

consultant

IDENTIFICATION STAMP
DIV. OF THE STATE ARCHITECT
OFFICE OF REGULATION SERVICES
APPL # 01-
FILE NO. 7-C1
AC ___ KS ___ SS ___
DATE ___

DIVISION OF THE STATE ARCHITECT
1515 CLAY STREET
OAKLAND, CA94612
ph:(510) 622-3101

agency

C-4008 APPLIED ARTS & ADMIN RENOVATION

2600 MISSION BELL DRIVE, SAN PABLO, CA 94806

CONTRA COSTA COMMUNITY COLLEGE DISTRICT
500 COURT STREET MARTINEZ, CA 94553

owner

tBP project number: 20865.00
file name:
drawn by: checked by:
date: July 06, 2018

rev:	date:	description:
	4/30/2019	RECORD SET

THIS DRAWING AND THE DESIGNS, DEPICTIONS, IDEAS AND OTHER INFORMATION CONTAINED HEREIN CONSTITUTE UNPUBLISHED WORK OF tBP/ARCHITECTURE AND SHALL REMAIN PROPERTY OF tBP/ARCHITECTURE IN PERPETUITY. NO PART THEREOF SHALL BE REPRODUCED, DISCLOSED, DISTRIBUTED, SOLD, PUBLISHED OR OTHERWISE USED IN ANY WAY WITHOUT THE ADVANCED EXPRESS WRITTEN CONSENT OF tBP/ARCHITECTURE.

drawing title: INSTALLATION DETAILS - SECURITY DOORS

drawing no.: T5.22

drawing of

Record Dwgs

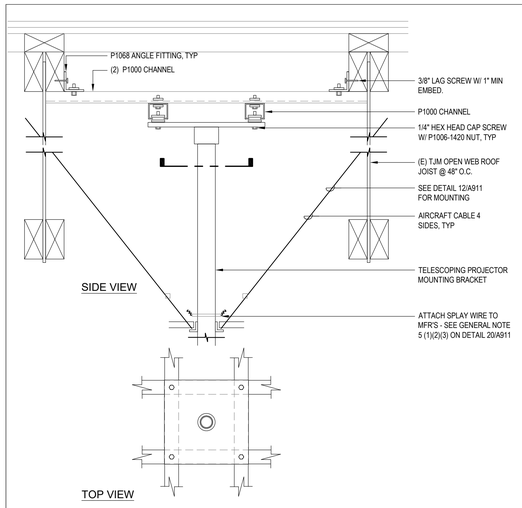

4 PROJECTOR - STRUCTURAL MOUNTING

SCALE: NONE

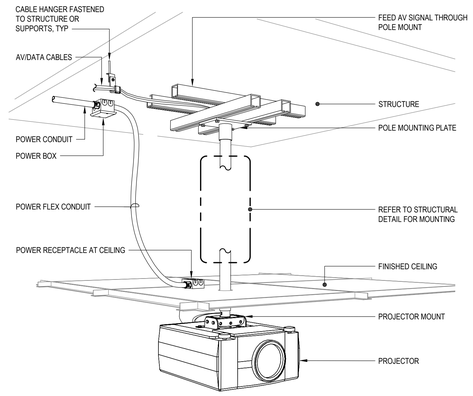

3 PROJECTOR - CEILING MOUNT

SCALE: NONE

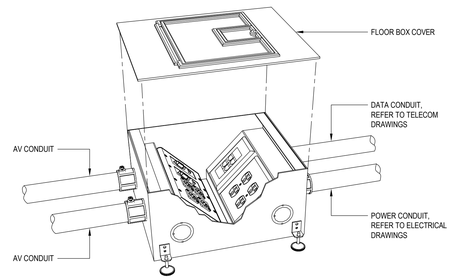

2 FLOOR BOX

SCALE: NONE

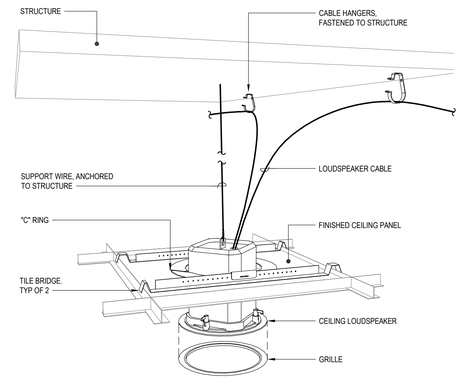

1 LOUDSPEAKER ACCESSIBLE CEILING

SCALE: NONE

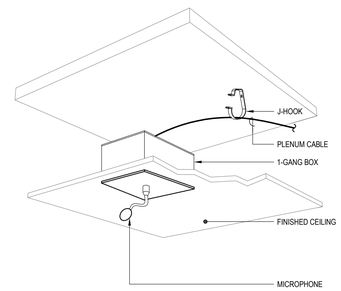

6 MICROPHONE CEILNG MOUNT

SCALE: NONE

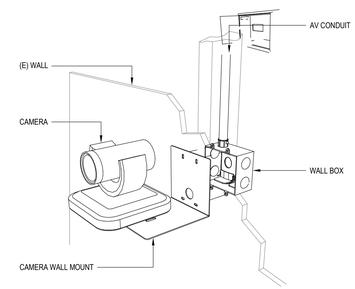

5 PTZ CAMERA - WALL MOUNT

SCALE: NONE

tBP
architecture
planning
interiors

tBP/Architecture
1777 Oakland Boulevard, Suite 320
Walnut Creek, CA 94596
ph: 925.246.6419

architect

TEECOM
1333 Broadway, Suite 601
Oakland, CA 94612
510-337-2604
510-337-2606 fax
www.teecom.com

consultant

IDENTIFICATION STAMP
DIV OF THE STATE ARCHITECT
OFFICE OF REGULATION SERVICES
APPL #01-
FILE NO. 7-C1
AC SS
FLS
DATE

DIVISION OF THE STATE ARCHITECT
1515 CLAY STREET
OAKLAND, CA94612
ph:(510) 622-3101

agency

C-4008 APPLIED ARTS & ADMIN RENOVATION

2600 MISSION BELL DRIVE, SAN PABLO, CA 94806

CONTRA COSTA COMMUNITY COLLEGE DISTRICT
500 COURT STREET MARTINEZ, CA 94553

owner

tBP project number: 20865.00
file name:
drawn by: checked by:
date: July 06, 2018

rev:	date:	description:
	4/30/2019	RECORD SET

THIS DRAWING AND THE DESIGNS, DEPICTIONS, IDEAS AND OTHER INFORMATION CONTAINED HEREIN CONSTITUTE UNPUBLISHED WORK OF tBP/ARCHITECTURE AND SHALL REMAIN PROPERTY OF tBP/ARCHITECTURE IN PERPETUITY. NO PART THEREOF SHALL BE REPRODUCED, DISCLOSED, DISTRIBUTED, SOLD, PUBLISHED OR OTHERWISE USED IN ANY WAY WITHOUT THE ADVANCED EXPRESS WRITTEN CONSENT OF tBP/ARCHITECTURE.

drawing title: INSTALLATION DETAILS - AUDIOVISUAL

drawing no.: T5.31

drawing of

Record Dwgs