GENERAL NOTES

1. ALL WALL BENCHTOPS SHALL BE 30" DEEP INCLUDING BACK SPLASH (UNLESS OTHERWISE NOTED).
2. ALL ISLAND BENCHTOPS SHALL BE 60" DEEP (UNLESS OTHERWISE NOTED). RFI-52
3. ALL BENCHES AND TABLES SHALL BE 36" HIGH (UNLESS OTHERWISE NOTED).
4. ALL BENCH/TABLE TOPS TO BE 1" THICK EPOXY RESIN (UNLESS OTHERWISE NOTED).
5. ALL BACK AND SIDE SPLASHES AND PIPE DROP CURBS TO BE 1" THICK AND 4" HIGH.
6. PROVIDE SIDE SPLASH AT ALL BENCH TOPS AND SCULLERY SINKS AGAINST FUME HOODS AND/OR ADJACENT WALLS.
7. OVERALL LENGTH OF BENCHTOPS SHALL BE DETERMINED BY CASEWORK SIZES AND DIMENSIONS AS INDICATED ON PLANS. TOPS SHALL OVERHANG 1/2" AT EACH END AND 1" FROM FRONT OF BASE CABINETS AND TABLES. WHEN OVERALL DEMENSIONS ARE GIVEN, 1/2" OVERHANG IS NOT INCLUDED.
8. ALL CASEWORK, FUME HOODS AND ANY OTHER FURNISHINGS WITH EXPOSED-TO-VIEW BACKS AND SIDES SHALL BE FINISHED.
9. INSTALL CLOSURE PANELS BETWEEN BACK OF CABINETS OR HOODS AND WALLS AT EXPOSED ENDS AND BETWEEN BASE CABINETS AND/OR HOODS THAT ARE SET BACK TO BACK.
10. ALL PENETRATIONS THROUGH BENCHTOP SHALL BE SEALED WITH SEALANT.
11. BACKS OF COUNTERTOPS AND SPLASHES AGAINST WALLS SHALL BE SEALED TO THE WALL WITH SEALANT.
12. CONTRACTOR SHALL FIELD VERIFY ALL DIMENSIONS PRIOR TO FABRICATION.
13. OWNER'S REPRESENTATIVE WILL SELECT COLORS FOR ALL COMPONENTS OF PROJECT INDICATED ON THESE DRAWINGS. COLOR SELECTION WILL BE FROM THE CASEWORK MANUFACTURER'S STANDARD COLOR LINE.
14. FREE STANDING SHELVING AND CASEWORK LESS THAN 18" DEEP SHALL BE SECURED TO PREVENT TIPPING. SUBMIT SHOP DRAWINGS OF ATTACHMENT PRIOR TO INSTALLATION.
15. SAFETY SHOWER/EYEWASH UNITS SHALL COMPLY WITH ADA & ANSI STANDARDS FOR USABILITY BY THE PHYSICALLY DISABLED. SAFETY SHOWER/EYEWASH UNITS SHALL BE FURNISHED UNDER DIVISION 11 FOR INSTALLATION UNDER DIVISION 15.
16. FOR LABORATORY SERVICE FITTING TYPES, LOCATIONS AND ORDER, SEE LABORATORY FURNISHINGS PLANS. THESE FITTINGS SHALL BE PROVIDED UNDER DIVISION 11, FOR INSTALLATION UNDER DIVISION 15. RFI 573 DUCT EXHAUST
17. WHERE NO FUME HOOD OCCURS ADJACENT TO CORROSIVE STORAGE CABINETS, ROUTE VENT PIPE (IN PIPE CHASE) UP NEAREST PIPE DROP ENCLOSURE TO EXHAUST DUCT SYSTEM FOR CONNECTION BY DIVISION 15.
18. WHERE FUME HOOD OCCURS ADJACENT TO VACUUM PUMP OR CORROSIVE STORAGE CABINETS, ROUTE VENT PIPE (IN PIPE CHASE) TO FUME HOOD AND EXTEND 4" ABOVE FUME HOOD WORK SURFACE BEHIND BAFFLE.
19. ALL SNORKEL EXHAUST SHOWN ON THESE DRAWINGS, INCLUDING FLEXIBLE DUCT HOSE, SHALL BE PROVIDED UNDER DIVISION 11. DIVISION 15 SHALL PROVIDE DUCTWORK TO 6" ~~BELOW CEILING~~ OR 9'-0" ABOVE FINISHED FLOOR AT OPEN CEILINGS AND MAKE FINAL CONNECTION TO SNORKEL. (NOT USED) LFR-1
20. LOCATION OF EQUIPMENT, SUCH AS FUME HOODS, OVERHEAD SERVICE CARRIERS, BRACES OR ANY OTHER ITEMS THAT MAY INTERFERE WITH LIGHTING, STRUCTURAL OR MECHANICAL SYSTEMS, SHALL BE CAREFULLY COORDINATED. NOTIFY OWNER'S REPRESENTATIVE OF DISCREPANCIES PRIOR TO PROCEEDING WITH WORK.
21. UNLESS OTHERWISE NOTED, ALL MISCELLANEOUS CHANNELS, BRACKETS AND FITTINGS INDICATED ON ALL LABORATORY FURNISHINGS DRAWINGS SHALL BE SUPPLIED, INSTALLED AND PAINTED UNDER DIVISION 11.
22. CONTRACTOR SHALL EXAMINE ALL LABORATORY FURNISHINGS PLANS AND COORDINATE WITH REFLECTED CEILING PLANS FOR PROPER CEILING HEIGHTS & PIPE DROP ENCLOSURE HEIGHTS AND LOCATIONS.
23. OVERHEAD SERVICE CARRIERS, HEAVY DUTY UNISTRUT AND OTHER STRUCTURALLY ANCHORED AND SUSPENDED DEVICES WHICH REQUIRE COORDINATION WITH OTHER TRADES SHALL BE THE RESPONSIBILITY OF THIS DIVISION (UNLESS OTHERWISE NOTED). ADDITIONAL FRAMING MAY BE REQUIRED TO ACCOMMODATE ANCHORAGE AROUND DUCTWORK OR OTHER OBSTRUCTIONS.
24. ALL BULLETIN BOARDS, MARKER BOARDS, CHALKBOARDS, PROJECTION SCREENS, COAT RACKS AND FIRE EXTINGUISHERS ARE INDICATED ON THE "LF" DRAWINGS FOR COORDINATION PURPOSES ONLY.
25. ALL WALL MOUNTED RACEWAYS SHALL BE MOUNTED 43" A.F.F. TO THE BOTTOM OF THE RACEWAY U.O.N.

INTERIOR DOOR CLEARANCES (ADA COMPLIANT)

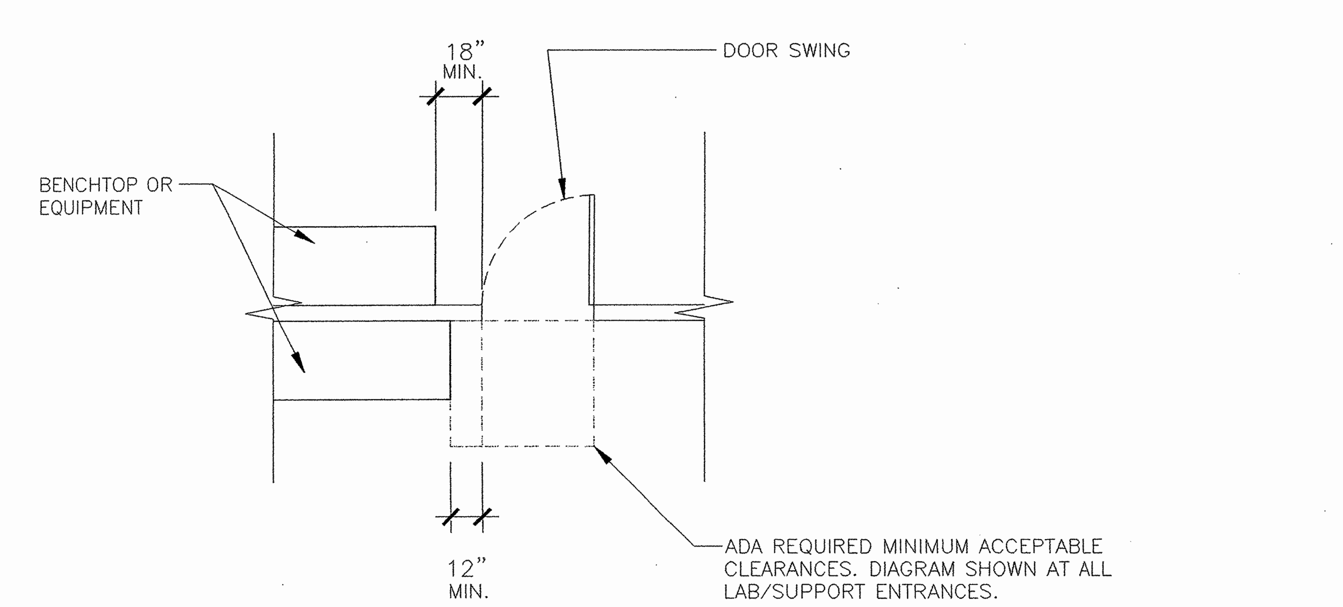

LABORATORY SYMBOLS LEGEND

	SYMBOL LEGEND	DESCRIPTION	DETAIL
1		PIPE DROP ENCLOSURE	1-5 / LF4.02
2		DRYING RACK	3 / LF4.03
3		ADJUSTABLE WALL SHELVES (2 TIER U.O.N.)	9 / LF4.01
4		ADJUSTABLE ISLAND/PENINSULA BENCH SHELVING (2 TIER U.O.N.)	6 / LF4.01
5		CYLINDER RESTRAINT ASSEMBLY	2 / LF4.03
6		MARINE EDGE	REFER TO SPECS
7		OPEN INDUSTRIAL METAL SHELF UNITS	REFER TO SPECS
8		18" ADJUSTABLE WALL SHELVING ON UNISTRUT	6 / LF4.02
9	NOT USED	NOT USED	
10		SAFETY STATION WITH RECESSED PULL-DOWN EYEWASH	3 / LF5.00
11		MOVABLE TABLE	7-9 / LF4.02
12		WIRE SHELVING UNIT	1 / LF4.03
13		RECESSED MIXING UNIT, HOSE STATION	REFER TO SPECS
14	NOT USED	NOT USED (SKETCH LFR-2)	
15	NOT USED	NOT USED	
16		WATER PURIFIER - OWNER FURNISHED, OWNER INSTALLED	
17		BOOK/BACK PACK STORAGE - REFER TO ELEVATION 15/LF3.00	
18		LATTICE ROD ASSEMBLY	4 / LF4.00
19		MULTI-MEDIA PROJECTOR (CEILING MOUNT) & A/V SCREEN- SHOWN FOR COORDINATION ONLY - REFER TO ARCHITECTURAL DRAWINGS	
20		MARKER BOARD OR CHALKBOARD (SEE ARCHITECTURAL DOCUMENTS, SHOWN FOR COORDINATION ONLY)	
21		*TACK BOARD (SEE ARCHITECTURAL DOCUMENTS, SHOWN FOR COORDINATION ONLY)* FLAME SPREAD CLASS III INDEX 76-200	
22		DRAIN GROOVES	REFER TO SPECS
23		EXAM LIGHT	REFER TO SPECS
	WCxx	WALL CABINET - SEE CASEWORK MENU	
	TAxx	TALL STORAGE CABINET - SEE CASEWORK MENU	
		LEG POST UNDER BENCH/TABLE TOP	
	CFH	CHEMICAL FUME HOOD - SEE EXHAUST SCHEDULE	1,2 / LF4.00
24		OWNER FURNISHED, OWNER INSTALLED EQUIPMENT (EQUIPMENT UNKNOWN AT THIS TIME, HOWEVER TYPICALLY REFRIGERATORS OR FREEZERS.	
		EPOXY RESIN SINK - SEE SINK SCHEDULE	
		STAINLESS STEEL SINK - SEE SINK SCHEDULE	
		CUP SINK - SEE SINK SCHEDULE	
	FD	FLOOR DRAIN (SHOWN FOR COORDINATION ONLY)	
	FS	FLOOR SINK (SHOWN FOR COORDINATION ONLY)	

S. J. AMOROSO
Request For Information/Clarification

DSA FILE NO. 7-C1
DSA APPL. No. 01-106226

To: tBP/Architecture, 1000 Burnett Ave, Suite 140, Concord, CA 94520
Attn: Celia Chiang, Tom Beckett
Fax: 925-246-6495
Subj.: Lab casework key schedule
Reference (dwg, spec.):
Reply Requested By: 10/16/06

Project: LOS MEDANOS COLLEGE SCIENCE BUILDING Contra Costa Community College District
tBP p/n: 20247.00
RFI No: 374
Subcontractor RFI: Dow 4

INFORMATION REQUESTED: Date: 10/9/06

Please provide direction on how the laboratory casework cabinet locks should be keyed.

Should they be keyed alike with in a room but different from every other room? Or should each lock be keyed differently?

There will be a master key for the entire project.

Please advise.

SUGGESTED SOLUTION:
Cost Impact: ☐ Schedule Impact: ☐ days By: Mark Delgado

RESPONSE: DATE:

- ALL LOCKS @ SECOND FLOOR (PHYSICAL SCIENCES) SHALL BE KEYED ALIKE - WITH A MASTER KEY SPECIFIC TO THIS FLOOR.
- ALL LOCKS @ FIRST FLOOR (NATURAL SCIENCES) SHALL BE KEYED ALIKE - WITH A MASTER KEY SPECIFIC TO THIS FLOOR.

10-17-06

RFI # 000
Page 1

TYPICAL ABBREVIATIONS

ADA	AMERICAN DISABILITIES ACT	A	COMPRESSED LAB AIR (100 PSIG)
A.F.F.	ABOVE FINISHED FLOOR	Ar	ARGON
CFM	CUBIC FEET/MINUTE	CA	COMPRESSED LAB AIR (100 PSIG)
DIA	DIAMETER	CHWS	CHILLED WATER SUPPLY
DIV.	DIVISION	CHWR	CHILLED WATER RETURN
EQUIP	EQUIPMENT	CO2	CARBON DIOXIDE
FZR.	FREEZER	CW	POTABLE COLD WATER
GA.	GAUGE	DI	DEIONIZED WATER
H.D.	HEAVY DUTY	DH	DRENCH HOSE
MAX.	MAXIMUM	EW	EYEWASH
MIN.	MINIMUM	He	HELIUM
MTD.	MOUNTED	He(R)	HELIUM RETURN
N.T.S.	NOT TO SCALE	HW	POTABLE HOT WATER
O.C.	ON CENTER	ICW	INDUSTRIAL COLD WATER
OFOI	OWNER FURNISHED, OWNER INSTALLED	IHW	INDUSTRIAL HOT WATER
OFCI	OWNER FURNISHED, CONTRACTOR INSTALLED	LA	LABORATORY AIR (15 PSIG)
O.H.	OVERHEAD	LG	LABORATORY GAS
OHSC	OVERHEAD SERVICE CARRIER	LV	LABORATORY VACUUM
REF.	REFRIGERATOR	N2	NITROGEN GAS
ST.STL.	STAINLESS STEEL	PCWS	PROCESS COOLING WATER SUPPLY
TEMP	TEMPERATURE	PCWR	PROCESS COOLING WATER RETURN
TYP.	TYPICAL	PW	PURIFIED WATER
U/C	UNDER COUNTER	RO	REVERSE OSMOSIS WATER
U.O.N.	UNLESS OTHERWISE NOTED	SG	SPECIAL GAS
WP	WEATHERPROOF	SS	SAFETY SHOWER

LABORATORY BENCHTOP MATERIAL SCHEDULE

E EPOXY RESIN BENCHTOP
S STAINLESS STEEL BENCHTOP

+30", +34", +36" INDICATES BENCHTOP HEIGHT ABOVE FINISH FLOOR

DETAIL SYMBOLS LEGEND

DETAIL NUMBER / SHEET NUMBER
SECTION NUMBER / SHEET NUMBER
ELEVATION NUMBER / SHEET NUMBER

LABORATORY SINK SCHEDULE

SINK NUMBER	MATERIAL	WIDTH x FRONT TO BACK x DEPTH	REMARKS
SK1	EPOXY RESIN	21" x 17" x 10"	DROP IN
SK2	EPOXY RESIN	18" x 15" x 5"	DROP IN - REQUIRES ADA FITTINGS
SK3	EPOXY RESIN	28" x 15" x 12"	DROP IN
SK4	EPOXY RESIN	14" x 12" x 10"	DROP IN
SK5	STAINLESS STEEL	22" x 16" x 10"	INTEGRAL WITH TOP
SK6	STAINLESS STEEL	22" x 16" x 5"	INTEGRAL WITH TOP & REQUIRES ADA FITTINGS
SK7	EPOXY RESIN	18" x 15" x 10"	DROP IN
SK8	EPOXY RESIN	28" x 15" x 12"	DROP IN - REQUIRES ADA FITTINGS - SIDE REACH ADA COMPLIANT
SK9 (SEE LFR-4)	EPOXY RESIN	40" x 18" x 18"	UNDER MOUNT SEE DETAIL 4/LF4.04
CS1	EPOXY RESIN	3" x 6"	DROP IN - OVAL CUPSINK
CS2	EPOXY RESIN	6" x 9"	DROP IN - OVAL CUPSINK
CS3	EPOXY RESIN	6" x 14"	DROP IN - RECTANGULAR CUPSINK

SEE DETAIL 1,2/LF5.00 FOR FIXTURE SPACING

LABORATORY SERVICE FITTING SCHEDULE

ABBREV.	NOTES	MOUNTING	DETAIL
ICW	COLD WATER FITTING	DECK	2 / LF5.01
		HOOD	5 / LF5.00
		DECK (ADA)	9 / LF5.01
IHWICW	HOT WATER/COLD WATER MIXING VALVE	DECK	8 / LF5.00
		DECK (ADA)	9 / LF5.00
		DECK (SPRAY)	8 / LF5.01
DI	PURE WATER FITTING (WALL 7/LF5.01, LFR-3)	DECK	3 / LF5.01
DH	DRENCH HOSE - SINGLE HEAD	DECK	4 / LF5.00
LA, LG, LV & BA	LABORATORY AIR, LABORATORY VACUUM, LABORATORY GAS, BLOWER AIR FITTING	DECK	1 / LF5.01
		HOOD	6,7 / LF5.00
		HOOD (ADA)	7 / LF5.00

tBP architecture planning interiors management
LICENSED ARCHITECT RICHARD A. MANGUM, AIA. NO. C-8685 REN. 12-31-05 STATE OF CALIFORNIA
tBP/Architecture
1000 Burnett Avenue, Suite 140
Concord, CA 94520
p: 925.246.6419 f: 925.246.6495

LICENSED ARCHITECT SEAN E. TOWNE No. C 14749 REN. 7-05 STATE OF CALIFORNIA
RFD RESEARCH FACILITIES DESIGN
3965 Fifth Avenue, Suite 300
San Diego, California 92103
TEL 619 · 297 · 0159
FAX 619 · 294 · 4901

IDENTIFICATION STAMP DIV. OF THE STATE ARCHITECT OFFICE OF REGULATION SERVICES
APPL · 01-106226
AC FLS SS
DATE 1-18-05

name
address
city, state, zip
ph: fx:

SCIENCE BUILDING LOS MEDANOS COLLEGE

Contra Costa Community College District

tBP project number : 20247.00
file name: NOTES & LEGEND
drawn by: DI checked by: DI
date: NOVEMBER 15, 2004
key date description

drawing title:
LABORATORY FURNISHINGS NOTES & LEGEND
LMC SCIENCE 313-023-112.01-0-00.00
drawing no.: LF1-00

CONTROLLED ENVIRONMENT ROOM SCHEDULE

ROOM NUMBER	OUTSIDE DIMENSIONS LxWxH	TEMPERATURE	RANGE	RELATIVE HUMIDITY	EXHAUST AIR	ELECTRICAL REQUIREMENTS		CONDENSING UNIT	
						120/208 V,	3 PHASE		
						4 WIRE	3 WIRE	LOCATION	APPROX. DIMENSIONS
						CONTROL PANEL	REMOTE COND. UNIT		
	FEET	°C	°C	% RH	CFM	AMP	AMP		FEET
??	9x21.5x9.5	4 TO 9	± 1	NOT CONTROLLED	50	30	30	ROOF	3.5x2.5x3H

LFR-4

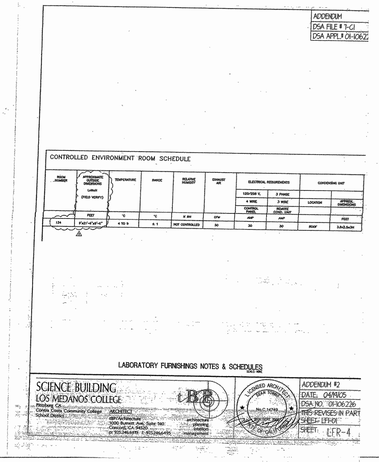

EQUIPMENT EXHAUST SCHEDULE

RFD HOOD TYPE	HOOD DESCRIPTION	VIEWING SASH HEIGHT	FACE VELOCITY	CV AIR FLOW		VAV AIR FLOW			WATER STATIC PRESSURE AT HOOD OUTLET	HOOD COLLAR SIZE	HOOD CONNECTION DIAMETER	REMARKS	DETAIL
				DESIGN SASH HEIGHT	FLOW	DESIGN SASH HEIGHT	MAX FLOW	MIN FLOW					
		(INCH)	(FPM)	(INCH)	(CFM)	(INCH)	(CFM)	(CFM)	INCH OF WATER	INCH	INCH		
4' CFH	4' CHEMICAL FUME HOOD VERTICAL SASH	28	100	18	500	18	500	200	0.50	6" X 18"	10"		2 / LF4.00
6' CFH	6' CHEMICAL FUME HOOD VERTICAL SASH	28	100	18	800	18	800	300	0.50	6" X 24"	12"		2 / LF4.00
6' ACFH	6' ADA ACCESSIBLE HOOD VERTICAL SASH	28	100	18	800	18	800	300	0.50	6" X 24"	12"	WORK SURFACE AT 34" A.F.F.	1 / LF4.00

EXHAUSTED EQUIPMENT

EQUIPMENT	AIR FLOW	EHAUST STATIC PRESSURE	EXHAUST CONNECTION	REMARKS
	(CFM)	INCH OF WATER	INCH	
CORROSIVE STORAGE CABINET	20	--	2"	NOT REGULATED.
VENTILATED STORAGE CABINET	20	--	2"	NOT REGULATED.
ARCHITECTURAL SOFFIT	SEE PLAN	--	--	ALL ROOM EXHAUST THROUGH ARCHITECTURAL SOFFIT

NOTES:
-AIR FLOW FROM VARIOUS MANUFACTURERS MAY BE 2% TO 10% LOWER. LABCONCO PRODUCTS MAY REQUIRE 11% TO 18% ADDITIONAL AIR FLOW.
-MAXIMUM FUME HOOD AIR FLOW CORRESPONDS TO 18" OPEN SASH POSITION. NO DIVERSITIES SHOULD BE APPLIED FOR SIZING THE BUILDING EXHAUST SYSTEM AND FANS FOR CV SYSTEM.
-SHASH HEIGHT DEFINED FROM THE WORK SURFACE.

THE FUME HOOD SCHEDULE IS APPLICABLE FOR CV, VAV, OR COMBINATION EXHAUST SYSTEMS. SYSTEM SELECTION, IMPLEMENTED BY MECHANICAL DESIGNER, SHOULD BE A DESIGN TEAM DECISION WITH OWNER'S PARTICIPATION.

tBP
architecture
planning
interiors
management

tBP/architecture
1000 Burnett Avenue, Suite 140
Concord, CA 94520
p: 925.246.6419 f: 925.246.6495

RFD
RESEARCH FACILITIES DESIGN
3686 Fifth Avenue, Suite 300
San Diego, California 92103
619 . 294 . 4901
FAX 619 . 294 . 4901

LICENSED ARCHITECT
STEVEN E. TOWNE
No. C14749
REN. 7-15
STATE OF CALIFORNIA

IDENTIFICATION STAMP
DIV. OF THE STATE ARCHITECT
OFFICE OF REGULATION SERVICES
APPL. - 01106226
DATE 1-11-05

name
address
city, state, zip
ph: fx:

SCIENCE BUILDING LOS MEDANOS COLLEGE

Contra Costa Community College District

tBP project number : 20241.00
file name: NOTES & SCHEDULES
drawn by: DI checked by: DI
date: NOVEMBER 15, 2004

Rev.	date:	description

drawing title:
LABORATORY FURNISHINGS NOTES & SCHEDULES

LMC SCIENCE 313-023-T12.01-0-00.00
drawing no:
LF1-01

ADDENDUM
DSA FILE # 7-G1
DSA APPL# 01-106226

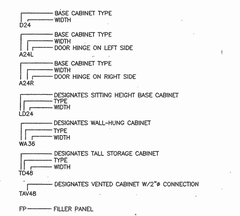

CASEWORK LEGEND

LABORATORY FURNISHINGS CASEWORK MENU

SCIENCE BUILDING
LOS MEDANOS COLLEGE
Pittsburg CA
Contra Costa Community College School District
ARCHITECT
dBHarchitecture
3000 Summit Ave, Suite 340
Concord, CA 94520
p: 925.246.6439 f: 925.246.6493
architecture planning interiors sustainable management

LICENSED ARCHITECT
DAVID BRYANT HOYT
No. C-14746
STATE OF CALIFORNIA

ADDENDUM #2
DATE: 04/19/05
DSA NO: 01-106226
THIS REVISES IN PART
SHEET: LFI-C2
SHEET: LFR-5

ADDENDUM
DSA FILE # 7-G1
DSA APPL# 01-106226

NOTE:
ALL SHELVES TO BE ADJUSTABLE U.O.N.

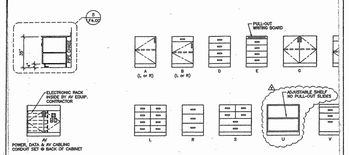

STANDING HEIGHT BASE CABINETS (WOOD U.O.N.)

LABORATORY FURNISHINGS CASEWORK MENU

SCIENCE BUILDING
LOS MEDANOS COLLEGE
Pittsburg CA
Contra Costa Community College School District
ARCHITECT
dBHarchitecture
3000 Summit Ave, Suite 340
Concord, CA 94520
p: 925.246.6439 f: 925.246.6493
architecture planning interiors sustainable management

LICENSED ARCHITECT
DAVID BRYANT HOYT
No. C-14746
STATE OF CALIFORNIA

ADDENDUM #2
DATE: 04/19/05
DSA NO: 01-106226
THIS REVISES IN PART
SHEET: LFI-C2
SHEET: LFR-6

ADDENDUM
DSA FILE # 7-G1
DSA APPL# 01-106226

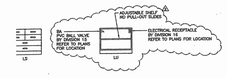

LABORATORY FURNISHINGS CASEWORK MENU

SCIENCE BUILDING
LOS MEDANOS COLLEGE
Pittsburg CA
Contra Costa Community College School District
ARCHITECT
dBHarchitecture
3000 Summit Ave, Suite 340
Concord, CA 94520
p: 925.246.6439 f: 925.246.6493
architecture planning interiors sustainable management

LICENSED ARCHITECT
DAVID BRYANT HOYT
No. C-14746
STATE OF CALIFORNIA

ADDENDUM #2
DATE: 04/19/05
DSA NO: 01-106226
THIS REVISES IN PART
SHEET: LFI-C2
SHEET: LFR-7

ADDENDUM
DSA FILE # 7-G1
DSA APPL# 01-106226

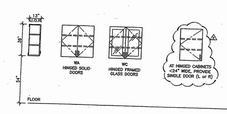

WALL CABINETS (WOOD)

LABORATORY FURNISHINGS CASEWORK MENU

SCIENCE BUILDING
LOS MEDANOS COLLEGE
Pittsburg CA
Contra Costa Community College School District
ARCHITECT
dBHarchitecture
3000 Summit Ave, Suite 340
Concord, CA 94520
p: 925.246.6439 f: 925.246.6493
architecture planning interiors sustainable management

LICENSED ARCHITECT
DAVID BRYANT HOYT
No. C-14746
STATE OF CALIFORNIA

ADDENDUM #2
DATE: 04/19/05
DSA NO: 01-106226
THIS REVISES IN PART
SHEET: LFI-C2
SHEET: LFR-8

ADDENDUM
DSA FILE # 7-G1
DSA APPL# 01-106226

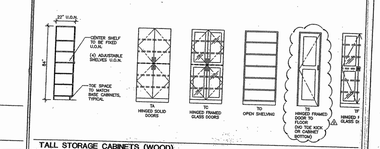

TALL STORAGE CABINETS (WOOD)

LABORATORY FURNISHINGS CASEWORK MENU

SCIENCE BUILDING
LOS MEDANOS COLLEGE
Pittsburg CA
Contra Costa Community College School District
ARCHITECT
dBHarchitecture
3000 Summit Ave, Suite 340
Concord, CA 94520
p: 925.246.6439 f: 925.246.6493
architecture planning interiors sustainable management

LICENSED ARCHITECT
DAVID BRYANT HOYT
No. C-14746
STATE OF CALIFORNIA

ADDENDUM #2
DATE: 04/19/05
DSA NO: 01-106226
THIS REVISES IN PART
SHEET: LFI-C2
SHEET: LFR-9

ADDENDUM
DSA FILE # 7-G1
DSA APPL# 01-106226

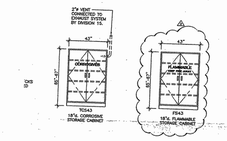

LABORATORY FURNISHINGS CASEWORK MENU

SCIENCE BUILDING
LOS MEDANOS COLLEGE
Pittsburg CA
Contra Costa Community College School District
ARCHITECT
dBHarchitecture
3000 Summit Ave, Suite 340
Concord, CA 94520
p: 925.246.6439 f: 925.246.6493
architecture planning interiors sustainable management

LICENSED ARCHITECT
DAVID BRYANT HOYT
No. C-14746
STATE OF CALIFORNIA

ADDENDUM #2
DATE: 04/19/05
DSA NO: 01-106226
THIS REVISES IN PART
SHEET: LFI-C2
SHEET: LFR-10

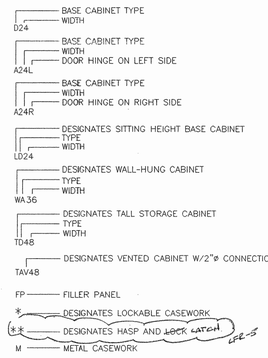

CASEWORK LEGEND

NOTE:
ALL SHELVES TO BE ADJUSTABLE U.O.N.

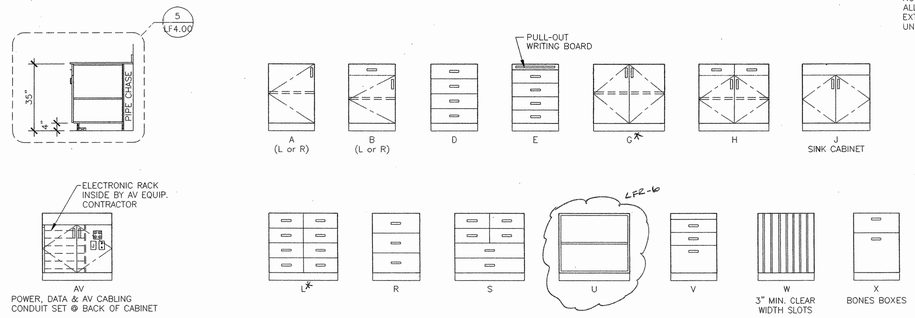

NOTE:
ALL SHELVES TO HAVE FULL EXTENSION PULL-OUT GUIDES UNLESS OTHERWISE NOTED (1 / LF4.01)

STANDING HEIGHT BASE CABINETS (WOOD U.O.N.)

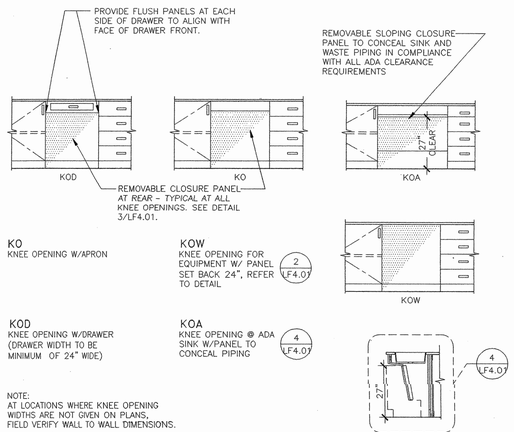

KO
KNEE OPENING W/APRON

KOW
KNEE OPENING FOR EQUIPMENT W/ PANEL SET BACK 24", REFER TO DETAIL

KOD
KNEE OPENING W/DRAWER (DRAWER WIDTH TO BE MINIMUM OF 24" WIDE)

KOA
KNEE OPENING @ ADA SINK W/PANEL TO CONCEAL PIPING

NOTE:
AT LOCATIONS WHERE KNEE OPENING WIDTHS ARE NOT GIVEN ON PLANS, FIELD VERIFY WALL TO WALL DIMENSIONS.

KNEE OPENINGS

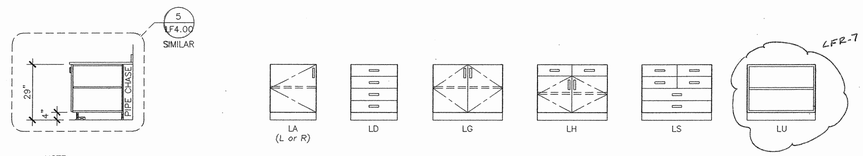

NOTE:
ALL SHELVES TO BE ADJUSTABLE U.O.N.

Refer to Drawing LF1-02, Laboratory Furnishings Casework Menu: Addenda No. 3

a. All 'CS' and 'SS' cabinets below fume hoods to be metal.
b. 'FH' and 'FV' cabinets below fume hoods to be metal unless otherwise noted. Where 'FH' and 'FV' cabinets occur adjacent to wood cabinets below fume hoods, 'FH' and 'FV' cabinets to be wood to match adjacent cabinets.
c. All 'L48' cabinets below fume hoods to be wood.
d. All 'G' cabinets below fume hoods including 'G36' rolling cabinet to be wood.

SITTING HEIGHT BASE CABINETS (WOOD U.O.N.)

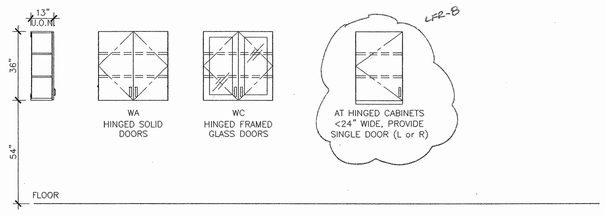

WALL CABINETS (WOOD)

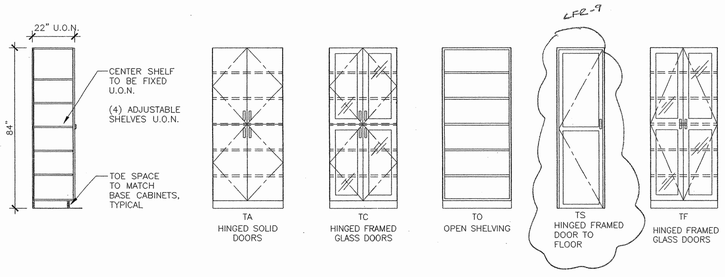

TALL STORAGE CABINETS (WOOD)

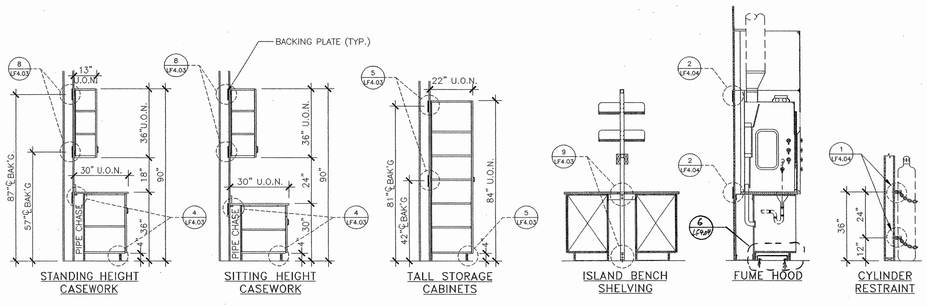

BACKING HEIGHTS AND ANCHORAGE

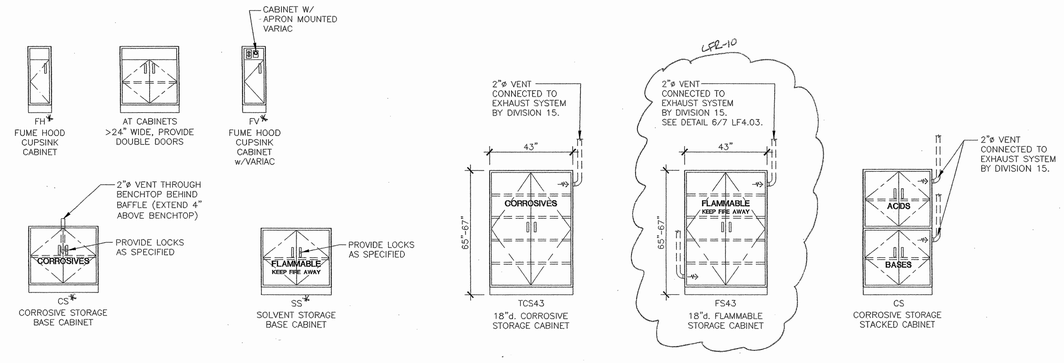

SPECIAL BASE CABINETS

tBP
architecture
planning
interiors
management

tBP/Architecture
1000 Burnett Avenue, Suite 140
Concord, CA 94520
p: 925.246.6419 f: 925.246.6495

LICENSED ARCHITECT
KARTHIK A. VIJAYAKUMAR
No. C-5485
STATE OF CALIFORNIA

LICENSED ARCHITECT
REAM-TOWNE
No. C14749
REN. 12/31/05
STATE OF CALIFORNIA

RFD
RESEARCH FACILITIES DESIGN
3665 Fifth Avenue, Suite 200
San Diego, California 92103
TEL: 619 . 297 . 0160
FAX: 619 . 294 . 4601

IDENTIFICATION STAMP
DIV. OF THE STATE ARCHITECT
OFFICE OF REGULATION SERVICES
APPR. - 05 SHEETS
APPROVED BY: [illegible]
DATE: 1-14-05

name
address
city, state, zip
ph:
fx:

SCIENCE BUILDING
LOS MEDANOS COLLEGE

Contra Costa Community College District

tBP project number: 2024T.00
file name: CASEWORK MENU
drawn by: DI checked by: DI
date: NOVEMBER 15, 2004

Rev	date	description

drawing title:
LABORATORY FURNISHINGS CASEWORK MENU

LMC SCIENCE 313-023-T12.01-0-00.00
drawing no:
LF1-02

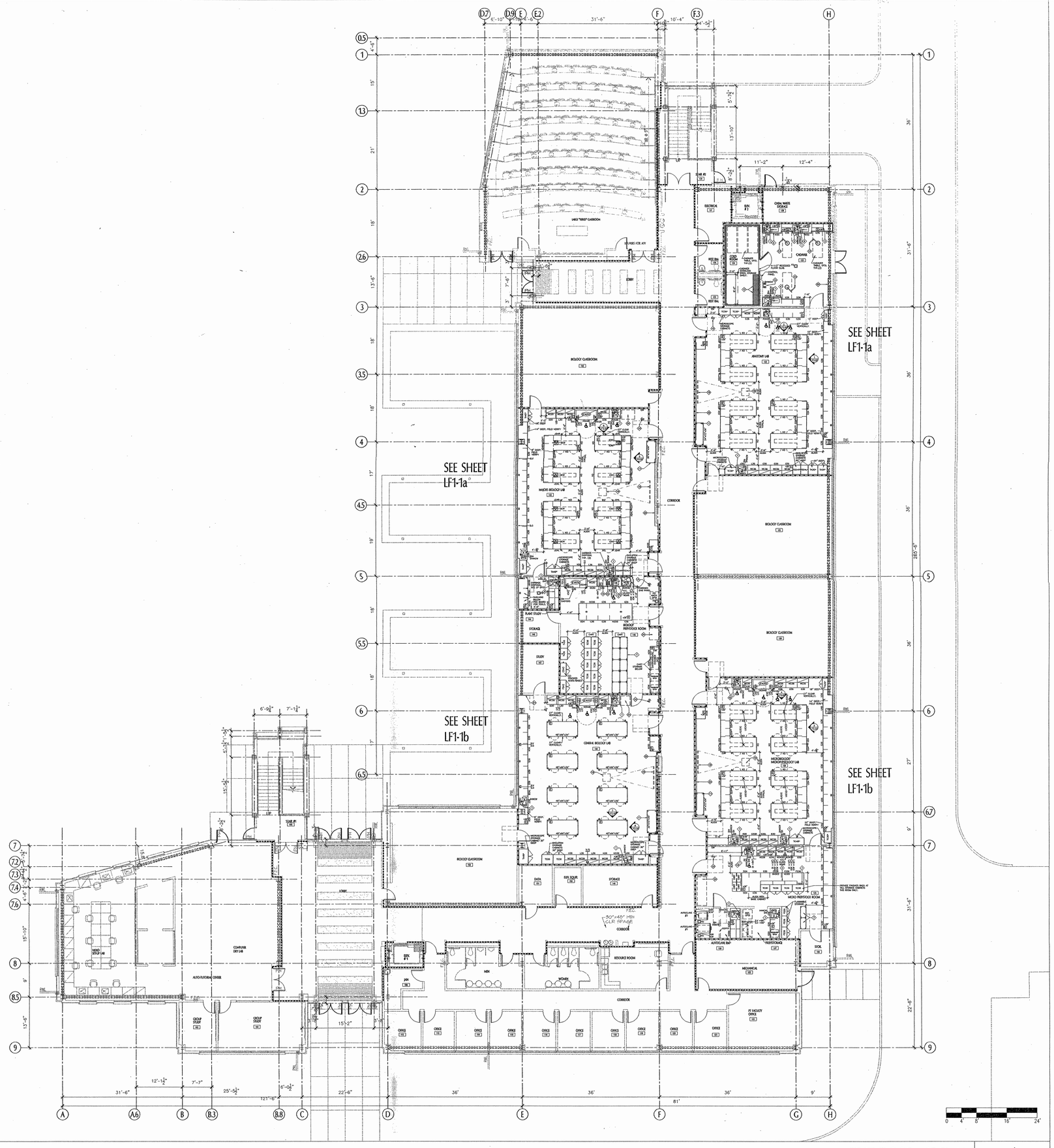

DESIGN NORTH

TRUE NORTH

tBP
architecture
planning
interiors
management

tBP/Architecture
1000 Burnett Avenue, Suite 140
Concord, CA 94520
p: 925.246.6419 f: 925.246.6495

LICENSED ARCHITECT
REGISTERED PROFESSIONAL ENGINEER
STATE OF CALIFORNIA

RFD
RIMBACH FACILITIES DESIGN
3888 Pico Boulevard, Suite 200
San Diego, California 92109
Tel: 619 . 272 . 0500
FAX: 619 . 294 . 4901

LICENSED ARCHITECT
SEAN E. TOWNE
No. C 14798
REN. 9-30
STATE OF CALIFORNIA

DENISE NOTH STAMP
DIV. OF STATE ARCHITECT
OFFICE OF REGULATION SERVICES
APPL. 05-109029
AC
DATE

name
address
city, state, zip
ph: fx:

SCIENCE BUILDING
LOS MEDANOS COLLEGE

Contra Costa Community College District

tBP project number : 202411.00
file name: 1ST-FLR-PLAN
drawn by: DI checked by: DI
date: NOVEMBER 15, 2004

Rev.	Date	description

drawing title:
FIRST FLOOR PLAN

LMC SCIENCE 313-023-112.01-0-00.00
drawing no.:
LF1-1

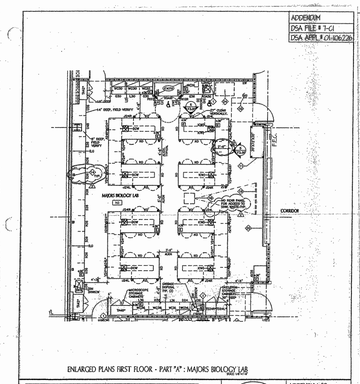

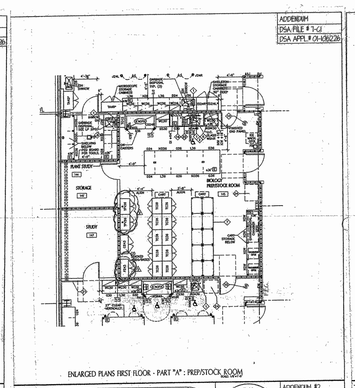

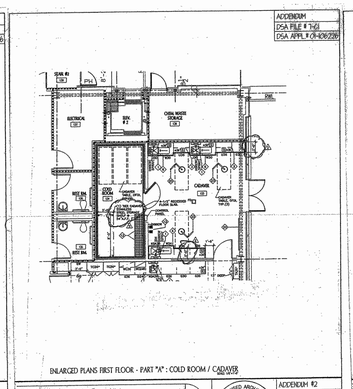

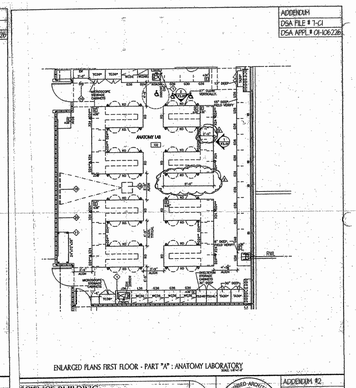

S. J. AMOROSO
Request For Information/Clarification

DSA FILE NO. 7-C1
DSA APPL. No. 01-106226

To: IBP/Architecture, 1000 Burnett Ave, Suite 140, Concord, CA 94520
Attn: Celia Chiang, Tom Beckett
Fax: 925-246-6495

Project: LOS MEDANOS COLLEGE, SCIENCE BUILDING, Contra Costa Community College District
IBP p/n: 20247.00

Subj.: Garbage disposals added in review of lab casework submittal
Reference (dwg, spec.): submittal 43

RFI No: **302**
Subcontractor RFI: Dowdle 55

Reply Requested By: 8/3/06

INFORMATION REQUESTED: Date: 7/27/06

Per submittal review comments to submittal no. 43 (lab casework shop drawings), 3 garbage disposals have been added. Please provide make and model of the added garbage disposals.

SUGGESTED SOLUTION:
Cost Impact: ☐ Schedule Impact: ☐ days By: Justin Warren

RESPONSE: DATE:

Provide garbage disposals per specification section 15410, 2.03.A. Also see the electrical service to the garbage disposals per Lab Electrical drawings.

Richard Cate/RFI
7/31/06

RFI # 000
Page 1

S. J. AMOROSO
Request For Information/Clarification

DSA FILE NO. 7-C1
DSA APPL. No. 01-106226

To: IBP/Architecture, 1000 Burnett Ave, Suite 140, Concord, CA 94520
Attn: Celia Chiang, Tom Beckett
Fax: 925-246-6495

Project: LOS MEDANOS COLLEGE, SCIENCE BUILDING, Contra Costa Community College District
IBP p/n: 20247.00

Subj.: Garbage disposals and deep sinks interfering with AGA access
Reference (dwg, spec.): Submittal 43

RFI No: **356**
Subcontractor RFI:

Reply Requested By: 10/2/06

INFORMATION REQUESTED: Date: 9/25/06

In review of submittal 43, lab casework, a garbage disposal was added on sheet 1 (north wall of Majors Biology Lab 143). Also, on sheet 14 (north wall of Biology Prep/stock room 145) a 12" deep sink is shown. On sheet 55 (north wall of Micro Prep/stock room 125) a 12" deep sink is shown. Each of these three locations is called out as knee space panels for ADA access but the garbage disposal and deep sinks would seem to conflict with required ADA clearances. Please advise.

SUGGESTED SOLUTION:
Cost Impact: ☐ Schedule Impact: ☐ days By: Mark Delgado

RESPONSE: DATE:

No garbage disposal required in Room 135 and Room 145 per Laboratory Furnishings Construction Documents.
Garbage disposal located on north wall of Lab 143 (ADA sink location) should fit behind the ADA access panel (Detail B4/LF4.01). Refer to response on RFI #306 for similar installation.

Richard H. Cate/RFD - 9/27/06

RFI # 000
Page 1

S. J. AMOROSO
Request For Information/Clarification

DSA FILE NO. 7-C1
DSA APPL. No. 01-106226

To: IBP/Architecture, 1000 Burnett Ave, Suite 140, Concord, CA 94520
Attn: Celia Chiang, Tom Beckett
Fax: 925-246-6495

Project: LOS MEDANOS COLLEGE, SCIENCE BUILDING, Contra Costa Community College District
IBP p/n: 20247.00

Subj.: OFCI Equipment in Room 145
Reference (dwg, spec.): LF1-1a

RFI No: **453**
Subcontractor RFI: DDI 15

Reply Requested By: 12/27/06

INFORMATION REQUESTED: Date: 12/20/06

Please note the attached Dow Diversified RFI No. 15 regarding OFCI Equipment in Room 145. There is a countertop with legs that several pieces of OFCI equipment go under. Dow would like to confirm that the elevation is acceptable as drawn for this equipment. Please advise.

SUGGESTED SOLUTION:
Cost Impact: ☐ Schedule Impact: ☐ days By: Mark Delgado

RESPONSE: DATE:

Casework elevation is correct as shown.
Intent is to have equipment above the bench top and have cart storage below within the knee openings (KOW) as indicated on the LF plans.

Jim Weaver / IBP Architecture
Richard Cate/ RFD

1/5/07

RFI # 000
Page 1

Dow Diversified, Inc.

REQUEST FOR INFORMATION
Los Medanos College Science Building, 2352K

Proj RFI#:
DDI Rev#: 19

To: Mark Delgado
Fax: 925-427-7570
Subject: Equipment Dimensions
Spec: 11602
Drawings: LF1-1a--DDI 38 on 15
Room: 145 East

REQUEST:
On the East wall in room 145 there is a counterto with legs that several pieces of OFCI equipment go under.

Please provide that equipment dimensions to coordinate with the countertop or confirm that the elevation is acceptable as drawn.

The actual space available between the column and wall is 145-3/4".

SUGGESTION:
Confirm OK as drawn.

PRIORITY: ASAP
DUE DATE: 12/22/2006
BY: Ben Kemper
DATE: 12/15/2006

Response By:
Response Date:
RESPONSE:

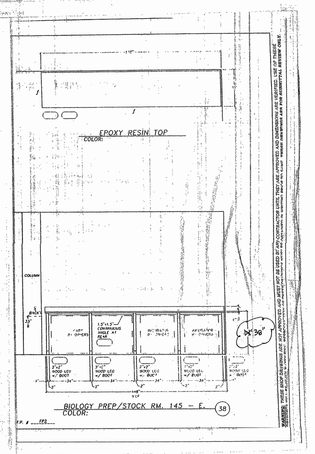

S. J. AMOROSO
Request For Information/Clarification

DSA FILE NO. 7-C1
DSA APPL. No. 01-106226

To: IBP/Architecture, 1000 Burnett Ave, Suite 140, Concord, CA 94520
Attn: Celia Chiang, Tom Beckett
Fax: 925-246-6495

Project: LOS MEDANOS COLLEGE, SCIENCE BUILDING, Contra Costa Community College District
IBP p/n: 20247.00

Subj.: Column Flange Conflict
Reference (dwg, spec.): LF1-1a

RFI No: **447**
Subcontractor RFI: DDI 13

Reply Requested By: 12/26/06

INFORMATION REQUESTED: Date: 12/15/06

Please note the attached Dow Diversified RFI No. 13 regarding the flange at the floor that sticks out from the columns at an angle about 4" from the framing around the column. There are some locations where the cabinets are supposed to butt right up next to the column right over the flange; such as at the southwest corner of room 143. This will cause the cabinets to sit out from the column by the length of the flange. Please advise.

SUGGESTED SOLUTION:
Cost Impact: ☐ Schedule Impact: ☐ days By: Mark Delgado

RESPONSE: DATE:

No exception taken to reducing cabinet width and providing filler at these locations.

Jim Weaver / IBP Architecture
Richard Cate / RFD

1/5/07

RFI # 000
Page 1

Dow Diversified, Inc.

REQUEST FOR INFORMATION
Los Medanos College Science Building, 2352K

Proj RFI#:
DDI Rev#: 13

To: Mark Delgado
Fax: 925-427-7570
Subject: Column Flange Conflict
Spec: 11602
Drawings: LF1-1a
Room: Varies

REQUEST:
The bottom of the building columns have a flange at the floor that sticks out from the columns at an angle about 4" from the framing around the column. There are some locations where the cabinets are supposed to butt right up next to the column right over the flange; such as at the South West corner of room 143.

This flange will cause the cabinets to sit out from the column by the length of the flange. Please confirm that it is acceptable to reduce the cabinet width to accommodate for the flange and adjust the filler piece to close off the area.

SUGGESTION:
Approve shortening the width of the cabinets that butt right next to a column with this flange.

PRIORITY: ASAP
DUE DATE: 12/22/2006
BY: Ben Kemper
DATE: 12/15/2006

Response By:
Response Date:
RESPONSE:

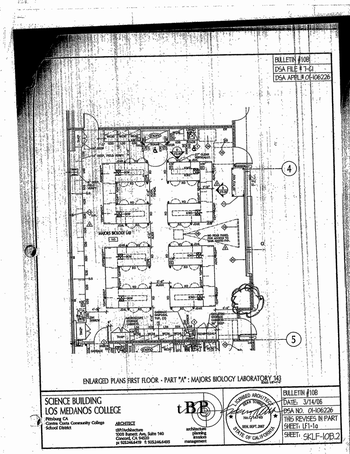

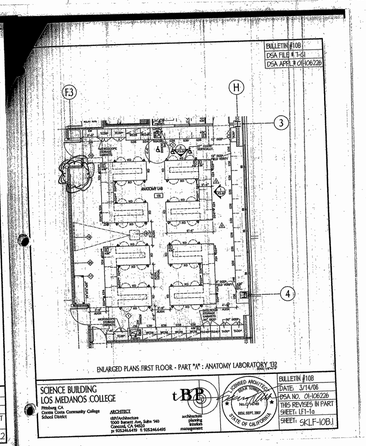

S. J. AMOROSO
Request For Information/Clarification

DSA FILE NO. 7-C1
DSA APPL. No. 01-106226

To: IBP/Architecture, 1000 Burnett Ave, Suite 140, Concord, CA 94520
Attn: Celia Chiang, Tom Beckett
Fax: 925-246-6495

Project: LOS MEDANOS COLLEGE, SCIENCE BUILDING, Contra Costa Community College District
IBP p/n: 20247.00

Subj.: Cadaver Tables and Casework
Reference (dwg, spec.): LF1-1a

RFI No: **449**
Subcontractor RFI: DDI 16

Reply Requested By: 12/26/06

INFORMATION REQUESTED: Date: 12/15/06

Please note the attached Dow Diversified RFI No. 16 regarding three moveable tables in the cadaver room 133. These tables appear to work with specific locations in the casework. Currently, the countertop is drawn with 34" clear in the countertop cutout for the table. This is because of a 1" overhand on each side of the cutout. Is 34 clear enough room side to side for the moveable cadaver tables or does this need to be increased? Please advise.

SUGGESTED SOLUTION:
Cost Impact: ☐ Schedule Impact: ☐ days By: Mark Delgado

RESPONSE: DATE: 12/27/06

Provide 34" clear space.

Richard Cate

RFI # 000
Page 1

Dow Diversified, Inc.

REQUEST FOR INFORMATION
Los Medanos College Science Building, 2352K

Proj RFI#:
DDI Rev#: 16

To: Mark Delgado
Fax: 925-427-7570
Subject: Cadaver Tables & Casework
Spec: 11602
Drawings: LF1-1a, DDI 48 on 22 and 49 on 23
Room: 133

REQUEST:
There are three moveable tables in room 133 that appear to work with specific locations in the casework.

Currently, the countertop is drawn with 34" clear in the countertop cutout for the table. This is because of a 1" overhand on each side of the cutout.

Is 34" clear enough room side to side for the moveable cadaver tables or does this need to be increased? If so, to what dimension?

SUGGESTION:

PRIORITY: ASAP
DUE DATE: 12/22/2006
BY: Ben Kemper
DATE: 12/15/2006

Response By:
Response Date:
RESPONSE:

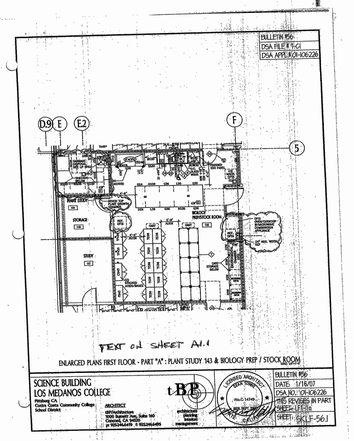

S. J. AMOROSO
Request For Information/Clarification

DSA FILE NO. 7-C1
DSA APPL. No. 01-106226

To: IBP/Architecture, 1000 Burnett Ave, Suite 140, Concord, CA 94520
Attn: Celia Chiang, Tom Beckett
Fax: 925-246-6495

Project: LOS MEDANOS COLLEGE, SCIENCE BUILDING, Contra Costa Community College District
IBP p/n: 20247.00

Subj.: Sink on the North Wall of Room 145 and 125
Reference (dwg, spec.): LF1-00, LF1-1a and LF1-1b

RFI No: **522**
Subcontractor RFI: DDI 25

Reply Requested By: 6/7/07

INFORMATION REQUESTED: Date: 4/30/07

Please note the attached Dow Diversified RFI No. 25 regarding the Sink Elevation on the North Wall of Room 145 and the North Wall of Room 125. The water, GI and Eyewash are all shown behind the sink. This sink is to be an ADA Sink. Please advise.

SUGGESTED SOLUTION:
Cost Impact: ☐ Schedule Impact: ☐ days By: Justin Warren

RESPONSE: DATE:

No exception taken to Option 1 per attached.

Jim Weaver / IBP Architecture
R. Cate / RFD

5/4/07

RFI # 000
Page 1

Dow Diversified, Inc.

REQUEST FOR INFORMATION
Los Medanos College Science Building, 2352K

Proj RFI#:
DDI Rev#: 25

To: Mark Delgado
Fax: 925-427-7570
Subject: ADA Sink Elevation Conflict
Spec: 11602
Drawings: LF1-00, LF1-1a, & LF1-1b
Room: 145 & 125

REQUEST:
Regarding the sink elevation on the North wall of room 145 and the North wall of room 125, both of these elevations show the water, GI and eyewash behind the sink. These elevations are also listed as an ADA location. In contrast the description of the ADA sink lists a note that says that the fixtures should be mounted on the side.

As the drawings show one thing and the notes say something else there is a conflict as to what was actually intended. This has created the following problems.

1. The countertop has been prepared in the factory as shown on the contract drawings with the fixture holes in the back.

2. If the fixtures are moved to the side opposite the drain grooves then the fixtures will interfere with the eyewash hose.

3. With the sink being specified as 12" deep the knee space panels cannot be installed like a normal ADA sink cabinet which looks like a KOA detail on sheet LF1-02.

Depending on the solution chosen there will be a time and cost impact.

SUGGESTION:
Option 1:
Leave the fixtures where they are and install the knee space panel behind the sink similar to a normal sink cabinet. We will continue the install as drawn and there will be no cost or time impact.

Option 2:
Drill new holes and move the fixtures to the right side of the sink. We will then plug and fill the old fixture holes. We will still have the same problem with the knee space panel installation. It suggest that we still install the panel behind the sink. There is a cost and time impact for moving the fixtures from the back of the sink as drawn.

PRIORITY: HIGH
DUE DATE: 5/1/2007
BY: Ben Kemper
DATE: 4/30/2007

Response By:
Response Date:
RESPONSE:

Los Medanos College
4CD Proj.# : L-S65-B-23-SC
Science Building

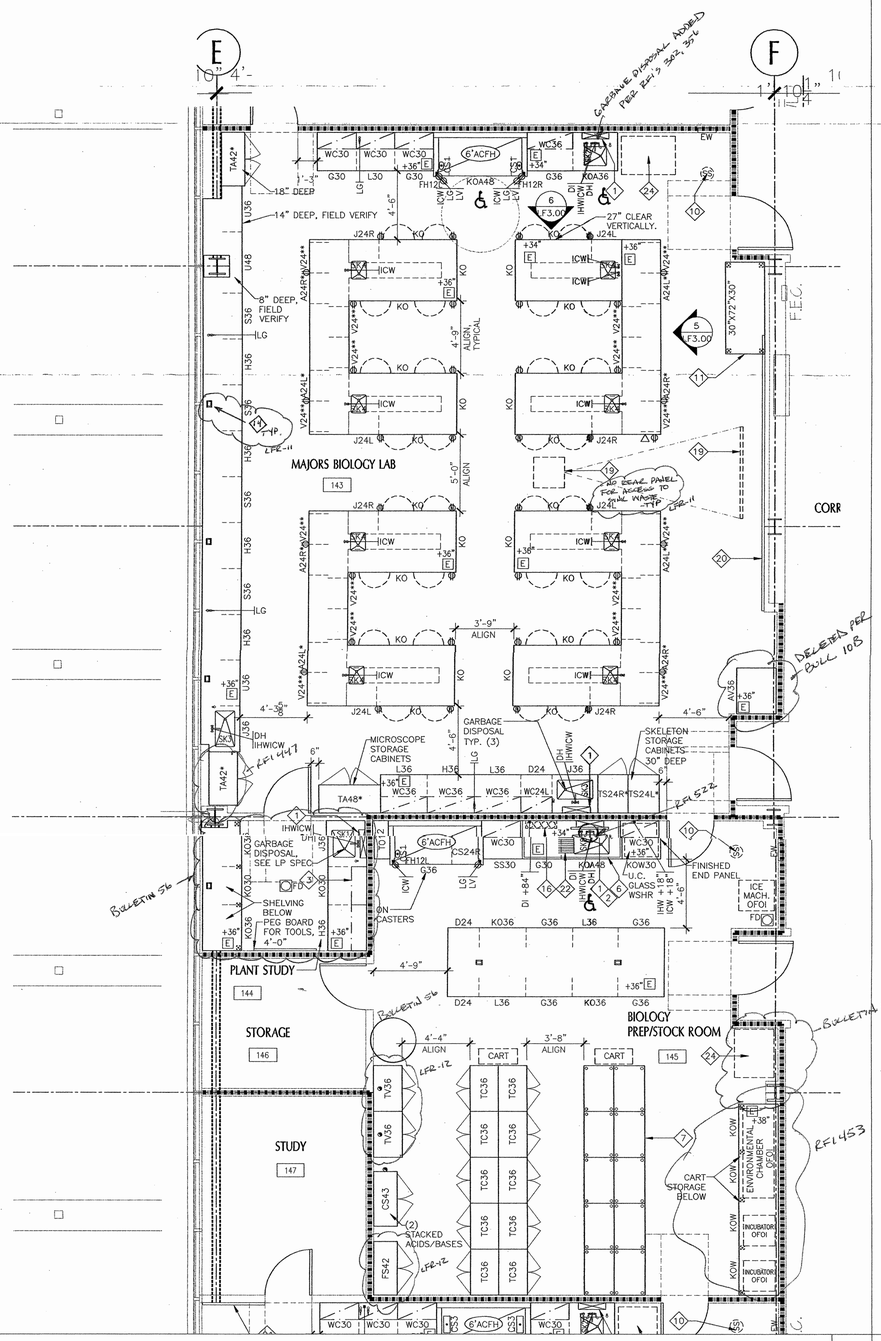

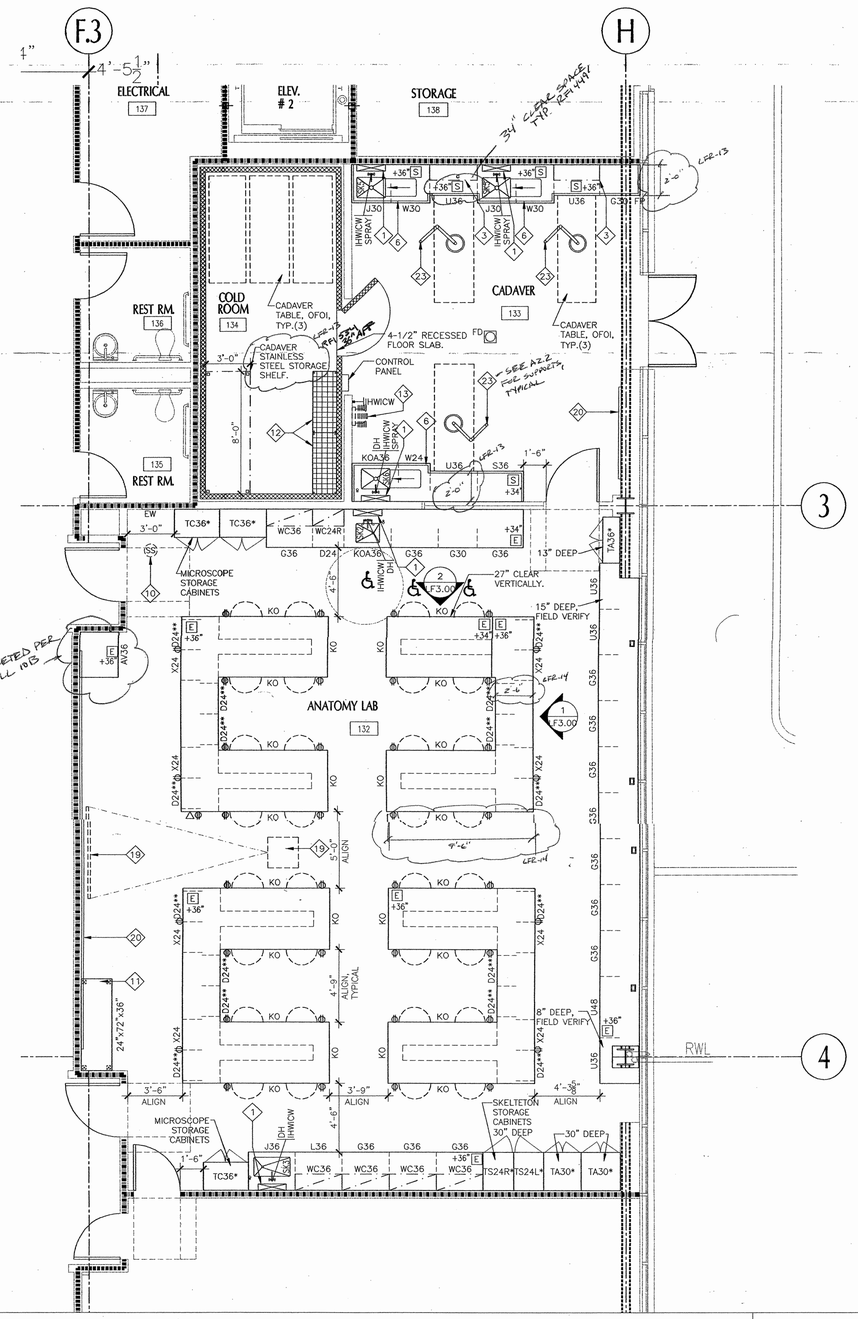

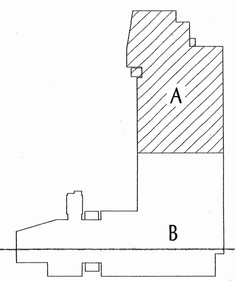

E
F
MAJORS BIOLOGY LAB
143
CORR
BIOLOGY PREP/STOCK ROOM
145
PLANT STUDY
144
STORAGE
146
STUDY
147
MICROSCOPE STORAGE CABINETS
SKELETON STORAGE CABINETS 30" DEEP
GARBAGE DISPOSAL TYP. (3)
GARBAGE DISPOSAL, SEE LP SPEC
SHELVING BELOW PEG BOARD FOR TOOLS, 4'-0"
ON CASTERS
ICE MACH. OFOI
FINISHED END PANEL
U.C. GLASS WSHR
CART STORAGE BELOW
ENVIRONMENTAL CHAMBER OFOI
INCUBATOR OFOI
(2) STACKED ACIDS/BASES
14" DEEP, FIELD VERIFY
18" DEEP
8" DEEP, FIELD VERIFY
27" CLEAR VERTICALLY.
ALIGN, TYPICAL
F.E.C.
30"x72"x30"
GARBAGE DISPOSAL ADDED PER RFI'S 302, 356
DELETED PER BULL 10B
BULLETIN 56
RFI 453
RFI 447
RFI 522
NO REAR PANEL FOR ACCESS TO NEUTRAL WASTE TYP. LFR-11

MAJORS BIOLOGY AND PREP/STOCK ROOM 1

SCALE: 1/4"=1'-0"

F.3
H
3
4
ELECTRICAL
137
ELEV. # 2
STORAGE
138
REST RM.
136
REST RM.
135
COLD ROOM
134
CADAVER
133
ANATOMY LAB
132
CADAVER TABLE, OFOI, TYP. (3)
CADAVER STAINLESS STEEL STORAGE SHELF
4-1/2" RECESSED FLOOR SLAB.
CONTROL PANEL
MICROSCOPE STORAGE CABINETS
SKELETON STORAGE CABINETS 30" DEEP
13" DEEP
15" DEEP, FIELD VERIFY
8" DEEP, FIELD VERIFY
27" CLEAR VERTICALLY.
24"x72"x36"
ALIGN, TYPICAL
RWL
34" CLEAR SPACE TYP. RFI 441
SEE A2.2 FOR SUPPORTS TYPICAL
DELETED PER BULL 10B
DESIGN NORTH
TRUE NORTH
0 2 4 8 16

ANATOMY LABORATORY AND COLD ROOM 2

SCALE: 1/4"=1'-0"

KEY PLAN

tBP
architecture
planning
interiors
management

tBP/Architecture
1000 Burnett Avenue, Suite 140
Concord, CA 94520
p: 925.246.6419 f: 925.246.6495

RICHARD A. MANGO
NO. C-8685
REN. 12-31-

SEAN E. TOWNE
No. C 14749
REN. 9-05

RFD
RESEARCH FACILITIES DESIGN
3965 Fifth Avenue, Suite 300
San Diego, California 92103
TEL 619 · 297 · 0159
FAX 619 · 294 · 4901

IDENTIFICATION STAMP
DIV. OF THE STATE ARCHITECT
OFFICE OF REGULATION SERVICES
APPL · 01-106226
AC DS FLS SS
DATE 1-12-05

name
address
city, state, zip
ph: fx:

SCIENCE BUILDING
LOS MEDANOS COLLEGE

Contra Costa Community College District

tBP project number : 20241.00
file name: IST-FLR-PLAN
drawn by: DI checked by: DI
date: NOVEMBER 15, 2004

Rev.	date:	description:

drawing title: 1
ENLARGED PLANS
FIRST FLOOR - PART "A"
LMC SCIENCE 313-023-112.01-0-00.00
drawing no.
LF1-1a

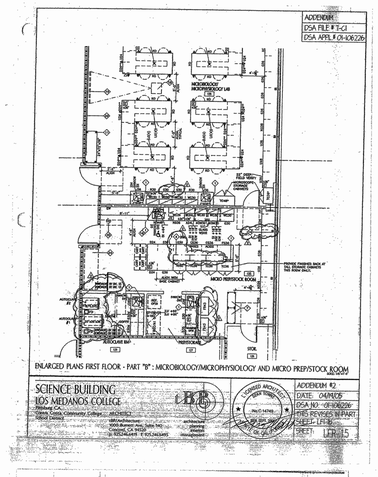

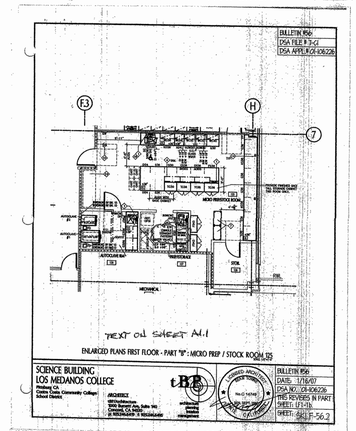

S. J. AMOROSO
Request For Information/Clarification

DSA FILE NO. 7-C1
DSA APPL. No. 01-106226

To: IBI/Architecture
1000 Burnett Ave, Suite 140
Concord, CA 94520

Attn: Celia Chiang, Tom Beckett
Fax: 925-246-6495

Project: LOS MEDANOS COLLEGE SCIENCE BUILDING
Contra Costa Community College District

IBI# p/c: 20247.00

Subj.: Location of fill valves in Room 125

Reference (dwg, spec.): Bulletin No. 56

RFI No: **466**
Subcontractor RFI: Dowdle 73

Reply Requested By: 1/30/07

INFORMATION REQUESTED: Date: 1/23/07

Please note the attached Dowdle and Sona RFI regarding the location of the fill valves for the Bench Top Ice Machine in Room 125, depicted in Bulletin No. 56. Please advise.

SUGGESTED SOLUTION:
Cost Impact: ☐ Schedule Impact: ☐ days By: Justin Warren

RESPONSE: DATE:

See attached sketch SKLF-466.1.

Jim Weaver / IBI Architecture
R. Cate / RFD

1/26/07

RFI # 000
Page 1

S. J. AMOROSO
Request For Information/Clarification

DSA FILE NO. 7-C1
DSA APPL. No. 01-106226

To: IBI/Architecture
1000 Burnett Ave, Suite 140
Concord, CA 94520

Attn: Celia Chiang, Tom Beckett
Fax: 925-246-6495

Project: LOS MEDANOS COLLEGE SCIENCE BUILDING
Contra Costa Community College District

IBI# p/c: 20247.00

Subj.: Location of fill valves in Room 125

Reference (dwg, spec.): Bulletin No. 56

RFI No: **466.1**
Subcontractor RFI: Dowdle 73

Reply Requested By: 1/30/07

INFORMATION REQUESTED: Date: 1/23/07

Dowdle has suggested that, to save sheetrock costs, the plumbing for the bench top ice machine could be accomplished by installing a dual angle stop on the supply to the sink and running supply below the countertop to the ice machine location. Is this acceptable, please advise.

SUGGESTED SOLUTION:
Cost Impact: ☐ Schedule Impact: ☐ days By: Justin Warren

RESPONSE: DATE:

No exception taken. Provide a hole penetration adjacent to counter top ice machine for routing of supply hose.

Jim Weaver / IBI Architecture
R. Cate / RFD

2/8/07

RFI # 000
Page 1

S. J. AMOROSO
Request For Information/Clarification

DSA FILE NO. 7-C1
DSA APPL. No. 01-106226

To: IBI/Architecture
1000 Burnett Ave, Suite 140
Concord, CA 94520

Project: LOS MEDANOS COLLEGE SCIENCE BUILDING
Contra Costa Community College District

Attn: Celia Chiang, Tom Beckett
Fax: 925-246-6495

IBI# p/c: 20247.00

Subj.: Locations of gas fixtures at ADA lab tops

Reference (dwg, spec.): LP1-1b ,LP1-1b

RFI No: **519**
Subcontractor RFI: EWB 86

Reply Requested By: 4/27/07

INFORMATION REQUESTED: Date: 4/20/07

In lab 129, there are 4 large "U" shaped lab casework tables. The lab casework table to the north-west portion of the room has a lowered, ADA accessible countertop. This top, like all other tops in the room has a gas a single, "4-headed" gas turret centered in the epoxy top. Should this instead be two, "2-headed" gas turrets located nearer the edges of the counter top to allow ADA "reach" from a person in a wheelchair? Please advise.

Changing this involve swapping out the single fixture for two different fixtures, plugging the existing hole in the counter top and drilling two new holes.

SUGGESTED SOLUTION:
Cost Impact: ☐ Schedule Impact: ☐ days By: Justin Warren

RESPONSE: DATE:

Yes, as graphically indicated and labeled at 3/LF3.00 Install as two (2) headed gas turrets at this location. Install turret at the accessible side as far toward the counter edge but within the utility chase. This should place turret handle approx. 20" from counter edge. Non accessible side turret could remain in existing hole.

Jim Weaver / IBI Architecture
R. Cate / RFD

4/24/07

RFI # 000
Page 1

Sona & Sona Mechanical, Inc.
1 Rev to date
Job: 457 Los Medanos
Ph: (925)24-0466

RFI

To: Mark Delgado
S.J Amoroso
360 Bridge Parkway
Redwood Shores, CA 94065
Ph: 800-427/7867 Fax 925-427/7970

RFI #: 73
Date: 1/23/2007
Job: 457 Los Medanos College
Phone: 925-427-7007

CC:

Subject: Bulletin 56 - ICW Location in Room 125

Drawing:
Cost Impact:
Spec Section:
Schedule Impact:

Request: Date Required: 1/29/2007
Please provide location of ICW in Bench Top Ice Machine in Room 125, depicted in Bulletin 56.

Requested by: Ofelyd Fonseca
Dowdle & Sona Mechanical, Inc.

Response:

Approved By:
Company Date

Page 1 of 1

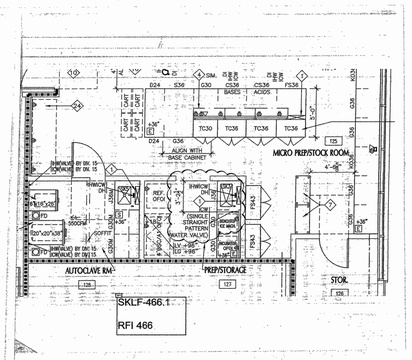

Los Medanos College
4CD Proj.# : L-565-B-23-SC
Science Building

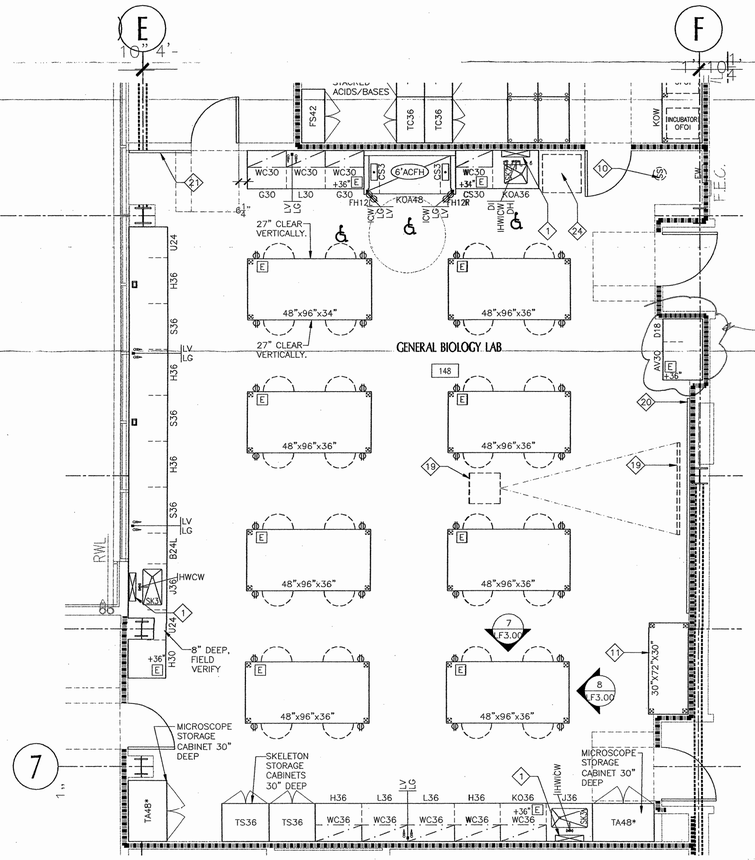

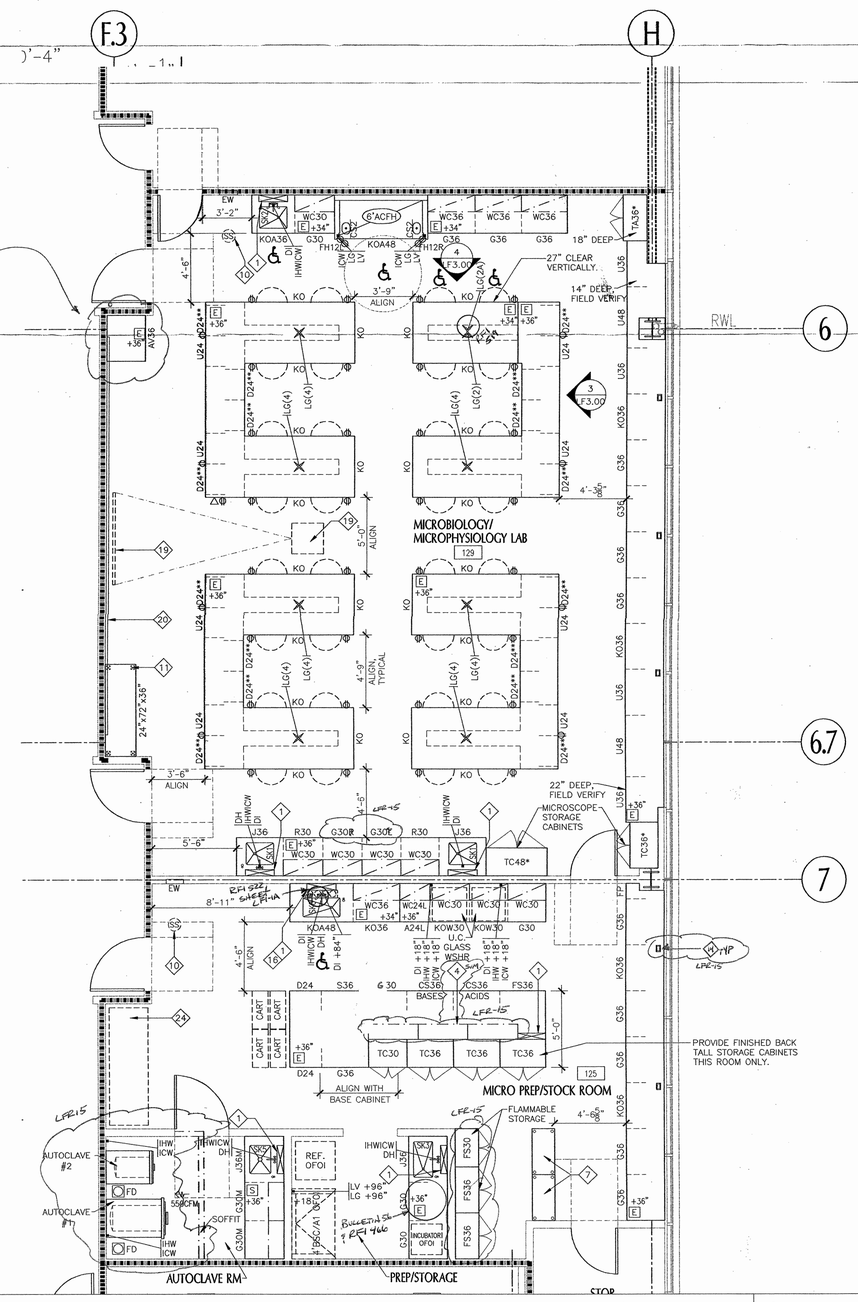

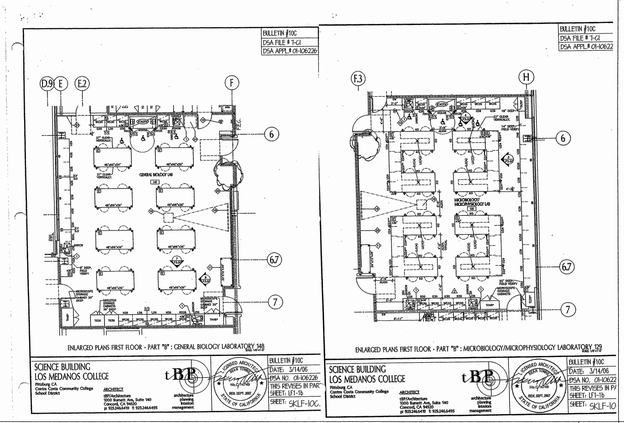

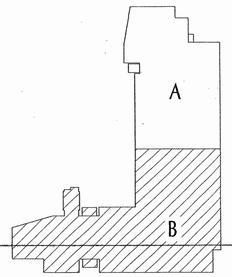

E
F
7
GENERAL BIOLOGY LAB
148
48"x96"x34"
48"x96"x36"
27" CLEAR VERTICALLY.
ACIDS/BASES
FS42
TC36
KOW
INCUBATOR OFOI
6'ACFH
KOA48
KOA36
FH12L
FH12R
WC30
G30
L30
U24
H36
S36
B24L
J36
IHWCW
RWL
8" DEEP, FIELD VERIFY
H30
MICROSCOPE STORAGE CABINET 30" DEEP
SKELETON STORAGE CABINETS 30" DEEP
TS36
TA48*
30"X72"X30"
F.E.C.

BULLETIN #10C
DSA FILE # 7-C2
DSA APPL # 01-106226
ENLARGED PLANS FIRST FLOOR - PART "B" : GENERAL BIOLOGY LABORATORY 148
ENLARGED PLANS FIRST FLOOR - PART "B" : MICROBIOLOGY/MICROPHYSIOLOGY LABORATORY 129
SCIENCE BUILDING
LOS MEDANOS COLLEGE
tBP
SHEET: SKLF-10C

DELETED PER BULLETIN 10C
F.3
H
6
6.7
7
RWL
MICROBIOLOGY/ MICROPHYSIOLOGY LAB
129
KO
LG(4)
LG(2)
D24**
U24
U36
U48
G36
KO36
24"x72"x36"
4'-9" ALIGN TYPICAL
5'-0" ALIGN
3'-9" ALIGN
3'-6" ALIGN
27" CLEAR VERTICALLY.
14" DEEP, FIELD VERIFY
18" DEEP
22" DEEP, FIELD VERIFY
MICROSCOPE STORAGE CABINETS
TC48*
TC36*
TA36*
6'ACFH
KOA48
KOA36
FH12L
FH12R
WC30
WC36
R30
J36
EW
RFI 522 SHEET
MICRO PREP/STOCK ROOM
125
TC30
TC36
BASES
ACIDS
CART
ALIGN WITH BASE CABINET
PROVIDE FINISHED BACK TALL STORAGE CABINETS THIS ROOM ONLY.
FLAMMABLE STORAGE
FS30
FS36
INCUBATOR OFOI
REF. OFOI
AUTOCLAVE #2
AUTOCLAVE
AUTOCLAVE RM
PREP/STORAGE
SOFFIT
BULLETIN 56 RFI 466
BSC/A1
G30M
J36M
550CFM
FD
IHW
ICW
LV +96"
LG +96"
LFR-15
DESIGN NORTH
TRUE NORTH
0 2 4 8 16

GENERAL BIOLOGY LABORATORY 1
SCALE: 1/4"=1'-0"

MICROPHYSIOLOGY LABORATORY AND PREP/ STOCKROOM 2
SCALE: 1/4"=1'-0"

KEY PLAN

tBP

architecture
planning
interiors
management

LICENSED ARCHITECT
RICHARD A. MANGUM, AIA.
NO. C-8685
REN. 12-31-05
STATE OF CALIFORNIA

tBP/Architecture
1000 Burnett Avenue, Suite 140
Concord, CA 94520
p: 925.246.6419 f: 925.246.6495

LICENSED ARCHITECT
SEAN E. TOWNE
No. C 14749
REN. 9.05
STATE OF CALIFORNIA

RFD
RESEARCH FACILITIES DESIGN
3965 Fifth Avenue, Suite 300
San Diego, California 92103
TEL 619 · 297 · 0159
FAX 619 · 294 · 4901

IDENTIFICATION STAMP
DIV. OF THE STATE ARCHITECT
OFFICE OF REGULATION SERVICES
APPL · 01-106226
AC ~~25~~ FLS ___ SS ___
DATE 1-12-05

name
address
city, state, zip
ph: fx:

SCIENCE BUILDING
LOS MEDANOS COLLEGE

Contra Costa Community College District

tBP project number : 20241.00

file name: IST-FLR-PLAN

drawn by: DI checked by: DI

date: NOVEMBER 15, 2004

Rev date description

drawing title: 1

ENLARGED PLANS
FIRST FLOOR - PART "B"

LMC SCIENCE 313-023-112.01-0-00.00

drawing no: LF1-1b

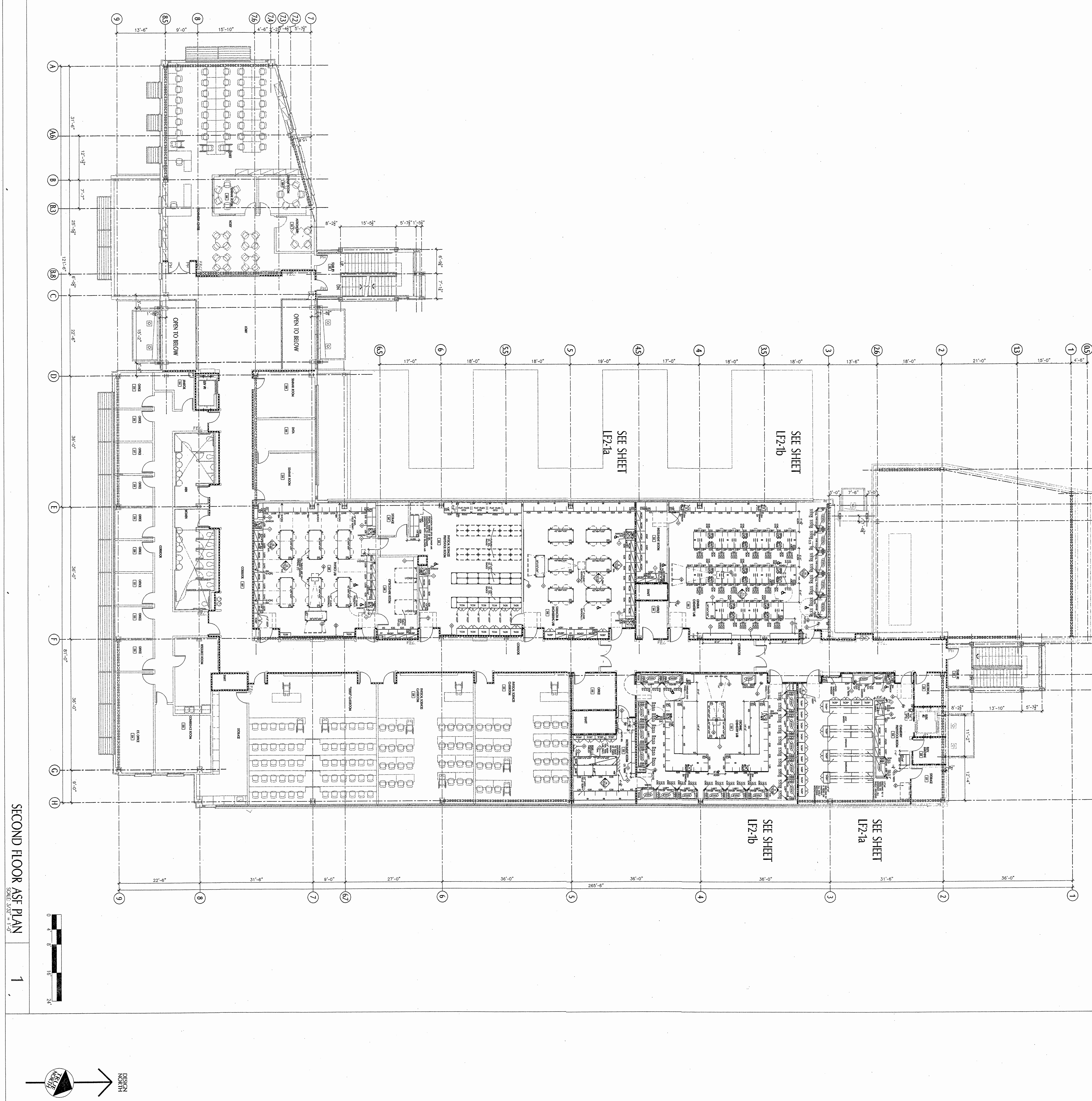

tBP project number : 2024.00
file name: IST-FLR-PLAN
drawn by: DI checked by: DI
date: NOVEMBER 15, 2004
Rev. date description

drawing title:
SECOND FLOOR PLAN
LMC SCIENCE 313-023-112.01-0-0-00.00
drawing no.:
LF2-1

SCIENCE BUILDING
LOS MEDANOS COLLEGE

Contra Costa Community College District

IDENTIFICATION STAMP
DIV. OF THE STATE ARCHITECT
OFFICE OF REGULATION SERVICES
APPL 01-106226
AC FLS SS
DATE 1-12-05

name
address
city, state, zip
ph: fx:

LICENSED ARCHITECT
SEAN E. TOWNE
No. C 14749
REN.
STATE OF CALIFORNIA

RFD
RESEARCH FACILITIES DESIGN
3965 Fifth Avenue, Suite 300
San Diego, California 92103
TEL 619 · 297 · 0159
FAX 619 · 294 · 4901

tBP/Architecture
1000 Burnett Avenue, Suite 140
Concord, CA 94520
p: 925.246.6419 f: 925.246.6495

tBP
architecture
planning
interiors
management

ADDENDUM
DSA FILE # 7-C1
DSA APPL # 01-106226

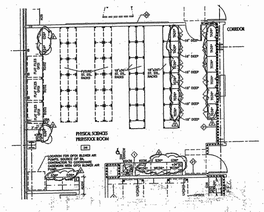

ENLARGED PLANS SECOND FIRST FLOOR - PART "A" : PHYSICAL SCIENCES PREP/STOCK ROOM

ADDENDUM #2
DATE: 04/18/05
DSA NO: 01-106226
HBS REVIEWS IN PART
SHEET: LF-36

SCIENCE BUILDING
LOS MEDANOS COLLEGE
Pittsburg Ca.
Contra Costa Community College District
ARCHITECT
tBP/Architecture
1000 Burnett Ave. Suite 140
Concord, CA 94520
p: 925.246.6491 f: 925.246.6495
structural engineering
mechanical electrical engineering
management
LICENSED ARCHITECT
REGISTERED PROFESSIONAL ENGINEER
SHEET: LFR-16

ADDENDUM
DSA FILE # 7-C1
DSA APPL # 01-106226

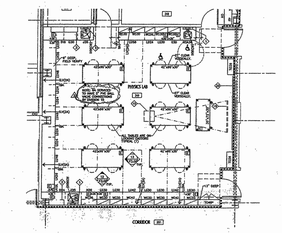

ENLARGED PLANS SECOND FIRST FLOOR - PART "A" : PHYSICS LAB

ADDENDUM #2
DATE: 04/18/05
DSA NO: 01-106226
HBS REVIEWS IN PART
SHEET: LF-37

SCIENCE BUILDING
LOS MEDANOS COLLEGE
Pittsburg Ca.
Contra Costa Community College District
ARCHITECT
tBP/Architecture
1000 Burnett Ave. Suite 140
Concord, CA 94520
p: 925.246.6491 f: 925.246.6495
structural engineering
mechanical electrical engineering
management
LICENSED ARCHITECT
REGISTERED PROFESSIONAL ENGINEER
SHEET: LFR-17

S. J. AMOROSO
Request For Information/Clarification

DSA FILE NO. 7-C1
DSA APPL. No. 01-106226

To: tBP/Architecture
1000 Burnett Ave, Suite 140
Concord, CA 94520

Attn: Celia Chiang, Tom Beckett
Fax: 925-246-6495

Subj: Cabinet Clearance on the North Wall of Room 236.
Reference (dwg, spec.): LF1-1a

Project: LOS MEDANOS COLLEGE
SCIENCE BUILDING
Contra Costa Community College District

tBP p/n: 200417.00

RFI No: **451**
Subcontractor RFI: CCI 17

Reply Requested By: 12/26/06

INFORMATION REQUESTED: Date: 12/18/06

Please note the attached Dow Diversified RFI No. 18 regarding a single cabinet and wall shelves between Door No. 241 and 242 at the north wall of Room 236. There is only 55-1/4" between the doorways which call for walls for 59-3/4". A 36" cabinet will not provide the clearances required on both sides but can be pushed to one side or the other to keep clearances on one particular side. Another option is to place a 30" cabinet in lieu of the 36" cabinet. Please advise.

SUGGESTED SOLUTION:
Cost Impact: ☐ Schedule Impact: ☐ days By: Mark Delgado

RESPONSE: DATE: 12/27/06

Provide 30" cabinet

Richard Cass

RFI # 000
Page 1

Dow Diversified, Inc.

REQUEST FOR INFORMATION
Los Medanos College Science Building, 2322K

Proj/PWI#:
CCI PWI#: 18

From: Mark Delgado
Subject: RM 236 Cabinet too wide
Spec: 11002 Drawing: LF1-1a
Fax: 925-427-7570
Room: 236 North Wall

REQUEST:
There is a single cabinet and wall shelves between two doorways at the North wall of room 236. There is only 55-1/4" between the doorways. To maintain the 12" clear on each side, this cabinet and shelves needs to be reduced to 30" wide instead of 36"

Fax to: (925)246-6495

SUGGESTION:
Contact contractor

PRIORITY: ASAP
DUE DATE: 12/22/2006
BY: Del Kemper

DATE: 12/15/2006

Response By:
Response Date:
RESPONSE:

BULLETIN 23R

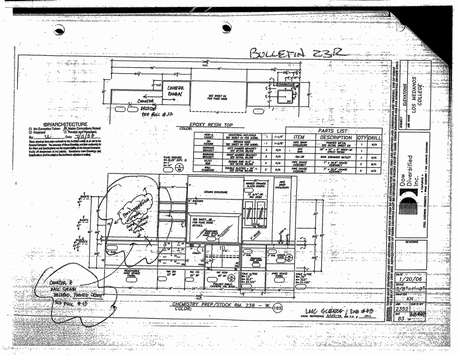

BULLETIN #56
DSA FILE # 7-C1
DSA APPL # 01-106226

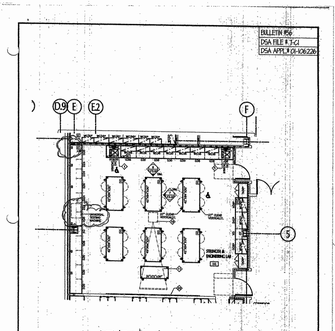

TEXT ON SHEET A1.1

ENLARGED PLANS SECOND FLOOR - PART "A" : CHEMISTRY PREP / STRENGTH & ENGINEERING LAB 245

SCIENCE BUILDING
LOS MEDANOS COLLEGE
Pittsburg Ca.
Contra Costa Community College District
ARCHITECT
tBP/Architecture
1000 Burnett Ave. Suite 140
Concord, CA 94520
p: 925.246.6491 f: 925.246.6495
structural engineering
mechanical electrical engineering
management
LICENSED ARCHITECT
REGISTERED PROFESSIONAL ENGINEER
BULLETIN #56
DATE: 1/16/07
DSA NO: 01-106226
HBS REVIEWS IN PART
SHEET: LF2-1a
SHEET: SKLF-56.3

BULLETIN #56
DSA FILE # 7-C1
DSA APPL # 01-106226

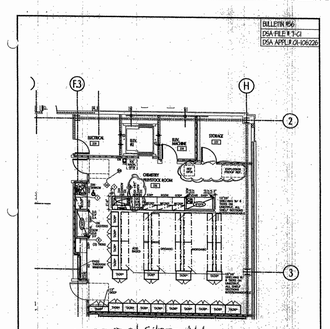

TEXT ON SHEET A1.1

ENLARGED PLANS SECOND FLOOR - PART "A" : CHEMISTRY PREP / STOCK ROOM 236

SCIENCE BUILDING
LOS MEDANOS COLLEGE
Pittsburg Ca.
Contra Costa Community College District
ARCHITECT
tBP/Architecture
1000 Burnett Ave. Suite 140
Concord, CA 94520
p: 925.246.6491 f: 925.246.6495
structural engineering
mechanical electrical engineering
management
LICENSED ARCHITECT
REGISTERED PROFESSIONAL ENGINEER
BULLETIN #56
DATE: 1/16/07
DSA NO: 01-106226
HBS REVIEWS IN PART
SHEET: LF2-1a
SHEET: SKLF-56.4

Los Medanos College
4CD Proj.# : L-565-B-23-SC
Science Building

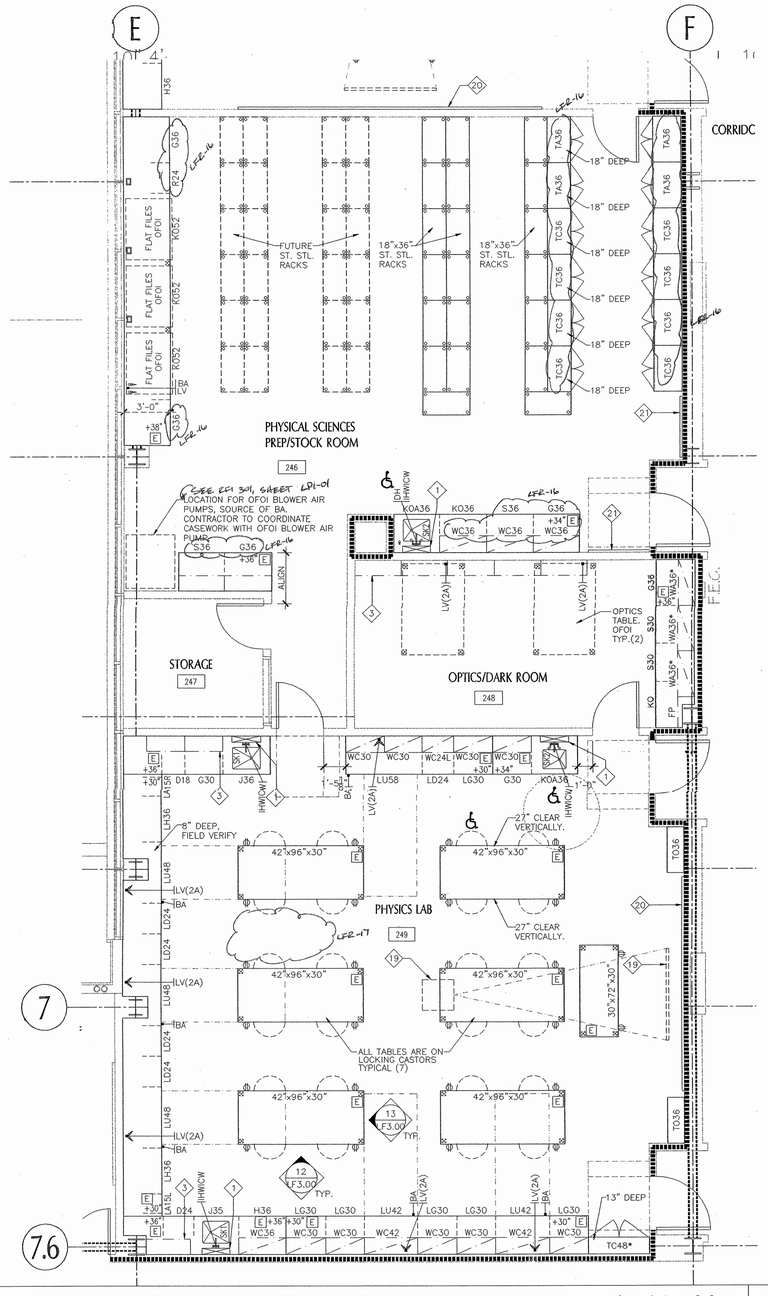

PHYSICS LABORATORY, OPTICS ROOM, AND PHYSICS PREP/ STOCKROOM | 1

SCALE: 1/4"=1'-0"

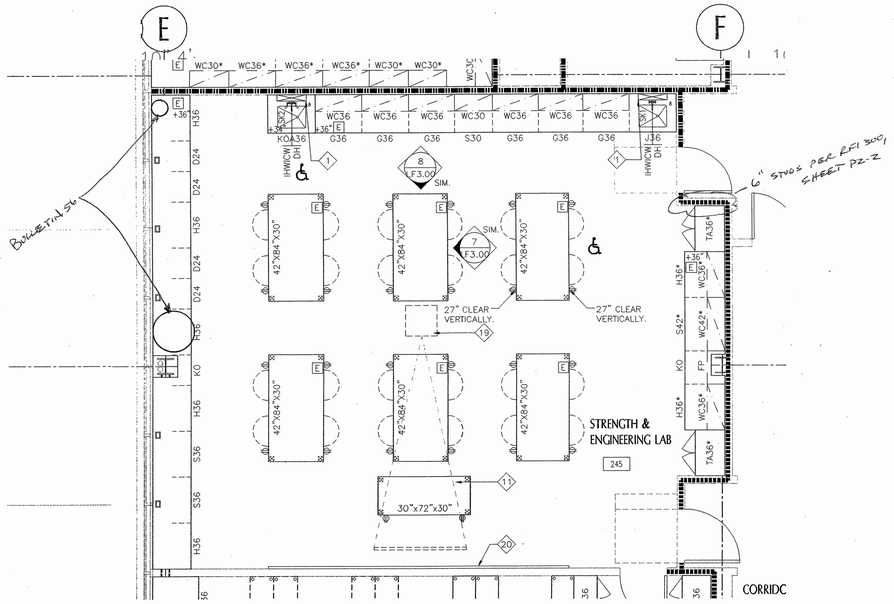

STRENGTH AND ENGINEERING LABORATORY | 2

SCALE: 1/4"=1'-0"

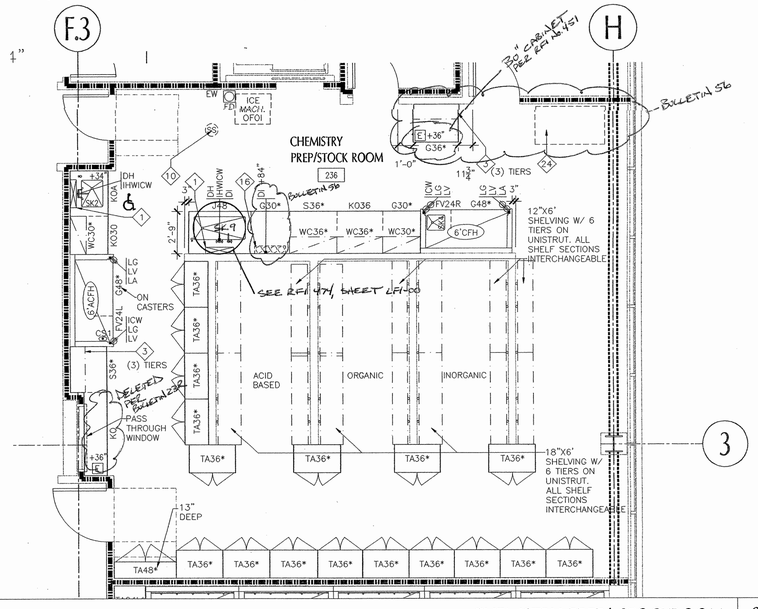

CHEMISTRY PREP/ STOCKROOM | 3

SCALE: 1/4"=1'-0"

KEY PLAN

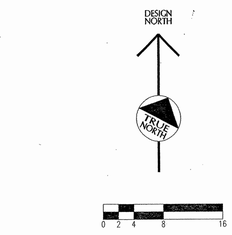

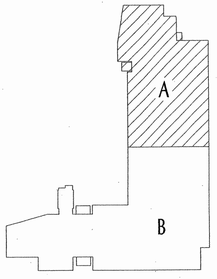

tBP
architecture
planning
interiors
management

tBP/Architecture
1000 Burnett Avenue, Suite 140
Concord, CA 94520
p: 925.246.6419 f: 925.246.6495

RFD
RESEARCH FACILITIES DESIGN
1814 Ashton Avenue, Suite 200
San Diego, California 92071
FAX: 619 294 4269
FAX: 619 294 4269

name
address
city, state, zip
ph: fx:

SCIENCE BUILDING
LOS MEDANOS COLLEGE

Contra Costa Community College District

tBP project number : 20241.00

file name: IST-FLR-PLAN

drawn by: DI checked by: DI

date: NOVEMBER 15, 2004

Rev.	date	description

drawing title:

ENLARGED PLANS
SECOND FLOOR-PART "A"

LMC SCIENCE 313-023-112.01-0-00.00

drawing no:

LF2-1a

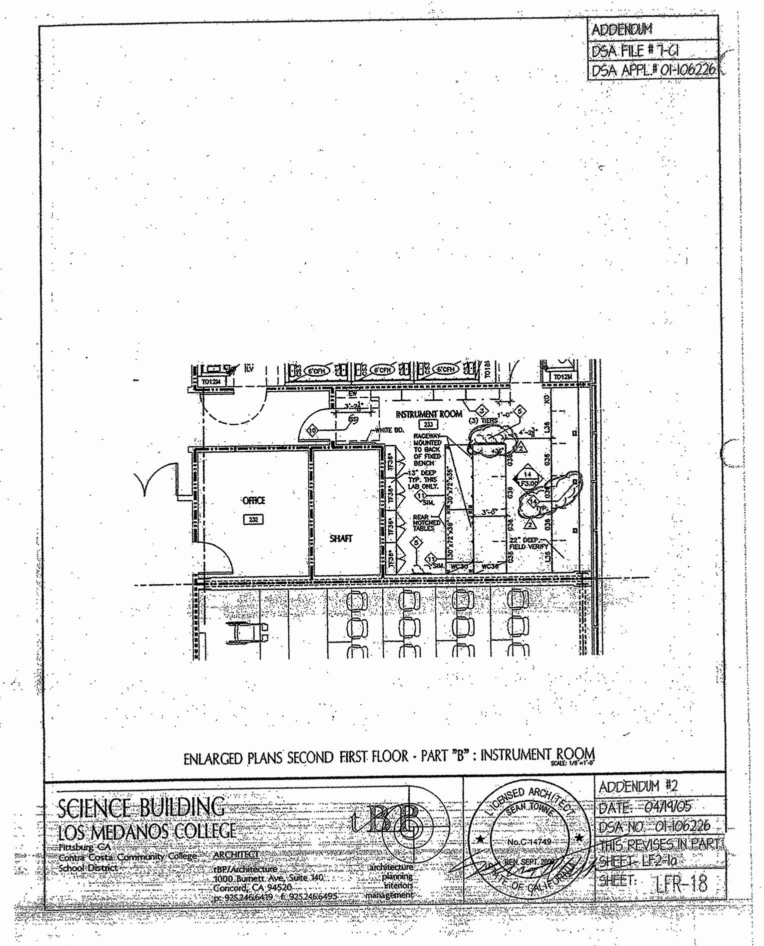

S. J. AMOROSO
Request For Information/Clarification

DSA FILE NO. 7-C1
DSA APPL. No. 01-106226

To: tBP/Architecture, 1000 Burnett Ave, Suite 140, Concord, CA 94520
Project: LOS MEDANOS COLLEGE SCIENCE BUILDING, Contra Costa Community College District
Attn: Celia Chiang, Tom Beckett
Fax: 925-246-6495
tBP p/n: 20247.00
Subj.: Metal Panels in Room 235
RFI No: 443
Reference (dwg, spec.): LF2-1B
Subcontractor RFI: DDI 8
Reply Requested By: 12/21/06

INFORMATION REQUESTED: Date: 12/14/06

Please note the attached Dow Diversified RFI No. 8 regarding the metal cabinet with shelves in Room 235 shown next to the fume hoods on the east, south and west walls. All other cabinets in this room are going to be made of wood and the metal cabinets would look out of place. Dow Diversified suggest that this cabinet be changed to wood. Please advise.

SUGGESTED SOLUTION:
Cost Impact: ☐ Schedule Impact: ☐ days By: Mark Delgado

RESPONSE: DATE: 12/22/06

Intent of the metal cabinets with shelves in Room 235 is to match the metal fume hood. Please keep as metal.

Richard Kate

RFI # 000
Page 1

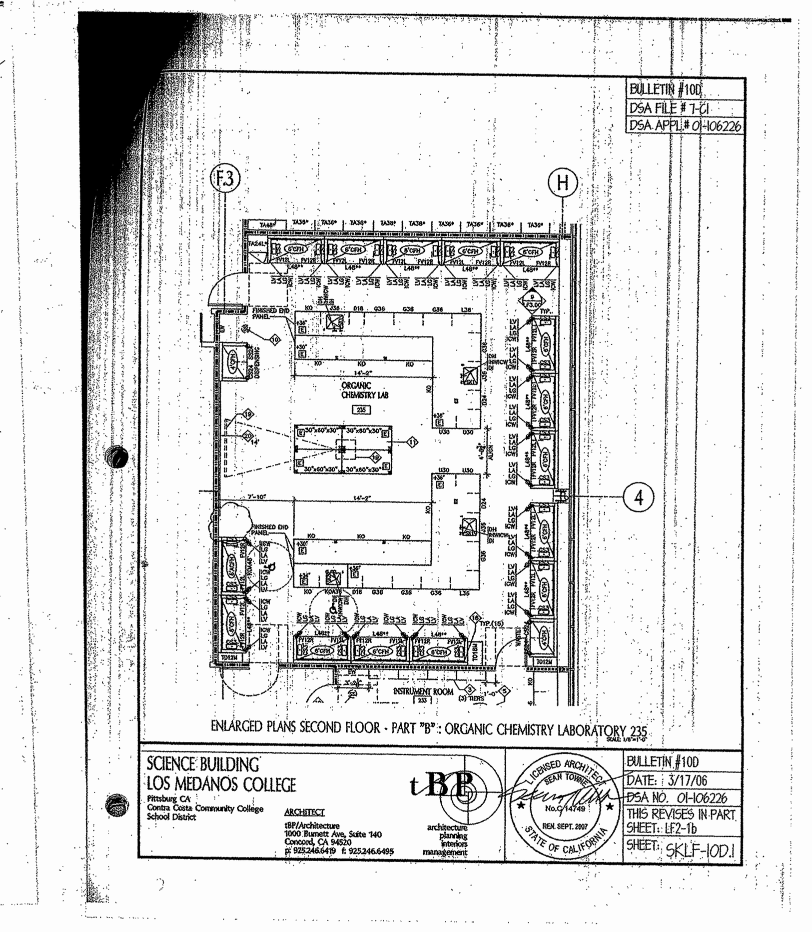

S. J. AMOROSO
Request For Information/Clarification

DSA FILE NO. 7-C1
DSA APPL. No. 01-106226

To: tBP/Architecture, 1000 Burnett Ave, Suite 140, Concord, CA 94520
Project: LOS MEDANOS COLLEGE SCIENCE BUILDING, Contra Costa Community College District
Attn: Celia Chiang, Tom Beckett
Fax: 925-246-6495
tBP p/n: 20247.00
Subj.: Dimension to locate casework in room 233
RFI No: 251
Reference (dwg, spec.): LF2-1b
Subcontractor RFI:
Reply Requested By: 6/21/06

INFORMATION REQUESTED: Date: 6/19/06

Please provide a dimension either from gird line or door jamb to locate the casework along the eastern (exterior) wall of this room.
There is a brace frame behind the casework and there is a nearby door in the north wall with a dimension of 3'-6" from H-line to hinge-side jamb per sheet A1-4.
This information is needed to locate electrical rough-in in both this casework and the peninsula casework which is dimensioned off of this casework.
Please advise.

SUGGESTED SOLUTION:
Cost Impact: ☐ Schedule Impact: ☐ days By: Mark Delgado

RESPONSE: DATE:

See attached sketch for the following changes: Relocate east wall bench against exterior wall. The 'KO', 'G', and 'L' base cabinet at the north end of wall bench to be adjusted to accommodate the brace frame. The peninsula bench/tables at the center of room to be relocated equally spaced between the perimeter wall bench on east wall and tall storage cabinets on west wall.
Richard H. Cate/RFD

Attachments: Sketch: SKL-251.1 By: 6/21/06

TRANSMITTAL RECORD:

FROM	TO		DATE
S.J. AMOROSO	tBP / ARCHITECTURE		6/14/06
tBP / ARCHITECTURE	ENGINEER/CONSULTANT	tBP-RFD	6/19/06
ENGINEER/CONSULTANT	tBP / ARCHITECTURE	RFD-tBP	6/21/06
tBP / ARCHITECTURE	S.J. AMOROSO		6/21/06
S.J. AMOROSO	ORIGINATOR		

Contractor to coordinate the revision of cabinets/countertop of submittal #43.
See attached additional comments to sheet 117 of submittal #43. Vanessa Ling/tBP 6/21/06

CC: EW Scott
Dow Diversified

RFI # 000
Page 1

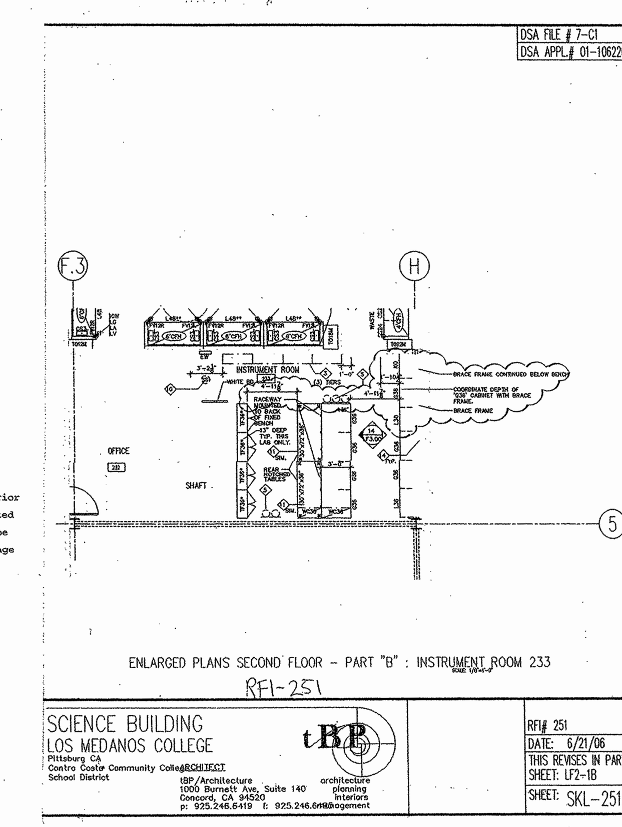

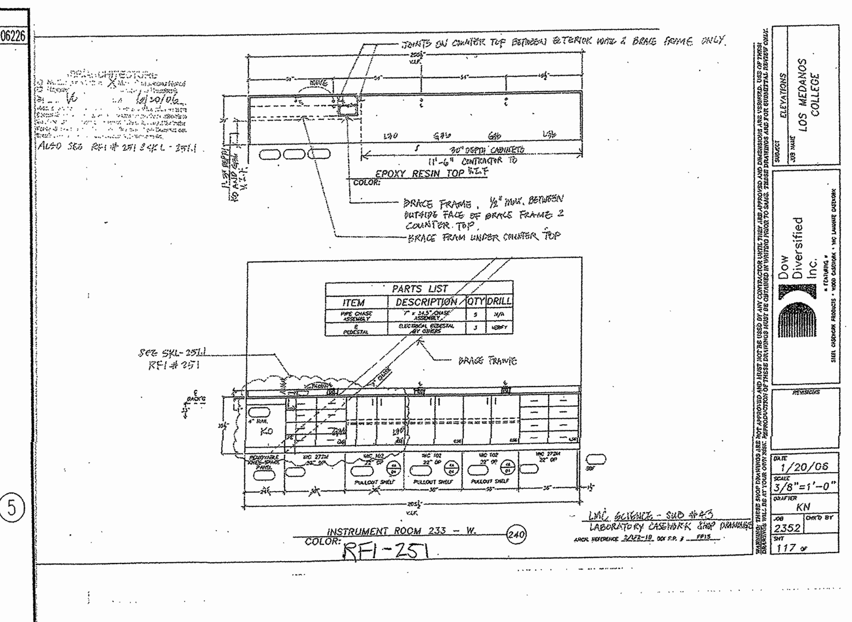

S. J. AMOROSO
Request For Information/Clarification

DSA FILE NO. 7-C1
DSA APPL. No. 01-106226

To: tBP/Architecture, 1000 Burnett Ave, Suite 140, Concord, CA 94520
Project: LOS MEDANOS COLLEGE SCIENCE BUILDING, Contra Costa Community College District
Attn: Celia Chiang, Tom Beckett
Fax: 925-246-6495
tBP p/n: 20247.00
Subj.: Fume hood anchorage west wall of room 235
RFI No: 413
Reference (dwg, spec.): 2/LF2-1B, LF-4.0
Subcontractor RFI: DDI 5
Reply Requested By: 11/3/06

INFORMATION REQUESTED: Date: 10/27/06

The fume hoods are supposed to anchor to the wall that they rest against. However, in the case of the east wall in room 235, there are brace frames and windows along that wall. This means that there is no way to anchor the fume hoods to the wall. Please advise.

SUGGESTED SOLUTION:
Cost Impact: ☐ Schedule Impact: ☐ days By: Mark Delgado

RESPONSE: DATE:

Refer to the wall section 4/A6-1 in Contract Document for +/- 8'H wall behind the fume hood, top of wall align to top of the window mullion as indicated in the wall section. Fume hoods along the east wall of this room shall brace to this wall.

Vanessa Ling/tBP - 11/3/06

RFI # 000
Page 1

Dow Diversified, Inc. — REQUEST FOR INFORMATION
Los Medanos College Science Building, 2352K

Proj RFI#:
DDI Ref#: 5

To: Mark Delgado **Fax:** 925-427-7570
Subject: Fume Hood Anchorage
Spec: 11601 **Drawings:** 2/LF2-1B, LF-4.0, & DDI 223/105 **Room:** 235 East

REQUEST:
The fume hoods are supposed to anchor to the wall that they rest against. However, in the case of the East wall in room 235 there are brace frames and windows along that wall. This means that there is no way to anchor the fume hoods to a wall. Basically the fume hoods will be free standing with only anchorage at the floor.

Please provide a detail on how the fume hoods should be anchored at this location.

SUGGESTION:
DDI suggests that a Unistrut frame should be built anchoring to the floor and the ceiling. The fume hoods would then be anchored to the Unistrut frame.

There is a cost and time impact for additional anchorage in this situation. DDI can provide pricing and a drawing of the frame if you would like to pursue this option.

PRIORITY: ASAP
DUE DATE: 11/3/2006
BY: Ben Kemper **DATE:** 10/26/2006

Response By:
Response Date:
RESPONSE:

S. J. AMOROSO
Request For Information/Clarification

DSA FILE NO. 7-C1
DSA APPL. No. 01-106226

To: tBP/Architecture, 1000 Burnett Ave, Suite 140, Concord, CA 94520
Project: LOS MEDANOS COLLEGE SCIENCE BUILDING, Contra Costa Community College District
Attn: Celia Chiang, Tom Beckett
Fax: 925-246-6495
tBP p/n: 20247.00
Subj.: Fume hood anchorage west wall of room 235
RFI No: 413.1
Reference (dwg, spec.): 2/LF2-1B, LF-4.0
Subcontractor RFI: DDI 5
Reply Requested By: 11/3/06

INFORMATION REQUESTED: Date: 10/27/06

Text of original RFI 413:
The fume hoods are supposed to anchor to the wall that they rest against. However, in the case of the east wall in room 235, there are brace frames and windows along that wall. This means that there is no way to anchor the fume hoods to the wall. Please advise.

New RFI 413.1:
Per response to RFI 413 we are to construct an approximately 8 foot tall wall per 4/A6-1. However, 4/A6-1 shows a full height wall, not an 8 foot tall wall. In addition, and 8 foot tall wall with fume hoods attached near the top would simply be a cantilevered wall with a large load at the top, which seems unstable. Please provide framing details for this wall. Also, please clarify if this wall is the full length of the room or provide dimensions as needed.
Also, if this wall is to tie into the northern partition wall of this room, it will cause physical conflict with the fume hood on this wall.

SUGGESTED SOLUTION:
Cost Impact: ☐ Schedule Impact: ☐ days By: Mark Delgado

RESPONSE: DATE:

Please see the following response items:
1. The second floor condition per 4/A6-1 indicates an approx 8' wall that aligns with the top of mullion at exterior window.
2. Per details 2,3 & 6/LF4.04 the fume hoods have been shown to anchor to the base cabinets and base cabinets anchored to the floor. These connections are the primary gravity and seismic anchor points. Wall anchorages to be provided as secondary measures. Please coordinate with DDI and current fume hood submittals.
3. The east side 8' wall shown detail 4/A6-1 and 4/4.05 is to continue full length of room. Inside face of stud flushes with inside face of brace frame, therefore do not see conflict with fume hood at north side per LF2-1b.

Jim Weaver / tBP Architecture
R. C. / RFD
C. N. / Dasse

11/22/06

RFI # 000
Page 1

S. J. AMOROSO
Request For Information/Clarification

DSA FILE NO. 7-C1
DSA APPL. No. 01-106226

To: tBP/Architecture, 1000 Burnett Ave, Suite 140, Concord, CA 94520
Project: LOS MEDANOS COLLEGE SCIENCE BUILDING, Contra Costa Community College District
Attn: Celia Chiang, Tom Beckett
Fax: 925-246-6495
tBP p/n: 20247.00
Subj.: Conflict between lab sink and brace frame
RFI No: 414
Reference (dwg, spec.): 1/LF2-1B,
Subcontractor RFI: DDI 6
Reply Requested By: 11/3/06

INFORMATION REQUESTED: Date: 10/27/06

There is a sink on the west wall in room 242 that falls directly in front of the middle of a brace frame. Since the frame is in the way, the plumbing is currently rough-in in front of the brace frame. Because of the location, the plumbing is pushed out to the point that it will actually be outside the cabinet. In addition, the brace frame will run directly through the middle of the sink. Please advise.

SUGGESTED SOLUTION:
Cost Impact: ☐ Schedule Impact: ☐ days By: Mark Delgado

RESPONSE: DATE:

See attached sketch LSK-414.1 for relocation of sink and sink cabinet at west wall room 242.

Jim Weaver / tBP Architecture
Richard Cate / RFD

11/22/06

RFI # 000
Page 1

Dow Diversified, Inc. — REQUEST FOR INFORMATION
Los Medanos College Science Building, 2352K

Proj RFI#:
DDI Ref#: 6

To: Mark Delgado **Fax:** 925-427-7570
Subject: Sink/Brace Frame Conflict
Spec: 11602 **Drawings:** 1/LF2-1B & DDI 211/95 **Room:** 242 West

REQUEST:
There is a sink at the west wall in room 242 that falls directly in front of the middle of a brace frame. Since the frame is in the way the plumbing is currently roughed-in in front of the brace frame. Because of the location, the plumbing is pushed out to the point that it will actually sit outside of the cabinet. In addition, the brace frames will run directly through the middle of the sink.

Please provide direction as the sink cannot be installed at this location.

SUGGESTION:
DDI recommends moving the sink cabinet to the left to somewhere between the column on the left and the brace frame on the right.

The cost and time impact is not yet known.

PRIORITY: ASAP
DUE DATE: 11/3/2006
BY: Ben Kemper **DATE:** 10/26/2006

Response By:
Response Date:
RESPONSE:

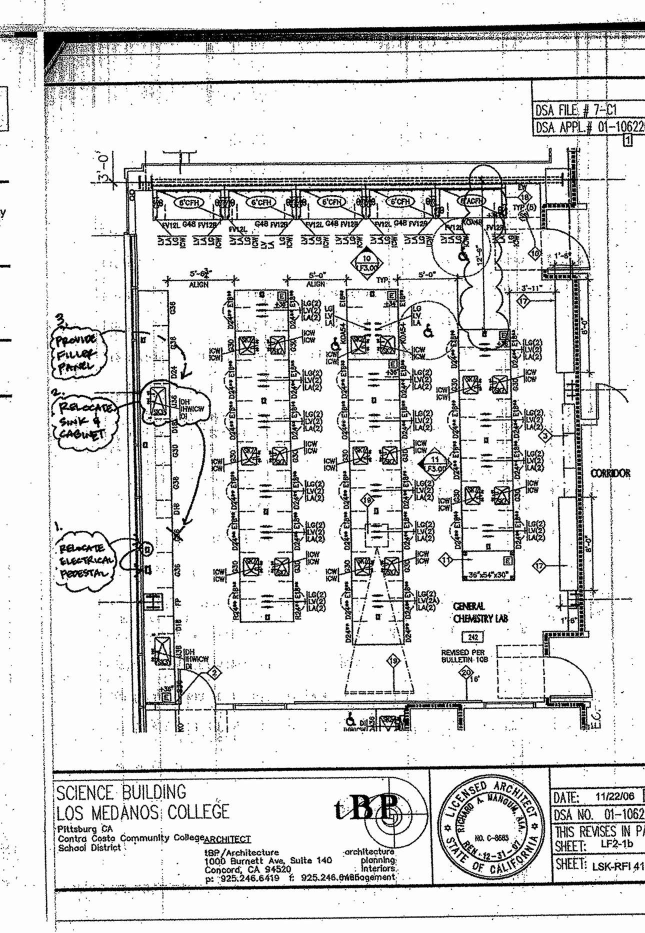

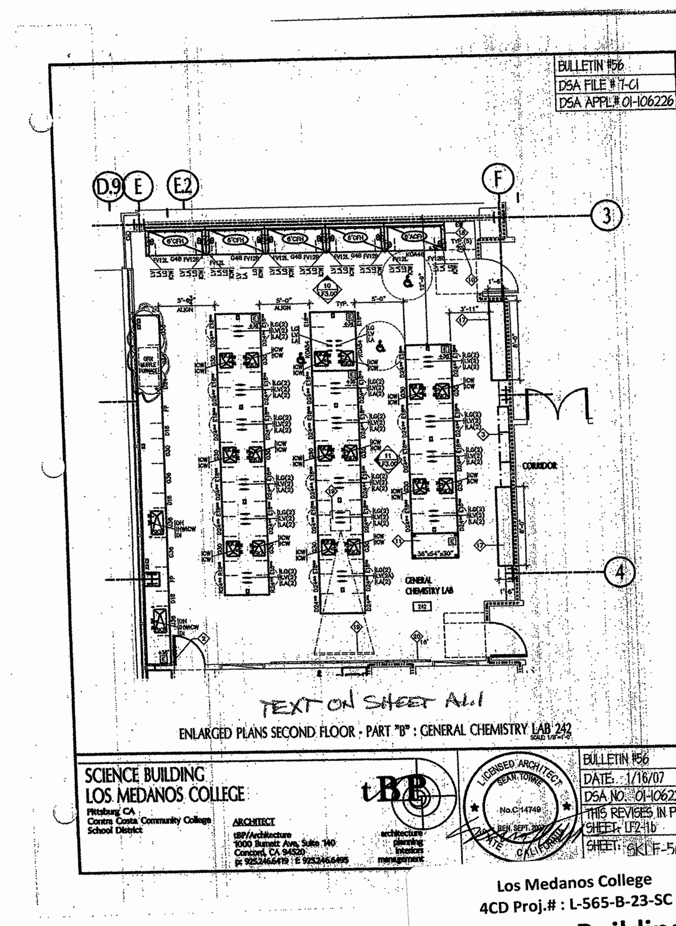

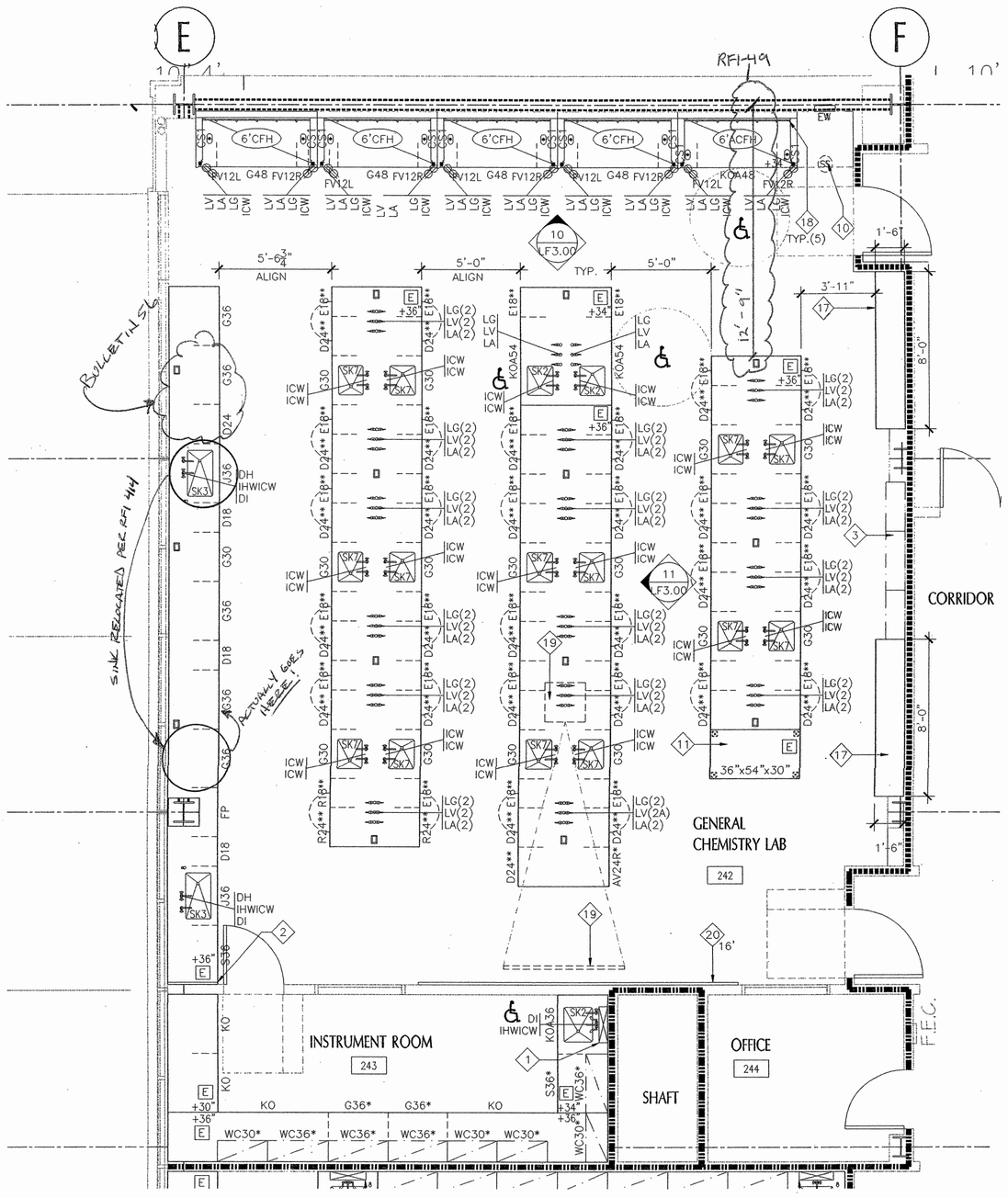

GENERAL CHEMISTRY LABORATORY AND INSTRUMENT ROOM
SCALE: 1/4"=1'-0"
1

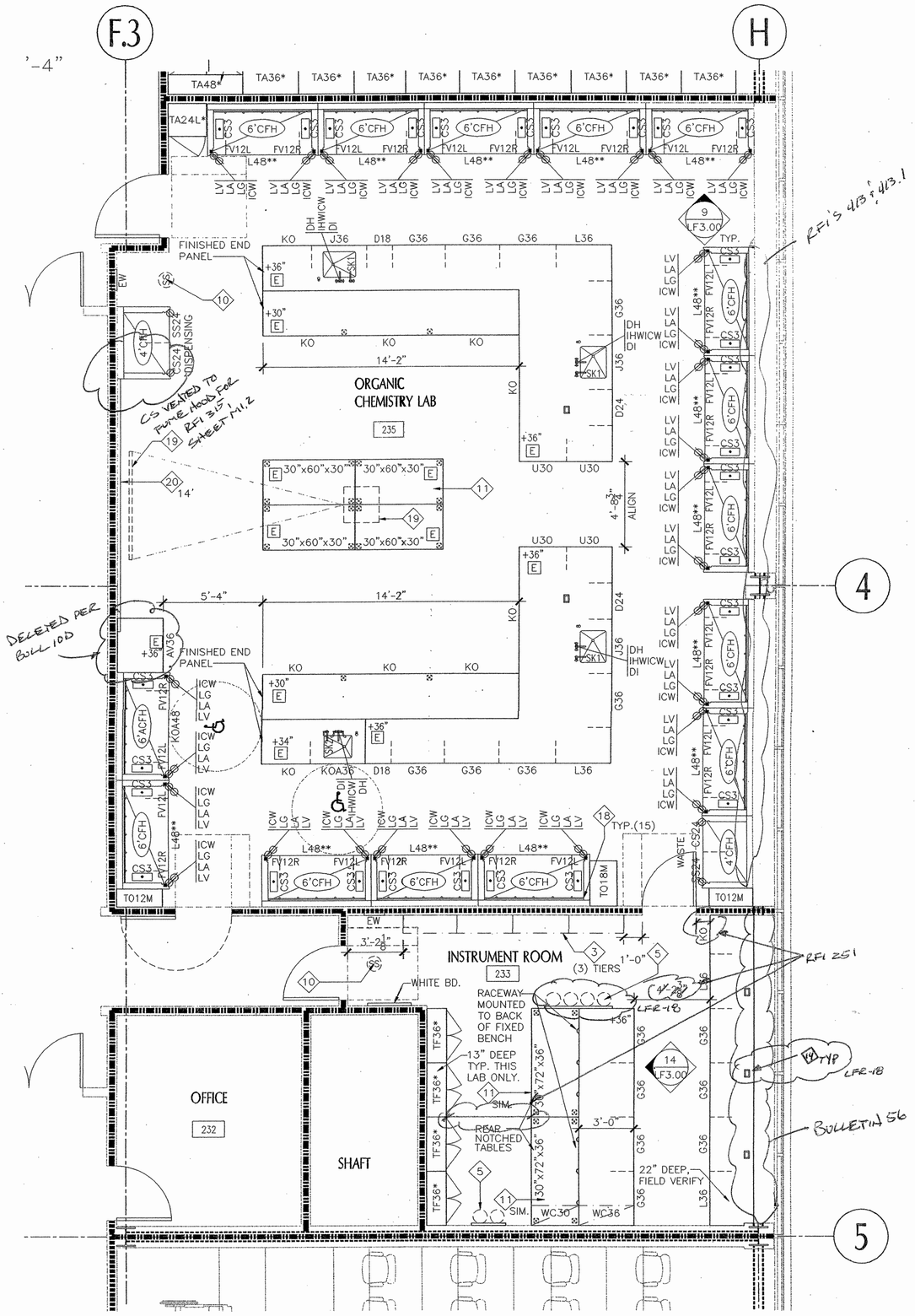

ORGANIC CHEMISTRY LABORATORY AND INSTRUMENT ROOM
SCALE: 1/4"=1'-0"
2

KEY PLAN

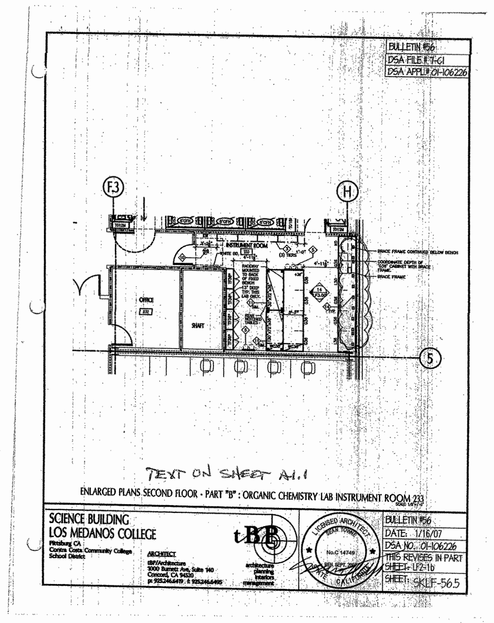

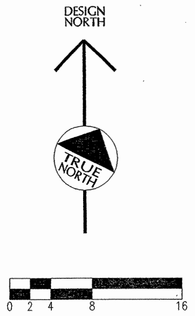

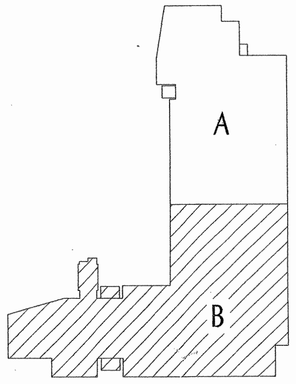

tBP
architecture
planning
interiors
management

tBP/Architecture
1000 Burnett Avenue, Suite 140
Concord, CA 94520
p: 925.246.6419 f: 925.246.6495

LICENSED ARCHITECT
R. Cassidy
No. C-18855
STATE OF CALIFORNIA

LICENSED ARCHITECT
STEPHEN E. TOWNE
No. C14769
REN. 9/05
STATE OF CALIFORNIA

RESEARCH FACILITIES DESIGN
3946 Fifth Avenue, Suite 300
San Diego, California 92103
TEL: 619 - 297 0769
FAX: 619 - 294 4801
RFD

IDENTIFICATION STAMP
DIVI. OF THE STATE ARCHITECT
FOR CONSTRUCTION PURPOSES
APR - 10 2007
APPROVED
DATE 1-16-07

name
address
city, state, zip
phone fax

SCIENCE BUILDING
LOS MEDANOS COLLEGE

Contra Costa Community College District

tBP project number : 20241.00
file name: 1ST-FLR-PLAN
drawn by: DI checked by: DI
date: NOVEMBER 15, 2004

Rev.	date:	description:

drawing title:
ENLARGED PLANS
SECOND FLOOR-PART "B"

LMC SCIENCE 313-023-T12.01-0-00.00
drawing no:
LF2-1b

ADDENDUM
DSA FILE # 1-G
DSA APPL # 01-106226

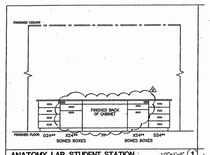

ANATOMY LAB STUDENT STATION 1/2"=1'-0" (1)

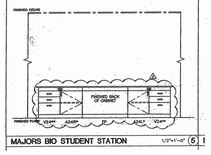

MAJORS BIO STUDENT STATION 1/2"=1'-0" (5)

ELEVATION : ELEVATION #1 & #5

SCIENCE BUILDING
LOS MEDANOS COLLEGE
Pittsburg, CA
Contra Costa Community College District

ARCHITECT
BFA Architecture
1000 Burnett Ave, Suite 160
Concord, CA 94520
p: 925.246.6491 f: 925.246.6493

architectural
planning
interiors
management

LICENSED ARCHITECT
DEAN TOMITCH
No. 14749
Date Signed 4/8/05
STATE OF CALIFORNIA

ADDENDUM #2
DATE: 04/08/05
DSA NO. 01-106226
THIS REVISES IN PART
SHEET: LFR-00
SHEET: LFR-19

ADDENDUM
DSA FILE # 1-G
DSA APPL # 01-106226

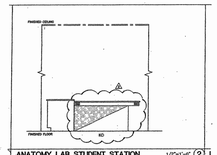

ANATOMY LAB STUDENT STATION 1/2"=1'-0" (2)

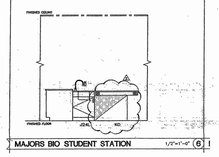

MAJORS BIO STUDENT STATION 1/2"=1'-0" (6)

ELEVATION : ELEVATION #2 & #6

SCIENCE BUILDING
LOS MEDANOS COLLEGE
Pittsburg, CA
Contra Costa Community College District

ARCHITECT
BFA Architecture
1000 Burnett Ave, Suite 160
Concord, CA 94520
p: 925.246.6491 f: 925.246.6493

architectural
planning
interiors
management

LICENSED ARCHITECT
DEAN TOMITCH
No. 14749
Date Signed 4/8/05
STATE OF CALIFORNIA

ADDENDUM #2
DATE: 04/08/05
DSA NO. 01-106226
THIS REVISES IN PART
SHEET: LFR-00
SHEET: LFR-20

ADDENDUM
DSA FILE # 1-G
DSA APPL # 01-106226

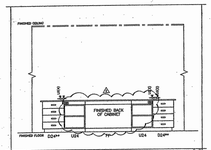

MICRO BIO LAB STUDENT STATION 1/2"=1'-0" (3)

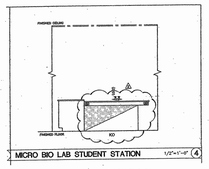

MICRO BIO LAB STUDENT STATION 1/2"=1'-0" (4)

ELEVATION : ELEVATION #3 & #4

SCIENCE BUILDING
LOS MEDANOS COLLEGE
Pittsburg, CA
Contra Costa Community College District

ARCHITECT
BFA Architecture
1000 Burnett Ave, Suite 160
Concord, CA 94520
p: 925.246.6491 f: 925.246.6493

architectural
planning
interiors
management

LICENSED ARCHITECT
DEAN TOMITCH
No. 14749
Date Signed 4/8/05
STATE OF CALIFORNIA

ADDENDUM #2
DATE: 04/08/05
DSA NO. 01-106226
THIS REVISES IN PART
SHEET: LFR-00
SHEET: LFR-21

ADDENDUM
DSA FILE # 1-G
DSA APPL # 01-106226

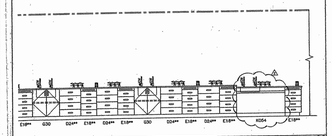

STATION 1/2"=1'-0" (11)

ELEVATION : ELEVATION #11

SCIENCE BUILDING
LOS MEDANOS COLLEGE
Pittsburg, CA
Contra Costa Community College District

ARCHITECT
BFA Architecture
1000 Burnett Ave, Suite 160
Concord, CA 94520
p: 925.246.6491 f: 925.246.6493

architectural
planning
interiors
management

LICENSED ARCHITECT
DEAN TOMITCH
No. 14749
Date Signed 4/8/05
STATE OF CALIFORNIA

ADDENDUM #2
DATE: 04/08/05
DSA NO. 01-106226
THIS REVISES IN PART
SHEET: LFR-00
SHEET: LFR-22

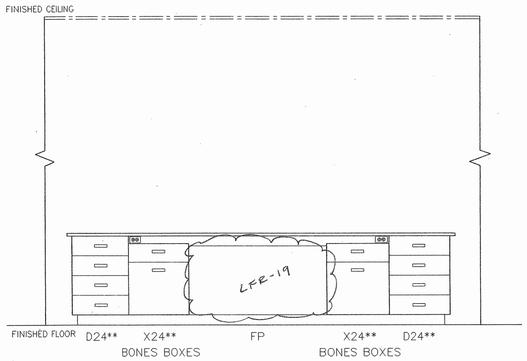

ANATOMY LAB STUDENT STATION 1/2"=1'-0" (1)

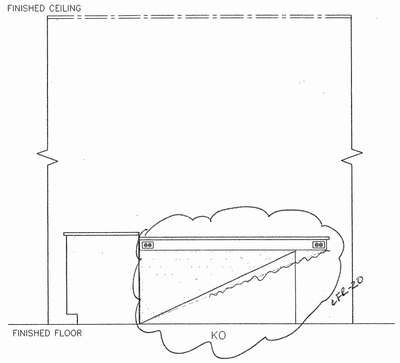

ANATOMY LAB STUDENT STATION 1/2"=1'-0" (2)

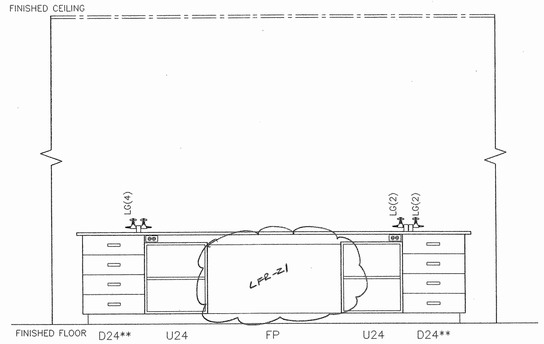

MICRO BIO LAB STUDENT STATION 1/2"=1'-0" (3)

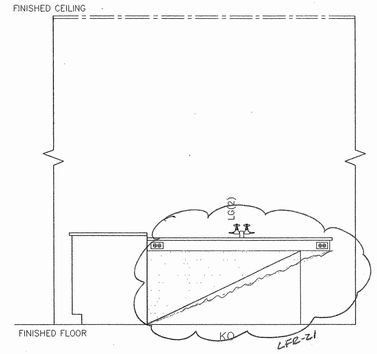

MICRO BIO LAB STUDENT STATION 1/2"=1'-0" (4)

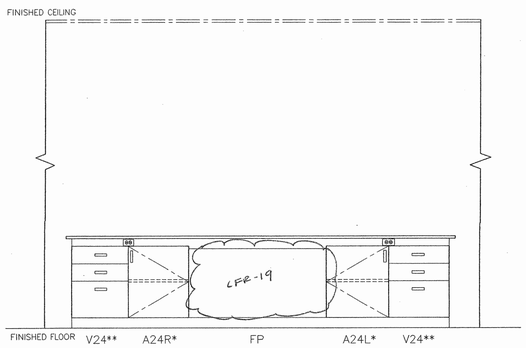

MAJORS BIO STUDENT STATION 1/2"=1'-0" (5)

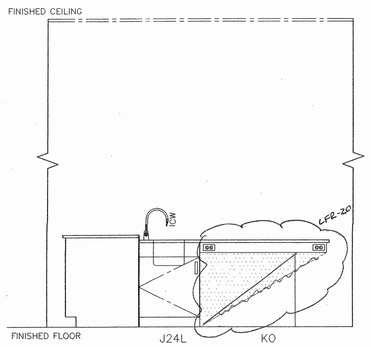

MAJORS BIO STUDENT STATION 1/2"=1'-0" (6)

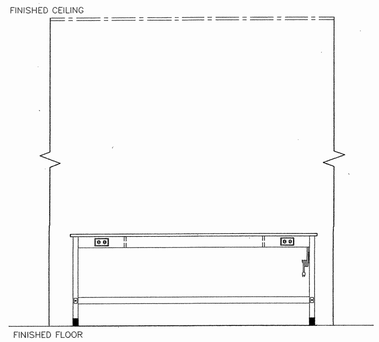

BIOLOGY LAB STUDENT STATION 1/2"=1'-0" (7)

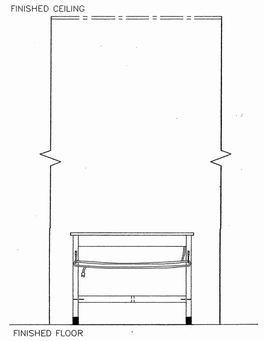

BIOLOGY LAB STUDENT STATION 1/2"=1'-0" (8)

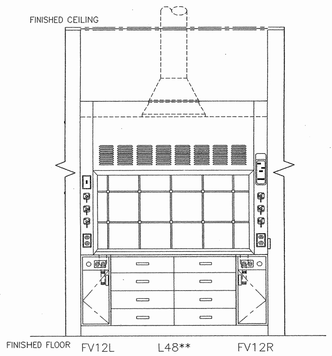

O-CHEM STUDENT STATION 1/2"=1'-0" (9)

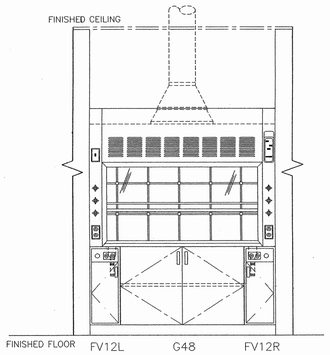

GEN CHEM STUDENT STATION 1/2"=1'-0" (10)

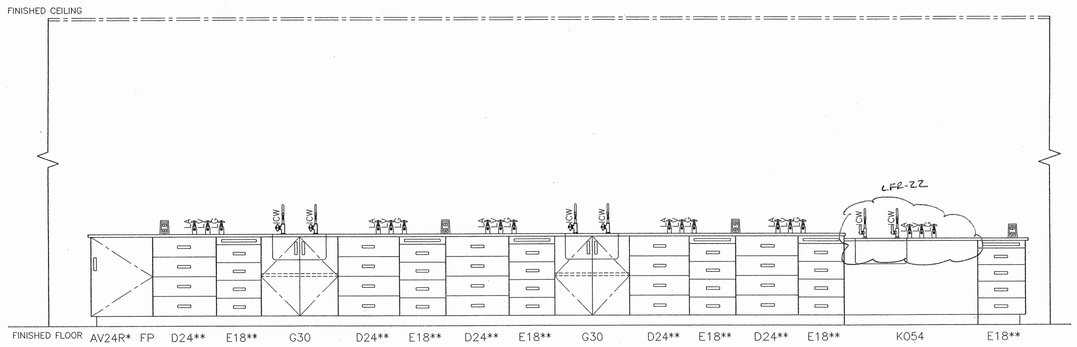

GEN CHEM STUDENT STATION 1/2"=1'-0" (11)

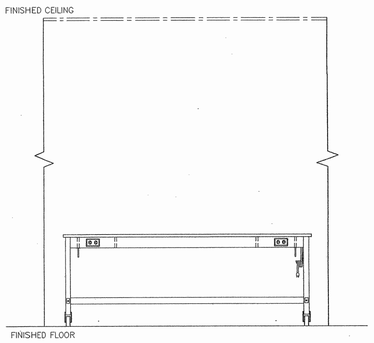

PHYSICS STUDENT STATION 1/2"=1'-0" (12)

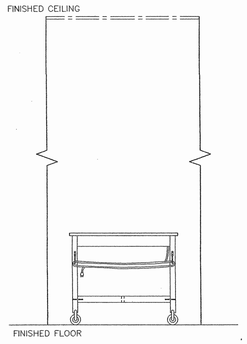

PHYSICS STUDENT STATION 1/2"=1'-0" (13)

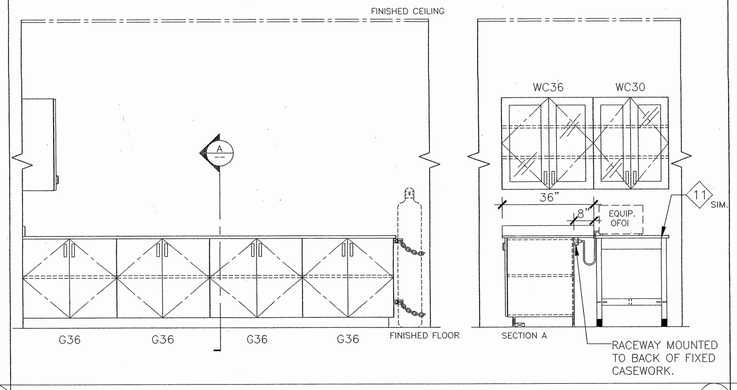

INSTRUMENT ROOM BENCH 1/2"=1'-0" (14)

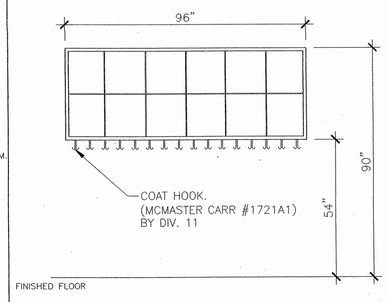

BACK PACK STORAGE 1/2"=1'-0" (15)

tBP
architecture
planning
interiors
management

tBP/Architecture
1000 Burnett Avenue, Suite 140
Concord, CA 94520
p: 925.246.6419 f: 925.246.6495

RFD
RESEARCH FACILITIES DESIGN
1000 Burnett Avenue, Suite 100
San Diego, California 92092
TEL 619 294 4900
FAX 619 294 4909

LICENSED ARCHITECT
STEVEN E. TOWNE
No. C 14749
REN. 12/05
STATE OF CALIFORNIA

DIV. OF ARCHITECTURAL STANDARDS
OFFICE OF REGULATION SERVICES
APPL - 01-106025
DATE 1-7-05

name
address
city, state, zip
ph: fx

SCIENCE BUILDING
LOS MEDANOS COLLEGE

Contra Costa Community College District

tBP project number : 20241.00
file name: ELEVATIONS
drawn by: DI checked by: DI
date: NOVEMBER 15, 2004

Rev	date	description

drawing title:
ELEVATIONS

LMC SCIENCE 313-023-112.01-0-00.00
drawing no:
LF3.00

ADDENDUM
DSA FILE # 7-C1
DSA APPL # 01-106226

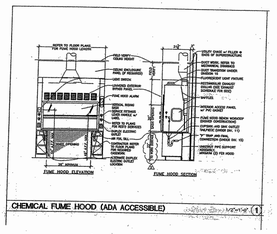

CHEMICAL FUME HOOD (ADA ACCESSIBLE) 1

LABORATORY FURNISHINGS DETAILS DETAIL #1

SCIENCE BUILDING
LOS MEDANOS COLLEGE
Pittsburg CA
Contra Costa Community College District
ARCHITECT
BBI Architecture
3000 Burnett Ave, Suite 140
Concord, CA 94520
p: 925.686.6400 f: 925.686.6495
planning
architecture
management

ADDENDUM #2
DATE: 04/06/05
DSA NO: 01-106226
THIS REVISES IN PART:
SHEET: LF4.00
SHEET: LFR-23

ADDENDUM
DSA FILE # 7-C1
DSA APPL # 01-106226

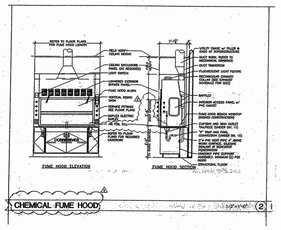

CHEMICAL FUME HOOD 2

LABORATORY FURNISHINGS DETAILS DETAIL #2

SCIENCE BUILDING
LOS MEDANOS COLLEGE
Pittsburg CA
Contra Costa Community College District
ARCHITECT
BBI Architecture
3000 Burnett Ave, Suite 140
Concord, CA 94520
p: 925.686.6400 f: 925.686.6495
planning
architecture
management

ADDENDUM #2
DATE: 04/06/05
DSA NO: 01-106226
THIS REVISES IN PART:
SHEET: LF4.00
SHEET: LFR-24

RECEIVED
OCT 0 9 2006
TBP/CONCORD

S. J. AMOROSO
Request For Information/Clarification

DSA FILE NO. 7-C1
DSA APPL. No. 01-106226

To: BBI Architecture
3000 Burnett Ave, Suite 140
Concord, CA 94520

Attn: Celia Chiang, Tom Beckett
Fax: 925-246-6495

Subj.: Light fixtures & switch height at ADA fume hoods
Reference (dwg. spec.): DOI drawings H14 and H9 (subsoffer 41)

Project: LOS MEDANOS COLLEGE SCIENCE BUILDING
Contra Costa Community College District

BBI pln: 20247.00

RFI No: **373**
Subcontractor RFI: Door 3

Reply Requested By: 10/13/06

INFORMATION REQUESTED: Date: 10/06 TBP RECEIVED 10/9/06

See attached DOI RFI No. 3 to which they address the placement of light fixtures in the ADA fume hoods. With (4) services on each side it is physically not possible to bring the light switch low enough to be within the 54" needed for ADA.

Either one service can be removed on the light switch can be approved for installation above the 54" height. Please advise.

SUGGESTED SOLUTION:
Cost Impact: ☐ Schedule Impact: ☐ days By: Mark Delgado

RESPONSE: DATE:

Please find response to RFI #373: At the ADA Hood with (4) services, combine light switch with single receptacle on left side (see attached sketch REL373.1).

Richard R. Cate/RFD - 10/10/06

RFI # 000
Page 1

Dover Diversified, Inc.

REQUEST FOR INFORMATION
Los Medanos College Science Building, 2362K

Proj NO#:
DDI Refl#: 3

To: Mark Delgado
Fax: 925-427-7570
Subject: Fume Hood Fixture Placement
Spec: 11601
Drawings: DOI Drawings H14 & H9
Room: Varries

REQUEST:
The fume hood manufacturer has contacted me regarding the placement of the fixtures in the ADA fume hoods. With (4) services on each side it is physically not possible to bring the light switch low enough to be within the 54" needed for ADA.

SUGGESTION:
DOI suggests either remove one service so that the light switch can be lowered or approve installing the light switch above 54".

PRIORITY: ASAP
DUE DATE: 10/13/2006
BY: Dan Kemper
DATE: 10/6/2006

Response By:
Response Date:
RESPONSE:

DSA FILE # 7-C1
DSA APPL # 01-106226

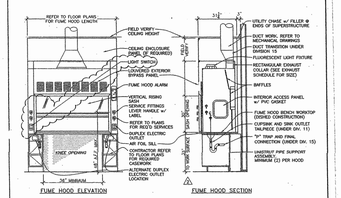

SCIENCE BUILDING
LOS MEDANOS COLLEGE
Pittsburg CA
Contra Costa Community College District
ARCHITECT
BBI Architecture
3000 Burnett Ave, Suite 140
Concord, CA 94520
p: 925.686.6400 f: 925.686.6495
planning
architecture
management

RFI# 373
DATE: 10/10/06
THIS REVISES IN PART:
SHEET: LF4.00
SHEET: SKL3731

S. J. AMOROSO
Request For Information/Clarification

DSA FILE NO. 7-C1
DSA APPL. No. 01-106226

To: BBI Architecture
1000 Burnett Ave, Suite 140
Concord, CA 94520

Attn: Celia Chiang; Tom Beckett
Fax: 925-246-6495

Subj.: Casework Anchorage
Reference (dwg. spec.): LF1-02, 6&8; LF4.00; LF4.03

Project: LOS MEDANOS COLLEGE SCIENCE BUILDING
Contra Costa Community College District

BBI pln: 20247.00

RFI No: **445**
Subcontractor RFI: DOI 9

Reply Requested By: 12/26/06

INFORMATION REQUESTED: Date: 12/16/06

Please note the attached Dow Diversified RFI No. 9 regarding casework anchorage details. Page LF1-02 refers to details 4 and 5 on LF 4.03 for anchorage; however there is another detail on LF4.00. Please advise as to which detail to use.

SUGGESTED SOLUTION:
Cost Impact: ☐ Schedule Impact: ☐ days By: Mark Delgado

RESPONSE: DATE: 12/27/06

Please use Details 4 & 5 on LF4.03 for anchorage.

Richard Cate

RFI # 000
Page 1

Dover Diversified, Inc.

REQUEST FOR INFORMATION
Los Medanos College Science Building, 2362K

Proj NO#:
DDI Refl#: 9

To: Mark Delgado
Fax: 925-427-7570
Subject: Casework Anchorage
Spec: 11602
Drawings: LF1-02, 6 & 8;LF4.00, 4;LF4.03
Room: All

REQUEST:
There appears to be an anchorage detail conflict. LF1-02 (Backing Heights and Anchorage) refers to details 4 & 5 on LF4.03 for anchorage. However, there is another detail on LF4.00.

It appears that the main difference is one shows a Unistrut assembly behind the casework with no anchorage at the toe kicks. The other detail on LF4.03 shows overlapping angles behind the casework with anchorage at the toe kicks also.

Is one detail meant for the casework at the fume hoods and the other meant for the regular casework?

Which detail should we use?

If the detail on LF4.00 is chosen, does that mean that no toe kick anchorage is required?

SUGGESTION:
DOI would like to suggest that we use the anchorage detail on LF4.03. The overlapping angles provide adequate anchorage at the top while also allowing for horizontal adjustments in the field.

The detail on LF4.03 is also very close to what DOI normally does. We can and certainly have used the detail on LF4.00 but would prefer to stick with our typical installation if possible.

PRIORITY: ASAP
DUE DATE: 12/22/2006
BY: Ben Kemper
DATE: 12/16/2006

Response By:
Response Date:
RESPONSE:

Los Medanos College
4CD Proj.# : L-565-B-23-SC
Science Building

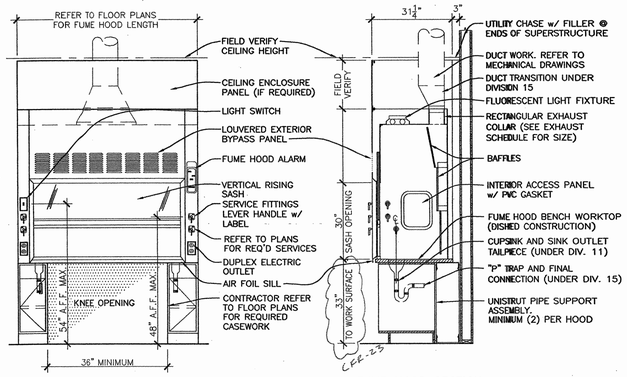

FUME HOOD ELEVATION

FUME HOOD SECTION

CHEMICAL FUME HOOD (ADA ACCESSIBLE) 1/2"=1'-0" (1)

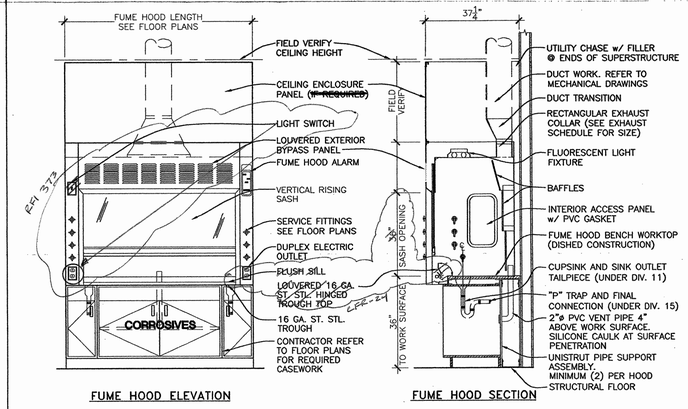

FUME HOOD ELEVATION

FUME HOOD SECTION

FLUSH SILL CHEMICAL FUME HOOD 1/2"=1'-0" (2)

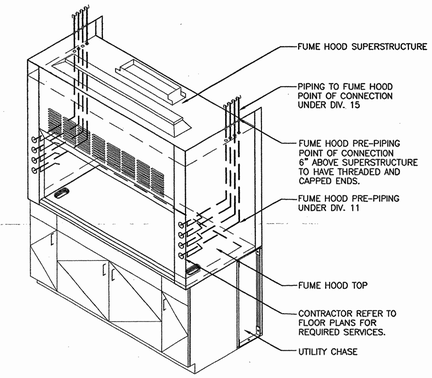

FUME HOOD PRE-PIPING 1/2"=1'-0" (3)

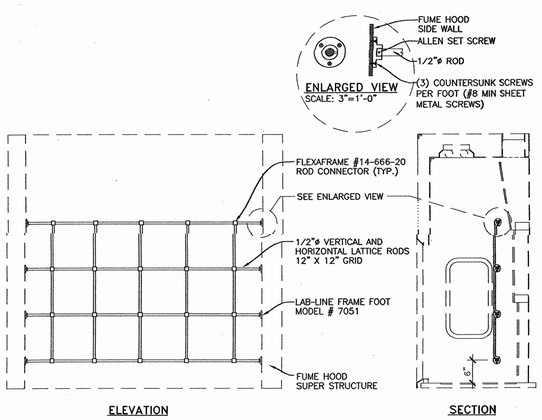

ELEVATION

SECTION

FUME HOOD LATICE ROD ASSEMBLY 3/4"=1'-0" (4)

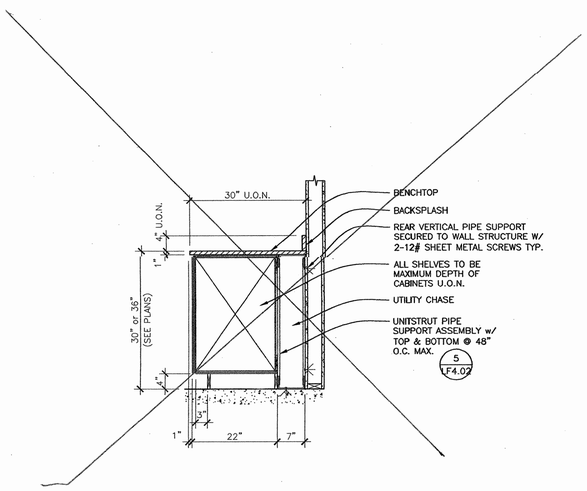

USE DETAILS 4 & 5/LF4.03 PER RFI 445

WALL MOUNTED CASEWORK 3/4"=1'-0" (5)

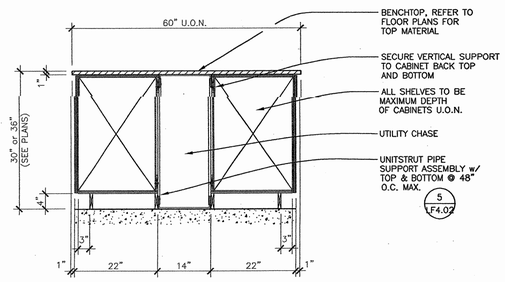

ISLAND BENCH CASEWORK 3/4"=1'-0" (6)

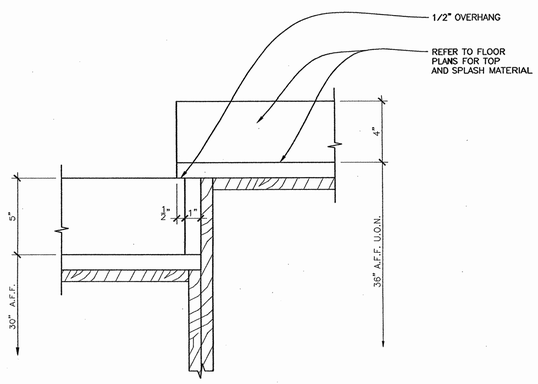

BENCHTOP TRANSITION 3"=1'-0" (7)

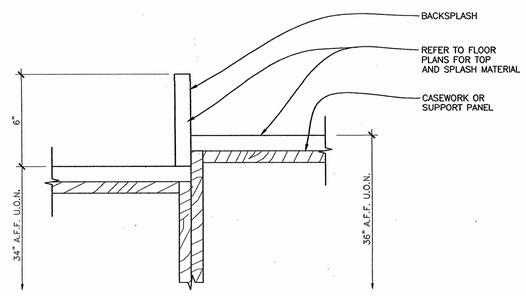

BENCHTOP TRANSITION AT ADA ISLAND 3"=1'-0" (8)

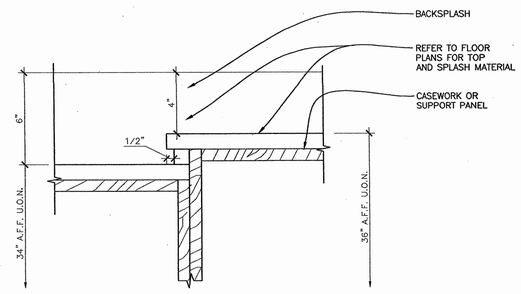

BENCHTOP TRANSITION AT ADA WALL 3"=1'-0" (9)

tBP
architecture
planning
interiors
management

tBP/Architecture
1000 Burnett Avenue, Suite 140
Concord, CA 94520
p: 925.246.6419 f: 925.246.6495

LICENSED ARCHITECT STATE OF CALIFORNIA

RFD
RESEARCH FACILITIES DESIGN
1700 Montgomery Street, Suite 203
San Diego, California 92133
(619) 284-4001
FAX (619) 284-4001

LICENSED ARCHITECT STATE OF CALIFORNIA No. C-14748 REN. 1-31-05

CERTIFICATION STAMP
DIV. OF STATE ARCHITECT
OFFICE OF REGULATION SERVICES
APPL - 19.90025
AC 25 RFI 445
DATE 1-13-05

name
address
city, state, zip
ph:
fx:

SCIENCE BUILDING
LOS MEDANOS COLLEGE

Contra Costa Community College District

tBP project number : 20241.00
file name: DETAILS
drawn by: DI checked by: DI
date: NOVEMBER 15, 2004

Rev.	date:	description:

drawing title:
LABORATORY FURNISHINGS DETAILS

LMC SCIENCE 313-023-T12.01-0-00.00
drawing no.:
LF4.00

ADDENDUM
DSA FILE # 1-12
DSA APPL # 01-106-236

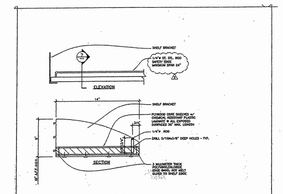

ADJUSTABLE WALL SHELVING WITH 1/4" SAFETY EDGE NO SCALE (8)

LABORATORY FURNISHINGS DETAILS: DETAIL 8/8

SCIENCE BUILDING
LOS MEDANOS COLLEGE
Pittsburg, CA
Contra Costa Community College District

ARCHITECT
SPV/Architects
2000 Powell Street, Suite 740
Emeryville, CA 94608
p 510.547.1200 f 510.596.0499

BPS
architectural
planning
interiors
management

LICENSED ARCHITECT
STEVEN P. VOGEL
No. C-12742
CALIFORNIA
04-08-05

ADDENDUM #2
DATE: 04/08/05
DSA NO.: 01-106236
PERS REVISED IN PART
SHEET: LFA-05
SHEET LFA-25

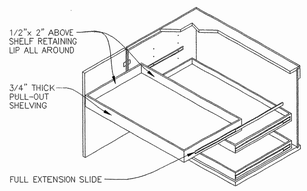

ISOMETRIC

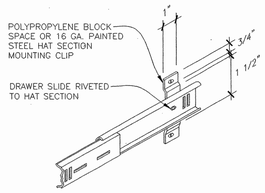

FULL EXTENSION SLIDE
3"=1'-0"

PULL-OUT SHELF 1/2"=1'-0" (1)

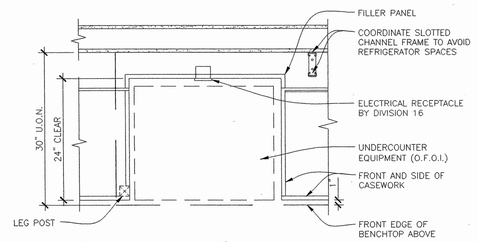

PLAN VIEW

REAR ENCLOSURE PANEL AT UNDERCOUNTER EQUIP. 1"=1'-0" (2)

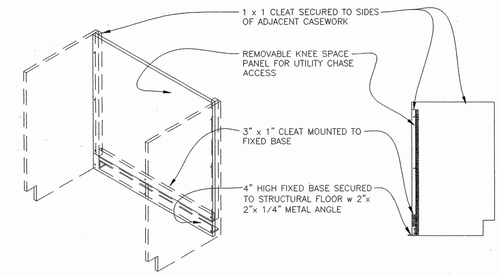

REMOVABLE KNEE SPACE PANEL 3/4"=1'-0" (3)

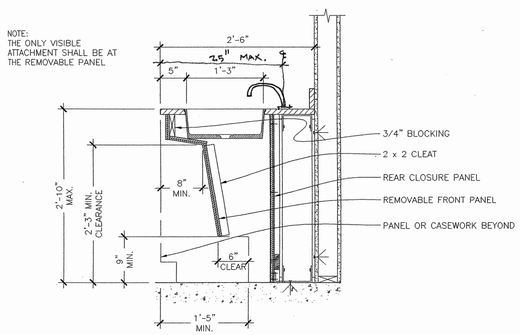

KNEE OPENING AT ADA SINK CONDITION 1"=1'-0" (4)

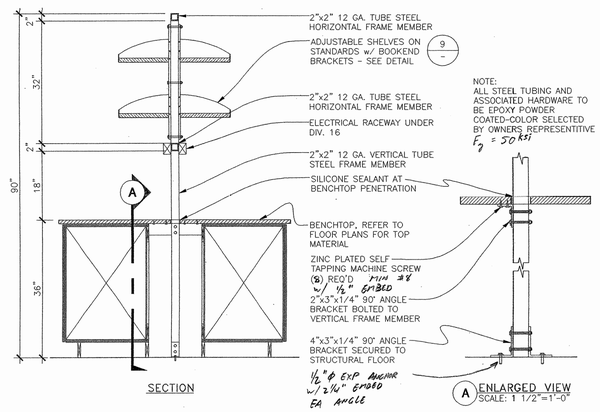

SECTION

NOTE:
ALL STEEL TUBING AND ASSOCIATED HARDWARE TO BE EPOXY POWDER COATED-COLOR SELECTED BY OWNERS REPRESENTITIVE
F7 = 50451

A ENLARGED VIEW
SCALE: 1 1/2"=1'-0"

ADJUSTABLE ISLAND BENCH REAGENT SHELVES 3/4"=1'-0" (5)

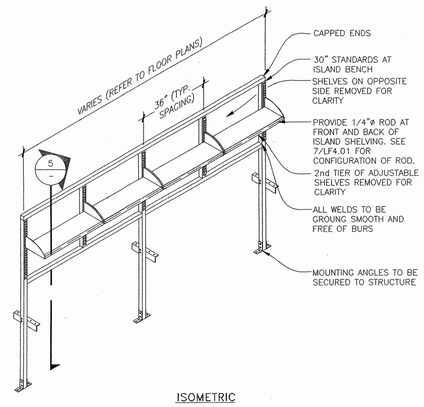

ISOMETRIC

ISLAND BENCH REAGENT SHELVES ISOMETRIC 3/8"=1'-0" (6)

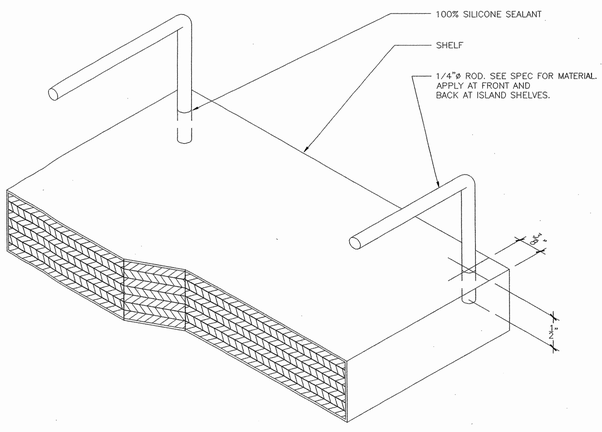

SAFETY RAIL AT SHELF 1"=1'-0" (7)

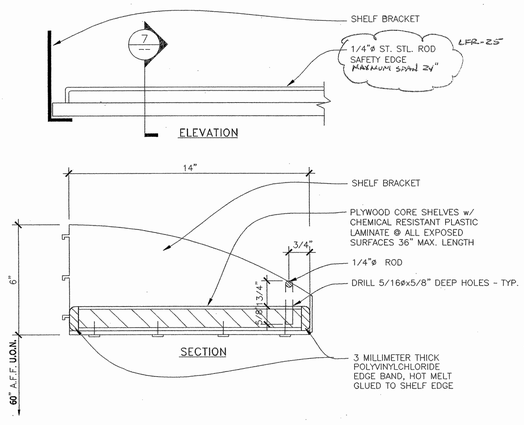

ADJUSTABLE WALL SHELVING WITH 1/4" SAFETY EDGE NO SCALE (8)

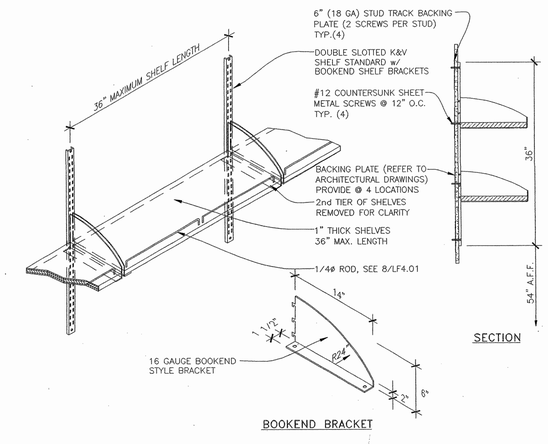

ADJUSTABLE WALL SHELVING 1"=1'-0" (9)

tBP
architecture
planning
interiors
management

LICENSED ARCHITECT • VINCENT DI STEFANO • No. C-6865 • STATE OF CALIFORNIA

tBP/Architecture
1000 Burnett Avenue, Suite 140
Concord, CA 94520
p: 925.246.6419 f: 925.246.6495

LICENSED ARCHITECT • STEVE W. TOWNE • No. C 14749 • REG. 1-05 • STATE OF CALIFORNIA

RFD
RESEARCH FACILITIES DESIGN
3995 Fifth Avenue, Suite 300
San Diego, California 92103
PH: 619 - 294 - 0500
FAX: 619 - 294 - 4901

DSA/OSHPD/DSA-SS/CC
APPROVED FOR CONSTRUCTION
DIV. OF THE STATE ARCHITECT
OFFICE OF REGULATION SERVICES
APR. - 01 2005
DATE 1-13-05

name
address
city, state, zip
pht fxc

SCIENCE BUILDING
LOS MEDANOS COLLEGE

Contra Costa Community College District

tBP project number : 20241.00
file name: DETAILS
drawn by: DI checked by: DI
date: NOVEMBER 15, 2004

Rev	date	description

drawing title:
LABORATORY FURNISHINGS DETAILS

LMC SCIENCE 313-023-112.01-0-00.00
drawing no:
LF4.01

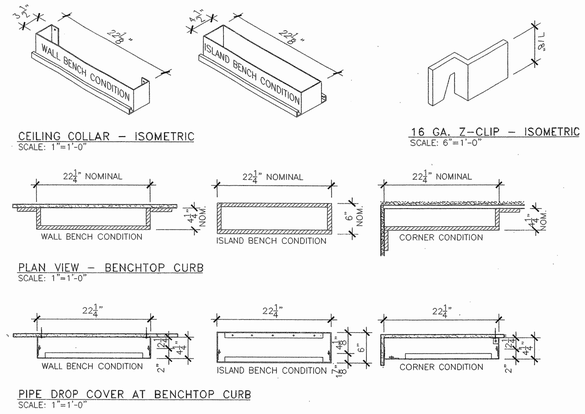

PIPE DROP DETAILS

1"=1'-0" (1)

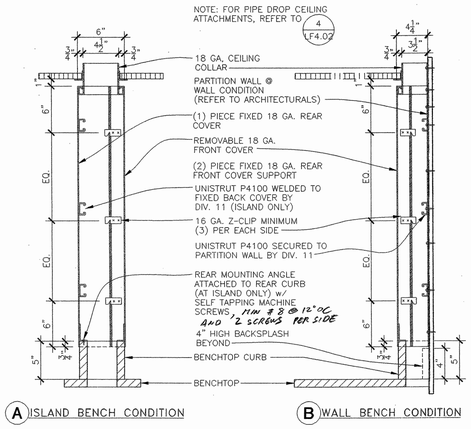

PIPE DROP SECTIONS

1 1/2"=1'-0" (2)

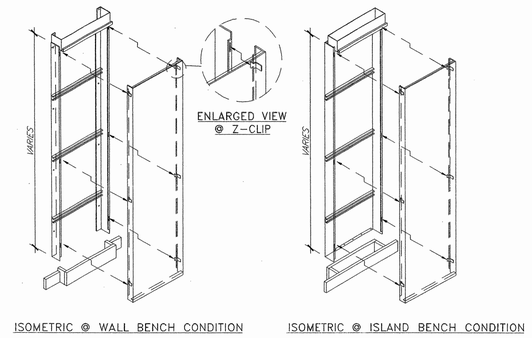

PIPE DROP ASSEMBLY VIEW

1/2"=1'-0" (3)

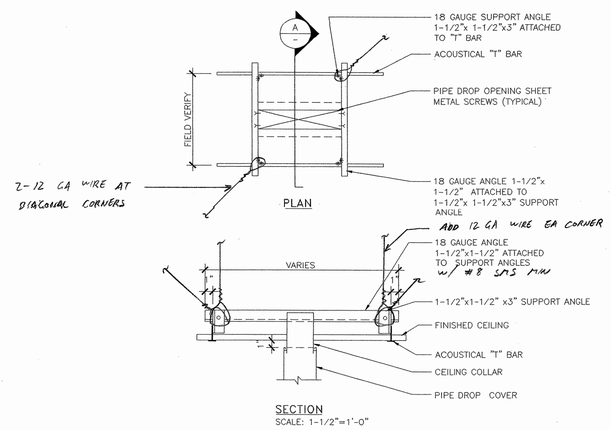

PIPE DROP CEILING ATTACHMENT

3/4"=1'-0" (4)

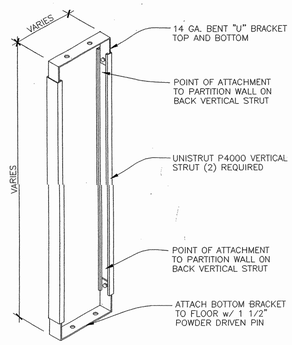

UNISTRUT PIPE SUPPORT ASSEMBLY

1 1/2"=1'-0" (5)

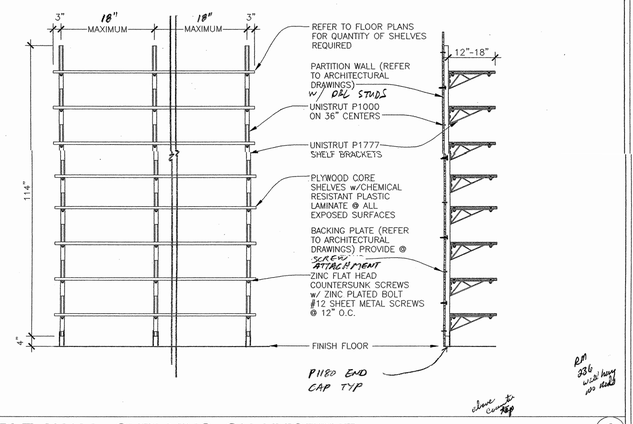

ADJUSTABLE WALL SHELVING ON UNISTRUT

1/2"=1'-0" (6)

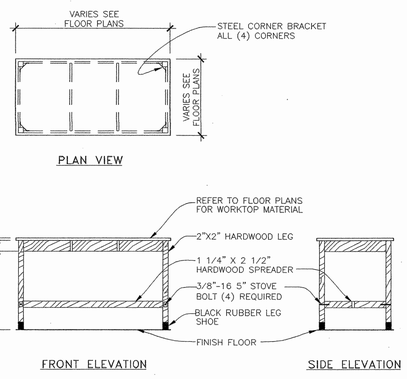

MOVEABLE LABORATORY TABLE

1/2"=1'-0" (7)

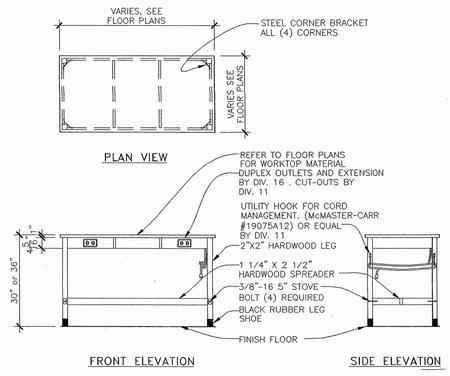

MOVEABLE LABORATORY TABLE WITH DUPLEX OUTLETS

1/2"=1'-0" (8)

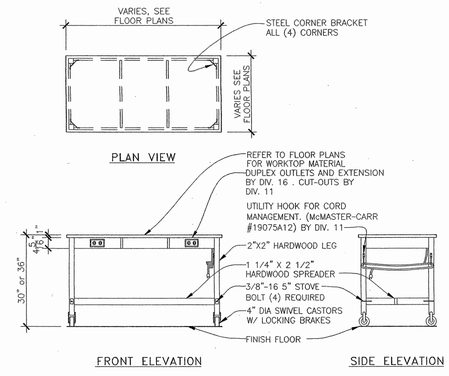

MOVEABLE LABORATORY TABLE WITH CASTERS

1/2"=1'-0" (9)

tBP
architecture
planning
interiors
management

tBP/Architecture
1000 Burnett Avenue, Suite 140
Concord, CA 94520
p: 925.246.6419 f: 925.246.6495

LICENSED ARCHITECT
STATE OF CALIFORNIA

LICENSED ARCHITECT
No. C 14798
STATE OF CALIFORNIA

RFD
RESEARCH FACILITIES DESIGN
3655 Fifth Avenue, Suite 301
San Diego, California 92103
Tel: 619 . 297 . 7000
FAX: 619 . 294 . 4901

IDENTIFICATION STAMP
DIV. OF THE STATE ARCHITECT
OFFICE OF REGULATION SERVICES
APPL - 01-106229
AC
DATE 1-15-05

name
address
city, state, zip
ph:
fx:

SCIENCE BUILDING
LOS MEDANOS COLLEGE

Contra Costa Community College District

tBP project number : 20241.00
file name: DETAILS
drawn by: DI checked by: DI
date: NOVEMBER 15, 2004

Rev	date	description

drawing title:
LABORATORY FURNISHINGS DETAILS

LMC SCIENCE 313-023-T12.01-0-00.00
drawing no:
LF4.02

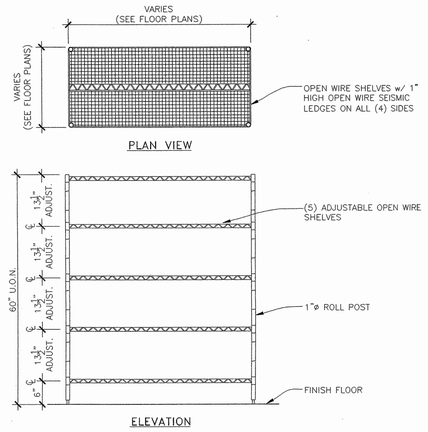

HEAVY DUTY WIRE SHELVING 3/4"=1'-0" (1)

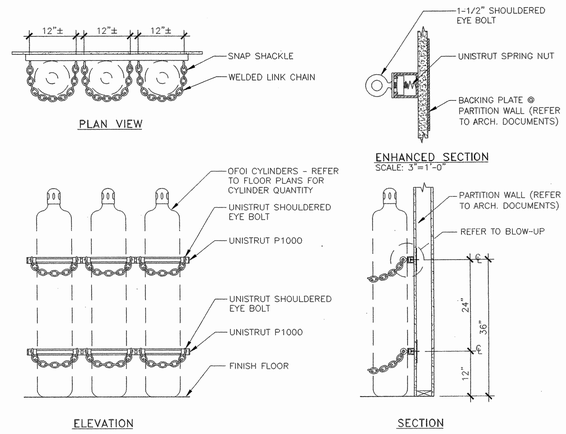

CYLINDER RESTRAINT ASSEMBLY 3/4"=1'-0" (2)

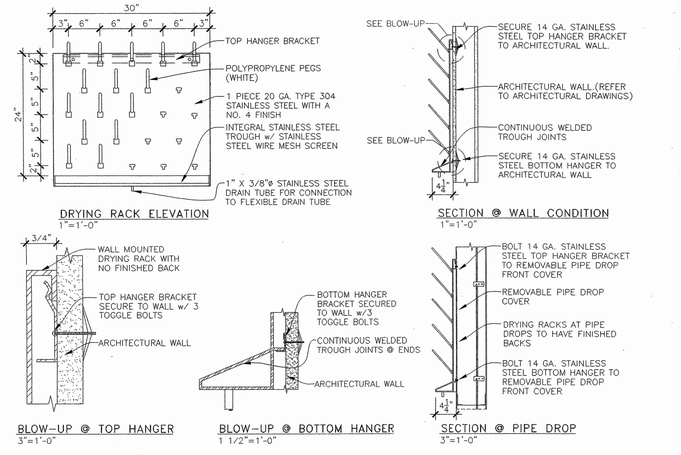

STAINLESS STEEL DRYING RACK AS NOTED (3)

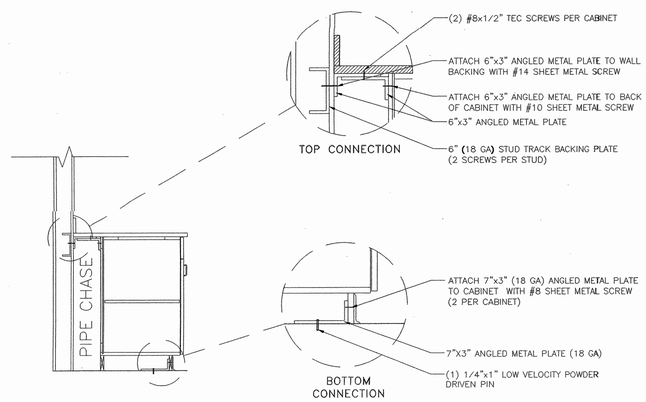

ANCHORAGE DETAIL - CASEWORK 1-1/2"=1'-0" (4)

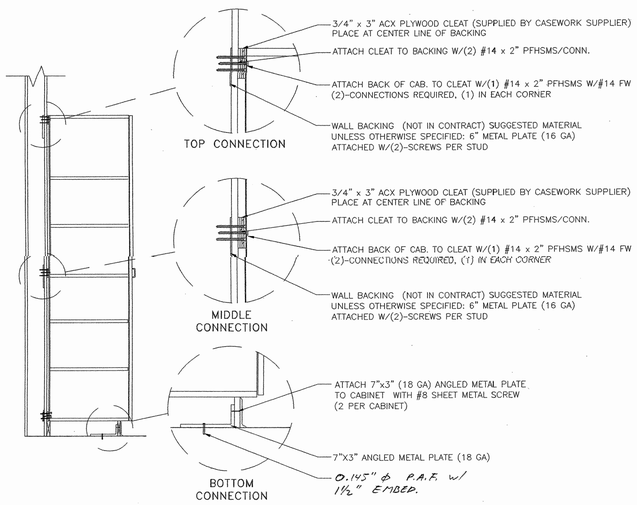

ANCHORAGE DETAIL - TALL STORAGE CABINET 1-1/2"=1'-0" (5)

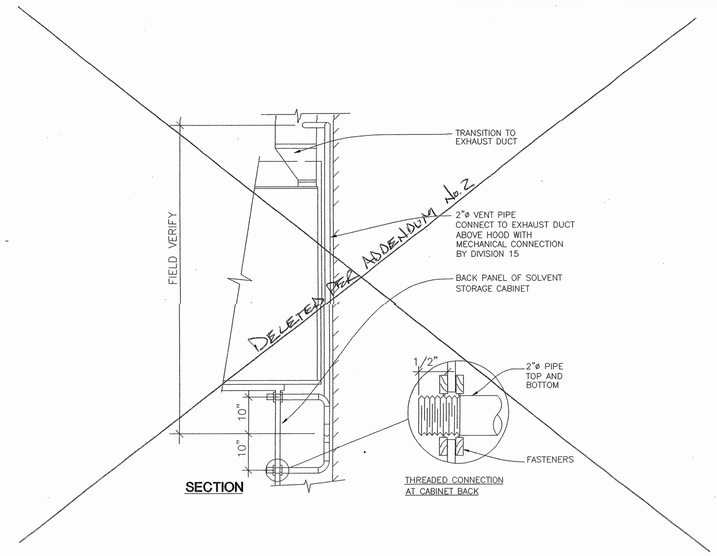

VENTING OF FLAMMABLE STORAGE CABINET 3/4"=1'-0" (6)

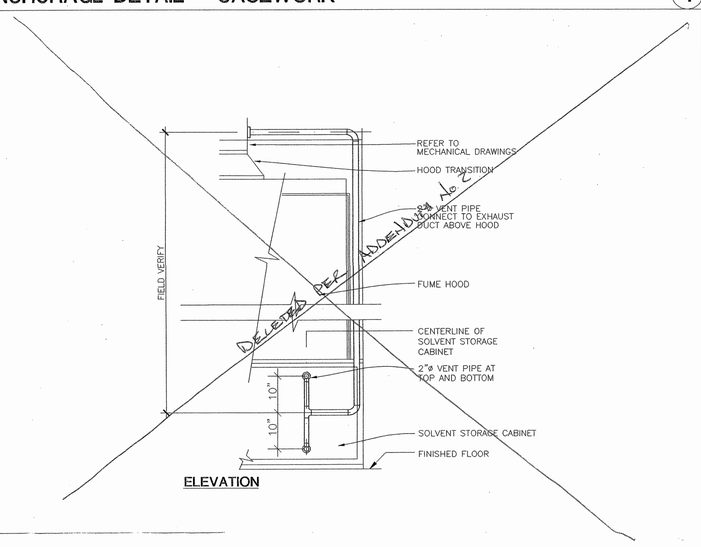

VENTING OF FLAMMABLE STORAGE CABINET 3/4"=1'-0" (7)

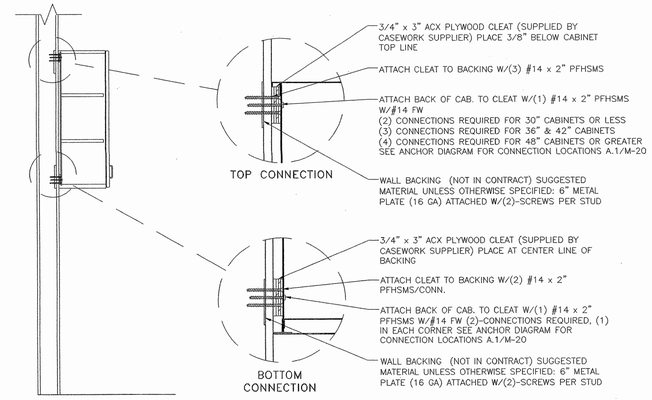

ANCHORAGE DETAIL - WALL CABINET 1-1/2"=1'-0" (8)

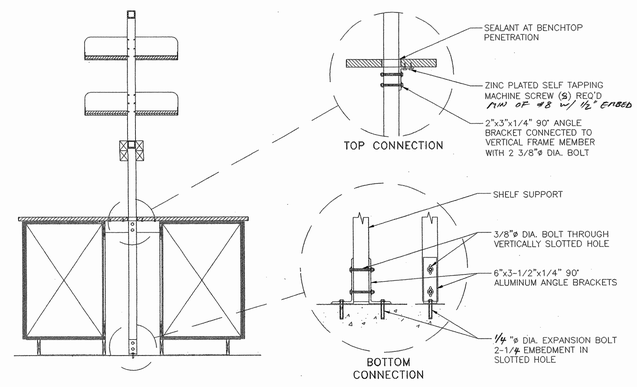

ANCHORAGE DETAIL - ISLAND SHELVING 1-1/2"=1'-0" (9)

tBP
architecture
planning
interiors
management

tBP/Architecture
1000 Burnett Avenue, Suite 140
Concord, CA 94520
p: 925.246.6419 f: 925.246.6495

RFD
RESEARCH FACILITIES DESIGN
1400 Rhode Island Avenue, Suite 3
San Diego, California 92103
PH: 619 294 4800
FAX: 619 294 4801

IDENTIFICATION STAMP
DSA/SS/CC/HC&E/LA/ACCESS
OFFICE OF REGULATION SERVICES
APP. #19-19-03-2A
DATE 11-3-05

name
address
city, state, zip
ph:
fx:

SCIENCE BUILDING
LOS MEDANOS COLLEGE

Contra Costa Community College District

tBP project number: 20241.00
file name: DETAILS
drawn by: DI checked by: DI
date: NOVEMBER 15, 2004

Rev.	Date	Description

drawing title:
LABORATORY FURNISHINGS DETAILS

LMC SCIENCE 313-023-T12.01-0-00.00
drawing no: LF4.03

S. J. AMOROSO
Request For Information/Clarification

DSA FILE NO. 7-C1
DSA APPL. No. 01-106228

To: IBP/Architecture
1000 Burnett Ave, Suite 140
Concord, CA 94520

Attn: Dale Cheung, Tom Blackett
Fax: 925-246-6495

Subj.: Fume Hood Anchorage
Reference (dwg. spec.): LF1-1a

Project: LOS MEDANOS COLLEGE
SCIENCE BUILDING
Contra Costa Community College District

IBP job: 20247.00

RFI No.: **450**
Subcontractor RFI: DOI 17

Reply Requested By: 12/28/06

INFORMATION REQUESTED: Date: 12/18/06

Please note the attached Dow Diversified RFI No. 17 regarding the anchorage of the fume hoods in the cabinetry. Please advise.

SUGGESTED SOLUTION:
Cost Impact: ☐ ☐ Schedule Impact: ☐ days By: Mark Delgado

RESPONSE: DATE: 12/21/06

No exceptions taken to proposed anchorage detail.

Richard Cuta

RFI # 000
Page 1

Dow Diversified, Inc.

REQUEST FOR INFORMATION
Los Medanos College Science Building, 2352K

PM/RFIs
DOI #: 17

To: Mark Delgado
Subject: Fume Hood Anchorage
Spec: 11601 Drawings: 2, 3, & 6/LF4.04

Fax: 925-427-7570
Room: Varies

REQUEST:
DDI would like to propose the following anchorage for the fume hoods. Please find the included drawing. Following are the concerns.

1) Dowel is shown through bolt at the back of the countertop. Once the countertop is place it unlikely that a person will be able to place the bolt in thread the nut as most of the fume hoods have the knee spaces filled with cabinets. Of course the cabinets have to be in place when the countertop is set.

2) Anchorage angles are shown under the fume hood base cabinet at the front and back of the cabinet. The cabinets both metal and wood have an integral toe kick. This means that the cabinet bottom is fixed to the cabinet. Once the angles are mounted to the floor and the cabinet is set over them, there is no way to reach the back angle to screw it to the cabinet. The front angle is accessible by using a self tapping screw through the front of the toe kick into the angle.

3) The through bolts shown at the side of the fume hoods may only serve to anchor the countertop to the fume hood and not necessarily the cabinets. In the case of wood cabinets, the wood cabinet are open thus there is nothing to bolt to. If however the cabinets did have a wood top, then this would only be as strong as the wood joinery holding the top to the cabinet. In the case of the metal acid and flammable cabinets, the cabinets are double wall construction because of the intended purpose. Self tapping screws can penetrate the outer wall, but a through bolt will penetrate both walls and compromise the cabinet and possibly the floor.

DDI would like to propose the following anchorage as shown on the included drawings.

1) Anchor the base cabinets at the front toe kick.

2) Predrill and use self tapping screws at the sides of the fume hood to anchor the hood to the countertop. (Access for these screws is either from the out side or through the access portholes in cases where side access is not possible)

3) Use construction adhesive to attach the countertop to the base cabinets.

4) Use 3X5 steel angles at the top back of the base cabinet similar to detail 4/LF4.03. This will anchor the base cabinet to the wall. Before setting the fume hood we would then predrill the epoxy and then run a self tapping screw down through the epoxy and into the steel angles.

5) We would attach a steel angle to the wall and the top of the super structure of the fume hood using self tapping screws.

Steps 1 through 4 would effectively tie together the fume hood, countertop, and base cabinet while anchoring them in place.

In these situations DDI typically uses 3"X3" 16GA angles as on the included drawing.

SUGGESTION:
Please approve.

PRIORITY: ASAP
DUE DATE: 12/22/2006
BY: Ben Kemper DATE: 12/18/2006

Response By:
Response Date:
RESPONSE:

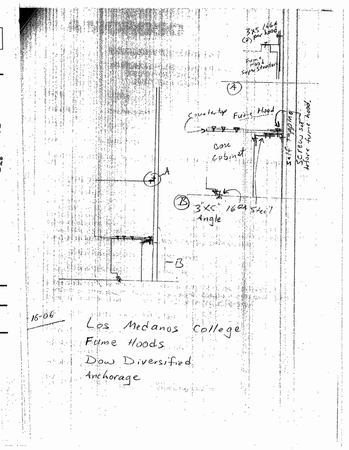

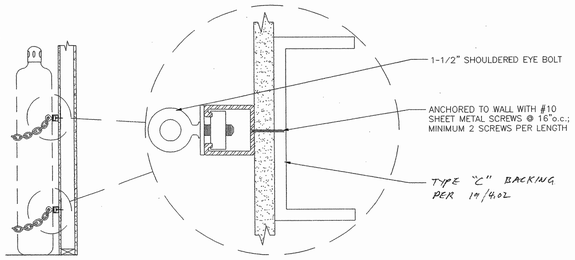

ANCHORAGE DETAIL - CYLINDER RESTRAINT

1-1/2"=1'-0" (1)

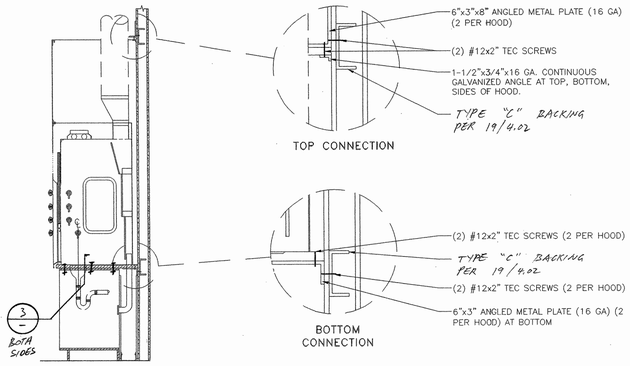

SEE RFI 450

ANCHORAGE DETAIL - HOOD

1-1/2"=1'-0" (2)

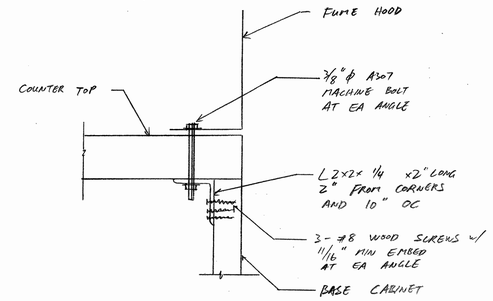

SEE RFI 450

ANCHORAGE DETAIL - HOOD

NO SCALE (3)

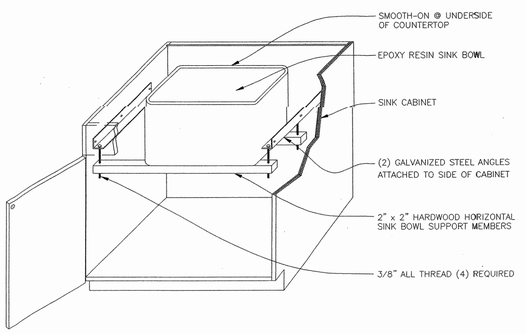

SEE RFI 450

UNDER-COUNTER MOUNT SINK SUPPORT

1"=1'-0" (4)

NOT USED

NO SCALE (5)

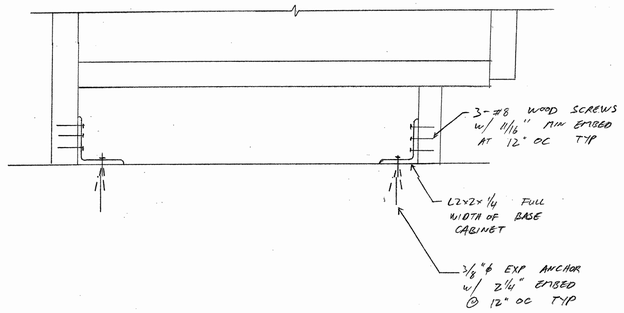

ANCHORAGE DETAIL - HOOD BASE CABINET

NO SCALE (6)

NOT USED

NO SCALE (7)

NOT USED

NO SCALE (8)

NOT USED

NO SCALE (9)

tBP
architecture
planning
interiors
management

tBP/Architecture
1000 Burnett Avenue, Suite 140
Concord, CA 94520
p: 925.246.6419 f: 925.246.6495

RFD
RESEARCH FACILITIES DESIGN
1400 Rosecrans Avenue, Suite 200
San Diego, California 92106
TEL: 619 . 297 . 0909
FAX: 619 . 294 . 4801

DIVISION OF STATE ARCHITECT
OFFICE OF REGULATION SERVICES
APP. 01-106.02
DATE 12-14-05

name:
address:
city, state, zip:
ph:
fx:

SCIENCE BUILDING
LOS MEDANOS COLLEGE

Contra Costa Community College District

tBP project number: 20241.00
file name: DETAILS
drawn by: DI checked by: DI
date: NOVEMBER 15, 2004

Rev	date	description

drawing title:
LABORATORY FURNISHINGS DETAILS

LMC SCIENCE 313-023-T12.01-0-00.00
drawing no: LF4.04

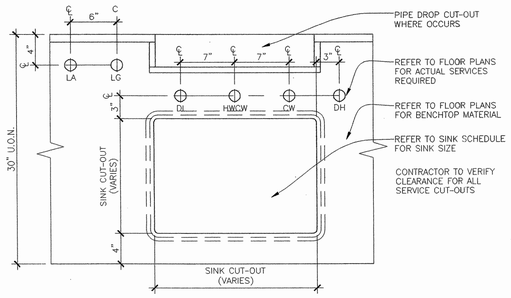

PLAN VIEW

TYPICAL LABORATORY FIXTURE SPACING 1 1/2"=1'-0" (1)

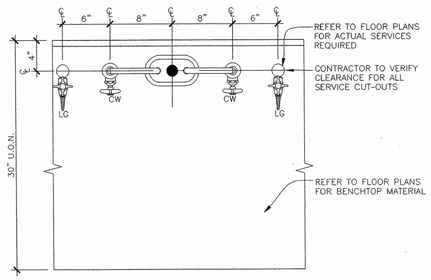

PLAN VIEW

FIXTURE SPACING AT WALL BENCH CUP SINK 1 1/2"=1'-0" (2)

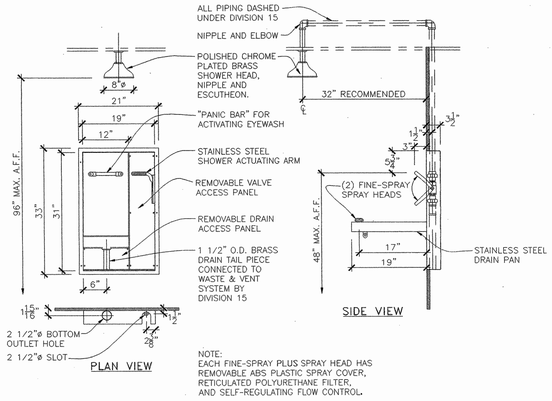

PLAN VIEW

SIDE VIEW

NOTE:
EACH FINE-SPRAY PLUS SPRAY HEAD HAS REMOVABLE ABS PLASTIC SPRAY COVER, RETICULATED POLYURETHANE FILTER, AND SELF-REGULATING FLOW CONTROL.

SAFETY SHOWER/EYEWASH SURFACE MOUNTED 3/4"=1'-0" (3)

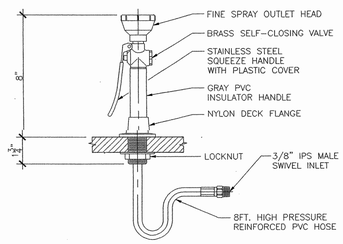

DECK MOUNTED HAND HELD DRENCH HOSE (DH) 3"=1'-0" (4)

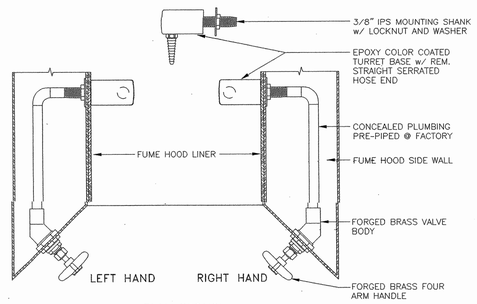

PLAN SECTION

FUME HOOD FRONT LOADED WATER FIXTURES 3"=1'-0" (5)

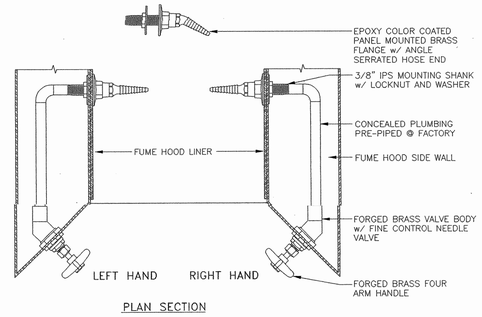

PLAN SECTION

FUME HOOD REMOTE NEEDLE VAVLE 3"=1'-0" (6)

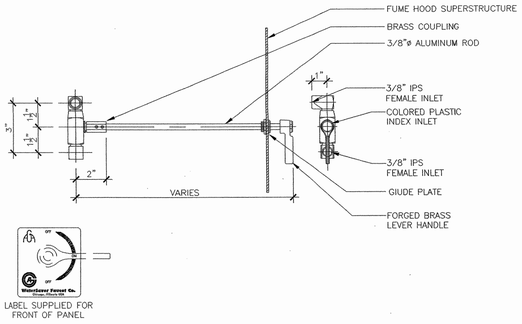

LABEL SUPPLIED FOR FRONT OF PANEL

FUME HOOD BALL VALVE 3"=1'-0" (7)

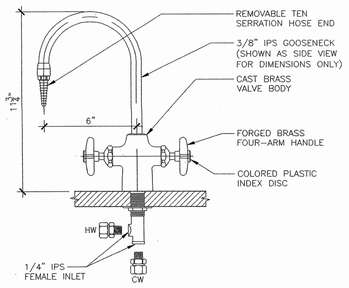

DECK MOUNTED IHWICW FAUCET 3"=1'-0" (8)

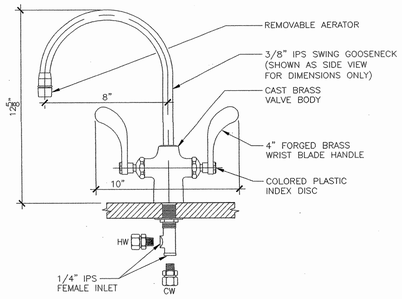

DECK MOUNTED IHWICW FAUCET ADA 3"=1'-0" (9)

tBP
architecture
planning
interiors
management

tBP/Architecture
1000 Burnett Avenue, Suite 140
Concord, CA 94520
p. 925.246.6419 f. 925.246.6495

LICENSED ARCHITECT STATE OF CALIFORNIA

RESEARCH FACILITIES DESIGN
1500 Rosecrans Avenue, Suite 200
San Diego, California 92123
(619) 294-4901 FAX: 619 - 294-4901
RFD

LICENSED ARCHITECT SENIE E TOWNE No. C 14769 REG. 1/05 STATE OF CALIFORNIA

IDENTIFICATION STAMP
DSA, OFFICE OF REGULATION SERVICES
APPL - 19150026
AC. 2-15-05 SS
DATE 1-10-05

name
address
city, state, zip
ph: fx:

SCIENCE BUILDING
LOS MEDANOS COLLEGE

Contra Costa Community College District

tBP project number : 202471.00
file name: SERVICE FITTING DETAILS
drawn by: DI checked by: DI
date: NOVEMBER 15, 2004

key	date	description

drawing title:
LABORATORY FURNISHINGS
SERVICE FITTING DETAILS

LMC SCIENCE 313-023-112.01-0-00.00
drawing no: LF5.00

ADDENDUM
DSA FILE # T-C1
DSA APPL # 01-106238

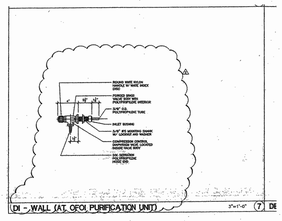

LABORATORY FURNISHINGS SERVICE FITTING DETAILS: DETAIL #7
SHEET LF-4.02

SCIENCE BUILDING
LOS MEDANOS COLLEGE
Pittsburg, CA
Contra Costa Community College District
School District

LPA, Inc.
Architecture
Interiors
Planning
Sustainable Design
1456 Civic Drive, Suite 100
Walnut Creek, CA 94596
p: 925.944.4878 f: 925.945.6492

REGISTERED ARCHITECT
JOHN TOSCANO
No. C-17192
STATE OF CALIFORNIA

ADDENDUM #2
DATE: 04/11/05
DSA NO. 01-106238
THIS REVISION IN PART
SHEET: LF4.02
SHEET: LFR-26

Los Medanos College
4CD Proj.# : L-S01-B-23-SC
Science Building

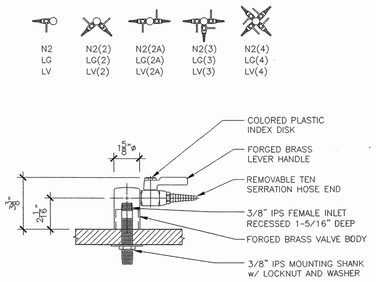

DECK MOUNTED LA, LV, LG BALL VALVE

3"=1'-0" (1)

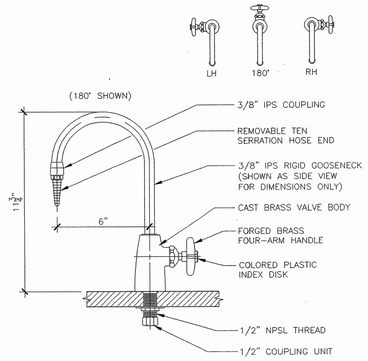

DECK MOUNTED ICW FAUCET

3"=1'-0" (2)

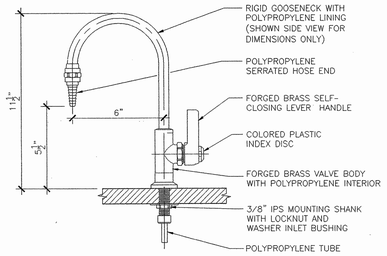

NOTES:
1. ALL COMPONENTS IN CONTACT WITH PURE WATER SHALL BE POLYPROPYLENE.
2. VALVE SHALL BE CONVERTABLE FROM TO SELF-CLOSING TO MANUAL CONTROL.

DECK MOUNTED DI FAUCET

3"=1'-0" (3)

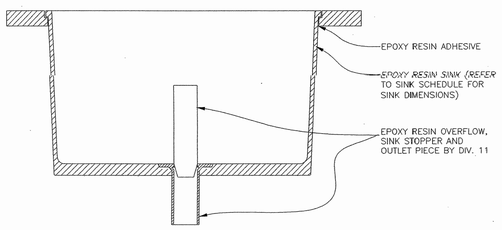

EPOXY RESIN DROP IN SINK

3"=1'-0" (4)

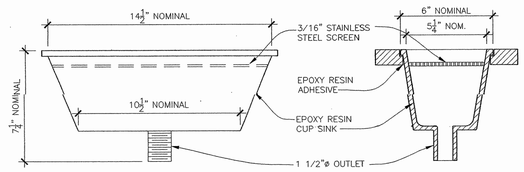

RECTANGULAR CUPSINK

3"=1'-0" (5)

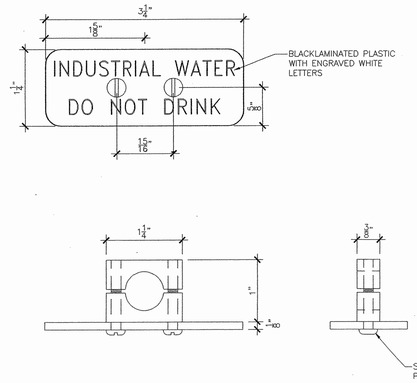

INDUSTRIAL WATER SIGN

12"=1'-0" (6)

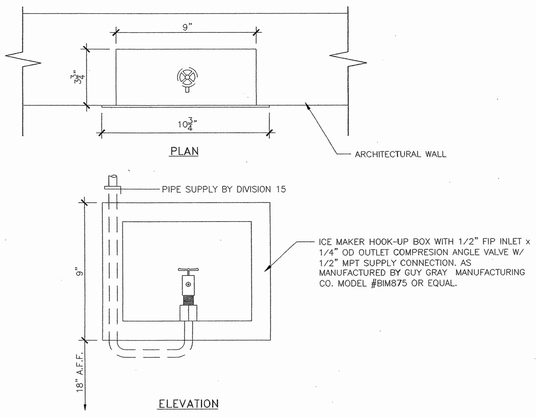

DETAIL REPLACED, SEE LFR-26

ICW - WALL (ICE MAKER HOOK-UP)

3"=1'-0" (7)

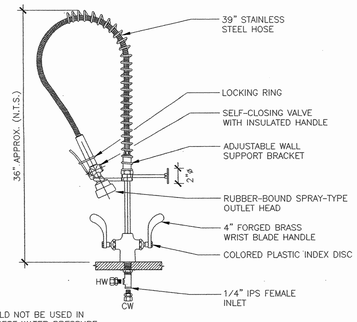

NOTE:
THIS HOSE SHOULD NOT BE USED IN APPLICATIONS WHERE WATER PRESSURE EXCEEDS 90 PSI.

DECK MOUNTED IHWICW SPRAY FAUCET

3"=1'-0" (8)

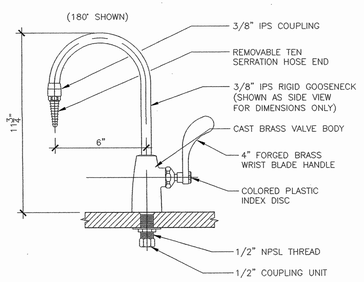

DECK MOUNTED ICW FAUCET ADA

3"=1'-0" (9)

tBP
architecture
planning
interiors
management

tBP/Architecture
1000 Burnett Avenue, Suite 140
Concord, CA 94520
p: 925.246.6419 f: 925.246.6495

RFD
RESEARCH FACILITIES DESIGN
1615 Murray Canyon Rd., Suite 1000
San Diego, California 92108
P.N.: (619) 297-0594 F.N.: (619) 297-0595

IDENTIFICATION STAMP
DIV. OF THE STATE ARCHITECT
OFFICE OF REGULATION SERVICES
APPR. - 09/06/05
TS SS
DATE 1-12-05

name
address
city, state, zip
ph: fx

SCIENCE BUILDING
LOS MEDANOS COLLEGE

Contra Costa Community College District

tBP project number : 20241.00
file name: SERVICE FITTING DETAILS
drawn by: DI checked by: DI
date: NOVEMBER 15, 2004

rev	date	description

drawing title:
LABORATORY FURNISHINGS
SERVICE FITTING DETAILS

LMC SCIENCE 313-023-112.01-0-00.00
drawing no: LF5.01

GENERAL NOTES

1. CONTRACTOR SHALL CAREFULLY EXAMINE ALL DRAWINGS AND SPECIFICATIONS TO PROPERLY DETERMINE SCOPE OF WORK.
2. CONTRACTOR SHALL FIELD VERIFY CONDITIONS AT ALL POINTS OF CONNECTION PRIOR TO INSTALLATION.
3. DIVISION 15 SCOPE OF WORK INCLUDES THE INSTALLATION OF ALL SERVICE FITTINGS AND PIPING AS INDICATED ON FIXTURE & EQUIPMENT SCHEDULES AND AS SHOWN ON LF– & LP– DRAWINGS. (LABORATORY SERVICE FITTINGS FURNISHED BY DIVISION 11)
4. CONFORM TO ALL APPLICABLE LOCAL, STATE, FEDERAL AND HEALTH AUTHORITY CODES.
5. ALL PIPING SHOWN ON DRAWINGS IS DIAGRAMMATIC. ADDITIONAL OFFSETS, WHICH MAY BE REQUIRED, IN WASTE & VENT RISERS OR IN BELOW BENCH SERVICE PIPING SHALL BE PROVIDED UNDER DIVISION 15.
6. PIPE LINES ENTERING LABORATORIES ARE SHOWN WITH WIDE SEPARATION FOR CLEAR IDENTIFICATION PURPOSES ONLY. MAINTAIN A TIGHT AND ORDERLY GROUPING OF PIPES WITHIN EACH LABORATORY. LOCATION, ROUTING AND SUPPORT OF LABORATORY PIPING SHALL BE COORDINATED WITH THE INSTALLED EQUIPMENT, OVERHEAD SERVICE CARRIERS, PIPE DROP ENCLOSURES, BUILDING STRUCTURAL ELEMENTS, DUCTWORK, ELECTRICAL CONDUITS, POWER PANELS AND LIGHT FIXTURES.
7. ALL EXPOSED TO VIEW PIPING SHALL BE INSTALLED WITH SPECIAL CARE GIVEN TO UNIFORM SPACING AND NEAT APPEARANCE. PAINT TO MATCH ROOM FINISH PROVIDED UNDER DIVISION 9.
8. PIPING, DRAINAGE AND VENT SYSTEMS TO BE INSTALLED IN ACCORDANCE WITH APPLICABLE PLUMBING CODES AND LOCAL REGULATIONS.
9. VALVES AND CAPS AT POINTS OF CONNECTION ARE SHOWN ON LP–SERIES DRAWINGS FOR COORDINATION ONLY, REFER TO P–SERIES DRAWINGS FOR LOCATION AND SIZES.
10. PROVIDE REDUCERS ON POINT OF CONNECTION WHERE SIZES SHOWN ON P–SERIES DRAWINGS ARE LARGER THAN INDICATED ON LP–SERIES DRAWINGS.
11. PROVIDE STANDPIPE–TYPE AIR CHAMBER WATER HAMMER ARRESTORS ON ALL WATER PIPING FOR EACH DISTRIBUTION LINE, DOWN STREAM OF SHUT OFF VALVES.
12. PROVIDE VALVED AND CAPPED CONNECTIONS WHERE "ROUGH–IN ONLY" OR "FUTURE SERVICES" ARE INDICATED ON DRAWINGS.
13. PIPE SIZES ARE INDICATED ON THESE DRAWINGS BY MEANS OF THE POINT OF CONNECTION, SERVICE DROP, FITTING STATION AND FIXTURE & EQUIPMENT CONNECTION SCHEDULES.

    THE FOLLOWING GUIDELINES SHALL GOVERN THE PIPE SIZES:

    RFI 219

    A. THE POINT OF CONNECTION SCHEDULE INDICATES PIPE SIZE ENTERING EACH LABORATORY.

       THE SIZE SHALL EXTEND UNDIMINISHED UP TO THE LAST TEE BRANCH OF THE CEILING DISTRIBUTION PIPING.

    B. THE SERVICE DROP SCHEDULE SHALL GOVERN THE DROP AS WELL AS EACH ASSOCIATED BRANCH.

       THESE SERVICES SHALL EXTEND TO BELOW BENCH AND RUN HORIZONTALLY UNDIMINISHED IN SIZE UP TO THE LAST TEE SERVICING DIFFERENT FITTINGS.

    C. THE FIXTURE AND EQUIPMENT CONNECTION SCHEDULE SHALL INDICATE THE SIZE FOR THE FINAL SECTION OF PIPING.
14. FITTINGS ON LP–SERIES DRAWINGS ARE SYMBOLIC ONLY. REFER TO LF–SERIES DRAWINGS FOR ACTUAL FITTINGS, LOCATIONS AND ARRANGEMENTS.
15. REFER TO THE LABORATORY PLUMBING DETAILS FOR TYPICAL PIPE ROUTING BELOW AND WITHIN THE CASEWORK. THE QUANTITY, SIZE AND MATERIAL OF PIPE WILL VARY IN ACCORDANCE WITH THE TYPE OF SERVICES. INSTALL IN ACCORDANCE WITH THE PIPING ARRANGEMENT AND ORIENTATION SHOWN ON PLANS.
16. FITTING/FIXTURE INLET SIZE MAY VARY. PROVIDE APPROPRIATE CONNECTORS.
17. FLOOR DRAINS AND FLOOR SINKS ARE SHOWN ON LABORATORY PLUMBING PLANS FOR GENERAL LOCATION AND REFERENCE. BUILDING PLUMBING DRAWINGS INDICATE ACTUAL LOCATION, SIZE AND TYPE OF DEVICE.
18. TEST ALL VALVES, SERVICE FITTINGS, EMERGENCY SHOWERS, EYEWASHES AND DRENCH HOSES TO ENSURE PROPER OPERATION.
19. INSULATE PIPING IN ACCORDANCE WITH DIVISION 15 SPECIFICATIONS.
20. PROVIDE STAINLESS STEEL ESCUTCHEON PLATES FOR ALL EXPOSED PIPE PENETRATIONS IN WALLS AND CEILINGS.
21. PROVIDE MINIMUM SIZE OF 2" LABORATORY WASTE & 1–1/2" VENT RISER WHERE (W) LABORATORY WASTE POINTS OF CONNECTION SYMBOL IS INDICATED ON DRAWINGS. WASTE PENETRATIONS AT LABORATORY SINKS & CUPSINKS MAY BE OFFSET TO AVOID STRUCTURAL BEAMS AND JOISTS.
22. ALL PLUMBING VENTS SHALL EXTEND SIX INCHES ABOVE FLOOD LEVEL RIM OF FIXTURE SERVED BEFORE CHANGING FROM VERTICAL TO A HORIZONTAL POSITION.
23. REFRIGERANT PIPING AND INSULATION FROM CONDENSING UNIT TO EVAPORATOR COIL AND CONNECTION TO DRAIN PAN BY CONTROLLED TEMPERATURE CHAMBER MANUFACTURER.
24. REFERENCES TO LP DETAILS ARE SHOWN FOR EACH SPECIFIC CONDITION ON EACH LP FLOOR PLAN DRAWING. ONLY ONE REFERENCE IS SHOWN ON EACH FLOOR PLAN FOR A TYPICAL SITUATION.
25. PROVIDE CLEANOUTS AS REQUIRED IN ACCORDANCE WITH UNIFORM PLUMBING CODE OR LOCAL, STATE, FEDERAL AND HEALTH AUTHORITY. COORDINATE CLEANOUT ACCESS LOCATIONS WITH LABORATORY CASEWORK INSTALLATION.

FAXED

S. J. AMOROSO
Request For Information/Clarification

DSA FILE NO. 7-C1
DSA APPL. No. 01-106226

To: tBP/Architecture, 1000 Burnett Ave, Suite 140, Concord, CA 94520
Attn: Celia Chiang, Tom Beckett
Fax: 925-246-6495
Subj.: Lab vac piping size ½"
Reference (dwg, spec.) : LP drawings

Project: LOS MEDANOS COLLEGE SCIENCE BUILDING, Contra Costa Community College District
tBP p/n: 20247.00
RFI No: **219**
Subcontractor RFI: Dowdle 45

Reply Requested By: 5/23/06

INFORMATION REQUESTED: **Date:** 5/16/06

LP drawings indicate sizing of lab vac fixture Point of Connection to be ½". DSM recognizes the end of each branch line to be ½" (horizontal in clg and vertical in wall). Please confirm that this is the intent as no other sizing is shown.

SUGGESTED SOLUTION:

Cost Impact: ☐ **Schedule Impact:** ☐ days **By:** Mark Delgado

RESPONSE: **DATE:** 5.18.06

End of Lab Vac branch piping is 1/2". Please refer to General Note #13/LP1-00 for lab distribution pipe sizing guidelines.

Attachments: **By:** R. Cate/RFD

TRANSMITTAL RECORD:

FROM	TO	DATE
S.J. AMOROSO	tBP / ARCHITECTURE	~~4/4/06~~ 5.16.06
tBP / ARCHITECTURE	ENGINEER/CONSULTANT	5.16.06
ENGINEER/CONSULTANT	tBP / ARCHITECTURE	5.18.06
tBP / ARCHITECTURE	S.J. AMOROSO	5.18.06
S.J. AMOROSO	ORIGINATOR	

RFI # 000
Page 1

CC: DOWDLE

PIPING LEGEND

PIPING/ABBREVIATION	DESCRIPTION
BA	BLOWER AIR (LOW PRESSURE)
ICW	COLD WATER (INDUSTRIAL)
IHW	HOT WATER (INDUSTRIAL)
LA	LABORATORY AIR (15 psig)
LG	LABORATORY GAS
LV	LABORATORY VACUUM
LW	LABORATORY WASTE
LWV	LABORATORY WASTE VENT
DI	DEIONIZED WATER
TW	TEPID WATER

PLAN SYMBOL LEGEND

SYMBOL	ABBREVIATION	DESCRIPTION
	SK*	LABORATORY SINK (PROVIDED UNDER DIVISION 11)
	CS*	CUP SINK (PROVIDED UNDER DIVISION 11)
		PIPE DROP ENLOSURE (PROVIDED UNDER DIVISION 11)
		P–TRAP & TRAP ARM
	FD	FLOOR DRAIN (SHOWN FOR COORDINATION PURPOSES ONLY. REFER TO P–SERIES DRAWINGS.)
	FS	FLOOR SINK (SHOWN FOR COORDINATION PURPOSES ONLY. REFER TO P–SERIES DRAWINGS.)
		PIPING BELOW BENCH
		PIPING BELOW FLOOR
		PIPE CAPPED
		PIPE ELBOW UP (OR) UP & DOWN
		PIPE ELBOW DOWN
		PIPE TEE & ELBOW UP
		PIPE TEE & ELBOW DOWN
W		POINT OF CONNECTION TO 2" LABORATORY WASTE @ 6"A.F.F. & 1–1/2" LABORATORY WASTE VENT RISE @ 6"A.F.C. – U.O.N. (REFER TO P–SERIES DRAWINGS FOR CONTINUATION)
V		POINT OF CONNECTION TO 1–1/2" LABORATORY WASTE VENT RISE @ 6"A.F.C. (U.O.N.) (REFER TO P–SERIES DRAWINGS FOR CONTINUATION)
IW		POINT OF CONNECTION TO 2" VERTICAL FIXTURE DRAIN @ 6"A.F.F. (ISLAND FIXTURE WASTE) (REFER TO P–SERIES DRAWINGS FOR CONTINUATION)
IV		POINT OF CONNECTION TO 1–1/2" VERTICAL FIXTURE VENT @ 6"A.F.F. (ISLAND FIXTURE VENT) (REFER TO P–SERIES DRAWINGS FOR CONTINUATION)
		POINT OF CONNECTION TO VALVED AND CAPPED SERVICES (VALVES AND CAP PROVIDED UNDER DIVISION 15 P–SERIES DRAWINGS)
1		POINT OF CONNECTION NUMBER, COORDINATES PLAN WITH POINT OF CONNECTION SCHEDULE
1		SERVICE DROP NUMBER, COORDINATES PLAN WITH SERVICE DROP SCHEDULE
DETAIL NUMBER / DRAWING NUMBER		DETAIL REFERENCE BUBBLE COORDINATES PLAN WITH DETAIL SHEETS
	DH	DRENCH HOSE (EYEWASH)– INDUSTRIAL WATER (FITTING FURNISHED UNDER DIVISION 11 & INSTALLED UNDER DIVISION 15)
		LABORATORY GAS SHUTOFF VALVE BOX
		PRESSURE REDUCING VALVE
	A.F.F.	ABOVE FINISHED FLOOR
	A.F.C.	ABOVE FINISHED CEILING
	SIM.	SIMILAR
	TYP.	TYPICAL
	U.O.N.	UNLESS OTHERWISE NOTED

FIXTURE, SERVICE FITTING AND EQUIPMENT LEGEND

SKA
- DESIGNATES LABORATORY SINK
- DESIGNATES TYPES OF PLUMBING SERVICES REQUIRED AT SINK

CSA
- DESIGNATES CUP SINK
- DESIGNATES TYPES OF PLUMBING SERVICES REQUIRED AT CUPSINK

SF1
- DESIGNATES SERVICE FITTING STATION (FURNISHED UNDER DIVISION 11)
- DESIGNATES TYPES OF PLUMBING SERVICES REQUIRED

EQ1
- DESIGNATES EQUIPMENT STATION (FURNISHED UNDER DIVISION 11)
- DESIGNATES TYPES OF PLUMBING SERVICES REQUIRED

FIXTURE CONNECTION SCHEDULE

PIPE SIZE IN INCHES

FIXTURE/FITTING NO.	TW	ICW	IHW	DI	LG	LA	LV	LW(P–TRAP)
SKA		1/2						1 1/2
SKB		3/4						1 1/2
SKD		1/2	1/2					1 1/2
SKE	3/4	1/2	1/2					1 1/2
SKF	3/4	1/2	1/2	1/2				1 1/2
SKG		1/2	1/2	1/2				1 1/2
SKH		1/2			1/2		1/2	1 1/2
CSA		1/2						1 1/2
CSB		1/2			1/2	1/2	1/2	1 1/2
CSC		1/2			1/2		1/2	1 1/2

SERVICE FITTING SCHEDULE

PIPE SIZE IN INCHES

SERVICE FITTING	TW	ICW	IHW	DI	LG	LA	LV	BA
SF1	1 1/4							
SF2					1/2			
SF3							1/2	
SF4								2
SF5					1/2		1/2	
SF6							1/2	2
SF7					1/2	1/2	1/2	
SF8		3/4	3/4					
SF9		1/2						
SF10				1/2				

EQUIPMENT CONNECTION SCHEDULE

PIPE SIZE IN INCHES

EQUIPMENT NO.	TW	ICW	IHW	DI	LG	LA	LV
EQ1A (GLASSWARE WASHER)		1/2	1/2				
EQ1B (GLASSWARE WASHER)		1/2	1/2	1/2			
EQ2 (20"x20"x38" STERILIZER)		1	1/2				
EQ3 (16"x16"x26" STERILIZER)		1	1/2				

SERVICE DROP SCHEDULE

PIPE SIZE IN INCHES

DROP NUMBER	TW	ICW	IHW	DI	LG	LA	LV	BA
1	3/4	3/4	1/2	1/2				
2		3/4						
3					1/2			
4	3/4	3/4	1/2		1/2			
4A	3/4	1/2	1/2		1/2			
5	3/4	3/4	3/4	1/2				
5A	3/4	3/4	3/4	3/4				
6					3/4			
7		1/2	1/2		1/2		1/2	
7A		1/2	1/2		1/2		3/4	
8					1/2		1/2	
9	3/4	3/4	3/4	1/2				
10		1/2	1/2				3/4	2
11		1/2	1/2				1	2
12		3/4						
13		1 1/4			1	1	1 1/2	
14		1			3/4	1/2	1	
15		1			1/2	1/2	1	
16	3/4	3/4	3/4	3/4				
17							3/4	2

FAXED

S. J. AMOROSO
Request For Information/Clarification

DSA FILE NO. 7-C1
DSA APPL. No. 01-106226

To: tBP/Architecture, 1000 Burnett Ave, Suite 140, Concord, CA 94520
Attn: Celia Chiang, Tom Beckett
Fax: 925-246-6495
Subj.: DI water system
Reference (dwg, spec.) : LP drawings

Project: LOS MEDANOS COLLEGE SCIENCE BUILDING, Contra Costa Community College District
tBP p/n: 20247.00
RFI No: **220**
Subcontractor RFI: Dowdle 46

Reply Requested By: 5/23/06

INFORMATION REQUESTED: **Date:** 5/16/06

Please confirm that the DI water system is complete as shown on the LP drawings and confirm that a full loop system is not required.

SUGGESTED SOLUTION:

Cost Impact: ☐ **Schedule Impact:** ☐ days **By:** Mark Delgado

RESPONSE: **DATE:** 5.18.06

Provide single DI line as indicated on the LP and P series drawings.
Full loop system not required.

Attachments: **By:** R. Cate/ RFD

TRANSMITTAL RECORD:

FROM	TO	DATE
S.J. AMOROSO	tBP / ARCHITECTURE	~~4/4/06~~ 5.16.06
tBP / ARCHITECTURE	ENGINEER/CONSULTANT	5.16.06
ENGINEER/CONSULTANT	tBP / ARCHITECTURE	5.18.06
tBP / ARCHITECTURE	S.J. AMOROSO	5.18.06
S.J. AMOROSO	ORIGINATOR	

RFI # 000
Page 1

CC: DOWDLE

tBP
architecture
planning
interiors
management

LICENSED ARCHITECT · RICHARD A. MANGUM, AIA · NO. C-8885 · REN. 12-31-05 · STATE OF CALIFORNIA

tBP/Architecture
1000 Burnett Avenue, Suite 140
Concord, CA 94520
p: 925.246.6419 f: 925.246.6495

REGISTERED PROFESSIONAL ENGINEER · EMIL SANDRU · NO. 26888 · Exp. 12/06 · MECHANICAL · STATE OF CALIFORNIA

RFD
RESEARCH FACILITIES DESIGN
3965 Fifth Avenue, Suite 300
San Diego, California 92103
TEL 619 · 297 · 0159
FAX 619 · 294 · 4901

IDENTIFICATION STAMP
DIV. OF THE STATE ARCHITECT
OFFICE OF REGULATION SERVICES
APPL · 01-106226
AC FLS SS
DATE 1-11-05

name
address
city, state, zip
ph: fx:

SCIENCE BUILDING
LOS MEDANOS COLLEGE
Contra Costa Community College District

tBP project number : 20247.00
file name: LP1-00
drawn by: RC checked by: ES
date: NOVEMBER 15, 2004

Rev.	date	description

drawing title:
SYMBOLS, GENERAL NOTES, & SCHEDULES
LMC SCIENCE 313-023-112.01-0-00.00
drawing no.:
LP1-00

PIPING POINT OF CONNECTION SCHEDULE

ROOM NAME	ROOM NO.	POC NO.		TW GPM	ICW GPM	IHW GPM	DI GPM	LG sCFH	LA sCFM	LV sCFM	BA
FIERST FLOOR											
ANATOMY LAB/CADAVER	132/33	1.1	DESIGN FLOW	20.0	5.0	5.0					
			PIPE SIZE (IN)	1 1/4	3/4	3/4					
MAJORS BIOLOGY LAB	143	1.2	DESIGN FLOW	20.0	7.0	1.5	1.0	8.0		1.0	
			PIPE SIZE (IN)	1 1/4	1	1/2	1/2	1/2		3/4	
ANATOMY LAB	132	1.3	DESIGN FLOW	3.0	1.5	1.5					
			PIPE SIZE (IN)	3/4	1/2	1/2					
MAJORS BIOLOGY LAB/PLANT STUDY	143/44	1.4	DESIGN FLOW	3.0	7.0	3.0		8.0			
			PIPE SIZE (IN)	3/4	1	3/4		1/2			
PREP/STOCK ROOM	145	1.5	DESIGN FLOW	20.0	5.0	4.0	1.0	4.0		1.0	
			PIPE SIZE (IN)	1 1/4	3/4	3/4	1/2	1/2		3/4	
MICROBIOLOGY/MICROPHYSIOLOGY LAB	129	1.6	DESIGN FLOW	20.0	3.0	1.5	1.0	76.0		1.0	
			PIPE SIZE (IN)	1 1/4	3/4	1/2	1/2	1		3/4	
GENERAL BIOLOGY LAB	148	1.7	DESIGN FLOW	20.0	4.0	1.5	1.0	8.0		2.0	
			PIPE SIZE (IN)	1 1/4	3/4	1/2	1/2	1/2		3/4	
MICROBIOLOGY/MICROPHYSIOLOGY LAB	129	1.8	DESIGN FLOW	3.0	3.0	3.0	1.0				
			PIPE SIZE (IN)	3/4	3/4	3/4	1/2				
GENERAL BIOLOGY LAB	148	1.9	DESIGN FLOW		3.0	3.0		8.0		1.5	
			PIPE SIZE (IN)		3/4	3/4		1/2		3/4	
MICRO PREP/STOCK /AUTOCLAVE RM/ PREP RM	125/27/28	1.10	DESIGN FLOW	20.0	35.0	7.0	5.0	4.0		1.0	
			PIPE SIZE (IN)	1 1/4	1 1/2	1	3/4	1/2		3/4	
SECOND FLOOR											
CHEMISTRY PREP/STOCK ROOM	236	2.1	DESIGN FLOW	20.0	5.0	3.0	1.0	12.0	2.0	2.0	
			PIPE SIZE (IN)	1 1/4	3/4	3/4	1/2	1/2	1/2	3/4	
GEN. CHEM./INSTR. ROOM	242/43	2.2	DESIGN FLOW	20.0	32.0	3.0	2.0	84.0	24.0	16.0	
			PIPE SIZE (IN)	1 1/4	1 1/2	3/4	1/2	1	1 1/4	2	
ORGANIC CHEMISTRY LAB	235	2.3	DESIGN FLOW	20.0	28.0	4.0	3.0	64.0	16.0	12.0	
			PIPE SIZE (IN)	1 1/4	1 1/2	3/4	3/4	1	1	1 1/2	
INSTRUMENT ROOM	233	2.4	DESIGN FLOW	20.0							
			PIPE SIZE (IN)	1 1/4							
STRENGTH AND ENGINEERING LAB	245	2.4A	DESIGN FLOW	5.0	3.0	3.0					
			PIPE SIZE (IN)	3/4	3/4	3/4					
PHYSICAL SCIENCES PREP/STOCK ROOM	246	2.5	DESIGN FLOW	3.0	1.5	1.5				1.0	
			PIPE SIZE (IN)	3/4	1/2	1/2				3/4	2
PHYSICS LAB/DARK ROOM	249/48	2.6	DESIGN FLOW		3.0	3.0				4.0	
			PIPE SIZE (IN)		3/4	3/4				1	2
PHYSICS LAB	249	2.7	DESIGN FLOW		1.5	1.5				4.0	
			PIPE SIZE (IN)		1/2	1/2				1	2

NOTES
1. TW–TEPID WATER FOR SAFTEY SHOWER/EYE WASH– INSTANTANEOUS/ACCIDENTAL USE.
2. FLOW RATES REPRESENT PEAK LABORATORY LOADS USED FOR PIPE SIZING AT POC. DIVERSITIES SHOULD BE APPLIED FOR SIZING FLOOR AND BUILDING SYSTEMS AND EQUIPMENT.
3. BA PIPING SHOWN FOR REFERENCE ONLY. 2" PVC PIPE ROUTED DIRECTLY TO SERVICES. PROVIDE SHUT OFF VALVE AT EACH SERVICE. SEE P–SERIES DRAWING FOR PIPING LAYOUT. BA SOURCE: AIR BLOWER LOCATED IN PHYSICAL SCIENCES PREP/STOCK ROOM 246.

RFI 301

ESTIMATED DI WATER CONSUMPTION AND PEAK LOAD	GAL	GPM
DI WATER HOURLY CONSUMPTION	50	
DI WATER 4-HOUR CONSUMPTION	200	
DI WATER PEAK FLOW RATE		6

S. J. AMOROSO
Request For Information/Clarification

DSA FILE NO. 7-C1
DSA APPL. No. 01-106226

To: tBP/Architecture, 1000 Burnett Ave, Suite 140, Concord, CA 94520
Attn: Celia Chiang, Tom Beckett
Fax: 925-246-6495
Project: LOS MEDANOS COLLEGE SCIENCE BUILDING, Contra Costa Community College District
tBP p/n: 20247.00
Subj.: Blower air equipment and type of piping
RFI No: 301
Reference (dwg, spec.): LF2-1, LP1-01
Subcontractor RFI: Dowdle 55
Reply Requested By: 8/3/06

INFORMATION REQUESTED: Date: 7/27/06

Per sheet LF2-1, the blower air equipment located in room 246 is OFOI. Per sheet LP1-01, the blower air piping is to be PVC. Please confirm piping type, as PVC is not flame retardant material. Also, please provide cut sheet for blower air equipment so that rough-in can proceed.

SUGGESTED SOLUTION:
Cost Impact: ☐ Schedule Impact: ☐ days By: Justin Warren

RESPONSE: DATE:

From our discussion with Ainsworth Associates, it has been confirmed that the piping is routed through re-circulated air plenum. The code imposes a minimum 25/50 fire/smoke rating for piping materials.
The total length of the 2" piping within the ceiling is 87 ft. The following solutions can be implemented: 1. Use PVC rated piping.
2. Wrap PVC piping in fire insulating material.
Since the blower is an OFOI piece of equipment, Owner will need to provide info on exact type they plan on using. Attached is a cut sheet of a blower air for reference only.
Richard Cate/RFD - 8/03/06

After discussion with Dave Weston/AAME, the option of using PVC rated piping is considered more desirable. Provide submittal of PVC rated piping for review.
Cut sheet of exact type OFOI blower is to follow with completed OFOI equipment list.
Vanessa Ling/tBP - 8/03/06

RFI # 000
Page 1

Dowdle & Sons Mechanical, Inc.
P.O. Box 3316
Napa, CA 94558
Ph : (707)224-6968

RFI

To: Mark Delgado, SJ Amoroso, 390 Bridge Parkway, Redwood Shores, CA 94065, Ph: 925-427-7567 Fax: 925-427-7570
RFI #: 55
Date: 7/26/2006
Job: 437 Los Medanos College
Phone: 925-427-7567
CC:
Subject: Blower Air Piping / PVC
Drawing: LP1-01
Spec Section:
Cost Impact:
Schedule Impact:

Request: Date Required: 8/2/2006
On LP1-01 Note 3 describes Blower Air Piping to be installed in PVC. We would like to confirm that this is correct, as PV is a not a flame retardant material. In addition, please provide cutsheet for Blower Air Equipment to properly rough-in.

Requested by: Staci Freeman, Dowdle & Sons Mechanical, Inc

Response:

Answered By
Company
Date

Page 1 of 1

Republic Regenerative Blowers - General Information Page 1 of 2

Republic Regenerative Blowers

Single Stage

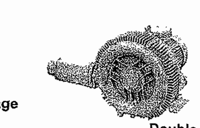
Double Stage

Republic Regenerative Blowers are available in either single (one impeller) or double (two impeller) stage configurations. The impeller is directly connected to the motor shaft, providing powerful force without undue friction. The bearings are outside the compression chamber, ensuring maximum operational reliability under high differential pressure. This low-maintenance, oil-free design provides continuous, dependable service to our customers.

Functional Performance

Air Flow: From 50 cfm up to 776 cfm
Pressure Capacity: From 47" H_2O up to 307" H_2O
Vacuum Capacity: From 40" H_2O up to 235.22" H_2O

Operating Principle

Air or gas is pulled into a side channel (1) through the air inlet (2) and is accelerated by an impeller (3) rotating inside the impeller chamber (4). The resulting pressurized air or gas is discharged through the exhaust outlet (5). This type of operation is also known as a "ring" blower design.

1. *Side Channel*
2. *Air Inlet*
3. *Impeller*
4. *Impeller Chamber*
5. *Exhaust Outlet*

Design Advantages

Continuous, Low-maintenance Operation
Low Noise (60 - 90 dB)
Saves Space and Electricity
Trouble-free Installation (mounts in any axial direction)
Easy Replacement of Parts

Applications

Pneumatic Conveying Systems
Parts Handling with Vacuum Systems
Packaging
Sewage Treatment (Aeration) Systems
Bottling
Fulfillment
Thermal Forming
Textile Manufacturing
Paper Manufacturing
Fish Pond Aeration
Powder Transportation (Compression)
Printing

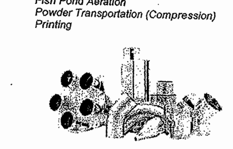

Accessories

Centrifugal Blowers
Air Knives (Aluminum and Stainless Steel)
Stainless Steel Y-branches, Elbows, Hose

file://Z:\Engineering\EQUIPMENT\Air Tracks\Regenerative Blowers and Air Knives files\... 8/1/2006

Republic Regenerative Blowers - General Information Page 2 of 2

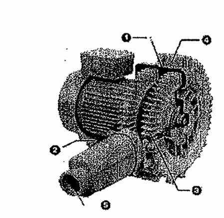

Maintenance

Cleaning: When dust or residue is evident, clean the entire surface of the blower.
Lubrication: After approximately 20,000 hours of operation, or 18 months, replace the grease in the bearings.

Installation

Units can be installed and mounted in any axial direction. For quiet and vibration-free operation, install the unit over a rubber pad. Do not obstruct the cooling system of the motor. Keep all ventilation gratings open and clear. Minimum clearance (1.5") must be maintained between the unit and all side walls or other barriers. Keep all flammable gases and materials away from the unit. After installation be sure to tighten the eye-bolt. The system voltage and frequency is the same as stated on the rating plate +/-5% voltage and/or +/-2% frequency deviation from the rated value without reducing output. Connections should be arranged and attached according to the circuit diagram on the terminal box. The ground wire should be connected to the grounding terminal.

Clamps, and Piping
Stainless Steel Nozzles
Stainless Steel Air Knife Support Brackets
Air Knife and Blower/Motor Enclosures Available in Powder Coated or Stainless Steel Design
Stainless Steel 3, 4, 5 and 6 Outlet Manifolds
Stainless Steel HEPA Filters for Clean Room Environments

General Notice

Republic Regenerative Blowers are designed for handling air and nonflammable, non-corrosive, non-explosive gases. These blowers are designed for continuous use. Applications involving frequent temperature changes should be evaluated by our technical department prior to installation. Maximum ambient temperature at the inlet is 104 °F (40°C). Intake filtration should be used to eliminate solids and impurities from entering the blower.

Call today for help with your application.

Toll-Free 1-800-847-3080
Or e-mail sales@republicblower.com

REPUBLIC
Blower Systems

Republic Sales & Manufacturing Company
5131 Cash Road, Dallas, TX 75247
Tel 214-631-8070 • Fax 214-631-3673

file://Z:\Engineering\EQUIPMENT\Air Tracks\Regenerative Blowers and Air Knives_files\... 8/1/2006

tBP
architecture
planning
interiors
management

tBP/Architecture
1000 Burnett Avenue, Suite 140
Concord, CA 94520
p: 925.246.6419 f: 925.246.6495

LICENSED ARCHITECT • STATE OF CALIFORNIA

REGISTERED PROFESSIONAL ENGINEER
EMIL SANDRU
NO. 32888
MECHANICAL
STATE OF CALIFORNIA

RFD
RESEARCH FACILITIES DESIGN

IDENTIFICATION STAMP
DIV. OF THE STATE ARCHITECT
OFFICE OF REGULATION SERVICES
APPL. 01-106226
DATE 1-13-05

name
address
city, state, zip
ph fx

SCIENCE BUILDING
LOS MEDANOS COLLEGE
Contra Costa Community College District

tBP project number : 20247.00
file name: LP1-01
drawn by:
checked by:
date: NOVEMBER 15, 2004

Rev.	date	description

drawing title:
LABORATORY PLUMBING SCHEDULES

LMC SCIENCE 313-023-112.01-0-00.00
drawing no.:
LP1-01

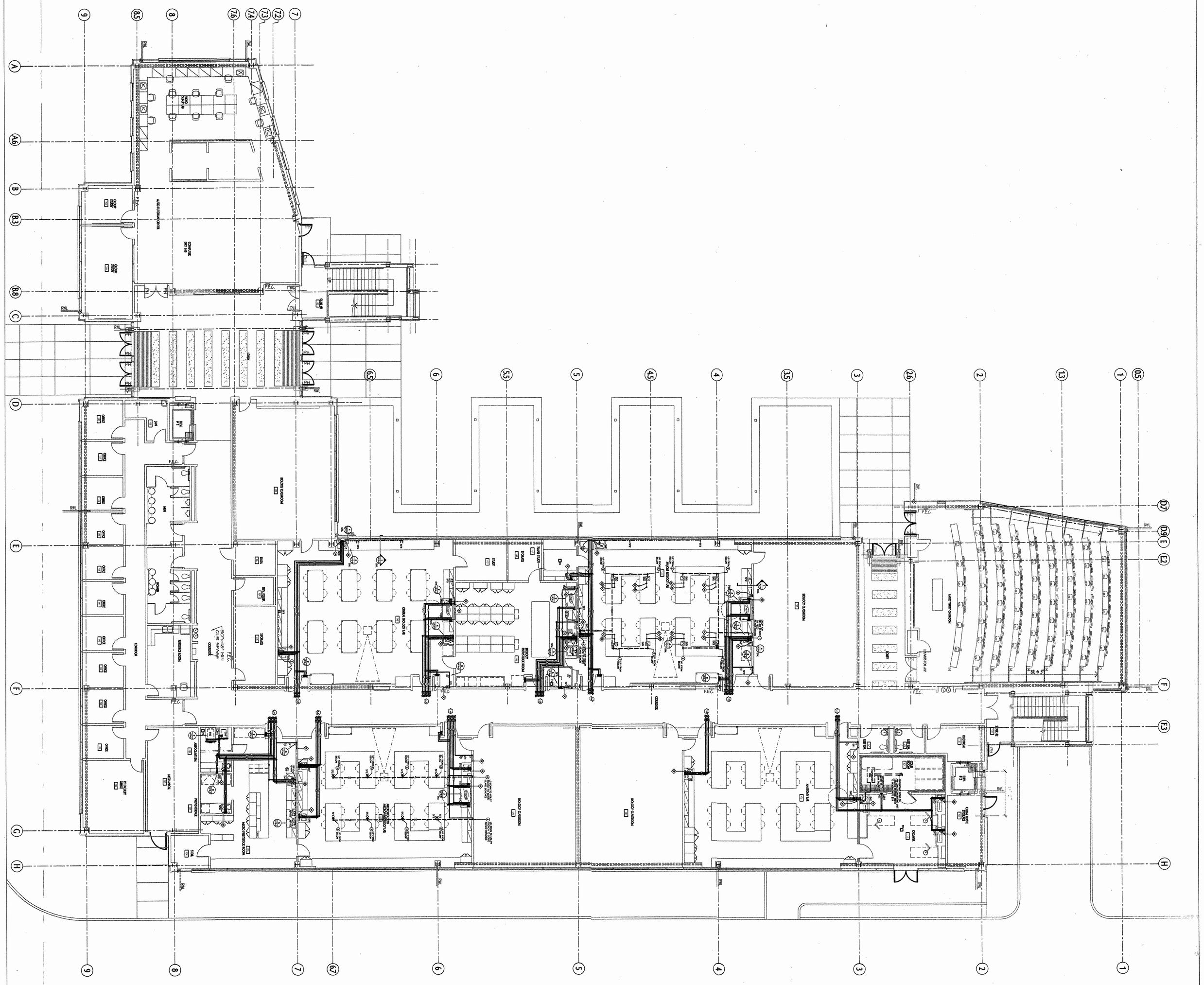

FIRST FLOOR ASF PLAN

SCALE: 1/32" = 1'-0"

1

TRUE NORTH

DESIGN NORTH

drawing title: FIRST FLOOR PLAN PART "A"

LMC SCIENCE 313-023-112.01-0-00.00

drawing no: LP1-1

Rev	date	description

date: NOVEMBER 15, 2004

drawn by: RO checked by: ES

file name: LP1-1

tBP project number : 2024100

SCIENCE BUILDING
LOS MEDANOS COLLEGE

Contra Costa Community College District

IDENTIFICATION STAMP
DIV. OF THE STATE ARCHITECT
OFFICE OF REGULATION SERVICES

APPL - 01-106226

AC FLS SS

DATE 1-12-05

name
address
city, state, zip
ph: fx:

REGISTERED PROFESSIONAL ENGINEER
EMIL SANDRU
NO. 26888
Exp. 12-06
MECHANICAL
STATE OF CALIFORNIA

RFD
RESEARCH FACILITIES DESIGN
3985 Fifth Avenue, Suite 300
San Diego, California 92103
TEL 619 · 297 · 0159
FAX 619 · 294 · 4901

LICENSED ARCHITECT
RICHARD A. MANDURK, A.I.A.
NO. C-8685
REN. 12-31-05
STATE OF CALIFORNIA

tBP/Architecture
1000 Burnett Avenue, Suite 140
Concord, CA 94520
p: 925.246.6419 f: 925.246.6495

tBP
architecture
planning
interiors
management

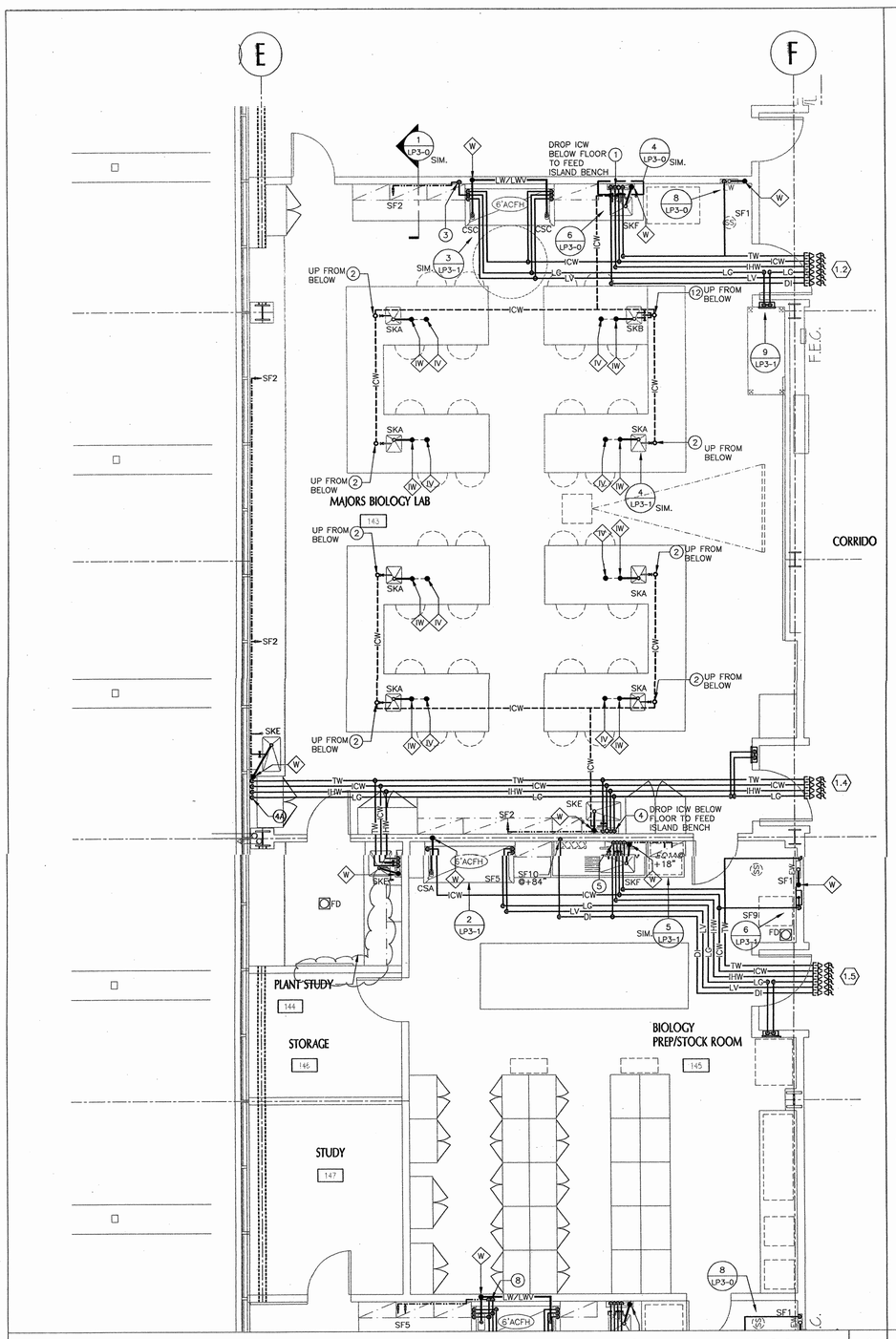

MAJORS BIOLOGY LABORATORY AND PREP/STOCK RM. 1
SCALE: 1/4"=1'-0"

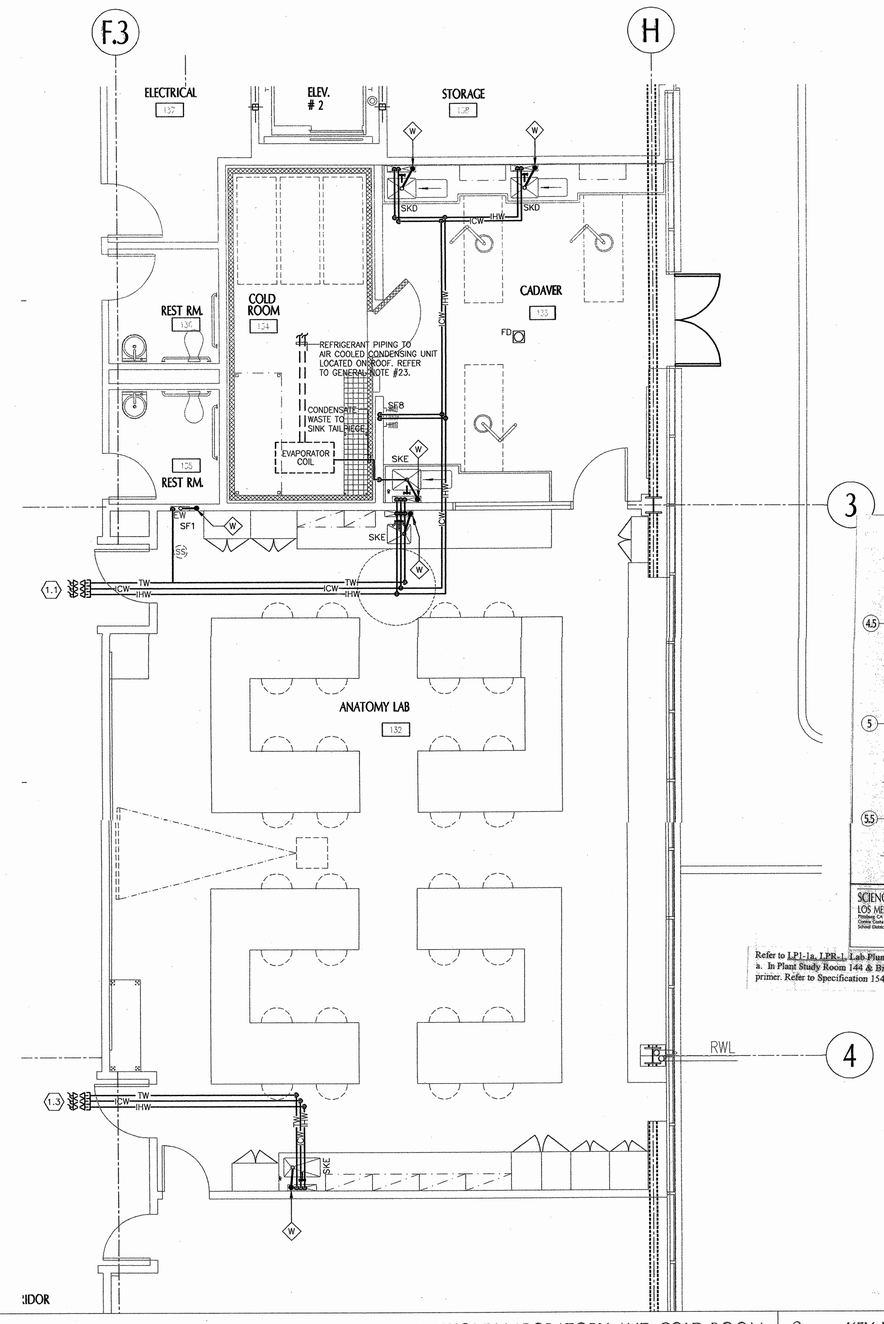

ANATOMY LABORATORY AND COLD ROOM 2 KEY PLAN
SCALE: 1/4"=1'-0"

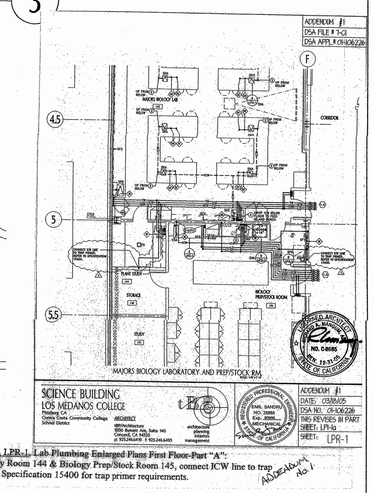

Refer to LP1-1a, LPR-1, Lab Plumbing Enlarged Plans First Floor-Part "A":
a. In Plant Study Room 144 & Biology Prep/Stock Room 145, connect ICW line to trap primer. Refer to Specification 15400 for trap primer requirements.

ADDENDUM No. 1

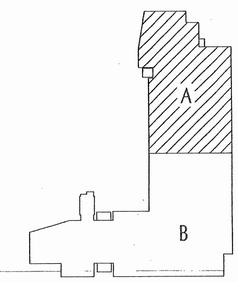

tBP
architecture
planning
interiors
management

tBP/Architecture
1000 Burnett Avenue, Suite 140
Concord, CA 94520
p: 925.246.6419 F: 925.246.6495

RFD
RESEARCH FACILITIES DESIGN
1000 Burnett Avenue, Suite 210
Concord, California 94520
FAX: 925 . 246 . 6495
Sun Chon, California 92020
FAX: 619 . 297 . 9009
FAX: 619 . 264 . 0501

IDENTIFICATION STAMP
DIV. OF STATE ARCHITECT
OFFICE OF REGULATION SERVICES
APR. - 5 2005
DATE

name
address
city, state, zip
phone

SCIENCE BUILDING
LOS MEDANOS COLLEGE

Contra Costa Community College District

tBP project number : 20241.00
file name: LP1-1
drawn by: RC checked by: ES
date: NOVEMBER 15, 2004

Rev:	date:	description:

drawing title:
ENLARGED PLANS
FIRST FLOOR - PART "A"

LMC SCIENCE 313-023-112.01-0-00.00
drawing no:
LP1-1a

S. J. AMOROSO
Request For Information/Clarification

DSA FILE NO. 7-C1
DSA APPL. No. 01-106228

To: ISP/Architecture
1000 Burnett Ave, Suite 140
Concord, CA 94520

Attn: Colla Chiang, Tom Bechtel
Fax: 925-245-9495

Subj.: U.C. Glass Washers

Reference (dwg. spec): A1.2

Project: LOS MEDANOS COLLEGE
SCIENCE BUILDING
Contra Costa Community College District

ISP p/n: 20247.00

RFI No: **96**

Subcontractor RFI: Dowdle #25

Reply Requested By: 1/18/06

Date: 1/12/06

INFORMATION REQUESTED:
Please note the attached Dowdle and Sox's RFI No. 25 regarding the 2 U.C. Glass Washers shown in room 125. SLP3-1 and PL3 show this are differently. Also in both glass wash discharge hoses terminate into the same sink tailpiece. Please advise

SUGGESTED SOLUTION:

Cost Impact: ☐ Schedule Impact: ☐ days By: Justin Warren

RESPONSE: DATE: 1/18/06

LOCATION CORRECT AS SHOWN ON LP & LP DRAWINGS. IN ROOM 125, ONLY ONE OF THE W/C GLASSWASHER WHERE DISCHARGE TO SINK TAILPIECE MAKES SENSE BECAUSE THE OTHER W/C GLASSWASHER WHERE DISCHARGE TO BE ROUTED TO THE SINK TAILPIECE LOCATED IN ROOM 129 (SEE ATTACHED SKETCH)

Attachments:

By: T. CHIU/HKA

TRANSMITTAL RECORD: FROM	TO	DATE
S.J. AMOROSO	ISP / ARCHITECTURE	1/12/06
ISP / ARCHITECTURE	ENGINEER/CONSULTANT	
ENGINEER/CONSULTANT	ISP / ARCHITECTURE	
ISP / ARCHITECTURE	S.J. AMOROSO	
S.J. AMOROSO	ORIGINATOR	

cc: DOM BREZAIFNED

RFI # 000
Page 1

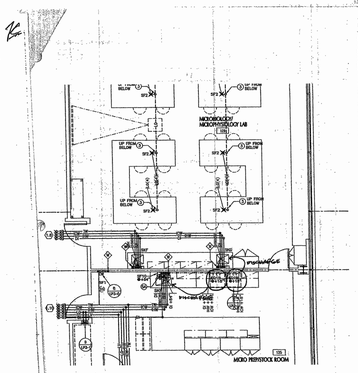

Dowdle & Sons Mechanical, Inc.
P.O. Box 970
Napa, CA 94558
Ph. (707)224-0906

RFI

To: Mark Delgado
SJ Amoroso
300 Ellinwood Way
Pleasant Hills, CA. 94523
Ph.925-421-7001 Fax 925-421-7070

RFI #: 25
Date: 1/10/2006
Job: 457 Los Medanos College
Phone: 925-421-7001

CC: Dowdle, Andy (Dowdle & Sons Mechanical, Inc), Dwadley, Matt (Dowdle & Sons Mechanical, Inc), Tows, Greg (Dowdle & Sons Mechanical, Inc)

Subject: Room 125

Drawing: LP1-1b Spec Section:

Cost Impact: Schedule Impact:

Description: Date Required: 1/13/2006
Lab LP1b/1b Rooms 123 & 7 and 7.7 has U.C. Glass washers are shown. SLP3-1 depicts waste piping and dir pipe being at adjacent sink. Clarify drawing flip and is not adjacent to the glass washer. This affects how what is shown on P.L3. In addition, do both glass wash discharge hoses terminate into the same sink tailpiece? Please confirm.

Requested by: Brad Freeman
Dowdle & Sons Mechanical, Inc.

Response:

Answered By:

Company Date

Page 1 of 1

BULLETIN #56
DSA FILE 7-C1
DSA APPL # 01-106228

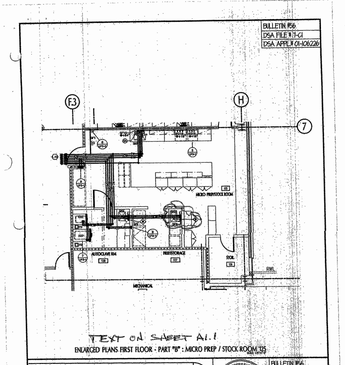

TEXT ON SHEET A1.1

ENLARGED PLANS FIRST FLOOR - PART "B" : MICRO PREP / STOCK ROOM 125

SCIENCE BUILDING
LOS MEDANOS COLLEGE
Pittsburg, CA
Contra Costa Community College District

ARCHITECT
ISP/Architecture
1000 Burnett Ave, Suite 140
Concord, CA 94520
p. 925.245.9495 f. 925.245.9495

BULLETIN #56
DATE: 1/16/07
DSA NO.: 01-106228
THIS REVISES IN PART
SHEET: LP1.1b
SHEET: SKLP-56.1

Los Medanos College
4CD Proj.# : L-565-B-23-SC
Science Building

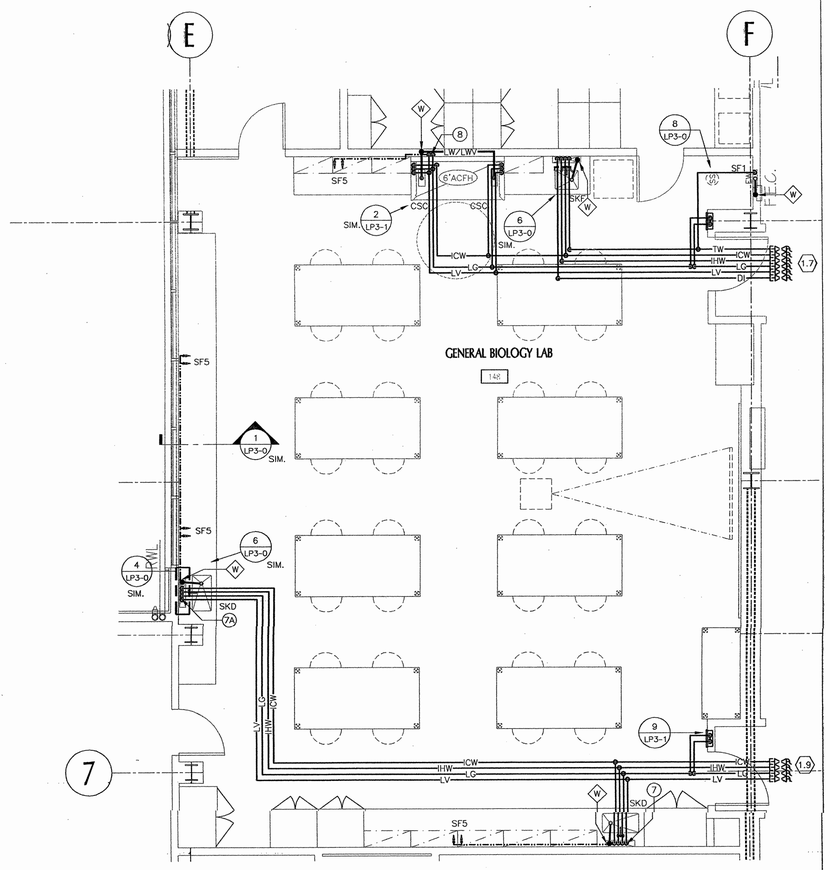

GENERAL BIOLOGY LABORATORY | 1
SCALE: 1/4"=1'-0"

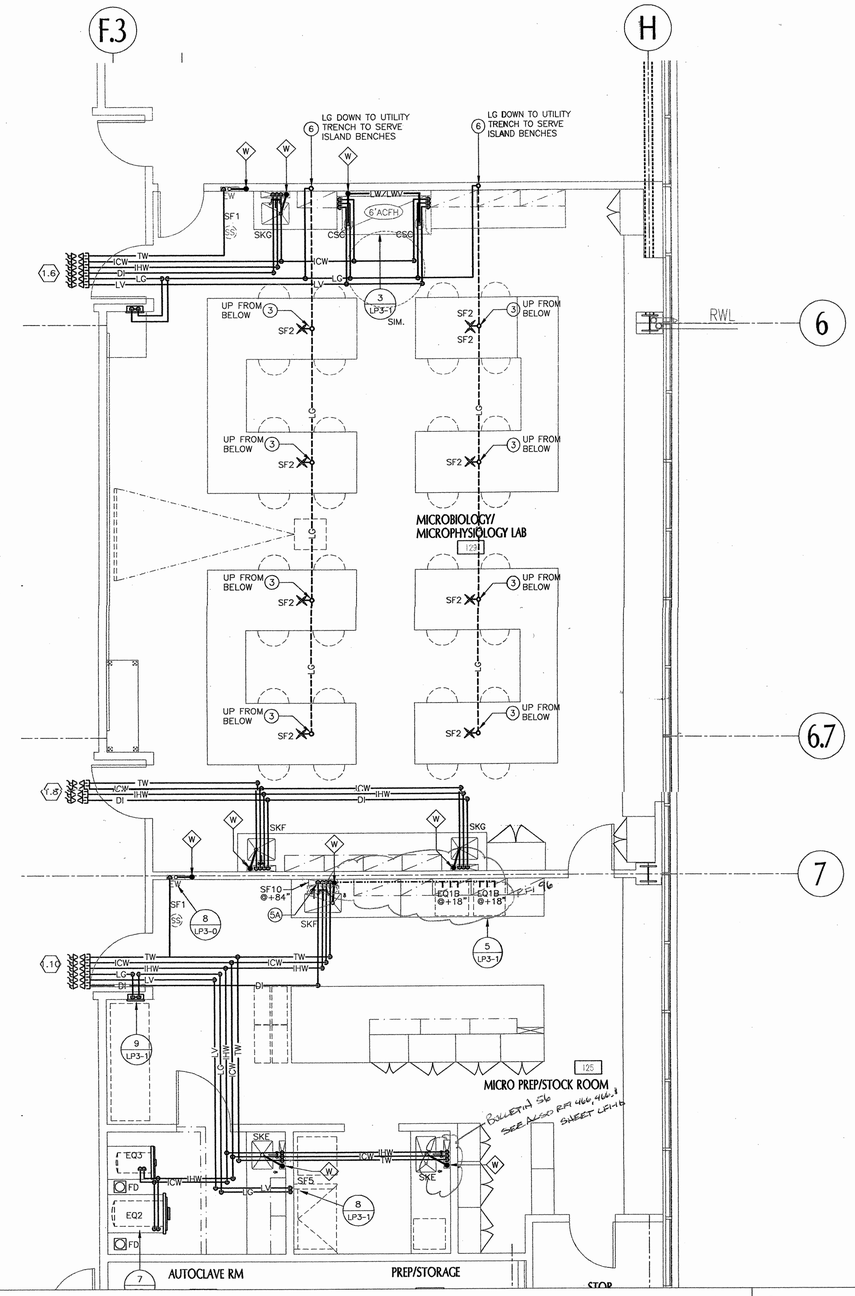

MICROPHYSIOLOGY LABORATORY AND PREP/ STOCKROOM | 2
SCALE: 1/4"=1'-0"

KEY PLAN

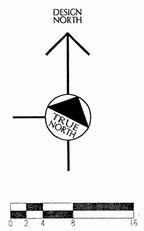

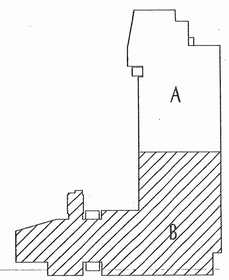

tBP
architecture
planning
interiors
management

tBP/Architecture
1000 Burnett Avenue, Suite 140
Concord, CA 94520
p: 925.246.6419 f: 925.246.6495

REGISTERED PROFESSIONAL ENGINEER
EMIL SANDRU
NO. 28888
EXP. 12-31-05
MECHANICAL
STATE OF CALIFORNIA

RFD
RESEARCH FACILITIES DESIGN
1960 East Grand Avenue, Suite 930
San Diego, California 92203
P.619 . 294 . 4001
F.619 . 294 . 4005

DOR/DSA/OPSC STAMP
DIV. OF ARCHITECT
OFFICE OF REGULATION SERVICES
APPL. - 015-92025
DATE 1-12-05

name
address
city, state, zip
pH: fax

SCIENCE BUILDING
LOS MEDANOS COLLEGE

Contra Costa Community College District

tBP project number : 20241.00
file name: LP1-1
drawn by: RC checked by: ES
date: NOVEMBER 15, 2004

Key	date:	description:

drawing title:
ENLARGED PLANS
FIRST FLOOR - PART "B"

LMC SCIENCE 313-023-112.01-0-00.00
drawing no:
LP1-1b

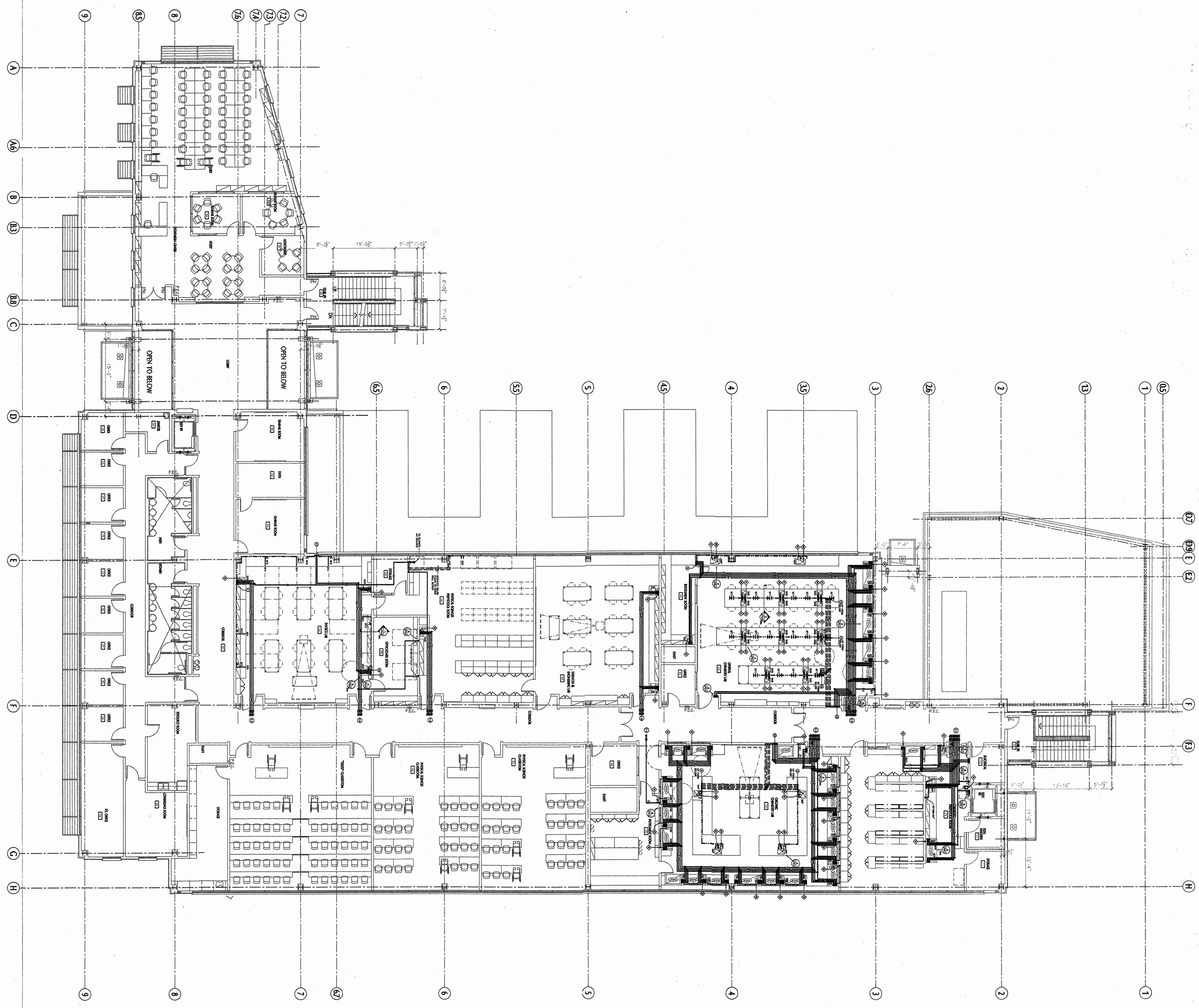

SECOND FLOOR ASF PLAN
SCALE: 3/32" = 1'-0"

1

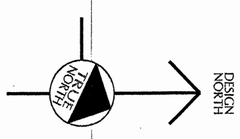

SCIENCE BUILDING
LOS MEDANOS COLLEGE

Contra Costa Community College District

IDENTIFICATION STAMP
DIV. OF THE STATE ARCHITECT
OFFICE OF REGULATION SERVICES
APPL - 01-106226
AC ___ RS ___ SS ___
DATE 1-12-05

name
address
city, state, zip
ph: fx:

REGISTERED PROFESSIONAL ENGINEER
EMIL SANDRU
NO. 26888
Exp. 06-06
MECHANICAL
STATE OF CALIFORNIA

RFD
RESEARCH FACILITIES DESIGN
3965 Fifth Avenue, Suite 300
San Diego, California 92103
TEL 619 · 297 · 0159
FAX 619 · 294 · 4901

LICENSED ARCHITECT
RICHARD A. MANGUM AIA
NO. C-8685
REN. 12-31-05
STATE OF CALIFORNIA

tBP/Architecture
1000 Burnett Avenue, Suite 140
Concord, CA 94520
p: 925.246.6419 f: 925.246.6495

tBP
architecture
planning
interiors
management

tBP project number : 2024100
file name: LP2-1
drawn by: RC checked by: ES
date: NOVEMBER 15, 2004

rev.	date:	description:

drawing title: SECOND FLOOR PLAN PART "A"
LMC SCIENCE 313-023-112.01-0-00.00
drawing no: LP2-1

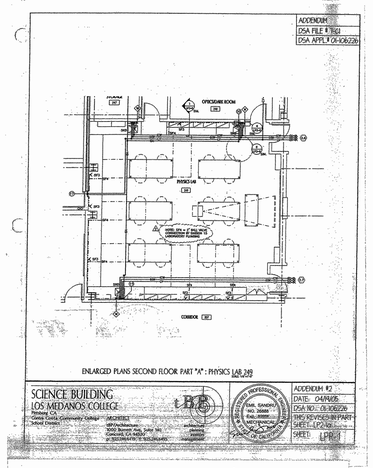

S. J. AMOROSO
Request For Information/Clarification

DSA FILE NO. 7-C1
DSA APPL. No. 01-106226

To: tBP/Architecture, 1000 Burnett Ave, Suite 140, Concord, CA 94520
Attn: Celia Chiang, Tom Beckett
Fax: 925-245-6495
Project: LOS MEDANOS COLLEGE SCIENCE BUILDING, Contra Costa Community College District
tBP job: 20247.00
Subj.: PRVs on LP drawings
RFI No: **387**
Reference (dwg, spec.): LP2-1A, LP1-01
Subcontractor RFI:

Reply Requested By: 10/26/06

INFORMATION REQUESTED: Date: 10/1/06 tBP received 10/19/06

See attached Dowdle RFI No. 66 regarding PRV's on air lines that are not clearly identified. Please review and provide flame valves.

SUGGESTED SOLUTION:
Cost Impact: ☐ Schedule Impact: ☐ days By: Mark Delgado

RESPONSE: DATE:

Refer to spec section 15410-5, 2.02. C.2 for pressure reducing valve requirements.

Richard Cate/RFD - 10/23/06

cc: Dowdle

RFI # 000
Page 1

Dowdle & Sons Mechanical, Inc.
P.O. Box 3916
Napa, CA 94558
Ph: (707)224-8868

RFI

To: Mark Delgado, SJ Amoroso, 300 Bridge Parkway, Redwood Shores, CA 94065, Ph: 925-421-7567 Fax: 925-421-7570
RFI #: 66
Date: 10/19/2006
Job: 437 Los Medanos College
Phone: 925-427-7567

CC:

Subject: Pressure Reducing Valve

Drawing: LP2-1A
Cost Impact:
Spec Section:
Schedule Impact:

Request: Date Required: 10/26/2006
On SKLP2-1A F.3 and 2.4 POC 2.1 is shown. Downstream of the lab air shut-off is a control which is described as a Pressure Reducing Valve on PI-05. On LP1-01 POC 2.1 describes the Lab Air as 1/2" pipe with 2.5 CFM. Additionally POC 2.2 and 2.3 have the same symbol and are 1 1/4" pipe (24.0 CFM) and 1" pipe (16.0 CFM) respectively. CSM cannot find description of the PRV or who is to provide it. Please provide a cutsheet or the PRV itself, in order to proceed with the Lab Air piping.

Requested by: Staci Freeman
Dowdle & Sons Mechanical, Inc.

Response:

Answered By
Company
Date

10/26/2006 13:38 7072247805 PAGE 02/03

RFI 387.1

Dowdle & Sons Mechanical, Inc.
P.O. Box 3916
Napa, CA 94558
Ph: (707)224-8868

RFI

DISTRIBUTED 10/26/06 RFD

To: Mark Delgado, SJ Amoroso, 300 Bridge Parkway, Redwood Shores, CA 94065, Ph: 925-421-7567 Fax: 925-421-7570
RFI #: 66
Date: 10/19/2006
Job: 437 Los Medanos College
Phone: 925-427-7567

CC:

Subject: Pressure Reducing Valve @ Lab Air

Drawing: LP2-1A
Cost Impact:
Spec Section: 15410 2.02 C.2
Schedule Impact:

Request: Date Required: 10/26/2006
On LP2-1A / POC 2.1, 2.2, 2.3 a Pressure Reducing Valve is shown. Specifications call for a C.M. Bailey, Wilkins or Watts product to be installed. None of these manufacturers make a valve that meets the requirements as specified, an adjustable in 1 psi increment from 10 to 100 psi. DSM proposes the attached Dial-in Regulator. Please advise if this is acceptable.

Requested by: Staci Freeman
Dowdle & Sons Mechanical, Inc

Response:

Answered By
Company
Date

Page 1 of 1

S. J. AMOROSO
Request For Information/Clarification

DSA FILE NO. 7-C1
DSA APPL. No. 01-106226

To: tBP/Architecture, 1000 Burnett Ave, Suite 140, Concord, CA 94520
Attn: Celia Chiang, Tom Beckett
Fax: 925-245-6495
Project: LOS MEDANOS COLLEGE SCIENCE BUILDING, Contra Costa Community College District
tBP job: 20247.00
Subj.: PRVs on LP drawings, 2nd time around
RFI No: **387.1**
Reference (dwg, spec.): LP2-1A, LP1-01
Subcontractor RFI:

Reply Requested By: 10/26/06

INFORMATION REQUESTED: Date: 10/1/06 Received 10/31/06

The response to RFI 387 directed our attention to the specifications.

However, the specifications call for a CM Bradley, Wilkins or Watts product to be installed. None of these manufacturers make a valve that meets the requirements as specified (i.e. adjustable in 1 psi increment 10 to 100 psi). Dowdle proposes the attached Dial-in Regulator. Please advise.

SUGGESTED SOLUTION:
Cost Impact: ☐ Schedule Impact: ☐ days By: Mark Delgado

RESPONSE: DATE:

Dial-in Regulator acceptable as long as it meets the adjustable 1psi increments requirements and the set-up pressure is checked/tested by a gauge to confirm accurate pressure is being met.

Richard Cate/RFD - 10/31/06

RFI # 000
Page 1

Dial-in Regulators

Transparent, pressure calibrated adjustment dial allows quick and the capital pressure and eliminates the need for a pressure gauge. The compact design is perfect for applications where a pressure gauge cannot be mounted because it cannot mount in a by-positive no dial face is always visible. They have two ½" gauge ports, which typically are used for additional outlets. Regulators have a zinc body. Accuracy is 1.5% of maximum pressure. Max. inlet is 250 psi. Temperature range is 125° F. Connections are NPT female.

Pipe Size	Max. outlet	Regulating Range, psi	Overall Size, Ht. x Wd.		Each
¼"	117	0 to 160	4.1"x3.2"	4993K12	$54.40
½"	117	0 to 160	4.1"x3.2"	4993K13	$54.40
¾"	195	0 to 160	4.1"x3.2"	4993K14	$54.40
1"	270	0 to 160	4.1"x3.2"	4993K15	$54.40

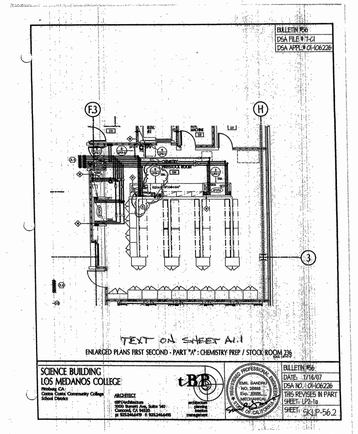

Los Medanos College
4CD Proj.# : L-565-B-23-SC
Science Building

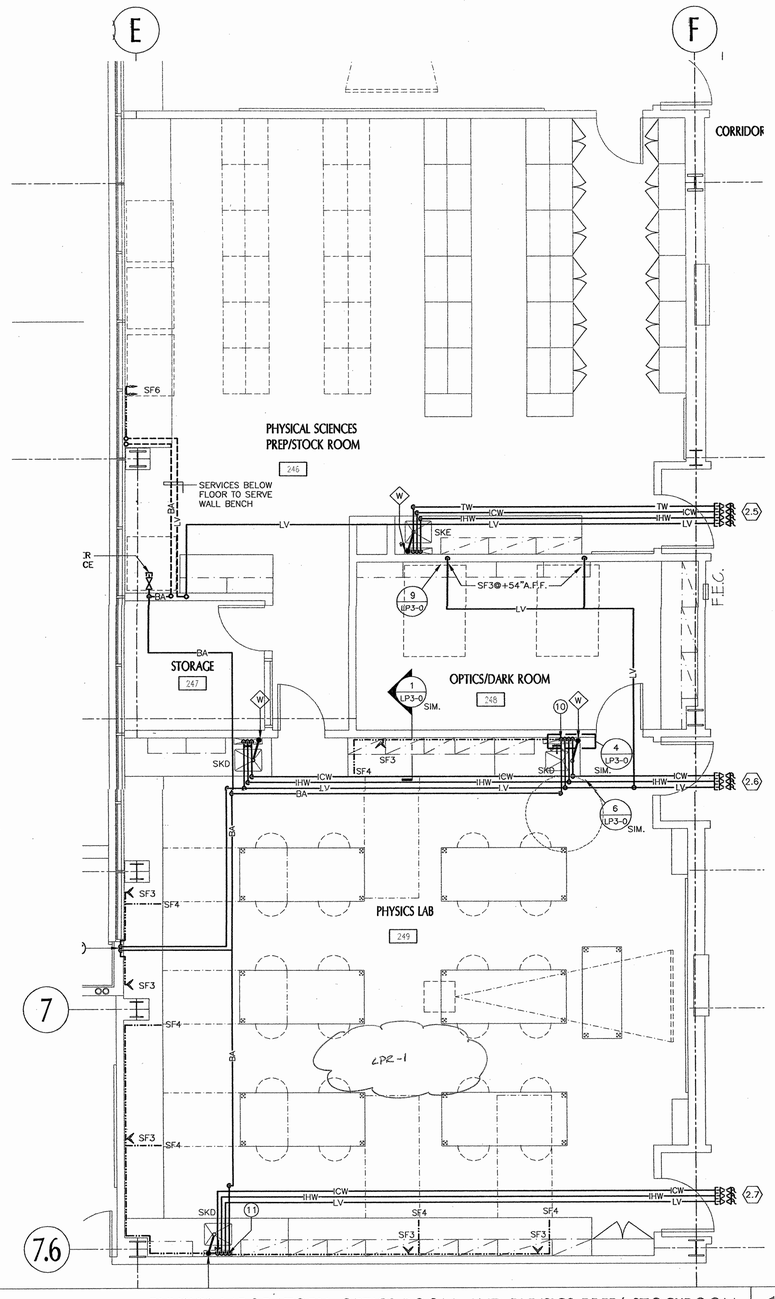

PHYSICS LABORATORY, OPTICS ROOM, AND PHYSICS PREP/ STOCKROOM | 1
SCALE: 1/4"=1'-0"

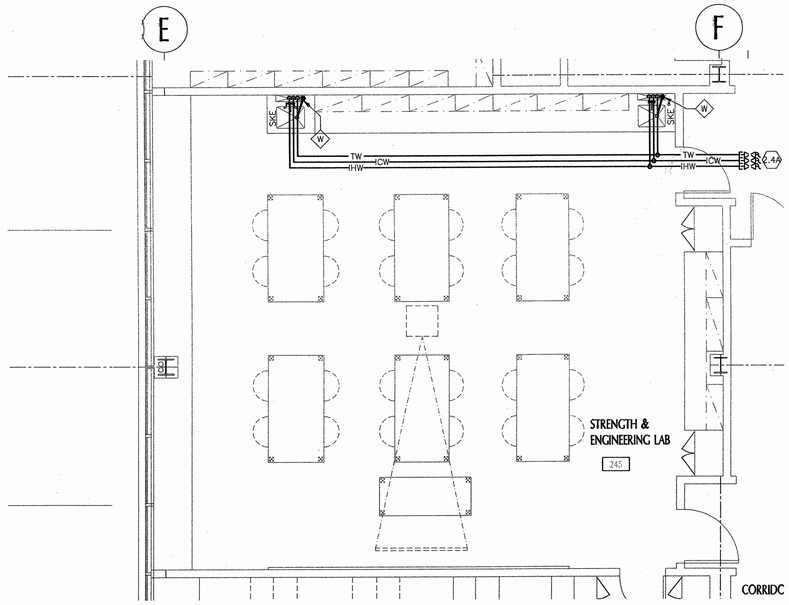

STRENGTH AND ENGINEERING LABORATORY | 2
SCALE: 1/4"=1'-0"

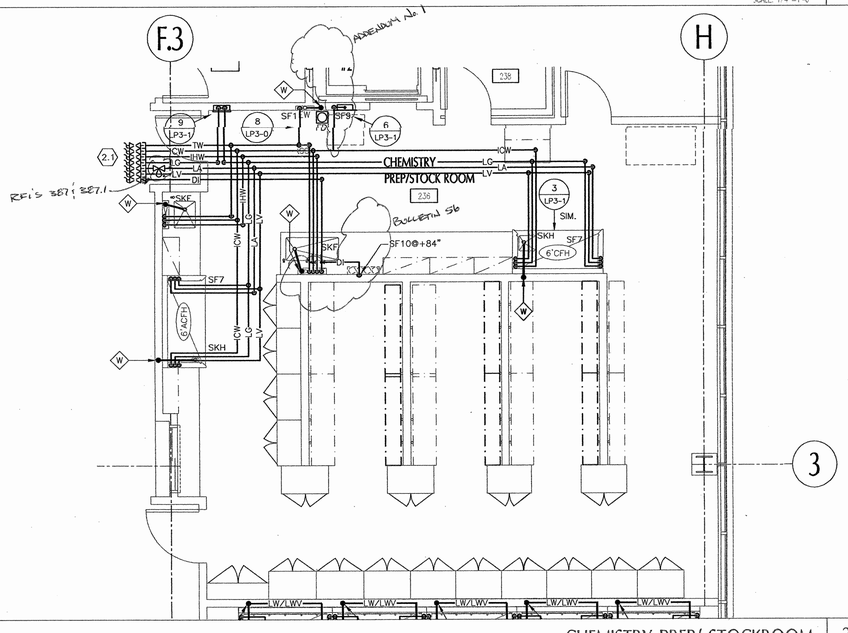

CHEMISTRY PREP/ STOCKROOM | 3
SCALE: 1/4"=1'-0"

KEY PLAN

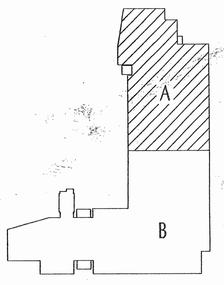

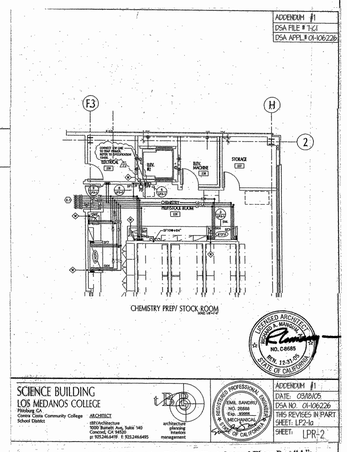

ADDENDUM #1
DSA FILE # 7-C-1
DSA APPL # 01-106226

SCIENCE BUILDING
LOS MEDANOS COLLEGE
Pittsburg CA
Contra Costa Community College School District

ARCHITECT
tBP/Architecture
1000 Burnett Ave, Suite 140
Concord, CA 94520
p: 925.246.6495 f: 925.246.6495

ADDENDUM #1
DATE: 03/08/25
DSA NO: 01-106226
THIS REVISES IN PART
SHEET: LP2-1a
SHEET: LPR-2

Refer to LP2-1a, LPR-2, Lab Plumbing Enlarged Plans Second Floor-Part "A":
a. In Chemistry Prep/Stock Room 236, connect ICW line to trap primer. Refer to Specification 15400 for trap primer requirements. ADDENDUM No. 1

DESIGN NORTH
TRUE NORTH

0 2 4 8 16

tBP
architecture
planning
interiors
management

tBP/Architecture
1000 Burnett Avenue, Suite 140
Concord, CA 94520
p: 925.246.6495 f: 925.246.6495

REGISTERED PROFESSIONAL ENGINEER
EMIL SANDHU
Exp. 12/31/25
MECHANICAL
STATE OF CALIFORNIA

RFD
RESEARCH FACILITIES DESIGN
1330 Broadway, Suite 1426
Tax Class, Oakland 94612
p: 510 - 294 - 4000
FAX 510 - 294 - 4001

DIV. OF THE STATE ARCHITECT
OFFICE OF REGULATION SERVICES
APPL - 01-106226
DATE 1-19-05

name
address
city, state, zip
ph: fx:

SCIENCE BUILDING
LOS MEDANOS COLLEGE

Contra Costa Community College District

tBP project number : 202411.00
file name: LP2-1
drawn by: RC checked by: ES
date: NOVEMBER 15, 2024

Rev.	date:	description:

drawing title:
ENLARGED PLANS
SECOND FLOOR-PART "A"

LMC SCIENCE 313-023-112.01-0-00.00
drawing no:
LP2-1a

S. J. AMOROSO
Request For Information/Clarification

DSA FILE NO. 7-C1
DSA APPL. No. 01-106226

To: tBP/Architecture
1000 Burnett Ave, Suite 140
Concord, CA 94520

Attn: Celia Chiang, Tom Beckett
Fax: 925-246-6495

Subj.: Relocation of gas shut-off valve

Reference (dwg, spec.): LP2-1b

Project: LOS MEDANOS COLLEGE
SCIENCE BUILDING
Contra Costa Community College District

tBP p/n: 20247.00

RFI No: **211**
Subcontractor RFI: Dowdle 43

Reply Requested By: 5/15/06

INFORMATION REQUESTED: Date: 5/8/06

On sheet LP2-1b, the Lab Gas Shut-off Valve is shown outside of General Chemistry Lab 242 near door 245. Dowdle would like to install this valve near door 245 (also outside of General Chemistry Lab 242). Please advise if this is acceptable.

SUGGESTED SOLUTION:

Cost Impact: ☐ Schedule Impact: ☐ days By: Mark Delgado

RESPONSE: Relocation of Lab 241 lab gas shut-off valve near door 245 is acceptable. The valve box is to be located inside the room as indicated on attached sketch. Provide credit for piping run deleted. DATE: 5.9.06

Attachment: Coordinate location of valve box with switch adjacent to door.

By: AMO/KAS

TRANSMITTAL RECORD:

FROM	TO	DATE
S.J. AMOROSO	tBP / ARCHITECTURE	4/4/06- 5.9.06
tBP / ARCHITECTURE	ENGINEER/CONSULTANT AMME/RFP	5.9.06
ENGINEER/CONSULTANT	tBP / ARCHITECTURE	5.9.06
tBP / ARCHITECTURE	S.J. AMOROSO	5.9.06
S.J. AMOROSO	ORIGINATOR	

RFI # 000
Page 1

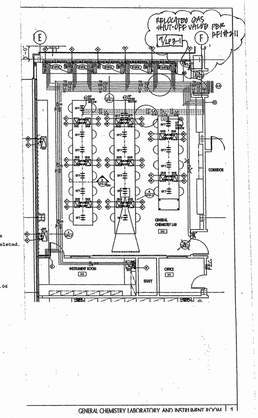

GENERAL CHEMISTRY LABORATORY AND INSTRUMENT ROOM | 1

S. J. AMOROSO
Request For Information/Clarification

DSA FILE NO. 7-C1
DSA APPL. No. 01-106226

To: tBP/Architecture
1000 Burnett Ave, Suite 140
Concord, CA 94520

Attn: Celia Chiang, Tom Beckett
Fax: 925-246-6495

Subj.: Conflict between electrical panel and gas valve
Reference (dwg, spec.): LE2-1b, LP2-1b

Project: LOS MEDANOS COLLEGE
SCIENCE BUILDING
Contra Costa Community College District

tBP p/n: 20247.00

RFI No: **384**
Subcontractor RFI:

Reply Requested By: 10/20/06

INFORMATION REQUESTED: Date: 10/17/06

Per sheet LE2-1b, and electrical panel is located in the above wall near the corridor entry to room 235. This panel is the same depth as the wall. Per sheet LP2-1b, there is a gas shut-off valve in 235, which is the lab/lecture room. However, it cannot be installed in this location due to the presence of the electrical panel. There is an eye wash in the adjoining wall, preventing installation of the valve there. Please advise.

SUGGESTED SOLUTION:

Cost Impact: ☐ Schedule Impact: ☐ days By: Mark Delgado

RESPONSE: DATE: 7

BPD recommends the following two options:

Option 1: Relocate gas shut-off valve box at the space between marker board and 6'ACFE south of grid line F.3/4).

Option 3: Relocate gas shut-off valve box where thermostat is located at the north entry door and relocate thermostat at the space between marker board and 6'ACFE (south of grid line F.3/4).

Please provide cost options prior to construction.

Richard H. Cate/BPD - 10/23/06

NOTE: NO PIPING FROM CORRIDOR DIRECTLY TO VALVE

RFI # 000
Page 1

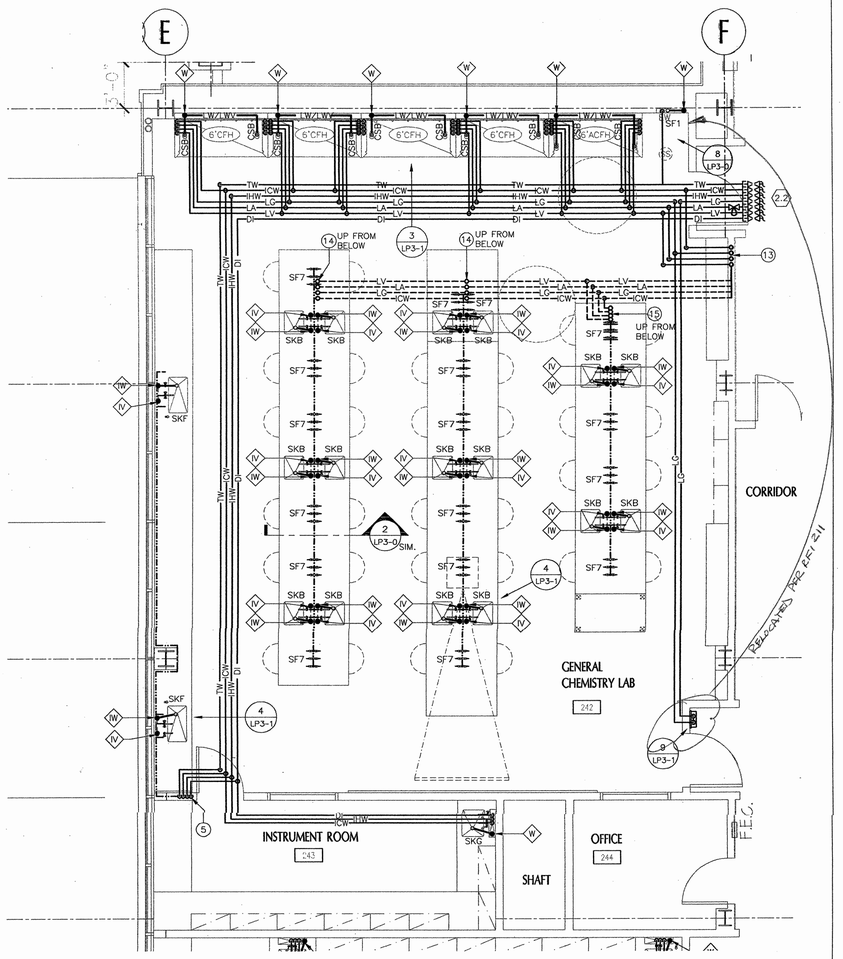

GENERAL CHEMISTRY LABORATORY AND INSTRUMENT ROOM 1
SCALE: 1/4"=1'-0"

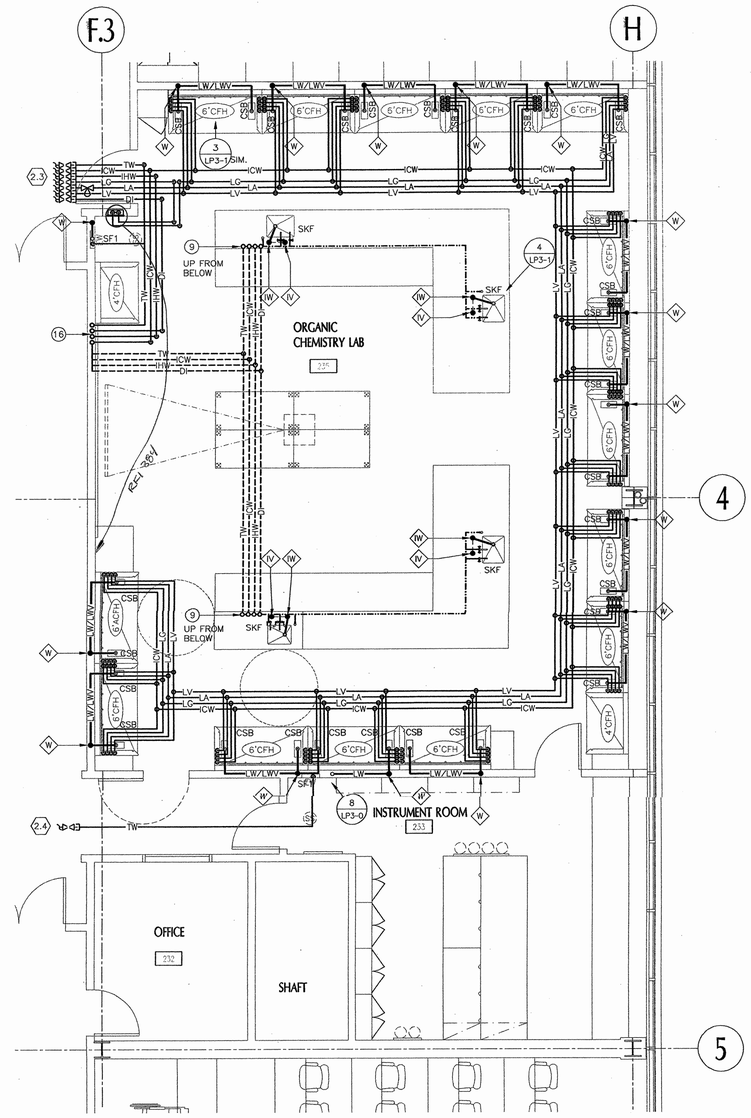

ORGANIC CHEMISTRY LABORATORY AND INSTRUMENT ROOM 2
SCALE: 1/4"=1'-0"

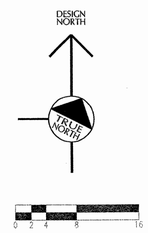

KEY PLAN

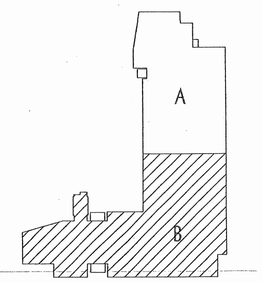

tBP
architecture
planning
interiors
management

tBP/Architecture
1000 Burnett Avenue, Suite 140
Concord, CA 94520
p: 925.246.6419 f: 925.246.6495

REGISTERED PROFESSIONAL ENGINEER
EMIL SANDRI
NO. 28898
Exp. 12/06
MECHANICAL
STATE OF CALIFORNIA

RFD
RESEARCH FACILITIES DESIGN
3905 Fifth Avenue, Suite 300
San Diego, California 92103
TEL 619 - 297 - 0700
FAX 619 - 294 - 4801

IDENTIFICATION STAMP
DIV. OF THE STATE ARCHITECT
OFFICE OF REGULATION SERVICES
APP. - 01-190226
DATE 1-13-06

name:
address:
city, state, zip:
ph:
fax:

SCIENCE BUILDING
LOS MEDANOS COLLEGE

Contra Costa Community College District

tBP project number : 20241.00
file name: LP2-1
drawn by: PC checked by: ES
date: NOVEMBER 15, 2004

Rev.	date:	description:

drawing title:
ENLARGED PLANS
SECOND FLOOR-PART "B"

LMC SCIENCE 313-023-T12.01-0-00.00
drawing no:
LP2-1b

S. J. AMOROSO
Request For Information/Clarification

DSA FILE NO. 7-C1
DSA APPL. No. 01-106226

To: tBP/Architecture
1000 Burnett Ave, Suite 140
Concord, CA 94520

Attn: Celia Chiang, Tom Beckett
Fax: 925-246-6495

Subj.: Location of SF10's

Reference (dwg, spec.): submittal 43

Reply Requested By: 10/4/06

Project: LOS MEDANOS COLLEGE
SCIENCE BUILDING
Contra Costa Community College District

tBP p/n: 20247.00

RFI No: **358.1**
Subcontractor RFI:

INFORMATION REQUESTED: Date: 9/27/06

In RFI 358, we requested to relocate the SF1) outlet in room 135 from the sidewall of the pipe chase to the adjoining sheetrock wall to match the installation of rooms 145 and 230 and the response was to approve this request.

However, after further review, we wish to rescind the request made in RFI 358 and to actually ask the opposite question. The front panel of the pipe chases are removable. Therefore, we ask that all SF 10's be positioned in the sidewall of pipe chases and NOT in sheetrock walls so that the removable front panel will provide easy access to the compression fitting of the SF10 fixture. Please advise.

SUGGESTED SOLUTION:
Cost Impact: ☐ **Schedule Impact** ☐ days **By:** Mark Delgado

RESPONSE: **DATE:**

Please find Response to RFI #358.1: Locating DI fitting at fixed side of pipe drop enclosure is acceptable as originally noted on Sheet S5 of Submittal 43.

Richard H. Cate/RFD - 9/28/06

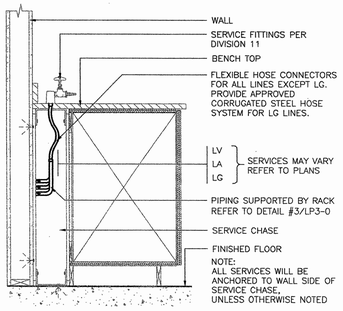

TYPICAL WALL BENCH 1"=1'-0" (1)

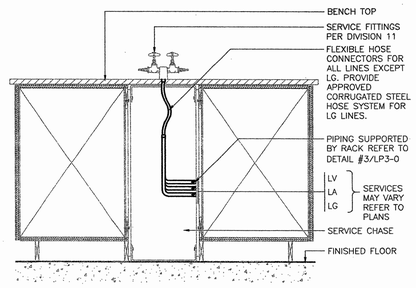

TYPICAL ISLAND BENCH 1"=1'-0" (2)

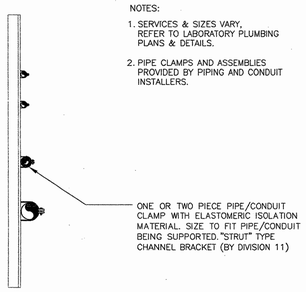

NOTES:

1. SERVICES & SIZES VARY. REFER TO LABORATORY PLUMBING PLANS & DETAILS.
2. PIPE CLAMPS AND ASSEMBLIES PROVIDED BY PIPING AND CONDUIT INSTALLERS.

BELOW BENCH SUPPORT RACK 1-1/2"=1'-0" (3)

NOTES: 1. SERVICES AND ARRANGEMENT MAY VARY REFER TO LABORATORY PLUMBING PLANS

2. COORDINATE PIPING INSTALLATION WITH DIVISION 11 SHOP SUBMITTALS

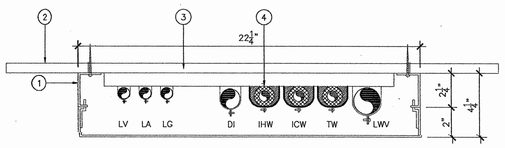

WALL BENCH CONDITION

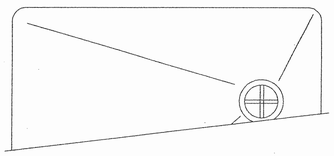

1. PIPE DROP ENCLOSURE PER DIVISION 11
2. WALL
3. UNISTRUT P-3300 ANCHORED TO WALL w/ #12 SMS AT EA END
4. ONE OR TWO PIECE PIPE/CONDUIT CLAMP WITH ELASTOMERIC ISOLATION MATERIAL. SIZE TO FIT PIPE/CONDUIT BEING SUPPORTED.

SEE EFI 358.1

TYPICAL WALL PIPE DROP ENCLOSURE 3"=1'-0" (4)

1. POINT OF CONNECTION TO 1-1/2" LABORATORY WASTE VENT AT 6" ABOVE FINISHED CEILING REFER TO P.* SERIES DRAWINGS
2. POINT OF CONNECTION TO 2" LABORATORY WASTE AT 6" ABOVE FINISHED FLOOR, REFER TO P.* SERIES DRAWINGS
3. LABORATORY WASTE OFFSET, MAINTAINED WITHIN TOE KICK SPACE OF BASE CABINET REFER TO P.* SERIES DRAWINGS FOR CONTINUATION

NOTE:
WASTE PENETRATION OFFSETS MAY OCCUR AT HOODS, WALL, ISLAND, AND PENINSULA BENCH LABORATORY SINKS AND/OR CUPSINKS. LOCATIONS VARY TO AVOID STRUCTURAL BEAMS AND JOISTS. REFER TO PLANS.

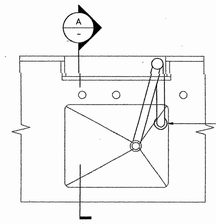

PLAN

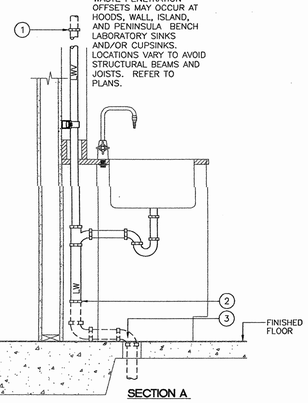

SECTION A

TYPICAL WASTE OFFSET AT SINK LOCATIONS 1"=1'-0" (5)

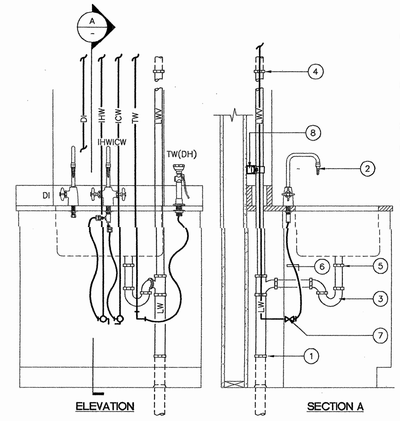

ELEVATION

SECTION A

1. POINT OF CONNECTION TO 2" LABORATORY WASTE AT 6" ABOVE FINISHED FLOOR, REFER TO P.* SERIES DRAWINGS
2. SERVICE FITTINGS AS SHOWN ON LF-SERIES DRAWINGS. REFER TO SCHEDULE DRAWING LP1.00
3. 1-1/2 "P" TRAP
4. POINT OF CONNECTION TO 1-1/2" LABORATORY WASTE VENT AT 6" ABOVE FINISHED CEILING REFER TO P.* SERIES DRAWINGS
5. LABORATORY WASTE POINT OF CONNECTION TO SINK TAILPIECE
6. 1/2" DIAMETER FLEXIBLE CONNECTORS
7. SHUT-OFF VALVE
8. UNISTRUT CHANNEL ANCHORED TO WALL

NOTES:
1. SERVICES MAY VARY, REFER TO PLANS & SCHEDULES
2. PROVIDE SHUT-OFF VALVES OR ANGLE STOPS IN SINK CABINET FOR ICW & IHW SUPPLY TO DECK MOUNTED SERVICE FITTINGS
3. REFER TO DETAIL #7/LP3-0 FOR DI PIPING AT LABORATORY SINK

TYPICAL PIPING AT LABORATORY SINK 1"=1'-0" (6)

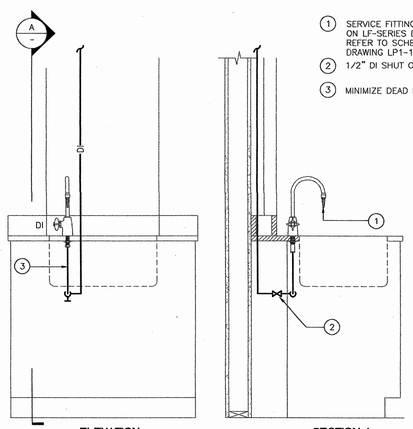

ELEVATION

SECTION A

1. SERVICE FITTING AS SHOWN ON LF-SERIES DRAWINGS. REFER TO SCHEDULE DRAWING LP1-1
2. 1/2" DI SHUT OFF VALVE
3. MINIMIZE DEAD LEG LENGTH

TYPICAL DI PIPING AT LABORATORY SINK 1"=1'-0" (7)

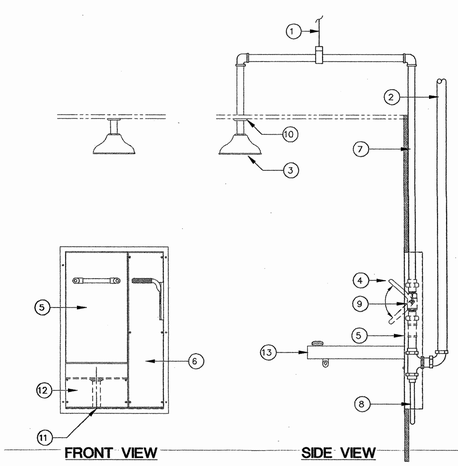

FRONT VIEW

SIDE VIEW

1. SINGLE PIPE HANGER TO STRUCTURE ABOVE
2. 1-1/4" TW SUPPLY
3. SAFETY SHOWER SUPPLIED PER DIVISION 11 INSTALLED PER DIVISION 15
4. ST. STL. ACTUATING ARM FOR SAFETY SHOWER
5. RECESSED EYEWASH AT WALL SUPPLIED PER DIVISION 11 INSTALLED PER DIVISION 15
6. REMOVABLE SHOWER VALVE ACCESS PANEL
7. 1" TW SUPPLY TO SAFETY SHOWER
8. 1/2" TW SUPPLY TO EYEWASH
9. INSTANT ACTION BALL VALVE
10. ESCUTCHEON PLATE
11. EYEWASH DRAIN TAIL PIECE CONNECTED TO WASTE AND VENT SYSTEM. PROVIDE ACCESS PANEL FOR P-TRAP.
12. REMOVABLE DRAIN ACCESS PANEL
13. ST. STL. DRAIN PAN

NOTE:
DETAIL IS SHOWN DIAGRAMATICALLY. PIPING SHALL BE MAINTAINED WITHIN WALL AND CEILING SPACE.

SAFETY SHOWER / RECESSED EYEWASH UNIT NO SCALE (8)

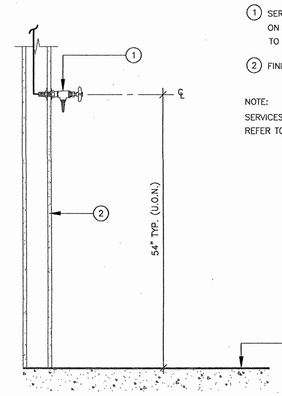

SECTION

1. SERVICE FITTINGS AS SHOWN ON LF-SERIES DRAWINGS. REFER TO SCHEDULE DRAWING LP1-00
2. FINISHED WALL

NOTE:
SERVICES & ARRANGEMENTS MAY VARY REFER TO PLANS & SCHEDULES

TYPICAL PIPING AT WALL MOUNTED FITTING 1"=1'-0" (9)

tBP
architecture
planning
interiors
management

tBP/Architecture
1000 Burnett Avenue, Suite 140
Concord, CA 94520
p: 925.246.6419 f: 925.246.6495

LICENSED ARCHITECT
REGISTERED PROFESSIONAL ENGINEER
STATE OF CALIFORNIA

RFD
RESEARCH FACILITIES DESIGN
5885 77th Avenue, Suite 300
Sacramento, California 95828
TEL 916 . 294 . 7000
FAX 916 . 294 . 4001

IDENTIFICATION STAMP
DIVISION OF THE STATE ARCHITECT
OFFICE OF REGULATION SERVICES
APPROVED
DATE

name
address
city, state, zip
ph:
fx:

SCIENCE BUILDING
LOS MEDANOS COLLEGE

Contra Costa Community College District

tBP project number : 2024.00
file name: LP3-0
drawn by: PC checked by: ES
date: NOVEMBER 15, 2004

Rev:	date:	description:

drawing title:
LABORATORY PLUMBING DETAILS

LMC SCIENCE 313-023-T12.01-0-00.00
drawing no:
LP3-0

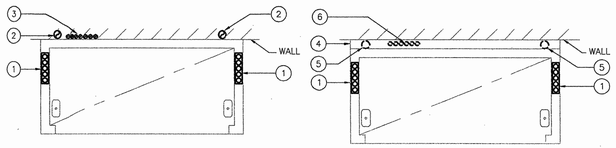

HOOD PLAN VIEW

HOOD PLAN VIEW W/ 3" FILLER SPACE

1. PREPIPED WET & DRY SERVICE SUPPLIES TO HOOD. SERVICES MAY VARY, REFER TO PLANS FOR TYPES.
2. LABORATORY WASTE AND VENT RISER LOCATED WITHIN WALL.
3. PIPED SERVICES LOCATED IN WALL TO FEED ADJACENT BENCH SERVICE FITTINGS. REFER TO PLANS FOR WHERE OCCURS.
4. 3" FILLER PANEL/CHASE PROVIDED PER DIVISION 11. REFER TO LF PLANS FOR LOCATIONS.
5. LOCATION OF LABORATORY WASTE AND VENT RISER LOCATED BEHIND HOOD IN 3" CHASE. REFER TO PLANS FOR WHERE OCCURS.
6. PIPED SERVICES BEHIND HOOD IN 3" CHASE TO FEED ADJACENT BENCH SERVICE FITTINGS. REFER TO PLANS FOR WHERE OCCURS.

NOTE:
WASTE PENETRATION LOCATIONS MAY BE OFFSETED TO AVOID STRUCTURAL BEAMS, REFER TO P-SERIES DRAWINGS.

TYPICAL PIPING AT CHEMICAL FUME HOOD-PLAN — NO SCALE (1)

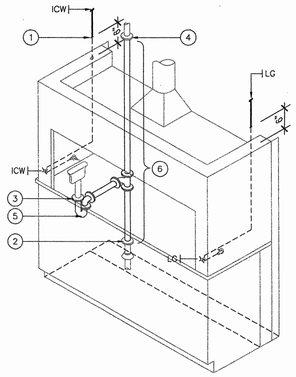

1. POINT OF CONNECTION TO PRE PIPED HOOD SERVICES.
2. POINT OF CONNECTION TO 2" LABORATORY WASTE AT 6" ABOVE FINISHED FLOOR. REFER TO P.* SERIES DRAWINGS.
3. POINT OF CONNECTION TO CUP SINK TAILPIECE.
4. POINT OF CONNECTION TO 1-1/2" LABORATORY VENT @ 6" ABOVE FINISHED CEILING.
5. 1-1/2" P-TRAP.
6. LABORATORY WASTE AND VENT RISER BEHIND HOOD IN 3" CHASE OR IN WALL. REFER TO PLANS FOR LOCATIONS.

NOTES:
1. SERVICES MAY VARY, REFER TO PLANS.
2. REFER TO SCHEDULES FOR PIPE SIZES. REFER ALSO TO DETAIL #1/LP3-1.
3. PIPING SHOWN DASHED IS PART OF PRE PIPED FUME HOOD PER DIVISION 11.
4. PIPING SHOWN SOLID TO BE PROVIDED UNDER DIVISION 15.

TYPICAL PIPING AT FUME HOOD W/ (1) CUPSINK — NO SCALE (2)

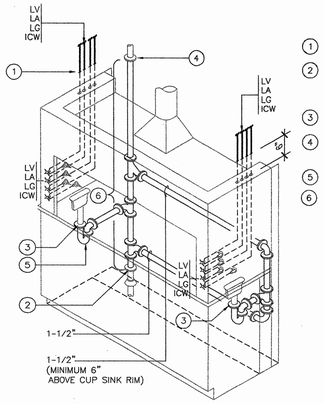

1. POINT OF CONNECTION TO PRE PIPED HOOD SERVICES.
2. POINT OF CONNECTION TO 2" LABORATORY WASTE AT 6" ABOVE FINISHED FLOOR. REFER TO P.* SERIES DRAWINGS.
3. POINT OF CONNECTION TO CUP SINK TAILPIECE.
4. POINT OF CONNECTION TO 1-1/2" LABORATORY VENT @ 6" ABOVE FINISHED CEILING.
5. 1-1/2" P-TRAP.
6. LABORATORY WASTE AND VENT RISER BEHIND HOOD IN 3" CHASE OR IN WALL. REFER TO PLANS FOR LOCATIONS.

NOTES:
1. SERVICES MAY VARY, REFER TO PLANS.
2. REFER TO SCHEDULES FOR PIPE SIZES. REFER ALSO TO DETAIL #1/LP3-1.
3. PIPING SHOWN DASHED IS PART OF PRE PIPED FUME HOOD PER DIVISION 11.
4. PIPING SHOWN SOLID TO BE PROVIDED UNDER DIVISION 15.

CONFIRMED THAT NO INDIVIDUAL SHUT-OFF VALVES NEEDED PER RFI 509

TYPICAL PIPING AT FUME HOOD W/ (2) CUPSINK — NO SCALE (3)

1. *SERVICE FITTINGS AS SHOWN ON LF-SERIES DRAWINGS. FOR TYPICAL PIPING AT LABORATORY SINKS REFER DETAIL #6/LP3-0*
2. 1-1/2" "P" TRAP
3. RETURN BEND COMPOSED OF A 45°(0.79 rad), A 90°(1.6rad), AND A 45°(0.79 rad) FITTING.
4. POINT OF CONNECTION TO 2" VERICAL FIXTURE DRAIN @ 6"A.F.F.
5. *POINT OF CONNECTION TO 1-1/2"* VERICAL FIXTURE VENT @ 6"A.F.F.
6. LABORATORY WASTE POINT OF CONNECTION TO SINK TAILPIECE
7. CLEANOUT

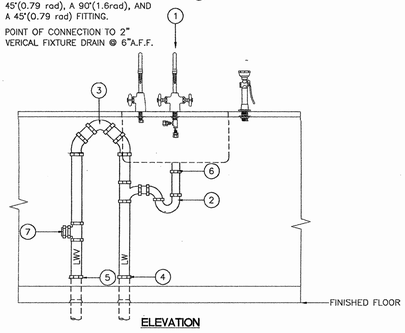

ELEVATION

TYPICAL ISLAND WASTE & VENT PIPING FOR LAB SINKS — 3/4"=1'-0" (4)

1. UNDERCOUNTER GLASSWARE WASHER
2. WASTE.
3. PIPE UNION (TYP.)
4. IHW SUPPLY W/ BALL VALVE
5. ICW SUPPLY W/ BALL VALVE
6. DI SUPPLY W/ BALL VALVE (WHERE OCCURS, REFER TO PLANS FOR LOCATIONS)
7. AIR GAP (COORDINATE INSTALLATION W/ DIVISION 11 SHOP SUBMITTALS)
8. WYE TAILPIECE
9. LABORATORY WASTE VENT
10. FLEX HOSE BY MANUFACTURER
11. SUPPLIES TO WASHER
12. 1 1/2" P-TRAP

NOTE:
REFER TO LABORATORY PLUMBING PLANS FOR ADDITIONAL SINK RELATED PIPING

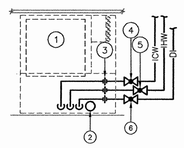

ELEVATION – SUPPLY PIPING

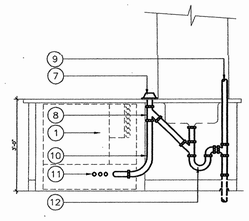

ELEVATION – WASTE PIPING

PIPING AT UNDERCOUNTER WASHER — NO SCALE (5)

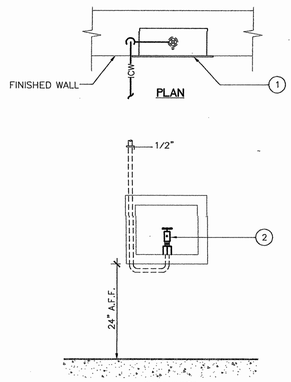

PLAN

ELEVATION

1. ICE MAKER HOOK-UP BOX
2. 1/2" FIP INLET x 1/4"OD OUTLET COMPRESION ANGLE VALVE SUPPLY CONNECTION IS 1/2" NPT.

PIPING AT ICE MAKER VALVE BOX — NO SCALE (6)

1. ICW SUPPLY
2. PIPE UNION (TYPICAL)
3. ISOLATION VALVE (TYPICAL)
4. DRAIN TO FLOOR SINK. REFER TO LP AND PLUMBING PLANS
5. IHW SUPPLY

NOTE: REFER TO PLANS AND SCHEDULES FRO PIPE SIZES.

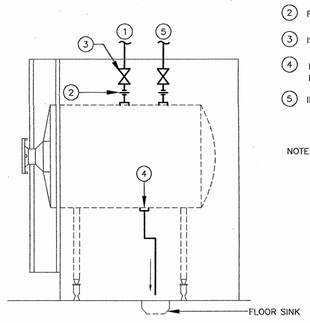

PIPING AT AUTOCLAVE — NO SCALE (7)

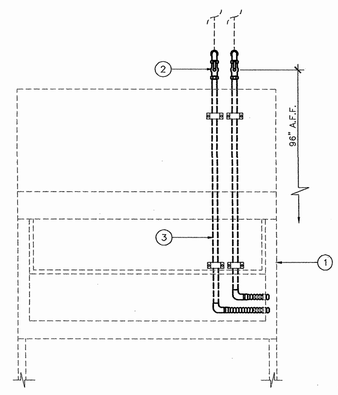

ELEVATION

1. BIOLOGICAL SAFETY CABINET.
2. WALL MOUNTED SHUT-OFF VALVES.
3. PIPING BEHIND BIOLOGICAL SAFETY CABINET TO SERVICE FITTING POINT OF CONNECTION

NOTE:
SERVICES MAY VARY, REFER TO PLANS

PIPING AT BIOLOGICAL SAFETY CABINET — NO SCALE (8)

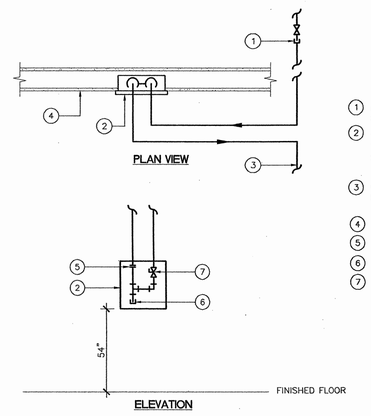

PLAN VIEW

ELEVATION

1. GAS DISTRIBUTION FROM POINT OF CONNECTION
2. 12"x12" SHUT OFF VALVE BOX W/ SIGN TO READ "GAS VALVE SHUT OFF" (PER SPECIFICATIONS)
3. GAS DISTRIBUTION PIPING TO LABORATORY SERVICES (REFER TO PLANS FOR ROUTING)
4. FINISHED WALL
5. UNION CONNECTION
6. PIPE CAP
7. GAS SHUT OFF VALVE

PIPING AT GAS SHUT-OFF VALVE — 3/4"=1'-0" (9)

tBP
architecture
planning
interiors
management

tBP/Architecture
1000 Burnett Avenue, Suite 140
Concord, CA 94520
p: 925.246.6419 f: 925.246.6495

REGISTERED PROFESSIONAL ENGINEER
EMIL SANDRU
NO. 28828
MECHANICAL
STATE OF CALIFORNIA

RFD
REGENCY FACILITIES DESIGN
3636 Fifth Avenue, Suite 300
San Diego, California 92103
PH: 619 - 294 - 4900
FAX: 619 - 294 - 4901

IDENTIFICATION STAMP
DIV. OF THE STATE ARCHITECT
OFFICE OF REGULATION SERVICES
APPL - 09.1506205
DATE 1-12-05

name
address
city, state, zip
ph: fx:

SCIENCE BUILDING
LOS MEDANOS COLLEGE

Contra Costa Community College District

tBP project number : 20241.00
file name: LP3-1
drawn by: RC checked by: ES
date: NOVEMBER 15, 2004

Rev.	date:	description:

drawing title:
LABORATORY PLUMBING DETAILS

LMC SCIENCE 313-023-112.01-0-00.00
drawing no:
LP3-1

POWER SYMBOLS AND DESCRIPTIONS

- DUPLEX RECEPTACLE MTD 18" AFF TO CENTER. DEVICE: WHITE, COVERPLATE: WHITE
- EM — DUPLEX RECEPTACLE MTD 18" AFF TO CENTER. CONNECTED TO EMERGENCY SYSTEM. DEVICE: RED, COVERPLATE: RED
- D — DEDICATED 20A RATED DUPLEX RECEPTACLE MTD 18" AFF TO CENTER. DEVICE: WHITE, COVERPLATE: WHITE
- GFI — GROUND FAULT INTERRUPTER DUPLEX RECEPTACLE MTD 18" AFF TO CENTER. DEVICE: WHITE, COVERPLATE: WHITE
- WP — WEATHER PROOF DUPLEX RECEPTACLE MTD 18" AFF TO CENTER. DEVICE: WHITE, COVERPLATE: GASKETED STAINLESS STEEL
- SURFACE MOUNTED DUPLEX RECEPTACLE MTD 18" AFF TO CENTER. DEVICE: WHITE, COVERPLATE: STAINLESS STEEL
- H — HORIZONTALLY MOUNTED DUPLEX RECEPTACLE MTD 18" AFF TO CENTER. DEVICE: WHITE, COVERPLATE: WHITE
- 208V 1PH 20A SINGLE RECEPTACLE MTD 18" AFF TO CENTER. DEVICE: BLACK, COVERPLATE: WHITE
- 6-30R — SPECIALTY OUTLET, VERIFY NEMA CONFIGURATION AS NOTED ON PLANS MTD 18" AFF TO CENTER.
- FOURPLEX RECEPTACLE MTD 18" AFF TO CENTER. DEVICE: WHITE, COVERPLATE: WHITE
- D — DEDICATED 20A RATED FOURPLEX RECEPTACLE MTD 18" AFF TO CENTER. DEVICE: WHITE, COVERPLATE: WHITE
- SURFACE MOUNTED FOURPLEX RECEPTACLE MTD 18" AFF TO CENTER. DEVICE: WHITE, COVERPLATE: STAINLESS STEEL
- BENCHTOP ELECTRICAL PEDESTAL HUBBELL 6685 SERIES.
- BENCHTOP ELECTRICAL PEDESTAL HUBBELL 6687 SERIES.
- DUPLEX RECEPTACLE, FLUSH FLOOR MOUNTED, ON FIRE RATED POKE-THRU.
- FOURPLEX RECEPTACLE, FLUSH FLOOR MOUNTED, ON FIRE RATED POKE-THRU.
- CEILING OR ROOF MOUNTED RECEPTACLE
- PANELBOARD FLUSH MOUNTED
- PANELBOARD SURFACE MOUNTED
- N — NON-FUSED DISCONNECT SWITCH
- FUSED DISCONNECT SWITCH
- S^m — MOTOR HORSEPOWER RATED SWITCH.
- JUNCTION BOX, WALL MOUNTED.
- JUNCTION BOX, SURFACE MOUNTED, CONCEALED.
- JUNCTION BOX, FLUSH FLOOR MOUNTED.
- CONCEALED EMT CONDUIT WITH THW WIRE 2#12AWG + 1#12AWG GREEN GROUND, 1/2"C MINIMUM.
- CONCEALED EMT CONDUIT WITH THW WIRE 3#12AWG + 1#12AWG GREEN GROUND, 1/2"C MINIMUM.
- #10 — CONCEALED EMT CONDUIT WITH THW WIRE 3#10AWG + 1#12AWG GREEN GROUND, 3/4"C MINIMUM.
- G — CONCEALED EMT CONDUIT WITH THW WIRE 4#12AWG + 1#12AWG GREEN GROUND, 3/4"C MINIMUM.
- #10N — INDICATES (1)#10AWG NEUTRAL
- UNDERGROUND CONDUIT AND WIRE, 3/4"PVC MIN.
- HOMERUN
- HATCHED CONDUIT AND WIRE TO BE REMOVED
- CODE SIZED PULLBOX AS INDICATED ON PLANS.
- CODE SIZED PULLBOX OR SPLICE BOX AS INDICATED ON PLANS.
- INDICATES CONDUIT STUB-UP OR STUB-OUT LOCATION.
- WW — WIREWAY, WIREMOLD AL3800, 43" A.F.F. TO UNDERSIDE OF RACEWAY. SEE DETAILS LE4.1/LE4.2 FOR MOUNTING.

LIGHTING SYMBOLS AND DESCRIPTIONS

- S — SWITCH, SINGLE POLE 20A, MTD 48" AFF TO TOP DEVICE: WHITE COVERPLATE: WHITE
- [S] — SPECIALTY SWITCH AS DENOTED ON PLANS. DEVICE: WHITE COVERPLATE: WHITE

SIGNAL SYMBOLS AND DESCRIPTIONS

- DATA OUTLET, FLUSH MOUNTED OUTLET BOX WITH TRIM RING AND 3/4" C.O. AND PULLSTRING TO CABLETRAY IN THE CORRIDOR +18" A.F.F. TO CENTER U.N.O.
- TELEPHONE OUTLET, FLUSH MOUNTED OUTLET BOX WITH TRIM RING AND 3/4" C.O. AND PULLSTRING TO CABLETRAY IN THE CORRIDOR +18" A.F.F. TO CENTER U.N.O.
- TELECOMMUNICATIONS OUTLET , FLUSH MOUNTED OUTLET BOX WITH TRIM RING AND 3/4" C.O. AND PULLSTRING TO CABLETRAY IN THE CORRIDOR +18" A.F.F. TO CENTER U.N.O.
- TELECOMMUNICATION OUTLET FLUSH FLOOR MOUNTED ON FIRE RATED POKE-THRU.
- BENCHTOP TELE/DATA PEDESTAL HUBBELL 6685 SERIES. PROVIDE 3/4" C.O. AND PULLSTRING TO CABLE TRAY IN THE CORRIDOR.
- C — TELECOMMUNICATIONS CONDUIT ONLY, 3/4"C.O. U.N.O.

TELECOMMUNICATIONS SYSTEM STANDARDS

- ALL CABLING AND ASSOCIATED COMPONENTS SHALL COMPLY WITH ANSI/TIA/EIA-568-A.
- ALL CONDUIT AND PATHWAYS SHALL COMPLY WITH ANSI/TIA/EIA-569-A.
- ALL GROUNDING AND BONDING SHALL COMPLY WITH ANSI/TIA/EIA-607.

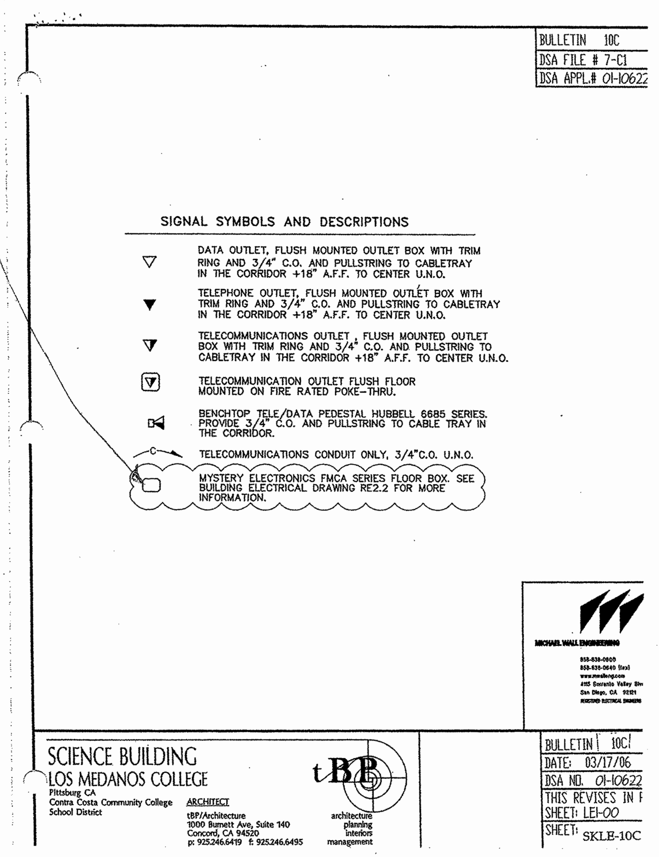

ABBREVIATIONS AND DESCRIPTIONS

A	AMPERES
AC	ALTERNATING CURRENT
A/C	AIR CONDITIONING
AIC	AMPERES INTERRUPTING CAPACITY
AFC	AVAILABLE FAULT CURRENT
AFF	ABOVE FINISHED FLOOR
AFG	ABOVE FINISHED GRADE
AF	AMP FRAME/AMP FUSE
ABV	ABOVE
AL	ALUMINUM
ARCH	ARCHITECT OR ARCHITECTURAL
AS	AMP SWITCH
AT	AMP TRIP
ATS	AUTOMATIC TRANSFER SWITCH
AWG	AMERICAN WIRE GAUGE
B/G	BELOW GRADE
BKBD	BACKBOARD
BEL	BELOW
C	CONDUIT WITH WIRE
CATV	CABLE TELEVISION
CCTV	CLOSED CIRCUIT TELEVISION
CB	CIRCUIT BREAKER
CLG	CEILING
CLF	CURENT LIMITING FUSE
CLR	CLEAR
CO	CONDUIT ONLY WITH NYLON PULLCORD
COAX	COAXIAL CABLE
CONC	CONCRETE
CONN	CONNECT OR CONNECTION
CONT	CONTINUATION
CONTR	CONTRACTOR
CPT	CONTROL POWER TRANSFORMER
CU	COPPER
CT	CURRENT TRANSFORMER
CW	COLD WATER
D	DEDICATED OUTLET
DC	DIRECT CURRENT
DIA	DIAMETER
DISC	DISCONNECT
DIST	DISTRIBUTION
DL	DAMP LOCATION
DB	DISTRIBUTION SWITCHBOARD
DWGS	DRAWINGS
EA	EACH
EB	90-MINUTE BATTERY CONNECTED TO UNIT
EC	ELECTRICAL CONTRACTOR
EDF	ELECTRICAL DRINKING FOUNTAIN
EG	CONNECTED TO EMERGENCY GENERATOR
EF	EXHAUST FAN
EI	CONNECTED TO EMERGENCY INVERTER
ELECT	ELECTRICAL
ELEV	ELEVATION/ELEVATOR
EMER, EM	EMERGENCY
EMT	ELECTRO-METALLIC TUBING
EQUIP	EQUIPMENT
EXIST, EX	EXISTING
F	DEGREES FAHRENHEIT
FA	FIRE ALARM
FFE	FINISH FLOOR ELEVATION
FIN	FINISH OR FINISHED
FIXT	FIXTURE
FLUOR	FLUORESCENT
FT.	FEET OR FOOT
FTG	FOOTING
FVNR	FULL VOLTAGE NON-REVERSING
G	GROUND BUS OR WIRE
GA	GAUGE
GALV	GALVANIZED
GC	GENERAL CONTRACTOR
GD	GARBAGE DISPOSAL
GFI	GROUND FAULT INTERRUPTER
GFR	GROUND FAULT RELAY
GG	GREEN GROUND
GND	GROUND
H	HORIZONTAL
HAZMAT	HAZARDOUS MATERIAL
HR	HOUR
HP	HORSEPOWER
HOA	HAND-OFF-AUTOMATIC
HT	HEIGHT
HTR	HEATER
HZ	HERTZ
IG	ISOLATED GROUND
IMC	INTERMEDIATE METAL CONDUIT
INCAND	INCANDESCENT
J-BOX	JUNCTION BOX
KS	KNEE SPACE
KVA	KILO-VOLTAMPERE
KW	KILO-WATT
KWH	KILO-WATT-HOUR
LBS	POUNDS
LF	LINEAL FEET
LOC	LOCATION
LT	LIGHT
LTG	LIGHTING
LV	LOW VOLTAGE
MH	MOUNTING HEIGHT
MANUF	MANUFACTURER
MAX	MAXIMUM
MC	MECHANICAL CONTRACTOR
MCC	MOTOR CONTROL CENTER
MCP	MOTOR CIRCUIT PROTECTION
MECH	MECHANICAL
MIN	MINIMUM
MLO	MAIN LUGS ONLY
MTD	MOUNTED
MTG	MOUNTING
N	NEUTRAL
NC	NORMALLY CLOSED
NEC	NATIONAL ELECTRIC CODE
NIC	NOT IN CONTRACT
NL	NIGHT LIGHT
NTS	NOT TO SCALE
NO	NORMALLY OPEN
OC	ON CENTER
OFCI	OWNER FURNISHED CONTRACTOR INSTALLED
OFOI	OWNER FURNISHED OWNER INSTALLED
PB	PULLBOX
PC	PHOTOCELL CONTROL
PCTC	PHOTOCELL/TIMECLOCK CONTROL
PE	PNEUMATIC-ELECTRIC
PH	PHASE
PIV	POST INDICATING VALVE
PL	PILOT LIGHT
PLBG	PLUMBING
PNL	PANEL
PVC	POLYVINYL CHLORIDE
PWR	POWER
PP	POWER POLE
PS	POWER SENTRY EMERGENCY BATTERY UNIT
Q	FIXTURE WITH QUARTZ RESTRIKE
QTY	QUANTITY
REC	RECESSED
RECEPT	RECEPTACLE
REF	REFRIGERATOR
REQ	REQUIREMENTS
RGS	RIGID GALVANIZED STEEL
RM	ROOM
SB	STANDBY
SD	SMOKE DETECTOR
SPEC	SPECIFICATION
SQ FT	SQUARE FEET OR SQUARE FOOT
STRUCT	STRUCTURAL
SW	SWITCH
SWBD	SWITCHBOARD
SWGR	SWITCHGEAR
TEMP	TEMPERATURE OR TEMPORARY
TV	TELEVISION
TEL, TELE	TELEPHONE
TC	TIMECLOCK
TRANSF	TRANSFORMER
TYP	TYPICAL
UGPS	UNDERGROUND PULL SECTION
UL	UNDERWRITERS LABORATORIES
UNO	UNLESS NOTED OTHERWISE
V	VOLTS
VA	VOLTAMPERE
VFD	VARIABLE FREQUENCY DRIVE
W/	WITH
WH	WATER HEATER
WP	WEATHER PROOF
WT	WEIGHT
X	EXISTING
XFMR	TRANSFORMER
XL	EXISTING TO BE RELOCATED
XN	NEW LOCATION OF RELOCATED FIXTURE
XR	EXISTING TO BE REMOVED

ELECTROMAGNETIC FIELDS (EMF)

ALL ELECTRIC DEVICES GENERATE AND ARE SUSCEPTIBLE TO EMF. SENSITIVE DEVICES (CRT'S, COMPUTERS, MAGNETIC MEDIA, ETC.) SHOULD BE PLACED TO MINIMIZE EXPOSURE FROM STRONG EMF SOURCES (TRANSFORMERS, SWITCHGEAR, FEEDERS, ETC.).

THE FOLLOWING TABLE SHOULD BE USED AS A GUIDE AND SHALL BE SUPERSEDED BY ACTUAL FIELD MEASUREMENTS.

SOURCE AMPACITY	RECOMMENDED RADIAL DISTANCE 10 mGauss	5 mGauss	1 mGauss
100	1.25'	1.75'	4'
225	2'	2.75'	6'
400	2.5'	4'	8'
800	4'	6'	12'
1200	5'	7'	16'
1600	6'	8'	20'
2000	7'	10'	22'
3000	9'	13'	28'
4000	11'	15'	35'

FEEDER SCHEDULE

600V BRANCH CIRCUITS 1ø 2W

LABEL	TYPE	SETS	PHASE	NEUTRAL	GROUND	CONDUIT
20B	20A-2W	1	2 # 12	N/A	1 # 12	3/4"
30B	30A-2W	1	2 # 10	N/A	1 # 10	3/4"
40B	40A-2W	1	2 # 8	N/A	1 # 10	3/4"
50B	50A-2W	1	2 # 6	N/A	1 # 10	3/4"

600V FEEDER SCHEDULE 1ø 3W

LABEL	TYPE	SETS	PHASE	NEUTRAL	GROUND	CONDUIT
60S	60A-3W	1	2 # 6	1 # 6	1 # 10	1"
100S	100A-3W	1	2 # 1	1 # 1	1 # 8	1 1/4"

600V FEEDER SCHEDULE 3ø 3W

LABEL	TYPE	SETS	PHASE	NEUTRAL	GROUND	CONDUIT
20 Δ	20A-3W	1	3 # 12	N/A	1 # 12	3/4"
30 Δ	30A-3W	1	3 # 10	N/A	1 # 10	3/4"
40 Δ	40A-3W	1	3 # 8	N/A	1 # 10	1"
50 Δ	50A-3W	1	3 # 6	N/A	1 # 10	1"
60 Δ	60A-3W	1	3 # 6	N/A	1 # 10	1"
70 Δ	70A-3W	1	3 # 4	N/A	1 # 8	1"
80 Δ	80A-3W	1	3 # 4	N/A	1 # 8	1 1/4"
90 Δ	90A-3W	1	3 # 2	N/A	1 # 8	1 1/4"
100Δ	100A-3W	1	3 # 1	N/A	1 # 8	1 1/4"
125Δ	125A-3W	1	3 # 1	N/A	1 # 6	1 1/2"
150Δ	150A-3W	1	3 # 1/0	N/A	1 # 6	1 1/2"
175Δ	175A-3W	1	3 # 2/0	N/A	1 # 6	2"
200Δ	200A-3W	1	3 # 3/0	N/A	1 # 6	2"
225Δ	225A-3W	1	3 # 4/0	N/A	1 # 4	2 1/2"
250Δ	250A-3W	1	3 # 250 KCM	N/A	1 # 4	2 1/2"
300Δ	300A-3W	1	3 # 350 KCM	N/A	1 # 4	3"
350Δ	350A-3W	1	3 # 500 KCM	N/A	1 # 2	4"
400Δ	400A-3W	1	3 # 600 KCM	N/A	1 # 2	4"
450Δ	450A-3W	2	3 # 4/0	N/A	1 # 2	3"
500Δ	500A-3W	2	3 # 250 KCM	N/A	1 # 2	3"
600Δ	600A-3W	2	3 # 350 KCM	N/A	1 # 1/0	4"
700Δ	700A-3W	2	3 # 500 KCM	N/A	1 # 1/0	4"
800Δ	800A-3W	2	3 # 600 KCM	N/A	1 # 1/0	4"
1000 Δ	1000A-3W	3	3 # 500 KCM	N/A	1 # 2/0	4"
1200 Δ	1200A-3W	3	3 # 600 KCM	N/A	1 # 3/0	4"
1600 Δ	1600A-3W	4	3 # 600 KCM	N/A	1 # 4/0	4"
2000 Δ	2000A-3W	5	3 # 600 KCM	N/A	1#250KCM	4"
2500 Δ	2500A-3W	6	3 # 600 KCM	N/A	1#350KCM	4"
3000 Δ	3000A-3W	8	3 # 600 KCM	N/A	1#500KCM	4"
4000 Δ	4000A-3W	10	3 # 600 KCM	N/A	1#500KCM	4"

600V FEEDER SCHEDULE 3ø 4W

LABEL	TYPE	SETS	PHASE	NEUTRAL	GROUND	CONDUIT
20Y	20A-4W	1	3 # 12	1 # 12	1 # 12	3/4"
30Y	30A-4W	1	3 # 10	1 # 10	1 # 10	3/4"
40Y	40A-4W	1	3 # 8	1 # 10	1 # 10	1"
50Y	50A-4W	1	3 # 6	1 # 6	1 # 10	1"
60Y	60A-4W	1	3 # 6	1 # 6	1 # 10	1"
70Y	70A-4W	1	3 # 4	1 # 4	1 # 8	1"
80Y	80A-4W	1	3 # 4	1 # 4	1 # 8	1 1/4"
90Y	90A-4W	1	3 # 2	1 # 2	1 # 8	1 1/4"
100Y	100A-4W	1	3 # 1	1 # 1	1 # 8	1 1/2"
125Y	125A-4W	1	3 # 1	1 # 1	1 # 6	1 1/2"
150Y	150A-4W	1	3 # 1/0	1 # 1/0	1 # 6	1 1/2"
175Y	175A-4W	1	3 # 2/0	1 # 2/0	1 # 6	2"
200Y	200A-4W	1	3 # 3/0	1 # 3/0	1 # 6	2"
225Y	225A-4W	1	3 # 4/0	1 # 4/0	1 # 4	2 1/2"
250Y	250A-4W	1	3 # 250 KCM	1 # 250 KCM	1 # 4	2 1/2"
300Y	300A-4W	1	3 # 350 KCM	1 # 350 KCM	1 # 4	3"
350Y	350A-4W	1	3 # 500 KCM	1 # 500 KCM	1 # 2	4"
400Y	400A-4W	1	3 # 600 KCM	1 # 600 KCM	1 # 2	4"
450Y	450A-4W	2	3 # 4/0	1 # 4/0	1 # 2	3"
500Y	500A-4W	2	3 # 250 KCM	1 # 250 KCM	1 # 2	3"
600Y	600A-4W	2	3 # 350 KCM	1 # 350 KCM	1 # 1/0	4"
700Y	700A-4W	2	3 # 500 KCM	1 # 500 KCM	1 # 1/0	4"
800Y	800A-4W	2	3 # 600 KCM	1 # 600 KCM	1 # 1/0	4"
1000Y	1000A-4W	3	3 # 500 KCM	1 # 500 KCM	1 # 2/0	4"
1200Y	1200A-4W	3	3 # 600 KCM	1 # 600 KCM	1 # 3/0	4"
1600Y	1600A-4W	4	3 # 600 KCM	1 # 600 KCM	1 # 4/0	4"
2000Y	2000A-4W	5	3 # 600 KCM	1 # 600 KCM	1#250KCM	4"
2500Y	2500A-4W	6	3 # 600 KCM	1 # 600 KCM	1#350KCM	4"
3000Y	3000A-4W	8	3 # 600 KCM	1 # 600 KCM	1#500KCM	4"
4000Y	4000A-4W	10	3 # 600 KCM	1 # 600 KCM	1#500KCM	4"

GENERAL NOTES:

1. ALL CURRENT CARRYING CONDUCTORS SHALL BE COPPER. INSULATION SHALL BE TYPE THW OR THHN/THWN FOR ALL BRANCH CIRCUITS UP TO AND INCLUDING SIZE #2AWG. INSULATION FOR CONDUCTORS OVER SIZE #2AWG SHALL BE XHHW.
2. ALL GROUND CONDUCTORS SHALL BE INSULATED COPPER.
3. ALL CONDUIT SHALL BE EMT (INSTALLED IN INTERIOR CONCEALED SPACES) OR SCHEDULE-40 PVC (INSTALLED UNDERGROUND) UNLESS OTHERWISE NOTED.
4. ALL AMPACITIES ARE BASED UPON TABLE 310-16 OF THE 1999 N.E.C.
5. FEEDER SCHEDULES INDICATED DATA FOR CONDUCTOR RATED UP TO 600V.

I WILL SEND CPE NOTIFICATION

S. J. AMOROSO
Request For Information/Clarification

DSA FILE NO. 7-C1
DSA APPL. No. 01-106226

To: tBP/Architecture, 1000 Burnett Ave, Suite 140, Concord, CA 94520
Attn: Celia Chiang, Tom Beckett
Fax: 925-246-6495

Project: LOS MEDANOS COLLEGE SCIENCE BUILDING Contra Costa Community College District
tBP p/n: 20247.00

Subj.: No provision for countertop telephone/data outlets on LF drawings
Reference (dwg, spec.) : LF drawings

RFI No: 181
Subcontractor RFI: EW Scott 14

Reply Requested By: 3/13/06

INFORMATION REQUESTED: Date: 3/6/06

On various locations throughout the LE drawings, a triangle with a box symbol appears over the background lab casework. Although this symbol is not defined, EW Scott interprets this symbol to mean countertop telephone/data outlets similar to the outlets nearby showing standard outlet symbols with a box symbol to mean countertop electrical outlets
LF drawings and the reviewed laboratory casework submittal (No. 43) show the countertop electrical outlets but do not account for the countertop telephone/data outlets. Please advise.

SUGGESTED SOLUTION:

Cost Impact: ☐ Schedule Impact: ☐ days By: Mark Delgado

RESPONSE: DATE: 3.9.06
The bench top pedestals for the telephone/data outlets (similar to nearby outlets showing standard electrical outlet symbols) are required as indicated on the LE drawings.
Attachments: The lab casework submittal #43 did not reflect the data pedestal locations.
Please coordinate locations accordingly. By: R. Cate/RFD

TRANSMITTAL RECORD:

FROM	TO	DATE
S.J. AMOROSO	tBP / ARCHITECTURE	3/2/06
tBP / ARCHITECTURE	ENGINEER/CONSULTANT	3.2.06
ENGINEER/CONSULTANT	tBP / ARCHITECTURE	3.9.06
tBP / ARCHITECTURE	S.J. AMOROSO	3.9.06
S.J. AMOROSO	ORIGINATOR	

CC: DOW DIVERSIFIED

RFI # 000
Page 1

tBP architecture planning interiors management
tBP/Architecture, 1000 Burnett Avenue, Suite 140, Concord, CA 94520
p: 925.246.6419 f: 925.246.6495
REGISTERED PROFESSIONAL ENGINEER MICHAEL E. WALL E012307 EXP 9.30.06 ELECTRICAL STATE OF CALIFORNIA
LICENSED ARCHITECT RICHARD A. MANGUM, AIA. NO. C8685 REN. 12-31-05 STATE OF CALIFORNIA
architect

MICHAEL WALL ENGINEERING
619-231-0600
619-231-0640 (fax)
www.mwalleng.com
1341 India Street
San Diego, CA 92101
REGISTERED ELECTRICAL ENGINEERS
consultant

IDENTIFICATION STAMP DIVISION OF THE STATE ARCHITECT
APPL 01 106226
agency

SCIENCE BUILDING
LOS MEDANOS COLLEGE
Contra Costa Community College District
owner

MWE project number : 03158
file name: 03158-NS
drawn by: LF checked by: SH
date: NOVEMBER 15, 2004
Rev: date: description:

drawing title: NOTE SHEET
building no.:
LMC SCIENCE 313-023-112.01-0-00.00
drawing no.: LE1-00
drawing of

Nov 05, 2004 - 10:59am Z:\Proj03\03158\Dwg\03158-NS.dwg

Nov 05, 2004 - 11:00am, Z:\Proj03\03158\Dwg\03158-OP1A.dwg

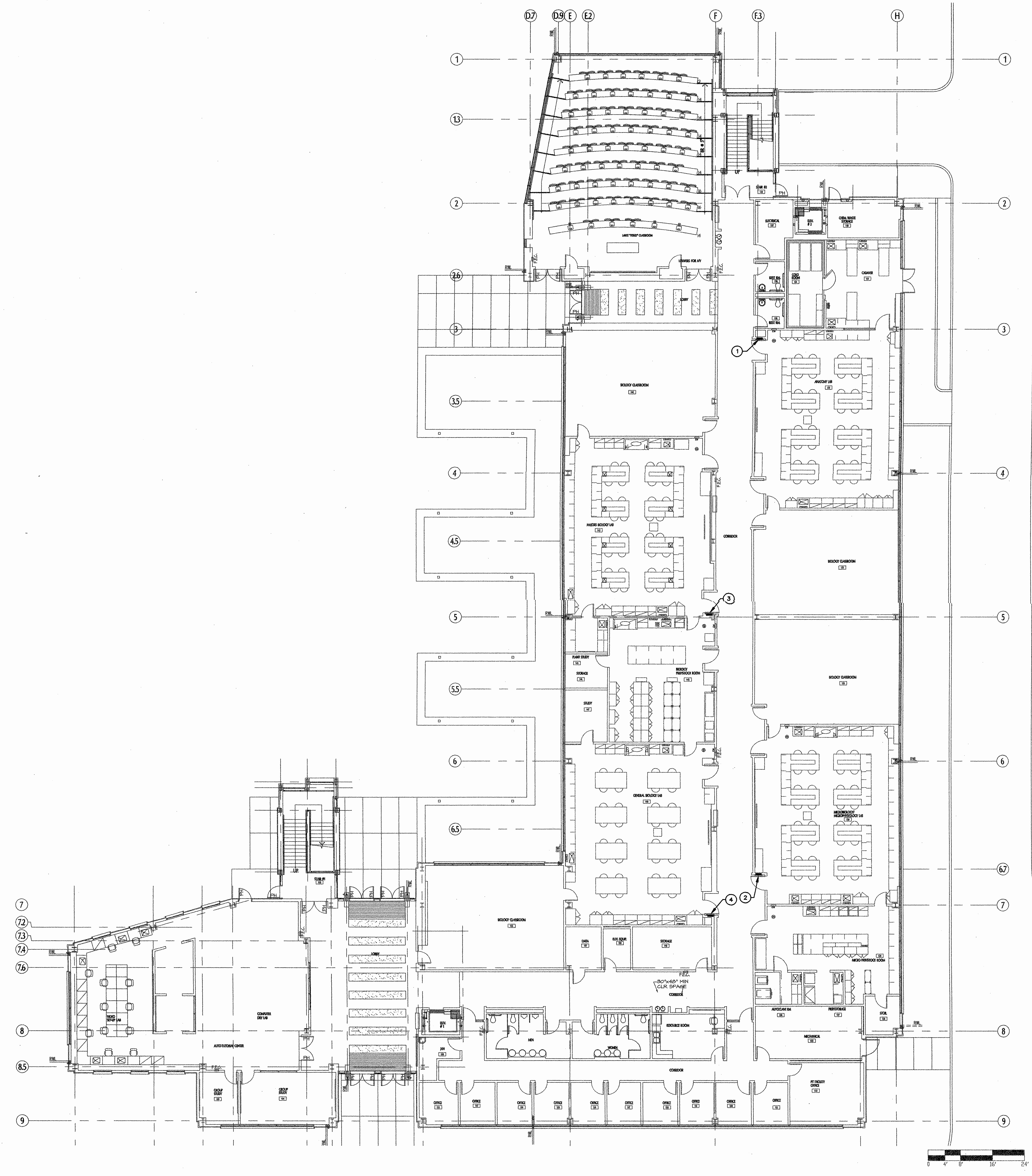

FIRST FLOOR OVERALL PLAN
SCALE 3/32" = 1'-0"

1

KEY NOTES:

1. LABORATORY PANEL 'LP1A'.
2. LABORATORY PANEL 'LP1B'.
3. LABORATORY PANEL 'LP1C'.
4. LABORATORY PANEL 'LP1D'.

GENERAL NOTES:

1. THIS SHEET IS FOR REFERENCE ONLY.

DESIGN NORTH
TRUE NORTH
CAMPUS NORTH

tBP architecture planning interiors management

tBP/Architecture
1000 Burnett Avenue, Suite 140
Concord, CA 94520
p: 925.246.6419 f: 925.246.6495

architect

MICHAEL WALL ENGINEERING
619-231-0600
619-231-0640 [fax]
www.mwalleng.com
1341 India Street
San Diego, CA 92101
REGISTERED ELECTRICAL ENGINEERS

consultant

IDENTIFICATION STAMP
DIVISION OF THE STATE ARCHITECT

agency

SCIENCE BUILDING
LOS MEDANOS COLLEGE

Contra Costa Community College District

owner

MWE project number : 0358
file name: 03158-OP1A
drawn by: LF checked by: SH
date: NOVEMBER 15, 2004
Rev. date: description:

drawing title: FIRST FLOOR OVERALL PLAN
building no:
LMC SCIENCE 313-023-112.01-0-00.00
drawing no: LE1-1
drawing of

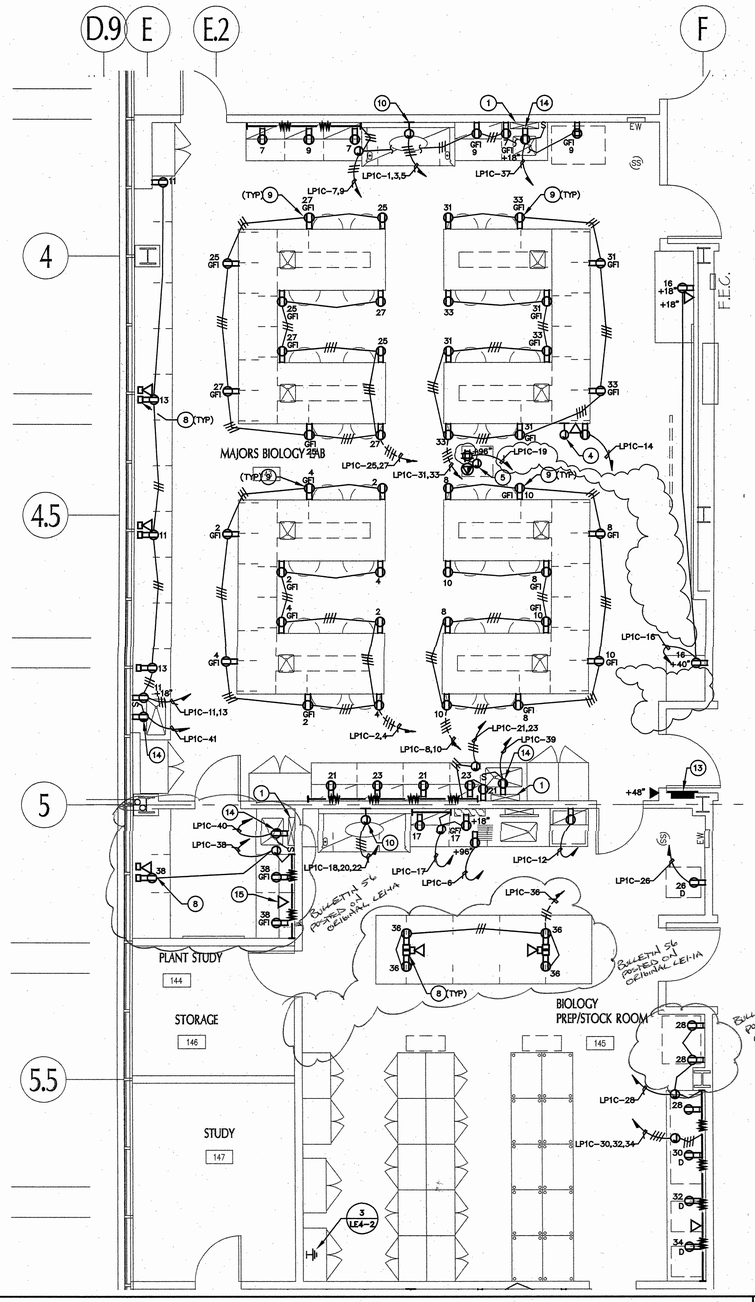

MAJORS BIOLOGY LAB & PREP/STOCK ROOM 1

SCALE: 1/4"=1'-0"

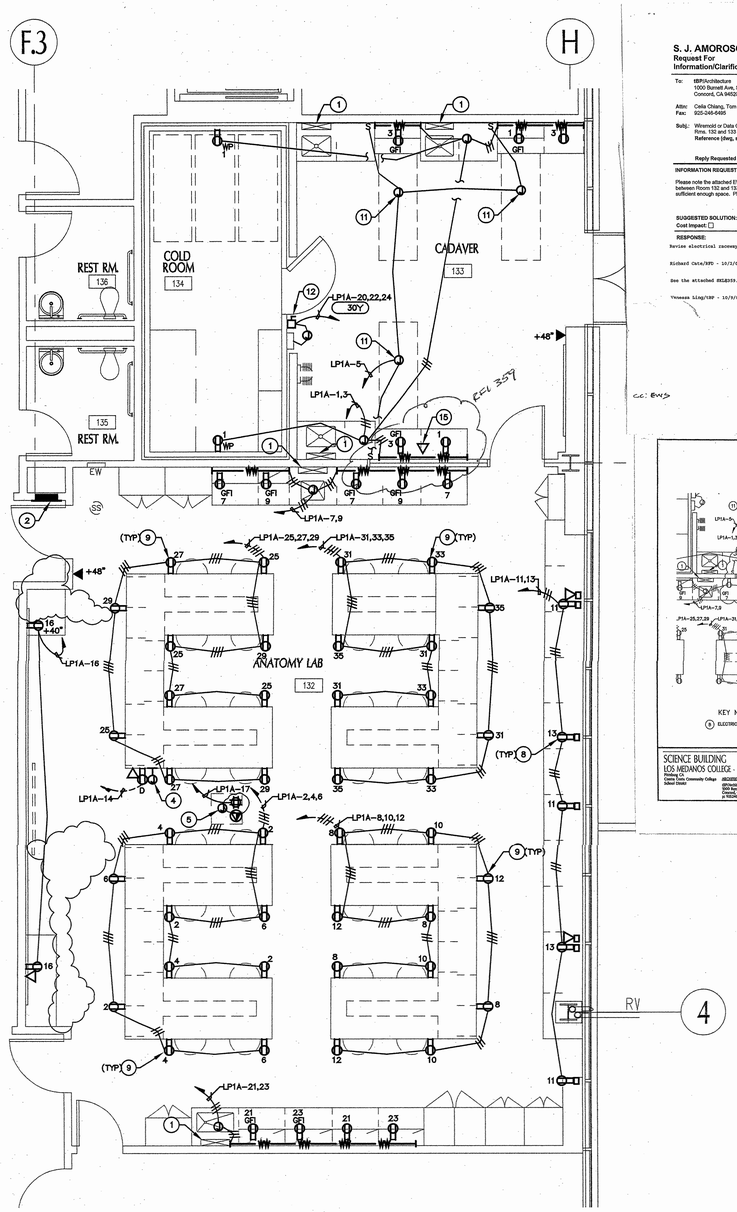

ANATOMY LABORATORY AND COLD ROOM 2

SCALE: 1/4"=1'-0"

KEY PLAN

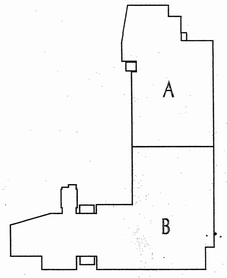

KEY NOTES:

1. PIPE DROP, UTILIZE FOR CONCEALMENT OF CONDUIT.
2. LABORATORY PANEL 'LP1A'.
3. NOT USED.
4. FACULTY INPUT POINT. PROVIDE JUNCTION BOX AND (2)1½"CONDUIT FROM FACULTY INPUT POINT TO WALL AND TO 6" ABOVE CEILING.
5. JUNCTION BOX AND POWER FOR CEILING MOUNTED PROJECTOR. SEE ELECTRICAL DRAWING (SHEET RE-2.2).
6. NOT USED.
7. NOT USED.
8. ELECTRICAL PEDESTAL. SEE DETAIL 6/LE4-1.
9. FLUSH MOUNT RECEPTACLE TO APRON ON FIXED BENCH, STUB CONDUITS UP FROM BELOW ROUTE THROUGH CHASE IN MILLWORK. SEE LF DRAWINGS FOR CABINET DETAILS.
10. PROVIDE J-BOX AND CONNECTION AT TOP OF CHEMICAL FUME HOOD AT +96". VERIFY MOUNTING HEIGHT WITH ARCHITECTURAL AND LF DRAWINGS BEFORE ROUGH-IN.
11. J-BOX FOR EXAM LIGHT. CONNECT AS PER MANUFACTURER'S RECOMMENDATIONS.
12. 30A 3P DISCONNECT FOR COLD ROOM. CONNECT AS PER MANUFACTURER'S RECOMMENDATIONS.
13. LABORATORY PANEL 'LP1C'.
14. GARBAGE DISPOSAL RECEPTACLE BELOW SINK. CONNECT TO SWITCH AS SHOWN. COORDINATE SWITCH LOCATION WITH LF DRAWINGS.
15. RECESS MOUNT TELE/DATA OUTLET ABOVE WIREWAY AT +48" TO CENTER.
16. RECESSED FLOOR BOX WITH COVER-WIREMOLD RFB4.
17. FLOOR BOX FOR AV USE ONLY. SEE ELECTRICAL DRAWING (SHEET RE-2.2) [(1)DUPLEX RECEPTACLE, (2)DATA, (2) 1-1/4" CONDUITS TO WALL TO ACCESSIBLE CEILING SPACE, +6"].

GENERAL NOTES:

1. AT WINDOW WALLS DESKTOP PEDESTALS TO BE WIREMOLD TABLE SOURCE WORK SURFACE MODULES. SEE DETAIL 6/LE4-1.
2. AT ISLAND BENCH LOCATIONS DESKTOP PEDESTAL TO BE HUBBELL 6685/6687 SERIES TYPE. SEE DETAIL 6/LE4-1.
3. AT ISLAND BENCHES WITHOUT PIPE DROP STUB ELECTRICAL AND TELE/DATA UP FROM BELOW INTO PIPE CHASE IN MILLWORK. SEE LF DRAWINGS FOR LOCATION AND DIMENSION OF CHASE.
4. ALL OUTLETS WITHIN 6' OF SINK TO BE GFI.

S. J. AMOROSO
Request For Information/Clarification

DSA FILE NO. 7-C1
DSA APPL. No. 01-106226

To: tBP/Architecture, 1000 Burnett Ave., Suite 140, Concord, CA 94520
Attn: Celia Chiang, Tom Beckett
Fax: 925-246-6495

Project: LOS MEDANOS COLLEGE SCIENCE BUILDING, Contra Costa Community College District
tBP ph: 20247.00

Subj.: Wiremold or Data Outlet in wall between Rms. 132 and 133
Reference (dwg, spec.): LE1-1a

RFI No: 359
Subcontractor RFI: EWS 35

Reply Requested By: 10/4/06

INFORMATION REQUESTED: Date: 9/27/06

Please note the attached EWS RFI No. 35 regarding the Wiremold and Data Outlet in the wall between Room 132 and 133 where the area between the Window and the Backsplash is not sufficient enough space. Please advise.

SUGGESTED SOLUTION:
Cost Impact: ☐ Schedule Impact: ☐ days By: Mark Delgado

RESPONSE: DATE:
Revise electrical raceway and data in conflict with windows to pedestals.

Richard Cote/RFD - 10/3/06

See the attached RSLESIF.1 from Michael Wall Engineering.

Vvneesa Ling/tBP - 10/3/06

RFI # 000
Page 1

EDWARD W. SCOTT ELECTRIC CO., INC.
415 BARRETT STREET
San Francisco, CA 94103-0314
Phone: (415) 626-0701 Fax: (415) 626-2837

REQUEST FOR INFORMATION

PROJECT: SCIENCE BLDG. B.F.I.# 35 R.F.I. Date 9/27/06
JOB: 2451 ACTUAL REPLY DATE
TO: MARK DELGADO POTENTIAL COST IMPACT
OF: ARCHITECT COST ___ SCHEDULE
REF/DWG: LE1-1A OTHER ___ LABOR
LOCATION: RM 133 NO IMPACT ___ MATERIAL

INFORMATION REQUESTED: THERE IS A WINDOW IN THE ADJACENT WALL BETWEEN RM 133 & 132. THERE IS NO ROOM TO INSTALL THE WIREMOLD OR DATA OUTLET ABOVE THE BACKSPLASH AND BEHIND THE WINDOW. THE OTHER WAY TO MOUNT THE WIREMOLD OR THE BACK BOXES IN BOTH ROOMS IN RM 133 THE DATA OUTLET CAN BE SHIFTED WEST AND BE INSTALLED NEXT TO THE EXIST LT SWITCH. PLEASE ADVISE

REPLY REQUIRED BY: ASAP SIGNED:
NOTE: IF NO REPLY IS RECEIVED BY US BY THE ABOVE NOTED DATE, A TIME EXTENSION WILL BE REQUIRED WITH POSSIBLE COST IMPACTS.

RESPONSE:

DATED: SIGNED:

INDUSTRIAL, COMMERCIAL WIRING & DESIGN
STATE CONTRACTOR LICENSE NO. 190426

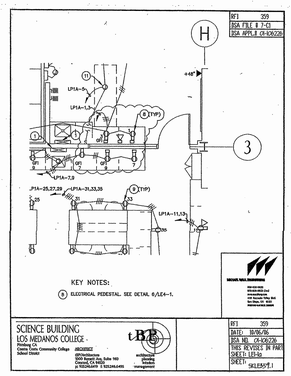

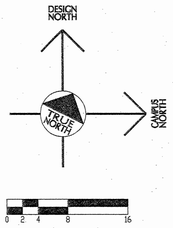

architecture
planning
interiors
management

tBP/Architecture
1000 Burnett Avenue, Suite 140
Concord, CA 94520
p: 925.246.6419 f: 925.246.6495
architect

MICHAEL WALL ENGINEERING
868-638-0600
868-638-0640 (fax)
www.mwaleng.com
4115 Sorrento Valley Blvd.
San Diego, CA 92121
REGISTERED ELECTRICAL ENGINEERS
REGISTERED PROFESSIONAL ENGINEER MICHAEL E. WALL E 012307 Exp. 9-30-06 ELECTRICAL STATE OF CALIFORNIA
consultant

agency

SCIENCE BUILDING LOS MEDANOS COLLEGE

Contra Costa Community College District

owner

MWE project number : 03158
file name: 03158-PP1A
drawn by: LF checked by: SH
date: NOVEMBER 15, 2004

Rev:	date:	description:
	3/15/06	BULLETIN #10B

drawing title: ENLARGED PLANS FIRST FLOOR - PART "A"
building no.: LMC SCIENCE 313-023-T12.01-0-00.00
drawing no: LE1-1a
drawing of

Aug 01, 2006 - 1:32pm, Z:\Proj03\03158\Dwg\03158-PP11A.dwg

S. J. AMOROSO
Request For
Information/Clarification

DSA FILE NO. 7-C1
DSA APPL. No. 01-106226

To: IBR/Architecture
1000 Burnett Ave, Suite 140
Concord, CA 94520

Attn: Celia Chiang, Tom Beckett
Fax: 925-246-6495

Subj.: Room 125 Receptacle at 96"

Reference (dwg, spec.): LE1-1B

Project: LOS MEDANOS COLLEGE
SCIENCE BUILDING
Contra Costa Community College District

IBR p/n: 20247.00

RFI No.: **388**

Subcontractor RFI: EWS 43

Reply Requested By: 10/26/06

INFORMATION REQUESTED: Date: 10/19/06

Please note the attached Edward Scott RFI No. 43 regarding the installation of a receptacle at 96" in Room 125. Please advise.

SUGGESTED SOLUTION:
Cost Impact: ☐ Schedule Impact: ☐ days By: Mark Delgado

RESPONSE: DATE:

Locate electrical receptacle on right side of pipe drop at wall +96"A.F.F.

Richard Cass/RFD - 10/23/06

RFI # 000
Page 1

M/E

389

EDWARD W. SCOTT ELECTRIC CO., INC.
435 HARRIET STREET
San Francisco, CA 94103-4914
Phone: (415) 626-0701 Fax: (415) 626-2837

REQUEST FOR INFORMATION

PROJECT: LMC SCIENCE Bldg. R.F.I.# 43 R.F.I. Date 10/18/06
JOB: 2451 ACTUAL REPLY DATE _____

TO: MARK DELGADO
GC: AMOROSO CONST.
REF.DWG: LE1.1B
LOCATION: Room 125/Det 5

POTENTIAL COST IMPACT
___ COST ___ SCHEDULE
___ OTHER ___ LABOR
___ NO IMPACT ___ MATERIAL

INFORMATION REQUESTED: NOTE: PIPE DROP ABOVE INSTALLED A RECEPTACLE 0 96" THIS IS A REWORKABLE OFFER. THERE WOULD HAVE TO BE ADDITIONAL PIPE DROP ON GRID LINE 7.

REPLY REQUIRED BY: 10/26/06 SIGNED: [illegible]
NOTE: IF NO REPLY IS RECEIVED BY US BY THE ABOVE NOTED DATE, A TIME EXTENSION WILL BE REQUIRED WITH POSSIBLE COST IMPACTS.

RESPONSE:

DATED: _____ SIGNED: _____

RFIDOC.89

INDUSTRIAL, COMMERCIAL WIRING & DESIGN
STATE CONTRACTOR LICENSE NO. 190436

S. J. AMOROSO
Request For Information/Clarification

DSA FILE NO. 7-C1
DSA APPL. No. 01-106226

To: IBP/Architecture
1000 Burnett Ave, Suite 140
Concord, CA 94520

Attn: Celia Chiang, Tom Beckett
Fax: 925-246-6495

Subj.: Ground in Bio. Prep Stock Room

Reference (dwg, spec.) E-4.2

Reply Requested By: 3/8/06

Project: LOS MEDANOS COLLEGE
SCIENCE BUILDING
Contra Costa Community College District

IBP p/n: 20247.00

RFI No: 171
Subcontractor RFI: EWS 13

INFORMATION REQUESTED: **Date:** 3/1/06

Please note the attached Edward Scott Electric RFI No. 13 regarding sheet E4.2 Detail 3 for Ground in the Biology Prep Stock Room. EWS believes that this should refer to Detail C due to the Ground being laid out under the Flammable Storage Locker. Please advise.

SUGGESTED SOLUTION:

Cost Impact: ☐ **Schedule Impact:** ☐ days **By:** Mark Delgado

RESPONSE: **DATE:**
Please see the attached responses from James Cooley/Michael Wall Engineering and Richard Cate/EFD

Vanessa Ling
IBP Architecture
3/08/06
Attachments: **By:**

TRANSMITTAL RECORD:

FROM	TO	DATE
S.J.AMOROSO	IBP / ARCHITECTURE	3/2/06
IBP / ARCHITECTURE	ENGINEER/CONSULTANT	
ENGINEER/CONSULTANT	IBP / ARCHITECTURE	
IBP / ARCHITECTURE	S.J. AMOROSO	
S.J. AMOROSO	ORIGINATOR	

EDWARD W. SCOTT ELECTRIC CO., INC.
435 HARRIET STREET
San Francisco, CA 94103-4914
Phone: (415) 626-0701 Fax: (415) 626-2837

REQUEST FOR INFORMATION

PROJECT: LMC SCIENCE BLDG. R.F.I.# 13 R.F.I. Date 3/1/06
JOB: 2451 ACTUAL REPLY DATE _____

TO: MARK DELGADO
OF: AMOROSO CONST.
REF. DWG: LE1-1a & E-4.2 (C)
LOCATION: BIO PREP STOCK RM

POTENTIAL COST IMPACT
___ COST ___ SCHEDULE
___ OTHER ___ LABOR
___ NO IMPACT ___ MATERIAL

INFORMATION REQUESTED: PLEASE REFER TO SHEET E-4.2 DETAIL "3" FOR GRD. IN THE BIO. PREP STOCK RM. DO THEY MEAN DETAIL "C" GRD. IS LAYED OUT UNDER THE FLAMMABLE STORAGE LOCKER. IS THIS THE INTENT? IF CORRECT DOES THE GRD ORIGINATE AT GRD BAR? PLEASE CLARIFY.

REPLY REQUIRED BY: ASAP SIGNED: [signature]
NOTE: IF NO REPLY IS RECEIVED BY US BY THE ABOVE NOTED DATE, A TIME EXTENSION WILL BE REQUIRED WITH POSSIBLE COST IMPACTS.

RESPONSE:

DATED: _____ SIGNED: _____

EFDOC39

INDUSTRIAL, COMMERCIAL WIRING & DESIGN
STATE CONTRACTOR LICENSE NO. 190436

Vanessa Ling

From: Richard H. Cate [rhc@rfd.com]
Sent: Wednesday, March 08, 2006 5:00 PM
To: Celia Chiang; Vanessa Ling
Cc: Sean E. Towne; Jim Cooley
Subject: FW: LMC RFI 171

Celia,
Please find our response to RFI#171.

Thanks,

Richard H. Cate

From: Jim Cooley [mailto:jcooley@mwalleng.com]
Sent: Wednesday, March 08, 2006 4:50 PM
To: Richard H. Cate
Subject: LMC RFI 171

Richard,

In response to the subject RFI, please note the following:

1. The project drawing sheet LE1-1a Flammable Storage Locker ground detail callout should read 3/LE4-2 vice 3/E-4.
2. Detail 3 of sheet LE4-2 shows a typical ground bus installation. Typical installation of the ground bus bar would be above the grid in the accessible ceiling area, or on the wall above the locker, not under the locker. Refer to Building Electrical drawings for building ground bus system installation and connection information.
3. Coordinate connection of equipment ground with Flammable Storage Locker manufacturer.

If you have any additional questions or comments, please don't hesitate to contact me.

Thanks,
Jim

James Cooley
Michael Wall Engineering
4115 Sorrento Valley Blvd.
San Diego, CA 92121
(858)638-0600 (Ph)
(858)638-0646 (Fax)

3/8/2006

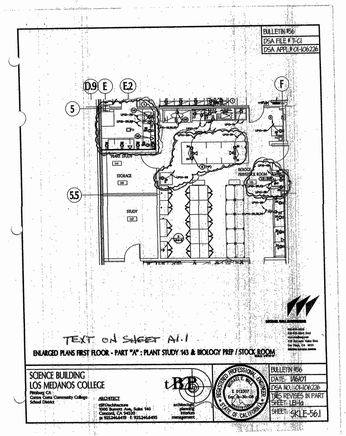

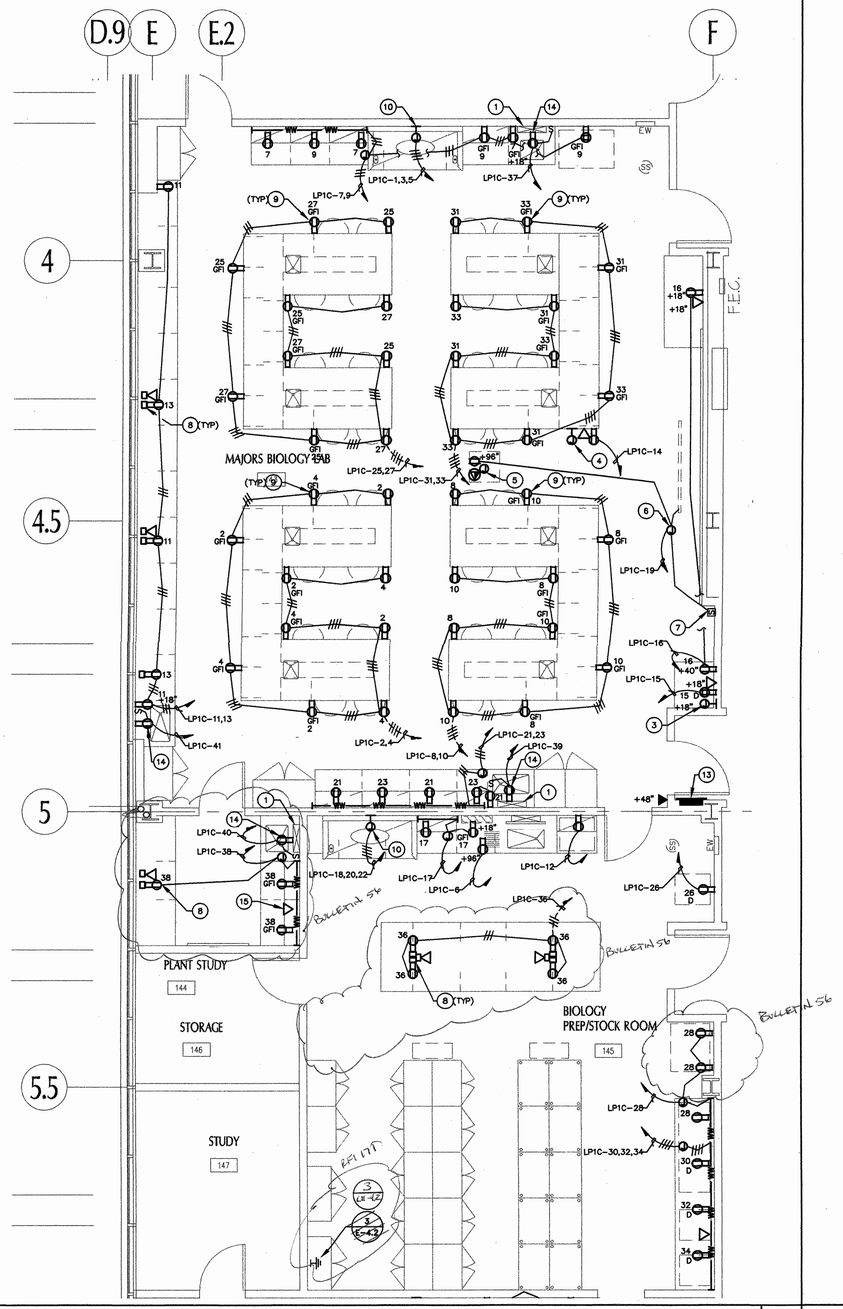

MAJORS BIOLOGY LAB & PREP/STOCK ROOM 1

SCALE 1/4"=1'-0"

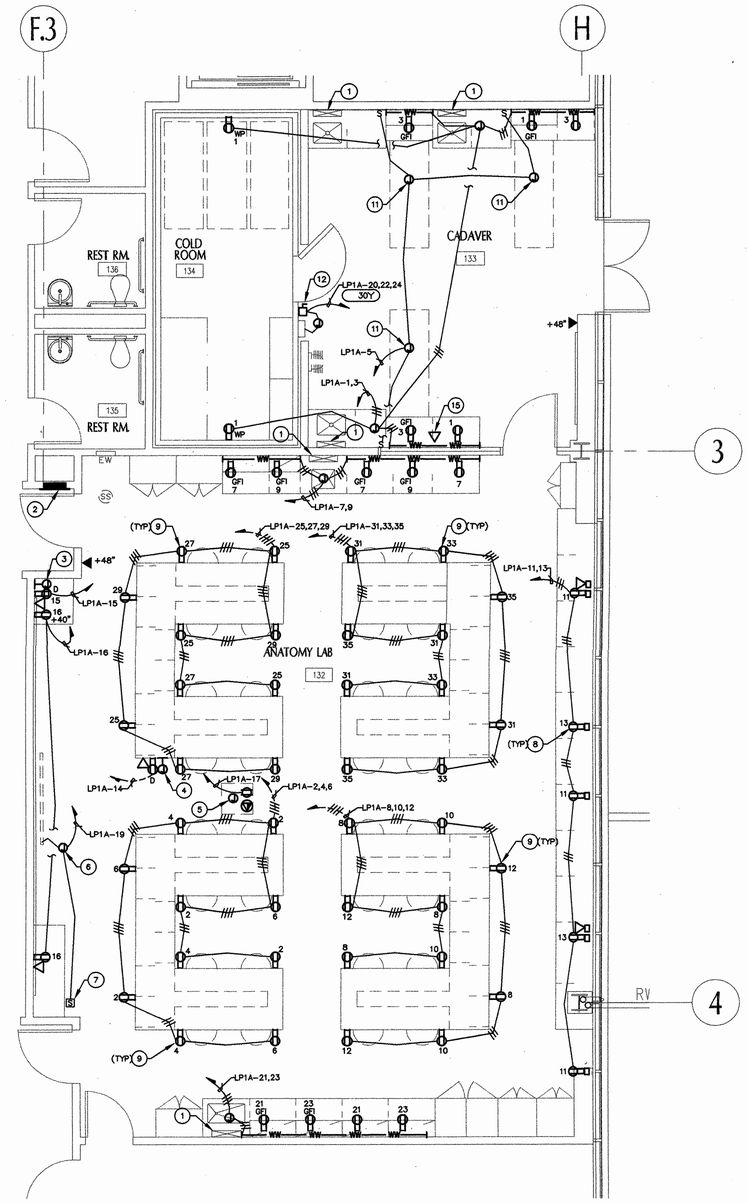

ANATOMY LABORATORY AND COLD ROOM 2

SCALE 1/4"=1'-0"

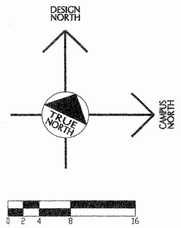

KEY PLAN

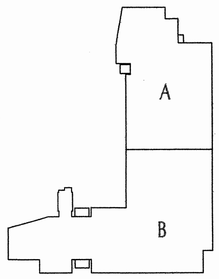

KEY NOTES:

1. PIPE DROP, UTILIZE FOR CONCEALMENT OF CONDUIT.
2. LABORATORY PANEL 'LP1A'.
3. PROVIDE JUNCTION BOX FOR AV CABINET. PROVIDE (1)1"C.O. TO FACULTY INPUT POINT. SEE NOTE 4. PROVIDE (1)1"CONDUIT STUB TO ACCESSIBLE CEILING FOR PROJECTOR. SEE NOTE 5. PROVIDE (1)¾"C.O. STUB TO ACCESSIBLE CEILING.
4. FACULTY INPUT POINT. PROVIDE JUNCTION BOX AND (1)1"CONDUIT TO AV CABINET. SEE NOTE 3.
5. JUNCTION BOX AND POWER FOR CEILING MOUNTED PROJECTOR.
6. JUNCTION BOX FOR MOTORIZED PROJECTION SCREEN. PROVIDE CONNECTION AS PER MANUFACTURER'S RECOMMENDATIONS.
7. PROVIDE UP/DOWN SCREEN SWITCH. CONNECT AS PER MANUFACTURER'S RECOMMENDATIONS.
8. ELECTRICAL PEDESTAL. SEE DETAIL 6/LE4-1.

KEY NOTES:

9. FLUSH MOUNT RECEPTACLE TO APRON ON FIXED BENCH. STUB CONDUITS UP FROM BELOW ROUTE THROUGH CHASE IN MILLWORK. SEE LF DRAWINGS FOR CABINET DETAILS.
10. PROVIDE J-BOX AND CONNECTION AT TOP OF CHEMICAL FUME HOOD AT +96". VERIFY MOUNTING HEIGHT WITH ARCHITECTURAL AND LF DRAWINGS BEFORE ROUGH-IN.
11. J-BOX FOR EXAM LIGHT. CONNECT AS PER MANUFACTURER'S RECOMMENDATIONS.
12. 30A 3P DISCONNECT FOR COLD ROOM. CONNECT AS PER MANUFACTURER'S RECOMMENDATIONS.
13. LABORATORY PANEL 'LP1C'.
14. GARBAGE DISPOSAL RECEPTACLE BELOW SINK. CONNECT TO SWITCH AS SHOWN. COORDINATE SWITCH LOCATION WITH LF DRAWINGS.
15. RECESS MOUNT TELE/DATA OUTLET ABOVE WIREWAY AT +48" TO CENTER.

GENERAL NOTES:

1. AT WINDOW WALLS DESKTOP PEDESTALS TO BE WIREMOLD TABLE SOURCE WORK SURFACE MODULES. SEE DETAIL 6/LE4-1.
2. AT ISLAND BENCH LOCATIONS DESKTOP PEDESTAL TO BE HUBBELL 6685/6687 SERIES TYPE. SEE DETAIL 6/LE4-1.
3. AT ISLAND BENCHES WITHOUT PIPE DROP STUB ELECTRICAL AND TELE/DATA UP FROM BELOW INTO PIPE CHASE IN MILLWORK. SEE LF DRAWINGS FOR LOCATION AND DIMENSION OF CHASE.
4. ALL OUTLETS WITHIN 6' OF SINK TO BE GFI.

tBP
architecture
planning
interiors
management

REGISTERED PROFESSIONAL ENGINEER
MICHAEL E. WALL
No. E-18530
ELECTRICAL
STATE OF CALIFORNIA

REGISTERED ARCHITECT
RICHARD A. BANCROFT, AIA
No. C-18555
STATE OF CALIFORNIA

tBP/Architecture
1000 Burnett Avenue, Suite 140
Concord, CA 94520
p: 925.246.6419 f: 925.246.6495

architect

MICHAEL WALL ENGINEERING
619-231-0600
619-231-0640 (fax)
www.mwalleng.com
1341 India Street
San Diego, CA 92101
REGISTERED ELECTRICAL ENGINEERS

consultant

IDENTIFICATION STAMP
DIVISION OF THE STATE ARCHITECT
APP. NO. 10 08 96
APP. INIT. [illegible]
DATE [illegible]

agency

SCIENCE BUILDING LOS MEDANOS COLLEGE

Contra Costa Community College District

owner

MWE project number : 03158

file name: 03158-PP1A

drawn by: LF checked by: SH

date: NOVEMBER 15, 2004

Rev:	date:	description:

drawing title: building no.:

ENLARGED PLANS FIRST FLOOR - PART "A"

LMC SCIENCE 313-023-112.01-0-00.00

drawing no.:

LE1-1a

drawing of

SEE NEW LE1-1A (6/11/05)

Nov. 05, 2004 - 11:01am, Z:\Proj03\03158\Dwg\03158-PP1A.dwg

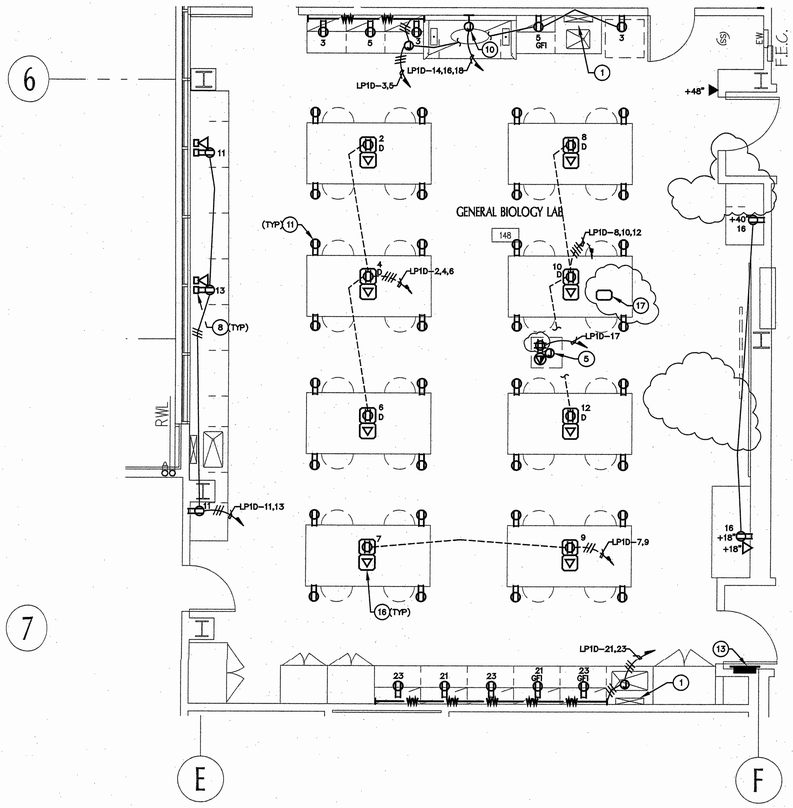

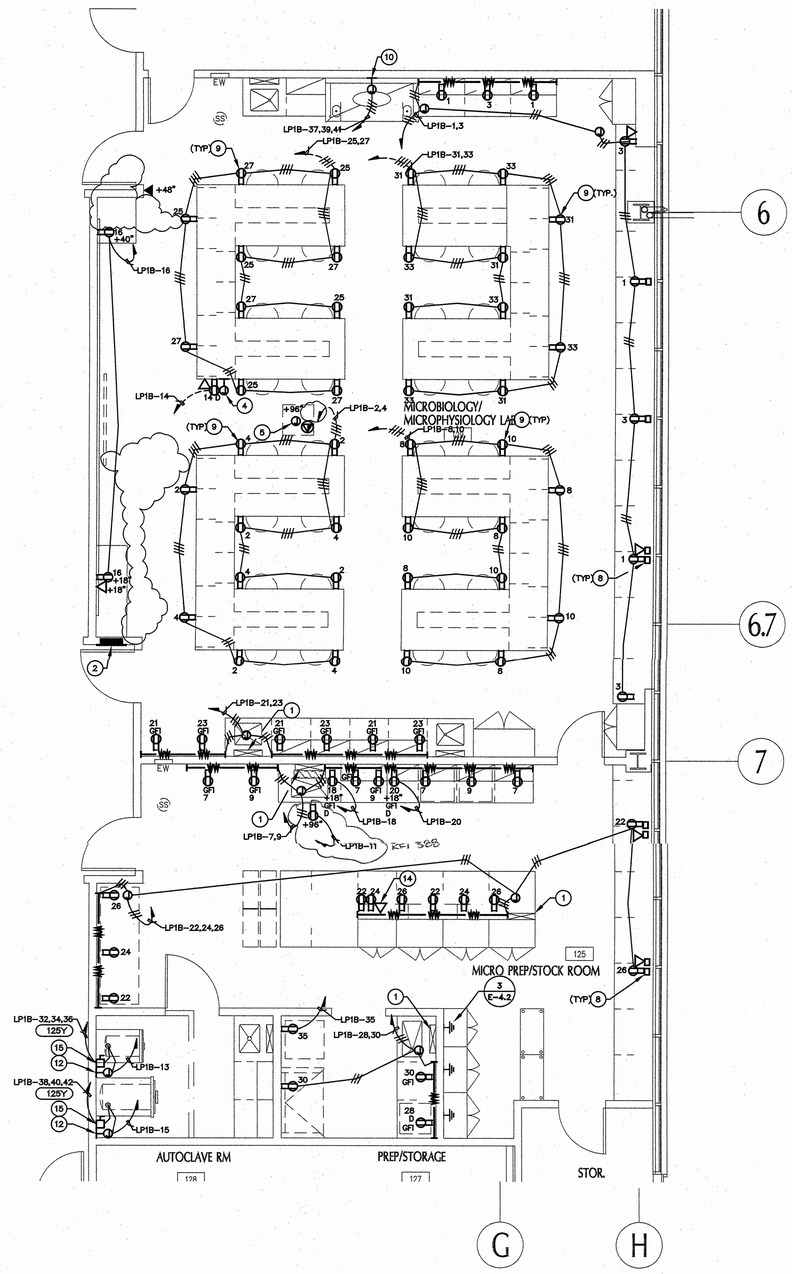

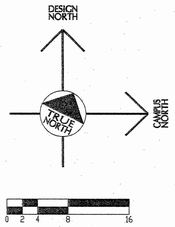

GENERAL BIOLOGY LABORATORY 1
SCALE 1/4"=1'-0"

MICRO PHYSIOLOGY LABORATORY AND PREP/STOCK ROOM 2
SCALE 1/4"=1'-0"

KEY PLAN

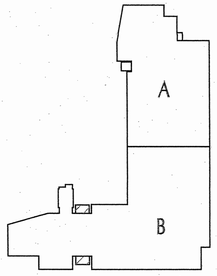

KEY NOTES:

1. PIPE DROP, UTILIZE FOR CONCEALMENT OF CONDUIT.
2. LABORATORY PANEL 'LP1B'.
3. NOT USED.
4. FACULTY INPUT POINT. PROVIDE JUNCTION BOX AND (2)1½"CONDUIT FROM FACULTY INPUT POINT TO WALL AND TO 6" ABOVE CEILING.
5. JUNCTION BOX AND POWER FOR CEILING MOUNTED PROJECTOR. SEE ELECTRICAL DRAWING (SHEET RE-2.2).
6. NOT USED.
7. NOT USED.
8. ELECTRICAL PEDESTAL. SEE DETAIL 6/LE4-1.
9. FLUSH MOUNT RECEPTACLE TO APRON ON FIXED BENCH. STUB CONDUITS UP FROM BELOW ROUTE THROUGH CHASE IN MILLWORK. SEE LF DRAWINGS FOR CABINET DETAILS.
10. PROVIDE J-BOX AND CONNECTION AT TOP OF CHEMICAL FUME HOOD AT +96". VERIFY MOUNTING HEIGHT WITH ARCHITECTURAL AND LF DRAWINGS BEFORE ROUGH-IN.
11. PROVIDE AND INSTALL JUNCTION BOX AND RECEPTACLE TO MOVEABLE TABLE. PROVIDE AND INSTALL S.O. CORD (8' MIN.) AND PLUG (5-20P). SEE DETAIL 8/LE4-1.
12. J-BOX AND POWER FOR AUTOCLAVE CONTROLS. CONNECT AS PER MANUFACTURER'S RECOMMENDATIONS.
13. LABORATORY PANEL 'LP1D'.
14. MOUNT TELE/DATA OUTLET ABOVE WIREMOLD AT +48" TO CENTER.
15. 200A 3P NEMA 3R DISCONNECT. CONNECT TO AUTOCLAVE AS PER MANUFACTURER'S RECOMMENDATIONS.
16. RECESSED FLOOR BOX WITH COVER, SUITABLE FOR SLAB ON GRADE INSTALLATION – WIREMOLD RFB4.
17. FLOOR BOX FOR AV USE ONLY. SEE ELECTRICAL DRAWING (SHEET RE-2.2) [(1)DUPLEX RECEPTACLE, (2)DATA, (2) 1-1/4" CONDUITS TO WALL TO ACCESSIBLE CEILING SPACE, +6"]

GENERAL NOTES:

1. AT WINDOW WALLS DESKTOP PEDESTALS TO BE WIREMOLD TABLE SOURCE WORK SURFACE MODULES. SEE DETAIL 6/LE4-1.
2. AT ISLAND BENCH LOCATIONS DESKTOP PEDESTAL TO BE HUBBELL 6685/6687 SERIES TYPE. SEE DETAIL 6/LE4-1.
3. AT ISLAND BENCHES WITHOUT PIPE DROP STUB ELECTRICAL AND TELE/DATA UP FROM BELOW INTO PIPE CHASE IN MILLWORK. SEE LF DRAWINGS FOR LOCATION AND DIMENSION OF CHASE.
4. ALL OUTLETS WITHIN 6' OF SINK TO BE GFI.

tBP
architecture
planning
interiors
management

tBP/Architecture
1600 Burnett Avenue, Suite 140
Concord, CA 94520
p: 925.246.6419 f: 925.246.6495

architect

MICHAEL WALL ENGINEERING
858-638-0600
858-638-0640 (fax)
www.mwalleng.com
4115 Sorrento Valley Blvd.
San Diego, CA 92121
REGISTERED ELECTRICAL ENGINEERS
MICHAEL E. WALL
E 012307
Exp. 9-30-06
ELECTRICAL
REGISTERED PROFESSIONAL ENGINEER
STATE OF CALIFORNIA

consultant

agency

SCIENCE BUILDING
LOS MEDANOS COLLEGE

Contra Costa Community College District

owner

MWE project number : 03158

file name: 03158-PP11B

drawn by: LF checked by: SH

date: NOVEMBER 15, 2004

Rev:	date:	description:
	3/15/06	BULLETIN #10C

drawing title: ENLARGED PLANS FIRST FLOOR - PART "B"

building no.: LMC SCIENCE 313-023-T12.01-0-00.00

drawing no: LE1-1b

drawing of

Aug 01, 2006 - 1:28pm, Z:\Proj03\03158\Dwg\03158-PP11B.dwg

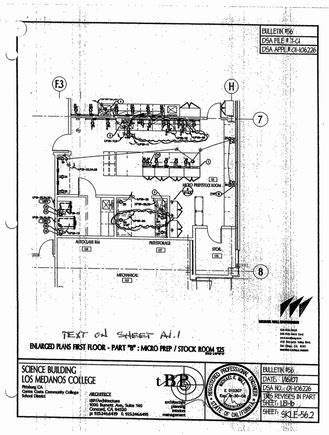
BULLETIN #06
DSA FILE # 75-G1
DSA APPL# 01-106226
E3
H
7
8
AUDIO/AV RM
PREPARAGE
STOR.
MECHANICAL
TEXT on SHEET A1.1
ENLARGED PLANS FIRST FLOOR - PART "B" : MICRO PREP / STOCK ROOM 125
SCIENCE BUILDING
LOS MEDANOS COLLEGE
Pittsburg CA
Contra Costa Community College District
ARCHITECT
tBP
BULLETIN #06
DATE: 08/07
DSA NO.: 01-106226
THIS DRAWING IS PART OF:
SHEET: SKLE-56.2

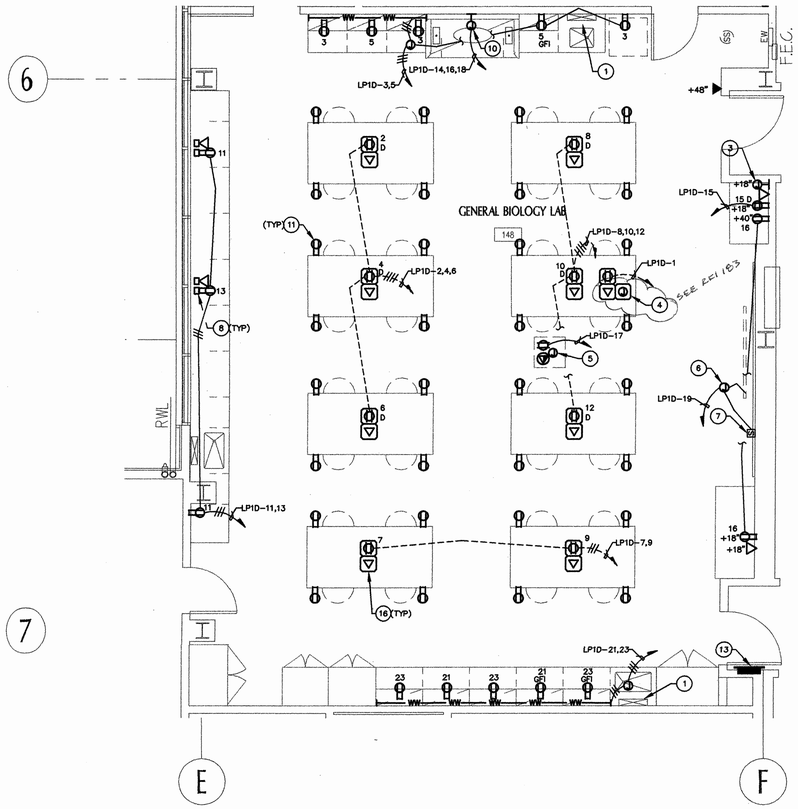

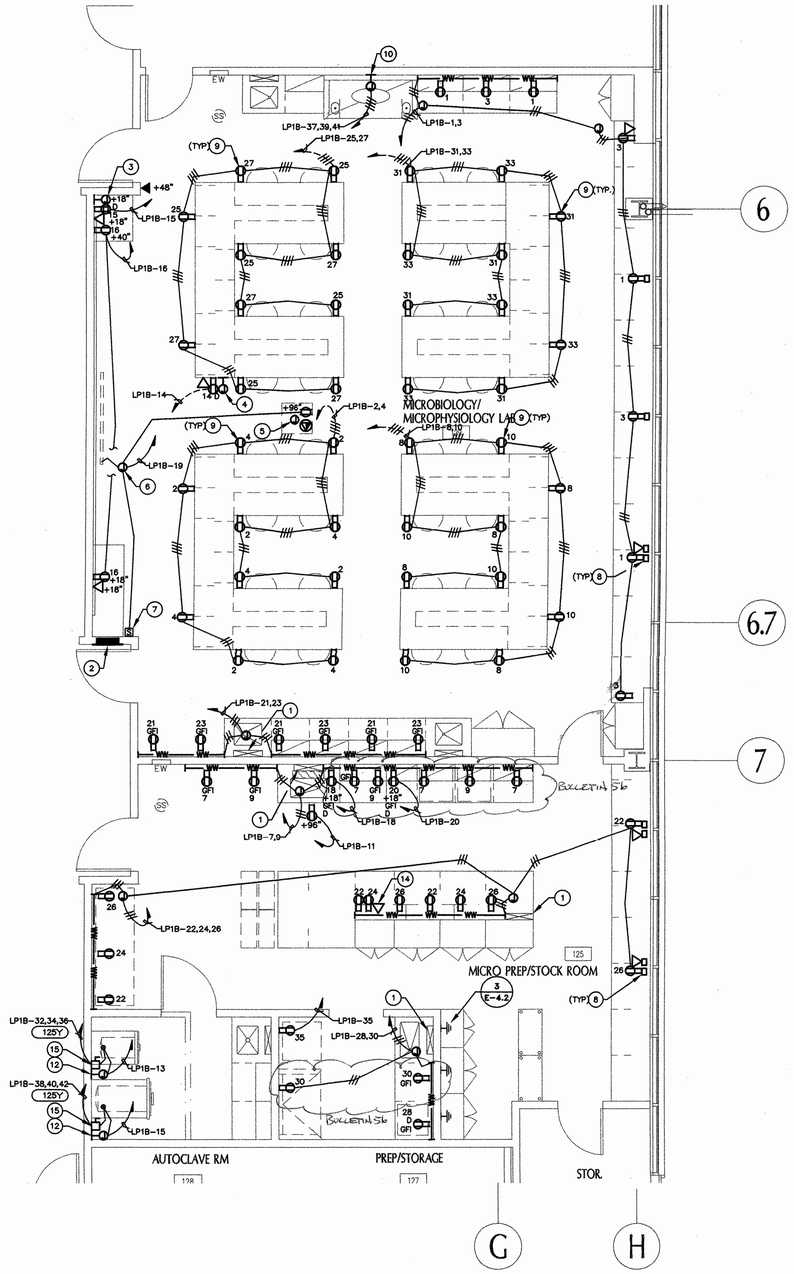

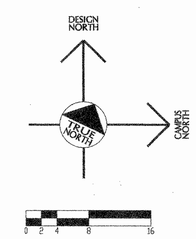

S. J. AMOROSO
Request For Information/Clarification

DSA FILE NO. 7-C1
DSA APPL. No. 01-106228

To: tBP/Architecture, 1000 Burnett Ave, Suite 140, Concord, CA 94520
Attn: Celia Chiang, Tom Beckett
Fax: 925-246-6495
Project: LOS MEDANOS COLLEGE SCIENCE BUILDING, Contra Costa Community College District
tBP p/n: 20247.00
Subj.: SOG Section B depressed slabs
Reference (dwg. spec.) : Bulletin 10B
RFI No: 183
Subcontractor RFI: EWS 15
Reply Requested By: 3/15/06

INFORMATION REQUESTED: Date: 3/8/06
Please note the attached Scott Electric RFI No. 15 regarding the 1-1/2" conduits to the faculty input point in rooms 148 and 129. Please advise.

SUGGESTED SOLUTION:

Cost Impact: ☐ Schedule Impact: ☐ days By: Mark Delgado

RESPONSE: See attached response. Note that Bulletin B10C is in process and will be issued addressing revisions to LE1-1b and E-2.2.
DATE: 3.08.06
By: C. Chiang/tBP

Attachments:

TRANSMITTAL RECORD:

FROM	TO	DATE
S.J. AMOROSO	tBP / ARCHITECTURE	3/8/06
tBP / ARCHITECTURE	ENGINEER/CONSULTANT	
ENGINEER/CONSULTANT	tBP / ARCHITECTURE	
tBP / ARCHITECTURE	S.J. AMOROSO	3.08.06
S.J. AMOROSO	ORIGINATOR	

RFI # 000
Page 1

EDWARD W. SCOTT ELECTRIC CO., INC.
435 HARRIET STREET
San Francisco, CA 94103-4914
Phone: (415) 626-0701 Fax: (415) 626-2837

REQUEST FOR INFORMATION

PROJECT: SCIENCE BLDG. R.F.I. # 15 R.F.I. Date 3/7/06
OS: 24251 ACTUAL REPLY DATE:

TO: MARK DELGADO
FP: AMOROSO CONST.
REF. DWG: BULLETIN # 10B (R)
LOCATION:

POTENTIAL COST IMPACT: ✓ COST, ✓ OTHER, NO IMPACT; ✓ SCHEDULE, ✓ LABOR, ✓ MATERIAL

INFORMATION REQUESTED: ITEM "15" ON BULLETIN # 10B (REVISED) CALLS FOR (2) 1½" CONDUITS FROM THE FACULTY INPUT POINT TO WALL AND TO 6" ABOVE CEILING AS PER NOTE 4 IN BDS. 13D. AND 14D. PLEASE NOTE THAT WE ARE NOW IN THE PROCESS OF INSTALLING CONDUITS IN BDS. 14N & 13N WHICH ALSO REQUIRE FACULTY INPUT POINTS. WILL THESE LOCATIONS ALSO REQUIRE 2 ADDITIONAL 1½" CONDUITS? PLEASE ADVISE.

REPLY REQUIRED BY: ASAP SIGNED:
NOTE: IF NO REPLY IS RECEIVED BY US BY THE ABOVE NOTED DATE, A TIME EXTENSION WILL BE REQUIRED WITH POSSIBLE COST IMPACTS.

RESPONSE:

DATED: SIGNED:

INDUSTRIAL, COMMERCIAL WIRING & DESIGN
STATE CONTRACTOR LICENSE NO. 190426

RFIDOC39

Project Memorandum

tBP Architecture Planning Interiors Management

Date: 03/08/2006
To: S.J. Amoroso, 390 Bridge Parkway, Redwood Shores CA 94065
Attn: Mark Delgado
Proj: LOS MEDANOS COLLEGE SCIENCE BUILDING, Contra Costa Community College District
Proj No.: 20247.007.4
DSA No.: 01-106226; File # 7-C1
From: Celia Chiang, tBP/Architecture
cc: T. Beckett, B. Harke, C. Ferrotta, file

RESPONSE TO RFI #183 – CONDUITS AT FACULTY INPUT POINTS AT LABS 129, 148

At Lab 129, note 4 on sheet LE1-1b will be revised to: "Provide J-box and (2) 1 ½" conduits from Faculty Input Point to wall and to +6" above ceiling".

At Lab 148, (2) floor boxes shown per note 4 on LE1-1b shall be deleted. (1) Mystery Electronics Floor Box (similar to that of note 21 on sheet RE-2.1, revised per Bulletin #10B, dated 03/07/06) will be added, with (2) 1 ½" conduits from floor box to +6" above accessible ceiling space".

Wall plates called out as notes 6 and 7 on E-2.2 shall be deleted in both labs 129 and 148.

J-box, data outlet and quad receptacle called out as note 3 on LE1-1b shall be deleted in both labs 129 and 148. (1) duplex receptacle at those locations to remain.

Location of total of (9) floor boxes in Lab 148 shall be as shown in SKA-20C.1 per Bulletin #10C (not yet issued).

Additional revisions to RE-21. will be addressed in Bulletin #10C.

1000 Burnett Avenue, Suite 140 • Concord, CA 94520-2058 • Phone: (925) 246-6419 • Fax: (925) 246-6495

GENERAL BIOLOGY LABORATORY 1
SCALED 1/4"=1'-0"

MICRO PHYSIOLOGY LABORATORY AND PREP/STOCK ROOM 2
SCALED 1/4"=1'-0"

KEY PLAN

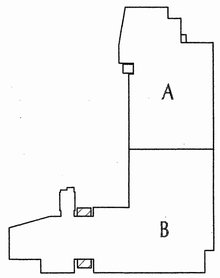

KEY NOTES:

1. PIPE DROP, UTILIZE FOR CONCEALMENT OF CONDUIT.
2. LABORATORY PANEL 'LP1B'.
3. PROVIDE JUNCTION BOX FOR AV CABINET. PROVIDE (1)1"C.O. TO FACULTY INPUT POINT, SEE NOTE 4. PROVIDE (1)1"CONDUIT STUB TO ACCESSIBLE CEILING FOR PROJECTOR. SEE NOTE 5. PROVIDE (1)2"C.O. STUB TO ACCESSIBLE CEILING. RFI 183
4. FACULTY INPUT POINT. PROVIDE JUNCTION BOX AND ~~(1)1"CONDUIT TO AV CABINET. SEE NOTE 3.~~ (2) FROM FACULTY INPUT POINT TO WALL AND TO 6" ABOVE CEILING. RFI 183
5. JUNCTION BOX AND POWER FOR CEILING MOUNTED PROJECTOR.
6. JUNCTION BOX FOR MOTORIZED PROJECTION SCREEN. PROVIDE CONNECTION AS PER MANUFACTURER'S RECOMMENDATIONS.
7. PROVIDE UP/DOWN SCREEN SWITCH. CONNECT AS PER MANUFACTURER'S RECOMMENDATIONS.
8. ELECTRICAL PEDESTAL. SEE DETAIL 6/LE4-1.

KEY NOTES:

9. FLUSH MOUNT RECEPTACLE TO APRON ON FIXED BENCH. STUB CONDUITS UP FROM BELOW ROUTE THROUGH CHASE IN MILLWORK. SEE LF DRAWINGS FOR CABINET DETAILS.
10. PROVIDE J-BOX AND CONNECTION AT TOP OF CHEMICAL FUME HOOD AT +96". VERIFY MOUNTING HEIGHT WITH ARCHITECTURAL AND LF DRAWINGS BEFORE ROUGH-IN.
11. PROVIDE AND INSTALL JUNCTION BOX AND RECEPTACLE TO MOVEABLE TABLE. PROVIDE AND INSTALL S.O. CORD (8' MIN.) AND PLUG (5-20P). SEE DETAIL 8/LE4-1.
12. J-BOX AND POWER FOR AUTOCLAVE CONTROLS. CONNECT AS PER MANUFACTURER'S RECOMMENDATIONS.
13. LABORATORY PANEL 'LP1D'.
14. MOUNT TELE/DATA OUTLET ABOVE WIREMOLD AT +48" TO CENTER.
15. 200A 3P NEMA 3R DISCONNECT. CONNECT TO AUTOCLAVE AS PER MANUFACTURER'S RECOMMENDATIONS.
16. RECESSED FLOOR BOX WITH COVER, SUITABLE FOR SLAB ON GRADE INSTALLATION – WIREMOLD RFB4-CI-1.

GENERAL NOTES:

1. AT WINDOW WALLS DESKTOP PEDESTALS TO BE WIREMOLD TABLE SOURCE WORK SURFACE MODULES. SEE DETAIL 6/LE4-1.
2. AT ISLAND BENCH LOCATIONS DESKTOP PEDESTAL TO BE HUBBELL 6685/6687 SERIES TYPE. SEE DETAIL 6/LE4-1.
3. AT ISLAND BENCHES WITHOUT PIPE DROP STUB ELECTRICAL AND TELE/DATA UP FROM BELOW INTO PIPE CHASE IN MILLWORK. SEE LF DRAWINGS FOR LOCATION AND DIMENSION OF CHASE.
4. ALL OUTLETS WITHIN 6' OF SINK TO BE GFI.

tBP
architecture planning interiors management
REGISTERED PROFESSIONAL ENGINEER MICHAEL E. WALL E012307 ELECTRICAL STATE OF CALIFORNIA
REGISTERED ARCHITECT MICHAEL A. BAUGHMAN NO. C-6685 STATE OF CALIFORNIA
tBP/Architecture
1000 Burnett Avenue, Suite 140
Concord, CA 94520
p: 925.246.6419 f: 925.246.6495
architect

MICHAEL WALL ENGINEERING
619-231-0600
619-231-0640 (fax)
www.mwalleng.com
1341 India Street
San Diego, CA 92101
REGISTERED ELECTRICAL ENGINEERS
consultant

IDENTIFICATION STAMP
DIVISION OF THE STATE ARCHITECT
APPROVED 10 6 2 2 6
BY: DSA
DATE: 1-12-05
agency

SCIENCE BUILDING
LOS MEDANOS COLLEGE

Contra Costa Community College District

owner

MWE project number : 03158
file name: 03158-PP11B
drawn by: LF checked by: SH
date: NOVEMBER 15, 2004

Rev:	date:	description:

drawing title: building no.:
ENLARGED PLANS
FIRST FLOOR - PART "B"

LMC SCIENCE 313-023-112.01-0-00.00
drawing no:
LE1-1b
drawing of

SEE NEW LE1-1b (Rev. 10B)

Nov. 05, 2004 – 11:01am, Z:\Proj03\03158\Dwg\03158-PP11B.dwg

S. J. AMOROSO
Request For Information/Clarification

DSA FILE NO. 7-C1
DSA APPL. No. 01-106226

To: tBP/Architecture
1000 Burnett Ave, Suite 140
Concord, CA 94520

Attn: Celia Chiang, Tom Beckett
Fax: 925-246-6495

Subj.: Mounting Heights for Outlets in Rooms 236 and 243
Reference (dwg, spec.): LE2-1a, LE2-1b

Reply Requested By: 9/29/06

Project: LOS MEDANOS COLLEGE
SCIENCE BUILDING
Contra Costa Community College District

tBP p/n: 20247.00

RFI No: 355
Subcontractor RFI: EWS 34

INFORMATION REQUESTED: Date: 9/22/06

Please note the attached EWS RFI No. 34 regarding mounting heights for outlets in rooms 236 and 243. Please advise.

SUGGESTED SOLUTION:
Cost Impact: ☐ Schedule Impact: ☐ days By: Mark Delgado

RESPONSE: DATE:

Response to RFI #355 to state:

In Room 236, mount electrical and data outlets above counter top 4+43"A.F.F. to the bottom of the outlet.
In Room 243, mount electrical outlet above counter top 4+43"A.F.F. to the bottom of the outlet.

Richard H. Cate/RFD - 9/27/06

RFI # 000
Page 1

EDWARD W. SCOTT ELECTRIC CO., INC.
458 HARRIET STREET
San Francisco, CA 94103-4914
Phone: (415) 626-0701 Fax: (415) 626-2837

REQUEST FOR INFORMATION

PROJECT: SCIENCE BLDG. L.M.C. R.F.I.# 34 R.F.I. Date 9/21/06.
JOB: 2451 ACTUAL REPLY DATE

TO: MARK DELGADO
OF: A. AMOROSO CONST.
REF: DWG: LE2-1a, LE2-1b.
LOCATION:

POTENTIAL COST IMPACT
___ COST ✓ SCHEDULE
___ OTHER ___ LABOR
___ NO IMPACT ___ MATERIAL

INFORMATION REQUESTED: PLEASE CLARIFY THE MOUNTING HEIGHTS FOR THE FOLLOWING OUTLETS. SHOULD THEY BE ABOVE THE COUNTERS OR UNDER AT 4'-18". RECEPT. IN RM 243 NORTH WALL. (SKETCH LE2-1b) RECEPT. IN RM 236 NORTH WALL. RECEPT & DATA OUTLETS WEST WALL. (SKETCH LE2-1a.)

REPLY REQUIRED BY: ASAP SIGNED:
NOTE: IF NO REPLY IS RECEIVED BY US BY THE ABOVE NOTED DATE, A TIME EXTENSION WILL BE REQUIRED WITH FORMICE COST IMPACTS.

RESPONSE:

DATED: SIGNED:

EFDOC.59

INDUSTRIAL, COMMERCIAL WIRING & DESIGN
STATE CONTRACTOR LICENSE NO. 194616

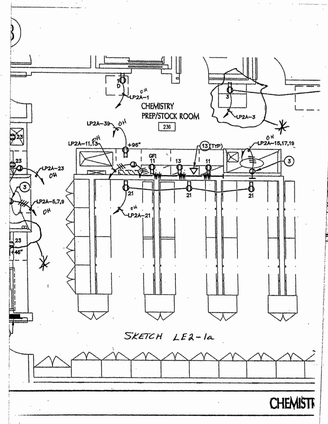

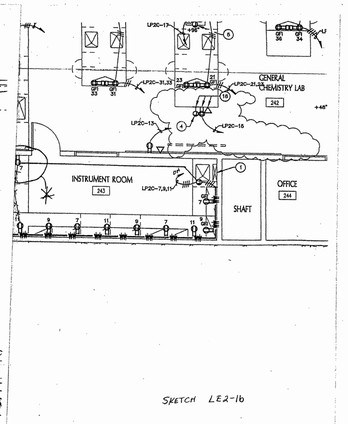

SKETCH LE2-1b

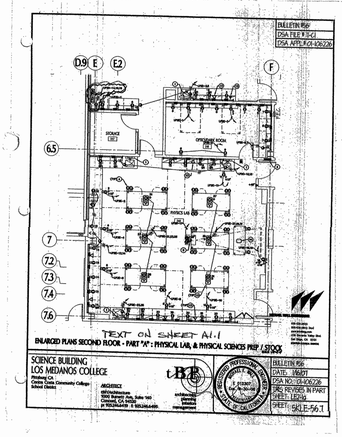

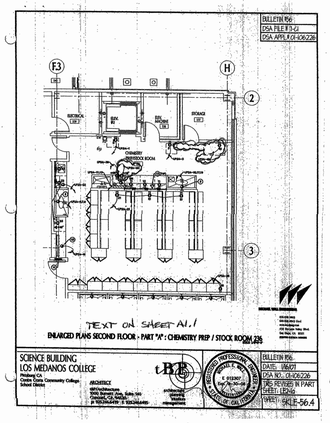

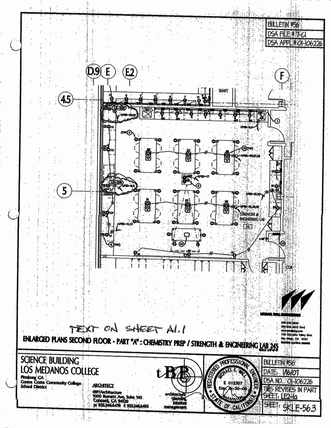

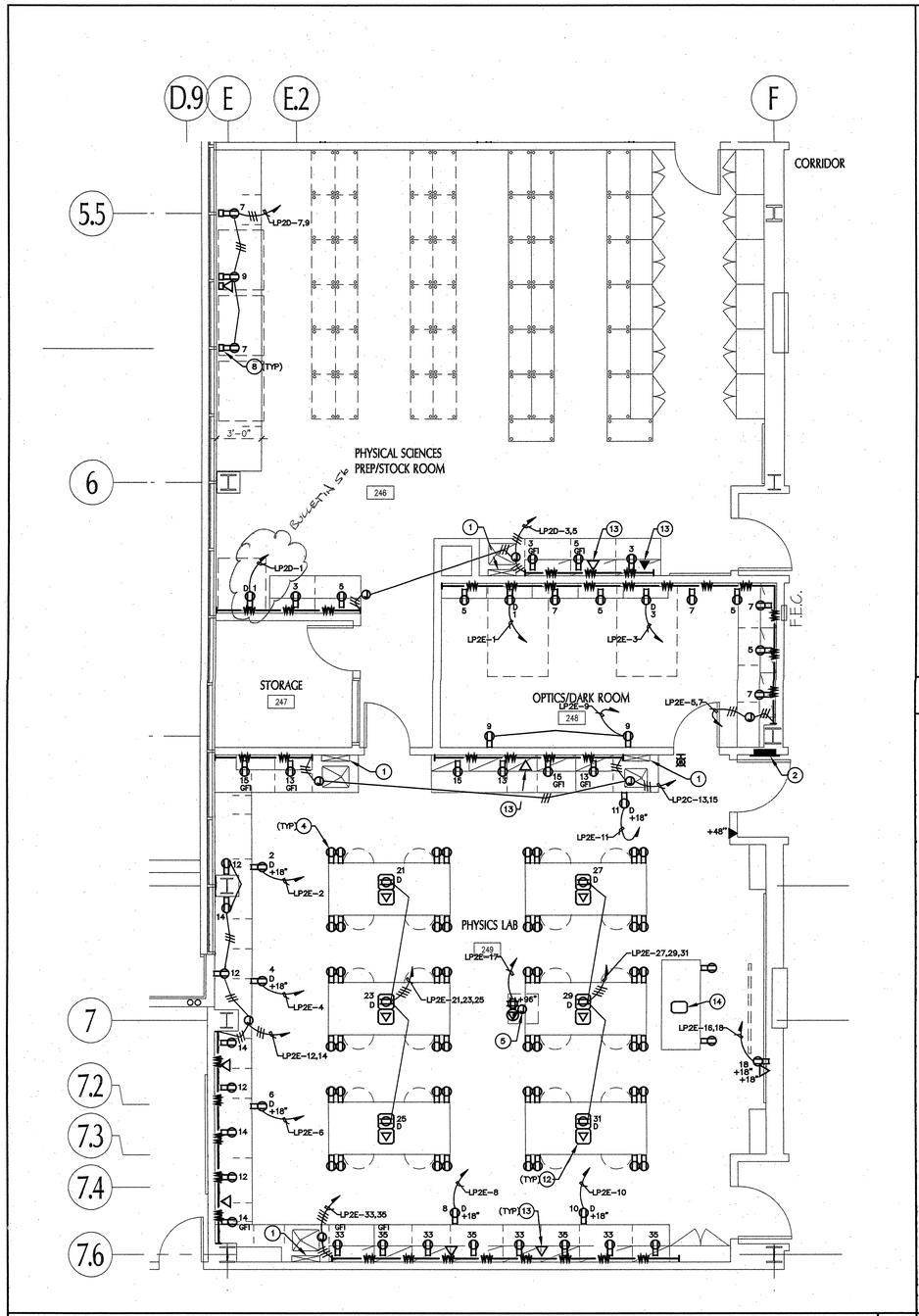

PHYSICS LABORATORY, OPTICS ROOM, AND PHYSICS PREP/STOCK ROOM | 1

SCALED 1/4"=1'-0"

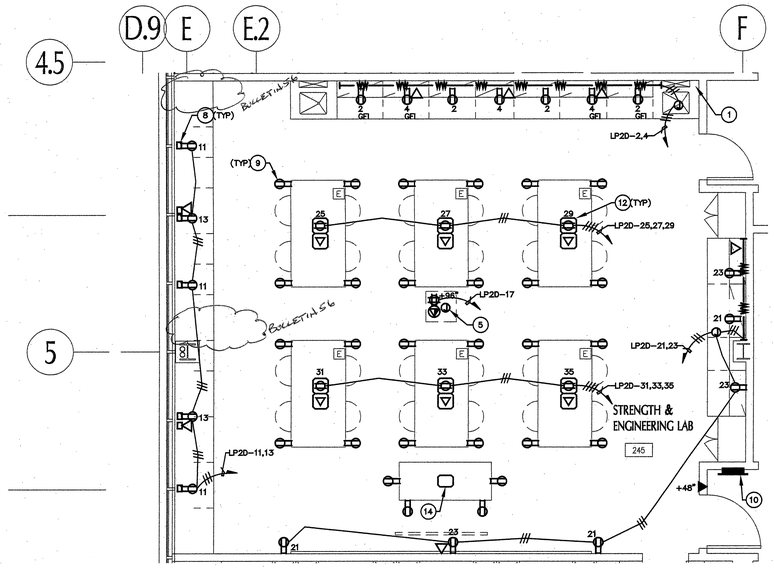

STRENGTH AND ENGINEERING LABORATORY | 2

SCALED 1/4"=1'-0"

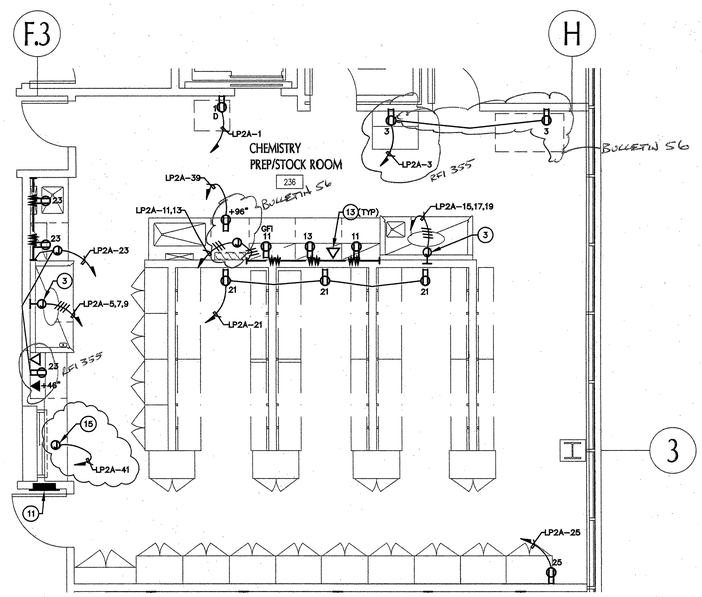

CHEMISTRY PREP/STOCK ROOM | 3

SCALED 1/4"=1'-0"

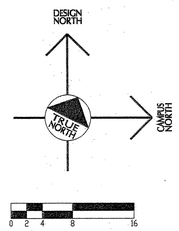

KEY PLAN

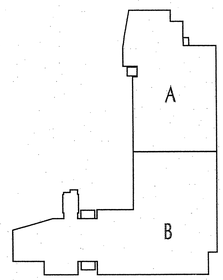

KEY NOTES:

1. PIPE DROP, UTILIZE FOR CONCEALMENT OF CONDUIT.
2. LABORATORY PANEL 'LP2E'.
3. PROVIDE J-BOX AND CONNECTION AT TOP OF CHEMICAL FUME HOOD AT +96". VERIFY MOUNTING HEIGHT WITH ARCHITECTURAL AND LF DRAWINGS BEFORE ROUGH-IN.
4. PROVIDE AND INSTALL JUNCTION BOX AND RECEPTACLE TO MOVEABLE TABLE. PROVIDE AND INSTALL S.O. CORD (8' MIN.) AND PLUG (5-20P). SEE DETAIL 8/LE4-1.
5. JUNCTION BOX AND POWER FOR CEILING MOUNTED PROJECTOR. SEE ELECTRICAL DRAWING (SHEET RE-2.2).
6. NOT USED.
7. NOT USED.
8. ELECTRICAL PEDESTAL. SEE DETAIL 6/LE4-1.
9. PROVIDE AND INSTALL JUNCTION BOX AND RECEPTACLE TO MOVEABLE TABLE. PROVIDE AND INSTALL S.O. CORD (8' MIN.) AND PLUG (5-20P). SEE DETAIL 8/LE4-1.
10. LABORATORY PANEL 'LP2D'.
11. LABORATORY PANEL 'LP2A'.
12. RECESSED SHALLOW FLOOR BOX WITH COVER WIREMOLD RFB4.
13. RECESS MOUNT TELE/DATA OUTLET ABOVE WIREWAY AT +48" TO CENTER.
14. FLOOR BOX FOR AV USE ONLY. SEE ELECTRICAL DRAWING (SHEET RE-2.2). [(1) DUPLEX RECEPTACLE, (2) DATA, (2) 1-1/4" CONDUITS TO WALL TO ACCESSIBLE CEILING SPACE, +6"].
15. PROVIDE 120V CONNECTION TO ROLL-UP DOOR MOTOR AND CONTROL SYSTEM PER MANUFACTURER'S RECOMMENDATIONS. COORDINATE LOCATION AND REQUIREMENTS WITH EQUIPMENT INSTALLER.

GENERAL NOTES:

1. AT WINDOW WALLS DESKTOP PEDESTALS TO BE WIREMOLD TABLE SOURCE WORK SURFACE MODULES. SEE DETAIL 6/LE4-1.
2. AT ISLAND BENCH LOCATIONS DESKTOP PEDESTAL TO BE HUBBELL 6685/6687 SERIES TYPE. SEE DETAIL 6/LE4-1.
3. AT ISLAND BENCHES WITHOUT PIPE DROP STUB ELECTRICAL AND TELE/DATA UP FROM BELOW INTO PIPE CHASE IN MILLWORK. SEE LF DRAWINGS FOR LOCATION AND DIMENSION OF CHASE.
4. ALL OUTLETS WITHIN 6' OF SINK TO BE GFI.

tBP
architecture
planning
interiors
management

tBP/Architecture
1000 Burnett Avenue, Suite 140
Concord, CA 94520
p: 925.246.6419 f: 925.246.6495

architect

MICHAEL WALL ENGINEERING
858-638-0600
858-638-0640 (fax)
www.mwalleng.com
4115 Sorrento Valley Blvd.
San Diego, CA 92121
REGISTERED ELECTRICAL ENGINEERS

REGISTERED PROFESSIONAL ENGINEER
MICHAEL E. WALL
E 012307
Exp. 9-30-06
ELECTRICAL
STATE OF CALIFORNIA

consultant

agency

SCIENCE BUILDING
LOS MEDANOS COLLEGE

Contra Costa Community College District

owner

MWE project number : 03158

file name: 03158-NS

drawn by: LF checked by: SH

date: NOVEMBER 15, 2004

Rev:	date:	description:
	5/31/06	BULLETIN #10D

drawing title: building no:

ENLARGED PLANS
SECOND FLOOR-PART "A"

LMC SCIENCE 313-023-112.01-0-00.00

drawing no:

LE2-1a

drawing of

Aug 01, 2006 - 1:31pm, Z:\Proj03\03158\Dwg\03158-PP21A.dwg

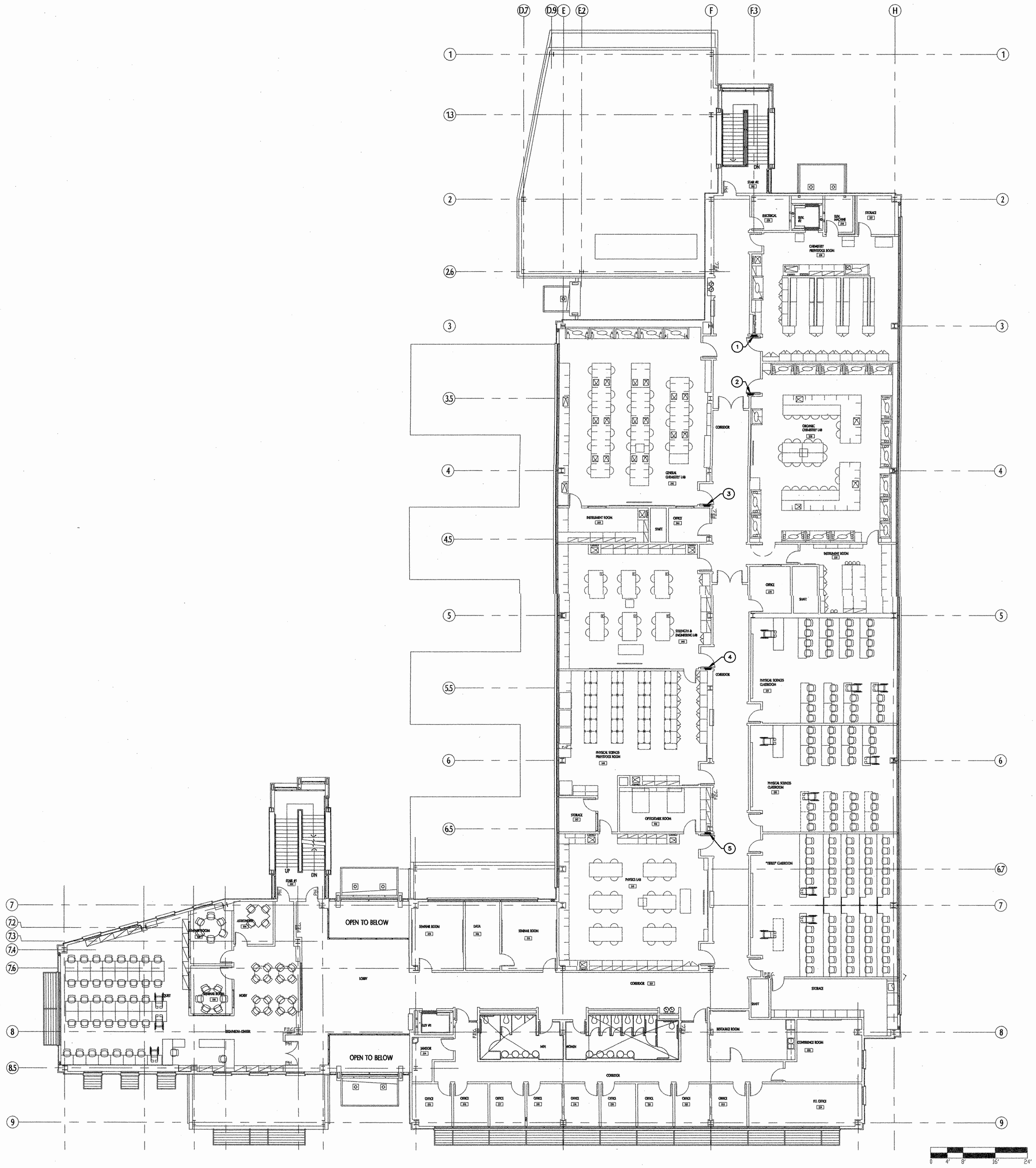

KEY NOTES:

1. LABORATORY PANEL 'LP2A'.
2. LABORATORY PANEL 'LP2B'.
3. LABORATORY PANEL 'LP2C'.
4. LABORATORY PANEL 'LP2D'.
5. LABORATORY PANEL 'LP2E'.

GENERAL NOTES:

1. THIS SHEET IS FOR REFERENCE ONLY.

DESIGN NORTH
TRUE NORTH
CAMPUS NORTH

SECOND FLOOR OVERALL PLAN
SCALED 3/32" = 1'-0"

1

tBP
architecture
planning
interiors
management

REGISTERED PROFESSIONAL ENGINEER
MICHAEL E. WALL
E 012307
ELECTRICAL
STATE OF CALIFORNIA

REGISTERED ARCHITECT
MICHAEL E. WALL, AIA
NO. C-6595
STATE OF CALIFORNIA

tBP/Architecture
1000 Burnett Avenue, Suite 140
Concord, CA 94520
p: 925.246.6419 f: 925.246.6495

architect

MICHAEL WALL ENGINEERING
619-231-0600
619-231-0640 (fax)
www.mwalleng.com
1341 India Street
San Diego, CA 92101
REGISTERED ELECTRICAL ENGINEERS

consultant

IDENTIFICATION STAMP
DIVISION OF THE STATE ARCHITECT
APPL NO. 10 6 8 2 6
INIT. 11/04/04

agency

SCIENCE BUILDING
LOS MEDANOS COLLEGE

Contra Costa Community College District

owner

MWE project number : 03158
file name: 03158-DP2A
drawn by: LF checked by: SH
date: NOVEMBER 15, 2004

Rev:	date:	description:

drawing title: SECOND FLOOR OVERALL PLAN
building no.: LMC SCIENCE 313-023-T12.01-0-00.00
drawing no.: LE2-1
drawing of

Nov 05, 2004 – 11:00am, Z:\Proj03\03158\Dwg\03158-DP2A.dwg

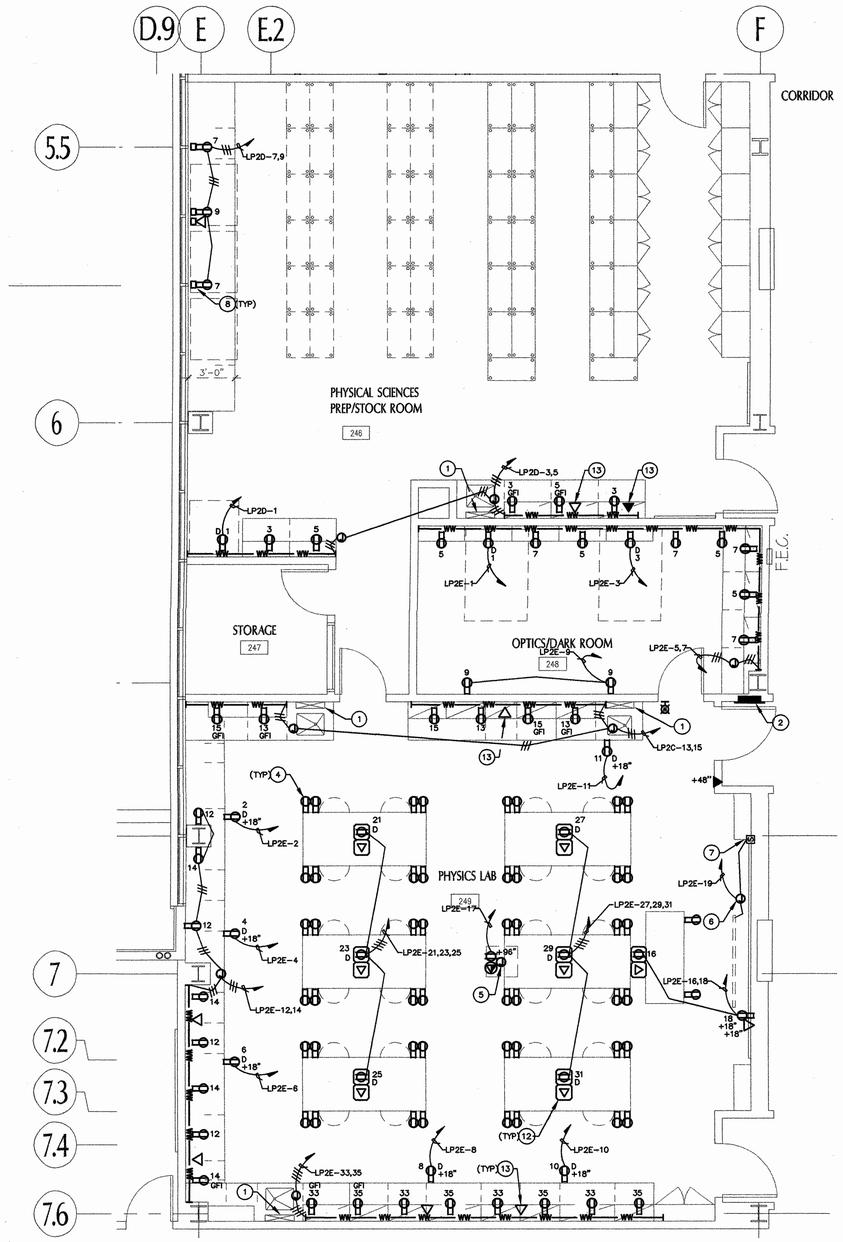

PHYSICS LABORATORY, OPTICS ROOM, AND PHYSICS PREP/STOCK ROOM | 1

SCALED 1/4"=1'-0"

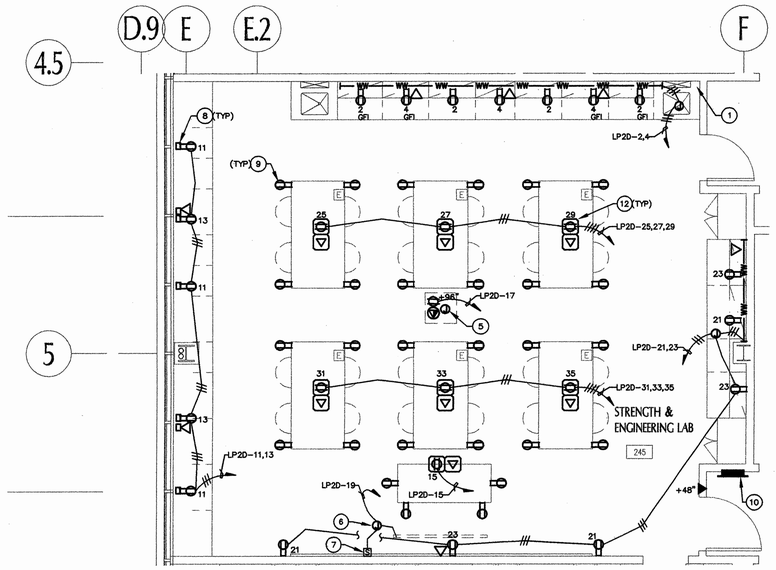

STRENGTH AND ENGINEERING LABORATORY | 2

SCALED 1/4"=1'-0"

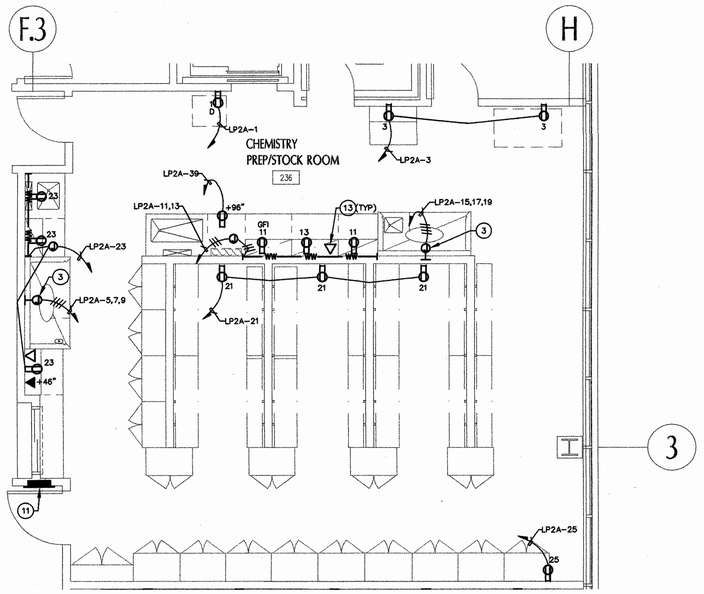

CHEMISTRY PREP/STOCK ROOM | 3

SCALED 1/4"=1'-0"

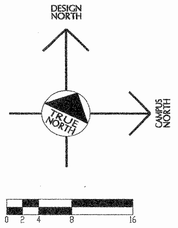

KEY PLAN

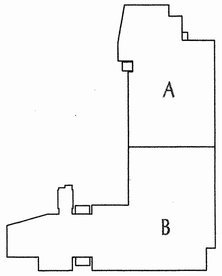

KEY NOTES:

1. PIPE DROP, UTILIZE FOR CONCEALMENT OF CONDUIT.
2. LABORATORY PANEL 'LP2E'.
3. PROVIDE J-BOX AND CONNECTION AT TOP OF CHEMICAL FUME HOOD AT +96". VERIFY MOUNTING HEIGHT WITH ARCHITECTURAL AND LF DRAWINGS BEFORE ROUGH-IN.
4. PROVIDE AND INSTALL JUNCTION BOX AND RECEPTACLE TO MOVEABLE TABLE. PROVIDE AND INSTALL S.O. CORD (8' MIN.) AND PLUG (5-20P). SEE DETAIL 8/LE4-1.
5. JUNCTION BOX AND POWER FOR CEILING MOUNTED PROJECTOR.
6. JUNCTION BOX FOR MOTORIZED PROJECTION SCREEN. PROVIDE CONNECTION AS PER MANUFACTURER'S RECOMMENDATIONS.
7. PROVIDE UP/DOWN SCREEN SWITCH. CONNECT AS PER MANUFACTURER'S RECOMMENDATIONS.
8. ELECTRICAL PEDESTAL. SEE DETAIL 6/LE4-1.

KEY NOTES:

9. PROVIDE AND INSTALL JUNCTION BOX AND RECEPTACLE TO MOVEABLE TABLE. PROVIDE AND INSTALL S.O. CORD (8' MIN.) AND PLUG (5-20P). SEE DETAIL 8/LE4-1.
10. LABORATORY PANEL 'LP2D'.
11. LABORATORY PANEL 'LP2A'.
12. RECESSED SHALLOW FLOOR BOX WITH COVER WIREMOLD RFB4-SS.
13. RECESS MOUNT TELE/DATA OUTLET ABOVE WIREWAY AT +48" TO CENTER.

GENERAL NOTES:

1. AT WINDOW WALLS DESKTOP PEDESTALS TO BE WIREMOLD TABLE SOURCE WORK SURFACE MODULES. SEE DETAIL 6/LE4-1.
2. AT ISLAND BENCH LOCATIONS DESKTOP PEDESTAL TO BE HUBBELL 6685/6687 SERIES TYPE. SEE DETAIL 6/LE4-1.
3. AT ISLAND BENCHES WITHOUT PIPE DROP STUB ELECTRICAL AND TELE/DATA UP FROM BELOW INTO PIPE CHASE IN MILLWORK. SEE LF DRAWINGS FOR LOCATION AND DIMENSION OF CHASE.
4. ALL OUTLETS WITHIN 6' OF SINK TO BE GFI.

architecture
planning
interiors
management

REGISTERED PROFESSIONAL ENGINEER MICHAEL E. WALL E-17307 ELECTRICAL STATE OF CALIFORNIA

LICENSED ARCHITECT NO. C-8695 STATE OF CALIFORNIA

tBP/Architecture
1900 Burnett Avenue, Suite 140
Concord, CA 94520
p: 925.246.6419 f: 925.246.6495

architect

MICHAEL WALL ENGINEERING
619-231-0600
619-231-0640 (fax)
www.mwalleng.com
1341 India Street
San Diego, CA 92101
REGISTERED ELECTRICAL ENGINEERS

consultant

IDENTIFICATION STAMP
DIVISION OF THE STATE ARCHITECT
APP. NO. 106828
INC. 1
DATE 11-05-04

agency

SCIENCE BUILDING
LOS MEDANOS COLLEGE

Contra Costa Community College District

owner

MWE project number : 03158
file name: 03158-NS
drawn by: LF checked by: SH
date: NOVEMBER 15, 2004

Rev:	date:	description:

drawing title: ENLARGED PLANS SECOND FLOOR-PART "A"

building no.: LMC SCIENCE 313-023-112.01-0-00.00

drawing no: LE2-1a

drawing of

SEE NEW LE2-1a (BUILDING)

Nov. 05, 2004 - 11:02am, Z:\Proj03\03158\Dwg\03158-PP21A.dwg

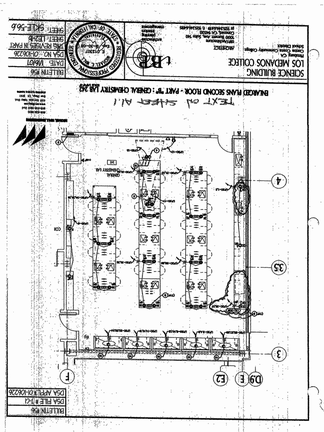

BULLETIN #56
DSA FILE # 7-C1
DSA APPL.# 01-106226

D.9
E
E2
F
3
3.5
4
GENERAL CHEMISTRY LAB
242

TEXT ON SHEET A1.1

ENLARGED PLANS SECOND FLOOR - PART "B" : GENERAL CHEMISTRY LAB 242

4115 Sorrento Valley Blvd.
San Diego, CA 92121

SCIENCE BUILDING
LOS MEDANOS COLLEGE
Pittsburg CA
Contra Costa Community College
School District

ARCHITECT
tBP/Architecture
1000 Burnett Ave, Suite 140
Concord, CA 94520
p: 925.246.6419 f: 925.246.6495

architecture
planning
interiors
management

MICHAEL E. WALL
E 012307
Exp. 9-30-08

BULLETIN #56
DATE: 1/16/01
DSA NO.: 01-106226
THIS REVISES IN PART
SHEET: LE2-1b
SHEET: SKLE-56.6

BULLETIN #56
DSA FILE # 7-C1
DSA APPL.# 01-106226

F3
H
5
OFFICE
SHAFT

TEXT ON SHEET A1.1

ENLARGED PLAN SECOND FLOOR - PART "B" : ORGANIC CHEMISTRY LAB INSTRUMENT ROOM 233

4115 Sorrento Valley Blvd.
San Diego, CA 92121

SCIENCE BUILDING
LOS MEDANOS COLLEGE
Pittsburg CA
Contra Costa Community College
School District

ARCHITECT
tBP/Architecture
1000 Burnett Ave, Suite 140
Concord, CA 94520
p: 925.246.6419 f: 925.246.6495

architecture
planning
interiors
management

MICHAEL E. WALL
E 012307
Exp. 9-30-08

BULLETIN #56
DATE: 1/16/01
DSA NO.: 01-106226
THIS REVISES IN PART
SHEET: LE2-1b
SHEET: SKLE-56.5

Los Medanos College
4CD Proj.# : L-565-B-23-SC
Science Building

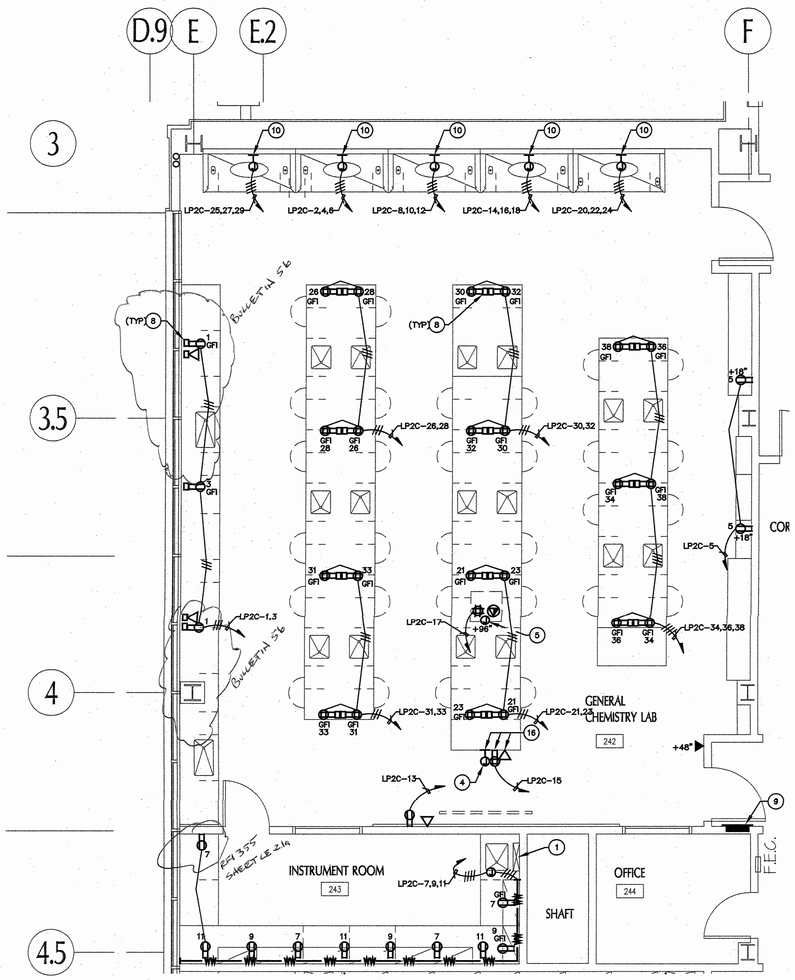

GENERAL CHEMISTRY LABORATORY AND INSTRUMENT ROOM 1
SCALE: 1/4"=1'-0"

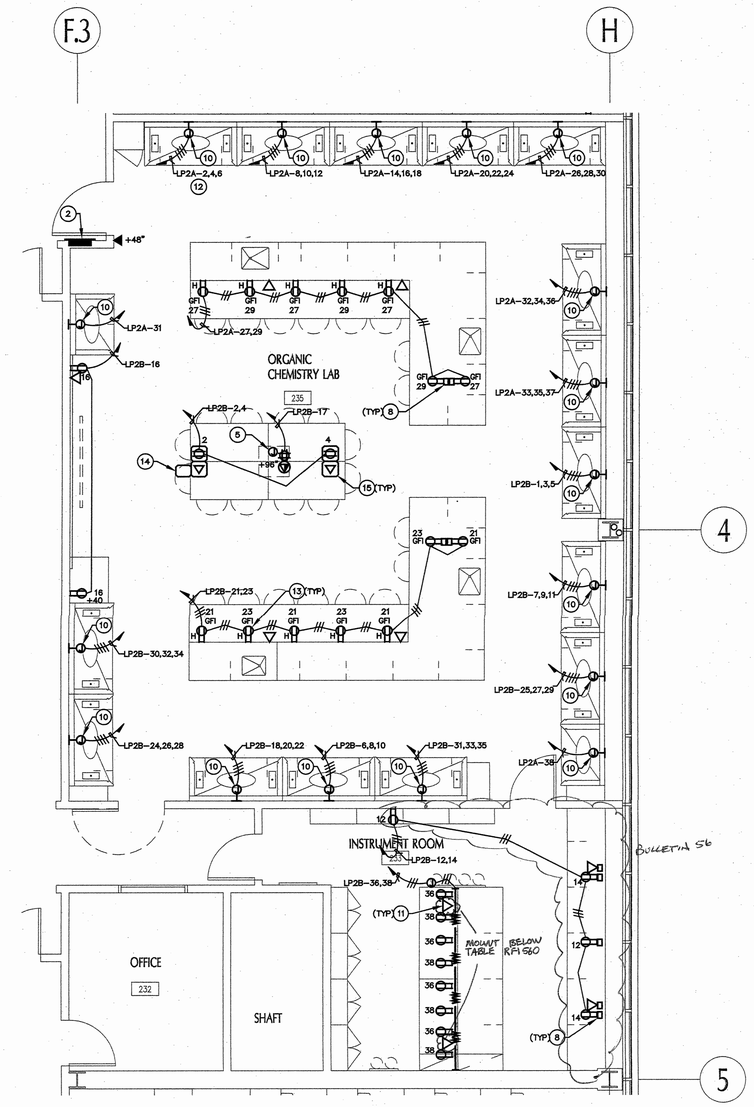

ORGANIC CHEMISTRY LABORATORY AND INSTRUMENT ROOM 2
SCALE: 1/4"=1'-0"

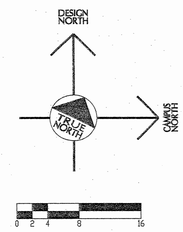

KEY PLAN

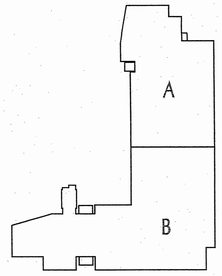

KEY NOTES:

1. PIPE DROP, UTILIZE FOR CONCEALMENT OF CONDUIT.
2. LABORATORY PANEL 'LP2B'.
3. NOT USED.
4. FACULTY INPUT POINT. PROVIDE JUNCTION BOX AND (2)1½"CONDUIT FROM FACULTY INPUT POINT TO WALL AND TO 8" ABOVE CEILING.
5. JUNCTION BOX AND POWER FOR CEILING MOUNTED PROJECTOR. SEE ELECTRICAL DRAWING (SHEET RE-2.2).
6. NOT USED.
7. NOT USED.
8. ELECTRICAL PEDESTAL. SEE DETAIL 6/LE4-1.
9. LABORATORY PANEL 'LP2C'.
10. PROVIDE J-BOX AND CONNECTION AT TOP OF CHEMICAL FUME HOOD AT +96". VERIFY MOUNTING HEIGHT WITH ARCHITECTURAL AND LF DRAWINGS BEFORE ROUGH-IN.
11. RECESS MOUNT TELE/DATA OUTLET ABOVE WIREWAY AT +48" TO CENTER.
12. SEE SHEET LE2-1a FOR PANEL 'LP2A' LOCATION.
13. MOUNT DEVICES HORIZONTALLY AT +32" TO CENTER. COORDINATE WITH MILLWORK AND LF DRAWINGS.
14. FLOOR BOX FOR AV USE ONLY. SEE ELECTRICAL DRAWING (SHEET RE-2.2) [(1)DUPLEX RECEPTACLE, (2)DATA, (2) 1-1/4" CONDUIT TO WALL TO ACCESSIBLE CEILING SPACE, +6".]
15. RECESSED FLOOR BOX WITH COVER-WIREMOLD RFB4.
16. MOUNT DEVICES STACKED VERTICALLY ALONG CHASE. CENTER HORIZONTALLY.

GENERAL NOTES:

1. AT WINDOW WALLS DESKTOP PEDESTALS TO BE WIREMOLD TABLE SOURCE WORK SURFACE MODULES. SEE DETAIL 6/LE4-1.
2. AT ISLAND BENCH LOCATIONS DESKTOP PEDESTAL TO BE HUBBELL 6685/6687 SERIES TYPE. SEE DETAIL 6/LE4-1.
3. AT ISLAND BENCHES WITHOUT PIPE DROP STUB ELECTRICAL AND TELE/DATA UP FROM BELOW INTO PIPE CHASE IN MILLWORK. SEE LF DRAWINGS FOR LOCATION AND DIMENSION OF CHASE.
4. ALL OUTLETS WITHIN 6' OF SINK TO BE GFI.

tBP
architecture
planning
interiors
management

tBP/Architecture
1000 Burnett Avenue, Suite 140
Concord, CA 94520
p: 925.246.6419 f: 925.246.6495

architect

MICHAEL WALL ENGINEERING
858-638-0600
858-638-0640 (fax)
www.mwalleng.com
4116 Sorrento Valley Blvd.
San Diego, CA 92121
REGISTERED ELECTRICAL ENGINEERS

REGISTERED PROFESSIONAL ENGINEER
MICHAEL E. WALL
E 012307
Exp. 9-30-06
ELECTRICAL
STATE OF CALIFORNIA

consultant

agency

SCIENCE BUILDING
LOS MEDANOS COLLEGE

Contra Costa Community College District

owner

MWE project number : 03158

file name: 03158-NS

drawn by: LF checked by: SH

date: NOVEMBER 15, 2004

Rev:	date:	description:
	5/31/06	BULLETIN #10D

drawing title: ENLARGED PLANS SECOND FLOOR-PART "B"

building no.: LMC SCIENCE 313-023-112.01-0-00.00

drawing no.: LE2-1b

drawing of

Aug 01, 2006 - 1:30pm, Z:\Proj03\03158\Dwg\03158-PP21B.dwg

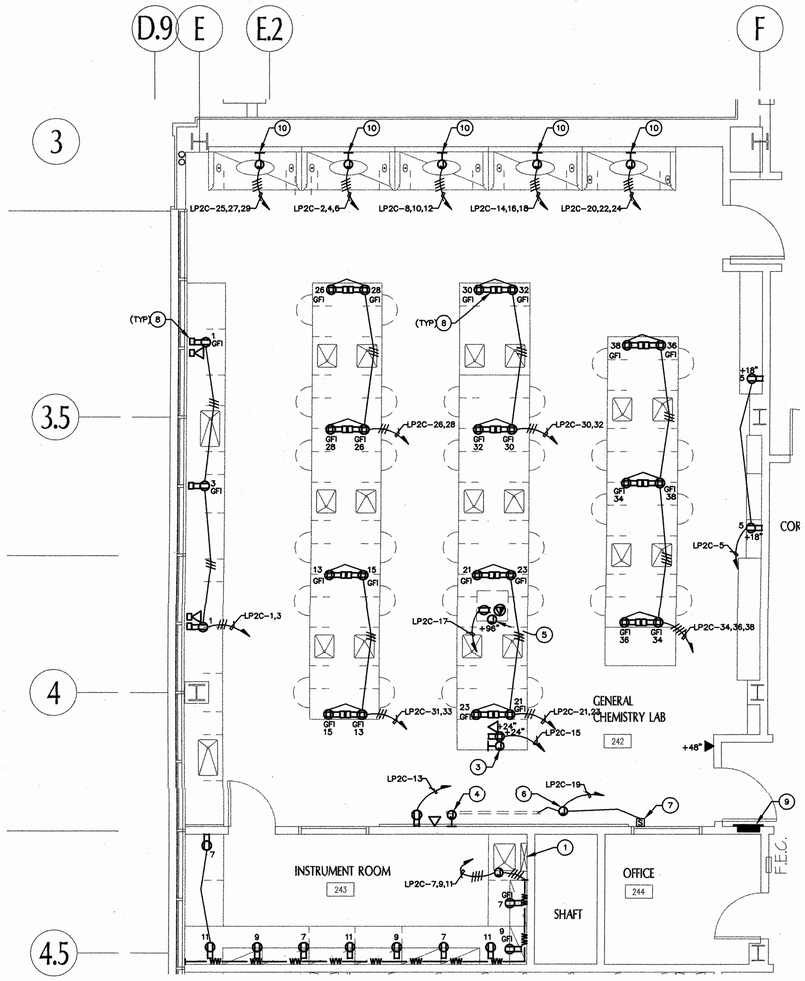

GENERAL CHEMISTRY LABORATORY AND INSTRUMENT ROOM 1

SCALE: 1/4"=1'-0"

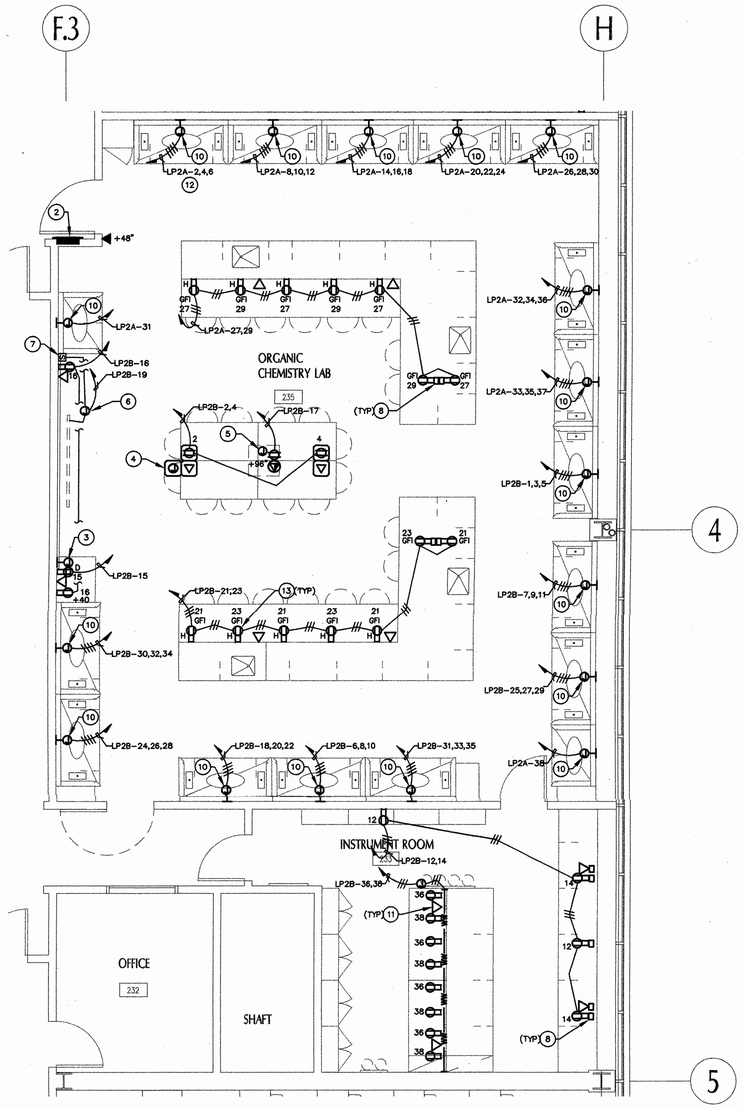

ORGANIC CHEMISTRY LABORATORY AND INSTRUMENT ROOM 2

SCALE: 1/4"=1'-0"

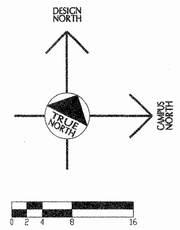

KEY PLAN

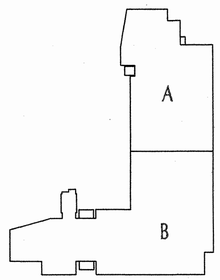

KEY NOTES:

1. PIPE DROP, UTILIZE FOR CONCEALMENT OF CONDUIT.
2. LABORATORY PANEL 'LP2B'.
3. PROVIDE JUNCTION BOX FOR AV CABINET. PROVIDE (1)1"C.O. TO FACULTY INPUT POINT. SEE NOTE 4. PROVIDE (1)1"CONDUIT STUB TO ACCESSIBLE CEILING FOR PROJECTOR. SEE NOTE 5. PROVIDE (1)¾"C.O. STUB TO ACCESSIBLE CEILING.
4. FACULTY INPUT POINT. PROVIDE JUNCTION BOX AND (1)1"CONDUIT TO AV CABINET. SEE NOTE 3.
5. JUNCTION BOX AND POWER FOR CEILING MOUNTED PROJECTOR.
6. JUNCTION BOX FOR MOTORIZED PROJECTION SCREEN. PROVIDE CONNECTION AS PER MANUFACTURER'S RECOMMENDATIONS.
7. PROVIDE UP/DOWN SCREEN SWITCH. CONNECT AS PER MANUFACTURER'S RECOMMENDATIONS.
8. ELECTRICAL PEDESTAL. SEE DETAIL 6/LE4-1.

KEY NOTES:

9. LABORATORY PANEL 'LP2C'.
10. PROVIDE J-BOX AND CONNECTION AT TOP OF CHEMICAL FUME HOOD AT +96". VERIFY MOUNTING HEIGHT WITH ARCHITECTURAL AND LF DRAWINGS BEFORE ROUGH-IN.
11. RECESS MOUNT TELE/DATA OUTLET ABOVE WIREWAY AT +48" TO CENTER.
12. SEE SHEET LE2-1a FOR PANEL 'LP2A' LOCATION.
13. MOUNT DEVICES HORIZONTALLY AT +32" TO CENTER. COORDINATE WITH MILLWORK AND LF DRAWINGS.

GENERAL NOTES:

1. AT WINDOW WALLS DESKTOP PEDESTALS TO BE WIREMOLD TABLE SOURCE WORK SURFACE MODULES. SEE DETAIL 6/LE4-1.
2. AT ISLAND BENCH LOCATIONS DESKTOP PEDESTAL TO BE HUBBELL 6685/6687 SERIES TYPE. SEE DETAIL 6/LE4-1.
3. AT ISLAND BENCHES WITHOUT PIPE DROP STUB ELECTRICAL AND TELE/DATA UP FROM BELOW INTO PIPE CHASE IN MILLWORK. SEE LF DRAWINGS FOR LOCATION AND DIMENSION OF CHASE.
4. ALL OUTLETS WITHIN 6' OF SINK TO BE GFI.

architecture planning interiors management

tBP/Architecture
1000 Burnett Avenue, Suite 140
Concord, CA 94520
p: 925.246.6419 f: 925.246.6495

architect

MICHAEL WALL ENGINEERING
619-231-0600
619-231-0640 (fax)
www.mwaleng.com
1341 India Street
San Diego, CA 92101
REGISTERED ELECTRICAL ENGINEERS

consultant

IDENTIFICATION STAMP
DIVISION OF THE STATE ARCHITECT
APP. NO. 108296
DATE 11-15-04

agency

SCIENCE BUILDING LOS MEDANOS COLLEGE

Contra Costa Community College District

owner

MWE project number : 03158

file name: 03158-NS

drawn by: LF checked by: SH

date: NOVEMBER 15, 2004

Rev:	date:	description:

drawing title: ENLARGED PLANS SECOND FLOOR-PART "B"

building no.: LMC SCIENCE 313-023-112.01-0-00.00

drawing no: LE2-1b

drawing of

Nov 05, 2004 - 11:02am, Z:\Proj03\03158\Dwg\03158-FP21B.dwg

BULLETIN #56
DSA FILE # 7-C1
DSA APPL # 01-106226

MOUNTING: RECESSED — PANEL LP2D — VOLTAGE: 208Y/120V 3PH 4W
FED FROM: — BUS: 225A
NEMA: 1 — MAIN: 150A 3P
AIC RATING: 10KAIC — STATUS: NEW — FEEDER: 150A

Description	A	B	C	L	R	M	P	A				A	P	M	R	L	A	B	C	Description
P.S. PREP / STOCK	1000						1	20	1	A - -	2	20	1				720			STR. & ENG. LAB
P.S. PREP / STOCK		540					1	20	3	- B -	4	20	1					540		STR. & ENG. LAB
P.S. PREP / STOCK			360				1	20	5	- - C	6	20	2						1800	UNIV. TEST. MACH.
P.S. PREP / STOCK	360						1	20	7	A - -	8	-	-				1800			-----
P.S. PREP / STOCK		180					1	20	9	- B -	10	20	2					1800		EQ.
STR. & ENG. LAB			540				1	20	11	- - C	12	-	-						1800	-----
STR. & ENG. LAB	360						1	20	13	A - -	14	30	3				1200			BLOWER
STR. & ENG. LAB		720					1	20	15	- B -	16	-	-					1200		-----
STR. & ENG. LAB			1000				1	20	17	- - C	18	-	-						1200	-----
STR. & ENG. LAB	500						1	20	19	A - -	20	20	1							SPARE
STR. & ENG. LAB		540					1	20	21	- B -	22	20	1							SPARE
STR. & ENG. LAB			540				1	20	23	- - C	24	20	1							SPARE
STR. & ENG. LAB	720						1	20	25	A - -	26	20	1							SPARE
STR. & ENG. LAB		720					1	20	27	- B -	28	20	1							SPARE
STR. & ENG. LAB			720				1	20	29	- - C	30	20	1							SPARE
STR. & ENG. LAB	720						1	20	31	A - -	32	20	1							SPARE
STR. & ENG. LAB		720					1	20	33	- B -	34	20	1							SPARE
STR. & ENG. LAB			720				1	20	35	- - C	36	20	1							SPARE
SPARE							1	20	37	A - -	38	20	1							SPARE
SPARE							1	20	39	- B -	40	20	1							SPARE
SPARE							1	20	41	- - C	42	20	1							SPARE
	3660	3420	3880														3720	3540	4800	

NOTES:

PHASE SUBTOTALS:
A - 7380 VA — SUBTOTAL= 23020 VA
B - 6960 VA — X 0.25LCL= 5755 VA
C - 8680 VA — TOTAL= 28775 VA
80 AMPS

TEXT ON SHEET A1.1

SCIENCE BUILDING
LOS MEDANOS COLLEGE
Pittsburg CA
Contra Costa Community College School District
ARCHITECT
tBP/Architecture
1000 Burnett Ave, Suite 140
Concord, CA 94520
p: 925.246.6419 f: 925.246.6495
tBP architecture planning interiors management
REGISTERED PROFESSIONAL ENGINEER MICHAEL E. WALL E 012307 Exp. 9-30-08 ELECTRICAL STATE OF CALIFORNIA
BULLETIN #56
DATE: 1/16/01
DSA NO. 01-106226
THIS REVISES IN PART SHEET: LE3-1
SHEET: SKLE-56.14

BULLETIN #56
DSA FILE # 7-C1
DSA APPL # 01-106226

MOUNTING: RECESSED — PANEL LP1D — VOLTAGE: 208Y/120V 3PH 4W
FED FROM: — BUS: 225A
NEMA: 1 — MAIN: 150A 3P
AIC RATING: 10KAIC — STATUS: NEW — FEEDER: 150A

Description	A	B	C	L	R	M	P	A				A	P	M	R	L	A	B	C	Description
G. BIOLOGY LAB	360						1	20	1	A - -	2	20	1				720			G. BIOLOGY LAB
G. BIOLOGY LAB		360					1	20	3	- B -	4	20	1					720		G. BIOLOGY LAB
G. BIOLOGY LAB			360				1	20	5	- - C	6	20	1						720	G. BIOLOGY LAB
G. BIOLOGY LAB	720						1	20	7	A - -	8	20	1				720			G. BIOLOGY LAB
G. BIOLOGY LAB		720					1	20	9	- B -	10	20	1					720		G. BIOLOGY LAB
G. BIOLOGY LAB			360				1	20	11	- - C	12	20	1						720	G. BIOLOGY LAB
G. BIOLOGY LAB	360						1	20	13	A - -	14	20	1				1000			AFCH
G. BIOLOGY LAB		1000					1	20	15	- B -	16	20	1					1000		AFCH
G. BIOLOGY LAB			1000				1	20	17	- - C	18	20	1						1000	AFCH
G. BIOLOGY LAB	500						1	20	19	A - -	20	30	2				1800			OVEN/COOKTOP
G. BIOLOGY LAB		540					1	20	21	- B -	22	-	-					1800		-----
G. BIOLOGY LAB			540				1	20	23	- - C	24	20	1						1000	FLAT SCREEN
SPARE							1	20	25	A - -	26	20	1				540			PLANT STUDY
SPARE							1	20	27	- B -	28	20	1					540		PLANT STUDY
SPARE							1	20	29	- - C	30	20	1						1000	GARBAGE DISP.
SPARE							1	20	31	A - -	32	20	1							SPARE
SPARE							1	20	33	- B -	34	20	1							SPARE
SPARE							1	20	35	- - C	36	20	1							SPARE
SPARE							1	20	37	A - -	38	20	1							SPARE
SPARE							1	20	39	- B -	40	20	1							SPARE
SPARE							1	20	41	- - C	42	20	1							SPARE
	1940	2620	2260														4780	4780	4440	

NOTES:

PHASE SUBTOTALS:
A - 6720 VA — SUBTOTAL= 20820 VA
B - 7400 VA — X 0.25LCL= 5205 VA
C - 6700 VA — TOTAL= 26025 VA
72 AMPS

TEXT ON SHEET A1.1

SCIENCE BUILDING
LOS MEDANOS COLLEGE
Pittsburg CA
Contra Costa Community College School District
ARCHITECT
tBP/Architecture
1000 Burnett Ave, Suite 140
Concord, CA 94520
p: 925.246.6419 f: 925.246.6495
tBP architecture planning interiors management
REGISTERED PROFESSIONAL ENGINEER MICHAEL E. WALL E 012307 Exp. 9-30-08 ELECTRICAL STATE OF CALIFORNIA
BULLETIN #56
DATE: 1/16/01
DSA NO. 01-106226
THIS REVISES IN PART SHEET: LE3-1
SHEET: SKLE-56.10

BULLETIN #56
DSA FILE # 7-C1
DSA APPL # 01-106226

MOUNTING: RECESSED — PANEL LP2A — VOLTAGE: 208Y/120V 3PH 4W
FED FROM: — BUS: 225A
NEMA: 1 — MAIN: 150A 3P
AIC RATING: 10KAIC — STATUS: NEW — FEEDER: 150A

Description	A	B	C	L	R	M	P	A				A	P	M	R	L	A	B	C	Description
PREP / STOCK RM.	1000						1	20	1	A - -	2	20	1				1000			CFH
PREP / STOCK RM.		360					1	20	3	- B -	4	20	1					1000		CFH
CFH			1000				1	20	5	- - C	6	20	1						1000	CFH
CFH	1000						1	20	7	A - -	8	20	1				1000			CFH
CFH		1000					1	20	9	- B -	10	20	1					1000		CFH
PREP / STOCK RM.			540				1	20	11	- - C	12	20	1						1000	CFH
PREP / STOCK RM.	360						1	20	13	A - -	14	20	1				1000			CFH
CFH		1000					1	20	15	- B -	16	20	1					1000		CFH
CFH			1000				1	20	17	- - C	18	20	1						1000	CFH
CFH	1000						1	20	19	A - -	20	20	1				1000			CFH
PREP / STOCK RM.		540					1	20	21	- B -	22	20	1					1000		CFH
PREP / STOCK RM.			180				1	20	23	- - C	24	20	1						1000	CFH
PREP / STOCK RM.	180						1	20	25	A - -	26	20	1				1000			CFH
O. CHEMISTRY LAB		720					1	20	27	- B -	28	20	1					1000		CFH
O. CHEMISTRY LAB			540				1	20	29	- - C	30	20	1						1000	CFH
CFH	1000						1	20	31	A - -	32	20	1				1000			CFH
CFH		1000					1	20	33	- B -	34	20	1					1000		CFH
CFH			1000				1	20	35	- - C	36	20	1						1000	CFH
CFH	1000						1	20	37	A - -	38	20	1				1000			CFH
PREP / STOCK RM.		1000					1	20	39	- B -	40	20	1					1000		GLASS WASHER
ROLL-UP DOOR			996				1	20	41	- - C	42	20	1						1000	REFRIG.
	5540	5620	5256														7000	7000	7000	

NOTES:

PHASE SUBTOTALS:
A - 12540 VA — SUBTOTAL= 37416 VA
B - 12620 VA — X 0.25LCL= 9354 VA
C - 12256 VA — TOTAL= 46770 VA
130 AMPS

TEXT ON SHEET A1.1

SCIENCE BUILDING
LOS MEDANOS COLLEGE
Pittsburg CA
Contra Costa Community College School District
ARCHITECT
tBP/Architecture
1000 Burnett Ave, Suite 140
Concord, CA 94520
p: 925.246.6419 f: 925.246.6495
tBP architecture planning interiors management
REGISTERED PROFESSIONAL ENGINEER MICHAEL E. WALL E 012307 Exp. 9-30-08 ELECTRICAL STATE OF CALIFORNIA
BULLETIN #56
DATE: 1/16/01
DSA NO. 01-106226
THIS REVISES IN PART SHEET: LE3-1
SHEET: SKLE-56.11

BULLETIN #56
DSA FILE # 7-C1
DSA APPL # 01-106226

MOUNTING: RECESSED — PANEL LP1B — VOLTAGE: 208Y/120V 3PH 4W
FED FROM: — BUS: 400A
NEMA: 1 — MAIN: 400A 3P
AIC RATING: 10KAIC — STATUS: NEW — FEEDER: 400A

Description	A	B	C	L	R	M	P	A				A	P	M	R	L	A	B	C	Description
MIC. PHYSIO. LAB	540						1	20	1	A - -	2	20	1				720			MIC. PHYSIO. LAB
MIC. PHYSIO. LAB		540					1	20	3	- B -	4	20	1					540		MIC. PHYSIO. LAB
SPARE							1	20	5	- - C	6	20	1							SPARE
MIC. PREP / STOCK	720						1	20	7	A - -	8	20	1							SPARE
MIC. PREP / STOCK		540					1	20	9	- B -	10	20	1					540		MIC. PHYSIO. LAB
MIC. PREP / STOCK			1000				1	20	11	- - C	12	20	1						540	MIC. PHYSIO. LAB
AUTOCL. CNTRL.	1140						1	20	13	A - -	14	20	1				180			MIC. PHYSIO. LAB
AUTOCL. CNTRL.		1140					1	20	15	- B -	16	20	1					360		MIC. PHYSIO. LAB
SPARE							1	20	17	- - C	18	20	1						1500	MIC. PREP / STOCK
MIC. PHYSIO. LAB	1500						1	20	19	A - -	20	20	1				1500			MIC. PREP / STOCK
MIC. PHYSIO. LAB		540					1	20	21	- B -	22	20	1					720		MIC. PREP / STOCK
MIC. PHYSIO. LAB			540				1	20	23	- - C	24	20	1						720	MIC. PREP / STOCK
MIC. PHYSIO. LAB	900						1	20	25	A - -	26	20	1				720			MIC. PREP / STOCK
MIC. PHYSIO. LAB		900					1	20	27	- B -	28	20	1					1000		CLEAN PREP.
BSC			1000				1	20	29	- - C	30	20	1						1000	CLEAN PREP.
MIC. PHYSIO. LAB	900						1	20	31	A - -	32	125	3				9900			AUTOCLAVE
MIC. PHYSIO. LAB		900					1	20	33	- B -	34	-	-					9900		-----
MIC. PHYSIO. LAB			1000				1	20	35	- - C	36	-	-						9900	-----
AFCH	1000						1	20	37	A - -	38	125	3				9900			AUTOCLAVE
AFCH		1000					1	20	39	- B -	40	-	-					9900		-----
AFCH			1000				1	20	41	- - C	42	-	-						9900	-----
	6700	5560	4540														22920	22960	23560	

NOTES:

PHASE SUBTOTALS:
A - 29620 VA — SUBTOTAL= 86240 VA
B - 28520 VA — X 0.25LCL= 21560 VA
C - 28100 VA — TOTAL= 107800 VA
299 AMPS

TEXT ON SHEET A1.1

SCIENCE BUILDING
LOS MEDANOS COLLEGE
Pittsburg CA
Contra Costa Community College School District
ARCHITECT
tBP/Architecture
1000 Burnett Ave, Suite 140
Concord, CA 94520
p: 925.246.6419 f: 925.246.6495
tBP architecture planning interiors management
REGISTERED PROFESSIONAL ENGINEER MICHAEL E. WALL E 012307 Exp. 9-30-08 ELECTRICAL STATE OF CALIFORNIA
BULLETIN #56
DATE: 1/16/01
DSA NO. 01-106226
THIS REVISES IN PART SHEET: LE3-1
SHEET: SKLE-56.8

BULLETIN #56
DSA FILE # 7-C1
DSA APPL # 01-106226

MOUNTING: RECESSED — PANEL LP2B — VOLTAGE: 208Y/120V 3PH 4W
FED FROM: — BUS: 225A
NEMA: 1 — MAIN: 150A 3P
AIC RATING: 10KAIC — STATUS: NEW — FEEDER: 150A

Description	A	B	C	L	R	M	P	A				A	P	M	R	L	A	B	C	Description
CFH	1000						1	20	1	A - -	2	20	1				720			O. CHEMISTRY LAB
CFH		1000					1	20	3	- B -	4	20	1					720		O. CHEMISTRY LAB
CFH			1000				1	20	5	- - C	6	20	1						1000	CFH
CFH	1000						1	20	7	A - -	8	20	1				1000			CFH
CFH		1000					1	20	9	- B -	10	20	1					1000		CFH
CFH			1000				1	20	11	- - C	12	20	1							SPARE
SPARE							1	20	13	A - -	14	20	1							SPARE
O. CHEMISTRY LAB		1000					1	20	15	- B -	16	20	1					360		O. CHEMISTRY LAB
O. CHEMISTRY LAB			1000				1	20	17	- - C	18	20	1						1000	CFH
O. CHEMISTRY LAB	500						1	20	19	A - -	20	20	1				1000			CFH
O. CHEMISTRY LAB		720					1	20	21	- B -	22	20	1					1000		CFH
O. CHEMISTRY LAB			540				1	20	23	- - C	24	20	1						1000	CFH
CFH	1000						1	20	25	A - -	26	20	1				1000			CFH
CFH		1000					1	20	27	- B -	28	20	1					1000		CFH
CFH			1000				1	20	29	- - C	30	20	1						1000	CFH
CFH	1000						1	20	31	A - -	32	20	1				1000			CFH
CFH		1000					1	20	33	- B -	34	20	1					1000		CFH
CFH			1000				1	20	35	- - C	36	20	1						720	INSTRUMENT RM.
INSTRUMENT RM.	720						1	20	37	A - -	38	20	1				720			INSTRUMENT RM.
INSTRUMENT RM.		540					1	20	39	- B -	40	20	1							SPARE
INSTRUMENT RM.			540				1	20	41	- - C	42	20	1							SPARE
	5220	5260	6080														5440	5080	4720	

NOTES:

PHASE SUBTOTALS:
A - 10660 VA — SUBTOTAL= 32800 VA
B - 11340 VA — X 0.25LCL= 8200 VA
C - 10800 VA — TOTAL= 41000 VA
114 AMPS

TEXT ON SHEET A1.1

SCIENCE BUILDING
LOS MEDANOS COLLEGE
Pittsburg CA
Contra Costa Community College School District
ARCHITECT
tBP/Architecture
1000 Burnett Ave, Suite 140
Concord, CA 94520
p: 925.246.6419 f: 925.246.6495
tBP architecture planning interiors management
REGISTERED PROFESSIONAL ENGINEER MICHAEL E. WALL E 012307 Exp. 9-30-08 ELECTRICAL STATE OF CALIFORNIA
BULLETIN #56
DATE: 1/16/01
DSA NO. 01-106226
THIS REVISES IN PART SHEET: LE3-1
SHEET: SKLE-56.12

BULLETIN #56
DSA FILE # 7-C1
DSA APPL # 01-106226

MOUNTING: RECESSED — PANEL LP1C — VOLTAGE: 208Y/120V 3PH 4W
FED FROM: — BUS: 225A
NEMA: 1 — MAIN: 150A 3P
AIC RATING: 10KAIC — STATUS: NEW — FEEDER: 150A

Description	A	B	C	L	R	M	P	A				A	P	M	R	L	A	B	C	Description
ACFH	1000						1	20	1	A - -	2	20	1				900			M. BIOLOGY LAB
ACFH		1000					1	20	3	- B -	4	20	1					900		M. BIOLOGY LAB
ACFH			1000				1	20	5	- - C	6	20	1						1000	M. BIOLOGY LAB
M. BIOLOGY LAB	540						1	20	7	A - -	8	20	1				900			M. BIOLOGY LAB
M. BIOLOGY LAB		720					1	20	9	- B -	10	20	1					900		M. BIOLOGY LAB
M. BIOLOGY LAB			540				1	20	11	- - C	12	20	1						1000	U.C. GLASS WASH.
M. BIOLOGY LAB	540						1	20	13	A - -	14	20	1				180			M. BIOLOGY LAB
M. BIOLOGY LAB		1000					1	20	15	- B -	16	20	1					360		M. BIOLOGY LAB
M. BIOLOGY LAB			540				1	20	17	- - C	18	20	1						1000	CFH
M. BIOLOGY LAB	1500						1	20	19	A - -	20	20	1				1000			CFH
M. BIOLOGY LAB		540					1	20	21	- B -	22	20	1					1000		CFH
M. BIOLOGY LAB			360				1	20	23	- - C	24	20	1						1000	PREP / STOCK RM.
M. BIOLOGY LAB	900						1	20	25	A - -	26	20	1				1000			PREP / STOCK RM.
M. BIOLOGY LAB		900					1	20	27	- B -	28	20	1					540		PREP / STOCK RM.
REFRIG.			1000				1	20	29	- - C	30	20	1						1000	PREP / STOCK RM.
M. BIOLOGY LAB	900						1	20	31	A - -	32	20	1				1000			PREP / STOCK RM.
M. BIOLOGY LAB		900					1	20	33	- B -	34	20	1					1000		PREP / STOCK RM.
REFRIG.			1000				1	20	35	- - C	36	20	1						1000	PREP / STOCK RM.
GARBAGE DISP.	1000						1	20	37	A - -	38	20	1							SPARE
GARBAGE DISP.		1000					1	20	39	- B -	40	20	1							SPARE
GARBAGE DISP.			1000				1	20	41	- - C	42	20	1							SPARE
	6380	6060	5440														4980	4700	6000	

NOTES:

PHASE SUBTOTALS:
A - 11360 VA — SUBTOTAL= 33560 VA
B - 10760 VA — X 0.25LCL= 8390 VA
C - 11440 VA — TOTAL= 41950 VA
117 AMPS

TEXT ON SHEET A1.1

SCIENCE BUILDING
LOS MEDANOS COLLEGE
Pittsburg CA
Contra Costa Community College School District
ARCHITECT
tBP/Architecture
1000 Burnett Ave, Suite 140
Concord, CA 94520
p: 925.246.6419 f: 925.246.6495
tBP architecture planning interiors management
REGISTERED PROFESSIONAL ENGINEER MICHAEL E. WALL E 012307 Exp. 9-30-08 ELECTRICAL STATE OF CALIFORNIA
BULLETIN #56
DATE: 1/16/01
DSA NO. 01-106226
THIS REVISES IN PART SHEET: LE3-1
SHEET: SKLE-56.9

BULLETIN #56
DSA FILE # 7-C1
DSA APPL # 01-106226

MOUNTING: RECESSED — PANEL LP2C — VOLTAGE: 208Y/120V 3PH 4W
FED FROM: — BUS: 225A
NEMA: 1 — MAIN: 150A 3P
AIC RATING: 10KAIC — STATUS: NEW — FEEDER: 150A

Description	A	B	C	L	R	M	P	A				A	P	M	R	L	A	B	C	Description
G. CHEMISTRY LAB	360						1	20	1	A - -	2	20	1				1000			CFH
G. CHEMISTRY LAB		180					1	20	3	- B -	4	20	1					1000		CFH
G. CHEMISTRY LAB			360				1	20	5	- - C	6	20	1						1000	CFH
INSTRUMENT RM.	720						1	20	7	A - -	8	20	1				1000			CFH
INSTRUMENT RM.		540					1	20	9	- B -	10	20	1					1000		CFH
INSTRUMENT RM.			540				1	20	11	- - C	12	20	1						1000	CFH
G. CHEMISTRY LAB	180						1	20	13	A - -	14	20	1				1000			CFH
G. CHEMISTRY LAB		360					1	20	15	- B -	16	20	1					1000		CFH
G. CHEMISTRY LAB			1000				1	20	17	- - C	18	20	1						1000	CFH
G. CHEMISTRY LAB	500						1	20	19	A - -	20	20	1				1000			CFH
G. CHEMISTRY LAB		720					1	20	21	- B -	22	20	1					1000		CFH
G. CHEMISTRY LAB			720				1	20	23	- - C	24	20	1						1000	CFH
CFH	1000						1	20	25	A - -	26	20	1				720			G. CHEMISTRY LAB
CFH		1000					1	20	27	- B -	28	20	1					720		G. CHEMISTRY LAB
CFH			1000				1	20	29	- - C	30	20	1						720	G. CHEMISTRY LAB
G. CHEMISTRY LAB	720						1	20	31	A - -	32	20	1				720			G. CHEMISTRY LAB
G. CHEMISTRY LAB		720					1	20	33	- B -	34	20	1					720		G. CHEMISTRY LAB
MUFFLE FURN.			1800				2	30	35	- - C	36	20	1						720	G. CHEMISTRY LAB
-----	1800						-	-	37	A - -	38	20	1				720			G. CHEMISTRY LAB
SPARE							1	20	39	- B -	40	20	1							SPARE
SPARE							1	20	41	- - C	42	20	1							SPARE
	5280	3520	5420														6160	5440	5440	

NOTES:

PHASE SUBTOTALS:
A - 11440 VA — SUBTOTAL= 31260 VA
B - 8960 VA — X 0.25LCL= 7815 VA
C - 10860 VA — TOTAL= 39075 VA
109 AMPS

TEXT ON SHEET A1.1

SCIENCE BUILDING
LOS MEDANOS COLLEGE
Pittsburg CA
Contra Costa Community College School District
ARCHITECT
tBP/Architecture
1000 Burnett Ave, Suite 140
Concord, CA 94520
p: 925.246.6419 f: 925.246.6495
tBP architecture planning interiors management
REGISTERED PROFESSIONAL ENGINEER MICHAEL E. WALL E 012307 Exp. 9-30-08 ELECTRICAL STATE OF CALIFORNIA
BULLETIN #56
DATE: 1/16/01
DSA NO. 01-106226
THIS REVISES IN PART SHEET: LE3-1
SHEET: SKLE-56.13

Nov 05, 2004 - 11:04am, Z:\Proj03\03158\Dwg\03158-PS1.dwg

MOUNTING: RECESSED — PANEL **LP2D** — VOLTAGE: 208Y/120V 3PH 4W
FED FROM: — BUS: 225A
NEMA: 1 — MAIN: 150A 3P
AIC RATING: 10KAIC — STATUS: NEW — FEEDER: 150A

Description	A	B	C	L	R	M	P	A				A	P	M	R	L	A	B	C	Description
P.S. PREP / STOCK	1000						1	20	1	A - -	2	20	1				720			STR. & ENG. LAB
P.S. PREP / STOCK		640					1	20	3	- B -	4	20	1					640		STR. & ENG. LAB
P.S. PREP / STOCK			360				1	20	5	- - C	6	20	1							SPARE
P.S. PREP / STOCK	360						1	20	7	A - -	8	20	1							SPARE
P.S. PREP / STOCK		180					1	20	9	- B -	10	20	1							SPARE
STR. & ENG. LAB			640				1	20	11	- - C	12	20	1							SPARE
STR. & ENG. LAB	360						1	20	13	A - -	14	20	1							SPARE
STR. & ENG. LAB		720					1	20	15	- B -	16	20	1							SPARE
STR. & ENG. LAB			1000				1	20	17	- - C	18	20	1							SPARE
STR. & ENG. LAB	600						1	20	19	A - -	20	20	1							SPARE
STR. & ENG. LAB		640					1	20	21	- B -	22	20	1							SPARE
STR. & ENG. LAB			640				1	20	23	- - C	24	20	1							SPARE
STR. & ENG. LAB	720						1	20	25	A - -	26	20	1							SPARE
STR. & ENG. LAB		720					1	20	27	- B -	28	20	1							SPARE
STR. & ENG. LAB			720				1	20	29	- - C	30	20	1							SPARE
STR. & ENG. LAB	720						1	20	31	A - -	32	20	1							SPARE
STR. & ENG. LAB		720					1	20	33	- B -	34	20	1							SPARE
STR. & ENG. LAB			720				1	20	35	- - C	36	20	1							SPARE
SPARE							1	20	37	A - -	38	20	1							SPARE
SPARE							1	20	39	- B -	40	20	1							SPARE
SPARE							1	20	41	- - C	42	20	1							SPARE
	3660	3420	3880														720	640	0	

NOTES:
PHASE SUBTOTALS: A - 4380 VA; B - 3960 VA; C - 3880 VA
SUBTOTAL= 12220 VA; X 0.25LCL= 3055 VA; TOTAL= 15275 VA; 42 AMPS

MOUNTING: RECESSED — PANEL **LP1D** — VOLTAGE: 208Y/120V 3PH 4W
FED FROM: — BUS: 225A
NEMA: 1 — MAIN: 150A 3P
AIC RATING: 10KAIC — STATUS: NEW — FEEDER: 150A

Description	A	B	C	L	R	M	P	A				A	P	M	R	L	A	B	C	Description
G. BIOLOGY LAB	360						1	20	1	A - -	2	20	1				720			G. BIOLOGY LAB
G. BIOLOGY LAB		360					1	20	3	- B -	4	20	1					720		G. BIOLOGY LAB
G. BIOLOGY LAB			360				1	20	5	- - C	6	20	1						720	G. BIOLOGY LAB
G. BIOLOGY LAB	720						1	20	7	A - -	8	20	1				720			G. BIOLOGY LAB
G. BIOLOGY LAB		720					1	20	9	- B -	10	20	1					720		G. BIOLOGY LAB
G. BIOLOGY LAB			360				1	20	11	- - C	12	20	1						720	G. BIOLOGY LAB
G. BIOLOGY LAB	360						1	20	13	A - -	14	20	1				1000			AFCH
G. BIOLOGY LAB		1000					1	20	15	- B -	16	20	1					1000		AFCH
G. BIOLOGY LAB			1000				1	20	17	- - C	18	20	1						1000	AFCH
G. BIOLOGY LAB	600						1	20	19	A - -	20	20	1							SPARE
G. BIOLOGY LAB		640					1	20	21	- B -	22	20	1							SPARE
G. BIOLOGY LAB			640				1	20	23	- - C	24	20	1							SPARE
SPARE							1	20	25	A - -	26	20	1							SPARE
SPARE							1	20	27	- B -	28	20	1							SPARE
SPARE							1	20	29	- - C	30	20	1							SPARE
SPARE							1	20	31	A - -	32	20	1							SPARE
SPARE							1	20	33	- B -	34	20	1							SPARE
SPARE							1	20	35	- - C	36	20	1							SPARE
SPARE							1	20	37	A - -	38	20	1							SPARE
SPARE							1	20	39	- B -	40	20	1							SPARE
SPARE							1	20	41	- - C	42	20	1							SPARE
	1940	2620	2260														2440	2440	2440	

NOTES:
PHASE SUBTOTALS: A - 4380 VA; B - 5060 VA; C - 4700 VA
SUBTOTAL= 14140 VA; X 0.25LCL= 3535 VA; TOTAL= 17675 VA; 49 AMPS

MOUNTING: RECESSED — PANEL **LP1A** — VOLTAGE: 208Y/120V 3PH 4W
FED FROM: — BUS: 225A
NEMA: 1 — MAIN: 150A 3P
AIC RATING: 10KAIC — STATUS: NEW — FEEDER: 150A

Description	A	B	C	L	R	M	P	A				A	P	M	R	L	A	B	C	Description
CADAVER	720						1	20	1	A - -	2	20	1				720			ANATOMY LAB
CADAVER		540					1	20	3	- B -	4	20	1					540		ANATOMY LAB
CADAVER			450	-			1	20	5	- - C	6	20	1						540	ANATOMY LAB
ANATOMY LAB	540						1	20	7	A - -	8	20	1				720			ANATOMY LAB
ANATOMY LAB		360					1	20	9	- B -	10	20	1					540		ANATOMY LAB
ANATOMY LAB			540				1	20	11	- - C	12	20	1						540	ANATOMY LAB
ANATOMY LAB	540						1	20	13	A - -	14	20	1				180			ANATOMY LAB
ANATOMY LAB		1000					1	20	15	- B -	16	20	1					360		ANATOMY LAB
ANATOMY LAB			1000				1	20	17	- - C	18	30	2						2800	COLD ROOM
ANATOMY LAB	600						1	20	19	A - -	20	-	-				2800			-----
ANATOMY LAB		360					1	20	21	- B -	22	-	-					2800		-----
ANATOMY LAB			360				1	20	23	- - C	24	20	1							SPARE
ANATOMY LAB	720						1	20	25	A - -	26	20	1							SPARE
ANATOMY LAB		540					1	20	27	- B -	28	20	1							SPARE
ANATOMY LAB			540				1	20	29	- - C	30	20	1							SPARE
ANATOMY LAB	720						1	20	31	A - -	32	20	1							SPARE
ANATOMY LAB		540					1	20	33	- B -	34	20	1							SPARE
ANATOMY LAB			540				1	20	35	- - C	36	20	1							SPARE
SPARE							1	20	37	A - -	38	20	1							SPARE
SPARE							1	20	39	- B -	40	20	1							SPARE
SPARE							1	20	41	- - C	42	20	1							SPARE
	3740	3340	3430														4420	4240	3880	

NOTES:
PHASE SUBTOTALS: A - 8160 VA; B - 7580 VA; C - 7310 VA
SUBTOTAL= 23050 VA; X 0.25LCL= 5763 VA; TOTAL= 28813 VA; 80 AMPS

MOUNTING: RECESSED — PANEL **LP2E** — VOLTAGE: 208Y/120V 3PH 4W
FED FROM: — BUS: 225A
NEMA: 1 — MAIN: 150A 3P
AIC RATING: 10KAIC — STATUS: NEW — FEEDER: 150A

Description	A	B	C	L	R	M	P	A				A	P	M	R	L	A	B	C	Description
OPTICS ROOM	1000						1	20	1	A - -	2	20	1				1000			PHYSICS LAB
OPTICS ROOM		1000					1	20	3	- B -	4	20	1					1000		PHYSICS LAB
OPTICS ROOM			720				1	20	5	- - C	6	20	1						1000	PHYSICS LAB
OPTICS ROOM	720						1	20	7	A - -	8	20	1				1000			PHYSICS LAB
OPTICS ROOM		360					1	20	9	- B -	10	20	1					1000		PHYSICS LAB
PHYSICS LAB			1000				1	20	11	- - C	12	20	1						720	PHYSICS LAB
PHYSICS LAB	540						1	20	13	A - -	14	20	1				720			PHYSICS LAB
PHYSICS LAB		540					1	20	15	- B -	16	20	1					720		PHYSICS LAB
PHYSICS LAB			1000				1	20	17	- - C	18	20	1						180	PHYSICS LAB
PHYSICS LAB	600						1	20	19	A - -	20	20	1							SPARE
PHYSICS LAB		720					1	20	21	- B -	22	20	1							SPARE
PHYSICS LAB			720				1	20	23	- - C	24	20	1							SPARE
PHYSICS LAB	720						1	20	25	A - -	26	20	1							SPARE
PHYSICS LAB		720					1	20	27	- B -	28	20	1							SPARE
PHYSICS LAB			720				1	20	29	- - C	30	20	1							SPARE
PHYSICS LAB	720						1	20	31	A - -	32	20	1							SPARE
PHYSICS LAB		720					1	20	33	- B -	34	20	1							SPARE
PHYSICS LAB			720				1	20	35	- - C	36	20	1							SPARE
SPARE							1	20	37	A - -	38	20	1							SPARE
SPARE							1	20	39	- B -	40	20	1							SPARE
SPARE							1	20	41	- - C	42	20	1							SPARE
	4200	4060	4880														2720	2720	1900	

NOTES:
PHASE SUBTOTALS: A - 6920 VA; B - 6780 VA; C - 6780 VA
SUBTOTAL= 20480 VA; X 0.25LCL= 5120 VA; TOTAL= 25600 VA; 71 AMPS

MOUNTING: RECESSED — PANEL **LP2A** — VOLTAGE: 208Y/120V 3PH 4W
FED FROM: — BUS: 225A
NEMA: 1 — MAIN: 150A 3P
AIC RATING: 10KAIC — STATUS: NEW — FEEDER: 150A

Description	A	B	C	L	R	M	P	A				A	P	M	R	L	A	B	C	Description
PREP / STOCK RM.	1000						1	20	1	A - -	2	20	1				1000			CFH
PREP / STOCK RM.		360					1	20	3	- B -	4	20	1					1000		CFH
CFH			1000				1	20	5	- - C	6	20	1						1000	CFH
CFH	1000						1	20	7	A - -	8	20	1				1000			CFH
CFH		1000					1	20	9	- B -	10	20	1					1000		CFH
PREP / STOCK RM.			540				1	20	11	- - C	12	20	1						1000	CFH
PREP / STOCK RM.	360						1	20	13	A - -	14	20	1				1000			CFH
CFH		1000					1	20	15	- B -	16	20	1					1000		CFH
CFH			1000				1	20	17	- - C	18	20	1						1000	CFH
CFH	1000						1	20	19	A - -	20	20	1				1000			CFH
PREP / STOCK RM.		540					1	20	21	- B -	22	20	1					1000		CFH
PREP / STOCK RM.			180				1	20	23	- - C	24	20	1						1000	CFH
PREP / STOCK RM.	180						1	20	25	A - -	26	20	1				1000			CFH
O. CHEMISTRY LAB		720					1	20	27	- B -	28	20	1					1000		CFH
O. CHEMISTRY LAB			540				1	20	29	- - C	30	20	1						1000	CFH
CFH	1000						1	20	31	A - -	32	20	1				1000			CFH
CFH		1000					1	20	33	- B -	34	20	1					1000		CFH
CFH			1000				1	20	35	- - C	36	20	1						1000	CFH
CFH	1000						1	20	37	A - -	38	20	1				1000			CFH
PREP / STOCK RM.		1000					1	20	39	- B -	40	20	1							SPARE
SPARE							1	20	41	- - C	42	20	1							SPARE
	5540	5620	4260														7000	6000	6000	

NOTES:
PHASE SUBTOTALS: A - 12540 VA; B - 11620 VA; C - 10260 VA
SUBTOTAL= 34420 VA; X 0.25LCL= 8605 VA; TOTAL= 43025 VA; 120 AMPS

MOUNTING: RECESSED — PANEL **LP1B** — VOLTAGE: 208Y/120V 3PH 4W
FED FROM: — BUS: 400A
NEMA: 1 — MAIN: 400A 3P
AIC RATING: 10KAIC — STATUS: NEW — FEEDER: 400A

Description	A	B	C	L	R	M	P	A				A	P	M	R	L	A	B	C	Description
MIC. PHYSIO. LAB	540						1	20	1	A - -	2	20	1				720			MIC. PHYSIO. LAB
MIC. PHYSIO. LAB		540					1	20	3	- B -	4	20	1					540		MIC. PHYSIO. LAB
SPARE							1	20	5	- - C	6	20	1							SPARE
MIC. PREP / STOCK	720						1	20	7	A - -	8	20	1							SPARE
MIC. PREP / STOCK		540					1	20	9	- B -	10	20	1					540		MIC. PHYSIO. LAB
MIC. PREP / STOCK			1000				1	20	11	- - C	12	20	1						540	MIC. PHYSIO. LAB
AUTOCL. CNTRL.	1140						1	20	13	A - -	14	20	1				180			MIC. PHYSIO. LAB
AUTOCL. CNTRL.		1140					1	20	15	- B -	16	20	1					360		MIC. PHYSIO. LAB
SPARE							1	20	17	- - C	18	20	1						1500	MIC. PREP / STOCK
MIC. PHYSIO. LAB	1500						1	20	19	A - -	20	20	1				1500			MIC. PREP / STOCK
MIC. PHYSIO. LAB		540					1	20	21	- B -	22	20	1					720		MIC. PREP / STOCK
MIC. PHYSIO. LAB			540				1	20	23	- - C	24	20	1						720	MIC. PREP / STOCK
MIC. PHYSIO. LAB	900						1	20	25	A - -	26	20	1				720			MIC. PREP / STOCK
MIC. PHYSIO. LAB		900					1	20	27	- B -	28	20	1					1000		CLEAN PREP
SPARE							1	20	29	- - C	30	20	1						360	CLEAN PREP
MIC. PHYSIO. LAB	900						1	20	31	A - -	32	125	3				9900			AUTOCLAVE
MIC. PHYSIO. LAB		900					1	20	33	- B -	34	-	-					9900		-----
MIC. PHYSIO. LAB			1000				1	20	35	- - C	36	-	-						9900	-----
AFCH	1000						1	20	37	A - -	38	125	3				9900			AUTOCLAVE
AFCH		1000					1	20	39	- B -	40	-	-	-				9900		-----
AFCH			1000				1	20	41	- - C	42	-	-	-					9900	-----
	6700	5560	3540														22920	22960	22920	

NOTES:
PHASE SUBTOTALS: A - 29620 VA; B - 28520 VA; C - 26460 VA
SUBTOTAL= 84600 VA; X 0.25LCL= 21150 VA; TOTAL= 105750 VA; 294 AMPS

MOUNTING: RECESSED — PANEL **LP2B** — VOLTAGE: 208Y/120V 3PH 4W
FED FROM: — BUS: 225A
NEMA: 1 — MAIN: 150A 3P
AIC RATING: 10KAIC — STATUS: NEW — FEEDER: 150A

Description	A	B	C	L	R	M	P	A				A	P	M	R	L	A	B	C	Description
CFH	1000						1	20	1	A - -	2	20	1				720			O. CHEMISTRY LAB
CFH		1000					1	20	3	- B -	4	20	1					720		O. CHEMISTRY LAB
CFH			1000				1	20	5	- - C	6	20	1						1000	CFH
CFH	1000						1	20	7	A - -	8	20	1				1000			CFH
CFH		1000					1	20	9	- B -	10	20	1					1000		CFH
CFH			1000				1	20	11	- - C	12	20	1						360	INSTRUMENT RM.
SPARE							1	20	13	A - -	14	20	1				360			INSTRUMENT RM.
O. CHEMISTRY LAB		1000					1	20	15	- B -	16	20	1					360		O. CHEMISTRY LAB
O. CHEMISTRY LAB			1000				1	20	17	- - C	18	20	1						1000	CFH
O. CHEMISTRY LAB	600						1	20	19	A - -	20	20	1				1000			CFH
O. CHEMISTRY LAB		720					1	20	21	- B -	22	20	1					1000		CFH
O. CHEMISTRY LAB			540				1	20	23	- - C	24	20	1						1000	CFH
CFH	1000						1	20	25	A - -	26	20	1				1000			CFH
CFH		1000					1	20	27	- B -	28	20	1					1000		CFH
CFH			1000				1	20	29	- - C	30	20	1						1000	CFH
CFH	1000						1	20	31	A - -	32	20	1				1000			CFH
CFH		1000					1	20	33	- B -	34	20	1					1000		CFH
CFH			1000				1	20	35	- - C	36	20	1						720	INSTRUMENT RM.
SPARE							1	20	37	A - -	38	20	1				720			INSTRUMENT RM.
SPARE							1	20	39	- B -	40	20	1							SPARE
SPARE							1	20	41	- - C	42	20	1							SPARE
	4600	5720	5540														5800	5080	5080	

NOTES:
PHASE SUBTOTALS: A - 10300 VA; B - 10800 VA; C - 10620 VA
SUBTOTAL= 31720 VA; X 0.25LCL= 7930 VA; TOTAL= 39650 VA; 110 AMPS

MOUNTING: RECESSED — PANEL **LP1C** — VOLTAGE: 208Y/120V 3PH 4W
FED FROM: — BUS: 225A
NEMA: 1 — MAIN: 150A 3P
AIC RATING: 10KAIC — STATUS: NEW — FEEDER: 150A

Description	A	B	C	L	R	M	P	A				A	P	M	R	L	A	B	C	Description
ACFH	1000						1	20	1	A - -	2	20	1				900			M. BIOLOGY LAB
ACFH		1000					1	20	3	- B -	4	20	1					900		M. BIOLOGY LAB
ACFH			1000				1	20	5	- - C	6	20	1						1000	M. BIOLOGY LAB
M. BIOLOGY LAB	540						1	20	7	A - -	8	20	1				900			M. BIOLOGY LAB
M. BIOLOGY LAB		720					1	20	9	- B -	10	20	1					900		M. BIOLOGY LAB
M. BIOLOGY LAB			540				1	20	11	- - C	12	20	1						1000	U.C. GLASS WASH.
M. BIOLOGY LAB	540						1	20	13	A - -	14	20	1				180			M. BIOLOGY LAB
M. BIOLOGY LAB		1000					1	20	15	- B -	16	20	1					360		M. BIOLOGY LAB
M. BIOLOGY LAB			540				1	20	17	- - C	18	20	1						1000	CFH
M. BIOLOGY LAB	1500						1	20	19	A - -	20	20	1				1000			CFH
M. BIOLOGY LAB		540					1	20	21	- B -	22	20	1					1000		CFH
M. BIOLOGY LAB			360				1	20	23	- - C	24	20	1							SPARE
M. BIOLOGY LAB	900						1	20	25	A - -	26	20	1				1000			PREP / STOCK RM.
M. BIOLOGY LAB		900					1	20	27	- B -	28	20	1					540		PREP / STOCK RM.
SPARE							1	20	29	- - C	30	20	1						1000	PREP / STOCK RM.
M. BIOLOGY LAB	900						1	20	31	A - -	32	20	1				1000			PREP / STOCK RM.
M. BIOLOGY LAB		900					1	20	33	- B -	34	20	1					1000		PREP / STOCK RM.
SPARE							1	20	35	- - C	36	20	1						720	PREP / STOCK RM.
GARBAGE DISP.	1000						1	20	37	A - -	38	20	1				540			PREP / STOCK RM.
GARBAGE DISP.		1000					1	20	39	- B -	40	20	1					1000		GARBAGE DISP.
GARBAGE DISP.			1000				1	20	41	- - C	42	20	1							SPARE
	6380	6060	3440														5520	5700	4720	

NOTES:
PHASE SUBTOTALS: A - 11900 VA; B - 11760 VA; C - 8160 VA
SUBTOTAL= 31820 VA; X 0.25LCL= 7955 VA; TOTAL= 39775 VA; 110 AMPS

MOUNTING: RECESSED — PANEL **LP2C** — VOLTAGE: 208Y/120V 3PH 4W
FED FROM: — BUS: 225A
NEMA: 1 — MAIN: 150A 3P
AIC RATING: 10KAIC — STATUS: NEW — FEEDER: 150A

Description	A	B	C	L	R	M	P	A				A	P	M	R	L	A	B	C	Description
G. CHEMISTRY LAB	360						1	20	1	A - -	2	20	1				1000			CFH
G. CHEMISTRY LAB		180					1	20	3	- B -	4	20	1					1000		CFH
G. CHEMISTRY LAB			360				1	20	5	- - C	6	20	1						1000	CFH
INSTRUMENT RM.	720						1	20	7	A - -	8	20	1				1000			CFH
INSTRUMENT RM.		540					1	20	9	- B -	10	20	1					1000		CFH
INSTRUMENT RM.			540				1	20	11	- - C	12	20	1						1000	CFH
G. CHEMISTRY LAB	180						1	20	13	A - -	14	20	1				1000			CFH
G. CHEMISTRY LAB		360					1	20	15	- B -	16	20	1					1000		CFH
G. CHEMISTRY LAB			1000				1	20	17	- - C	18	20	1						1000	CFH
G. CHEMISTRY LAB	600						1	20	19	A - -	20	20	1				1000			CFH
G. CHEMISTRY LAB		720					1	20	21	- B -	22	20	1					1000		CFH
G. CHEMISTRY LAB			720				1	20	23	- - C	24	20	1						1000	CFH
CFH	1000						1	20	25	A - -	26	20	1				720			G. CHEMISTRY LAB
CFH		1000					1	20	27	- B -	28	20	1					720		G. CHEMISTRY LAB
CFH			1000				1	20	29	- - C	30	20	1						720	G. CHEMISTRY LAB
G. CHEMISTRY LAB	720						1	20	31	A - -	32	20	1				720			G. CHEMISTRY LAB
G. CHEMISTRY LAB		720					1	20	33	- B -	34	20	1					720		G. CHEMISTRY LAB
SPARE							1	20	35	- - C	36	20	1						720	G. CHEMISTRY LAB
SPARE							1	20	37	A - -	38	20	1				720			G. CHEMISTRY LAB
SPARE							1	20	39	- B -	40	20	1							SPARE
SPARE							1	20	41	- - C	42	20	1							SPARE
	3480	3520	3620														6160	5440	5440	

NOTES:
PHASE SUBTOTALS: A - 9640 VA; B - 8960 VA; C - 9060 VA
SUBTOTAL= 27680 VA; X 0.25LCL= 6915 VA; TOTAL= 34575 VA; 96 AMPS

	LP2D	LP1D	LP1A
	LP2E	LP2A	LP1B
		LP2B	LP1C
		LP2C	

tBP architecture planning interiors management
tBP/Architecture
1000 Burnett Avenue, Suite 140
Concord, CA 94520
p: 925.246.6419 f: 925.246.6495
LICENSED ARCHITECT RICHARD A. MANGINI NO. C-8685 REN. 12-31-05 STATE OF CALIFORNIA
REGISTERED PROFESSIONAL ENGINEER MICHAEL E. WALL E 012307 ELECTRICAL STATE OF CALIFORNIA
architect

MICHAEL WALL ENGINEERING
619-231-0600
619-231-0640 (fax)
www.mwalleng.com
1341 India Street
San Diego, CA 92101
REGISTERED ELECTRICAL ENGINEERS
consultant

IDENTIFICATION STAMP
DIVISION OF THE STATE ARCHITECT
agency

SCIENCE BUILDING
LOS MEDANOS COLLEGE
Contra Costa Community College District
owner

MWE project number: 0358
file name: 03158-PS1
drawn by: LF checked by: SH
date: NOVEMBER 5, 2004
Rev. date: description:

drawing title: building no.:
PANEL SCHEDULES
LMC SCIENCE 313-023-112.01-0-00.00
drawing no.:
LE3-1
drawing of

S. J. AMOROSO
Request For Information/Clarification

DSA FILE NO. 7-C1
DSA APPL. No. 01-106226

To: tBP/Architecture, 1000 Burnett Ave, Suite 140, Concord, CA 94520
Attn: Celia Chiang, Tom Beckett
Fax: 925-246-6495

Project: LOS MEDANOS COLLEGE SCIENCE BUILDING, Contra Costa Community College District
tBP p/n: 20247.00

Subj.: Pedestal Outlets in Lab. Casework
Reference (dwg, spec.): Lab. Casework Drwgs.
RFI No: **349**
Subcontractor RFI: EWS 31

Reply Requested By: 9/25/06

INFORMATION REQUESTED: Date: 9/18/06

Please note the attached EWS RFI No. 31 regarding the Electrical and Telephone Pedestal Outlets which the Lab. Casework Drawings call out for Horizontal Boxes. Hubbell 6687 and 6685 series boxes do not have horizontal boxes. Attached is product data for the Wiremold 525 Series which may be an option but it doesn't raise the outlets above the counter. Please advise.

SUGGESTED SOLUTION:
Cost Impact: ☐ Schedule Impact: ☐ days By: Justin Warren

RESPONSE: DATE:

Our response to RFI #349 to state: LE plans specify the use of the Wiremold Tablesource module at window wall locations (see detail 6 sheet LE4-1). This model is applicable for all backsplash applications, and it does mount horizontally (see attached cutsheet).

Richard H. Cate/RFD - 9/27/06

RFI # 000
Page 1

WIREMOLD® Wire Management Systems — TableSource™ Work Surface Modules

Work Surface Integration
For Communications and Power Applications

Datacom Connectivity Options

Design a TableSource Solution

TableSource Work Surface Modules

10/30/2006 13:43 FAX TBP ARCHITECTURE → SJA AT LMC 001/004

E-MAILED 10/30/06

To: 427 7570

S. J. AMOROSO
Request For Information/Clarification

DSA FILE NO. 7-C1
DSA APPL. No. 01-106226

To: tBP/Architecture, 1000 Burnett Ave, Suite 140, Concord, CA 94520
Attn: Celia Chiang, Tom Beckett
Fax: 925-246-6495

Project: LOS MEDANOS COLLEGE SCIENCE BUILDING, Contra Costa Community College District
tBP p/n: 20247.00

Subj.: Pedestal Outlets in Lab. Casework
Reference (dwg, spec.): Lab. Casework Drwgs.
RFI No: **349.1**
Subcontractor RFI: EWS 54

Reply Requested By: 10/31/06

INFORMATION REQUESTED: Date: 10/24/06

Please note the attached EWS RFI No. 54 regarding the wiremold table source module, proposed in RFI No. 349, which does not come with GFI Duplex. Please advise.

SUGGESTED SOLUTION:
Cost Impact: ☐ Schedule Impact: ☐ days By: Justin Warren

RESPONSE: DATE: 10/27/06

Use of the Wiremold 525 series as proposed is acceptable. As stated in the RFI, this will require the use of two separate pedestal boxes at locations with both power and data. Two GFIs are shown on the plans in Room 242 along grid line "E", one on either side of the sink.

Richard Cate/RFD - 10/27/06

EDWARD W. SCOTT ELECTRIC CO., INC.
435 HARRIET STREET
San Francisco, CA 94103-4914
Phone: (415) 626-0701 Fax: (415) 626-2837

REQUEST FOR INFORMATION

PROJECT: LMC SCIENCE BLDG. R.F.I.# 31 R.F.I. Date 9/14/06
JOB: 2451 ACTUAL REPLY DATE ____

TO: MARK DELGADO
OF: AMOROSO CONST.
REF: DWG: LAB. CASEWORK DWGS.
LOCATION: VARIOUS LABS

POTENTIAL COST IMPACT
___ COST ✓ SCHEDULE
___ OTHER ___ LABOR
___ NO IMPACT ___ MATERIAL

INFORMATION REQUESTED: THE RETURNED LABORATORY CASEWORK SHOP DWGS. NOTED THAT THE ELEC. & TEL PEDESTAL OUTLETS WERE TO BE HORIZONTAL. WE ARE UNABLE TO FIND SUCH A BOX IN THE HUBBELL 6687 OR 6685 SERIES. THE WIREMOLD 525 SERIES MAY BE AN OPTION, BUT IT DOESN'T RAISE THE OUTLETS ABOVE THE COUNTER. PLEASE ADVISE.

REPLY REQUIRED BY: ASAP SIGNED: [signature]
NOTE: IF NO REPLY IS RECEIVED BY US BY THE ABOVE NOTED DATE. A TIME EXTENSION WILL BE REQUIRED WITH POSSIBLE COST IMPACTS.

RESPONSE:

WIREMOLD — 525 Series Service Fittings

Flexible and Durable Activations for Multiple Systems

Datacom Connectivity Options

Activation Accessories

Four-Piece Service Fittings

525 Series Accessories

Los Medanos College
4CD Proj.# : L-565-B-23-SC
Science Building

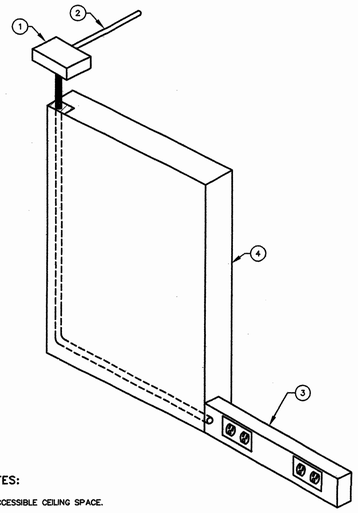

KEY NOTES:

1. J-BOX IN ACCESSIBLE CEILING SPACE.
2. EMT CONDUIT AND WIRE TO PANEL BOARD(S).
3. MULTI-OUTLET WIREWAY ISODUCT SERIES AL3800 MOUNTED ON BENCH PER ARCHITECTURAL REQUIREMENTS. WIREWAY SECTIONS SHALL BE INDIVIDUAL PIECES PER WORKSTATION AND SHALL FIT TIGHT AT EACH END PER ARCHITECTURAL REQUIREMENTS. SEE ARCHITECTURAL DRAWINGS FOR FURTHER INFORMATION.
4. PIPE DROP UTILITY CHASE WITH REMOVABLE COVER.

7 SCHEMATIC ELECTRICAL SERVICE FROM WALL MOUNTED PIPE DROP

NO SCALE 16060-08

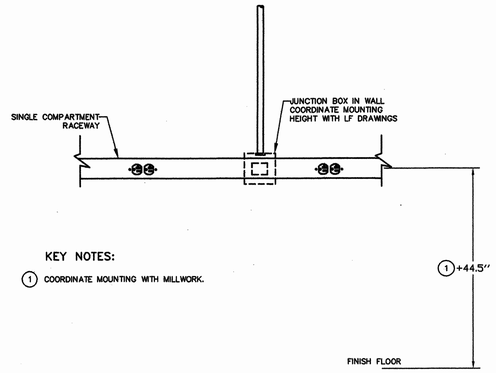

KEY NOTES:

1. COORDINATE MOUNTING WITH MILLWORK.

4 SINGLE COMPARTMENT RACEWAY FEED

NO SCALE

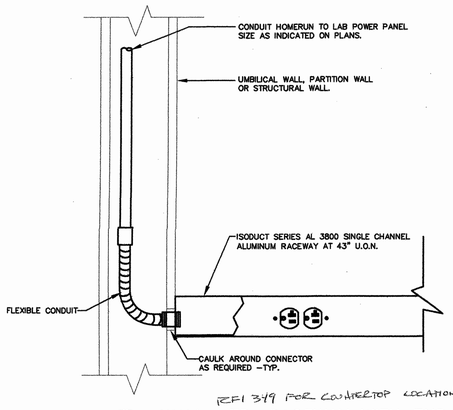

RFI 349 FOR COUNTERTOP LOCATIONS

5 WALL MTD. RACEWAY WITH END FEED ENTRY

NO SCALE

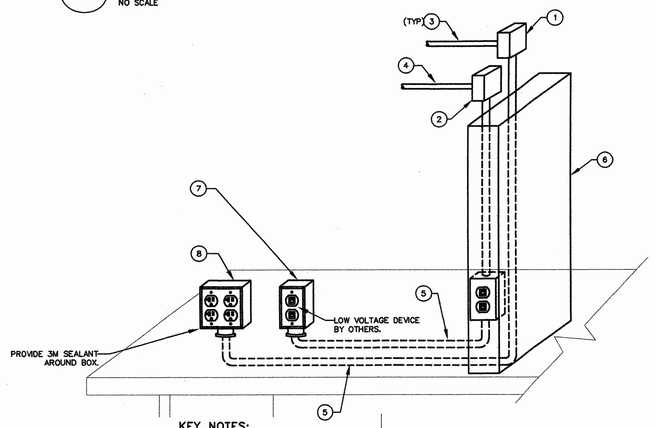

KEY NOTES:

1. 4" SQUARE J-BOX IN ACCESSIBLE CEILING SPACE.
2. 4-11/16" J-BOX IN ACCESSIBLE CEILING SPACE.
3. EMT CONDUIT AND WIRE TO PANEL BOARD AS PER PLANS.
4. 1½"EMT CONDUIT PER TELE/DATA LOCATION TO ACCESSIBLE CEILING IN CORRIDOR.
5. CONDUIT STUB FROM SLAB OR FROM PIPE DROP. ROUTE CONDUIT THROUGH CHASE IN MILLWORK.
6. PIPE DROP. UTILIZE FOR CONCEALMENT OF CONDUIT.
7. AT WINDOW WALL LOCATIONS PROVIDE WIREMOLD TABLESOURCE MODULE. AT ALL OTHER LOCATIONS PROVIDE AND INSTALL HUBBELL ONE-GANG PEDESTAL RAISED 1" TO 2" WITH DEVICES AS INDICATED WITH STAINLESS STEEL PLATES.
8. AT WINDOW WALL LOCATIONS PROVIDE WIREMOLD TABLESOURCE MODULE. AT ALL OTHER LOCATIONS PROVIDE AND INSTALL HUBBELL TWO-GANG PEDESTAL RAISED 1" TO 2" WITH QUAD RECEPTACLES WITH STAINLESS STEEL PLATES.

GENERAL NOTES:

1. SEE FLOOR PLANS FOR DEVICE QUANTITIES.
2. WHERE PIPE DROP DOES NOT EXIST ROUTE CONDUITS THROUGH CHASE IN CASE WORK. STUB DOWN THROUGH SLAB. ROUTED THROUGH ACCESSIBLE CEILING ON FLOOR BELOW, STUB UP AT PANEL.

6 LAB BENCH PEDESTAL DETAIL

NO SCALE 16130-08

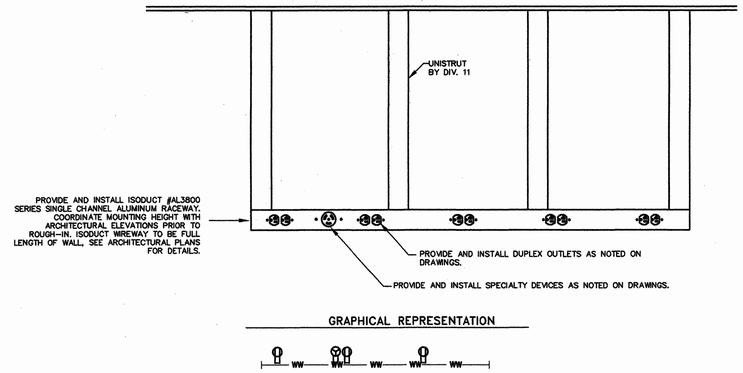

GRAPHICAL REPRESENTATION

GENERAL NOTES:

1. MOUNT TO UNISTRUT OVERHEAD SERVICE CARRIER. SEE LF DRAWINGS FOR MORE INFORMATION.
2. UTILIZE PIPE DROP WHERE PROVIDED.

1 SCHEMATIC WIREWAY DETAIL AT OVER HEAD SERVICE CARRIER LOCATIONS

NO SCALE 16050-02

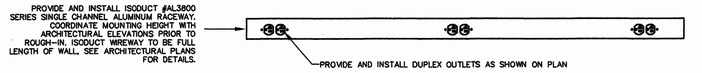

GRAPHICAL REPRESENTATION

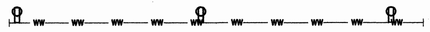

2 SCHEMATIC WIREWAY DETAIL AT SHELF LOCATIONS

NO SCALE 16110-20

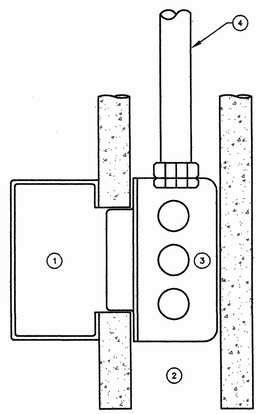

KEY NOTES:

1. TYPICAL WALL-MOUNTED WIREWAY. WIREMOLD ISODUCT AL 3800 SERIES CUT OUT IN RACEWAY TO BE DEBURRED AND SMOOTH.
2. INTERSTITIAL SPACE IN WALL.
3. 4S DEEP J-BOX MOUNTED TO STRUCTURE WITH WALL.
4. CONDUIT TO POWER PANEL.

3 WALL ENTRY TO RACEWAY

NO SCALE 16110-17

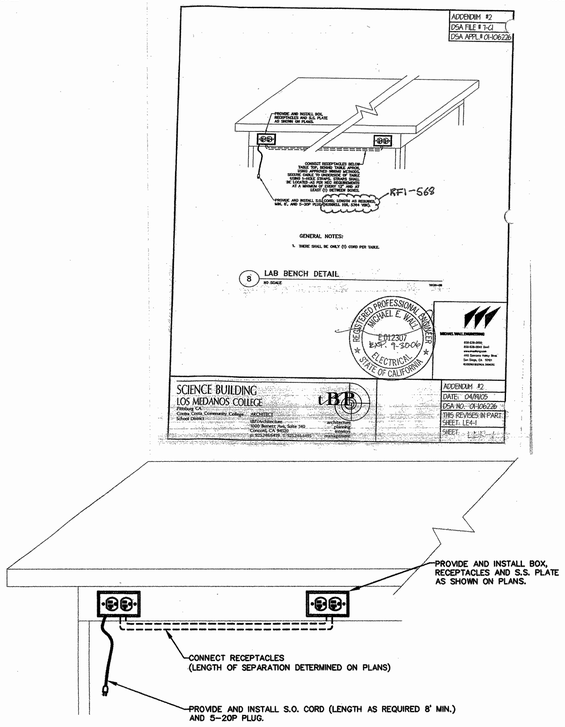

8 LAB BENCH DETAIL

NO SCALE 16130-08

tBP
architecture
planning
interiors
management

REGISTERED PROFESSIONAL ENGINEER MICHAEL E. WALL E-012307 ELECTRICAL STATE OF CALIFORNIA

REGISTERED ARCHITECT MICHAEL W. BOURGON, A.I.A. No. C-8656 EXP. 12-31-05 STATE OF CALIFORNIA

tBP/Architecture
1000 Burnett Avenue, Suite 140
Concord, CA 94520
p: 925.246.6419 f: 925.246.6495

architect

MICHAEL WALL ENGINEERING
619-231-0600
619-231-0640 (fax)
www.mwalleng.com
1341 India Street
San Diego, CA 92101
REGISTERED ELECTRICAL ENGINEERS

consultant

IDENTIFICATION STAMP
DIVISION OF THE STATE ARCHITECT
APPL ID 1 0 6 2 2 6
4/8/05
DATE

agency

SCIENCE BUILDING LOS MEDANOS COLLEGE

Contra Costa Community College District

owner

MWE project number : 03158

file name: 03158-DS1

drawn by: LF checked by: SH

date: NOVEMBER 15, 2004

Rev:	date:	description:

drawing title: DETAIL SHEET

building no.:

LMC SCIENCE 313-023-112.01-0-00.00

drawing no.: LE4-1

drawing of

Nov. 05, 2004 - 11:04am, Z:\Proj03\03158\Dwg\03158-DS1.dwg

S. J. AMOROSO
Request For Information/Clarification

DSA FILE NO. 7-C1
DSA APPL. No. 01-106226

To: IBI/Architecture
1000 Burnett Ave, Suite 140
Concord, CA 94520

Attn: Carla Chiang, Tom Beckett
Fax: 925-245-5490

Project: LOS MEDANOS COLLEGE
SCIENCE BUILDING
Contra Costa Community College District

IBI# pm: 20247.00

Subj.: Point of Connection of Fume Hood/Lab Plumbing
Reference (dwg, spec.): 3/P3-1

RFI No: **509**
Subcontractor RFI: Dowdle 75

Reply Requested By: 4/6/07

INFORMATION REQUESTED: **Date:** 3/30/07

Please note the attached Dowdle and Sole RFI No. 75 regarding the point of connection for the fume hood/lab plumbing which require no individual SOVs. Please advise.

SUGGESTED SOLUTION:
Cost Impact: ☐ **Schedule Impact:** ☐ days **By:** Justin Vernon

RESPONSE: **DATE:**

Confirmed that per fume hood detail 3/LP3.1, no individual shut-off valves are required at fume hood POC 6" above hood.

Jim Wieaver / IBI Architecture
R. Calle / RFD

4/6/07

RFI # 000
Page 1

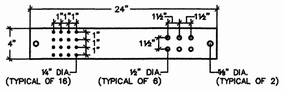

MAIN GROUND BUS BAR

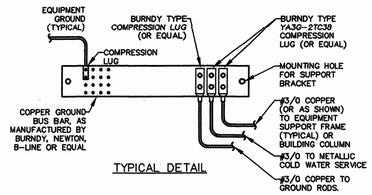

TYPICAL DETAIL

3 GROUNDING DETAILS

NO SCALE

16150-03

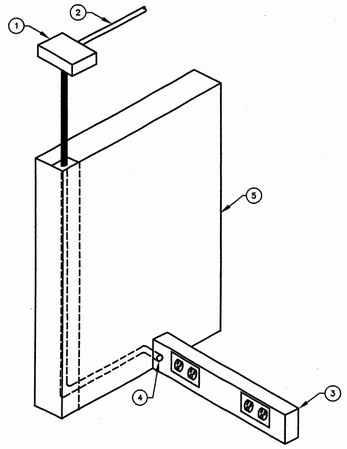

KEY NOTES:

1. J-BOX IN ACCESSIBLE CEILING SPACE.
2. EMT CONDUIT AND WIRE TO PANEL BOARD(S).
3. MULTI-OUTLET WIREWAY ISODUCT SERIES AL3800 MOUNTED ON BENCH PER ARCHITECTURAL REQUIREMENTS. WIREWAY SECTIONS SHALL BE INDIVIDUAL PIECES PER WORKSTATION AND SHALL FIT TIGHT AT EACH END PER ARCHITECTURAL REQUIREMENTS. SEE ARCHITECTURAL DRAWINGS FOR FURTHER INFORMATION.
4. ¾" NIPPLE CONNECTION BETWEEN WIREWAY SECTIONS THROUGH CASEWORK RISER.
5. PIPE DROP UTILITY CHASE WITH REMOVABLE COVER.

1 SCHEMATIC ELECTRICAL SERVICE FROM ISLAND MOUNTED PIPE DROP

NO SCALE

16060-09

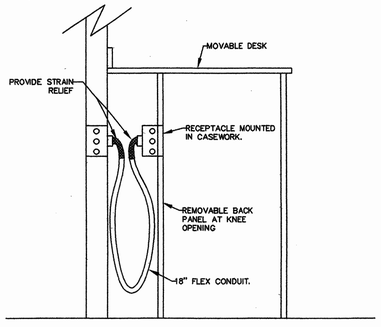

GENERAL NOTES:

1. WHERE RECEPTACLES SHOWN AT KNEE OPENINGS (KO) OR AT INSIDE OF CABINET, DIV 16 SHALL SET RECEPTACLE IN CASEWORK AND MAKE CONNECTION. CONNECTION SHALL BE MIN 18" OF FLEX CONDUIT AT REMOVABLE DESK PANELS AT KNEE OPENINGS.

2 MOVABLE DESK DETAIL

NO SCALE

tBP/architecture
1000 Burnett Avenue, Suite 140
Concord, CA 94520
p: 925.246.6419 f: 925.246.6495

architecture
planning
interiors
management

MICHAEL WALL ENGINEERING
619-231-0600
619-231-0640 (fax)
www.mwaleng.com
1341 India Street
San Diego, CA 92101
REGISTERED ELECTRICAL ENGINEERS

consultan

IDENTIFICATION STAMP
DIVISION OF THE STATE ARCHITECT
APP. 10628
DSA

agenc

SCIENCE BUILDING
LOS MEDANOS COLLEGE

Contra Costa Community College District

owne

MWE project number : 03158
file name: 03158-DS2
drawn by: LF checked by: SH
date: NOVEMBER 15, 2004

Rev:	date:	description:

drawing title: DETAIL SHEET
building no.:
LMC SCIENCE 313-023-112.01-0-00
drawing no.: LE4-2
drawing of

Nov. 05, 2004 - 11:05am, Z:\Proj03\03158\Dwg\03158-DS2.dwg

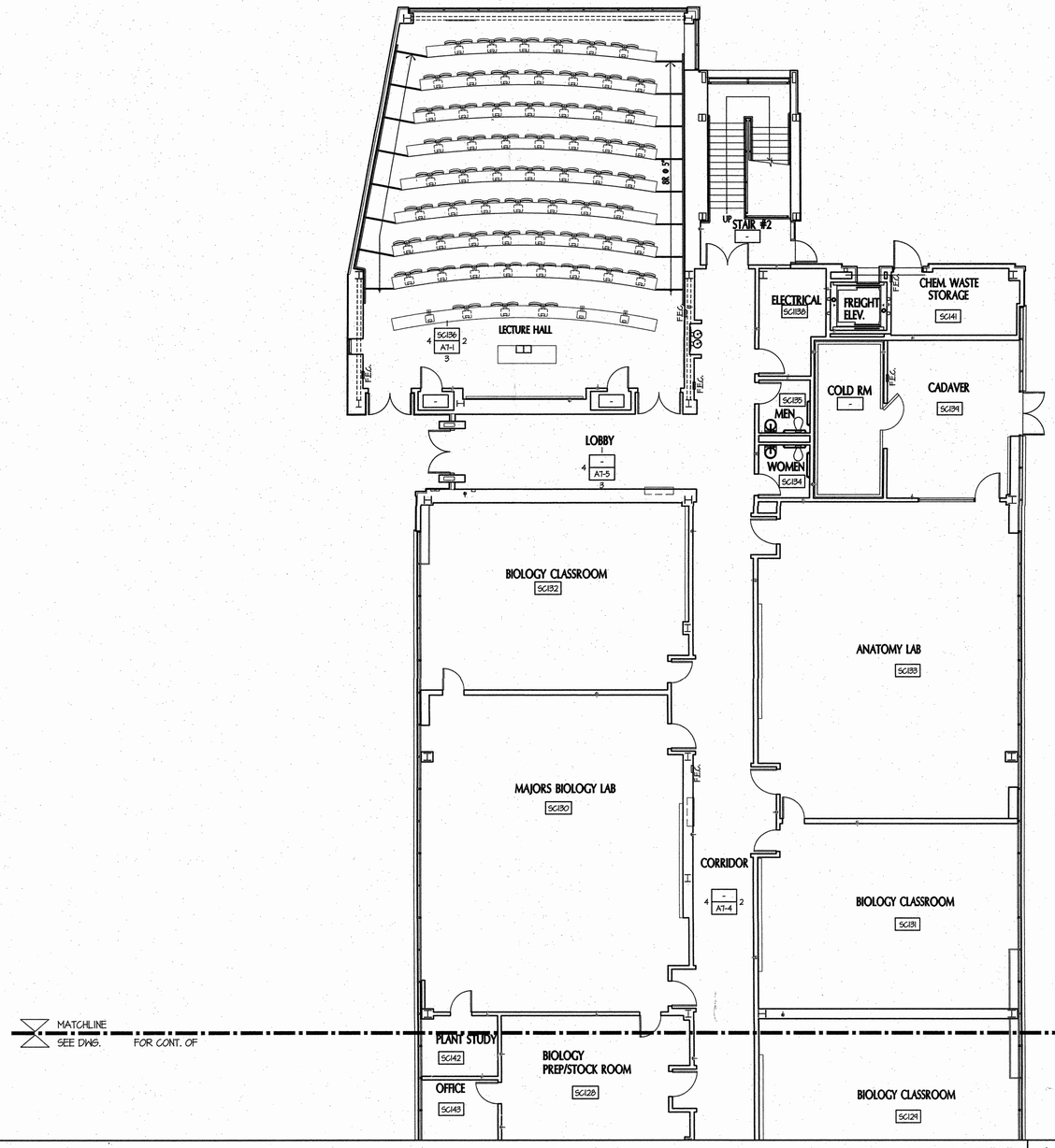

FIRST FLOOR PLAN PART "A" 1

SCALE: 1/8"=1'-0"

S. J. AMOROSO
Request For Information/Clarification

DSA FILE NO. 7-C1
DSA APPL. No. 01-106226

To: tBP/Architecture
1000 Burnett Ave, Suite 140
Concord, CA 94520
Attn: Carla Chiang, Tom Beckett
Fax: 925-246-6495

Project: LOS MEDANOS COLLEGE SCIENCE BUILDING
Contra Costa Community College District
tBP ph: 202471.00

Subj.: Change or room numbers
Reference (dwg, spec):
Reply Requested By: 4/18/07

RFI No: 514
Subcontractor RFI:

INFORMATION REQUESTED: Date: 4/11/07

We understand from review of the signage submittal and also subsequent conversations at project meetings that the room numbering for the building will NOT be per our construction documents. A sketch has been provided to depict this but we understand that changes will be made to the previously provided sketch.

Please provide a final sketch of room numbers, incorporating the latest information. Utilizing the previous sketch with delta clouds would be acceptable.

SUGGESTED SOLUTION:
Cost Impact: ☐ Schedule Impact: ☐ days By: Justin Warren

RESPONSE: DATE: 04/18/07

See attached drawings to replace previous drawings issued on 03/26/07.
Note blended room deviation at 2nd floor.
These room numbers are to be utilized for signage and fire alarm panel programming.

Jeff Mills
tBP Architecture

RFI # 000
Page 1

tBP
architecture
planning
interiors
management

tBP/Architecture
1000 Burnett Avenue, Suite 140
Concord, CA 94520
p: 925.246.6419 f: 925.246.6495

LICENSED ARCHITECT • STATE OF CALIFORNIA • VINCENT MY LEE • LICENSE NO. C-18801

architect

consultant

IDENTIFICATION STAMP
DIV. OF THE STATE ARCHITECT
OFFICE OF REGULATION SERVICES
APP. NO. 01-106226
AC.____ FS.____ SS.____
DATE____
FILE No. 7C1

Division of the State Architect
Regional Office
1515 Clay St, Suite 1201
Oakland, CA 94612
p: 415-396-9500 f:

agency

SCIENCE BUILDING
LOS MEDANOS COLLEGE

Contra Costa Community College District

owner

tBP project number : 202471.00

file name: 1ST-FLR-PLAN

drawn by: MV checked by:

date: NOVEMBER 15, 2004

Rev:	date:	description:
1	3/18/05	ADDENDUM #1
2	4/19/05	ADDENDUM #2

RESPONSE TO RFI 514 FOR ROOM NUMBERING

drawing title:

FIRST FLOOR PLAN PART "A"

LMC SCIENCE 313-023-T12.01-0-00.00

drawing no:

A1-1

RESPONSE TO RFI 514

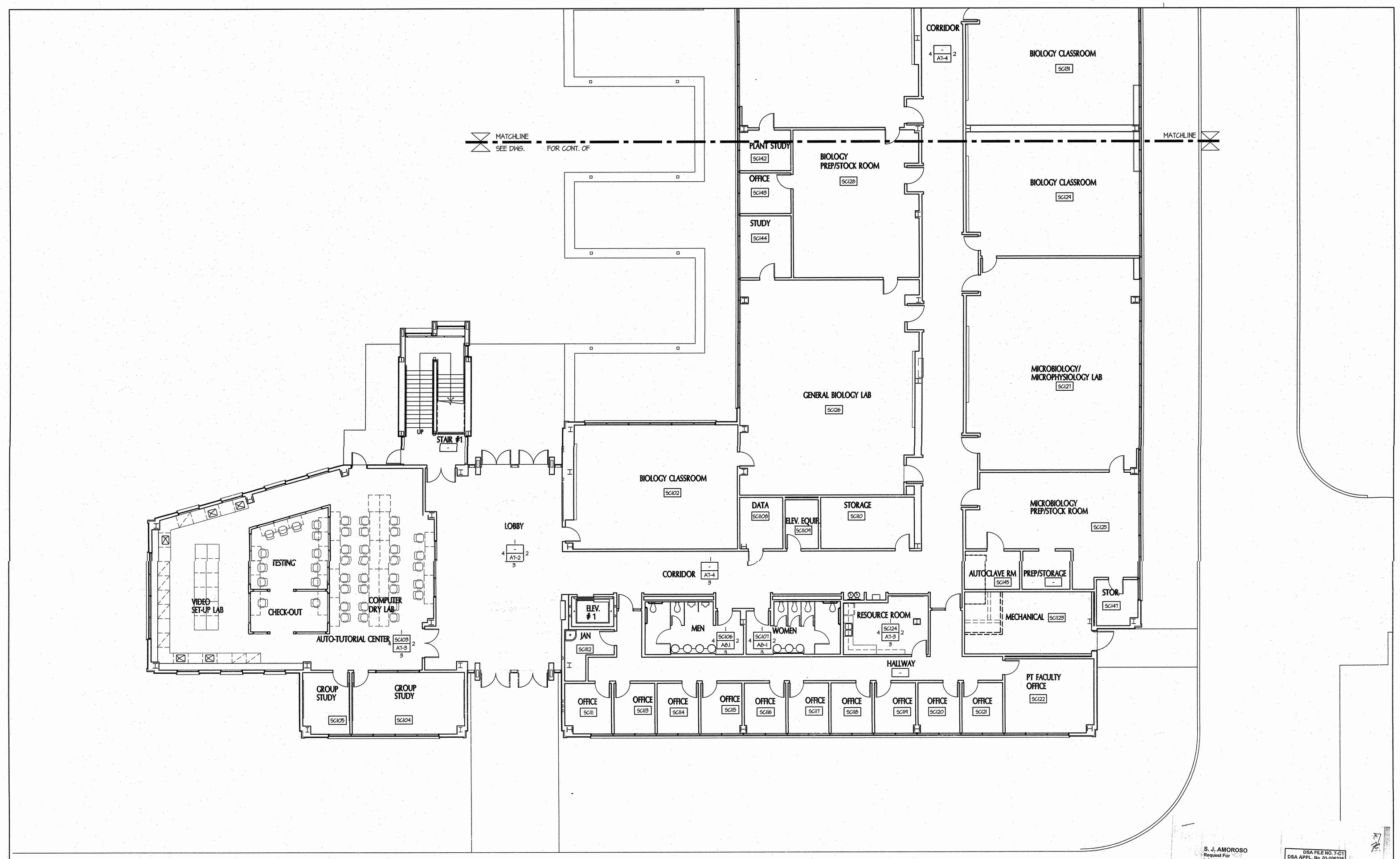

FIRST FLOOR PLAN PART "B" | 1

SCALE: 1/8"=1'-0"

S. J. AMOROSO
Request For Information/Clarification

DSA FILE NO. 7-C1
DSA APPL. No. 01-108226

To: tBP/Architecture
1000 Burnett Ave, Suite 140
Concord, CA 94520

Attn: Celia Chiang, Tom Beckett
Fax: 925-246-6495

Subj.: Change or room numbers

Reference (dwg, spec.):

Reply Requested By: 4/18/07

Project: LOS MEDANOS COLLEGE
SCIENCE BUILDING
Contra Costa Community College District

tBP p/n: 20247.00

RFI No: 514
Subcontractor RFI:

INFORMATION REQUESTED: Date: 4/11/07

We understand from review of the signage submittal and also subsequent conversations at project meetings that the room numbering for the building will NOT be per our construction documents. A sketch has been provided to depict this but we understand that changes will be made to the previously provided sketch.

Please provide a final sketch of room numbers, incorporating the latest information. Utilizing the previous sketch with delta clouds would be acceptable.

SUGGESTED SOLUTION:

Cost Impact: ☐ Schedule Impact: ☐ days By: Justin Warren

RESPONSE: DATE: 04/18/07

See attached drawings to replace previous drawings issued on 03/26/07.
Note minor room revision at 2nd floor.
These room numbers are to be utilized for signage and fire alarm panel programming.

Jeff Mills
tBP Architecture

RFI # 000
Page 1

tBP
architecture
planning
interiors
management

tBP/Architecture
1000 Burnett Avenue, Suite 140
Concord, CA 94520
p: 925.246.6499 f: 925.246.6495

LICENSED ARCHITECT • STATE OF CALIFORNIA • JEFFREY A. MILLS • No. C-9895

architect

consultant

IDENTIFICATION STAMP
DIV. OF THE STATE ARCHITECT
OFFICE OF REGULATION SERVICES
APP. NO. 01-108226
AC. FLS. SS.
DATE.
FILE No. 7C1

Division of the State Architect
Regional Office
1515 Clay St., Suite 1201
Oakland, CA 94612
p: 415-396-9500 f:

agency

SCIENCE BUILDING LOS MEDANOS COLLEGE

Contra Costa Community College District

owner

tBP project number : 20247.00

file name: 1ST-FLR-PLAN

drawn by: MV checked by:

date: NOVEMBER 15, 2004

Rev.	date:	description:
1	3/18/05	ADDENDUM #1
2	4/19/05	ADDENDUM #2 RESPONSE TO RFI 514 FOR ROOM NUMBERING

drawing title:

FIRST FLOOR PLAN PART "B"

LMC SCIENCE 313-023-T12.01-0-00.00

drawing no:

A1-2

RESPONSE TO RFI 514

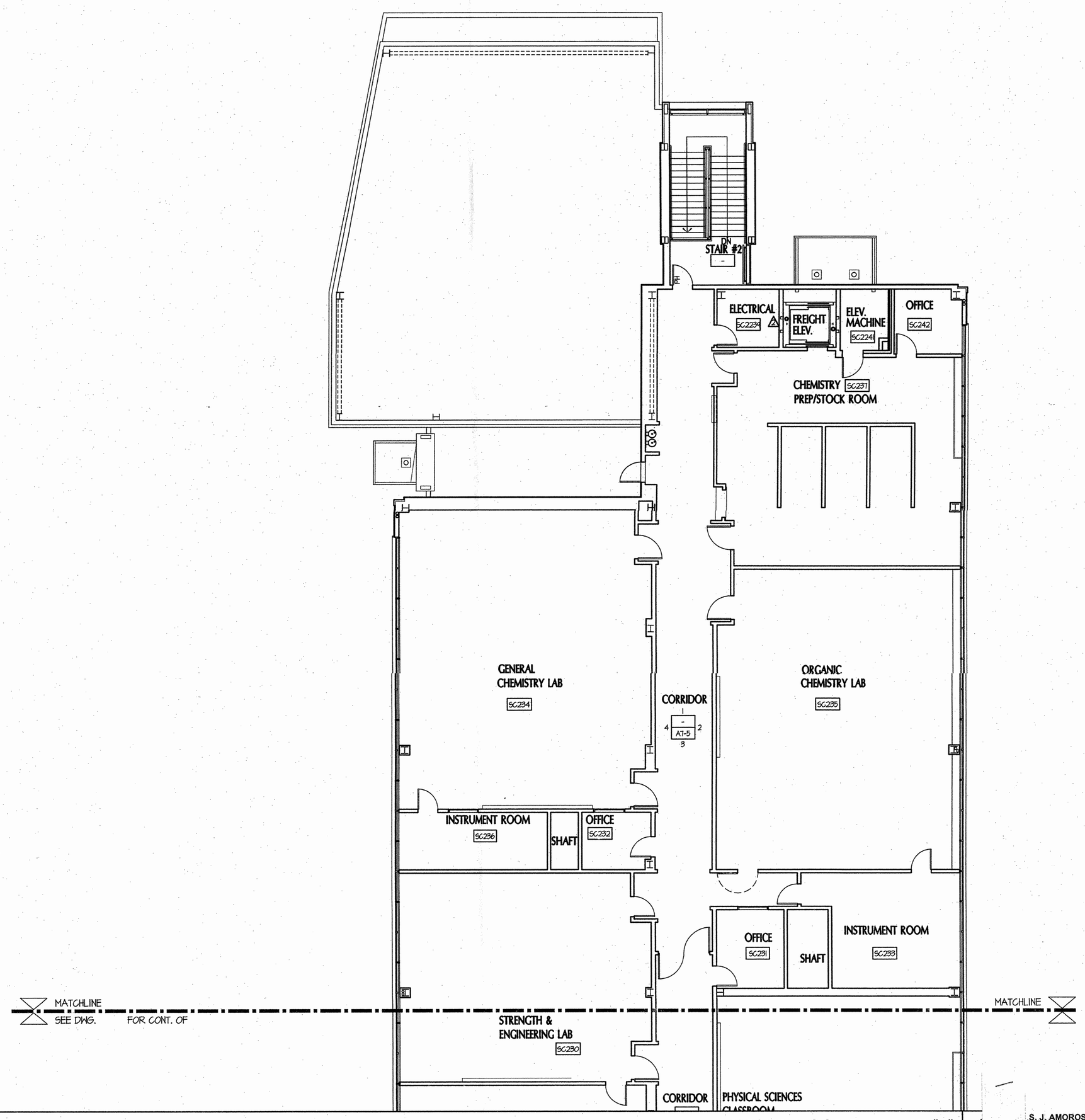

SECOND FLOOR PLAN PART "A"
SCALE: 1/8"=1'-0"

S. J. AMOROSO
Request For Information/Clarification

DSA FILE NO. 7-C1
DSA APPL. No. 01-106226

To: tBP/Architecture, 1000 Burnett Ave, Suite 140, Concord, CA 94520
Attn: Celia Chiang, Tom Beckett
Fax: 925-246-6495
Sub.: Change pr room numbers
Reference (dwg, spec.):
Reply Requested By: 4/18/07

Project: LOS MEDANOS COLLEGE SCIENCE BUILDING, Contra Costa Community College District
tBP pfc 20247.00
RFI No: 514
Subcontractor RFI:

INFORMATION REQUESTED: Date: 4/1/07

We understand from review of the signage submittal and also subsequent conversations at project meetings that the room numbering for the building will NOT be per our construction documents. A sketch has been provided by Jeff to depict this but we understand that changes will be made to the previously provided sketch.

Please provide a final sketch of room numbers, incorporating the latest information. Utilizing the previous sketch with delta clouds would be acceptable.

SUGGESTED SOLUTION:
Cost Impact: ☐ Schedule Impact: ☐ days By: Justin Warren

RESPONSE: DATE: 04/18/07

See attached drawings to replace previous drawings issued on 03/26/07.
Note clouded room revision at 2nd floor.
These room numbers are to be utilized for signage and fire alarm panel programming.

Jeff Mills
tBP Architecture

RFI # 000
Page 1

tBP
architecture
planning
interiors
management

tBP/Architecture
1000 Burnett Avenue, Suite 140
Concord, CA 94520
p: 925.246.6419 f: 925.246.6495

LICENSED ARCHITECT • KIMBERLY A. BECKETT • NO. C-9488 • STATE OF CALIFORNIA

architect

consultant

IDENTIFICATION STAMP
DIV. OF THE STATE ARCHITECT
OFFICE OF REGULATION SERVICES
APP. NO. 01-106226
AC.____ FS.____ SS.____
DATE_____
FILE No. 7-C1

Division of the State Architect
Regional Office
1515 Clay St., Suite 1201
Oakland, CA 94612
p: 415-396-9500 f:

agency

SCIENCE BUILDING
LOS MEDANOS COLLEGE

Contra Costa Community College District

owner

tBP project number : 20247.00
file name: 2ND-FLR-PLAN
drawn by: MV, VL checked by:
date: NOVEMBER 15, 2004

Rev:	date:	description:
1	4/19/05	ADDENDUM #2 RESPONSE TO RFI 514 FOR ROOM NUMBERING

drawing title:
SECOND FLOOR PLAN PART "A"

LMC SCIENCE 313-023-112.01-0-00.00
drawing no:
A1-3
RESPONSE TO RFI 514

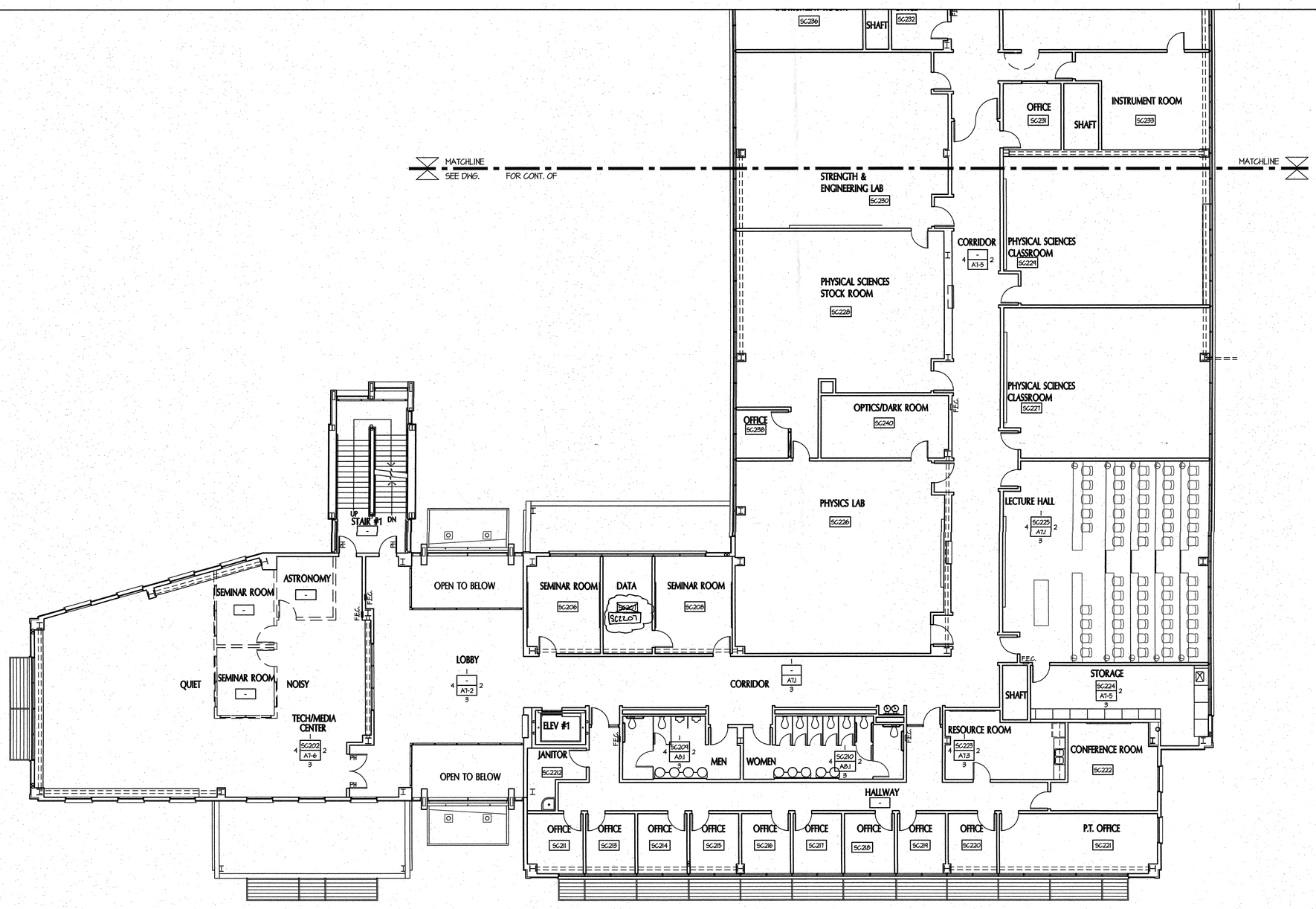

SECOND FLOOR PLAN PART "B"
SCALE: 1/8"=1'-0"

1

S. J. AMOROSO
Request For Information/Clarification

DSA FILE NO. 7-C1
DSA APPL. No. 01-106226

To: tBP/Architecture, 1000 Burnett Ave., Suite 140, Concord, CA 94520
Attn: Celia Chiang, Tom Beckett
Fax: 925-246-6495

Project: LOS MEDANOS COLLEGE SCIENCE BUILDING, Contra Costa Community College District
tBP p/n: 20247.00

Subj.: Change of room numbers
Reference (dwg, spec): Reply Requested By: 4/18/07

RFI No: 514
Subcontractor RFI:

INFORMATION REQUESTED: Date: 4/11/07

We understand from review of the signage submittal and also subsequent conversations at project meetings that the room numbering for the building will NOT be per our construction documents. A sketch has been provided to depict this but we understand that changes will be made to the previously provided sketch.

Please provide a final sketch of room numbers, incorporating the latest information. Utilizing the previous sketch with delta clouds would be acceptable.

SUGGESTED SOLUTION:
Cost Impact: ☐ Schedule Impact: ☐ days By: Justin Warren

RESPONSE: DATE: 04/18/07

See attached drawings to replace previous drawings issued on 03/26/07.
Note pinoded room revision at 2nd floor.
These room numbers are to be utilized for signage and fire alarm panel programming.

Jeff Mills
tBP Architecture

RFI # 000
Page 1

tBP architecture planning interiors management

LICENSED ARCHITECT STATE OF CALIFORNIA

tBP/Architecture
1000 Burnett Avenue, Suite 140
Concord, CA 94520
p: 9252466419 f: 9252466495

architect

consultant

IDENTIFICATION STAMP
DIV. OF THE STATE ARCHITECT
OFFICE OF REGULATION SERVICES
APP. NO. 01-106226
AC. FLS. SS.
DATE
FILE No. 7-C1

Division of the State Architect
Regional Office
1515 Clay St., Suite 1201
Oakland, CA 94612
p: 415-396-9500 f:

agency

SCIENCE BUILDING
LOS MEDANOS COLLEGE

Contra Costa Community College District

owner

tBP project number : 20241.00

file name: 2ND-FLR-PLAN

drawn by: MV, VL checked by:

date: NOVEMBER 15, 2004

Rev.	date:	description:
1	3/18/05	ADDENDUM #1
2	4/19/05	ADDENDUM #2

RESPONSE TO RFI 514 RE ROOM NUMBERING

drawing title:
SECOND FLOOR PLAN PART "B"

LMC SCIENCE 313-023-T12.01-0-00.00

drawing no:
A1-4

RESPONSE TO RFI 514