# EQUIPMENT LIST

| Symbol | Description |
|---|---|
| ACI 1, ACO 1, ACI 2, ACO 2, ACI 3, ACO 3 | "MITSUBISHI" DUCTLESS SPLIT-TYPE AIR CONDITIONER MS24WN/MU24WN HAVING A COOLING CAPICITY OF 22,800 BTUH AT ARI CONDITIONS. MINIMUM DRY COIL AIR FLOW AT LOW-MEDIUM-HIGH SPEEDS SHALL BE 431-491-565 CFM. MINIMUM EER/SEER IS 10.5 AND MAXIMUM POWER CONSUMPTION IS 2,170W AT ARI CONDITIONS. 115V./ 1ø/ 60Hz POWER SUPPLY TO INDOOR AND 208/230V./ 1ø/ 60Hz POWR SUPPLY TO OUTDOOR UNIT. PROVIDE MANUFACTURER'S REFRIGERANT PIPE PACKAGE. APPROXIMATE WEIGHT = 40 LBS. (INDOOR) AND 152 LBS. (OUTDOOR). <br> ACI 4, ACO 4 — Added ACI/4 and ACO/4 to Equipment List. ADDENDUM No. 1 |
| ACS 1, CU 1, ACS 2, CU 2 | "TRANE" SPLIT COOLING SYSTEM: <br> INDOOR UNIT - MODEL NUMBER TWE018P13 CONVERTABLE AIR HANDLER. SYSTEM SHALL HAVE A TOTAL COOLING CAPICITY OF 18,400 BTUH AND SENSIBLE OF 12,800 BTUH AT ARI CONDITIONS. MINIMUM DRY COIL AIR FLOW SHALL BE 600 CFM. MINIMUM SEER IS 12.6. (1) 1/4 HP INDOOR FAN FLA-1.5 208V/1ø/60HZ. APPROXIMATE WEIGHT = 140 LBS. <br> OUTDOOR UNIT - MODEL NUMBER 2TTR2018A1000A CONDENSING UNIT. SYSTEM SHALL HAVE A COOLING CAPICITY OF 18,200 BTUH AND SENSIBLE OF 13,800 BTUH AT ARI CONDITIONS. MINIMUM EER/SEER IS 11.6/11.0. ELECTRICAL: FAN-1/15 HP, 0.6 FLA, COMPRESSOR-7.2 RLA, UNIT 10.0 MCA 15 MOCP, 208V/1ø/60Hz. APPROXIMATE WEIGHT = 200 LBS. <br> PROVIDE SYSTEM WITH MANUFACTURER'S REFRIGERANT PIPE PACKAGE. |
| CT 1 | COOLING TOWER: "EVAPCO" OR APPROVED TO PROVIDE 290 TONS OF COOLING-90°/80°/70° F WB, 10 HP - 460V-3ø ABB ACH400 VFD, 870 GPM, 3 WAY CONTROL VALVE, "EVAPCO" AT 19-214, SOLD WATER MAKEUP ± 16 GPM, STAINLESS STEEL SUMP, LADDER, RAILED PLATFORM, INVERTED DUTY MOTOR, PROVIDE BREAKOUT PRICING FOR LOW SOUND LEVEL FAN AND "DOLPHIN" SYSTEM. <br> OPERATING WEIGHT-11,000 LBS <br> INSTALL ON STRUCTURAL STEEL UNDERFLANGE BEAMS SIZED FOR PROPER DEFLECTION. SUPPORT ON CONCRETE PIERS TO ALL 48" BETWEEN MECHANICAL ROOM FLOOR LEVEL AND BOTTOM OF SUMP. PROVIDE SEISMIC SUPPORT. PROVIDE NON-POTABLE MAKEUP WATER AND PURGE EQUIPMENT. PROVIDE SANITARY AREA DRAIN WITH TOP 4" ABOVE FINISHED GRADE. |
| AS 1 | AIR SEPARATOR: "SPIROVENT", MODEL HV HIGH VELOCITY MICROBUBBLE SPARATOR. UNIT SHALL BE 8". APPROXIMATE UNIT WEIGHT = 335 LBS. |
| ET 1 | EXPANSION TANK: "WESSEL", MODEL FXA-800, 211 TANK VOLUME, 36"ø TANK, 63" TALL, 2" INLET. APPROXIMATE OPPERATING WEIGHT = 2,400 LBS. |
| RM 1 | REFRIGERANT MONITOR: PROVIDE REFRIGERANT GAS LEAK MONITOR WITH MONITOR MOUNTED HORN AND BLUE STROBE COMPLETE WITH AUXILIARY EXTERIOR REMOTE HORN AND BLUE STROBE. MONITOR TO BE YOKOGAWA MODEL HGM300 OR EQUAL WITH A MINIMUM OF 3 REMOTE SENSORS. MONITOR SHALL BE REFRIGERANT SPECIFIC, SINGLE GAS SENSING, R-123 REFRIGERANT TYPE, HUMAN INTERFACE, WALL MOUNTED. <br> IN ADDITION TO THE SPECIFICATION PROVIDE AND DO THE FOLLOWING, VERIFY REFRIGERATION MACHINERY ROOM AMBIENT SOUND LEVELS AND PROVIDE ALARM SIGNALING DEVICES WITH 15 dBA OR MORE ABOVE OPERATING AMBIENT. <br> REFRIERANT MONITOR TO ALARM TO BUILDING MANAGEMENT SYSTEM. |

# INLET SCHEDULE

| INLET DESIGNATION | AIRFLOWS CFM RANGE | INLET SIZE |
|---|---|---|
| A | 0-250 | 12x12 |
| B | 251-565 | 18x18 |
| C | 566-840 | 22x22 |

1. AIR BALANCE ALL OPEN AREAS AND INDIVIDUAL ROOMS FOR EQUAL PRESSURE CONDITIONS.

# TRANSFER AIR OPENING NOTES

| SYMBOL | SIZE (WIDTH"xHEIGHT") | MAXIMUM TRANSFER AIR (CFM) |
|---|---|---|
| D | 14x10 | 250 |
| E | 14x18 | 450 |

1. PROVIDE OPENING IN WALL ABOVE CEILING TO ALLOW TRANSFER OF PLENUM RETURN AIR. OPENINGS SHALL BE ABOVE CEILINGS AT ALL LOCATIONS MARKED WITH A ACCORDING TO THE SCHEDULE BELOW. LOCATE OPENINGS AT HIGHEST ELEVATION POSSIBLE. ALL OPENINGS SHALL BE FINISHED WITH GYP. BOARD.

# AIR CONDITIONING LEGEND

| Symbol | Description |
|---|---|
| | RETURN OR EXHAUST AIR DUCT |
| | SUPPLY AIR DUCT |
| HEX | HOOD EXHAUST AIR VALVE-PHEONIX CONTROLS |
| GEX | GENERAL EXHAUST AIR VALVE-PHEONIX CONTROLS |
| SUP | SUPPLY AIR VALVE-PHEONIX CONTROLS |
| | FLEXIBLE CONNECTION |
| HWS | HEATING HOT WATER SUPPLY |
| HWR | HEATING HOT WATER RETURN |
| BLV. | BALL VALVE |
| BV. | BALANCE VALVE |
| CKV. | CHECK VALVE |
| LH.GC. | LEVER HANDLE GAS COCK |
| | THERMOMETER, PRESSURE GAUGE |
| | OUTSIDE AIR INTO LOUVER |
| | RETURN OR EXHAUST AIR INTO REGISTER |
| | SUPPLY AIR FROM REGISTER |
| | OUTSIDE AIR DUCT SECTION |
| | RETURN OR EXHAUST AIR DUCT SECTION |
| | SUPPLY AIR DUCT SECTION |
| 12 x 10 | DUCT (FIRST FIGURE SIDE SHOWN SECOND FIGURE SIDE NOT SHOWN) |
| | TURNING VANES |
| | FLEXIBLE DUCTWORK |
| VCD | VOLUME CONTROL DAMPER |
| R, D | RISE OR DROP IN DIRECTION OF ARROW |
| T | ROOM THERMOSTAT |
| Ø | DIAMETER |
| AC | AIR CONDITIONING |
| AD, AP | ACCESS DOOR, ACCESS PANEL |
| CC | CENTER TO CENTER |
| CFM,f | CUBIC FEET OF AIR PER MINUTE |
| E | EXTRACTOR |
| B | BREAKGLASS (FOR REFRIGERANT MONITOR) |
| EAD ,OAD ,RAD | EXHAUST AIR, OUTSIDE AIR, & RETURN AIR DAMPER |
| EF | EXHAUST FAN |
| °F | DEGREES FAHRENHEIT |
| FD / CSFD | FIRE DAMPER / COMBINATION SMOKE FIRE DAMPER |
| GA. | GAUGE |
| GALV. | GALVANIZED |
| AAV. / MAV. | AUTOMATIC / MANUAL AIR VENT |
| MAX., MIN. | MAXIMUM, MINIMUM |
| M.D. | MANUAL DAMPER |
| P.D. | PITCH DOWN IN DIRECTION OF ARROW |
| PRV. | PRESSURE REDUCING VALVE |
| RA, EA. | RETURN AIR, EXHAUST AIR |
| SA, OA. | SUPPLY AIR, OUTSIDE AIR |
| T.C.V. | TEMPERATURE CONTROL VALVE |
| T.C.P. | TEMPERATURE CONTROL PANEL |
| TYP. | TYPICAL |
| UCD | UNDERCUT DOOR |
| RD. | ROOF DRAIN |
| ROOMNAME -- | ROOM NAME & NUMBER |

# PUMP SCHEDULE

| SYMBOL | MANUFACTURER MODEL & SIZE | SERVICE | GPM | TDH FT. of H2O | MOTOR DATA HP | BHP | VOLT | PHASE | RPM | WEIGHT LBS. | REMARKS |
|---|---|---|---|---|---|---|---|---|---|---|---|
| CHWP 1 | B&G MODEL 1510 - 4E | CONDENSER WATER | 580 | 90 | 20 | 18 | 460 | 3 | 1750 | 740 | PROVIDE WITH ABB ACH400 VFD AND MANUAL BYPASS |
| CWP 1 | B&G MODEL 1510 - 5BC | CHILLED WATER | 800 | 50 | 15 | 12.5 | 460 | 3 | 1750 | 680 | PROVIDE WITH ABB ACH400 VFD AND MANUAL BYPASS |

NOTES:

# GENERAL NOTES

1. BRANCH DUCT SIZES TO INDIVIDUAL VAV BOXES SHALL BE THE INLET SIZE OF THE BOX UNLESS NOTED OTHERWISE.
2. PAINT ALL EXPOSED DUCTWORK, COLOR AS SELECTED BY ARCHITECT. DO NOT PAINT EXTERNALLY INSULATED DUCT SYSTEMS.
3. HYDRONIC HOT WATER PIPING TO INDIVIDUAL VAV BOXES SHALL BE 3/4" UNLESS NOTED OTHERWISE.
4. PROVIDE FIRE STOPPING ASSEMBLY PROTECTION FOR DUCT AND PIPE PENETRATIONS OF RATED ASSEMBLIES. FIRE STOP RATING SHALL MATCH RATED ASSEMBLY BEING PENETRATED.
5. PROVIDE EXHAUST DUCT TRANSITION TO FUME HOOD OUTLET SIZE, AS REQUIRED, AT CONNECTION TO FUME HOOD.
6. REFER TO STRUCTURAL DRAWINGS, S1.1 FOR SEISMIC DESIGN REQUIREMENTS.

# EXHAUST FAN SCHEDULE

| SYMBOL | MANUFACTURER AND MODEL | MODEL NUMBER | CAPACITY CFM | ESP "WC | BHP | RPM | ELECTRICAL HP | VOLT | PH. | UNIT WEIGHT (LBS.) | COMMENTS / NOTES |
|---|---|---|---|---|---|---|---|---|---|---|---|
| EF 1 | M.K. PLASTICS | AXIJET 3650 | 14,000 | 3.5 | 11.8 | 976 | 15 | 460 | 3 | 4000 | SEE NOTE 1. |
| EF 2 | M.K. PLASTICS | AXIJET 3650 | 14,000 | 3.5 | 11.8 | 976 | 15 | 460 | 3 | 4000 | SEE NOTE 1. |
| EF 3 | M.K. PLASTICS | AXIJET 3650 | 14,000 | 3.5 | 11.8 | 976 | 15 | 460 | 3 | 4000 | SEE NOTE 1. |
| EF 4 | GREENHECK | SWB-222-30 | 6,530 | 1.25 | 2.55 | 1,240 | 3 | 460 | 3 | 500 | GENERAL EXHAUST FAN - UTILITY SET |
| EF 5 | GREENHECK | CUBE-161HP-10 | 2,155 | 1.25 | 0.86 | 1,594 | 1 | 460 | 3 | 75 | BATHROOM EXHAUST FAN |
| EF 6 | GREENHECK | CW-085-D | 320 | 0.25 | 0.03 | 1550 | 1/20 | 120 | 1 | 40 | PROVIDE WITH MANUFACTURER WALL GRILLE AND SPEED CONTROLLER |
| EF 7 | GREENHECK | CUBE-180HP-20 | 3,750 | 1.25 | 1.68 | 1725 | 2 | 460 | 3 | 130 | SEE NOTE 2. |
| EF 8 | GREENHECK | CUE-095-D | 450 | 0.5 | 0.09 | 1,422 | 1/8 | 120 | 1 | 40 | CHEMICAL WASTE STORAGE ROOM EXHAUST FAN, SEE NOTE 3. |

NOTES:

1. LAB EXHAUST FAN - UTILITY FAN. TRIPLE FAN ASSEMBLY WITH TWO VFD'S AND AUTO LEAD/LAG CONTROLS. ASSEMBLY TO PROVIDE 28,000 CFM TOTAL EXHAUST CAPACITY WITH (2) FANS DELIVERING 14,000 CFM EACH. FAN MINIMUMS SHALL BE 6900 CFM EACH WITH (2) FANS DELIVERING 13,800 CFM TOTAL AT MINIMUM SETTINGS. PROVIDE (I) EPOXY COATED INLET PLENUM WITH OSA INLET, FRONT AND SIDE EXHAUST INLET AND MOTORIZED DAMPERS. LOUVERED RAIN GUARD.
2. CHILLER ROOM EXHAUST FAN - PROVIDE WITH VFD. FAN TO PROVIDE GENERAL VENTILATION OF 800 CFM AND IS TO RAMP UP AS REQUIRED BY A T-STAT TO MAINTAIN 96°f MAX (ADJ.) SPACE TEMPERATURE. ALSO, INTERCONNECT FAN TO REFRIGERANT MONITOR, ON ALARM FROM THE REFRIGERANT MONITOR SYSTEM THE FAN IS TO OVERRIDE ALL OTHER FUNCTIONS AND START, THE PURGE CYCLE EXHAUST FLOW OF 3,750 CFM. PURGE CONDITIONS ARE TO REMAIN UNTIL MANUALLY RESET.
3. EF/8 TO BE PROVIDED WITH THE FOLLOWING OPTIONS: UL/cUL 705, MOTOR W/ THERMAL OVERLOADS, SOLID STATE SPPED CONTROL, AND ROOF CURB. FAN TO ALSO BE COATED WITH HI-PRO POLYESTER - IVORY, COAT ENTIRE FAN AND FACTORY ATTACHED ACCESSORIES.

# REHEAT COIL SCHEDULE

| SYMBOL | MANUFACTURER & MODEL | CFM | MIN. ROW/ FPI | EAT °F | LAT °F | MINIMUM CAPACITY MBH. | GPM | EWT °F | LWT °F | MAXIMUM AIR P.D. IN. WC. | BRANCH PIPE HWS | BRANCH PIPE HWR | TCV. SIZE | TCV. CV. |
|---|---|---|---|---|---|---|---|---|---|---|---|---|---|---|
| RHC 2.8 | TEMTROL REHEAT COIL MODEL: Z-8-A-2-B SIZE: 18x21 | 1680 | 2/8 | 55 | 92.8 | 68.95 | 3.2 | 180 | 135.6 | 0.24 | 3/4" | 3/4" | 1/2" | 1.9 |
| RHC 2.9 | TEMTROL REHEAT COIL MODEL: Z-8-A-2-B SIZE: 18x21 | 1770 | 2/8 | 55 | 91.6 | 70.32 | 3.2 | 180 | 134.7 | 0.26 | 3/4" | 3/4" | 1/2" | 1.9 |
| RHC 2.11 | TEMTROL REHEAT COIL MODEL: Z-8-A-2-B SIZE: 18x21 | 1650 | 2/8 | 55 | 92.9 | 67.9 | 3.1 | 180 | 134.8 | 0.23 | 3/4" | 3/4" | 1/2" | 1.9 |
| RHC 2.12 | TEMTROL REHEAT COIL MODEL: Z-8-A-2-A SIZE: 12x15 | 750 | 2/8 | 55 | 96.4 | 33.64 | 1.9 | 180 | 143.5 | 0.22 | 3/4" | 3/4" | 1/2" | 1.2 |
| RHC 2.21 | TEMTROL REHEAT COIL MODEL: Z-8-A-2-B SIZE: 18x18 | 1520 | 2/8 | 55 | 92.0 | 60.92 | 3.0 | 180 | 138.1 | 0.26 | 3/4" | 3/4" | 1/2" | 1.9 |
| RHC 2.22A | TEMTROL REHEAT COIL MDL: SWC-16-24x24x2-7 AL SIZE: 18x48 | 2600 | 2/7 | 55 | 93.0 | 107.22 | 5.5 | 180 | 140.2 | 0.22 | 1-1/4" | 1-1/4" | 3/4" | 4.7 |
| RHC 2.22B | TEMTROL REHEAT COIL MDL: SWC-16-24x24x2-7 AL SIZE: 18x48 | 2600 | 2/7 | 55 | 93.0 | 107.22 | 5.5 | 180 | 140.2 | 0.22 | 1-1/4" | 1-1/4" | 3/4" | 4.7 |
| RHC 2.22C | TEMTROL REHEAT COIL MDL: SWC-16-24x24x2-7 AL SIZE: 18x48 | 2600 | 2/7 | 55 | 93.0 | 107.22 | 5.5 | 180 | 140.2 | 0.22 | 1-1/4" | 1-1/4" | 3/4" | 4.7 |
| RHC 2.22D | TEMTROL REHEAT COIL MDL: SWC-16-24x24x2-7 AL SIZE: 18x48 | 2600 | 2/7 | 55 | 93.0 | 107.22 | 5.5 | 180 | 140.2 | 0.22 | 1-1/4" | 1-1/4" | 3/4" | 4.7 |
| RHC 2.27 | TEMTROL REHEAT COIL MODEL: Z-8-A-2-G SIZE: 18x45 | 3640 | 2/8 | 55 | 91.4 | 143.64 | 6.9 | 180 | 137.1 | 0.24 | 1-1/4" | 1-1/4" | 3/4" | 4.7 |

NOTES:

1. TRANSITION AS NECESSARY FROM DUCT SIZE SHOWN ON PLANS TO COIL SIZE.
2. PROVIDE ACCESS DOORS UPSTREAM OF ALL REHEAT COILS.
3. ALL BRANCH PIPES TO RHCs SHALL BE 3/4" UNLESS OTHERWISE NOTED.
4. TCVs BASED ON BELIMO B SERIES VALVES.

# AIR FILTER SCHEDULE

| SYSTEM | ASHRAE EFF% | MAX. P.D. IN. WC INITIAL | MAX. P.D. IN. WC FINAL | REMARKS |
|---|---|---|---|---|
| AC 1 | 30% | .15 | 1.0 | PRE-FILTERS |
| | 85% | .68 | 1.5 | SECONDARY FILTERS |
| AHU 2 | 30% | .15 | 1.0 | PRE-FILTERS |
| | 85% | .68 | 1.5 | SECONDARY FILTERS |
| AHU 3 | 30% | .15 | 1.0 | PRE-FILTERS |
| | 85% | .68 | 1.5 | SECONDARY FILTERS |

NOTES:

1. PROVIDE "DWYER" 250-AF FILTER GAUGE AT ALL FILTER BANKS, FACTORY MOUNTED ON AHU'S.
2. QUANTITIES AND SIZES AS REQUIRED.
3. PROVIDE SUFFICIENT SPARE FILTERS FOR 3 COMPLETE CHANGE OUTS.

# AIR HANDLER SCHEDULE

FAN DATA

| SYMBOL | MANUFACTURER MODEL & SIZE | SUPPLY AIR CFM | SUPPLY FAN SIZE | SUPPLY E.S.P. | SUPPLY H.P. | SUPPLY VOLT | SUPPLY PHASE | SUPPLY RPM | RETURN AIR CFM | RETURN FAN SIZE | RETURN E.S.P. | RETURN H.P. | RETURN VOLT | RETURN PHASE | RETURN RPM |
|---|---|---|---|---|---|---|---|---|---|---|---|---|---|---|---|
| AHU 2 | ENERGY LABS OUTDOOR ROOFTOP | 59,850 | 542 | 2" | (2)40 | 460 | 3 | 900 | 21,350 | 445 | 1.5" | 15 | 460 | 3 | 1800 |
| AHU 3 | ENERGY LABS OUTDOOR ROOFTOP | 20,100 | 365 | 2" | 25 | 460 | 3 | 1200 | 18,060 | 365 | 1.5" | 10 | 460 | 3 | 900 |

COOLING COIL DATA

| SYMBOL | CAPACITY MBH TC | CAPACITY MBH SC | GPM AVAILABLE | CFM | MIN. FACE AREA FT² | EADB | EAWB | LADB | LAWB | EWT | LWT | ROWS / FPI | MAX. AIR P.D. IN. W.C. | MAX. WATER P.D. - FT. |
|---|---|---|---|---|---|---|---|---|---|---|---|---|---|---|
| AHU 2 | 2,581.4 | 2,438.1 | 429.9 | 59,850 | 120.3 | 89.51°F | 66.0°F | 51.79°F | 51.31°F | 45°F | 57°F | 6/6 | 0.80 | 7.99 |
| AHU 3 | 783.4 | 608.2 | 130.5 | 20,100 | 47.7 | 81.26°F | 66.0°F | 53.24°F | 53.01°F | 45°F | 57°F | 6/6 | 0.64 | 7.43 |

PRE-HEAT COIL DATA

| SYMBOL | MBH | GPM AVAILABLE | MIN. FACE AREA FT | EADB | EWT | LWT | ROWS / FPI | MAX. AIR P.D. IN. W.C. | MAX. WATER P.D. - FT. | MIN. O.A. CFM | APPROX. OPERATING WEIGHT (LBS.) | REMARKS |
|---|---|---|---|---|---|---|---|---|---|---|---|---|
| AHU 2 | 972.1 | 32.3 | 120.3 | 44.91F | 180°F | 120°F | 1/6 | 0.08 | 2.19 | 38,510 | 37,300 | SEE FILTER SCHEDULE SEE NOTE 4. |
| AHU 3 | 329.3 | 11.2 | 47.7 | 60 °F | 180°F | 120°F | 1/6 | 0.06 | 1.6 | 5,030 | 18,500 | SEE FILTER SCHEDULE |

NOTES:

1. ALL UNITS SELECTIONS BASED ON 70 FT. ELEVATION.
2. ALL UNITS SHALL BE PROVIDED WITH SMOKE DETECTORS THAT SHALL SHUT THE AIR CONDITIONING UNIT DOWN UPON DETECTION OF SMOKE PER CMC 609. COORDINATE WITH FIRE ALARM ON ELECTRICAL DRAWINGS.
3. EACH UNIT SHALL BE WIRED FOR A SINGLE 120V/1ø/60Hz. POINT OF CONNECTION AND A SINGLE 460V/3ø/60Hz CONNECTION. UNITS SHALL BE PROVIDED WITH A ELECTRICAL CONVIENANCE OUTLET AND A 120V POWER CONNECTION WITHIN CONTROLS CABINET.
4. PROVIDE ONE VFD RATED AT 100 HP TOTAL TO CONTROL BOTH 40 HP MOTORS AT AHU-2 SUPPLY FAN.
5. PROVIDE ALL UNITS WITH PREMIUM EFFICENCY FANS.

Added note "Provide all units with premium efficiency fans" to AIR HANDLER SCHEDULE. Changed supply fan for AHU-2 from one fan at 75 HP to two fans at 40 HP. Added note to "Provide one 100 HP VFD to control both 40 HP motors at AHU-2 supply fan." ADDENDUM No. 1

Modified return fan of AHU-2 to 15 HP.

Added reference to new note 4 in "REMARKS" column.

# AIR CONDITIONING UNIT SCHEDULE

FAN DATA

| SYMBOL | MANUFACTURER MODEL & SIZE | SUPPLY AIR CFM | SUPPLY FAN SIZE | SUPPLY E.S.P. | SUPPLY H.P. | SUPPLY VOLT | SUPPLY PHASE | SUPPLY RPM | RETURN AIR CFM | RETURN FAN SIZE | RETURN E.S.P. | RETURN H.P. | RETURN VOLT | RETURN PHASE | RETURN RPM |
|---|---|---|---|---|---|---|---|---|---|---|---|---|---|---|---|
| AC 1A | ENERGY LABS OUTDOOR ROOFTOP | 5600 | 182 | 2" | 7.5 | 460 | 3 | 1800 | 5600 | 182 | 1.5" | 7.5 | 460 | 3 | 1800 |

COOLING COIL DATA

| SYMBOL | CAPACITY MBH TC | CAPACITY MBH SC | CFM | EADB | EAWB | LADB | LAWB | MIN. FACE AREA FT² | MAX. AIR P.D. IN. W.C. |
|---|---|---|---|---|---|---|---|---|---|
| AC 1A | 193 | 193 | 5600 | 84.92°F | 64.0°F | 53.1°F | 51.4°F | 13.0 | 0.43 |

HEATING COIL DATA

| SYMBOL | MBH | GPM AVAILABLE | MIN. FACE AREA FT | EADB | EWT | LWT | ROWS / FPI | MAX. AIR P.D. IN. W.C. | MAX. WATER P.D. - FT. | MIN. O.A. CFM | AIR COOLED CONDENSER LOAD (MCA/MOP) | TOTAL UNIT LOAD (MCA/MOP) | APPROX. OPERATING WEIGHT (LBS.) | FILTER QUANT./SIZE |
|---|---|---|---|---|---|---|---|---|---|---|---|---|---|---|
| AC 1A | 229.8 | 11.6 | 13.0 | 56.5°F | 180°F | 140°F | 1/12 | 0.1 | 2.1 | 2400 | 59.4/70 | 45.8/80 | 14,100 | SEE FILTER SCHEDULE |

NOTES:

1. ALL UNITS SELECTIONS BASED ON 70 FT. ELEVATION.
2. ALL UNITS SHALL BE PROVIDED WITH SMOKE DETECTORS THAT SHALL SHUT THE AIR CONDITIONING UNIT DOWN UPON DETECTION OF SMOKE PER CMC 609. COORDINATE WITH FIRE ALARM ON ELECTRICAL DRAWINGS.
3. EACH UNIT SHALL BE WIRED FOR A SINGLE 120V/1ø/60Hz. POINT OF CONNECTION AND A SINGLE 460V/3ø/60Hz CONNECTION. UNITS SHALL BE PROVIDED WITH A ELECTRICAL CONVIENANCE OUTLET AND A 120V POWER CONNECTION WITHIN CONTROLS CABINET.
4. PROVIDE ALL UNITS WITH PREMIUM EFFICENCY FANS.

Added note "Provide all units with premium efficiency fans" to AIR CONDITIONING UNIT SCHEDULE. ADD No. 1

# CHILLER

EVAPORATOR

| SYMBOL | MANUFACTURER MODEL & SIZE | TONS | GPM | EWT °F | LWT °F | MAX PD FT. HD | FOUL | PASSES |
|---|---|---|---|---|---|---|---|---|
| CH 1 | YORK YKBBBDPI-CJF-290 TONS | 290 | 580 | 56 | 44 | 7.9 | 0.00010 | 2 |

CONDENSER, MOTOR DATA AND ELECTRICAL

| SYMBOL | CONDENSER GPM | EWT °F | LWT °F | MAX PD FT. HD | FOUL | PASSES | MOTOR DATA KW | VOLT | PHASE | MCA | LRA | FLA | MAX FUSE/ BREAKER (AMPS) | REFRIGERANT |
|---|---|---|---|---|---|---|---|---|---|---|---|---|---|---|
| CH 1 | 800 | 80 | 90 | 10.4 | 0.00025 | 2 | 151 | 460 | 3 | 273 | 1950 | 219 | 450 | 123 [illegible] LBS |

NOTES: 1. ALL UNITS SELECTIONS BASED ON 0 FT. ELEVATION.
2. OPER. WT: 17925 LBS

tBP architecture planning interiors management

tBP/Architecture
1000 Burnett Avenue, Suite 140
Concord, CA 94520
p: 925.246.6419 f: 925.246.6495

architect

AINSWORTH ASSOCIATES
MECHANICAL ENGINEERS
SACRAMENTO, CA

consultant

name
address
city, state, zip
ph: fx:

agency

SCIENCE BUILDING
LOS MEDANOS COLLEGE
Contra Costa Community College District

owner

tBP project number : 2024.00
file name:
drawn by: checked by:
date: NOVEMBER 15, 2004
Rev. date: description:

drawing title:
LEGENDS, SCHEDULES, EQUIPMENT LISTS, & NOTES
LMC SCIENCE 313-023-112.01-0-00.00
drawing no.: M0.1
drawing of ?

# VAV BOX WEIGHT SCHEDULE

| INLET SIZE | WEIGHT |
|---|---|
| 5"ø & 6"ø | 45 LBS. |
| 7"ø & 8"ø | 49 LBS. |
| 10"ø | 59 LBS. |
| 12"ø | 71 LBS. |
| 14"ø | 79 LBS. |
| 16"ø | 96 LBS. |
| 24"ø | 144 LBS. |

NOTE: 1. WEIGHT INCLUDES TERMINAL BOX WITH ATTENUATOR SECTION AND WET COIL.

# VARIABLE AIR VOLUME BOX SCHEDULE

| SYMBOL | MANUFACTURER AND MODEL | MAX. CFM | MIN. CFM | AIR S.P. LOSS (MIN.) | REHEAT COIL DATA CFM | ROWS | MBH | AIR EAT | AIR LAT | AIR PD. IN. | WATER GPM | WATER EWT | WATER LWT | WATER PD. FT. | TCV SIZE | TCV CV | REMARKS |
|---|---|---|---|---|---|---|---|---|---|---|---|---|---|---|---|---|---|
| VAV 3.30 | GREENHECK MODEL DESV SIZE 09 | 735 | 300 | 0.14 | 300 | 1 | 11.4 | 55 | 90 | 0.11 | 0.80 | 180 | 149.6 | 0.10 | 1/2 | 0.8 | |
| VAV 3.31 | GREENHECK MODEL DESV SIZE 09 | 735 | 300 | 0.14 | 300 | 1 | 11.4 | 55 | 90 | 0.11 | 0.80 | 180 | 149.6 | 0.10 | 1/2 | 0.8 | |
| VAV 2.1 | GREENHECK MODEL DESV SIZE 07 | 475 | 240 | 0.17 | 240 | 1 | 9.30 | 55 | 91 | 0.1 | 0.70 | 180 | 155 | 0.4 | 1/2 | 0.8 | |
| VAV 2.2 | GREENHECK MODEL DESV SIZE 12 | 1,550 | 915 | 0.23 | 915 | 1 | 21.30 | 55 | 77 | 0.23 | 1.00 | 180 | 137.3 | 0.3 | 1/2 | 0.8 | |
| CAV 2.3 | GREENHECK MODEL DESV SIZE 10 | 1020 | 1020 | 0.19 | 1020 | 1 | 18.9 | 55 | 72 | 0.19 | 1.00 | 180 | 142.2 | 0.20 | 1/2 | 0.8 | |
| VAV 2.4 | GREENHECK MODEL DESV SIZE 12 | 2,585 | 775 | 0.21 | 775 | 1 | 18.50 | 55 | 83 | 0.21 | 1.00 | 180 | 143.0 | 0.3 | 1/2 | 0.8 | |
| VAV 2.5 | GREENHECK MODEL DESV SIZE 14 | 1,995 | 600 | 0.22 | 600 | 1 | 19.20 | 55 | 58 | 0.18 | 0.40 | 180 | 83.9 | 0 | 1/2 | 0.8 | |
| VAV 2.6 | GREENHECK MODEL DESV SIZE 14 | 1,910 | 575 | 0.20 | 575 | 1 | 15.90 | 55 | 81 | 0.17 | 0.50 | 180 | 116.4 | 0 | 1/2 | 0.8 | |
| VAV 2.7 | GREENHECK MODEL DESV SIZE 14 | 1,910 | 575 | 0.20 | 575 | 1 | 15.90 | 55 | 81 | 0.17 | 0.50 | 180 | 116.4 | 0 | 1/2 | 0.8 | |
| VAV 2.10 | GREENHECK MODEL DESV SIZE 08 | 640 | 300 | 0.18 | 300 | 1 | 10.20 | 55 | 87 | 0.16 | 0.80 | 180 | 154.5 | 0.5 | 1/2 | 0.8 | |
| VAV 2.13 | GREENHECK MODEL DESV SIZE 05 | 230 | 115 | 0.07 | 115 | 1 | 5.20 | 55 | 97 | 0.04 | 0.40 | 180 | 150.1 | 0.1 | 1/2 | 0.8 | |
| VAV 2.14 | GREENHECK MODEL DESV SIZE 05 | 280 | 140 | 0.10 | 140 | 1 | 5.80 | 55 | 93 | 0.06 | .040 | 180 | 151.2 | 0.1 | 1/2 | 0.8 | |
| VAV 2.15 | GREENHECK MODEL DESV SIZE 06 | 345 | 175 | 0.19 | 175 | 1 | 6.20 | 55 | 96 | 0.09 | 0.60 | 180 | 157.5 | 0.2 | 1/2 | 0.8 | |
| VAV 2.16 | GREENHECK MODEL DESV SIZE 04 | 165 | 85 | 0.08 | 85 | 1 | 4.70 | 55 | 106 | 0.02 | 0.40 | 180 | 153.8 | 0.1 | 1/2 | 0.8 | |
| VAV 2.17 | GREENHECK MODEL DESV SIZE 07 | 430 | 215 | 0.14 | 215 | 1 | 9.00 | 55 | 94 | 0.08 | 0.80 | 180 | 156.7 | 0.5 | 1/2 | 0.8 | |
| VAV 2.18 | GREENHECK MODEL DESV SIZE 07 | 420 | 210 | 0.14 | 210 | 1 | 7.00 | 55 | 86 | 0.08 | 0.30 | 180 | 133.4 | 0.1 | 1/2 | 0.8 | |
| VAV 2.19 | GREENHECK MODEL DESV SIZE 09 | 740 | 370 | 0.14 | 370 | 1 | 13.4 | 55 | 85 | 0.11 | 1.0 | 180 | 151.8 | 0.2 | 1/2 | 0.8 | |
| VAV 2.20 | GREENHECK MODEL DESV SIZE 04 | 125 | 65 | 0.05 | 65 | 1 | 4.20 | 55 | 115 | 0.01 | 0.40 | 180 | 155.9 | 0.1 | 1/2 | 0.8 | |
| VAV 2.23 | GREENHECK MODEL DESV SIZE 08 | 665 | 300 | 0.19 | 300 | 1 | 10.3 | 55 | 89 | 0.17 | 1.0 | 180 | 158.5 | 0.7 | 1/2 | 0.8 | |
| VAV 2.24 | GREENHECK MODEL DESV SIZE 14 | 2,065 | 620 | 0.23 | 620 | 1 | 19.80 | 55 | 85 | 0.19 | 0.80 | 180 | 130.6 | 0.1 | 1/2 | 0.8 | |
| VAV 2.25 | GREENHECK MODEL DESV SIZE 14 | 2,220 | 665 | 0.26 | 665 | 1 | 25.90 | 55 | 91 | 0.22 | 1.90 | 180 | 152.9 | 0.4 | 1/2 | 1.2 | |
| VAV 2.26 | GREENHECK MODEL DESV SIZE 14 | 1,825 | 700 | 0.18 | 700 | 1 | 26.80 | 55 | 91 | 0.15 | 2.10 | 180 | 154.4 | 0.5 | 1/2 | 1.2 | |
| VAV 2.28 | GREENHECK MODEL DESV SIZE 05 | 265 | 135 | 0.09 | 135 | 1 | 4.60 | 55 | 87 | 0.06 | 0.20 | 180 | 134.0 | 0 | 1/2 | 0.8 | |
| VAV 2.29 | GREENHECK MODEL DESV SIZE 12 | 1,255 | 445 | 0.16 | 445 | 1 | 16.60 | 55 | 89 | 0.16 | 1.00 | 180 | 146.9 | 0.3 | 1/2 | 0.8 | |
| VAV 2.30 | GREENHECK MODEL DESV SIZE 10 | 880 | 440 | 0.15 | 440 | 1 | 15.40 | 55 | 87 | 0.15 | 1.70 | 180 | 161.3 | 0.5 | 1/2 | 1.2 | |
| VAV 2.31 | GREENHECK MODEL DESV SIZE 06 | 290 | 145 | 0.13 | 145 | 1 | 5.40 | 55 | 89 | 0.07 | 0.30 | 180 | 144.1 | 0.1 | 1/2 | 0.8 | |
| VAV 2.32 | GREENHECK MODEL DESV SIZE 05 | 195 | 100 | 0.05 | 100 | 1 | 3.80 | 55 | 90 | 0.03 | 0.20 | 180 | 129.2 | 0 | 1/2 | 0.8 | |
| VAV 2.33 | GREENHECK MODEL DESV SIZE 10 | 980 | 490 | 0.18 | 490 | 1 | 15.70 | 55 | 85 | 0.18 | 1.40 | 180 | 157.6 | 0.4 | 1/2 | 0.8 | |

NOTES:
1. VAV BOXES SHALL HAVE MULTI-POINT SENSORS, INTEGRAL ATTENUATOR, AND STERI-LOC LINING.
2. VAV BOX ENTERING WATER TEMPERATURE SHALL BE 180°F, EXITING TEMPERATURE SHALL BE APPROXIMATELY 140°F.
3. ALL REHEAT COILS SHALL HAVE 2-WAY TEMPERATURE CONTROL VALVES.
4. TRANSITION BRANCH DUCT TO VAV BOXES TO BOX INLET SIZE.
5. TCVs BASED ON BELIMO B SERIES VALVES.

| SYMBOL | MANUFACTURER AND MODEL | MAX. CFM | MIN. CFM | AIR S.P. LOSS (MIN.) | REHEAT COIL DATA CFM | ROWS | MBH | AIR EAT | AIR LAT | AIR PD. IN. | WATER GPM | WATER EWT | WATER LWT | WATER PD. FT. | TCV SIZE | TCV CV | REMARKS |
|---|---|---|---|---|---|---|---|---|---|---|---|---|---|---|---|---|---|
| VAV 3.1 | GREENHECK MODEL DESV SIZE 12 | 1515 | 745 | 0.22 | 745 | 1 | 18.9 | 55 | 95 | 0.22 | 2.1 | 180 | 161.7 | 1.0 | 1/2 | 1.2 | |
| VAV 3.2 | GREENHECK MODEL DESV SIZE 12 | 1,590 | 475 | 0.24 | 475 | 1 | 16.9 | 55 | 88 | 0.24 | 1.00 | 180 | 146.2 | 0.30 | 1/2 | 0.8 | |
| VAV 3.3 | GREENHECK MODEL DESV SIZE 12 | 1590 | 475 | 0.24 | 475 | 1 | 16.9 | 55 | 88 | 0.24 | 1.00 | 180 | 146.2 | 0.30 | 1/2 | 0.8 | |
| VAV 3.4 | GREENHECK MODEL DESV SIZE 05 | 190 | 95 | 0.05 | 95 | 1 | 5.0 | 55 | 104 | 0.03 | 0.40 | 180 | 154.8 | 0.10 | 1/2 | 0.8 | |
| VAV 3.5 | GREENHECK MODEL DESV SIZE 07 | 490 | 245 | 0.18 | 245 | 1 | 9.7 | 55 | 92 | 0.1 | 0.90 | 180 | 158.7 | 0.60 | 1/2 | 0.8 | |
| VAV 3.6 | GREENHECK MODEL DESV SIZE 09 | 740 | 370 | 0.14 | 370 | 1 | 13.4 | 55 | 89 | 0.11 | 1.10 | 180 | 156.4 | 0.30 | 1/2 | 0.8 | |
| VAV 3.7 | GREENHECK MODEL DESV SIZE 04 | 180 | 90 | 0.09 | 90 | 1 | 6.9 | 55 | 62 | 0.03 | 0.20 | 180 | 110.5 | 0.10 | 1/2 | 0.8 | |
| VAV 3.8 | GREENHECK MODEL DESV SIZE 09 | 785 | 435 | 0.16 | 435 | 1 | 13.2 | 55 | 83 | 0.12 | 0.9 | 180 | 148.8 | 0.20 | 1/2 | 0.8 | |
| VAV 3.9 | GREENHECK MODEL DESV SIZE 04 | 180 | 90 | 0.07 | 80 | 1 | 3.9 | 55 | 95 | 0.03 | 0.20 | 180 | 134.3 | 0.10 | 1/2 | 0.8 | |
| VAV 3.10 | GREENHECK MODEL DESV SIZE 05 | 260 | 130 | 0.09 | 130 | 1 | 4.60 | 55 | 87 | 0.06 | 0.20 | 180 | 134.0 | 0 | 1/2 | 0.8 | |
| VAV 3.11 | GREENHECK MODEL DESV SIZE 07 | 425 | 215 | 0.14 | 215 | 1 | 8.9 | 55 | 94 | 0.08 | 0.80 | 180 | 156.2 | 0.40 | 1/2 | 0.8 | |
| VAV 3.12 | GREENHECK MODEL DESV SIZE 07 | 420 | 210 | 0.14 | 210 | 1 | 8.7 | 55 | 93 | 0.08 | 0.70 | 180 | 154.4 | 0.40 | 1/2 | 0.8 | |
| VAV 3.13 | GREENHECK MODEL DESV SIZE 07 | 420 | 210 | 0.14 | 210 | 1 | 8.7 | 55 | 93 | 0.08 | 0.70 | 180 | 154.4 | 0.40 | 1/2 | 0.8 | |
| VAV 3.14 | GREENHECK MODEL DESV SIZE 07 | 475 | 240 | 0.17 | 240 | 1 | 8.9 | 55 | 89 | 0.1 | 0.60 | 180 | 150.5 | 0.30 | 1/2 | 0.8 | |
| VAV 3.15 | GREENHECK MODEL DESV SIZE 10 | 1000 | 445 | 0.35 | 445 | 1 | 24.3 | 55 | 106 | 0.34 | 1.20 | 180 | 139.5 | 0.30 | 1/2 | 0.8 | |
| VAV 3.16 | GREENHECK MODEL DESV SIZE 14 | 1925 | 580 | 0.2 | 580 | 1 | 19.6 | 55 | 106 | 0.17 | 1.5 | 180 | 153.1 | 0.40 | 1/2 | 0.8 | |
| VAV 3.17 | GREENHECK MODEL DESV SIZE 08 | 590 | 295 | 0.15 | 295 | 1 | 11.3 | 55 | 85 | 0.14 | 0.9 | 180 | 155.4 | 0.60 | 1/2 | 0.8 | |
| VAV 3.18 | GREENHECK MODEL DESV SIZE 05 | 150 | 75 | 0.06 | 75 | 1 | 4.2 | 55 | 90 | 0.04 | 0.20 | 180 | 133.4 | 0.10 | 1/2 | 0.8 | |
| VAV 3.19 | GREENHECK MODEL DESV SIZE 06 | 160 | 80 | 0.14 | 80 | 1 | 5.2 | 55 | 87 | 0.07 | 0.30 | 180 | 140.1 | 0.10 | 1/2 | 0.8 | |
| VAV 3.20 | GREENHECK MODEL DESV SIZE 05 | 95 | 50 | 0.08 | 50 | 1 | 5.0 | 55 | 91 | 0.05 | 0.30 | 180 | 141.6 | 0.10 | 1/2 | 0.8 | |
| VAV 3.21 | GREENHECK MODEL DESV SIZE 04 | 120 | 60 | 0.04 | 60 | 1 | 3.9 | 55 | 115 | 0.01 | 0.30 | 180 | 152.2 | 0.10 | 1/2 | 0.8 | |
| VAV 3.22 | GREENHECK MODEL DESV SIZE 04 | 180 | 90 | 0.096 | 90 | 1 | 4.8 | 55 | 105 | 0.03 | 0.40 | 180 | 153.2 | 0.10 | 1/2 | 0.8 | |
| VAV 3.23 | GREENHECK MODEL DESV SIZE 08 | 615 | 305 | 0.17 | 305 | 1 | 13.5 | 55 | 76 | 0.15 | 0.80 | 180 | 146.4 | 0.50 | 1/2 | 0.8 | |
| VAV 3.24 | GREENHECK MODEL DESV SIZE 10 | 850 | 480 | 0.14 | 480 | 1 | 14.6 | 55 | 83 | 0.14 | 1.1 | 180 | 152.4 | 0.20 | 1/2 | 0.8 | |
| VAV 3.25 | GREENHECK MODEL DESV SIZE 05 | 200 | 100 | 0.05 | 100 | 1 | 3.2 | 55 | 84 | 0.03 | 0.10 | 180 | 116.8 | 00.0 | 1/2 | 0.8 | |
| VAV 3.26 | GREENHECK MODEL DESV SIZE 05 | 235 | 120 | 0.07 | 120 | 1 | 5.3 | 55 | 96 | 0.05 | 0.40 | 180 | 149.7 | 0.10 | 1/2 | 0.8 | |
| VAV 3.27 | GREENHECK MODEL DESV SIZE 04 | 175 | 90 | 0.09 | 90 | 1 | 4.9 | 55 | 105 | 0.03 | 0.40 | 180 | 154.3 | 0.10 | 1/2 | 0.8 | |
| VAV 3.28 | GREENHECK MODEL DESV SIZE 07 | 490 | 245 | 0.18 | 245 | 1 | 8.5 | 55 | 87 | 0.1 | 0.50 | 180 | 145.9 | 0.20 | 1/2 | 0.8 | |
| VAV 3.29 | GREENHECK MODEL DESV SIZE 09 | 735 | 300 | 0.14 | 300 | 1 | 11.4 | 55 | 90 | 0.11 | 0.80 | 180 | 149.6 | 0.10 | 1/2 | 0.8 | |

NOTES:
1. VAV BOXES SHALL HAVE MULTI-POINT SENSORS, INTEGRAL ATTENUATOR, AND STERI-LOC LINING.
2. VAV BOX ENTERING WATER TEMPERATURE SHALL BE 180°F, EXITING TEMPERATURE SHALL BE APPROXIMATELY 140°F.
3. ALL REHEAT COILS SHALL HAVE 2-WAY TEMPERATURE CONTROL VALVES.
4. TRANSITION BRANCH DUCT TO VAV BOXES TO BOX INLET SIZE.
5. TCVs BASED ON BELIMO B SERIES VALVES.

# SUPPLY / HOOD / EXHAUST AIR VALVE SCHEDULE

| SYMBOL | MANUFACTURER MODEL & SIZE | MAX. CFM | MIN. CFM | OFFSET CFM | MAX. CLG. CFM | REMARKS |
|---|---|---|---|---|---|---|
| HEX 2.22Q | TRIATEK W112M-304SS-FACT | 800 | 300 | – | – | – |
| HEX 2.22R | TRIATEK W108M-304SS-FACT | 500 | 200 | – | – | – |
| HEX 2.22T | TRIATEK W108M-304SS-FACT | 500 | 200 | – | – | – |
| SUP 2.27 | TRIATEK W312M-H-FACT | 3640 | 1625 | 400 | 3635 | PROVIDE WITH IAC 3L SILENCER |
| GEX 2.27 | TRIATEK W108M-H-FACT | 525 | 35 | – | – | – |
| HEX 2.27A | TRIATEK W112M-304SS-FACT | 800 | 300 | – | – | – |
| HEX 2.27B | TRIATEK W112M-304SS-FACT | 800 | 300 | – | – | – |
| HEX 2.27C | TRIATEK W112M-304SS-FACT | 800 | 300 | – | – | – |
| HEX 2.27D | TRIATEK W112M-304SS-FACT | 800 | 300 | – | – | – |
| HEX 2.27E | TRIATEK W112M-304SS-FACT | 800 | 300 | – | – | – |

NOTES:
1. PROVIDE VALVE SYSTEMS COMPLETE WITH HOOD MONITORS, AND SASH SENSORS
2. HOOD CONTROLS SHALL BE CAPABLE OF TIE-IN WITH DDC ENERGY MANAGEMENT SYSTEM VIA GATEWAY.
3. ALL AIR VALVES SHALL BE PROVIDED WITH TRIATEX DIGITAL CONTROLLERS AND CONNECTED TO THE DDC SYSTEM VIA BACKNET INTERFACE.

# SUPPLY / HOOD / EXHAUST AIR VALVE SCHEDULE

| SYMBOL | MANUFACTURER MODEL & SIZE | MAX. CFM | MIN. CFM | OFFSET CFM | MAX. CLG. CFM | REMARKS |
|---|---|---|---|---|---|---|
| SUP 2.22A | TRIATEK W212M-H-FACT | 2600 | 1200 | 2600 | 2600 | PROVIDE WITH IAC 3L SILENCER |
| SUP 2.22B | TRIATEK W212M-H-FACT | 2600 | 1200 | – | 2600 | PROVIDE WITH IAC 3L SILENCER |
| SUP 2.22C | TRIATEK W212M-H-FACT | 2600 | 1200 | – | 2600 | PROVIDE WITH IAC 3L SILENCER |
| SUP 2.22D | TRIATEK W212M-H-FACT | 2600 | 1200 | – | 2600 | PROVIDE WITH IAC 3L SILENCER |
| HEX 2.22A | TRIATEK W112M-304SS-FACT | 800 | 300 | – | – | – |
| HEX 2.22B | TRIATEK W112M-304SS-FACT | 800 | 300 | – | – | – |
| HEX 2.22C | TRIATEK W112M-304SS-FACT | 800 | 300 | – | – | – |
| HEX 2.22D | TRIATEK W112M-304SS-FACT | 800 | 300 | – | – | – |
| HEX 2.22E | TRIATEK W112M-304SS-FACT | 800 | 300 | – | – | – |
| HEX 2.22F | TRIATEK W112M-304SS-FACT | 800 | 300 | – | – | – |
| HEX 2.22G | TRIATEK W112M-304SS-FACT | 800 | 300 | – | – | – |
| HEX 2.22H | TRIATEK W112M-304SS-FACT | 800 | 300 | – | – | – |
| HEX 2.22J | TRIATEK W112M-304SS-FACT | 800 | 300 | – | – | – |
| HEX 2.22K | TRIATEK W112M-304SS-FACT | 800 | 300 | – | – | – |
| HEX 2.22L | TRIATEK W112M-304SS-FACT | 800 | 300 | – | – | – |
| HEX 2.22M | TRIATEK W112M-304SS-FACT | 800 | 300 | – | – | – |
| HEX 2.22N | TRIATEK W112M-304SS-FACT | 800 | 300 | – | – | – |
| HEX 2.22P | TRIATEK W112M-304SS-FACT | 800 | 300 | – | – | – |

NOTES:
1. PROVIDE VALVE SYSTEMS COMPLETE WITH HOOD MONITORS, AND SASH SENSORS
2. HOOD CONTROLS SHALL BE CAPABLE OF TIE-IN WITH DDC ENERGY MANAGEMENT SYSTEM VIA GATEWAY.
3. ALL AIR VALVES SHALL BE PROVIDED WITH TRIATEX DIGITAL CONTROLLERS AND CONNECTED TO THE DDC SYSTEM VIA BACKNET INTERFACE.

# SUPPLY / HOOD / EXHAUST AIR VALVE SCHEDULE

| SYMBOL | MANUFACTURER MODEL & SIZE | MAX. CFM | MIN. CFM | OFFSET CFM | MAX. CLG. CFM | REMARKS |
|---|---|---|---|---|---|---|
| SUP 2.8 | TRIATEK W212M-H-FACT | 1680 | 1515 | 190 | 1680 | PROVIDE WITH IAC 3L SILENCER |
| GEX 2.8 | TRIATEK W212M-H-FACT | 1570 | 905 | – | – | – |
| HEX 2.8 | TRIATEK W112M-304SS-FACT | 800 | 300 | – | – | – |
| SUP 2.9 | TRIATEK W212M-H-FACT | 1770 | 1550 | 200 | 1770 | PROVIDE WITH IAC 3L SILENCER |
| GEX 2.9 | TRIATEK W212M-H-FACT | 1670 | 950 | – | – | – |
| HEX 2.9 | TRIATEK W112M-304SS-FACT | 800 | 300 | – | – | – |
| SUP 2.11 | TRIATEK W212M-H-FACT | 1650 | 1650 | 185 | 1650 | PROVIDE WITH IAC 3L SILENCER |
| GEX 2.11 | TRIATEK W212M-H-FACT | 1535 | 1035 | – | – | – |
| HEX 2.11 | TRIATEK W112M-304SS-FACT | 800 | 300 | – | – | – |
| SUP 2.12 | TRIATEK W110M-H-FACT | 750 | 540 | 85 | 750 | PROVIDE WITH IAC 3L SILENCER |
| GEX 2.12 | TRIATEK W108M-H-FACT | 535 | 35 | – | – | – |
| HEX 2.12A | TRIATEK W112M-304SS-FACT | 800 | 300 | – | – | – |
| HEX 2.12B | TRIATEK W108M-304SS-FACT | 80 | 80 | – | – | – |
| SUP 2.21 | TRIATEK W212M-H-FACT | 1520 | 715 | 170 | 1520 | PROVIDE WITH IAC 3L SILENCER |
| GEX 2.21 | TRIATEK W112M-H-FACT | 740 | 90 | – | – | – |
| HEX 2.21A | TRIATEK W112M-304SS-FACT | 800 | 300 | – | – | – |
| HEX 2.21B | TRIATEK W112M-304SS-FACT | 800 | 300 | – | – | – |

NOTES:
1. PROVIDE VALVE SYSTEMS COMPLETE WITH HOOD MONITORS, AND SASH SENSORS
2. HOOD CONTROLS SHALL BE CAPABLE OF TIE-IN WITH DDC ENERGY MANAGEMENT SYSTEM VIA GATEWAY.
3. ALL AIR VALVES SHALL BE PROVIDED WITH TRIATEX DIGITAL CONTROLLERS AND CONNECTED TO THE DDC SYSTEM VIA BACKNET INTERFACE.

tBP
architecture planning interiors management
LICENSED ARCHITECT · RICHARD A. MANGINI, AIA · No. C-8865 · REN. 12-31-05 · STATE OF CALIFORNIA
tBP/Architecture
1000 Burnett Avenue, Suite 140
Concord, CA 94520
p: 925.246.6419 f: 925.246.6495
architect

REGISTERED PROFESSIONAL ENGINEER · DAVID A. WESTON · No. M31220 · EXPIRES 12/31/05 · MECHANICAL · STATE OF CALIFORNIA
AINSWORTH ASSOCIATES
MECHANICAL ENGINEERS
SACRAMENTO, CA
JOB: 2003-005
consultant

IDENTIFICATION STAMP
DIV. OF THE STATE ARCHITECT
OFFICE OF REGULATION SERVICES
APPL. #01-105226
AC FLS SS
DATE 1-12-05
name
address
city, state, zip
ph: fx:
agency

SCIENCE BUILDING
LOS MEDANOS COLLEGE
Contra Costa Community College District
owner

tBP project number : 20247.00
file name:
drawn by: checked by:
date: NOVEMBER 15, 2004
Rev: date: description:

drawing title:
LEGENDS, SCHEDULES, EQUIPMENT LISTS, & NOTES
LMC SCIENCE 313-023-112.01-0-00.00
drawing no.:
M0.2
drawing of ?

## PERFORMANCE CERTIFICATE OF COMPLIANCE — Part 1 of 3 — PERF-1

| | |
|---|---|
| PROJECT NAME | SCIENCE BUILDING - LOS MEDANOS COLLEGE |
| DATE | 4/20/2004 |
| PROJECT ADDRESS | 2700 E. LELAND ROAD Pittsburg |
| Building Permit # | |
| PRINCIPAL DESIGNER - ENVELOPE | tBP / Architecture |
| TELEPHONE | 925-246-6419 |
| Checked by/Date | Enforcement Agency Use |
| DOCUMENTATION AUTHOR | Ainsworth Associates Mechanical Engineers |
| TELEPHONE | (916) 737-6014 |

### GENERAL INFORMATION

| DATE OF PLANS | BUILDING CONDITIONED FLOOR AREA | CLIMATE ZONE |
|---|---|---|
| | 46,357 Sq.Ft. | 12 |

BUILDING TYPE: [X] NONRESIDENTIAL [ ] HIGH RISE RESIDENTIAL [ ] HOTEL/MOTEL GUEST ROOM

PHASE OF CONSTRUCTION: [X] NEW CONSTRUCTION [ ] ADDITION [ ] ALTERATION [ ] EXISTING + ADDITION

### STATEMENT OF COMPLIANCE

This Certificate of Compliance lists the building features and performance specifications needed to comply with Title 24, Parts 1 and 6, of the State Building Code. This certificate applies only to a Building using the performance compliance approach.

DOCUMENTATION AUTHOR: David Weston  SIGNATURE  DATE: 11/11/04

The Principal Designers hereby certify that the proposed building design represented in the construction documents and modelled for this permit application are consistent with all other forms and worksheets, specifications, and other calculations submitted with this permit application. The proposed building as designed meets the energy efficiency requirements of the State Building Code, Title 24, Part 6.

ENV. LTG. MECH.

[ ] [ ] [✓] 1. I hereby affirm that I am eligible under the provisions of Division 3 of the Business and Professions Code to sign this document as the person responsible for its preparation; and that I am licensed as a civil engineer, mechanical engineer, electrical engineer or architect.

[ ] [ ] [ ] 2. I affirm that I am eligible under the provisions of Division 3 of the Business and Professions Code Section 5537.2 or 6737.3 to sign this document as the person responsible for its preparation; and that I am a licensed contractor preparing documents for work that I have contracted to perform.

[ ] [ ] [ ] 3. I affirm that I am eligible under Division 3 of the Business and Professions Code to sign this document because it pertains to a structure or type of work described as exempt pusuant to Business and Professions Code Sections 5537, 5538, and 6737.1. (These sections of the Business and Professions Code ae printed in full in the Nonresidential Manual.)

### ENVELOPE COMPLIANCE

Indicate location on plans of Note Block for Mandatory Measures

Required Forms: ENV-1

| PRINCIPAL ENVELOPE DESIGNER - NAME | SIGNATURE | LIC. NO. | DATE |
|---|---|---|---|
| RICHARD A. MANGUM | | C-8685 | 12.14.04 |

### LIGHTING COMPLIANCE

Indicate location on plans of Note Block for Mandatory Measures

Required Forms: Lighting Compliance Not In The Scope Of This Submittal

| PRINCIPAL LIGHTING DESIGNER - NAME | SIGNATURE | LIC. NO. | DATE |
|---|---|---|---|
| | | | |

### MECHANICAL COMPLIANCE

Indicate location on plans of Note Block for Mandatory Measures

Required Forms: MECH-1, MECH-2, MECH-3

| PRINCIPAL MECHANICAL DESIGNER - NAME | SIGNATURE | LIC. NO. | DATE |
|---|---|---|---|
| David H. Weston | | M31220 | 11/11/04 |

Run Initiation Time: 04/20/04 09:36:37 Run Code: 1082478997

EnergyPro 3.1 By EnergySoft User Number: 5891 Job Number: 2003-003 Page: 3 of 38

## PERFORMANCE CERTIFICATE OF COMPLIANCE — Part 2 of 3 — PERF-1

SCIENCE BUILDING - LOS MEDANOS COLLEGE — DATE 4/20/2004

### ANNUAL SOURCE ENERGY USE SUMMARY (kBtu/sqft-yr)

| ENERGY COMPONENT | Standard Design | Proposed Design | Compliance Margin |
|---|---|---|---|
| Space Heating | 33.26 | 34.97 | -1.70 |
| Space Cooling | 60.08 | 30.60 | 29.48 |
| Indoor Fans | 18.17 | 17.51 | 0.66 |
| Heat Rejection | 0.00 | 10.18 | -10.18 |
| Pumps & Misc. | 5.55 | 7.53 | -1.98 |
| Domestic Hot Water | 10.23 | 10.41 | -0.18 |
| Lighting | 42.16 | 42.16 | 0.00 |
| Receptacle | 16.59 | 16.59 | 0.00 |
| Process | 22.82 | 22.82 | 0.00 |
| TOTALS: | 208.85 | 192.76 | 16.09 |

Percent better than Standard: 7.7% ( 8.7% excluding process)

### BUILDING COMPLIES

### GENERAL INFORMATION

| | | | |
|---|---|---|---|
| Building Orientation | (Southeast) 137 deg | Conditioned Floor Area | 46,357 sqft. |
| Number of Stories | 1 | Unconditioned Floor Area | 0 sqft. |
| Number of Systems | 3 | Conditioned Footprint Area | 24,877 sqft. |
| Number of Zones | 67 | | |

| | Orientation | Gross Area | Glazing Area | Glazing Ratio |
|---|---|---|---|---|
| Front Elevation | (Southeast) | 7,425 sqft. | 2,470 sqft. | 33.3% |
| Left Elevation | (Southwest) | 8,570 sqft. | 3,183 sqft. | 37.1% |
| Rear Elevation | (Northwest) | 4,210 sqft. | 1,596 sqft. | 37.9% |
| Right Elevation | (Northeast) | 7,786 sqft. | 3,086 sqft. | 39.6% |
| Total | | 27,991 sqft. | 10,335 sqft. | 36.9% |
| Roof | | 19,585 sqft. | 0 sqft. | 0.0% |

| | Standard | Proposed |
|---|---|---|
| Lighting Power Density | 1.432 W/sqft. | 1.432 W/sqft. |
| Prescriptive Env. Heat Loss | 9,394 Btu/h | 5,740 Btu/h |
| Prescriptive Env. Heat Gain | 957,586 Btu/h-F | 661,693 Btu/h-F |

LEED™ Energy & Atmosphere Credit

Savings vs. Title 24 [1] 9.50%

Energy Performance Credit [2] 1 Points

1. excludes process and receptacle 2. see LEED table 8-c or 8-d

Remarks:

Run Initiation Time: 04/20/04 09:36:37 Run Code: 1082478997

EnergyPro 3.1 By EnergySoft User Number: 5891 Job Number: 2003-003 Page: 4 of 38

## PERFORMANCE CERTIFICATE OF COMPLIANCE — Part 3 of 3 — PERF-1

PROJECT NAME: SCIENCE BUILDING - LOS MEDANOS COLLEGE — DATE 4/20/2004

### ZONE INFORMATION

| System Name | Zone Name | Occupancy Type | Floor Area (sqft.) | Inst. LPD (W/sf) 1 | Port. LPD (W/sf) 1 | Ctrl. Credits (W/sf) 2 | Tailored LPD (W/sf) 3 | Proc. Loads (W/sf) |
|---|---|---|---|---|---|---|---|---|
| AC-1 | Large Tiered Classroom | Classroom | 2,380 | *1.600 | | | | 2.000 |
| AH-2 | VAV2-1 | Lobby (Main Entry & Assembly) | 352 | *1.500 | | | | |
| | VAV2-2 | Corridor/Restroom/Support | 2,040 | *0.600 | | | | |
| | VAV2-3 | Medical/Clinical Care | 1,075 | *1.400 | | | | |
| | VAV2-4 | Classroom | 1,550 | *1.600 | | | | |
| | VAV2-5 | Classroom | 1,025 | *1.600 | | | | 3.390 |
| | VAV2-6 | Classroom | 945 | *1.600 | | | | |
| | VAV2-7 | Classroom | 945 | *1.600 | | | | |
| | SUP2-8 | Classroom | 1,515 | *1.600 | | | | |
| | SUP2-9 | Classroom | 1,550 | *1.600 | | | | |
| | VAV2-10 | Classroom | 725 | *1.600 | | | | |
| | SUP2-11 | Classroom | 1,650 | *1.600 | | | | |
| | SUP2-12 | Classroom | 810 | *1.600 | | | | |
| | VAV2-13 | Office | 90 | *1.300 | | | | |
| | VAV2-14 | Corridor/Restroom/Support | 90 | *0.600 | | | | |
| | VAV2-15 | Office | 140 | *1.300 | | | | |
| | VAV2-16 | Corridor/Restroom/Support | 85 | *0.600 | | | | |
| | VAV2-17 | Corridor/Restroom/Support | 540 | *0.600 | | | | |
| | VAV2-18 | Office | 525 | *1.300 | | | | |
| | VAV2-19 | Office | 1,050 | *1.300 | | | | |

Notes: 1. See LTG-1 (items marked with asterisk, see LTG-2 by others) 2. See LTG-3 3. See LTG-4 — Items above require special documentation

### EXCEPTIONAL CONDITIONS COMPLIANCE CHECKLIST

The local enforcement agency should pay special attention to the items specified in this checklist. These items require special written justification and documentation, and special verification to be used with the performance approach. The local enforcement agency determines the adequacy of the justification, and may reject a building or design that otherwise complies based on the adequacy of the special justification and documentation submitted.

| | Plan | Field |
|---|---|---|
| The HVAC System "AC-1 ENERGY LABS: Premium Eff" 4.15 BHP Supply Fan Motor has been specified. | | |
| The HVAC System "AC-1 ENERGY LABS: Premium Eff" 1.76 BHP Return Fan Motor has been specified. | | |
| The HVAC System "AH-2 ENERGY LABS: Premium Eff" 47.06 BHP Supply Fan Motor has been specified. | | |
| The HVAC System "AH-2 ENERGY LABS: Premium Eff" 8.59 BHP Return Fan Motor has been specified. | | |
| The HVAC System "AH-3 ENERGY LABS: Premium Eff" 13.86 BHP Supply Fan Motor has been specified. | | |
| The HVAC System "AH-3 ENERGY LABS: Premium Eff" 8.22 BHP Return Fan Motor has been specified. | | |
| A Premium Eff 18.00 BHP Chilled Water Pump Motor has been specified. | | |
| A Premium Eff 18.00 BHP Chilled Water Pump Motor has been specified. | | |
| The Chilled Water Pump includes a Variable Speed Drive. | | |
| A Premium Eff 5.00 BHP Hot Water Pump Motor has been specified. | | |
| The Cooling Tower "Evapco 290 Tons: Premium Eff" 10.00 BHP Fan Motor has been specified. | | |

The exceptional features listed in this performance approach application have specifically been reviewed. Adequate written justification and documentation for their use have been provided by the applicant.

Authorized Signature or Stamp ______________________

Run Initiation Time: 04/20/04 09:36:37 Run Code: 1082478997

EnergyPro 3.1 By EnergySoft User Number: 5891 Job Number: 2003-003 Page: 5 of 38

## PERFORMANCE CERTIFICATE OF COMPLIANCE — Part 3 of 3 — PERF-1

PROJECT NAME: SCIENCE BUILDING - LOS MEDANOS COLLEGE — DATE 4/20/2004

### ZONE INFORMATION

| System Name | Zone Name | Occupancy Type | Floor Area (sqft.) | Inst. LPD (W/sf) 1 | Port. LPD (W/sf) 1 | Ctrl. Credits (W/sf) 2 | Tailored LPD (W/sf) 3 | Proc. Loads (W/sf) |
|---|---|---|---|---|---|---|---|---|
| | VAV2-20 | Corridor/Restroom/Support | 100 | *0.600 | | | | |
| | SUP2-21 | Classroom | 1,075 | *1.600 | | | | |
| | SUP2-22A | Classroom | 530 | *1.600 | | | | |
| | SUP2-22B | Classroom | 530 | *1.600 | | | | |
| | SUP2-22C | Classroom | 530 | *1.600 | | | | |
| | CAV2-23 | Classroom | 400 | *1.600 | | | | |
| | VAV2-24 | Classroom | 945 | *1.600 | | | | |
| | VAV2-25 | Classroom | 955 | *1.600 | | | | |
| | VAV2-26 | Classroom | 1,250 | *1.600 | | | | |
| | SUP2-27 | Classroom | 1,625 | *1.600 | | | | |
| | CAV2-28 | Classroom | 190 | *1.600 | | | | |
| | VAV2-29 | Classroom | 1,120 | *1.600 | | | | |
| | VAV2-30 | Classroom | 1,100 | *1.600 | | | | |
| | VAV2-31 | Corridor/Restroom/Support | 100 | *0.600 | | | | |
| | VAV2-32 | Precision Industrial | 245 | *1.500 | | | | |
| | VAV2-33 | Classroom | 1,225 | *1.600 | | | | |
| AH-3 | VAV3-29 | Office | 300 | *1.300 | | | | |
| | VAV3-30 | Office | 300 | *1.300 | | | | |
| | VAV3-31 | Office | 300 | *1.300 | | | | |
| | VAV3-28 | Office | 200 | *1.300 | | | | |

Notes: 1. See LTG-1 (items marked with asterisk, see LTG-2 by others) 2. See LTG-3 3. See LTG-4 — Items above require special documentation

### EXCEPTIONAL CONDITIONS COMPLIANCE CHECKLIST

The local enforcement agency should pay special attention to the items specified in this checklist. These items require special written justification and documentation, and special verification to be used with the performance approach. The local enforcement agency determines the adequacy of the justification, and may reject a building or design that otherwise complies based on the adequacy of the special justification and documentation submitted.

| | Plan | Field |
|---|---|---|
| A Premium Eff 12.50 BHP Condenser Water Pump Motor has been specified. | | |
| The Cooling Tower "250 Ton Tower/25HP" includes a Two Speed Fan. | | |

The exceptional features listed in this performance approach application have specifically been reviewed. Adequate written justification and documentation for their use have been provided by the applicant.

Authorized Signature or Stamp ______________________

Run Initiation Time: 04/20/04 09:36:37 Run Code: 1082478997

EnergyPro 3.1 By EnergySoft User Number: 5891 Job Number: 2003-003 Page: 6 of 38

## PERFORMANCE CERTIFICATE OF COMPLIANCE — Part 3 of 3 — PERF-1

PROJECT NAME: SCIENCE BUILDING - LOS MEDANOS COLLEGE — DATE 4/20/2004

### ZONE INFORMATION

| System Name | Zone Name | Occupancy Type | Floor Area (sqft.) | Inst. LPD (W/sf) 1 | Port. LPD (W/sf) 1 | Ctrl. Credits (W/sf) 2 | Tailored LPD (W/sf) 3 | Proc. Loads (W/sf) |
|---|---|---|---|---|---|---|---|---|
| | VAV3-27 | Office | 100 | *1.300 | | | | |
| | VAV3-26 | Convention/Conference | 260 | *1.500 | | | | 5.820 |
| | VAV3-25 | Classroom | 250 | *1.600 | | | | 5.820 |
| | VAV3-24 | Corridor/Restroom/Support | 550 | *0.600 | | | | 5.820 |
| | VAV3-23 | Corridor/Restroom/Support | 1,205 | *0.600 | | | | 5.820 |
| | VAV3-22 | Convention/Conference | 245 | *1.500 | | | | 5.820 |
| | VAV3-21 | Convention/Conference | 220 | *1.500 | | | | 5.820 |
| | VAV3-20 | Convention/Conference | 125 | *1.500 | | | | 5.820 |
| | VAV3-19 | Convention/Conference | 150 | *1.500 | | | | 5.820 |
| | VAV3-18 | Convention/Conference | 110 | *1.500 | | | | 5.820 |
| | VAV3-17 | Office | 510 | *1.300 | | | | 5.820 |
| | VAV3-16 | Office | 1,255 | *1.300 | | | | 5.820 |
| | VAV3-15 | Office | 1,210 | *1.300 | | | | 5.820 |
| | VAV3-1 | Lobby (Main Entry & Assembly) | 1,865 | *1.500 | | | | 5.820 |
| | VAV3-2 | Classroom | 985 | *1.600 | | | | |
| | VAV3-3 | Classroom | 1,130 | *1.600 | | | | |
| | VAV3-4 | Corridor/Restroom/Support | 125 | *0.600 | | | | |
| | VAV3-5 | Classroom | 315 | *1.600 | | | | |
| | VAV3-6 | Classroom | 925 | *1.600 | | | | 6.980 |
| | VAV3-7 | Corridor/Restroom/Support | 215 | *0.600 | | | | |

Notes: 1. See LTG-1 (items marked with asterisk, see LTG-2 by others) 2. See LTG-3 3. See LTG-4 — Items above require special documentation

### EXCEPTIONAL CONDITIONS COMPLIANCE CHECKLIST

The local enforcement agency should pay special attention to the items specified in this checklist. These items require special written justification and documentation, and special verification to be used with the performance approach. The local enforcement agency determines the adequacy of the justification, and may reject a building or design that otherwise complies based on the adequacy of the special justification and documentation submitted.

| | Plan | Field |
|---|---|---|
| | | |

The exceptional features listed in this performance approach application have specifically been reviewed. Adequate written justification and documentation for their use have been provided by the applicant.

Authorized Signature or Stamp ______________________

Run Initiation Time: 04/20/04 09:36:37 Run Code: 1082478997

EnergyPro 3.1 By EnergySoft User Number: 5891 Job Number: 2003-003 Page: 7 of 38

## PERFORMANCE CERTIFICATE OF COMPLIANCE — Part 3 of 3 — PERF-1

PROJECT NAME: SCIENCE BUILDING - LOS MEDANOS COLLEGE — DATE 4/20/2004

### ZONE INFORMATION

| System Name | Zone Name | Occupancy Type | Floor Area (sqft.) | Inst. LPD (W/sf) 1 | Port. LPD (W/sf) 1 | Ctrl. Credits (W/sf) 2 | Tailored LPD (W/sf) 3 | Proc. Loads (W/sf) |
|---|---|---|---|---|---|---|---|---|
| | VAV3-8 | Classroom | 970 | *1.600 | | | | |
| | VAV3-9 | Classroom | 225 | *1.600 | | | | 6.450 |
| | VAV3-10 | Office | 100 | *1.300 | | | | |
| | VAV3-11 | Office | 300 | *1.300 | | | | |
| | VAV3-12 | Office | 300 | *1.300 | | | | |
| | VAV3-13 | Office | 300 | *1.300 | | | | |
| | VAV3-14 | Office | 310 | *1.300 | | | | |

Notes: 1. See LTG-1 (items marked with asterisk, see LTG-2 by others) 2. See LTG-3 3. See LTG-4 — Items above require special documentation

### EXCEPTIONAL CONDITIONS COMPLIANCE CHECKLIST

The local enforcement agency should pay special attention to the items specified in this checklist. These items require special written justification and documentation, and special verification to be used with the performance approach. The local enforcement agency determines the adequacy of the justification, and may reject a building or design that otherwise complies based on the adequacy of the special justification and documentation submitted.

| | Plan | Field |
|---|---|---|
| | | |

The exceptional features listed in this performance approach application have specifically been reviewed. Adequate written justification and documentation for their use have been provided by the applicant.

Authorized Signature or Stamp ______________________

Run Initiation Time: 04/20/04 09:36:37 Run Code: 1082478997

EnergyPro 3.1 By EnergySoft User Number: 5891 Job Number: 2003-003 Page: 8 of 38

## ENVELOPE COMPLIANCE SUMMARY — Performance — ENV-1

PROJECT NAME: SCIENCE BUILDING - LOS MEDANOS COLLEGE — DATE 4/20/2004

### OPAQUE SURFACES

| # | Surface Type | Framing Type | Area | U-Fac. | Act. Azm. | Tilt | Solar Gains Y/N | Form 3 Reference | Location / Comments |
|---|---|---|---|---|---|---|---|---|---|
| 1 | Roof | None | 0 | 0.021 | 0 | 0 | X | R-30 Roof | Large Tiered Classroom |
| 2 | Wall | Metal | 176 | 0.120 | 333 | 90 | X | Stucco R-19 Metal Stud Wall | Large Tiered Classroom |
| 3 | Wall | Metal | 32 | 0.120 | 63 | 90 | X | Stucco R-19 Metal Stud Wall | Large Tiered Classroom |
| 4 | Wall | Metal | 144 | 0.120 | 243 | 90 | X | Stucco R-19 Metal Stud Wall | Large Tiered Classroom |
| 5 | Wall | Metal | 255 | 0.120 | 153 | 90 | X | Stucco R-19 Metal Stud Wall | Large Tiered Classroom |
| 6 | Wall | Metal | 50 | 0.120 | 243 | 90 | X | Stucco R-19 Metal Stud Wall | VAV2-1 |
| 7 | Wall | Metal | 963 | 0.120 | 63 | 90 | X | Stucco R-19 Metal Stud Wall | VAV2-3 |
| 8 | Wall | Metal | 360 | 0.120 | 63 | 90 | X | Stucco R-19 Metal Stud Wall | VAV2-4 |
| 9 | Wall | Metal | 339 | 0.120 | 243 | 90 | X | Stucco R-19 Metal Stud Wall | VAV2-5 |
| 10 | Wall | Metal | 65 | 0.120 | 153 | 90 | X | Stucco R-19 Metal Stud Wall | VAV2-5 |
| 11 | Wall | Metal | 215 | 0.120 | 63 | 90 | X | Stucco R-19 Metal Stud Wall | VAV2-6 |
| 12 | Wall | Metal | 215 | 0.120 | 63 | 90 | X | Stucco R-19 Metal Stud Wall | VAV2-7 |
| 13 | Wall | Metal | 360 | 0.120 | 243 | 90 | X | Stucco R-19 Metal Stud Wall | SUP2-8 |
| 14 | Wall | Metal | 360 | 0.120 | 63 | 90 | X | Stucco R-19 Metal Stud Wall | SUP2-9 |
| 15 | Wall | Metal | 180 | 0.120 | 63 | 90 | X | Stucco R-19 Metal Stud Wall | VAV2-10 |
| 16 | Wall | Metal | 260 | 0.120 | 243 | 90 | X | Stucco R-19 Metal Stud Wall | SUP2-11 |
| 17 | Wall | Metal | 73 | 0.120 | 243 | 90 | X | Stucco R-19 Metal Stud Wall | VAV2-13 |
| 18 | Wall | Metal | 73 | 0.120 | 243 | 90 | X | Stucco R-19 Metal Stud Wall | VAV2-14 |
| 19 | Wall | Metal | 110 | 0.120 | 243 | 90 | X | Stucco R-19 Metal Stud Wall | VAV2-15 |
| 20 | Wall | Metal | 135 | 0.120 | 63 | 90 | X | Stucco R-19 Metal Stud Wall | VAV2-16 |

### FENESTRATION SURFACES

Site Assembled Glazing [ ] Check box if Building is >= 100,000 sqft of CFA and >= 10,000 sqft vertical glazing then NFRC Certification is required. Follow NFRC 100-SB Procedures and submit NFRC Label Certificate Form.

| # | Type | Area | U-Fac. | Act. Azm. | SHGC | Glazing Type | Location / Comments |
|---|---|---|---|---|---|---|---|
| 1 | Window | 304 | 0.310 | 333 | 0.31 | GLAZ | Large Tiered Classroom |
| 2 | Window | 64 | 0.310 | 63 | 0.31 | GLAZ | Large Tiered Classroom |
| 3 | Window | 576 | 0.310 | 243 | 0.31 | GLAZ | Large Tiered Classroom |
| 4 | Window | 120 | 0.310 | 243 | 0.31 | GLAZ | VAV2-1 |
| 5 | Window | 112 | 0.310 | 63 | 0.31 | GLAZ | VAV2-3 |
| 6 | Window | 360 | 0.310 | 63 | 0.31 | GLAZ | VAV2-4 |
| 7 | Window | 96 | 0.310 | 243 | 0.31 | GLAZ | VAV2-5 |
| 8 | Window | 220 | 0.310 | 63 | 0.31 | GLAZ | VAV2-6 |
| 9 | Window | 220 | 0.310 | 63 | 0.31 | GLAZ | VAV2-7 |
| 10 | Window | 360 | 0.310 | 243 | 0.31 | GLAZ | SUP2-8 |
| 11 | Window | 360 | 0.310 | 63 | 0.31 | GLAZ | SUP2-9 |
| 12 | Window | 180 | 0.310 | 63 | 0.31 | GLAZ | VAV2-10 |
| 13 | Window | 220 | 0.310 | 243 | 0.31 | GLAZ | SUP2-11 |
| 14 | Window | 72 | 0.310 | 243 | 0.31 | GLAZ | VAV2-13 |
| 15 | Window | 72 | 0.310 | 243 | 0.31 | GLAZ | VAV2-14 |

### EXTERIOR SHADING

| # | Exterior Shade Type | SHGC | Window Hgt. | Window Wd. | Overhang Len. | Overhang Hgt. | Overhang LExt. | Overhang RExt. | Left Fin Dist. Len. Hgt. | Right Fin Dist. Len. Hgt. |
|---|---|---|---|---|---|---|---|---|---|---|
| 1 | None | 0.76 | 8.0 | 38.0 | 4.0 | 1.0 | 4.0 | 4.0 | | |
| 2 | None | 0.76 | | | | | | | | |
| 3 | None | 0.76 | | | | | | | | |
| 4 | None | 0.76 | 120.0 | 10.0 | 5.0 | 0.1 | 2.0 | 2.0 | | |
| 5 | None | 0.76 | 120.0 | 10.0 | 5.0 | 0.1 | 2.0 | 2.0 | | |
| 6 | None | 0.76 | 10.0 | 13.0 | 6.0 | 2.0 | 6.0 | 6.0 | | |
| 7 | None | 0.76 | | | | | | | | |
| 8 | None | 0.76 | | | | | | | | |
| 9 | None | 0.76 | | | | | | | | |
| 10 | None | 0.76 | | | | | | | | |
| 11 | None | 0.76 | | | | | | | | |
| 12 | None | 0.76 | | | | | | | | |
| 13 | None | 0.76 | | | | | | | | |
| 14 | None | 0.76 | | | | | | | | |
| 15 | None | 0.76 | | | | | | | | |

Run Initiation Time: 04/20/04 09:36:37 Run Code: 1082478997

EnergyPro 3.1 By EnergySoft User Number: 5891 Job Number: 2003-003 Page: 9 of 38

## ENVELOPE COMPLIANCE SUMMARY — Performance — ENV-1

PROJECT NAME: SCIENCE BUILDING - LOS MEDANOS COLLEGE — DATE 4/20/2004

### OPAQUE SURFACES

| # | Surface Type | Framing Type | Area | U-Fac. | Act. Azm. | Tilt | Solar Gains Y/N | Form 3 Reference | Location / Comments |
|---|---|---|---|---|---|---|---|---|---|
| 21 | Wall | Metal | 115 | 0.120 | 163 | 90 | X | Stucco R-19 Metal Stud Wall | VAV2-16 |
| 22 | Roof | None | 540 | 0.021 | 0 | 0 | X | R-30 Roof | VAV2-17 |
| 23 | Wall | Metal | 470 | 0.120 | 243 | 90 | X | Stucco R-19 Metal Stud Wall | VAV2-17 |
| 24 | Roof | None | 85 | 0.021 | 0 | 0 | X | R-30 Roof | VAV2-18 |
| 25 | Roof | None | 440 | 0.021 | 0 | 0 | X | R-30 Roof | VAV2-18 |
| 26 | Roof | None | 120 | 0.021 | 0 | 0 | X | R-30 Roof | VAV2-19 |
| 27 | Roof | None | 930 | 0.021 | 0 | 0 | X | R-30 Roof | VAV2-19 |
| 28 | Roof | None | 100 | 0.021 | 0 | 0 | X | R-30 Roof | VAV2-20 |
| 29 | Wall | Metal | 110 | 0.120 | 333 | 90 | X | Stucco R-19 Metal Stud Wall | VAV2-20 |
| 30 | Wall | Metal | 100 | 0.120 | 63 | 90 | X | Stucco R-19 Metal Stud Wall | VAV2-20 |
| 31 | Roof | None | 1,075 | 0.021 | 0 | 0 | X | R-30 Roof | SUP2-21 |
| 32 | Wall | Metal | 260 | 0.120 | 63 | 90 | X | Stucco R-19 Metal Stud Wall | SUP2-21 |
| 33 | Roof | None | 530 | 0.021 | 0 | 0 | X | R-30 Roof | SUP2-22A |
| 34 | Wall | Metal | 120 | 0.120 | 63 | 90 | X | Stucco R-19 Metal Stud Wall | SUP2-22A |
| 35 | Roof | None | 530 | 0.021 | 0 | 0 | X | R-30 Roof | SUP2-22B |
| 36 | Wall | Metal | 120 | 0.120 | 63 | 90 | X | Stucco R-19 Metal Stud Wall | SUP2-22B |
| 37 | Roof | None | 530 | 0.021 | 0 | 0 | X | R-30 Roof | SUP2-22C |
| 38 | Wall | Metal | 120 | 0.120 | 63 | 90 | X | Stucco R-19 Metal Stud Wall | SUP2-22C |
| 39 | Roof | None | 400 | 0.021 | 0 | 0 | X | R-30 Roof | CAV2-23 |
| 40 | Wall | Metal | 150 | 0.120 | 63 | 90 | X | Stucco R-19 Metal Stud Wall | CAV2-23 |

### FENESTRATION SURFACES

Site Assembled Glazing [ ] Check box if Building is >= 100,000 sqft of CFA and >= 10,000 sqft vertical glazing then NFRC Certification is required. Follow NFRC 100-SB Procedures and submit NFRC Label Certificate Form.

| # | Type | Area | U-Fac. | Act. Azm. | SHGC | Glazing Type | Location / Comments |
|---|---|---|---|---|---|---|---|
| 16 | Window | 110 | 0.310 | 243 | 0.31 | GLAZ | VAV2-15 |
| 17 | Window | 30 | 0.310 | 63 | 0.31 | GLAZ | VAV2-16 |
| 18 | Window | 30 | 0.310 | 163 | 0.31 | GLAZ | VAV2-16 |
| 19 | Window | 30 | 0.310 | 243 | 0.31 | GLAZ | VAV2-17 |
| 20 | Window | 30 | 0.310 | 63 | 0.31 | GLAZ | VAV2-20 |
| 21 | Window | 250 | 0.310 | 63 | 0.31 | GLAZ | SUP2-21 |
| 22 | Window | 120 | 0.310 | 63 | 0.31 | GLAZ | SUP2-22A |
| 23 | Window | 120 | 0.310 | 63 | 0.31 | GLAZ | SUP2-22B |
| 24 | Window | 120 | 0.310 | 63 | 0.31 | GLAZ | SUP2-22C |
| 25 | Window | 140 | 0.310 | 63 | 0.31 | GLAZ | CAV2-23 |
| 26 | Window | 220 | 0.310 | 63 | 0.31 | GLAZ | VAV2-24 |
| 27 | Window | 220 | 0.310 | 63 | 0.31 | GLAZ | VAV2-25 |
| 28 | Window | 290 | 0.310 | 63 | 0.31 | GLAZ | VAV2-26 |
| 29 | Window | 360 | 0.310 | 243 | 0.31 | GLAZ | SUP2-27 |
| 30 | Window | 75 | 0.310 | 243 | 0.31 | GLAZ | CAV2-28 |

### EXTERIOR SHADING

| # | Exterior Shade Type | SHGC | Window Hgt. | Window Wd. | Overhang Len. | Overhang Hgt. | Overhang LExt. | Overhang RExt. | Left Fin Dist. Len. Hgt. | Right Fin Dist. Len. Hgt. |
|---|---|---|---|---|---|---|---|---|---|---|
| 16 | None | 0.76 | | | | | | | | |
| 17 | None | 0.76 | 10.0 | 14.0 | 6.0 | 2.0 | 6.0 | 6.0 | | |
| 18 | None | 0.76 | 7.0 | 4.0 | 7.0 | 0.1 | 7.0 | 7.0 | | |
| 19 | None | 0.76 | | | | | | | | |
| 20 | None | 0.76 | | | | | | | | |
| 21 | None | 0.76 | 10.0 | 8.5 | 6.0 | 2.0 | 6.0 | 6.0 | | |
| 22 | None | 0.76 | 10.0 | 13.0 | 6.0 | 2.0 | 6.0 | 6.0 | | |
| 23 | None | 0.76 | 10.0 | 13.0 | 6.0 | 2.0 | 6.0 | 6.0 | | |
| 24 | None | 0.76 | 10.0 | 13.0 | 6.0 | 2.0 | 6.0 | 6.0 | | |
| 25 | None | 0.76 | 10.0 | 13.0 | 6.0 | 2.0 | 6.0 | 6.0 | | |
| 26 | None | 0.76 | 10.0 | 13.0 | 6.0 | 2.0 | 6.0 | 6.0 | | |
| 27 | None | 0.76 | 10.0 | 13.0 | 6.0 | 2.0 | 6.0 | 6.0 | | |
| 28 | None | 0.76 | 10.0 | 13.0 | 6.0 | 2.0 | 6.0 | 6.0 | | |
| 29 | None | 0.76 | 10.0 | 13.0 | 6.0 | 2.0 | 6.0 | 6.0 | | |
| 30 | None | 0.76 | 10.0 | 13.0 | 6.0 | 2.0 | 6.0 | 6.0 | | |

Run Initiation Time: 04/20/04 09:36:37 Run Code: 1082478997

EnergyPro 3.1 By EnergySoft User Number: 5891 Job Number: 2003-003 Page: 10 of 38


tBP architecture planning interiors management

tBP/Architecture 1000 Burnett Avenue, Suite 140 Concord, CA 94520 p: 925.246.6419 f: 925.246.6495

architect

AINSWORTH ASSOCIATES MECHANICAL ENGINEERS SACRAMENTO, CA

consultant

name address city, state, zip ph: fx:

agency


SCIENCE BUILDING LOS MEDANOS COLLEGE

Contra Costa Community College District

owner

tBP project number: 20241.00

file name:

drawn by: checked by:

date: NOVEMBER 15, 2004

Rev. date: description:

drawing title: TITLE 24-MECHANICAL & ENVELOPE TITLE 24 DOCUMENTS

LMC SCIENCE 313-023-112.01-0-00.00

drawing no: M0.3

drawing of ?

## ENVELOPE COMPLIANCE SUMMARY — Performance ENV-1

PROJECT NAME: SCIENCE BUILDING - LOS MEDANOS COLLEGE — DATE: 4/20/2004

### OPAQUE SURFACES

| # | Surface Type | Framing Type | Area | U-Fac. | Act. Azm. | Tilt | Solar Gains Y/N | Form 3 Reference | Location / Comments |
|---|---|---|---|---|---|---|---|---|---|
| 41 | Roof | None | 945 | 0.021 | 0 | 0 | X | R-30 Roof | VAV2-24 |
| 42 | Wall | Metal | 215 | 0.120 | 63 | 90 | X | Stucco R-19 Metal Stud Wall | VAV2-24 |
| 43 | Roof | None | 955 | 0.021 | 0 | 0 | X | R-30 Roof | VAV2-25 |
| 44 | Wall | Metal | 215 | 0.120 | 63 | 90 | X | Stucco R-19 Metal Stud Wall | VAV2-25 |
| 45 | Roof | None | 1,250 | 0.021 | 0 | 0 | X | R-30 Roof | VAV2-26 |
| 46 | Wall | Metal | 290 | 0.120 | 63 | 90 | X | Stucco R-19 Metal Stud Wall | VAV2-26 |
| 47 | Roof | None | 1,625 | 0.021 | 0 | 0 | X | R-30 Roof | SUP2-27 |
| 48 | Wall | Metal | 570 | 0.120 | 243 | 90 | X | Stucco R-19 Metal Stud Wall | SUP2-27 |
| 49 | Wall | Metal | 385 | 0.120 | 243 | 90 | X | Stucco R-19 Metal Stud Wall | SUP2-27 |
| 50 | Roof | None | 190 | 0.021 | 0 | 0 | X | R-30 Roof | CAV2-28 |
| 51 | Wall | Metal | 505 | 0.120 | 243 | 90 | X | Stucco R-19 Metal Stud Wall | CAV2-28 |
| 52 | Roof | None | 1,120 | 0.021 | 0 | 0 | X | R-30 Roof | VAV2-29 |
| 53 | Wall | Metal | 260 | 0.120 | 243 | 90 | X | Stucco R-19 Metal Stud Wall | VAV2-29 |
| 54 | Roof | None | 1,100 | 0.021 | 0 | 0 | X | R-30 Roof | VAV2-30 |
| 55 | Wall | Metal | 230 | 0.120 | 243 | 90 | X | Stucco R-19 Metal Stud Wall | VAV2-30 |
| 56 | Roof | None | 100 | 0.021 | 0 | 0 | X | R-30 Roof | VAV2-31 |
| 57 | Wall | Metal | 95 | 0.120 | 243 | 90 | X | Stucco R-19 Metal Stud Wall | VAV2-31 |
| 58 | Roof | None | 245 | 0.021 | 0 | 0 | X | R-30 Roof | VAV2-32 |
| 59 | Wall | Metal | 120 | 0.120 | 243 | 90 | X | Stucco R-19 Metal Stud Wall | VAV2-33 |
| 60 | Roof | None | 245 | 0.021 | 0 | 0 | X | R-30 Roof | VAV2-33 |

### FENESTRATION SURFACES

Site Assembled Glazing ☐ Check box if Building is >= 100,000 sqft of CFA and >= 10,000 sqft vertical glazing then NFRC Certification is required. Follow NFRC 100-SB Procedures and submit NFRC Label Certificate Form.

| # | Type | Area | U-Fac. | Act. Azm. | SHGC | Glazing Type | Location / Comments |
|---|---|---|---|---|---|---|---|
| 31 | Window | 250 | 0.310 | 243 | 0.31 | GLAZ | VAV2-29 |
| 32 | Window | 235 | 0.310 | 243 | 0.31 | GLAZ | VAV2-30 |
| 33 | Window | 90 | 0.310 | 243 | 0.31 | GLAZ | VAV2-31 |
| 34 | Window | 145 | 0.310 | 243 | 0.31 | GLAZ | VAV2-33 |
| 35 | Window | 30 | 0.310 | 153 | 0.31 | GLAZ | VAV3-29 |
| 36 | Window | 30 | 0.310 | 153 | 0.31 | GLAZ | VAV3-29 |
| 37 | Window | 30 | 0.310 | 153 | 0.31 | GLAZ | VAV3-29 |
| 38 | Window | 30 | 0.310 | 153 | 0.31 | GLAZ | VAV3-29 |
| 39 | Window | 30 | 0.310 | 153 | 0.31 | GLAZ | VAV3-29 |
| 40 | Window | 30 | 0.310 | 153 | 0.31 | GLAZ | VAV3-29 |
| 41 | Window | 30 | 0.310 | 153 | 0.31 | GLAZ | VAV3-30 |
| 42 | Window | 30 | 0.310 | 153 | 0.31 | GLAZ | VAV3-30 |
| 43 | Window | 30 | 0.310 | 153 | 0.31 | GLAZ | VAV3-30 |
| 44 | Window | 30 | 0.310 | 153 | 0.31 | GLAZ | VAV3-30 |
| 45 | Window | 30 | 0.310 | 153 | 0.31 | GLAZ | VAV3-30 |

### EXTERIOR SHADING

| # | Exterior Shade Type | SHGC | Window Hgt. Wd. | Overhang Len. Hgt. LExt. RExt. | Left Fin Dist. Len. Hgt. | Right Fin Dist. Len. Hgt. |
|---|---|---|---|---|---|---|
| 31 | None | 0.76 | 10.0 13.0 | 6.0 2.0 6.0 6.0 | | |
| 32 | None | 0.76 | 10.0 13.0 | 6.0 2.0 6.0 6.0 | | |
| 33 | None | 0.76 | 10.0 13.0 | 6.0 2.0 6.0 6.0 | | |
| 34 | None | 0.76 | 10.0 13.0 | 6.0 2.0 6.0 6.0 | | |
| 35 | None | 0.76 | | | | |
| 36 | None | 0.76 | | | | |
| 37 | None | 0.76 | | | | |
| 38 | None | 0.76 | | | | |
| 39 | None | 0.76 | | | | |
| 40 | None | 0.76 | | | | |
| 41 | None | 0.76 | | | | |
| 42 | None | 0.76 | | | | |
| 43 | None | 0.76 | | | | |
| 44 | None | 0.76 | | | | |
| 45 | None | 0.76 | | | | |

Run Initiation Time: 04/20/04 09:36:37 Run Code: 1082478997

EnergyPro 3.1 By EnergySoft User Number: 5891 Job Number: 2003-003 Page: 11 of 38

## ENVELOPE COMPLIANCE SUMMARY — Performance ENV-1

PROJECT NAME: SCIENCE BUILDING - LOS MEDANOS COLLEGE — DATE: 4/20/2004

### OPAQUE SURFACES

| # | Surface Type | Framing Type | Area | U-Fac. | Act. Azm. | Tilt | Solar Gains Y/N | Form 3 Reference | Location / Comments |
|---|---|---|---|---|---|---|---|---|---|
| 61 | Wall | Metal | 110 | 0.120 | 153 | 90 | X | Stucco R-19 Metal Stud Wall | VAV3-29 |
| 62 | Wall | Metal | 110 | 0.120 | 153 | 90 | X | Stucco R-19 Metal Stud Wall | VAV3-29 |
| 63 | Wall | Metal | 110 | 0.120 | 153 | 90 | X | Stucco R-19 Metal Stud Wall | VAV3-29 |
| 64 | Wall | Metal | 110 | 0.120 | 153 | 90 | X | Stucco R-19 Metal Stud Wall | VAV3-30 |
| 65 | Wall | Metal | 110 | 0.120 | 153 | 90 | X | Stucco R-19 Metal Stud Wall | VAV3-30 |
| 66 | Wall | Metal | 110 | 0.120 | 153 | 90 | X | Stucco R-19 Metal Stud Wall | VAV3-30 |
| 67 | Wall | Metal | 170 | 0.120 | 63 | 90 | X | Stucco R-19 Metal Stud Wall | VAV3-31 |
| 68 | Wall | Metal | 330 | 0.120 | 153 | 90 | X | Stucco R-19 Metal Stud Wall | VAV3-31 |
| 69 | Wall | Metal | 110 | 0.120 | 153 | 90 | X | Stucco R-19 Metal Stud Wall | VAV3-28 |
| 70 | Wall | Metal | 110 | 0.120 | 153 | 90 | X | Stucco R-19 Metal Stud Wall | VAV3-28 |
| 71 | Wall | Metal | 195 | 0.120 | 243 | 90 | X | Stucco R-19 Metal Stud Wall | VAV3-27 |
| 72 | Wall | Metal | 140 | 0.120 | 153 | 90 | X | Stucco R-19 Metal Stud Wall | VAV3-27 |
| 73 | Wall | Metal | 148 | 0.120 | 153 | 90 | X | Stucco R-19 Metal Stud Wall | VAV3-26 |
| 74 | Roof | None | 260 | 0.021 | 0 | 0 | X | R-30 Roof | VAV3-26 |
| 75 | Roof | None | 250 | 0.021 | 0 | 0 | X | R-30 Roof | VAV3-25 |
| 76 | Roof | None | 550 | 0.021 | 0 | 0 | X | R-30 Roof | VAV3-24 |
| 77 | Roof | None | 215 | 0.021 | 0 | 0 | X | R-30 Roof | VAV3-23 |
| 78 | Roof | None | 220 | 0.021 | 0 | 0 | X | R-30 Roof | VAV3-23 |
| 79 | Roof | None | 770 | 0.021 | 0 | 0 | X | R-30 Roof | VAV3-23 |
| 80 | Roof | None | 245 | 0.021 | 0 | 0 | X | R-30 Roof | VAV3-22 |

### FENESTRATION SURFACES

Site Assembled Glazing ☐ Check box if Building is >= 100,000 sqft of CFA and >= 10,000 sqft vertical glazing then NFRC Certification is required. Follow NFRC 100-SB Procedures and submit NFRC Label Certificate Form.

| # | Type | Area | U-Fac. | Act. Azm. | SHGC | Glazing Type | Location / Comments |
|---|---|---|---|---|---|---|---|
| 46 | Window | 30 | 0.310 | 153 | 0.31 | GLAZ | VAV3-30 |
| 47 | Window | 30 | 0.310 | 63 | 0.31 | GLAZ | VAV3-31 |
| 48 | Window | 30 | 0.310 | 153 | 0.31 | GLAZ | VAV3-31 |
| 49 | Window | 30 | 0.310 | 153 | 0.31 | GLAZ | VAV3-31 |
| 50 | Window | 30 | 0.310 | 153 | 0.31 | GLAZ | VAV3-31 |
| 51 | Window | 30 | 0.310 | 153 | 0.31 | GLAZ | VAV3-31 |
| 52 | Window | 30 | 0.310 | 153 | 0.31 | GLAZ | VAV3-31 |
| 53 | Window | 30 | 0.310 | 153 | 0.31 | GLAZ | VAV3-28 |
| 54 | Window | 30 | 0.310 | 153 | 0.31 | GLAZ | VAV3-28 |
| 55 | Window | 30 | 0.310 | 153 | 0.31 | GLAZ | VAV3-28 |
| 56 | Window | 30 | 0.310 | 153 | 0.31 | GLAZ | VAV3-28 |
| 57 | Window | 30 | 0.310 | 153 | 0.31 | GLAZ | VAV3-27 |
| 58 | Window | 32 | 0.310 | 153 | 0.31 | GLAZ | VAV3-26 |
| 59 | Window | 32 | 0.310 | 333 | 0.31 | GLAZ | VAV3-22 |
| 60 | Window | 32 | 0.310 | 333 | 0.31 | GLAZ | VAV3-22 |

### EXTERIOR SHADING

| # | Exterior Shade Type | SHGC | Window Hgt. Wd. | Overhang Len. Hgt. LExt. RExt. | Left Fin Dist. Len. Hgt. | Right Fin Dist. Len. Hgt. |
|---|---|---|---|---|---|---|
| 46 | None | 0.76 | | | | |
| 47 | None | 0.76 | | | | |
| 48 | None | 0.76 | | | | |
| 49 | None | 0.76 | | | | |
| 50 | None | 0.76 | | | | |
| 51 | None | 0.76 | | | | |
| 52 | None | 0.76 | | | | |
| 53 | None | 0.76 | | | | |
| 54 | None | 0.76 | | | | |
| 55 | None | 0.76 | | | | |
| 56 | None | 0.76 | | | | |
| 57 | None | 0.76 | | | | |
| 58 | None | 0.76 | | | | |
| 59 | None | 0.76 | | | | |
| 60 | None | 0.76 | | | | |

Run Initiation Time: 04/20/04 09:36:37 Run Code: 1082478997

EnergyPro 3.1 By EnergySoft User Number: 5891 Job Number: 2003-003 Page: 12 of 38

## ENVELOPE COMPLIANCE SUMMARY — Performance ENV-1

PROJECT NAME: SCIENCE BUILDING - LOS MEDANOS COLLEGE — DATE: 4/20/2004

### OPAQUE SURFACES

| # | Surface Type | Framing Type | Area | U-Fac. | Act. Azm. | Tilt | Solar Gains Y/N | Form 3 Reference | Location / Comments |
|---|---|---|---|---|---|---|---|---|---|
| 81 | Wall | Metal | 161 | 0.120 | 333 | 90 | X | Stucco R-19 Metal Stud Wall | VAV3-22 |
| 82 | Roof | None | 220 | 0.021 | 0 | 0 | X | R-30 Roof | VAV3-21 |
| 83 | Wall | Metal | 161 | 0.120 | 333 | 90 | X | Stucco R-19 Metal Stud Wall | VAV3-21 |
| 84 | Roof | None | 125 | 0.021 | 0 | 0 | X | R-30 Roof | VAV3-20 |
| 85 | Roof | None | 150 | 0.021 | 0 | 0 | X | R-30 Roof | VAV3-19 |
| 86 | Wall | Metal | 128 | 0.120 | 317 | 90 | X | Stucco R-19 Metal Stud Wall | VAV3-19 |
| 87 | Roof | None | 110 | 0.021 | 0 | 0 | X | R-30 Roof | VAV3-18 |
| 88 | Wall | Metal | 160 | 0.120 | 333 | 90 | X | Stucco R-19 Metal Stud Wall | VAV3-18 |
| 89 | Roof | None | 510 | 0.021 | 0 | 0 | X | R-30 Roof | VAV3-17 |
| 90 | Wall | Metal | 80 | 0.120 | 333 | 90 | X | Stucco R-19 Metal Stud Wall | VAV3-17 |
| 91 | Wall | Metal | 178 | 0.120 | 153 | 90 | X | Stucco R-19 Metal Stud Wall | VAV3-17 |
| 92 | Roof | None | 1,255 | 0.021 | 0 | 0 | X | R-30 Roof | VAV3-16 |
| 93 | Wall | Metal | 392 | 0.120 | 317 | 90 | X | Stucco R-19 Metal Stud Wall | VAV3-16 |
| 94 | Wall | Metal | 288 | 0.120 | 243 | 90 | X | Stucco R-19 Metal Stud Wall | VAV3-16 |
| 95 | Wall | Metal | 547 | 0.120 | 153 | 90 | X | Stucco R-19 Metal Stud Wall | VAV3-16 |
| 96 | Roof | None | 1,210 | 0.021 | 0 | 0 | X | R-30 Roof | VAV3-15 |
| 97 | Wall | Metal | 160 | 0.120 | 333 | 90 | X | Stucco R-19 Metal Stud Wall | VAV3-15 |
| 98 | Wall | Metal | 160 | 0.120 | 153 | 90 | X | Stucco R-19 Metal Stud Wall | VAV3-15 |
| 99 | Wall | Metal | 0 | 0.120 | 333 | 90 | X | Stucco R-19 Metal Stud Wall | VAV3-1 |
| 100 | Wall | Metal | 0 | 0.120 | 153 | 90 | X | Stucco R-19 Metal Stud Wall | VAV3-1 |

### FENESTRATION SURFACES

Site Assembled Glazing ☐ Check box if Building is >= 100,000 sqft of CFA and >= 10,000 sqft vertical glazing then NFRC Certification is required. Follow NFRC 100-SB Procedures and submit NFRC Label Certificate Form.

| # | Type | Area | U-Fac. | Act. Azm. | SHGC | Glazing Type | Location / Comments |
|---|---|---|---|---|---|---|---|
| 61 | Window | 32 | 0.310 | 333 | 0.31 | GLAZ | VAV3-21 |
| 62 | Window | 32 | 0.310 | 333 | 0.31 | GLAZ | VAV3-21 |
| 63 | Window | 32 | 0.310 | 317 | 0.31 | GLAZ | VAV3-19 |
| 64 | Window | 32 | 0.310 | 153 | 0.31 | GLAZ | VAV3-17 |
| 65 | Window | 32 | 0.310 | 317 | 0.31 | GLAZ | VAV3-16 |
| 66 | Window | 32 | 0.310 | 317 | 0.31 | GLAZ | VAV3-16 |
| 67 | Window | 32 | 0.310 | 317 | 0.31 | GLAZ | VAV3-16 |
| 68 | Window | 32 | 0.310 | 317 | 0.31 | GLAZ | VAV3-16 |
| 69 | Window | 160 | 0.310 | 243 | 0.31 | GLAZ | VAV3-16 |
| 70 | Window | 32 | 0.310 | 243 | 0.31 | GLAZ | VAV3-16 |
| 71 | Window | 32 | 0.310 | 153 | 0.31 | GLAZ | VAV3-16 |
| 72 | Window | 32 | 0.310 | 153 | 0.31 | GLAZ | VAV3-16 |
| 73 | Window | 32 | 0.310 | 153 | 0.31 | GLAZ | VAV3-16 |
| 74 | Window | 32 | 0.310 | 153 | 0.31 | GLAZ | VAV3-16 |
| 75 | Window | 320 | 0.310 | 333 | 0.31 | GLAZ | VAV3-15 |

### EXTERIOR SHADING

| # | Exterior Shade Type | SHGC | Window Hgt. Wd. | Overhang Len. Hgt. LExt. RExt. | Left Fin Dist. Len. Hgt. | Right Fin Dist. Len. Hgt. |
|---|---|---|---|---|---|---|
| 61 | None | 0.76 | | | | |
| 62 | None | 0.76 | | | | |
| 63 | None | 0.76 | | | | |
| 64 | None | 0.76 | | | | |
| 65 | None | 0.76 | | | | |
| 66 | None | 0.76 | | | | |
| 67 | None | 0.76 | | | | |
| 68 | None | 0.76 | | | | |
| 69 | None | 0.76 | | | | |
| 70 | None | 0.76 | | | | |
| 71 | None | 0.76 | | | | |
| 72 | None | 0.76 | | | | |
| 73 | None | 0.76 | | | | |
| 74 | None | 0.76 | | | | |
| 75 | None | 0.76 | | | | |

Run Initiation Time: 04/20/04 09:36:37 Run Code: 1082478997

EnergyPro 3.1 By EnergySoft User Number: 5891 Job Number: 2003-003 Page: 13 of 38

## ENVELOPE COMPLIANCE SUMMARY — Performance ENV-1

PROJECT NAME: SCIENCE BUILDING - LOS MEDANOS COLLEGE — DATE: 4/20/2004

### OPAQUE SURFACES

| # | Surface Type | Framing Type | Area | U-Fac. | Act. Azm. | Tilt | Solar Gains Y/N | Form 3 Reference | Location / Comments |
|---|---|---|---|---|---|---|---|---|---|
| 101 | Wall | Metal | 124 | 0.120 | 243 | 90 | X | Stucco R-19 Metal Stud Wall | VAV3-2 |
| 102 | Wall | Metal | 531 | 0.120 | 317 | 90 | X | Stucco R-19 Metal Stud Wall | VAV3-2 |
| 103 | Wall | Metal | 87 | 0.120 | 333 | 90 | X | Stucco R-19 Metal Stud Wall | VAV3-2 |
| 104 | Wall | Metal | 176 | 0.120 | 243 | 90 | X | Stucco R-19 Metal Stud Wall | VAV3-3 |
| 105 | Wall | Metal | 372 | 0.120 | 153 | 90 | X | Stucco R-19 Metal Stud Wall | VAV3-3 |
| 106 | Roof | None | 125 | 0.021 | 0 | 0 | X | R-30 Roof | VAV3-4 |
| 107 | Wall | Metal | 220 | 0.120 | 243 | 90 | X | Stucco R-19 Metal Stud Wall | VAV3-4 |
| 108 | Wall | Metal | 124 | 0.120 | 153 | 90 | X | Stucco R-19 Metal Stud Wall | VAV3-4 |
| 109 | Roof | None | 315 | 0.021 | 0 | 0 | X | R-30 Roof | VAV3-5 |
| 110 | Wall | Metal | 220 | 0.120 | 63 | 90 | X | Stucco R-19 Metal Stud Wall | VAV3-5 |
| 111 | Wall | Metal | 241 | 0.120 | 153 | 90 | X | Stucco R-19 Metal Stud Wall | VAV3-5 |
| 112 | Wall | Metal | 468 | 0.120 | 333 | 90 | X | Stucco R-19 Metal Stud Wall | VAV3-6 |
| 113 | Wall | Metal | 145 | 0.120 | 270 | 90 | X | Stucco R-19 Metal Stud Wall | VAV3-6 |
| 114 | Wall | Metal | 195 | 0.120 | 243 | 90 | X | Stucco R-19 Metal Stud Wall | VAV3-10 |
| 115 | Wall | Metal | 140 | 0.120 | 153 | 90 | X | Stucco R-19 Metal Stud Wall | VAV3-10 |
| 116 | Wall | Metal | 110 | 0.120 | 153 | 90 | X | Stucco R-19 Metal Stud Wall | VAV3-11 |
| 117 | Wall | Metal | 110 | 0.120 | 153 | 90 | X | Stucco R-19 Metal Stud Wall | VAV3-11 |
| 118 | Wall | Metal | 110 | 0.120 | 153 | 90 | X | Stucco R-19 Metal Stud Wall | VAV3-11 |
| 119 | Wall | Metal | 110 | 0.120 | 153 | 90 | X | Stucco R-19 Metal Stud Wall | VAV3-12 |
| 120 | Wall | Metal | 110 | 0.120 | 153 | 90 | X | Stucco R-19 Metal Stud Wall | VAV3-12 |

### FENESTRATION SURFACES

Site Assembled Glazing ☐ Check box if Building is >= 100,000 sqft of CFA and >= 10,000 sqft vertical glazing then NFRC Certification is required. Follow NFRC 100-SB Procedures and submit NFRC Label Certificate Form.

| # | Type | Area | U-Fac. | Act. Azm. | SHGC | Glazing Type | Location / Comments |
|---|---|---|---|---|---|---|---|
| 76 | Window | 320 | 0.310 | 153 | 0.31 | GLAZ | VAV3-15 |
| 77 | Window | 200 | 0.310 | 333 | 0.31 | GLAZ | VAV3-1 |
| 78 | Window | 120 | 0.310 | 333 | 0.31 | GLAZ | VAV3-1 |
| 79 | Window | 200 | 0.310 | 153 | 0.31 | GLAZ | VAV3-1 |
| 80 | Window | 120 | 0.310 | 153 | 0.31 | GLAZ | VAV3-1 |
| 81 | Window | 36 | 0.310 | 243 | 0.31 | GLAZ | VAV3-2 |
| 82 | Window | 36 | 0.310 | 317 | 0.31 | GLAZ | VAV3-2 |
| 83 | Window | 36 | 0.310 | 317 | 0.31 | GLAZ | VAV3-2 |
| 84 | Window | 36 | 0.310 | 317 | 0.31 | GLAZ | VAV3-2 |
| 85 | Window | 36 | 0.310 | 317 | 0.31 | GLAZ | VAV3-2 |
| 86 | Window | 36 | 0.310 | 333 | 0.31 | GLAZ | VAV3-2 |
| 87 | Window | 36 | 0.310 | 333 | 0.31 | GLAZ | VAV3-2 |
| 88 | Window | 36 | 0.310 | 333 | 0.31 | GLAZ | VAV3-2 |
| 89 | Window | 36 | 0.310 | 243 | 0.31 | GLAZ | VAV3-3 |
| 90 | Window | 36 | 0.310 | 243 | 0.31 | GLAZ | VAV3-3 |

### EXTERIOR SHADING

| # | Exterior Shade Type | SHGC | Window Hgt. Wd. | Overhang Len. Hgt. LExt. RExt. | Left Fin Dist. Len. Hgt. | Right Fin Dist. Len. Hgt. |
|---|---|---|---|---|---|---|
| 76 | None | 0.76 | | | | |
| 77 | None | 0.76 | 10.0 20.0 | 8.0 0.2 8.0 8.0 | | |
| 78 | None | 0.76 | | | | |
| 79 | None | 0.76 | 10.0 20.0 | 8.0 0.2 8.0 8.0 | | |
| 80 | None | 0.76 | | | | |
| 81 | None | 0.76 | | | | |
| 82 | None | 0.76 | | | | |
| 83 | None | 0.76 | | | | |
| 84 | None | 0.76 | | | | |
| 85 | None | 0.76 | | | | |
| 86 | None | 0.76 | | | | |
| 87 | None | 0.76 | | | | |
| 88 | None | 0.76 | | | | |
| 89 | None | 0.76 | | | | |
| 90 | None | 0.76 | | | | |

Run Initiation Time: 04/20/04 09:36:37 Run Code: 1082478997

EnergyPro 3.1 By EnergySoft User Number: 5891 Job Number: 2003-003 Page: 14 of 38

## ENVELOPE COMPLIANCE SUMMARY — Performance ENV-1

PROJECT NAME: SCIENCE BUILDING - LOS MEDANOS COLLEGE — DATE: 4/20/2004

### OPAQUE SURFACES

| # | Surface Type | Framing Type | Area | U-Fac. | Act. Azm. | Tilt | Solar Gains Y/N | Form 3 Reference | Location / Comments |
|---|---|---|---|---|---|---|---|---|---|
| 121 | Wall | Metal | 110 | 0.120 | 153 | 90 | X | Stucco R-19 Metal Stud Wall | VAV3-12 |
| 122 | Wall | Metal | 110 | 0.120 | 153 | 90 | X | Stucco R-19 Metal Stud Wall | VAV3-13 |
| 123 | Wall | Metal | 110 | 0.120 | 153 | 90 | X | Stucco R-19 Metal Stud Wall | VAV3-13 |
| 124 | Wall | Metal | 110 | 0.120 | 153 | 90 | X | Stucco R-19 Metal Stud Wall | VAV3-13 |
| 125 | Wall | Metal | 260 | 0.120 | 63 | 90 | X | Stucco R-19 Metal Stud Wall | VAV3-14 |
| 126 | Wall | Metal | 270 | 0.120 | 153 | 90 | X | Stucco R-19 Metal Stud Wall | VAV3-14 |

### FENESTRATION SURFACES

Site Assembled Glazing ☐ Check box if Building is >= 100,000 sqft of CFA and >= 10,000 sqft vertical glazing then NFRC Certification is required. Follow NFRC 100-SB Procedures and submit NFRC Label Certificate Form.

| # | Type | Area | U-Fac. | Act. Azm. | SHGC | Glazing Type | Location / Comments |
|---|---|---|---|---|---|---|---|
| 91 | Window | 36 | 0.310 | 243 | 0.31 | GLAZ | VAV3-3 |
| 92 | Window | 36 | 0.310 | 243 | 0.31 | GLAZ | VAV3-3 |
| 93 | Window | 36 | 0.310 | 153 | 0.31 | GLAZ | VAV3-3 |
| 94 | Window | 36 | 0.310 | 153 | 0.31 | GLAZ | VAV3-3 |
| 95 | Window | 36 | 0.310 | 153 | 0.31 | GLAZ | VAV3-3 |
| 96 | Window | 36 | 0.310 | 153 | 0.31 | GLAZ | VAV3-4 |
| 97 | Window | 36 | 0.310 | 153 | 0.31 | GLAZ | VAV3-5 |
| 98 | Window | 36 | 0.310 | 153 | 0.31 | GLAZ | VAV3-5 |
| 99 | Window | 36 | 0.310 | 153 | 0.31 | GLAZ | VAV3-5 |
| 100 | Window | 36 | 0.310 | 153 | 0.31 | GLAZ | VAV3-5 |
| 101 | Window | 112 | 0.310 | 333 | 0.31 | GLAZ | VAV3-6 |
| 102 | Window | 30 | 0.310 | 153 | 0.31 | GLAZ | VAV3-10 |
| 103 | Window | 30 | 0.310 | 153 | 0.31 | GLAZ | VAV3-11 |
| 104 | Window | 30 | 0.310 | 153 | 0.31 | GLAZ | VAV3-11 |
| 105 | Window | 30 | 0.310 | 153 | 0.31 | GLAZ | VAV3-11 |

### EXTERIOR SHADING

| # | Exterior Shade Type | SHGC | Window Hgt. Wd. | Overhang Len. Hgt. LExt. RExt. | Left Fin Dist. Len. Hgt. | Right Fin Dist. Len. Hgt. |
|---|---|---|---|---|---|---|
| 91 | None | 0.76 | | | | |
| 92 | None | 0.76 | | | | |
| 93 | None | 0.76 | | | | |
| 94 | None | 0.76 | | | | |
| 95 | None | 0.76 | | | | |
| 96 | None | 0.76 | | | | |
| 97 | None | 0.76 | | | | |
| 98 | None | 0.76 | | | | |
| 99 | None | 0.76 | | | | |
| 100 | None | 0.76 | | | | |
| 101 | None | 0.76 | | | | |
| 102 | None | 0.76 | | | | |
| 103 | None | 0.76 | | | | |
| 104 | None | 0.76 | | | | |
| 105 | None | 0.76 | | | | |

Run Initiation Time: 04/20/04 09:36:37 Run Code: 1082478997

EnergyPro 3.1 By EnergySoft User Number: 5891 Job Number: 2003-003 Page: 15 of 38

## ENVELOPE COMPLIANCE SUMMARY — Performance ENV-1

PROJECT NAME: SCIENCE BUILDING - LOS MEDANOS COLLEGE — DATE: 4/20/2004

### OPAQUE SURFACES

| # | Surface Type | Framing Type | Area | U-Fac. | Act. Azm. | Tilt | Solar Gains Y/N | Form 3 Reference | Location / Comments |
|---|---|---|---|---|---|---|---|---|---|

### FENESTRATION SURFACES

Site Assembled Glazing ☐ Check box if Building is >= 100,000 sqft of CFA and >= 10,000 sqft vertical glazing then NFRC Certification is required. Follow NFRC 100-SB Procedures and submit NFRC Label Certificate Form.

| # | Type | Area | U-Fac. | Act. Azm. | SHGC | Glazing Type | Location / Comments |
|---|---|---|---|---|---|---|---|
| 106 | Window | 30 | 0.310 | 153 | 0.31 | GLAZ | VAV3-11 |
| 107 | Window | 30 | 0.310 | 153 | 0.31 | GLAZ | VAV3-11 |
| 108 | Window | 30 | 0.310 | 153 | 0.31 | GLAZ | VAV3-11 |
| 109 | Window | 30 | 0.310 | 153 | 0.31 | GLAZ | VAV3-12 |
| 110 | Window | 30 | 0.310 | 153 | 0.31 | GLAZ | VAV3-12 |
| 111 | Window | 30 | 0.310 | 153 | 0.31 | GLAZ | VAV3-12 |
| 112 | Window | 30 | 0.310 | 153 | 0.31 | GLAZ | VAV3-12 |
| 113 | Window | 30 | 0.310 | 153 | 0.31 | GLAZ | VAV3-12 |
| 114 | Window | 30 | 0.310 | 153 | 0.31 | GLAZ | VAV3-12 |
| 115 | Window | 30 | 0.310 | 153 | 0.31 | GLAZ | VAV3-13 |
| 116 | Window | 30 | 0.310 | 153 | 0.31 | GLAZ | VAV3-13 |
| 117 | Window | 30 | 0.310 | 153 | 0.31 | GLAZ | VAV3-13 |
| 118 | Window | 30 | 0.310 | 153 | 0.31 | GLAZ | VAV3-13 |
| 119 | Window | 30 | 0.310 | 153 | 0.31 | GLAZ | VAV3-13 |
| 120 | Window | 30 | 0.310 | 153 | 0.31 | GLAZ | VAV3-13 |

### EXTERIOR SHADING

| # | Exterior Shade Type | SHGC | Window Hgt. Wd. | Overhang Len. Hgt. LExt. RExt. | Left Fin Dist. Len. Hgt. | Right Fin Dist. Len. Hgt. |
|---|---|---|---|---|---|---|
| 106 | None | 0.76 | | | | |
| 107 | None | 0.76 | | | | |
| 108 | None | 0.76 | | | | |
| 109 | None | 0.76 | | | | |
| 110 | None | 0.76 | | | | |
| 111 | None | 0.76 | | | | |
| 112 | None | 0.76 | | | | |
| 113 | None | 0.76 | | | | |
| 114 | None | 0.76 | | | | |
| 115 | None | 0.76 | | | | |
| 116 | None | 0.76 | | | | |
| 117 | None | 0.76 | | | | |
| 118 | None | 0.76 | | | | |
| 119 | None | 0.76 | | | | |
| 120 | None | 0.76 | | | | |

Run Initiation Time: 04/20/04 09:36:37 Run Code: 1082478997

EnergyPro 3.1 By EnergySoft User Number: 5891 Job Number: 2003-003 Page: 16 of 38

## ENVELOPE COMPLIANCE SUMMARY — Performance ENV-1

PROJECT NAME: SCIENCE BUILDING - LOS MEDANOS COLLEGE — DATE: 4/20/2004

### OPAQUE SURFACES

| # | Surface Type | Framing Type | Area | U-Fac. | Act. Azm. | Tilt | Solar Gains Y/N | Form 3 Reference | Location / Comments |
|---|---|---|---|---|---|---|---|---|---|

### FENESTRATION SURFACES

Site Assembled Glazing ☐ Check box if Building is >= 100,000 sqft of CFA and >= 10,000 sqft vertical glazing then NFRC Certification is required. Follow NFRC 100-SB Procedures and submit NFRC Label Certificate Form.

| # | Type | Area | U-Fac. | Act. Azm. | SHGC | Glazing Type | Location / Comments |
|---|---|---|---|---|---|---|---|
| 121 | Window | 30 | 0.310 | 153 | 0.31 | GLAZ | VAV3-14 |
| 122 | Window | 30 | 0.310 | 153 | 0.31 | GLAZ | VAV3-14 |
| 123 | Window | 30 | 0.310 | 153 | 0.31 | GLAZ | VAV3-14 |

### EXTERIOR SHADING

| # | Exterior Shade Type | SHGC | Window Hgt. Wd. | Overhang Len. Hgt. LExt. RExt. | Left Fin Dist. Len. Hgt. | Right Fin Dist. Len. Hgt. |
|---|---|---|---|---|---|---|
| 121 | None | 0.76 | | | | |
| 122 | None | 0.76 | | | | |
| 123 | None | 0.76 | | | | |

Run Initiation Time: 04/20/04 09:36:37 Run Code: 1082478997

EnergyPro 3.1 By EnergySoft User Number: 5891 Job Number: 2003-003 Page: 17 of 38

## CERTIFICATE OF COMPLIANCE — Performance MECH-1

PROJECT NAME: SCIENCE BUILDING - LOS MEDANOS COLLEGE — DATE: 4/20/2004

### SYSTEM FEATURES

| SYSTEM NAME | MECHANICAL SYSTEMS: Chiller | Cooling Tower | Cooling Tower | NOTE TO FIELD |
|---|---|---|---|---|
| TIME CONTROL | n/a | n/a | n/a | |
| SETBACK CONTROL | n/a | n/a | n/a | |
| ISOLATION ZONES | n/a | n/a | n/a | |
| HEAT PUMP THERMOSTAT? | n/a | n/a | n/a | |
| ELECTRIC HEAT? | n/a | n/a | n/a | |
| FAN CONTROL | n/a | n/a | n/a | |
| VAV MINIMUM POSITION CONTROL? | n/a | n/a | n/a | |
| SIMULTANEOUS HEAT/COOL? | n/a | n/a | n/a | |
| HEATING SUPPLY RESET | n/a | n/a | n/a | |
| COOLING SUPPLY RESET | n/a | Fixed-Temp | Fixed-Temp | |
| HEAT REJECTION CONTROL | n/a | One-Speed-Fan | Two-Speed-Fan | |
| VENTILATION | n/a | n/a | n/a | |
| OUTDOOR DAMPER CONTROL | n/a | n/a | n/a | |
| ECONOMIZER TYPE | n/a | n/a | n/a | |
| DESIGN O.A. CFM (MECH-3, COLUMN I) | n/a | n/a | n/a | |
| HEATING EQUIPMENT TYPE | n/a | n/a | n/a | |
| HEATING EQUIPMENT EFFICIENCY | n/a | n/a | n/a | |
| COOLING EQUIPMENT TYPE | Centrifugal | Tower w/10.0 bhp fan | Tower w/25.0 bhp fan | |
| COOLING EQUIPMENT EFFICIENCY | 0.521 kW/ton | 12 F App | 12 F App | |
| MAKE AND MODEL NUMBER | York YKBBBDPI-CFJ- 290 Tons | Evapco 290 Tons | 250 Ton Tower/25HP | |
| PIPE INSULATION REQUIRED? | Yes | No | No | |
| PIPE/DUCT INSULATION PROTECTED? | Yes | n/a | n/a | |
| HEATING DUCT LOCATION R-VALUE | n/a n/a | n/a n/a | n/a n/a | |
| COOLING DUCT LOCATION R-VALUE | n/a n/a | n/a n/a | n/a n/a | |
| VERIFIED SEALED DUCTS IN CEILING/ROOF SPACE | n/a | n/a | n/a | |

CODE TABLES: Enter code from table below into columns above.

| Question | Code |
|---|---|
| HEAT PUMP THERMOSTAT? | Y: Yes N: No |
| ELECTRIC HEAT? | |
| VAV MINIMUM POSITION CONTROL? | |
| SIMULTANEOUS HEAT / COOL? | |
| HEAT AND COOL SUPPLY RESET? | |
| HIGH EFFICIENCY? | |
| PIPE INSULATION REQUIRED? | |
| PIPE/DUCT INSULATION PROTECTED? | |
| SEALED DUCTS IN CEILING/ROOF SPACE? | |

| TIME CONTROL | SETBACK CTRL. | ISOLATION ZONES | FAN CONTROL |
|---|---|---|---|
| S: Prog. Switch<br>O: Occupancy Sensor<br>M: Manual Timer | H: Heating<br>C: Cooling<br>B: Both | Enter Number of Isolation Zones. | I: Inlet Vanes<br>P: Variable Pitch<br>V: VFD<br>O: Other C: Curve |

| VENTILATION | OUTDOOR DAMPER | ECONOMIZER | O.A. CFM |
|---|---|---|---|
| B: Air Balance<br>C: Outside Air Cert.<br>M: Out. Air Measure<br>D: Demand Control<br>N: Natural | A: Auto<br>G: Gravity | A: Air<br>W: Water<br>N: Not Required<br>EC: Economizer Control See Section 144(e)3 | Enter Outdoor Air CFM.<br>Note: This shall be no less than Col. H on MECH-3. |

NOTES TO FIELD - For Building Department Use Only

Run Initiation Time: 04/20/04 09:36:37 Run Code: 1082478997

EnergyPro 3.1 By EnergySoft User Number: 5891 Job Number: 2003-003 Page: 18 of 38

tBP architecture planning interiors management

tBP/Architecture 1000 Burnett Avenue, Suite 140 Concord, CA 94520 p: 925.246.6419 f: 925.246.6495

architect

AINSWORTH ASSOCIATES MECHANICAL ENGINEERS SACRAMENTO, CA

consultant

name address city, state, zip p/f

agency

SCIENCE BUILDING LOS MEDANOS COLLEGE

Contra Costa Community College District

owner

tBP project number : 20241.00

file name:

drawn by: checked by:

date: NOVEMBER 15, 2004

| Rev. | date: | description: |
|---|---|---|

drawing title: TITLE 24-MECHANICAL & ENVELOPE TITLE 24 DOCUMENTS

LMC SCIENCE 313-023-112.01-0-00.00

drawing no.: M0.4

drawing of ?

# CERTIFICATE OF COMPLIANCE — Performance — MECH-1

PROJECT NAME: SCIENCE BUILDING - LOS MEDANOS COLLEGE — DATE: 4/20/2004

SYSTEM FEATURES

| SYSTEM NAME | MECHANICAL SYSTEMS: Hot Water Boiler | DHW Heater | AC-1 | NOTE TO FIELD |
|---|---|---|---|---|
| TIME CONTROL | n/a | n/a | Programmable Switch | |
| SETBACK CONTROL | n/a | n/a | Heating Required | |
| ISOLATION ZONES | n/a | n/a | n/a | |
| HEAT PUMP THERMOSTAT? | n/a | n/a | n/a | |
| ELECTRIC HEAT? | n/a | n/a | n/a | |
| FAN CONTROL | n/a | n/a | FC w/Vanes | |
| VAV MINIMUM POSITION CONTROL? | n/a | n/a | Yes | |
| SIMULTANEOUS HEAT/COOL? | n/a | n/a | Yes | |
| HEATING SUPPLY RESET | n/a | n/a | Constant Temp | |
| COOLING SUPPLY RESET | n/a | n/a | OA Reset | |
| HEAT REJECTION CONTROL | n/a | n/a | n/a | |
| VENTILATION | n/a | n/a | Air Balance | |
| OUTDOOR DAMPER CONTROL | n/a | n/a | Auto | |
| ECONOMIZER TYPE | n/a | n/a | Fixed Temp (Integrated) | |
| DESIGN O.A. CFM (MECH-3, COLUMN I) | n/a | n/a | 1785 cfm | |
| HEATING EQUIPMENT TYPE | Gas Fired | Gas Fired | None | |
| HEATING EQUIPMENT EFFICIENCY | 85% | 79% | n/a | |
| COOLING EQUIPMENT TYPE | n/a | n/a | Packaged VAV | |
| COOLING EQUIPMENT EFFICIENCY | n/a | n/a | 9.5 EER | |
| MAKE AND MODEL NUMBER | PKN 1000 | NORITZ N-132 | AC-1 ENERGY LABS | |
| PIPE INSULATION REQUIRED? | Yes | Yes | Yes | |
| PIPE/DUCT INSULATION PROTECTED? | Yes | Yes | Yes | |
| HEATING DUCT LOCATION / R-VALUE | n/a / n/a | n/a / n/a | Ducts in Attic / 4.2 | |
| COOLING DUCT LOCATION / R-VALUE | n/a / n/a | n/a / n/a | Ducts in Attic / 4.2 | |
| VERIFIED SEALED DUCTS IN CEILING/ROOF SPACE | n/a | n/a | No | |

CODE TABLES: Enter code from table below into columns above.

| Question | Code |
|---|---|
| HEAT PUMP THERMOSTAT? | Y: Yes N: No |
| ELECTRIC HEAT? | |
| VAV MINIMUM POSITION CONTROL? | |
| SIMULTANEOUS HEAT / COOL? | |
| HEAT AND COOL SUPPLY RESET? | |
| HIGH EFFICIENCY? | |
| PIPE INSULATION REQUIRED? | |
| PIPE/DUCT INSULATION PROTECTED? | |
| SEALED DUCTS IN CEILING/ROOF SPACE? | |

| TIME CONTROL | SETBACK CTRL. | ISOLATION ZONES | FAN CONTROL |
|---|---|---|---|
| S: Prog. Switch<br>O: Occupancy Sensor<br>M: Manual Timer | H: Heating<br>C: Cooling<br>B: Both | Enter Number of Isolation Zones. | I: Inlet Vanes<br>P: Variable Pitch<br>V: VFD<br>O: Other C: Curve |

| VENTILATION | OUTDOOR DAMPER | ECONOMIZER | O.A. CFM |
|---|---|---|---|
| B: Air Balance<br>C: Outside Air Cert.<br>M: Out. Air Measure<br>D: Demand Control<br>N: Natural | A: Auto<br>G: Gravity | A: Air<br>W: Water<br>N: Not Required<br>EC: Economizer Control See Section 144(e)3 | Enter Outdoor Air CFM.<br>Note: This shall be no less than Col. H on MECH-3. |

NOTES TO FIELD - For Building Department Use Only

Run Initiation Time: 04/20/04 09:36:37 Run Code: 1082478997



# CERTIFICATE OF COMPLIANCE — Performance — MECH-1

PROJECT NAME: SCIENCE BUILDING - LOS MEDANOS COLLEGE — DATE: 4/20/2004

SYSTEM FEATURES

| SYSTEM NAME | MECHANICAL SYSTEMS: AH-2 | AH-3 | | NOTE TO FIELD |
|---|---|---|---|---|
| TIME CONTROL | Programmable Switch | Programmable Switch | | |
| SETBACK CONTROL | Heating Required | Heating Required | | |
| ISOLATION ZONES | | n/a | | |
| HEAT PUMP THERMOSTAT? | n/a | n/a | | |
| ELECTRIC HEAT? | n/a | n/a | | |
| FAN CONTROL | FC w/Vanes | FC w/Vanes | | |
| VAV MINIMUM POSITION CONTROL? | Yes | Yes | | |
| SIMULTANEOUS HEAT/COOL? | Yes | Yes | | |
| HEATING SUPPLY RESET | Constant Temp | Constant Temp | | |
| COOLING SUPPLY RESET | OA Reset | OA Reset | | |
| HEAT REJECTION CONTROL | n/a | n/a | | |
| VENTILATION | Air Balance | Air Balance | | |
| OUTDOOR DAMPER CONTROL | Auto | Auto | | |
| ECONOMIZER TYPE | Fixed Temp (Integrated) | Fixed Temp (Integrated) | | |
| DESIGN O.A. CFM (MECH-3, COLUMN I) | 35406 cfm | 6231 cfm | | |
| HEATING EQUIPMENT TYPE | None | None | | |
| HEATING EQUIPMENT EFFICIENCY | n/a | n/a | | |
| COOLING EQUIPMENT TYPE | Built-Up VAV | Built-Up VAV | | |
| COOLING EQUIPMENT EFFICIENCY | n/a | n/a | | |
| MAKE AND MODEL NUMBER | AH-2 ENERGY LABS | AH-3 ENERGY LABS | | |
| PIPE INSULATION REQUIRED? | Yes | Yes | | |
| PIPE/DUCT INSULATION PROTECTED? | Yes | Yes | | |
| HEATING DUCT LOCATION / R-VALUE | Ducts in Attic / 4.2 | Ducts in Attic / 4.2 | | |
| COOLING DUCT LOCATION / R-VALUE | Ducts in Attic / 4.2 | Ducts in Attic / 4.2 | | |
| VERIFIED SEALED DUCTS IN CEILING/ROOF SPACE | No | No | | |

CODE TABLES: Enter code from table below into columns above.

| Question | Code |
|---|---|
| HEAT PUMP THERMOSTAT? | Y: Yes N: No |
| ELECTRIC HEAT? | |
| VAV MINIMUM POSITION CONTROL? | |
| SIMULTANEOUS HEAT / COOL? | |
| HEAT AND COOL SUPPLY RESET? | |
| HIGH EFFICIENCY? | |
| PIPE INSULATION REQUIRED? | |
| PIPE/DUCT INSULATION PROTECTED? | |
| SEALED DUCTS IN CEILING/ROOF SPACE? | |

| TIME CONTROL | SETBACK CTRL. | ISOLATION ZONES | FAN CONTROL |
|---|---|---|---|
| S: Prog. Switch<br>O: Occupancy Sensor<br>M: Manual Timer | H: Heating<br>C: Cooling<br>B: Both | Enter Number of Isolation Zones. | I: Inlet Vanes<br>P: Variable Pitch<br>V: VFD<br>O: Other C: Curve |

| VENTILATION | OUTDOOR DAMPER | ECONOMIZER | O.A. CFM |
|---|---|---|---|
| B: Air Balance<br>C: Outside Air Cert.<br>M: Out. Air Measure<br>D: Demand Control<br>N: Natural | A: Auto<br>G: Gravity | A: Air<br>W: Water<br>N: Not Required<br>EC: Economizer Control See Section 144(e)3 | Enter Outdoor Air CFM.<br>Note: This shall be no less than Col. H on MECH-3. |

NOTES TO FIELD - For Building Department Use Only

Run Initiation Time: 04/20/04 09:36:37 Run Code: 1082478997



# ENVELOPE MANDATORY MEASURES — ENV-MM

PROJECT NAME: SCIENCE BUILDING - LOS MEDANOS COLLEGE — DATE: 4/20/2004

| | | DESCRIPTION | Designer | Enforcement |
|---|---|---|---|---|
| [X] | 118(a) | Installed Insulating Material shall have been certified by the manufacturer to comply with the California Quality Standards for insulating material, Title 20, Chapter 4, Article 3. | | |
| [X] | 118(c) | All Insulating Materials shall be installed in compliance with the flame spread rating and smoke density requirements of Sections 2602 and 707 of Title 24, Part 2. | | |
| [X] | 117(a) | All Exterior Joints and openings in the building that are observable sources of air leakage shall be caulked, gasketed, weatherstripped or otherwise sealed. | | |
| [X] | 116(b) | Site Constructed Doors, Windows and Skylights shall be caulked between the unit and the building, and shall be weatherstripped (except for unframed glass doors and fire doors). | | |
| [X] | 116(a)1 | Manufactured Doors and Windows installed shall have air infiltration rates not exceeding those shown in Table Number 1-E. of the Standards. Manufactured fenestration products must be labeled for U-value according to NFRC procedures. | | |
| [X] | 118(e) | Demising Walls in Nonresidential Buildings: The opaque portions of framed demising walls in nonresidential buildings shall have insulation with an installed R-value of no less than R-11 between framing members. | | |



# MECHANICAL MANDATORY MEASURES — Part 1 of 2 — MECH-MM

PROJECT NAME: SCIENCE BUILDING - LOS MEDANOS COLLEGE — DATE: 4/20/2004

| | | DESCRIPTION | Designer | Enforcement |
|---|---|---|---|---|
| | | **Equipment and Systems Efficiencies** | | |
| [X] | 111 | Any appliance for which there is a California standard established in the Appliance Efficiency Regulations will comply with the applicable standard. | | |
| [ ] | 115(a) | Fan type central furnaces shall not have a pilot light. | | |
| [X] | 123 | Piping, except that conveying fluids at temperatures between 60 and 105 degrees Fahrenheit, or within HVAC equipment, shall be insulated in accordance with Standards Section 123. | | |
| [X] | 124 | Air handling duct systems shall be installed and insulated in compliance with Sections 601, 603 and 604 of the Uniform Mechanical Code. | | |
| | | **Controls** | | |
| | 122(e) | Each space conditioning system shall be installed with one of the following: | | |
| [X] | 122(e)1A | Each space conditioning system serving building types such as offices and manufacturing facilities (and all others not explicitly exempt from the requirements of Section 112 (d)) shall be installed with an automatic time switch with an accessible manual override that allows operation of the system during off-hours for up to 4 hours. The time switch shall be capable of programming different schedules for weekdays and weekends and have program backup capabilities that prevent the loss of the device's program and time setting for at least 10 hours if power is interrupted; or | | |
| [ ] | 122(e)1B | An occupancy sensor to control the operating period of the system; or | | |
| [X] | 122(e)1C | A 4-hour timer that can be manually operated to control the operating period of the system. | | |
| [X] | 122(e)2 | Each space conditioning system shall be installed with controls that temporarily restart and temporarily operate the system as required to maintain a setback heating and/or a setup cooling thermostat setpoint. | | |
| [ ] | 122(g) | Each space conditioning system serving multiple zones with a combined conditioned floor area more than 25,000 square feet shall be provided with isolation zones. Each zone: shall not exceed 25,000 square feet; shall be provided with isolation devices, such as valves or dampers, that allow the supply of heating or cooling to be setback or shut off independently of other isolation areas; and shall be controlled by a time control device as described above. | | |
| [X] | 122(a&b) | Each space conditioning system shall be controlled by an individual thermostat that responds to temperature within the zone. Where used to control heating, the control shall be adjustable down to 55 degrees F or lower. For cooling, the control shall be adjustable up to 85 degrees F or higher. Where used for both heating and cooling, the control shall be capable of providing a deadband of at least 5 degrees F within which the supply of heating and cooling is shut off or reduced to a minimum. | | |
| [X] | 122(c) | Thermostats shall have numeric setpoints in degrees Fahrenheit (F) and adjustable setpoint stops accessible only to authorized personnel. | | |
| [ ] | 112(b) | Heat pumps shall be installed with controls to prevent electric resistance supplementary heater operation when the heating load can be met by the heat pump alone. | | |



# MECHANICAL MANDATORY MEASURES — Part 2 of 2 — MECH-MM

PROJECT NAME: SCIENCE BUILDING - LOS MEDANOS COLLEGE — DATE: 4/20/2004

| | | Description | Designer | Enforcement |
|---|---|---|---|---|
| | | **Ventilation** | | |
| [X] | 121(e) | Controls shall be provided to allow outside air dampers or devices to be operated at the ventilation rates as specified on these plans. | | |
| [ ] | 122(f) | Gravity or automatic dampers interlocked and closed on fan shutdown shall be provided on the outside air intakes and discharges of all space conditioning and exhaust systems. | | |
| [ ] | 122(f) | All gravity ventilating systems shall be provided with automatic or readily accessible manually operated dampers in all openings to the outside, except for combustion air openings. | | |
| [ ] | 121(f)1 | Air Balancing: The system shall be balanced in accordance with the National Environmental Balancing Bureau (NEBB) Procedural Standards (1983), or Associated Air Balance Council (AABC) National Standards (1989); or | | |
| [X] | 121(f)2 | Outside Air Certification: The system shall provide the minimum outside air as shown on the mechanical drawings, and shall be measured and certified by the installing licensed C-20 mechanical contractor and certified by (1) the design mechanical engineer, (2) the installing licenced C-20 mechanical contractor, or (3) the person with overall responsibility for the design of the ventilation system; or | | |
| [ ] | 121(f)3 | Outside Air Measurement: The system shall be equipped with a calibrated local or remote device capable of measuring the quantity of outside air on a continuous basis and displaying that quantity on a readily accessible display divice; or | | |
| [ ] | 121(f)4 | Another method approved by the Commission. | | |
| | | **Service Water Heating Systems** | | |
| [ ] | 113(b)2 | If a circulating hot water system is installed, it shall have a control capable of automatically turning off the circulating pump(s) when hot water is not required. | | |
| [ ] | 113(b)3B | Lavatories in restrooms of public facilities shall be equipped with controls to limit the outlet temperature to 110 degrees F. | | |
| [ ] | 113(b)3C | Lavatories in restrooms of public facilities shall be equipped with one of the following:<br>Outlet devices that limit the flow of hot water to a maximum of 0.5 gallons per minute.<br>Foot actuated control valves, and outlet devices that limit the flow of hot water to a maximum of 0.75 gallons per minute.<br>Proximity sensor actuated control valves, and outlet devices that limit the flow of hot water to a maximum of 0.75 gallons per minute.<br>Self-closing valves, and outlet devices that limit the flow of hot water to a maximum of 2.5 gallons per minute, and 0.25 gallons/cycle (circulating system).<br>Self-closing valves, and outlet devices that limit the flow of hot water to a maximum of 2.5 gallons per minute, and 0.50 gallons/cycle (non-circulating system).<br>Self-closing valves, and outlet devices that limit the flow of hot water to a maximum of 2.5 gallons per minute, and 0.75 gallons/cycle (foot switches and proximity sensor controls). | | |



tBP
architecture planning interiors management

LICENSED ARCHITECT — RICHARD A. MANGUM, AIA. — NO. C-8665 — REN. 12-31-05 — STATE OF CALIFORNIA

tBP/Architecture
1000 Burnett Avenue, Suite 140
Concord, CA 94520
p: 925.246.6419 f: 925.246.6495

architect

REGISTERED PROFESSIONAL ENGINEER — DAVID A. WESTON — No. M31220 — EXPIRES 12/31/05 — MECHANICAL — STATE OF CALIFORNIA

AINSWORTH ASSOCIATES
MECHANICAL ENGINEERS
SACRAMENTO, CA
JOB: 2003-003

consultant

IDENTIFICATION STAMP
DIV. OF THE STATE ARCHITECT
OFFICE OF REGULATION SERVICES
APPL. # 01-106226
AC FLS SS
DATE 1-12-05

name
address
city, state, zip
ph: fx:

agency

SCIENCE BUILDING
LOS MEDANOS COLLEGE
Contra Costa Community College District

owner

tBP project number : 20241.00
file name:
drawn by: checked by:
date: NOVEMBER 15, 2004

| Rev. | date: | description: |
|---|---|---|
| | | |

drawing title:
**TITLE 24-MECHANICAL & ENVELOPE TITLE 24 DOCUMENTS**

LMC SCIENCE 313-023-112.01-0-00.00
drawing no.: **M0.5**
drawing of ?

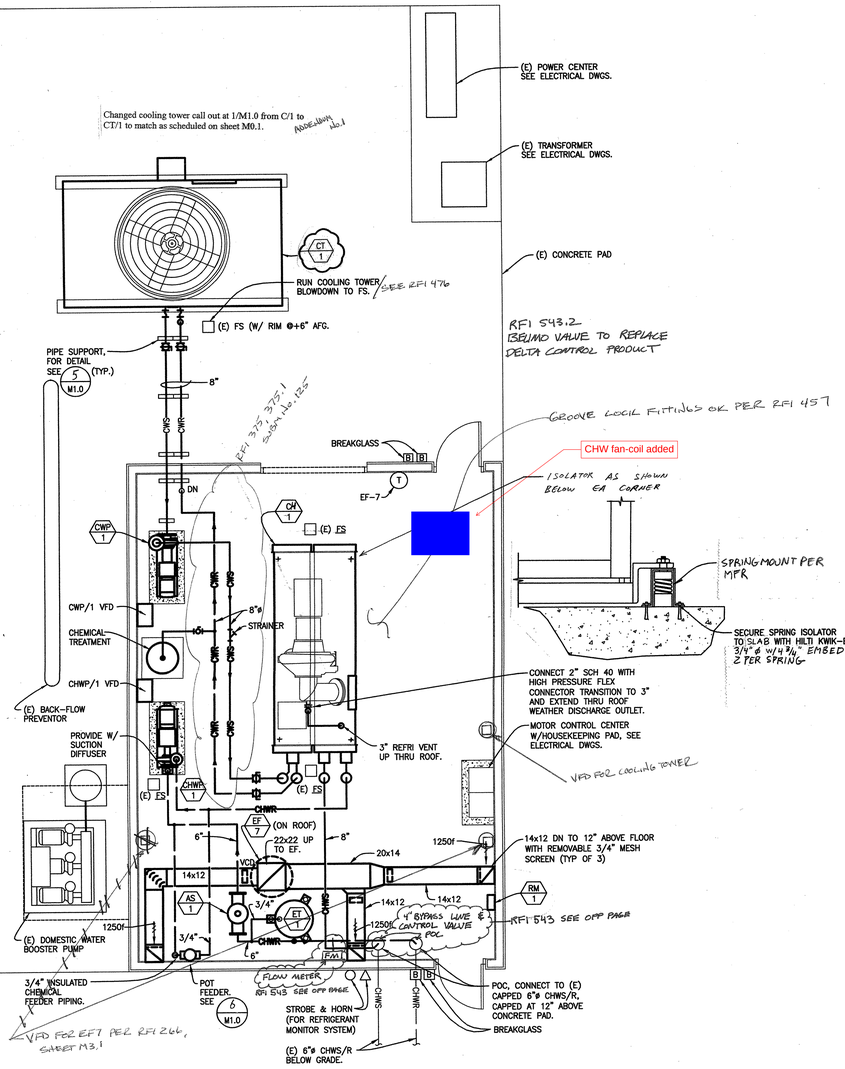


## AIR CONDITIONING - MECHANICAL/CHILLER/PUMP BUILDING (1 / M1.0)

SCALE: 1/4"=1'-0"

NOTES:

1. OUTSIDE EACH CHILLER EXIT DOOR PROVIDE THE FOLLOWING PER CMC 1108.5 AND CMC 1109.4:
   - BREAKGLASS TYPE ON ONLY SWITCH TO START PURGE EXHAUST FAN IF NOT ON MANUAL RESET.
   - BREAKGLASS TYPE OFF ONLY CONTROL FOR ALL EQUIPMENT IN THE CHILLER ROOM THAT IS NOT REQUIRED FOR PURGE OPERATION. AUTOMATIC ACTIVATION OF SHUT OFF ALSO REQUIRED WHEN REFRIGERANT MONITOR ALARMS.

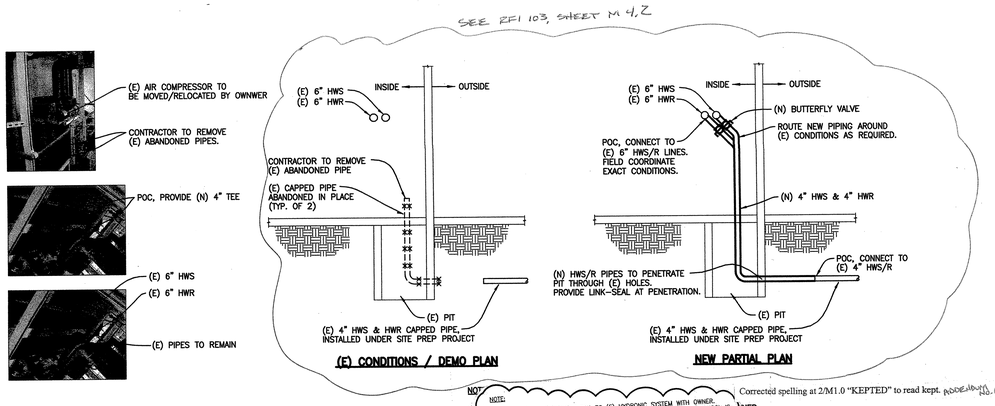


NOTE: CONTRACTOR TO COORDINATE POC TO (E) HYDRONIC SYSTEM WITH OWNER. DOWNTIME SHALL BE KEPT TO A MINIMUM AND SHALL OCCUR WHILE SCHOOL IS NOT IN SESSION (I.E.: SUMMER BREAK, SPRING BREAK, ETC.)

Corrected spelling at 2/M1.0 "KEPTED" to read kept. ADDENDUM No.1

## AIR CONDITIONING - PARTIAL PLAN - HWS/HWR CONNECTION TO EXISTING DETAILS (2 / M1.0)

NO SCALE

SEE RFI 415

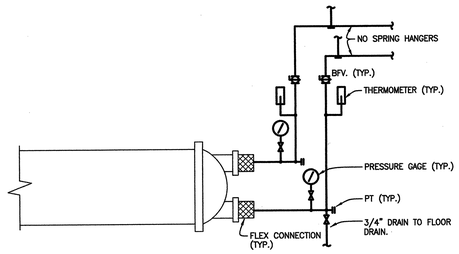


NOTES: 1. CONDENSER SIMILAR, OFFSET PIPING TO ALLOW HEAD REMOVAL.

## EVAPORATOR/ PIPING CONNECTION DETAIL (2 / M1.0)

NO SCALE

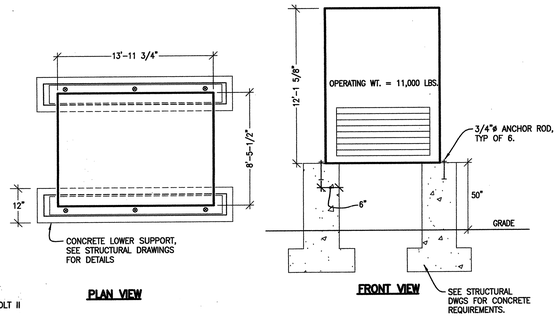


## COOLING TOWER DETAIL (3 / M1.0)

NO SCALE

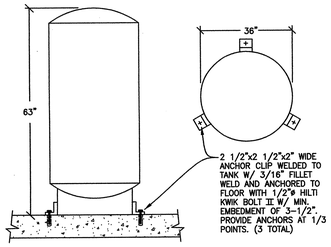


## EXPANSION TANK ANCHORAGE DETAIL (4 / M1.0)

NO SCALE

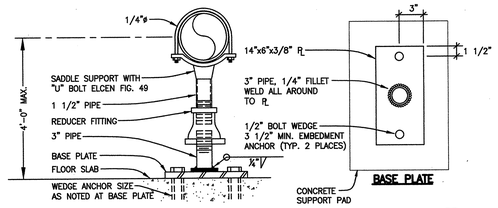


## PIPE SUPPORT DETAIL (5 / M1.0)

NO SCALE

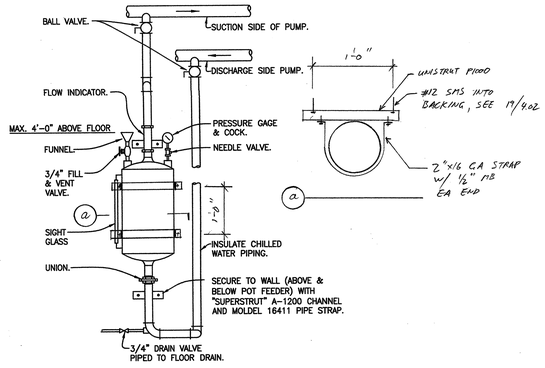


## CHEMICAL POT FEEDER DETAIL (6 / M1.0)

NO SCALE

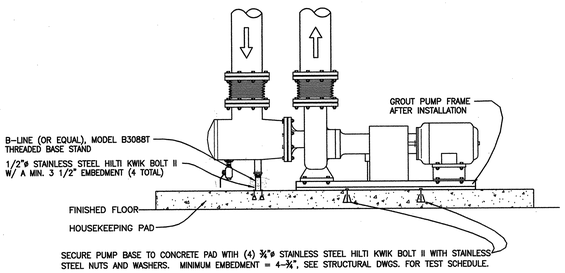


## PUMP SUPPORT DETAIL (7 / M1.0)

NO SCALE

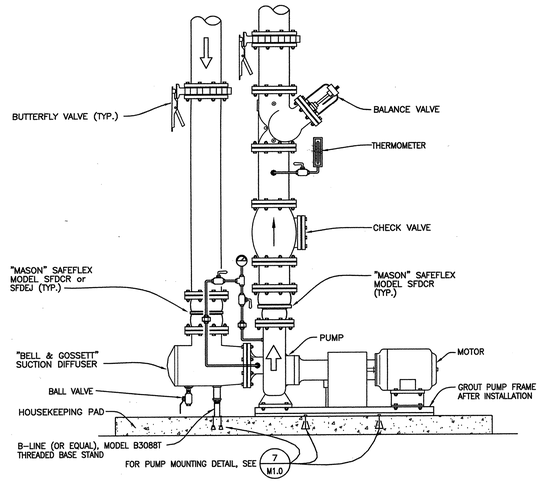


NOTE: 1. "MASON" SAFEFLEX MODEL SFDCR OR SFDEJ TO BE COORDINATED WITH PIPE SIZES SUCTION AND DISCHARGE SIZES.

## CHILLED WATER PUMP PIPING DETAIL (8 / M1.0)

NO SCALE

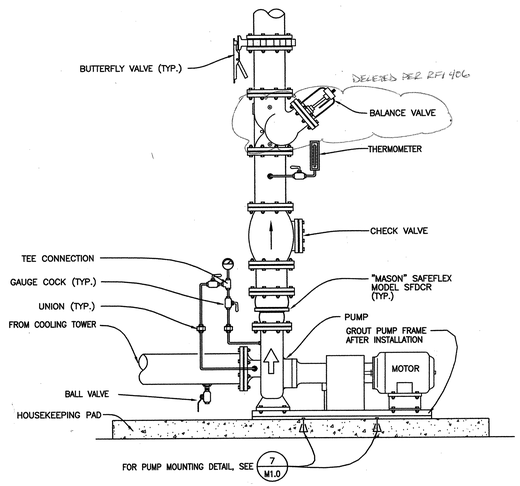


## CONDENSER WATER PUMP PIPING DETAIL (9 / M1.0)

NO SCALE


tBP/Architecture
1000 Burnett Avenue, Suite 140
Concord, CA 94520
p: 925.246.6495 f: 925.246.6495


architecture planning interiors management

architect

AINSWORTH ASSOCIATES
MECHANICAL ENGINEERS
SACRAMENTO, CA
JOB: 2005-005

consultant

DSA-SS/CC
APPL # 49-H9205
DATE 11-15-04

name
address
city, state, zip
ph: fx:

agency

SCIENCE BUILDING
LOS MEDANOS COLLEGE

Contra Costa Community College District

owner

tBP project number : 20247.00
file name:
drawn by: checked by:
date: NOVEMBER 15, 2004

| Rev: | date: | description: |
|---|---|---|

drawing title:
AIR CONDITIONING - MECHANICAL/CHILLER/PUMP BUILDING AND DETAILS

LMC SCIENCE 313-023-112.01-0-00.00
drawing no.: M1.0
drawing of ?

**S. J. AMOROSO**
**Request For Information/Clarification**

**DSA FILE NO. 7-C1**
**DSA APPL. No. 01-106226**

To: tBP/Architecture
1000 Burnett Ave, Suite 140
Concord, CA 94520

Attn: Celia Chiang, Tom Beckett
Fax: 925-246-6495

Project: LOS MEDANOS COLLEGE
SCIENCE BUILDING
Contra Costa Community College District

tBP p/n: 20247.00

Subj.: HVAC conflict 1st floor- 38"SA duct & beam
Reference (dwg, spec): M1.2, S2.2.1

RFI No: **66.1**
Subcontractor RFI: Monterey 02

Reply Requested By: 1/27/06

Date: 1/23/06

INFORMATION REQUESTED:
*Original question in RFI No. 66:*
*In the process of detailing HVAC for underside of the second floor, we have identified the following conflict between HVAC duct and structural steel. On sheet M1.2, at approximately 4.8 line the 38" branch near the 38" SA duct take off conflicts with the western LBJ beam which frames the opening as shown on sheet S2.2.1. Note that ceilings are typically at 10'-0" height. Please advise.*
Upon review of the response to RFI No. 66, it does not appear that the response is correct. Per Monterey, "Have do you big a 52"x20" wide duct into either a 36" round or 48" oval duct without using a transition that would need to be 48"x20" excluding insulation or flow that will be an add of static pressure?" Please provide a drawing of this design change. Is there a recessed mention light and projector screen interference? Please provide a drawing of this design change."

SUGGESTED SOLUTION: None.

Cost Impact: ☐ Schedule Impact: ☐ days By: Mark Delgado

RESPONSE: DATE:

| Direction | 1/23/2006 2:36:49 PM |
|---|---|
| See attached slaidshov for recommended duct routing / changes.<br>For light and projector screen interference, recommend spearing ductwork similar to detail 10, sheet S.02<br><br>Note that actual amount of ductwork has not increased (actual size has decreased). | |

Attachments: By:

TRANSMITTAL RECORD:

| FROM | TO | DATE |
|---|---|---|
| S.J. AMOROSO | tBP / ARCHITECTURE | 1/23/06 1/25/06 |
| tBP / ARCHITECTURE | ENGINEER/CONSULTANT | 1/25/06 |
| ENGINEER/CONSULTANT | tBP / ARCHITECTURE | 1/27/06 |

**RFI # 000**
**Page 1**

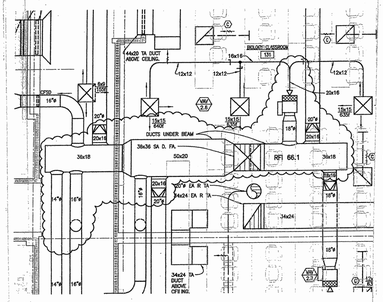


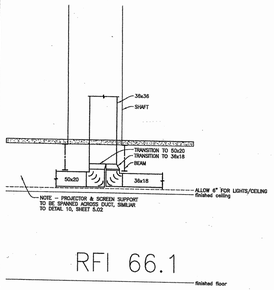


CC: DONUBE
: RCM

**S. J. AMOROSO**
**Request For Information/Clarification**

**DSA FILE NO. 7-C1**
**DSA APPL. No. 01-106226**

To: tBP/Architecture
1000 Burnett Ave, Suite 140
Concord, CA 94520

Attn: Celia Chiang, Tom Beckett
Fax: 925-246-6495

Project: LOS MEDANOS COLLEGE
SCIENCE BUILDING
Contra Costa Community College District

tBP p/n: 20247.00

Subj.: HVAC conflict 1st floor- 20" EA duct conflicts with 34x24 duct at 4.9 line
Reference (dwg, spec): M1.2, S2.2.1

RFI No: **72**
Subcontractor RFI: Monterey 02

Reply Requested By: 1/10/06

INFORMATION REQUESTED:
In the process of detailing HVAC for underside of the second floor, we have identified the following conflict between HVAC duct and structural steel. On sheet M1.2, at approximately 4.9 line, the 20" EA duct at G.4 line is in conflict with the 34x24 duct at 4.9 line. Please advise.

Date: 1/3/06

SUGGESTED SOLUTION: None.

Cost Impact: ☐ Schedule Impact: ☐ days By: Mark Delgado

RESPONSE: DATE:

Attachments: By:

TRANSMITTAL RECORD:

| FROM | TO | DATE |
|---|---|---|
| S.J. AMOROSO | tBP / ARCHITECTURE | 1/3/06 |
| tBP / ARCHITECTURE | ENGINEER/CONSULTANT | |
| ENGINEER/CONSULTANT | tBP / ARCHITECTURE | |
| tBP / ARCHITECTURE | S.J. AMOROSO | |
| S.J. AMOROSO | ORIGINATOR | |

**RFI # 000**
**Page 1**

## Summary of Comments on To:

Page: 1

Sequence number: 1
Author: Donelson
Date: 12/6/2006
Date: 12/6/2006 4:43:08 PM
Recommend re-routing the 20" diameter exhaust air duct to avoid conflict.
See attached for re-routing. Contractor to show re-routing within shop drawings for review.

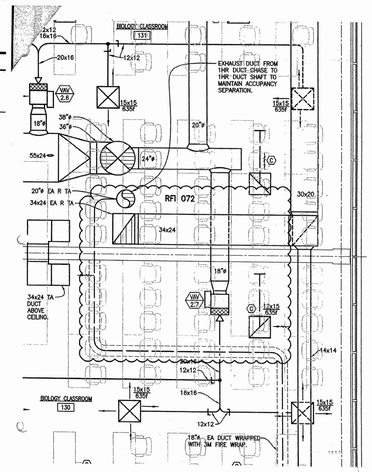


**S. J. AMOROSO**
**Request For Information/Clarification**

**DSA FILE NO. 7-C1**
**DSA APPL. No. 01-106226**

To: tBP/Architecture
1000 Burnett Ave, Suite 140
Concord, CA 94520

Attn: Celia Chiang, Tom Beckett
Fax: 925-246-6495

Project: LOS MEDANOS COLLEGE
SCIENCE BUILDING
Contra Costa Community College District

tBP p/n: 20247.00

Subj.: HVAC conflict 2nd floor- ELP 2.3 conflict with light and radio tap
Reference (dwg, spec): M1.2, S2.2.1

RFI No: **74.1**
Subcontractor RFI: Monterey 02

Reply Requested By: 1/27/06

Date: 1/27/06

INFORMATION REQUESTED:
We have received the response to RFI No. 74 and forwarded the same to our subcontractor and mechanical engineer. Upon review of the response, it appears that the response seems to address this issue, but they cannot confirm its validity without a drawing of the response. Please provide a drawing of this design change. Please advise.

SUGGESTED SOLUTION: None.

Cost Impact: ☐ Schedule Impact: ☐ days By: Mark Delgado

RESPONSE: DATE:

| Direction | 1/27/2006 2:12:27 PM |
|---|---|
| See attachment with sketch and does not appear to be a conflict.<br>1. Relocate light fixture.<br>2. Relocate projector if mounting to be recessed or drop mounting. | |

Attachments: By:

TRANSMITTAL RECORD:

| FROM | TO | DATE |
|---|---|---|
| S.J. AMOROSO | tBP / ARCHITECTURE | 1/27/06 1/27/06 |
| tBP / ARCHITECTURE | ENGINEER/CONSULTANT | 1/27/06 |
| ENGINEER/CONSULTANT | tBP / ARCHITECTURE | 1/27/06 |
| tBP / ARCHITECTURE | S.J. AMOROSO | 1/27/06 |
| S.J. AMOROSO | ORIGINATOR | 1/27/06 |

CC: DONUBE
RCM
EW 06277

**RFI # 000**
**Page 1**

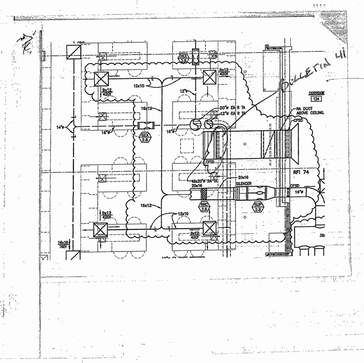


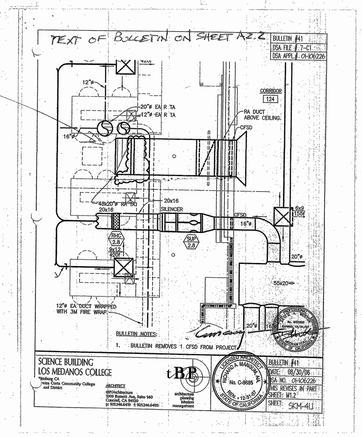


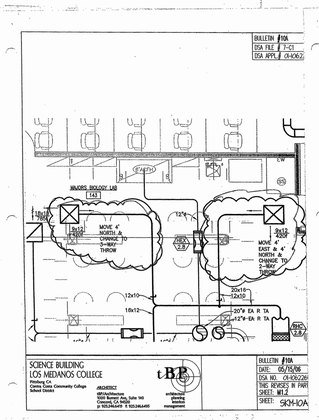


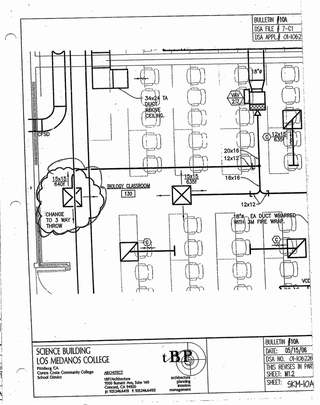


Los Medanos College
4CD Proj. #: L-565-B-23-SC
**Science Building**

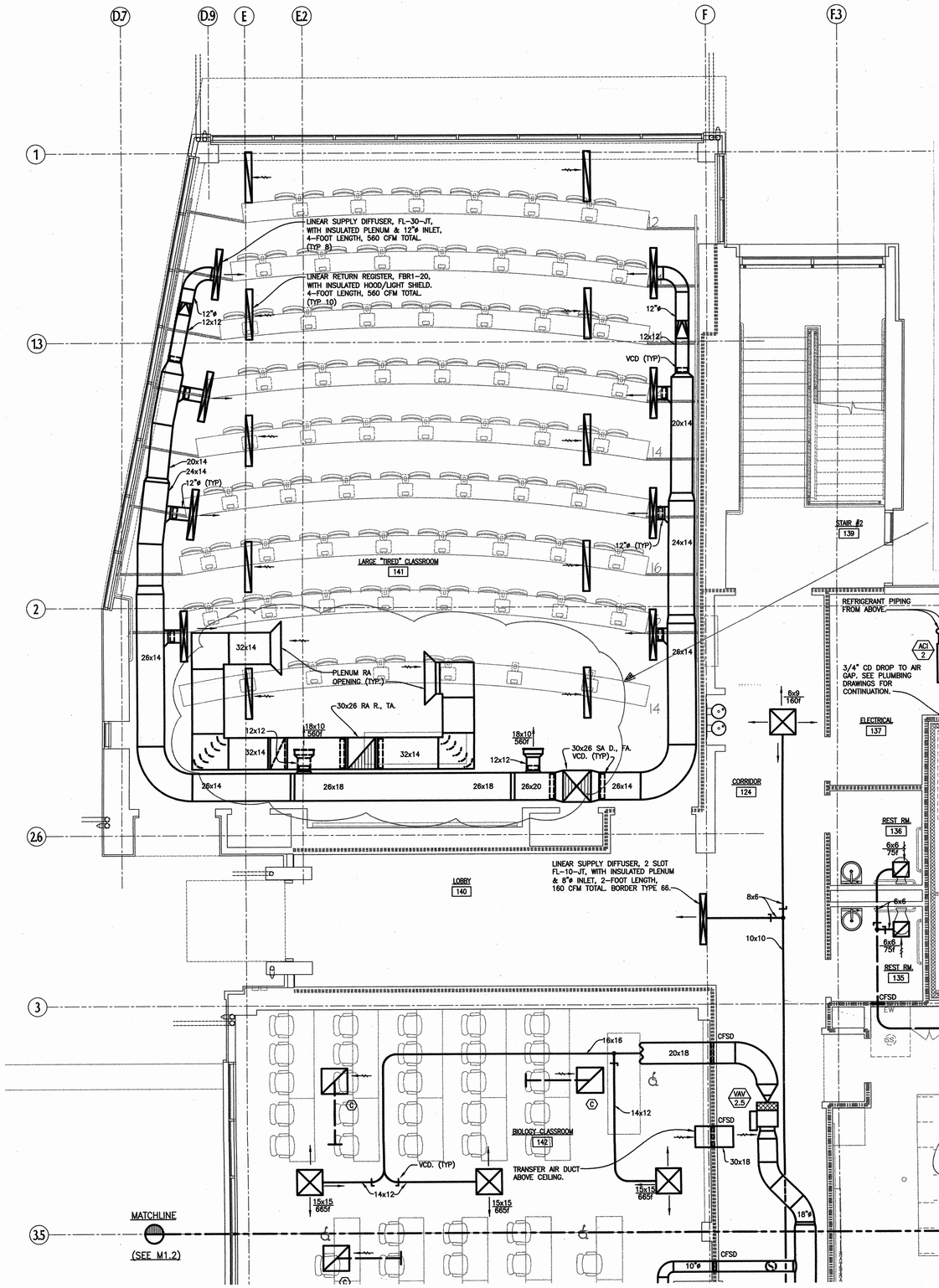


## AIR CONDITIONING - 1ST FLOOR - PARTIAL PLAN

SCALE: 1/4"=1'-0"

1 / M1.1

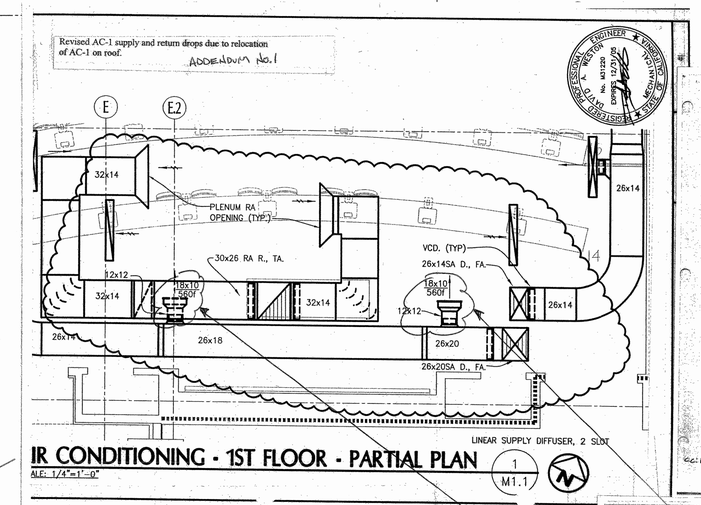


## IR CONDITIONING - 1ST FLOOR - PARTIAL PLAN

SCALE: 1/4"=1'-0"

1 / M1.1

**S. J. AMOROSO**
**Request For Information/Clarification**

DSA FILE NO. 7-C1
DSA APPL. No. 01-106226

To: tBP/Architecture, 1000 Burnett Ave, Suite 140, Concord, CA 94520
Attn: Celia Chiang, Tom Beckett
Fax: 925-246-6495
Sub.: 1st Floor Lecture Hall HVAC Issues
Reference (dwg, spec): M1.1, M4.1
Reply Requested By: 2/10/06

Project: LOS MEDANOS COLLEGE SCIENCE BUILDING, Contra Costa Community College District
tBP p/n: 20247.00
RFI No: 122
Subcontractor RFI# Monterey 5
Date: 2/3/06

INFORMATION REQUESTED:
Please note the attached Monterey Mechanical RFI No. 5 regarding HVAC issues in the Lecture Hall Room 141.

1. M1.1 shows (2) 18"x10" side wall supply air registers fed by the main supply north of 2.6 line. There is no wall where those registers are located.
2. Plans show 12"ø supply ductwork piping entering classroom #141 north of 2.6 line and west of F line, but could up and through the roof by AC-1. This piping will be exposed.
3. Location of the T-Stat for AC-1 is show in the closet.

Please advise and provide a sketch if necessary.

SUGGESTED SOLUTION:

Cost Impact: ☐ Schedule Impact: ☐ days By: Mark Delgado

RESPONSE: DATE:

Author: dmeaker
Date: 2/6/06
Date: 2/6/2006 8:16:21 AM
Responses as follows:
1. Revise 18"x10" side wall registers to linear diffusers - see attached sketch for details.
2. Piping to be run concealed above the ceiling. Provide a 4" beam penetration at F line. At beam penetration, decrease piping size to 12"ø (typ.). Reference attachments for structural requirements and architectural section.
3. T-stat is shown on drawings M-1; however, see attachment for revised location.

Attachments:

By:

TRANSMITTAL RECORD:

| FROM | TO | DATE |
|---|---|---|
| S.J. AMOROSO | tBP / ARCHITECTURE | 2/3/06 |
| tBP / ARCHITECTURE | ENGINEER/CONSULTANT | 2/3/06 |
| ENGINEER/CONSULTANT | tBP / ARCHITECTURE | 2/6/06 |
| tBP / ARCHITECTURE | S.J. AMOROSO | 2/6/06 |
| S.J. AMOROSO | ORIGINATOR | |

RFI # 000
Page 1

cc: Roscoe

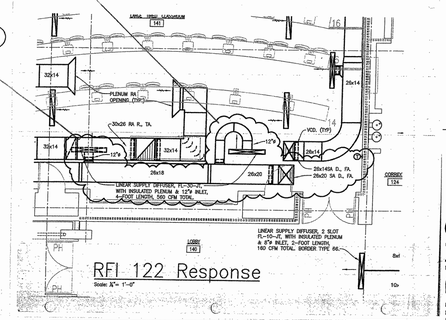


RFI 122 Response

Scale: 3/4" = 1'-0"

## WALL TYPES -

(FOR REFERENCE ONLY. WALL TYPES ON ARCHITECTURAL DRAWINGS SHALL TAKE PRECEDENCE.)

1-HR FIRE RATED ASSEMBLY

1-HR FIRE RATED ASSEMBLY (OCCUPANCY SEPARATION)

2-HR FIRE RATED ASSEMBLY (AT CHEMICAL WASTE STORAGE ONLY)

STUD PARTITION
REFER TO SHEET 4.02 FOR PARTITION TYPES

## KEY PLAN

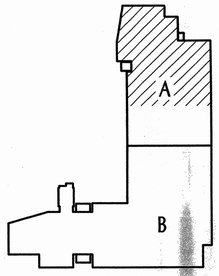



tBP
architecture
planning
interiors
management

tBP/Architecture
1000 Burnett Avenue, Suite 140
Concord, CA 94520
p: 925.246.6495 f: 925.246.6495

architect

AINSWORTH ASSOCIATES
MECHANICAL ENGINEERS
SACRAMENTO, CA
L-25-2002-003

consultant


CONSTRUCTION STAMP
DIV. OF THE STATE ARCHITECT
OFFICE OF REGULATION SERVICES
APPL. - 01-106226
ACCEPTED
DATE 11-15-05

name
address
city, state, zip
p/f:
agency

# SCIENCE BUILDING
# LOS MEDANOS COLLEGE

Contra Costa Community College District

owner

tBP project number : 20247.00
file name:
drawn by: checked by:
date: NOVEMBER 15, 2004

| Rev: | date: | description: |
|---|---|---|

drawing title:
**AIR CONDITIONING - 1ST FLOOR - PARTIAL PLAN**

LMC SCIENCE 313-023-112.01-0-00.00
drawing no:
**M1.1**
drawing of ?

L:\2025-003\NEW\M1-1-dwg Thes,Nov10,2004-03:43pm

**S. J. AMOROSO**
**Request For Information/Clarification**

**DSA FILE NO. 7-C1**
**DSA APPL. No. 01-106226**

To: IBP/Architecture, 1000 Burnett Ave., Suite 140, Concord, CA 94520
Attn: Celia Chiang, Tom Beckett
Fax: 925-246-6495
Subj.: HVAC control 1st floor SF RA duct, OSFD-2 RFI No: 76.1
Reference (dwg, spec): M1.3.
Subcontractor RFI: Montana 12

Project: LOS MEDANOS COLLEGE SCIENCE BUILDING Contra Costa Community College District
IBP p/n: 20247.00

Reply Requested By: 1/22/06

INFORMATION REQUESTED: Date: 1/12/06
Original question in RFI No. 75:
Please provide a detail showing the proper underside of the normal floor, we have identified the following: ceiling cavities (note: dual spot structure also). On sheet M1.3, the OSFD for the 24" RA duct at line 7.5 and line F.3 is the well between the corridor and room 128 with the ceiling at 9'-0". The 24" RA duct is shown on the plan at line 7.5 and line F.3 down into the ceiling. Very there is not enough mechanical room for the OSFD shown and the dual duct. Please advise.

We have forwarded the response to RFI No. 75 to our mechanical subcontractor and detailed and they are requesting a drawing of this design change to clarify the RFI response. Please provide a detailed response.

SUGGESTED SOLUTION: None

Cost Impact: ☐ Schedule Impact: ☐ days By/ Work Delayed:

RESPONSE: DATE: 1/23/06
Reviewed by: 1/23/06 9:41:28 PS
Responses as follows:
1. Refer to attached response to the removal of units by OSA REQUEST BY RFI #75.
2. See attached for duct sizing. Note: duct sizes on attached drawing affect the pressure regimes so we had to do a re-balance. Architect/contractor/engineer can pay for manpower to reprint plans. Plan and routing to be reviewed when drop is complete.

Dave Newton/AMMB By:

TRANSMITTAL RECORD:

| FROM | TO | DATE |
|---|---|---|
| S. J. AMOROSO | IBP / ARCHITECTURE | 1/23/06 |
| IBP / ARCHITECTURE | MEADHUNT / ENGIN. ASST. | 1/23/06 |
| MEADHUNT / ENGIN. ASST. | IBP / ARCHITECTURE | 1/23/06 |
| IBP / ARCHITECTURE | S. J. AMOROSO | 1/23/06 |
| S. J. AMOROSO | ORIGINATOR | |

RFI # 000
Page 1

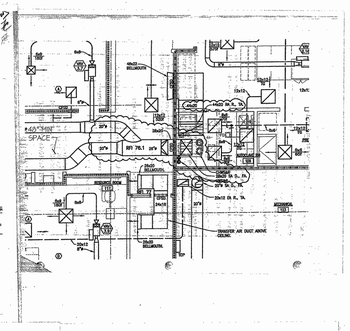


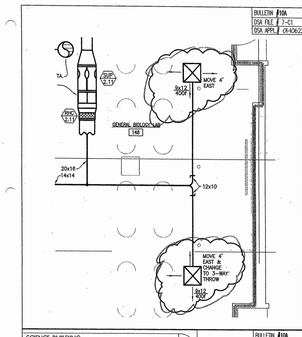


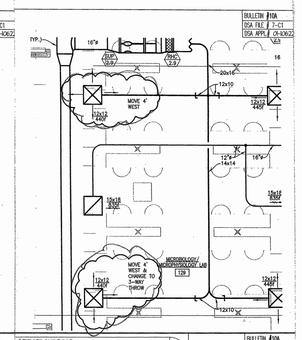


**S. J. AMOROSO**
**Request For Information/Clarification**

**DSA FILE NO. 7-C1**
**DSA APPL. No. 01-106226**

To: IBP/Architecture, 1000 Burnett Ave., Suite 140, Concord, CA 94520
Attn: Celia Chiang, Tom Beckett
Fax: 925-246-6495
Subj.: Venting of corrosives storage cabinets RFI No: 315
Reference (dwg, spec.): LF 1-02, Subcontractor RFI:

Project: LOS MEDANOS COLLEGE SCIENCE BUILDING Contra Costa Community College District
IBP p/n: 20247.00

Reply Requested By: 8/21/06

INFORMATION REQUESTED: Date: 8/14/06

Per details on sheet LF1-02, there is a vent connected to building exhaust systems at corrosives storage base cabinets and acid/base storage base cabinets. Per review of the LF drawings, these types of cabinets occur in the following locations:
1. An island in room 125.
2. The west wall of room 145
3. The north wall of room 148
4. The west wall of room 235.

On sheet M1.2, a connection to the HVAC system is shown for item 3 above. No similar connection is shown on the contract drawings for the remaining 3 locations. Please advise.

SUGGESTED SOLUTION:
Cost Impact: ☐ Schedule Impact: ☐ days By: Bryan Newman

RESPONSE: DATE:

Response as follows:

1) Room 125 - See attached sketch for mechanical connections.
2) Room 145 - No changes required - reference sheet M1.2 for connection(s).
3) Room 148 - Refer to General Note E18/Sheet LF1-20.
4) Room 235 - Refer to sheet LF1-02 - CS cabinet below fume hoods to have 3" diameter vent through bench-top behind baffle (extend 4" above bench-top).

Dave Newton/AMMB
8/29/06

RFI # 000
Page 1

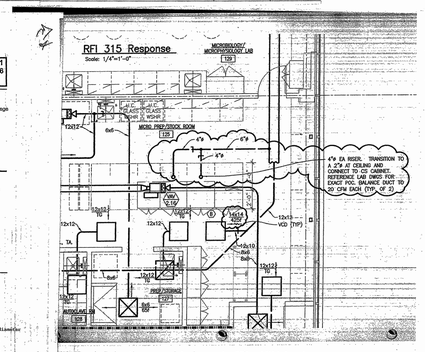


**S. J. AMOROSO**
**Request For Information/Clarification**

**DSA FILE NO. 7-C1**
**DSA APPL. No. 01-106226**

To: IBP/Architecture, 1000 Burnett Ave, Suite 140, Concord, CA 94520
Attn: Celia Chiang, Tom Beckett
Fax: 925-246-6495
Subj.: Venting of corrosives storage cabinets RFI No: 315.1
Reference (dwg, spec.): LF 1-02, Subcontractor RFI:

Project: LOS MEDANOS COLLEGE SCIENCE BUILDING Contra Costa Community College District
IBP p/n: 20247.00

Reply Requested By: 9/21/06

INFORMATION REQUESTED: Date: 9/14/06

Per response to RFI 315, the island in room 125 is to be vented to the "regular" building exhaust system with standard material ducting. Please confirm that this is correct (i.e. the vented gases won't pose a corrosive problem for the duct and fans).

Per response to RFI 315, the corrosive cabinets in rooms 148 and 235 are to be vented to nearby fume hoods. Please indicate what material should be used for this piping.

SUGGESTED SOLUTION:
Cost Impact: ☐ Schedule Impact: ☐ days By: Bryan Newman

RESPONSE: DATE:

Per previous discussions with RFD, venting this to general exhaust is acceptable, therefore, part 1 of the RFI is confirmed as correct.

As for the material -see response per RFD.

David Weston/AMMB - 9/21/06

The piping material should be PVC.

Richard H. Cato/RFD - 9/21/06

RFI # 000
Page 1

TEXT OF BULLETIN ON SHEET A2.2

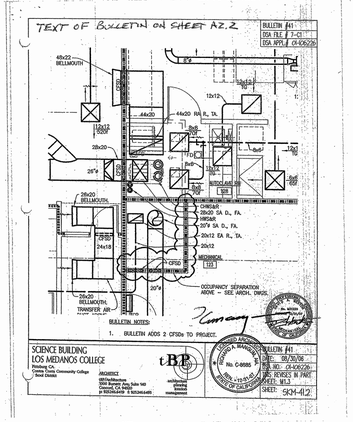


Los Medanos College
4CD Proj. #: L-565-B-23-SC
**Science Building**

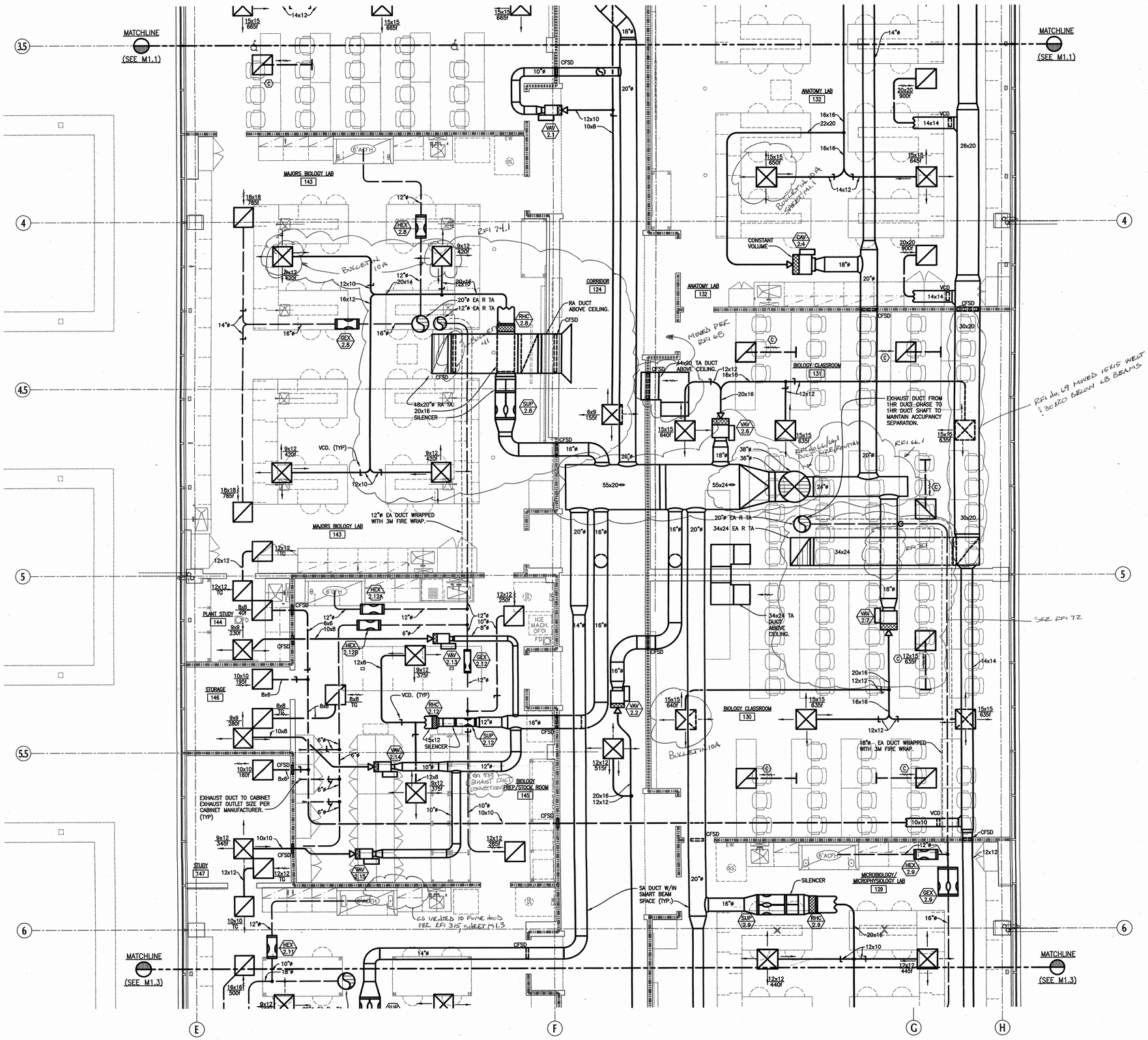


# AIR CONDITIONING - 1ST FLOOR - PARTIAL PLAN

1 / M1.2

SCALE: 1/4"=1'-0"

## WALL TYPES

(FOR REFERENCE ONLY. WALL TYPES ON ARCHITECTURAL DRAWINGS SHALL TAKE PRECEDENCE.)

1-HR FIRE RATED ASSEMBLY

1-HR FIRE RATED ASSEMBLY (OCCUPANCY SEPARATION)

2-HR FIRE RATED ASSEMBLY (AT CHEMICAL WASTE STORAGE ONLY)

STUD PARTITION
REFER TO SHEET 4.02 FOR PARTITION TYPES

## KEY PLAN

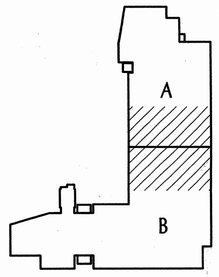


**S. J. AMOROSO**
**Request For Information/Clarification**

**DSA FILE NO. 7-C1**
**DSA APPL. No. 01-106226**

To: tBP/Architecture, 1000 Burnett Ave, Suite 140, Concord, CA 94520
Attn: Celia Chiang, Tom Beckett
Fax: 925-246-6495

Project: LOS MEDANOS COLLEGE SCIENCE BUILDING, Contra Costa Community College District
tBP p/n: 20247.00

Subj.: Transformer to power Trilatek fume hood valves
Reference (dwg, spec.): none

RFI No: **498**
Subcontractor RFI:

Reply Requested By: 3/14/07

INFORMATION REQUESTED: Date: 3/7/07

During meeting Ashcraoo has had with subcontractors to plan building start up, ConnAir has mentioned "one transformer per room to power the above-ceiling Trilatek valves in that room." This device is not shown on the contract documents nor is Amoroso able to accurately identify this device in the specifications.

Repeated requests to ConnAir to provide an informed RFI on this topic have not been answered.

We understand from ConnAir that there is one of these transformers per room. The drawback to this approach is that if any single device, AIA, fume hoods in that room would be out of transfer. The end user has indicated a preference that the valves for each fume hood be powered separately. Given that these transformers are not shown on the contract drawings, currently there is NO power to them.

One possible solution is to utilize the power that is being taken to the fume hoods themselves (there are 3 dedicated circuits to each fume hood).

As discussed with the architect, this vague RFI is being written to provide a paper trail for this topic given the lack of a detailed RFI from ConnAir.

Please advise on power to these transformers and also location of these transformers as well as if there is one per room or one per fume hood.

SUGGESTED SOLUTION:
Cost Impact: ☐ Schedule Impact: ☐ days By: Justin Warren

RESPONSE: DATE:
No exception taken to use one of the three circuits at each fume hood to power the Trilatek transformer. There will be one transformer per hood.

Jim Weaver / tBP Architecture
Richard Celis / RFD

3/15/07

**RFI # 000**

**S. J. AMOROSO**
**Request For Information/Clarification**

**DSA FILE NO. 7-C1**
**DSA APPL. No. 01-106226**

To: tBP/Architecture, 1000 Burnett Ave, Suite 140, Concord, CA 94520
Attn: Celia Chiang, Tom Beckett
Fax: 925-246-6495

Project: LOS MEDANOS COLLEGE SCIENCE BUILDING, Contra Costa Community College District
tBP p/n: 20247.00

Subj.: Transformer to power Trilatek fume hood valves and fume hood devices
Reference (dwg, spec.): none

RFI No: **498.1**
Subcontractor RFI:

Reply Requested By: 5/1/07

INFORMATION REQUESTED: Date: 4/24/07

In the response to RFI No. 498, the information given was that one of the three circuits being taken to the fume hoods can be used to power the trilatek transformer and that there is one transformer per hood.
Part A:
Please provide the circuit numbers of the circuits to be used for this purpose, at each hood.

Part B: Also, is there one transformer per hood, or is the one transformer per hood and also one transformer per Trilatek valve?

Part C: If the latter is the case, can these multiple transformers all be fed from the single circuit being designated in the response to part A of this RFI?

SUGGESTED SOLUTION:
Cost Impact: ☐ Schedule Impact: ☐ days By: Justin Warren

RESPONSE: DATE: 5/3/07
Part A: Each hood is shown on the plans with three circuits (and circuit numbers) provided. Hoods should be wired per manufacturer's recommendations, but which circuit of the three is used for what purpose in each hood (including which feeds the transformer) is not specified by us.
Part B: There is one transformer per hood.
Part C: There are already three circuits to be provided per hood, and no need to pull an additional circuit to feed the transformers.

James Cooley, Sr. Project Engineer, Michael Wall Engineering

**RFI # 000**
**Page 1**


tBP
architecture planning interiors management

tBP/Architecture
1000 Burnett Avenue, Suite 140
Concord, CA 94520
p: 925.246.6419 f: 925.246.6495
architect

AINSWORTH ASSOCIATES
MECHANICAL ENGINEERS
SACRAMENTO, CA
L25-2005-005
consultant


DEPARTMENT OF STATE ARCHITECT
DIV. OF ACCESSIBILITY COMPLIANCE
OFFICE OF REGULATION SERVICES
APPL - 01-106226
RS
DATE 11-15-05

name
address
city, state, zip
ph: fx:
agency

# SCIENCE BUILDING LOS MEDANOS COLLEGE

Contra Costa Community College District

owner

tBP project number : 20247.00
file name:
drawn by: checked by:
date: NOVEMBER 15, 2004

| Rev: | date: | description: |
|---|---|---|

drawing title:
**AIR CONDITIONING - 1ST FLOOR - PARTIAL PLAN**

LMC SCIENCE 313-023-112.01-0-00.00
drawing no:
**M1.2**
drawing of ?

J:\2003-0025\DWG\M-1.1-4.dwg Time/Now\2004-03-4:pm

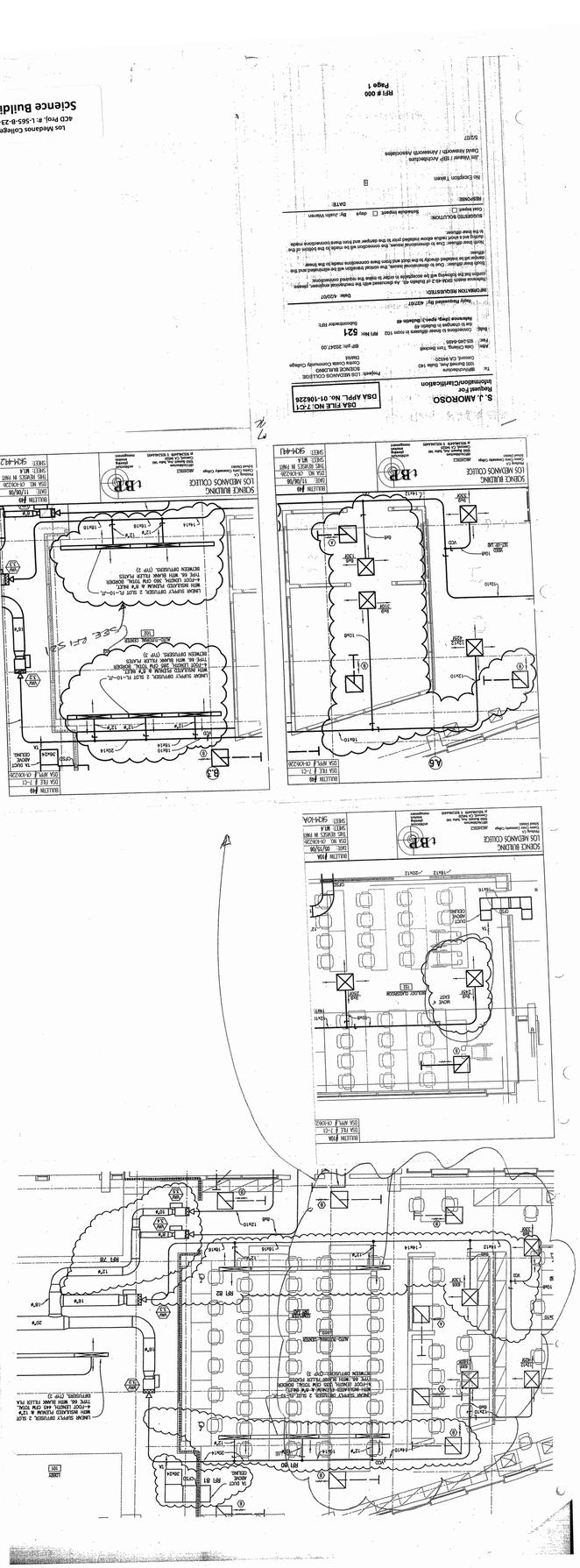

TA DUCT
ABOVE
CEILING.
RFI 81
CFSD
36x24
TA
RFI 80
LOBBY
101
VCD
14x10
12"ø
16x14
12"ø
20x14
12"ø
12x10
6x6
LINEAR SUPPLY DIFFUSER, 2 SLOT FL-10-JT,
WITH INSULATED PLENUM & 8"ø INLET,
4-FOOT LENGTH, 335 CFM TOTAL. BORDER
TYPE 66. WITH BLANK FILLER PLATES
BETWEEN DIFFUSERS. (TYP 3)
LINEAR SUPPLY DIFFUSER, 2 SLOT
WITH INSULATED PLENUM & 12"ø
4-FOOT LENGTH, 445 CFM TOTAL.
TYPE 66. WITH BLANK FILLER PLA
DIFFUSERS. (TYP 2)
VAV
3.2
12x12
425f
6X6
160f
AUTO-TUTORIAL CENTER
102
COMPUTER
DRY LAB
16"ø
20"ø
VAV
3.3
16"ø
18"ø
RFI 82
10x8
VCD
6X6
130f
6x6
12"ø
12"ø
12"ø
RFI 78
14x12
14x14
16x16
18x16
9x9
330f
8x8
12x10
8"ø
VAV
3.4
10"ø
VAV
3.5

BULLETIN #10A
DSA FILE # 7-C1
DSA APPL.# 01-10622
MOVE 4'
EAST
9x9
245f
BIOLOGY CLASSROOM
152
9x9
250f
10x8
12x10
14x12
TA
DUCT
ABOVE
CEILING
CFSD
16x16
N
16x12
20x12
12'
CFSD
SCIENCE BUILDING
LOS MEDANOS COLLEGE
Pittsburg CA
Contra Costa Community College
School District
ARCHITECT
tBP/Architecture
1000 Burnett Ave, Suite 140
Concord, CA 94520
p: 925.246.6419 f: 925.246.6495
tBP
architecture
planning
interiors
management
BULLETIN #10A
DATE: 05/15/06
DSA NO. 01-106226
THIS REVISES IN PART
SHEET: M1.4
SHEET: SKM-10A

BULLETIN #49
DSA FILE # 7-C1
DSA APPL.# 01-106226
A.6
16x10
12x10
12x12
425f
10x8
9x9
310f
10x10
6x6
130f
VIDEO
SET-UP LAB
10x8
VCD
6x6
9x9
330f
14x12
SCIENCE BUILDING
LOS MEDANOS COLLEGE
Pittsburg CA
Contra Costa Community College
School District
ARCHITECT
tBP/Architecture
1000 Burnett Ave, Suite 140
Concord, CA 94520
p: 925.246.6419 f: 925.246.6495
tBP
architecture
planning
interiors
management
BULLETIN #49
DATE: 11/06/06
DSA NO. 01-106226
THIS REVISES IN PART
SHEET: M1.4
SHEET: SKM-49.1

BULLETIN #49
DSA FILE # 7-C1
DSA APPL.# 01-106226
B.3
CFSD
36x24
TA DUCT
ABOVE
CEILING.
TA
16x10
16x14
20x14
VCD
12"ø
12"ø
12"ø
LINEAR SUPPLY DIFFUSER, 2 SLOT FL-10-JT,
WITH INSULATED PLENUM & 8"ø INLET,
4-FOOT LENGTH, 285 CFM TOTAL. BORDER
TYPE 66. WITH BLANK FILLER PLATES
BETWEEN DIFFUSERS. (TYP 3)
VAV
3.2
AUTO-TUTORIAL CENTER
102
SEE RFI 521
16"ø
LINEAR SUPPLY DIFFUSER, 2 SLOT FL-10-JT,
WITH INSULATED PLENUM & 8"ø INLET,
4-FOOT LENGTH, 360 CFM TOTAL. BORDER
TYPE 66. WITH BLANK FILLER PLATES
BETWEEN DIFFUSERS. (TYP 2)
VAV
3.3
12"ø
12"ø
14x14
16x16
18x16
8"ø
SCIENCE BUILDING
LOS MEDANOS COLLEGE
Pittsburg CA
Contra Costa Community College
School District
ARCHITECT
tBP/Architecture
1000 Burnett Ave, Suite 140
Concord, CA 94520
p: 925.246.6419 f: 925.246.6495
tBP
architecture
planning
interiors
management
BULLETIN #49
DATE: 11/06/06
DSA NO. 01-106226
THIS REVISES IN PART
SHEET: M1.4
SHEET: SKM-49.2

7
K

S. J. AMOROSO

Request For Information/Clarification

DSA FILE NO. 7-C1
DSA APPL. No. 01-106226

To: tBP/Architecture
1000 Burnett Ave, Suite 140
Concord, CA 94520

Project: LOS MEDANOS COLLEGE
SCIENCE BUILDING
Contra Costa Community College
District

Attn: Celia Chiang, Tom Beckett
Fax: 925-246-6495

tBP p/n: 20247.00

Subj.: Connections to linear diffusers in room 102
due to changes in Bulletin 49
Reference (dwg, spec.): Bulletin 49

RFI No: 521

Subcontractor RFI:

Reply Requested By: 4/27/07

Date: 4/20/07

INFORMATION REQUESTED:

Reference sketch SKM-49.2 of Bulletin 49. As discussed with the mechanical engineer, please confirm that the following will be acceptable in order to make the required connections:

South linear diffuser: Due to dimensional issues, the conical transition will be eliminated and the damper will be installed directly to the duct and from there connections made to the linear diffuser.

North linear diffuser: Due to dimensional issues, the connection will be made to the bottom of the ducting and a short radius elbow installed prior to the damper and from there connections made to the linear diffuser.

SUGGESTED SOLUTION:
Cost Impact: ☐
Schedule Impact: ☐ days
By: Justin Warren

RESPONSE:

DATE:

No Exception Taken

1

Jim Weaver / tBP Architecture
David Ainsworth / Ainsworth Associates

5/2/07

Los Medanos College
4CD Proj. #: L-565-B-23-SC
Science Building

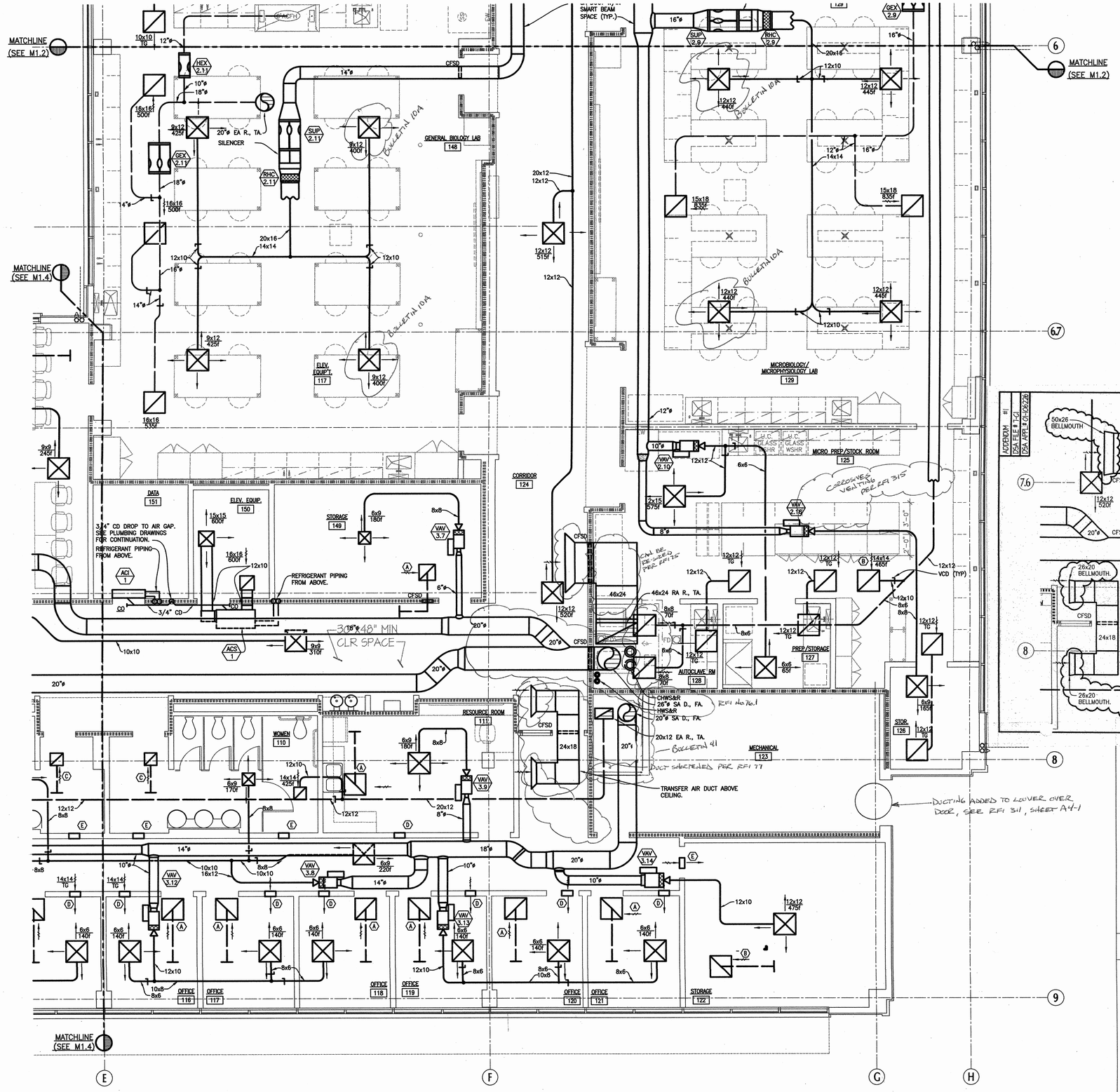


## AIR CONDITIONING - 1ST FLOOR - PARTIAL PLAN

1 / M1.3

SCALE: 1/4"=1'-0"

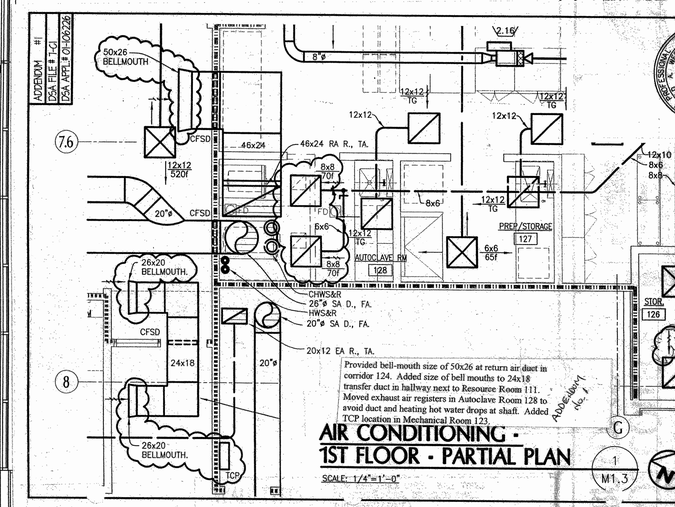


## AIR CONDITIONING - 1ST FLOOR - PARTIAL PLAN

1 / M1.3

SCALE: 1/4"=1'-0"

1-HR FIRE RATED ASSEMBLY

1-HR FIRE RATED ASSEMBLY (OCCUPANCY SEPARATION)

2-HR FIRE RATED ASSEMBLY (AT CHEMICAL WASTE STORAGE ONLY)

STUD PARTITION
REFER TO SHEET 4.02 FOR PARTITION TYPES

## KEY PLAN

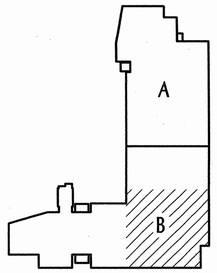



tBP
architecture
planning
interiors
management

tBP/Architecture
1000 Burnett Avenue, Suite 140
Concord, CA 94520
p: 925.246.6419 f: 925.246.6495

architect

AINSWORTH ASSOCIATES
MECHANICAL ENGINEERS
SACRAMENTO, CA
LPS-2005-003

consultant

name
address
city, state, zip
ph:
fax

agency


# SCIENCE LOS MEDANOS

Contra Costa Community College District

owner

tBP project number : 2024100

file name:

drawn by: checked by:

date: NOVEMBER 15, 2004

| Rev. | date: | description: |
|---|---|---|
| | | |

drawing title:
AIR CONDITIONING - 1ST FLOOR - PARTIAL PLAN

LMC SCIENCE 313-023-112.01-0-00.00

drawing no.: M1.3

drawing of ?

**S. J. AMOROSO**
**Request For Information/Clarification**

**DSA FILE NO. 7-C1**
**DSA APPL. No. 01-106226**

To: tBP/Architecture
1000 Burnett Ave, Suite 140
Concord, CA 94520

Attn: Celia Chiang, Tom Beckett
Fax: 925-246-6485

Project: LOS MEDANOS COLLEGE SCIENCE BUILDING
Contra Costa Community College District

tBP phr: 20247.00

Subj.: Elevation of AC5-2 in room 237

Reference (dwg, spec.) : M2.1, A2-3

RFI No: **244**
Subcontractor RFI: Monterey II

Reply Requested By: **6/16/06**

**INFORMATION REQUESTED:**

Date: 6/6/06

On drawings M2.1,fan coil AC5-2 is shown hung in storage room 237 serving the elevator machine room 238 via side wall registers and grille. Drawings A2-3 indicated the ceiling height of room 237 to be the typical 10'-0" height while room 238 is 9'-0½". Is AC5-2 mounted below the 10'-0" ceiling in room 237? Please indicate the elevation of this unit.

**SUGGESTED SOLUTION:**

Cost Impact: ☐ Schedule Impact: ☐ days By: Mark Delgado

**RESPONSE:** AC5-2 is located above the ceiling. Recommend changing sidewall diffusers to ceiling diffuser. SK diffuser to be 1ssh and return air to be sized at 1ssh. Note that exact location of the diffusers are not critical and can be field located in the general area. Modifications to the shop drawings not required.

DATE: 6/14/06

**Attachments:** Contractor to indicate change in as-built drawings.

By: Dave Weston/AMS

**TRANSMITTAL RECORD:**

| FROM | TO | DATE |
|---|---|---|
| S.J. AMOROSO | tBP / ARCHITECTURE | 6/6/06 |
| tBP / ARCHITECTURE | ENGINEER/CONSULTANT | 6/7/06 |
| ENGINEER/CONSULTANT | tBP / ARCHITECTURE | 6/14/06 |
| tBP / ARCHITECTURE | S.J. AMOROSO | 6/14/06 |
| S.J. AMOROSO | ORIGINATOR | |

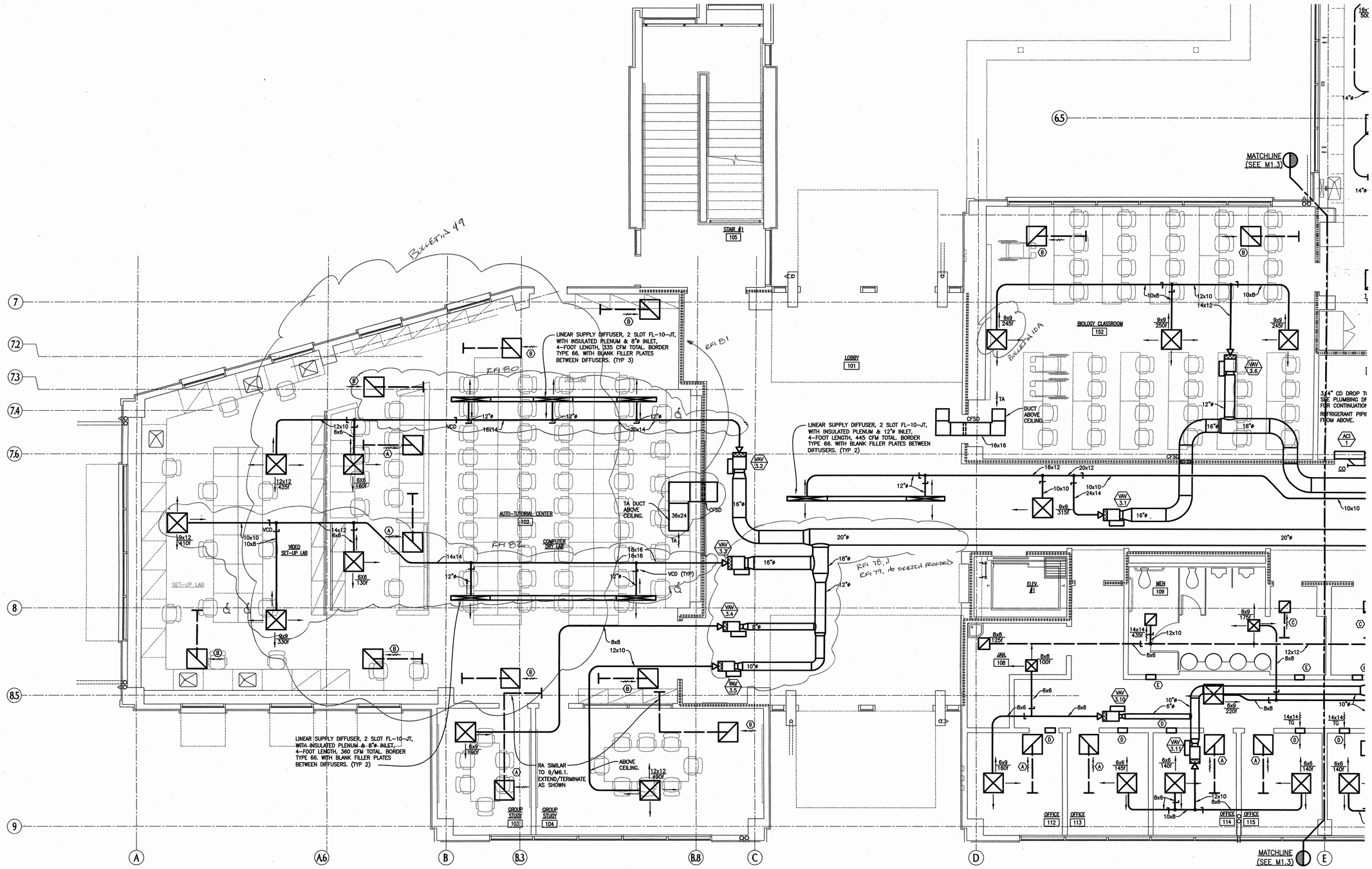


## AIR CONDITIONING - 1ST FLOOR - PARTIAL PLAN

SCALE: 1/4"=1'-0"

1 / M1.4

### WALL TYPES

(FOR REFERENCE ONLY. WALL TYPES ON ARCHITECTURAL DRAWINGS SHALL TAKE PRECEDENCE.)

1-HR FIRE RATED ASSEMBLY

1-HR FIRE RATED ASSEMBLY (OCCUPANCY SEPARATION)

2-HR FIRE RATED ASSEMBLY (AT CHEMICAL WASTE STORAGE ONLY)

STUD PARTITION
REFER TO SHEET 4.02 FOR PARTITION TYPES

### KEY PLAN

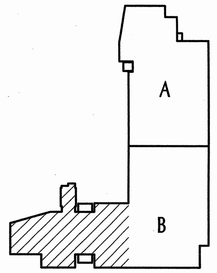



tBP/architecture
1000 Burnett Avenue, Suite 140
Concord, CA 94520
p: 925.246.6419 f: 925.246.6495

AINSWORTH ASSOCIATES
MECHANICAL ENGINEERS
SACRAMENTO, CA
JOB: 2003-005


name
address
city, state, zip
ph: fc

# SCIENCE BUILDING
# LOS MEDANOS COLLEGE

Contra Costa Community College District

owner

tBP project number : 2024.00
file name:
drawn by: checked by:
date: NOVEMBER 15, 2004

| Rev. | date: | description: |
|---|---|---|

drawing title:
**AIR CONDITIONING - 1ST FLOOR - PARTIAL PLAN**

LMC SCIENCE 313-023-112.01-0-00.00
drawing no.:
**M1.4**
drawing of ?

\\2003-005\DWGS\M-1-4.dwg Tue,Nov13,2004-03:45pm

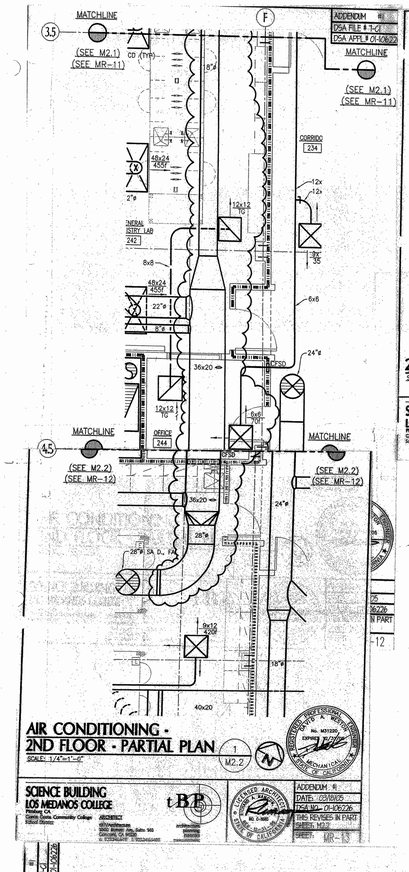


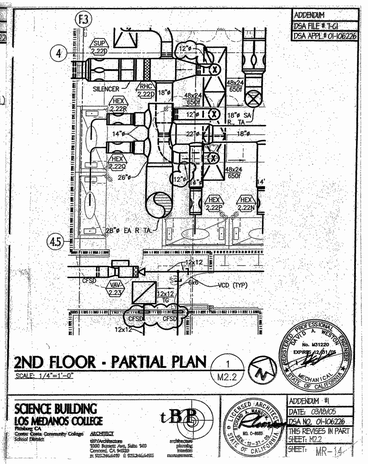


**S. J. AMOROSO**
**Request For Information/Clarification**

**DSA FILE NO. 7-C1**
**DSA APPL. No. 01-106226**

To: tBP/Architecture, 1000 Burnett Ave, Suite 140, Concord, CA 94520
Attn: Celia Chiang, Tom Beckett
Fax: 925-245-6495

Project: LOS MEDANOS COLLEGE SCIENCE BUILDING, Contra Costa Community College District
tBP job: 20247.00

Subj.: Conflict between fume hood exhaust and soffit wall at H-line, room 235. Reference (dwg, spec.): A1-0, 4/A6-1, M2-2

RFI No: **495**
Subcontractor RFI

Reply Requested By: 3/16/07

INFORMATION REQUESTED: Date: 3/2/07

In laying out fume hood locations so that we can locate above-ceiling fume hood exhaust ductwork, we have discovered that the vertical "soffit wall" found along the entire building perimeter is in conflict with the exhaust ductwork for the fume hoods along I-line in room 235. More specifically, the conflict is that the "wall" is directly above the exhaust hole at the top of the fume hoods so that the exhaust ductwork would be in the same plane as the already-built wall. Attached are two sketches showing the shortest runs that are affected by this conflict. Trying to cut the hole in the wall to accommodate the ductwork would result in the remaining wall segments being "flimsy" which would be a concern. Also, that bottom elevation of this wall is 10" lower than the adjacent T-bar ceiling. Thus, the 3-sided "cover" that goes on top of each fume hood (if it is installed) would have a visible gap between it and the T-bar ceiling above; Another possibility may be to remove this wall entirely and run the T-bar ceiling to the "low" wall that is adjacent to the windows. This low wall may need to be extended up to make this feasible.

Please review and advise.

SUGGESTED SOLUTION:
Cost Impact: ☐ Schedule Impact: ☐ days By: Justin Warren

RESPONSE: DATE:

Upon further review and discussions, we take no exception to the proposed exhaust duct configuration per attached sketch dated 4/9/07 . This configuration will route the duct outside of the drop soffit conflict.

In review of the hood submittal, there appear no specific requirements of duct run off the top of the hood. Exhaust performance will not be affected. Should excessive noise be encountered it will be addressed with external measures at that time.

Please provide cost proposal (per attached sketch modifications) for review at earliest convenience.

Jim Weaver, Tom Beckett / ISP Architecture 4/16/07
Dave Weston / Ainsworth Associates
Richard Cate / RFD

RFI # 000
Page 1

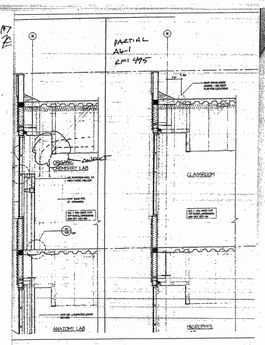


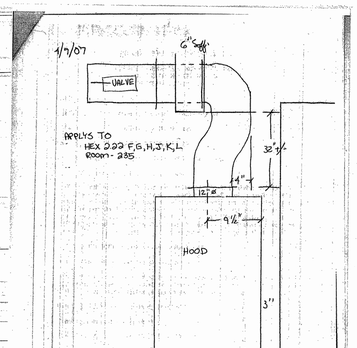


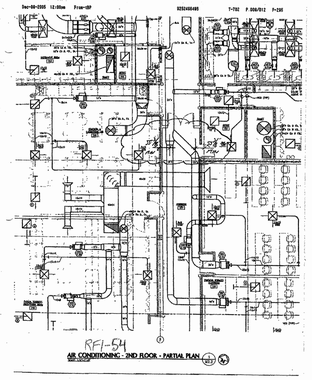


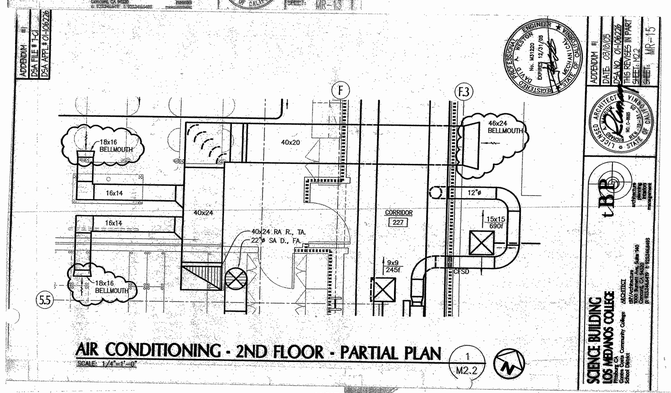


**S. J. AMOROSO**
**Request For Information/Clarification**

**DSA FILE NO. 7-C1**
**DSA APPL. No. 01-106226**

To: tBP/Architecture, 1000 Burnett Ave, Suite 140, Concord, CA 94520
Attn: Celia Chiang, Tom Beckett
Fax: 925-245-6495

Project: LOS MEDANOS COLLEGE SCIENCE BUILDING, Contra Costa Community College District
tBP job: 20247.00

Subj.: Ductwork Layout Conflicts on Page M2.2 and M2.4. Reference (dwg, spec): M2.2 and M2.4

RFI No: **110**
Subcontractor RFI# Monterey 3

Reply Requested By: 2/6/06

INFORMATION REQUESTED: Date: 1/30/06
(Please note the attached RFI No. 3 from Monterey Mechanical regarding several conflicts on pages M2.2 and M2.4. Sketches are clouded and numbered per the RFI. Please advise and provide a sketch if necessary.

SUGGESTED SOLUTION:
Cost Impact: ☐ Schedule Impact: ☐ days By: Mark Delgado

RESPONSE: DATE:
Response number: 1
Author: Mark Delgado
Subject: Note
Date: 2/6/2006 1:40:36 PM
Response text: Mark Delgado
1. Top 10" round from top of duct and run above 26" round.
2. Projector to be supported by bracing - see arch. dwgs for details.
3. Provide transition fittings.
4. Recommended shifting diffuser north by 40" to avoid conflict. Also relocate adjacent SA diffuser so that layout is symmetric.
5. Beam penetration to be provided similar to first flyer. ✓

Note - these items were discussed during the 02/01/06 site meeting. Contractor to show changes in shop drawings.

TRANSMITTAL RECORD:

| FROM | TO | DATE |
|---|---|---|
| S.J. AMOROSO | ISP / ARCHITECTURE | 1/30/06 |
| ISP / ARCHITECTURE | ENGINEER/CONSULTANT | |
| ENGINEER/CONSULTANT | ISP / ARCHITECTURE | |
| ISP / ARCHITECTURE | S.J. AMOROSO | |
| S.J. AMOROSO | ORIGINATOR | |

RFI # 000
Page 1

**MONTEREY MECHANICAL**
PROCESS PIPING • HVAC • SHEET METAL • PLUMBING
3661 Wilbur Ave, Antioch, CA 94509 • Phone (925) 777-6640 • Fax (925) 757-0576

**REQUEST FOR INFORMATION**

PROJECT: Los Medanos College Science Building
MMC RFI #: 003
SUBJECT: 2nd Floor HVAC Duct Conflicts
DATE REQUESTED: 1/26/06

**QUESTION**

| FROM: Steve Harris-MMC | TO: Mark G. Delgado-SJA | DATE: 1/11/06 |
|---|---|---|

Reference Drawing: M2.2, M2.4
Reference Specification: Div 15

While in the process of detailing the ductwork layout with structural, architectural reflected ceiling plan, electrical & plumbing, we have discovered several conflicts on contract drawings: M2.2,M2.4

1. 18" SA duct – interferes with 26" EA duct. Not enough space.
2. Projector support interferes with duct.
3. Drawing shows a 22" round duct tapping into the side of a 36"w x 20"h duct.
4. 12" SA duct interferes w/22" SA duct. Not enough space.
5. 16x14 SA duct needs to rise, interferes w/beam & ceiling height. Not enough space.

See the attached (3) sketches. Conflicts are clouded and numbered per the list above.

Please Advise

**RESPONSE**

| FROM: | TO: | DATE: |
|---|---|---|

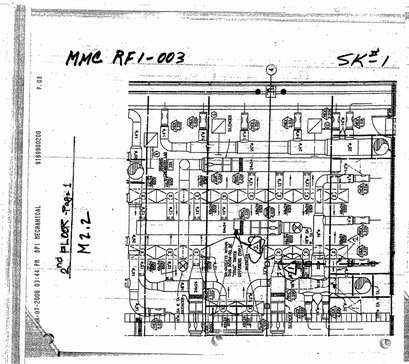


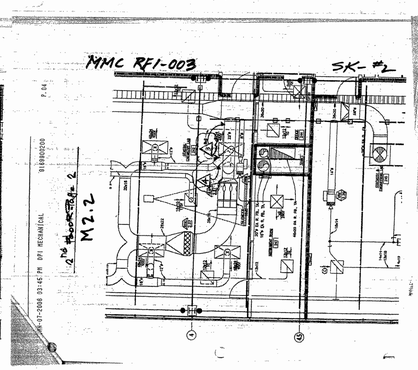


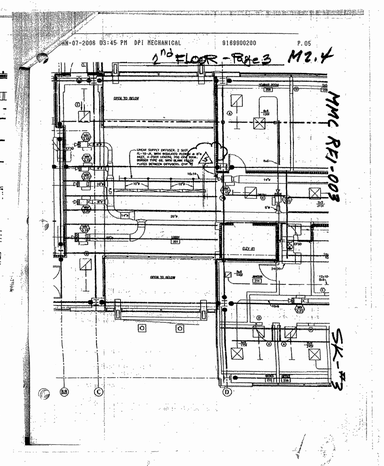


Los Medanos College
4CD Proj. #: L-565-B-23-SC
**Science Building**

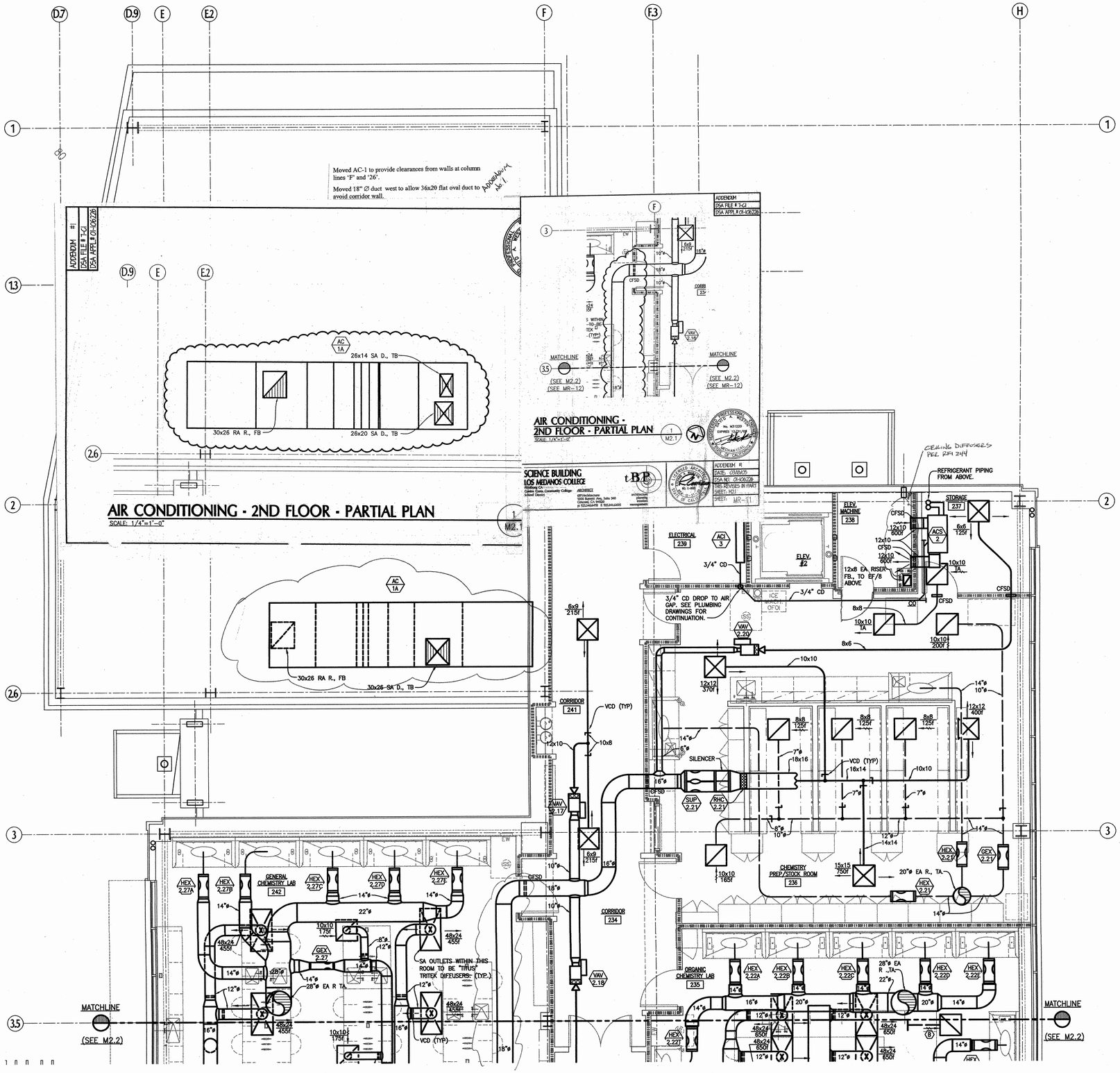


## AIR CONDITIONING - 2ND FLOOR - PARTIAL PLAN

SCALE: 1/4"=1'-0"

1 M2.1

## NOTES:

1. ROUTE MEDIUM PRESSURE DUCTWORK THROUGH SMART BEAMS UNLESS NOTED OTHERWISE.
2. MEDIUM PRESSURE DUCTWORK ROUTED BELOW BEAMS.
3. ROUTE DUCTWORK THROUGH SMART BEAMS.

## WALL TYPES -

(FOR REFERENCE ONLY. WALL TYPES ON ARCHITECTURAL DRAWINGS SHALL TAKE PRECEDENCE.)

1-HR FIRE RATED ASSEMBLY

1-HR FIRE RATED ASSEMBLY (OCCUPANCY SEPARATION)

2-HR FIRE RATED ASSEMBLY (AT CHEMICAL WASTE STORAGE ONLY)

STUD PARTITION
REFER TO SHEET 4.02 FOR PARTITION TYPES

## KEY PLAN

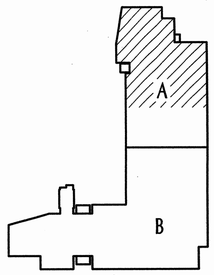



tBP
architecture
planning
interiors
management

tBP/Architecture
1000 Burnett Avenue, Suite 140
Concord, CA 94520
p: 925.246.6419 f: 925.246.6495
architect

AINSWORTH ASSOCIATES
MECHANICAL ENGINEERS
SACRAMENTO, CA
consultant


CERTIFICATION STAMP
DSA, OF THE STATE ARCHITECT
APPL. # 01-106226
DATE 11/15/04

name
address
city, state, zip
ph: fx
agency

# SCIENCE BUILDING LOS MEDANOS COLLEGE

Contra Costa Community College District

owner

tBP project number : 20247.00
file name:
drawn by: checked by:
date: NOVEMBER 15, 2004

| Rev: | date: | description: |
|---|---|---|

drawing title:
**AIR CONDITIONING - 2ND FLOOR - PARTIAL PLAN**

LMC SCIENCE 313-023-112.01-0-00.00
drawing no:
**M2.1**
drawing of ?

\2023-0091\DWG\M-2.1-4.dwg Tues Nov\1,2004-09:45pm

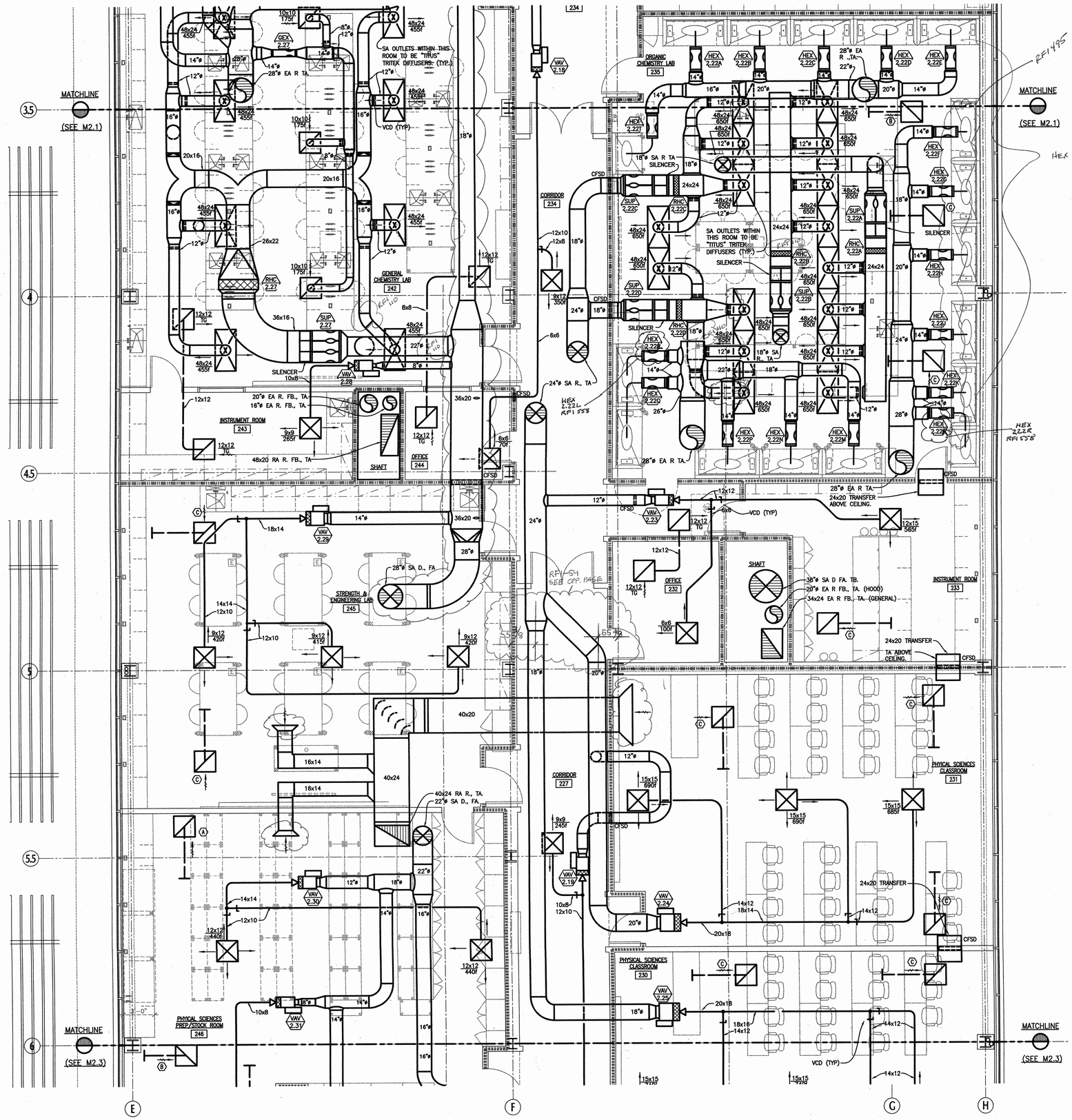


## AIR CONDITIONING - 2ND FLOOR - PARTIAL PLAN

SCALE: 1/4"=1'-0"

1 / M2.2

**S. J. AMOROSO**
**Request For Information/Clarification**

**DSA FILE NO. 7-C1**
**DSA APPL. No. 01-106226**

To: tBP/Architecture, 1000 Burnett Ave, Suite 140, Concord, CA 94520
Attn: Celia Ohlang, Tom Beckett
Fax: 925-246-6495
Subj.: Hex valve duct size
Reference (dwg, spec.): M2.1, M2.2
Reply Requested By: 9/14/06

Project: LOS MEDANOS COLLEGE SCIENCE BUILDING, Contra Costa Community College District
tBP p/n: 20247.00
RFI No: 343
Subcontractor RFI: Monterey 14

INFORMATION REQUESTED: Date: 9/7/06

Hex valves 2.22 A thru H, J thru N, P thru T and 2.27 A thru E, located on the second floor do not specify size of duct from valve to hood. Please indicate duct size.

SUGGESTED SOLUTION:
Cost Impact: ☐ Schedule Impact: ☐ days By: Justin Warren

RESPONSE: DATE:
Duct size should be 14" diameter with reduction to hood connection size (if necessary) at hood.

Dave Weston/AMS - 9/8/06

RFI # 000
Page 1

Moved 36x20 flat oval duct above General Chemistry Lab 242 to avoid wall at entry to Lab.

Moved 36x20 flat oval duct above General Chemistry Lab 242 to avoid wall at entry to Lab.

Provided combination fire smoke dampers at supply and transfer ducts serving Office 232. Indicated sizes of 12" ∅ supply air ducts to 48x24 supply air diffusers in Organic Chemistry Lab 235.

Provided bell-mouth size of 18x16 at return air duct above Strength & Engineering Lab 245. Provided bell-mouth size of 18x16 at return air duct above Physical Sciences Prep/Stockroom 246. Provided bell-mouth size of 46x24 at return air duct above Physical Sciences Classroom 231.

ADDENDUM No. 1

## WALL TYPES -

(FOR REFERENCE ONLY. WALL TYPES ON ARCHITECTURAL DRAWINGS SHALL TAKE PRECEDENCE.)

1-HR FIRE RATED ASSEMBLY

1-HR FIRE RATED ASSEMBLY (OCCUPANCY SEPARATION)

2-HR FIRE RATED ASSEMBLY (AT CHEMICAL WASTE STORAGE ONLY)

STUD PARTITION
REFER TO SHEET 4.02 FOR PARTITION TYPES

## KEY PLAN

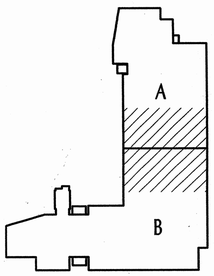



tBP
architecture
planning
interiors
management

LICENSED ARCHITECT
STATE OF CALIFORNIA

tBP/Architecture
1000 Burnett Avenue, Suite 140
Concord, CA 94520
p: 925.246.6419 f: 925.246.6495

architect

AINSWORTH ASSOCIATES
MECHANICAL ENGINEERS
SACRAMENTO, CA
LCS-2005-003

consultant


ENVIRONMENTAL HEALTH
DIV. OF THE STATE ARCHITECT
OFFICE OF REGULATION SERVICES
APPL. - 0001062006
ACCEPTED BY
DATE 1-10-06

name
address
city, state, zip
pt: fx

agency

# SCIENCE BUILDING LOS MEDANOS COLLEGE

Contra Costa Community College District

owner

tBP project number : 20247.00
file name:
drawn by: checked by:
date: NOVEMBER 15, 2004

| Rev. | date: | description: |
|---|---|---|
| | | |

drawing title:
**AIR CONDITIONING - 2ND FLOOR - PARTIAL PLAN**

LMC SCIENCE 313-023-T12.01-0-00.00
drawing no.: **M2.2**
drawing of ?

I:\20247-LOS MEDANOS\M-2-1-4.dwg Time:Nov\1,2004-03:46pm

**S. J. AMOROSO**
**Request For Information/Clarification**

**DSA FILE NO. 7-C1**
**DSA APPL. No. 01-106226**

To: tBP/Architecture
1000 Burnett Ave, Suite 140
Concord, CA 94520

Attn: Celia Chiang, Tom Beckett
Fax: 925-245-6495

Project: LOS MEDANOS COLLEGE
SCIENCE BUILDING
Contra Costa Community College District

tBP p/n: 20247.00

Subj.: Brace in Room 203 along 8.5 Line

RFI No: **433**

Reference (dwg, spec.): Attached Sketch

Subcontractor RFI:

Reply Requested By: 12/11/06

**INFORMATION REQUESTED:** Date: 12/4/06

Please note the attached Sketch regarding the brace for Room 203 along 8.5 Line. SJA proposes to relocate the brace up to 24" up vertical stub in lieu of 12" per plan due to Ductwork and Fire sprinkler piping. Please advise.

**SUGGESTED SOLUTION:**
Cost Impact: ☐ Schedule Impact: ☐ days By: Mark Delgado

**RESPONSE:** DATE:

Structural approval will not be granted by DSA for this approach. Per discussion with M.E. at jobwalk 12/5/06, duct is to be transitioned up to allow bracing to be installed within lower 12" of soffit drop. No cost to owner.

Tom Beckett / tBP Architecture

12/6/06

RFI # 000
Page 1

Los Medanos College
4CD Proj. #: L-S65-B-23-SC
**Science Building**

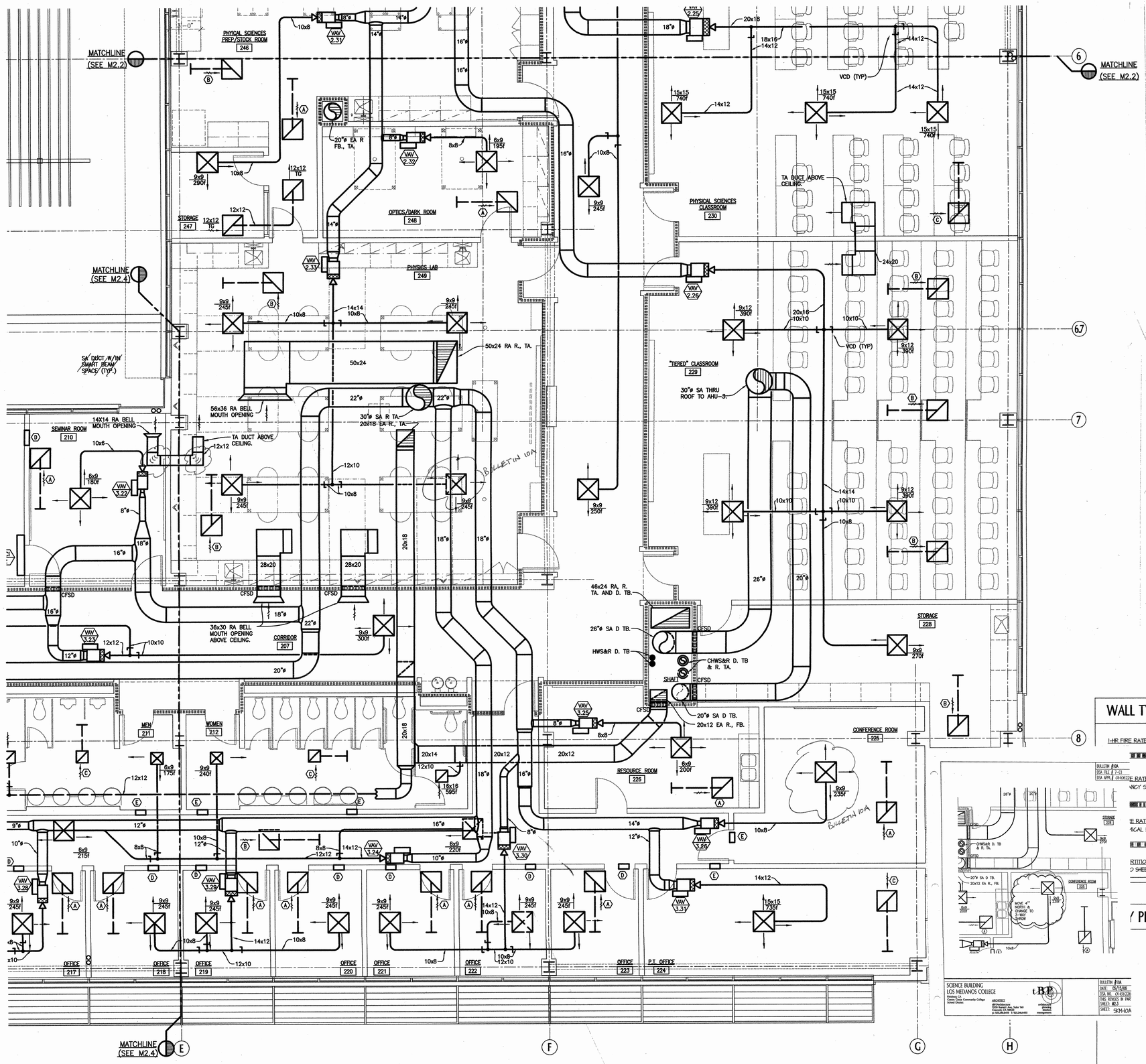


## AIR CONDITIONING - 2ND FLOOR - PARTIAL PLAN

1 / M2.3

SCALE: 1/4"=1'-0"

WALL TYPES - (FOR REFERENCE ONLY. WALL TYPES ON ARCHITECTURAL DRAWINGS SHALL TAKE PRECEDENCE.)

1-HR FIRE RATED ASSEMBLY

E RATED ASSEMBLY

NCY SEPARATION)

E RATED ASSEMBLY

ICAL WASTE STORAGE ONLY)

RTITION

D SHEET 4.02 FOR PARTITION TYPES

/ PLAN

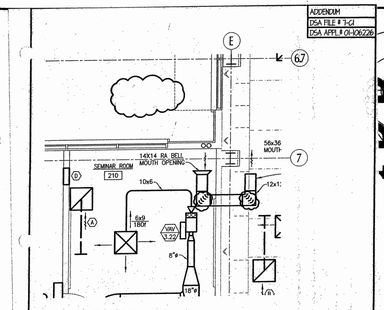


Removed unnecessary note "SA DUCT W/ IN SMART BEAM (TYP.)" above Seminar Room 210 and to the left of Physics Lab 249. ADDENDUM #1

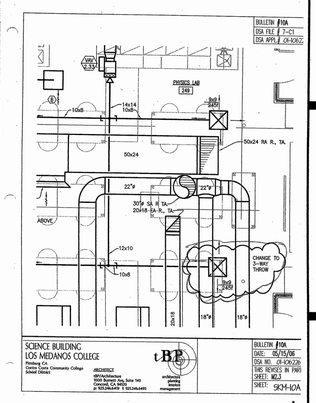





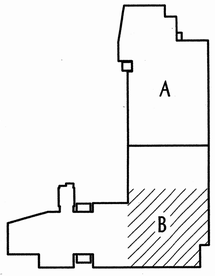


ADDENDUM
DSA FILE # 7-C1
DSA APPL # 09-106226

tBP
architecture
planning
interiors
management

tBP/Architecture
1000 Burnett Avenue, Suite 140
Concord, CA 94520
p: 925.246.6419 f: 925.246.6495

architect

AINSWORTH ASSOCIATES
MECHANICAL ENGINEERS
SACRAMENTO, CA
L05-2009-009

consultant

IDENTIFICATION STAMP
DIV. OF THE STATE ARCHITECT
OFFICE OF REGULATION SERVICES
APPL - 09-106226
DATE 11-15-05

name
address
city, state, zip
ph: fx:

agency

# SCIENCE BUILDING LOS MEDANOS COLLEGE

Contra Costa Community College District

owner

tBP project number : 2024100

file name:

drawn by: checked by:

date: NOVEMBER 15, 2004

| Rev: | date: | description: |
|---|---|---|
| | | |

drawing title:

AIR CONDITIONING - 2ND FLOOR - PARTIAL PLAN

LMC SCIENCE 313-023-T12.01-0-00.00

drawing no.:

M2.3

drawing of ?

I:\2009-009\DWG\M-2.1-4.dwg Tiffany, Nov 11, 2004 - 03:46pm

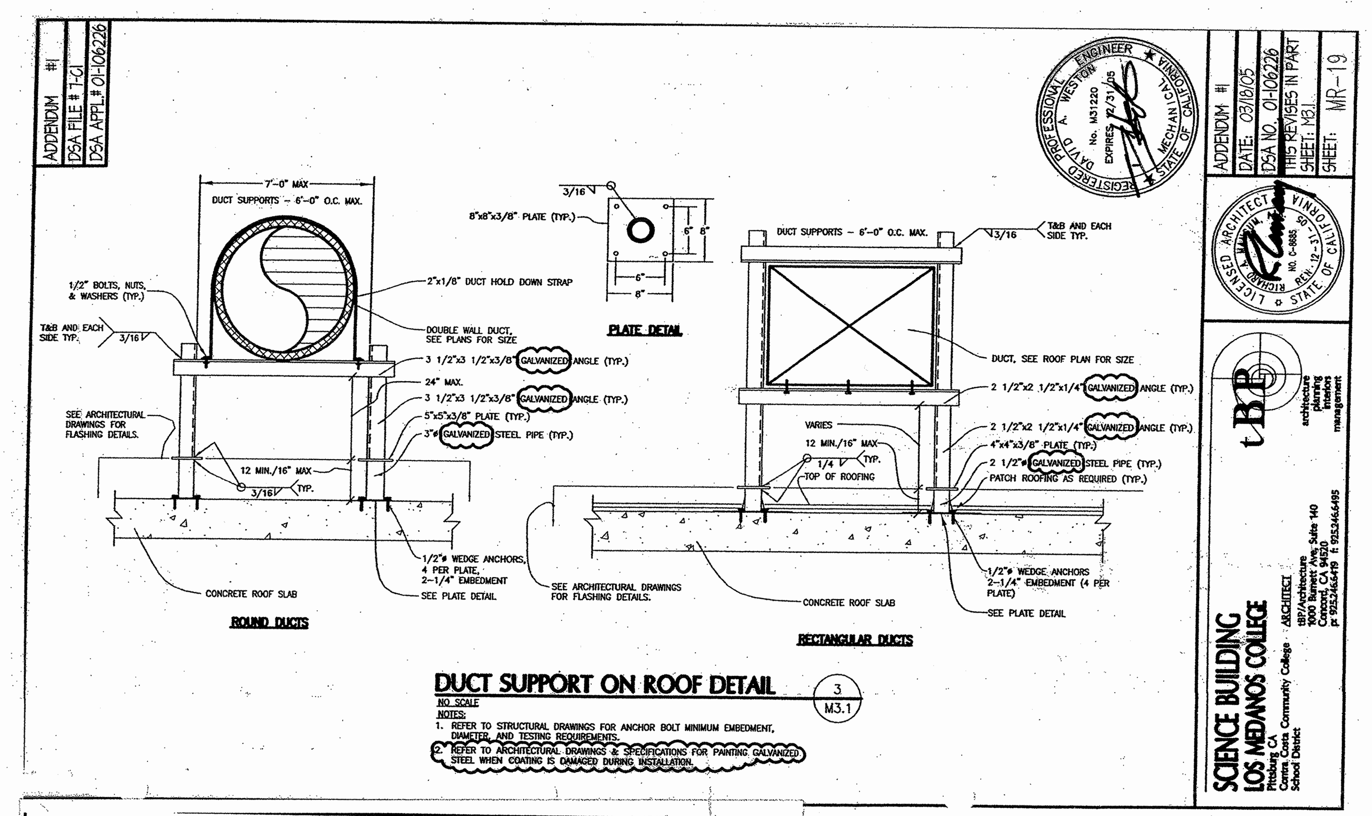


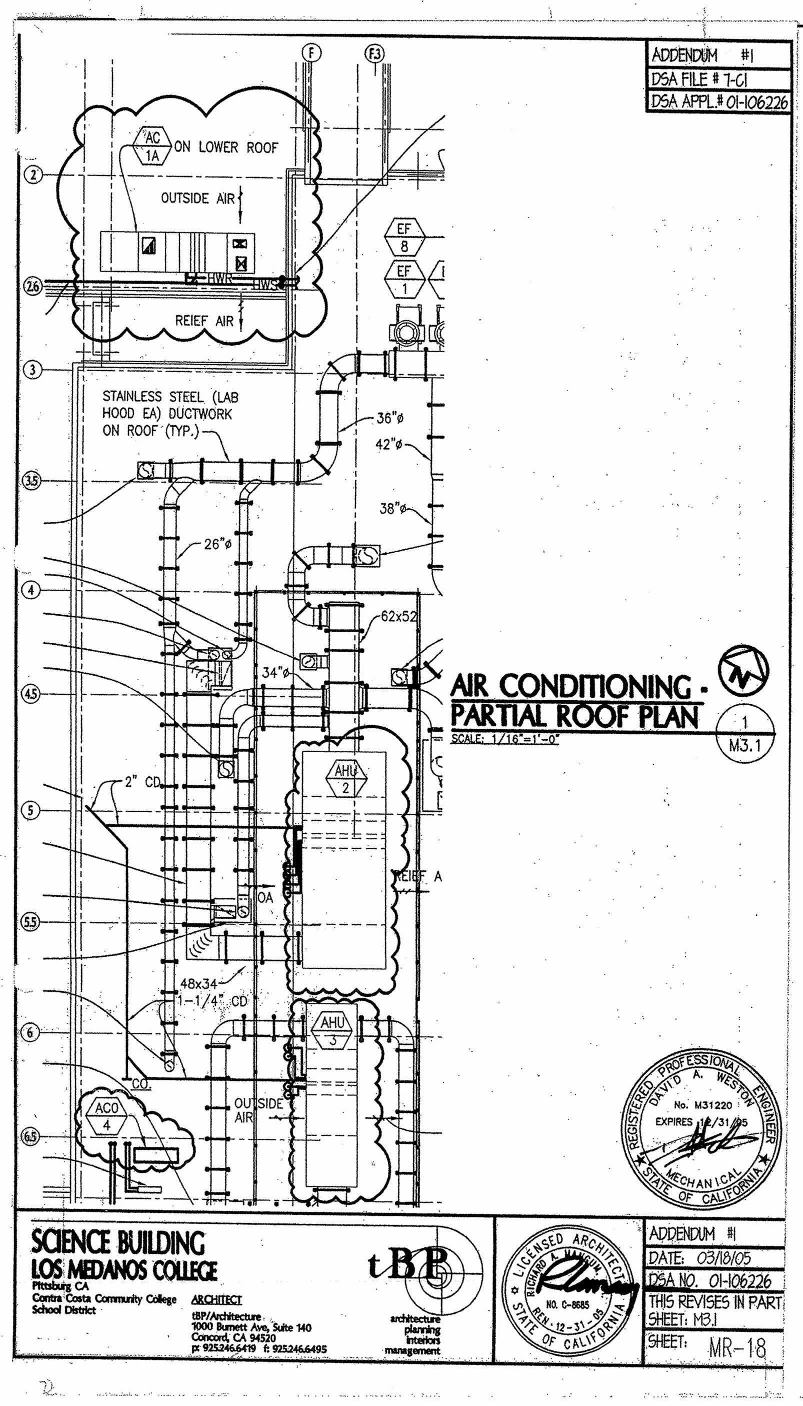


**S. J. AMOROSO**
**Request For Information/Clarification**

**DSA FILE NO. 7-C1**
**DSA APPL. No. 01-106226**

**To:** tBP/Architecture, 1000 Burnett Ave, Suite 140, Concord, CA 94520
**Attn:** Celia Chiang, Tom Beckett
**Fax:** 925-246-6495
**Project:** LOS MEDANOS COLLEGE SCIENCE BUILDING, Contra Costa Community College District
tBP p/n: 20247.00
**Subj.:** Orientation of ACO 1, 2, 3 and 4
**RFI No:** 362
**Reference (dwg, spec.):** M3-1
Subcontractor RFI
**Reply Requested By:** 9/29/06

**INFORMATION REQUESTED:** **Date:** 9/28/06
HOT HOT HOT
Per roof plan on sheet M3.1 (as well as Addendum no. 1 which added AC) 4) the orientation of ACO's 1, 2, 3 and 4 are shown. We would like to rotate each of these units 90 degrees from that shown on the plans. Rotating the units in the manner will present to shortest possible dimension of the unit supports to the flow of water running along the roof. This allows for a more prudent roofing scenario. Please advise if this is acceptable.

**SUGGESTED SOLUTION:**
**Cost Impact:** ☐ **Schedule Impact:** ☐ days **By:** Mark Delgado

**RESPONSE:** **DATE:**
From a mechanical viewpoint, the orientation of the ACOs is not critical and can be shifted and/or rotated. Contractor to maintain clearance between units as recommended by the manufacturer and keep units a minimum of 4'-0" from parapet wall.

Dave Weston/AAME - 9/28/06

RFI # 000
Page 1

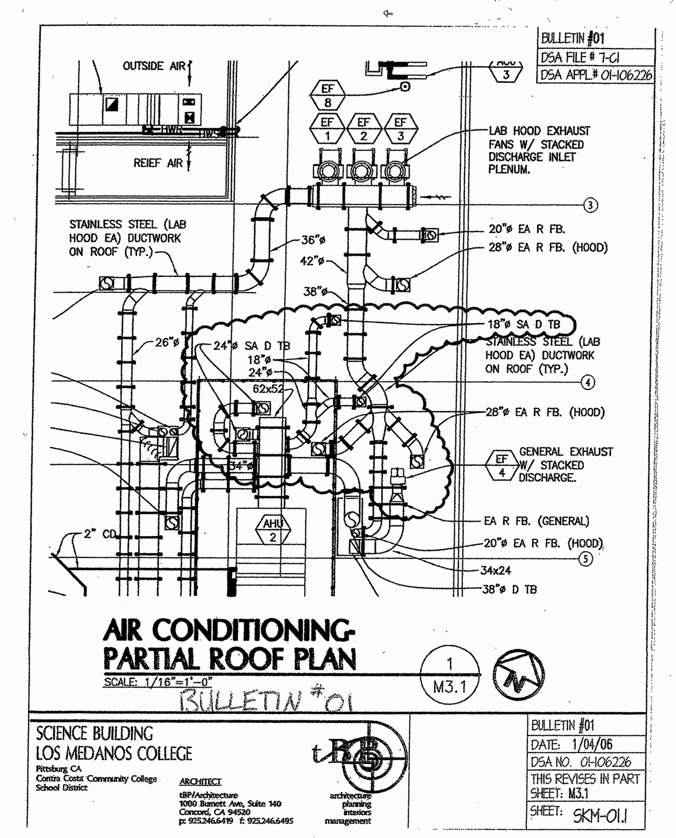


**S. J. AMOROSO**
**Request For Information/Clarification**

**DSA FILE NO. 7-C1**
**DSA APPL. No. 01-106226**

**To:** tBP/Architecture, 1000 Burnett Ave, Suite 140, Concord, CA 94520
**Attn:** Celia Chiang, Tom Beckett
**Fax:** 925-246-6495
**Project:** LOS MEDANOS COLLEGE SCIENCE BUILDING, Contra Costa Community College District
tBP p/n: 20247.00
**Subj.:** VFD Locations
**RFI No:** 266 (REVISED 07/13/06)
**Reference (dwg, spec.):** EF-1, EF-2, EF-3, EF-7
Subcontractor RFI: EWS 23
**Reply Requested By:** 7/5/06

**INFORMATION REQUESTED:** **Date:** 6/27/06
Please note the attached Edward Scott Electric RFI No. 23 regarding the VFD Locations for EF-1, EF-2, EF-3 and EF-7. Please advise.

**SUGGESTED SOLUTION:**
**Cost Impact:** ☐ **Schedule Impact:** ☐ days **By:** Justin Warren

**RESPONSE:** **DATE:**
Response by TWF: Per the mechanical consultant's input, the 'VFD' for 'EF-1' and 'EF-2' will be located on the roof at the fan units. (See the following response by AAME for locations.)
The electrical connection will be a single point connection to the 'VFD'. Combination magnetic starter/disconnect switch (shown on contract electrical drawings) 'EF-1', and 'EF-2' should be deleted.
Per mechanical consultant, 'EF-3' does not have a 'VFD', therefore 'EF-3' shall be connected to a combination motor starter/disconnect switch as shown on contract electrical drawings.
Per mechanical consultant, 'EF-7' has a 'VFD' and shall be located on the ~~east~~ WEST wall, SOUTH OF ~~adjacent~~ to the ~~motor control center~~ CHWP/1. Starter for 'EF-7' in 'MCC-CH' shall be deleted.
Larry Lai/TWF
7/12/06

Response by AAME:
Locate VFDs as follows:
EF-1 and EF-2's VFD is to be mounted on the roof adjacent to the fan. Note that per discussions with Fan Representative, a unistrut stand and NEMA 3 enclosure are to be provided.
EF-3 - per Contract Documents - no VFD. Needs starter. Note that this fan is a back-up fan in case either EF-1 or EF-3 fails.
EF-7 - Mount on wall in chiller room - Recommended location is on west wall. Locate south of CHWP/1. Note that exact location is not important. Field coordinate exact location between electrical and mechanical sub-contractor.
Dave Weston/AAME
7/12/06

RFI # 000
Page 1

**EDWARD W. SCOTT ELECTRIC CO., INC.**
435 HARRIET STREET
San Francisco, CA 94103-4914
Phone: (415) 626-0701 Fax: (415) 626-2837

**REQUEST FOR INFORMATION**

PROJECT: LMC SCIENCE BLDG. R.F.I.# 23 R.F.I. Date 6/27/06
JOB: 2451 ACTUAL REPLY DATE ____

TO: MARK DELGADO
OF: AMOROSO CONST.
REF: DWG: MO.1, "E" DWGS.
LOCATION: VARIOUS

POTENTIAL COST IMPACT
✓ COST ✓ SCHEDULE
___ OTHER ✓ LABOR
___ NO IMPACT ✓ MATERIAL

INFORMATION REQUESTED: WE ARE UNABLE TO FIND THE VFD LOCATIONS FOR EF-1, EF-2, EF-3 OR EF-7 (LOCATED IN CHILLER PUMP BLDG.). PLEASE ADVISE.

REPLY REQUIRED BY: ____ SIGNED: [signature]
NOTE: IF NO REPLY IS RECEIVED BY US BY THE ABOVE NOTED DATE, A TIME EXTENSION WILL BE REQUIRED WITH POSSIBLE COST IMPACTS.

RESPONSE:

DATED: ____ SIGNED: ____

**S. J. AMOROSO**
**Request For Information/Clarification**

**DSA FILE NO. 7-C1**
**DSA APPL. No. 01-106226**

**To:** tBP/Architecture, 1000 Burnett Ave, Suite 140, Concord, CA 94520
**Attn:** Celia Chiang, Tom Beckett
**Fax:** 925-246-6495
**Project:** LOS MEDANOS COLLEGE SCIENCE BUILDING, Contra Costa Community College District
tBP p/n: 20247.00
**Subj.:** Relocating AHU-2 to the west
**RFI No:** 140
**Reference (dwg, spec):** M3-1, S2.3.2
Subcontractor RFI#
**Reply Requested By:** 2/16/06

**INFORMATION REQUESTED:** **Date:** 2/9/06
This RFI is written to confirm various conversations that have been held over the last few days regarding relocating AHU-2 to the west (The north AHU on the high roof). This decision is a solution to a conflict in structural steel framing the roof and penetrations through roof steel required for 2nd floor above-ceiling MEP. The new location of AHU-2 is to relocate the western "edge" of the equipment so that it is centered over F-line W24 beams, a move of approximately 1'-8" to the west. The W12 beams at approximately F.4 line would shift west an equal distance to provide support for the eastern "edge" of the AHU. The screen wall will remain in the location shown on the contract plans. This shift will likely pose a challenge for the hydronic piping to that AHU which will now be directly over a door alcove below. This challenge will have to be resolved with the involvement of both the mechanical engineer and the mechanical contractor. However, this is the only challenge we foresee at this time. This concept has been discussed amongst the following parties: tBP, Dasse, Ainsworth, SJA, Roscoe and Monterey. Please confirm.

**SUGGESTED SOLUTION:**
**Cost Impact:** ☐ **Schedule Impact:** ☐ days **By:** Mark Delgado

**RESPONSE:** **DATE:** 2.13.06
SEE ATTACHED MEMO RESPONSE

**Attachments:**
By: C. CHIANG / tBP

**TRANSMITTAL RECORD:**

| FROM | TO | DATE |
|---|---|---|
| S.J. AMOROSO | tBP / ARCHITECTURE | 2/9/06 |
| tBP / ARCHITECTURE | ENGINEER/CONSULTANT | 2.9.06 |
| ENGINEER/CONSULTANT | tBP / ARCHITECTURE | 2.13.06 |
| tBP / ARCHITECTURE | S.J. AMOROSO | 2.13.06 |

RFI # 000
Page 1

## Project Memorandum

tBP Architecture Planning Interiors Management

**Date:** 02/13/2006
**To:** S.J. Amoroso, 390 Bridge Parkway, Redwood Shores CA 94065
**Attn:** Mark Delgado
**Proj:** LOS MEDANOS COLLEGE SCIENCE BUILDING, Contra Costa Community College District
**Proj No.:** 20247.00/7.4
**DSA No.:** 01-106226; File # 7-C1
**From:** Celia Chiang, tBP/Architecture
**cc:** T. Beckett, B. Harke, C. Perrotta, file

**RESPONSE TO RFI #140 – PROPOSED RELOCATION OF AHU-2**

The structural engineer, mechanical engineer and Architect have reviewed this RFI regarding the proposed relocation of AHU-2.

Responses are as follows:

DASSE: Relocation of AHU-2 is structurally acceptable.

AAME: Conversations with M. Delgado of SJA are confirmed. Shift of AHU and associated piping appear to be acceptable.

Actual routing of piping to be indicated within shop drawings for review. A complete review can not be done until the AHU is submitted.

Routing shown on M4.4 in door alcove can be relocated if necessary. Since AHU is a custom unit, it may be possible to locate pipe drop thru roof on east side of unit.

tBP: We take no exception to the proposed relocation of the AHU, provided the following items are coordinated:

- Provide credit for deletion of W12X14 previously supporting west edge of AHU-2
- Roof penetrations for pipe drops may require reinforcement at deck openings per details 9, 10, 11/S7.3. Multiple deck openings shall be located per sheet note 10 on S7.3.
- Although there may be no impact to location of vertical supports at screen wall, duct openings through screen wall are to be coordinated with location of vertical supports.
- Location of Mechanical Equipment Curb at AHU-2 per detail 4/7.01 and on A0-7 Roof Horizontal Control plan shall be revised. SJA to issue confirmation RFI noting revised dimensions based on relocation of unit and size of unit per AHU submittal.

1000 Burnett Avenue, Suite 140 • Concord, CA 94520-2058 • Phone: (925) 246-6419 • Fax: (925) 246-6495

**S. J. AMOROSO**
**Request For Information/Clarification**

**DSA FILE NO. 7-C1**
**DSA APPL. No. 01-106226**

**To:** tBP/Architecture, 1000 Burnett Ave, Suite 140, Concord, CA 94520
**Attn:** Celia Chiang, Tom Beckett
**Fax:** 925-246-6495
**Project:** LOS MEDANOS COLLEGE SCIENCE BUILDING, Contra Costa Community College District
tBP p/n: 20247.00
**Subj.:** Rooftop unit BAS cut-ins
**RFI No:** 460
**Reference (dwg, spec.):**
Subcontractor RFI: Matrix 8
**Reply Requested By:** 1/11/07

**INFORMATION REQUESTED:** **Date:** 1/4/07
See attached Matrix RFI No. 8 regarding needed holes in the rooftop AHU's for BAS power. Please confirm that this is acceptable.

**SUGGESTED SOLUTION:**
**Cost Impact:** ☐ **Schedule Impact:** ☐ days **By:** Bryan Newman

**RESPONSE:** **DATE:**

Recommend the following actions:

1. Mechanical Contractor to have AHU representative (Norman Wright) to visit site and verify field conditions as Conduit was to be provided.
2. Commair recommendations appear acceptable if confirmed by Norman Wright.
3. It is AAME's opinion that no added cost should occur to the project based on this RFI.

David Weston / Ainsworth Associates
Jim Weaver / tBP Architecture

1/23/07

RFI # 000
Page 1

**CommAir** — **REQUEST FOR I/INFORMATION**

1001 Shary Circle # 10, Concord, California 94518
(925) 772-9340 / fax (925) 686-5209

DATE 01/03/2007 RFI# 0008
JOB NO 687C00016 BY Chris Olvera
PROJECT LMC Science

TO: Monterey Mechanical, 3665 Wilbur Ave, Antioch, CA 94509, 925-757-4640 Fax 757-0574
ATTN: Dan Riedmiller
DIST

**Title or Section of Work:** Rooftop Unit BAS Cut-ins
**Drawing Location** **Specification Location**
**Cost Impact** ☐ Yes ☐ No **Estimate**
**Time Impact** ☐ Yes ☐ No **Estimate**

**Description of Problem / Attach sketches as required**
1) After a review of the AHUs and the rooftop AC unit it was noted that the factory did not install a conduit run or raceway to get 110V power to the factory mounted BAS controller panels. In at least one instance these factory mounted enclosure are recessed into the unit and no available space outside the panel to run conduit for the 110V power.
2) There is no installed conduit or access point into the units to complete the Infinet wire (communications bus) to the Andover Control module.

**Response Requested By:** Christopher J. Olvera – (510) 772-9340

**Proposed Solution**
1) Therefore we will need to drill a hole inside of the factory installed panel and route to the available 110V power source.
2) We will need to drill a second hole into the units to get the Infinet wire (communication bus) into the Andover control module.
Note: These openings will be sealed with appropriate conduit connections.

**Signed:** Christopher J. Olvera
**Organization:** Carrier
**Date:** 01/03/2007
**Distribution:** ☐ Architect ☐ Super ☐ Mech. Eng ☐ Elec. Eng. ☐ Owner ☐

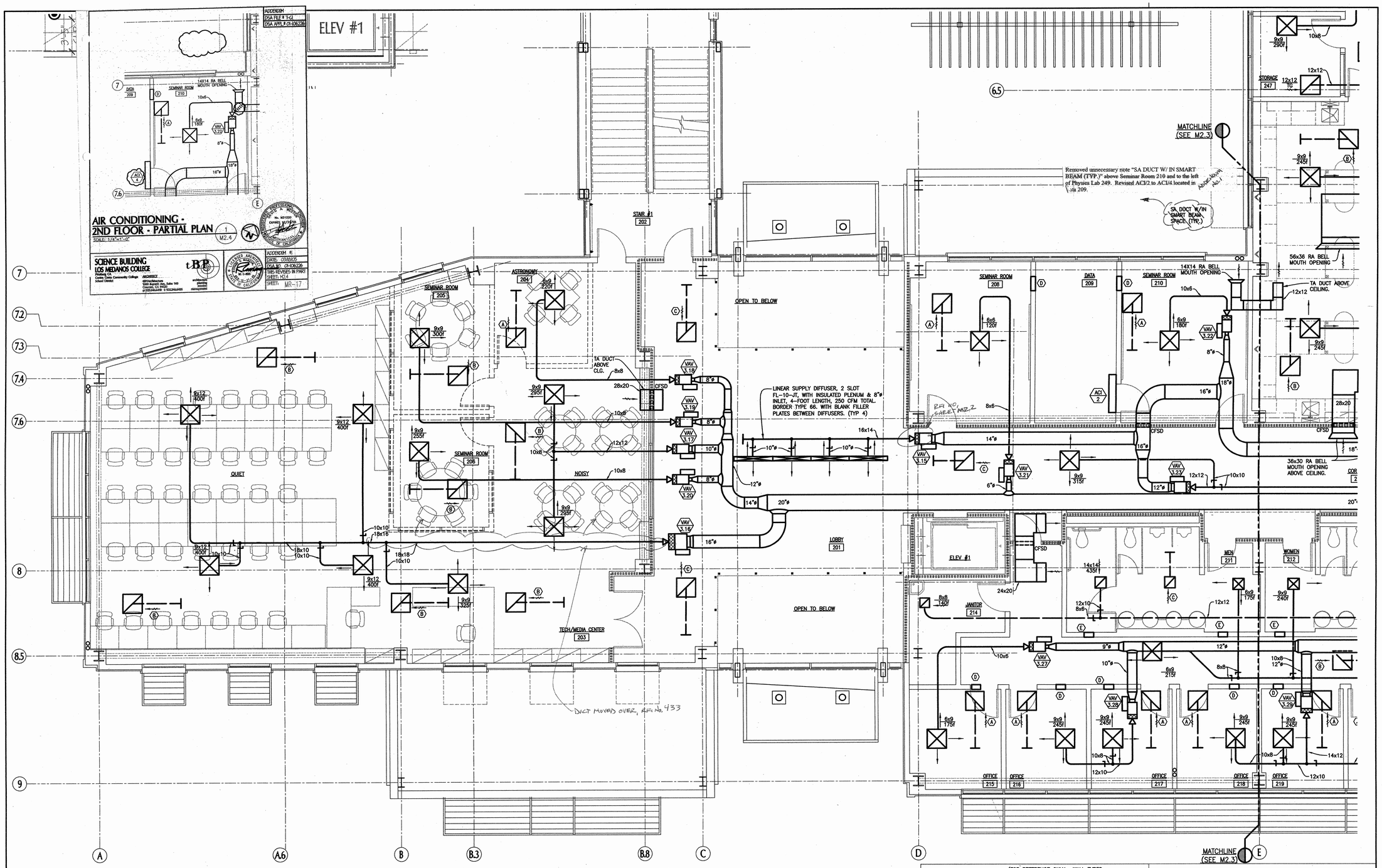


## AIR CONDITIONING - 2ND FLOOR - PARTIAL PLAN

SCALE: 1/4"=1'-0"

1 / M2.4

## WALL TYPES

(FOR REFERENCE ONLY. WALL TYPES ON ARCHITECTURAL DRAWINGS SHALL TAKE PRECEDENCE.)

1-HR FIRE RATED ASSEMBLY

1-HR FIRE RATED ASSEMBLY (OCCUPANCY SEPARATION)

2-HR FIRE RATED ASSEMBLY (AT CHEMICAL WASTE STORAGE ONLY)

STUD PARTITION
REFER TO SHEET 4.02 FOR PARTITION TYPES

## KEY PLAN

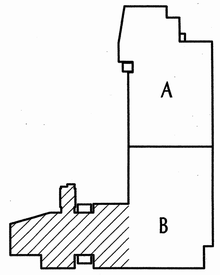



tBP
architecture
planning
interiors
management

tBP/Architecture
1000 Burnett Avenue, Suite 140
Concord, CA 94520
p: 925.246.6419 f: 925.246.6495

architect

AINSWORTH ASSOCIATES
MECHANICAL ENGINEERS
SACRAMENTO, CA
LPS-2003-003

consultant


DSA/DIVISION OF THE STATE ARCHITECT
OFFICE OF REGULATION SERVICES
APPL. 01-106226
DATE 11-15-05

agency

name
address
city, state, zip
p/f:
f/c

# SCIENCE BUILDING LOS MEDANOS COLLEGE

Contra Costa Community College District

owner

tBP project number : 2024100

file name:

drawn by: checked by:

date: NOVEMBER 15, 2004

| Rev: | date: | description: |
|---|---|---|

drawing title:
AIR CONDITIONING - 2ND FLOOR - PARTIAL PLAN

LMC SCIENCE 313-023-T12.01-0-00.00
drawing no:
M2.4
drawing of ?

U:\2023-025\DWG\M2.4-2-1-4.dwg Thes Nov\12\2004-03:46pm

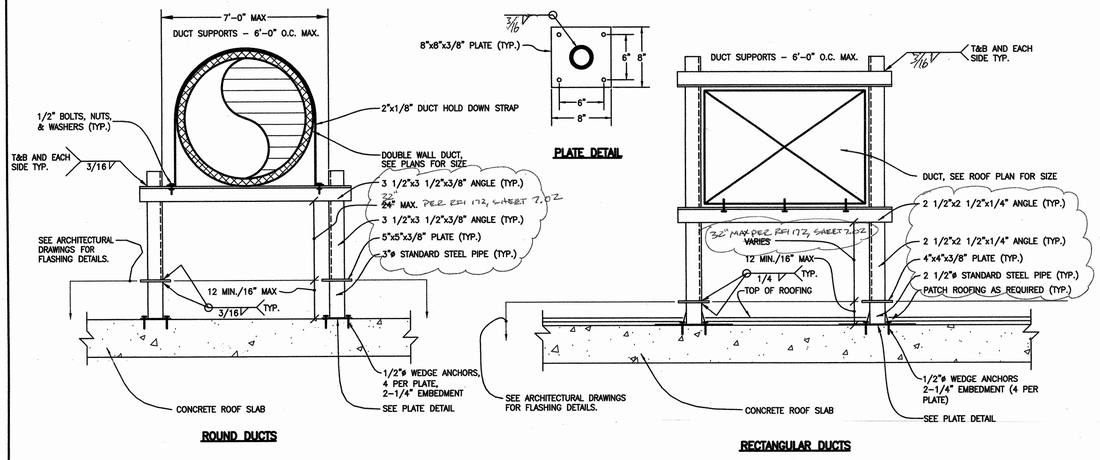


## DUCT SUPPORT ON ROOF DETAIL (3 / M3.1)

NO SCALE

NOTES:
1. REFER TO STRUCTURAL DRAWINGS FOR ANCHOR BOLT MINIMUM EMBEDMENT, DIAMETER, AND TESTING REQUIREMENTS.

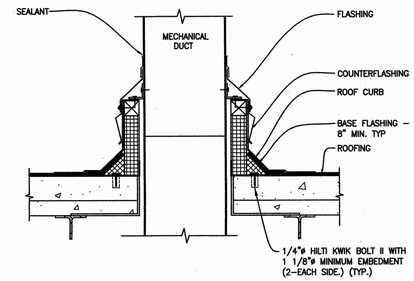


## DUCT THROUGH ROOF AT ROOF CURB (2 / M3.1)

NO SCALE

NOTES:
1. PROVIDE SLOPED ROOF CURB AS REQUIRED TO LEVEL AC UNITS.
2. SEE DETAIL 19 SHEET 7.01 FOR INSTALLATION DETAILS.

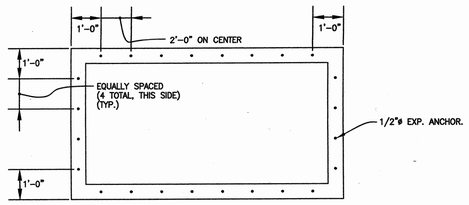


MOUNTING CLIPS LAYOUT PLAN. N.T.S.

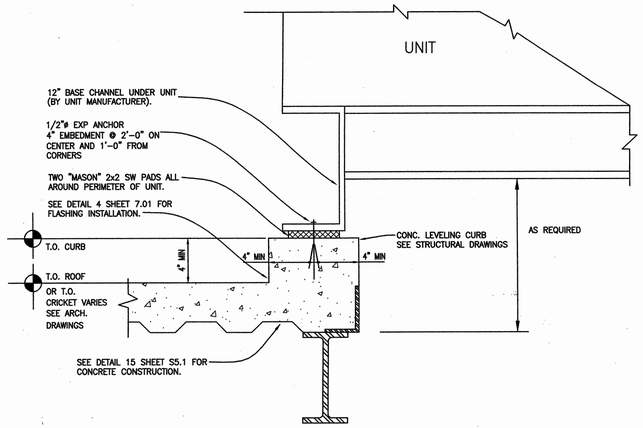


## AIR HANDLING UNIT MOUNTING DETAIL (4 / M3.1)

NO SCALE

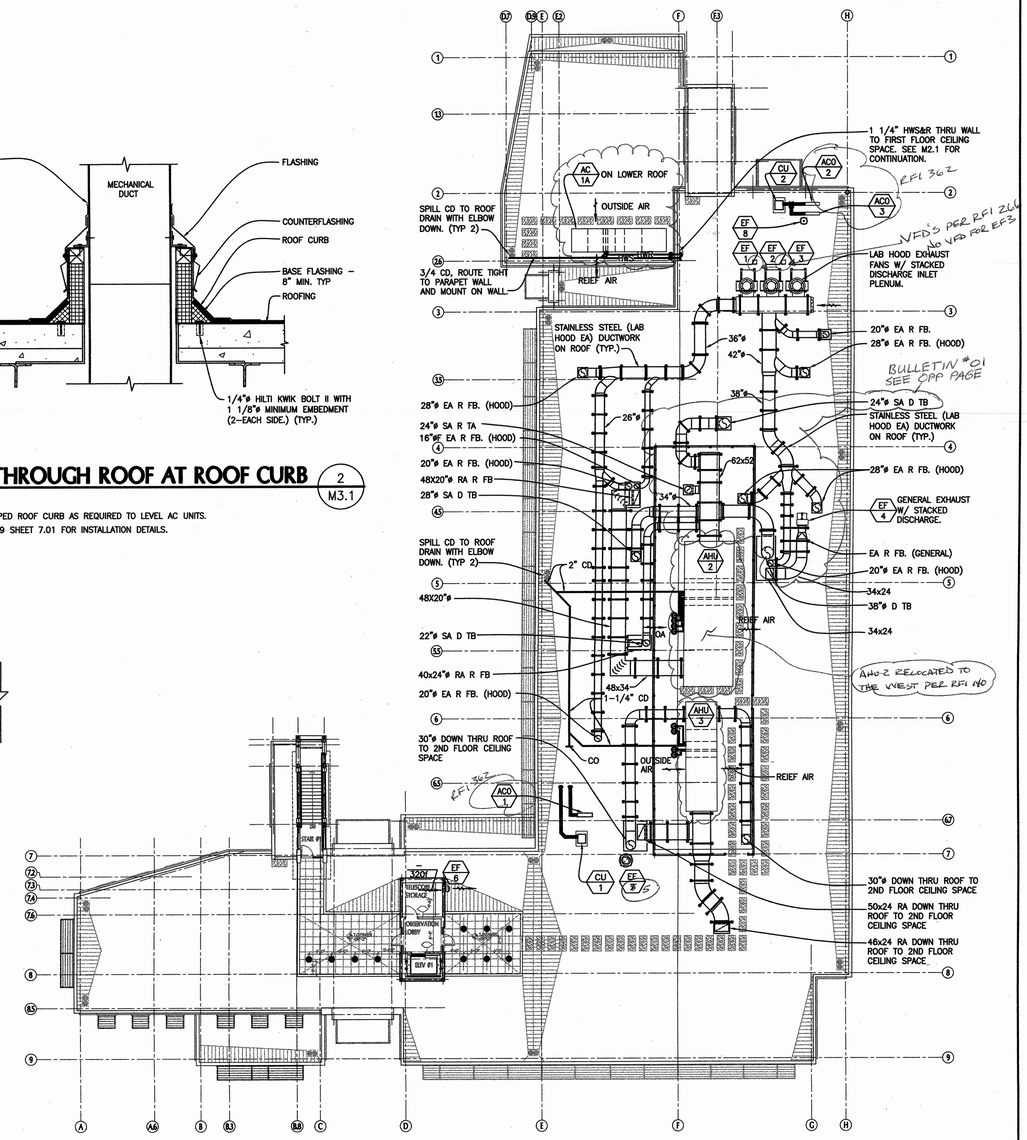


## AIR CONDITIONING - ROOF PLAN (1 / M3.1)

SCALE: 1/16"=1'-0"

Revised AC/1A, AHU-2 and AHU-3 sizes at "Air Conditioning – Roof Plan" 1/M3.1. Moved AC/1A to provided clearances from parapet and building walls at "Air Conditioning – Roof Plan" 1/M3.1. Added ACO/4 next to ACO/1 at "Air Conditioning – Roof Plan" 1/M3.1.

Revised support steel at "Duct Support on Roof Detail" 3/M3.1 to galvanized. Added note "2. Refer to Architectural drawings and specifications for painting galvanized steel when galvanized coating is damaged during installation".

Addendum No. 1

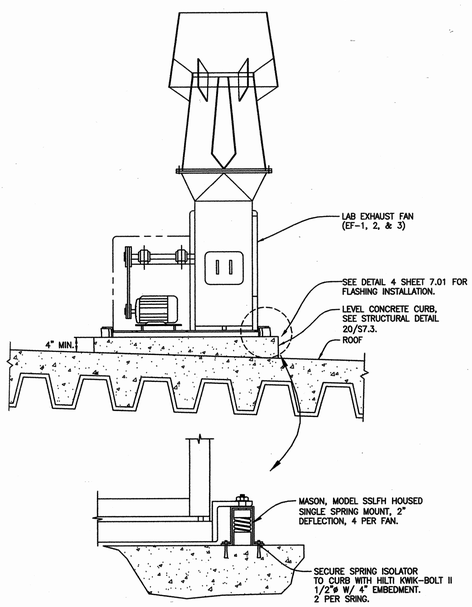


## LAB EXHAUST FAN MOUNTING DETAIL (5 / M3.1)

NO SCALE:

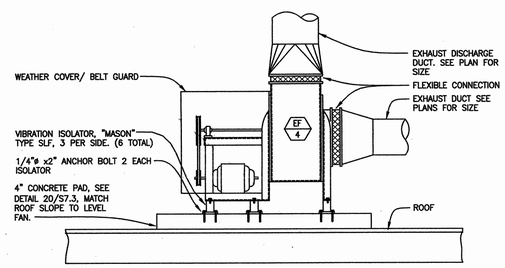


## EXHAUST FAN MOUNTING DETAIL (6 / M3.1)

NO SCALE:

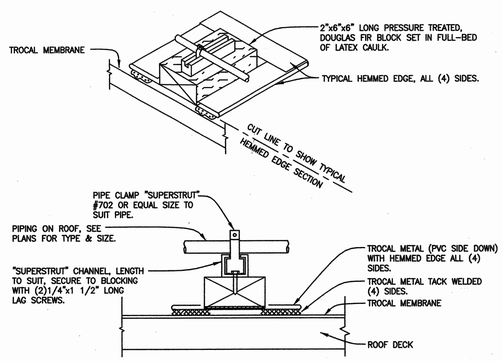


## PIPE SUPPORT ON ROOF (8 / M3.1)

NO SCALE:

NOTE: 1. PROVIDE CODE REQUIRED PITCH IN PIPING SYSTEM, WHERE APPLICABLE, BY VARYING BLOCK HEIGHT (2"MIN.) OR CHANNEL HEIGHT.

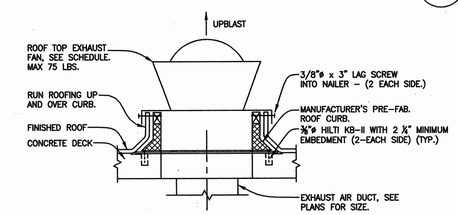


## ROOF TOP EXHAUST FAN DETAIL (7 / M3.1)

NO SCALE:

KEY PLAN

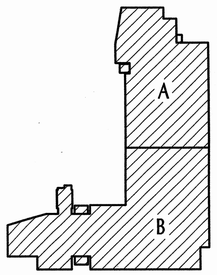



tBP
architecture
planning
interiors
management
tBP/Architecture
1000 Burnett Avenue, Suite 140
Concord, CA 94520
p: 925.246.6419 f: 925.246.6495
architect

AINSWORTH ASSOCIATES
MECHANICAL ENGINEERS
SACRAMENTO, CA
L05-2005-005
consultant


EXPIRATION DATE
DIV. OF ARCHITECTURE
OFFICE OF REGULATION SERVICES
APPL - 09/19/2005
RS RS
DATE

name
address
city, state, zip
ph: fx:
agency

# SCIENCE BUILDING LOS MEDANOS COLLEGE

Contra Costa Community College District

owner

tBP project number : 202411.00
file name:
drawn by: checked by:
date: NOVEMBER 15, 2004

| Rev: | date: | description: |
|---|---|---|

drawing title:
AIR CONDITIONING - ROOF PLAN

LMC SCIENCE 313-023-112.01-0-00.00
drawing no: M3.1
drawing of ?

\2005-005\M\M3\M-S1.dwg Time:Nov\\2004-03-4:1pm

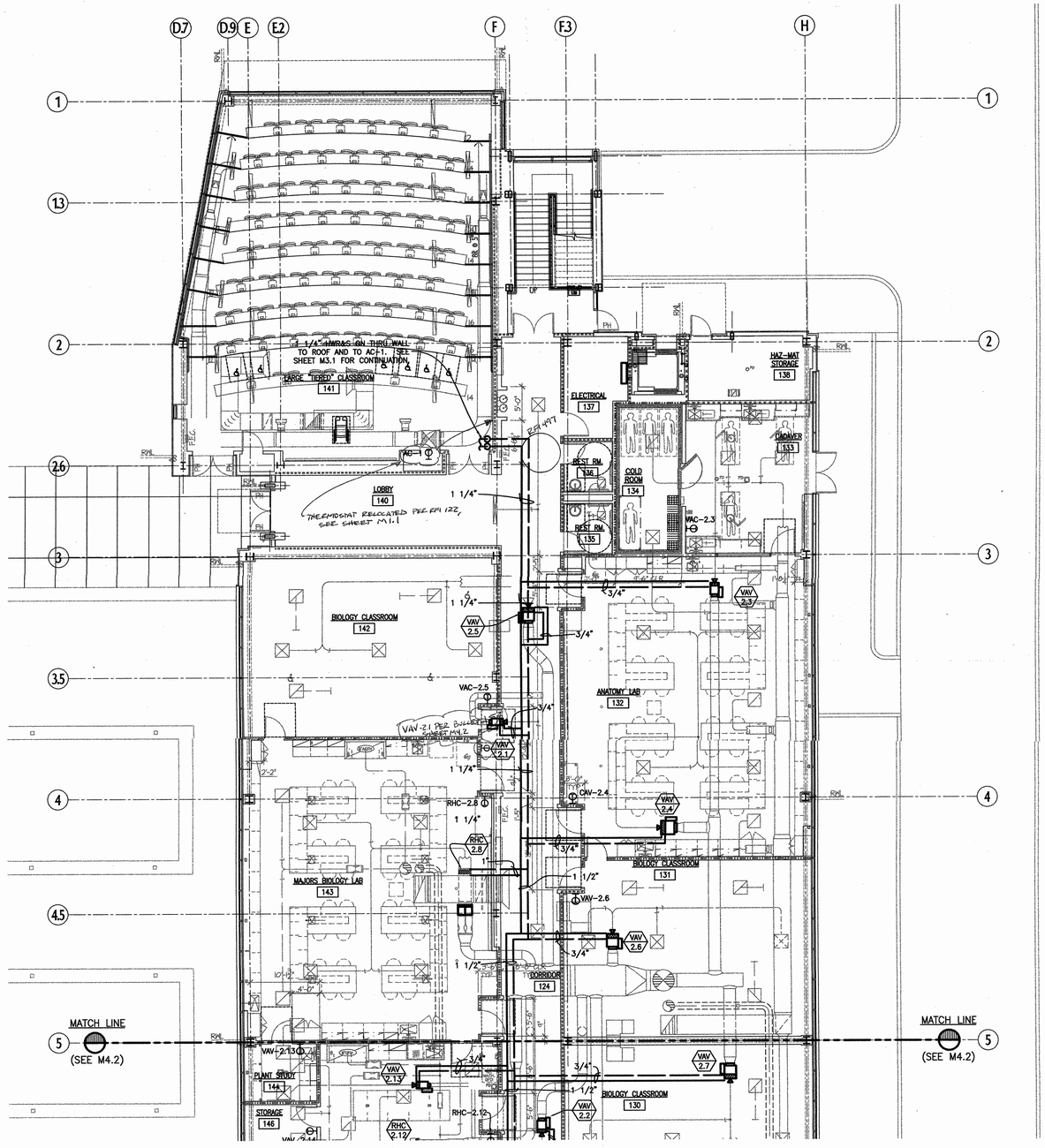


## HYDRONICS - FIRST FLOOR PARTIAL PLAN

SCALE: 1/8"=1'-0"

1 / M4.1

KEY PLAN

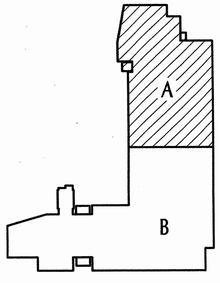



tBP/Architecture
1000 Burnett Avenue, Suite 140
Concord, CA 94520
p: 925.246.6449 f: 925.246.6495


architecture
planning
interiors
management

architect


AINSWORTH ASSOCIATES
MECHANICAL ENGINEERS
SACRAMENTO, CA


JOB: 2003-023

consultant

name
address
city, state, zip
ph:
fx:

agency

# SCIENCE BUILDING
# LOS MEDANOS COLLEGE

Contra Costa Community College District

owner

tBP project number : 20241.00

file name:

drawn by: checked by:

date: NOVEMBER 15, 2004

| Rev: | date: | description: |
|---|---|---|
| | | |

drawing title:
**HYDRONICS - FIRST FLOOR PARTIAL PLAN**

LMC SCIENCE 313-023-T12.01-0-00.00

drawing no:
**M4.1**

drawing of ?

## S. J. AMOROSO
Request For Information/Clarification

DSA FILE NO. 7-C1
DSA APPL. No. 01-106226

To: tBP/Architecture, 1000 Burnett Ave, Suite 140, Concord, CA 94520
Attn: Celia Chiang, Tom Beckett
Fax: 925-246-6495

Project: LOS MEDANOS COLLEGE SCIENCE BUILDING, Contra Costa Community College District
tBP pln: 20247.00

Subj: Existing Underground Hot Water Piping
Reference (dwg, spec):
Reply Requested By: 1/25/06

RFI No: 103
Subcontractor RFI# Monterey 4

INFORMATION REQUESTED: URGENT
Date: 1/20/06

Please note the attached Monterey Mechanical RFI No. 4 regarding Points of Connection for the hydronic piping. Please advise and provide a sketch is necessary.

SUGGESTED SOLUTION:

Cost Impact: ☐ Schedule Impact: ☐ days By: Mark Delgado

RESPONSE: DATE:

Direction 1/26/2006 8:26:29 AM

See attached sketch for new points of connection. Contractor to field verify exact points of connection. Additionally note that (E) sheets show all the pool building are run into the building, turned up 90 degrees and capped. The (N) Science Building is shown on listed 2, sheet M1.5. CONTRACTOR TO PROVIDE DETAILED BREAKDOWN OF CREDIT FOR UNDERGROUND CHANGES IN PLUMBING, FOR JOAN LOOTHAM AGENDA FOR DOC PROVISIONS FOR REVIEW.

Attachments:

By:

TRANSMITTAL RECORD:

| FROM | TO | DATE |
|---|---|---|
| S.J. AMOROSO | tBP / ARCHITECTURE | 1/20/06 |
| tBP / ARCHITECTURE | ENGINEER/CONSULTANT | 1-20-06 |
| ENGINEER/CONSULTANT | tBP / ARCHITECTURE | 1-24-06 |
| tBP / ARCHITECTURE | S.J. AMOROSO | 1-24-06 |
| S.J. AMOROSO | ORIGINATOR | 1-26-06 |

RFI # 000
Page 1

---

MONTEREY MECHANICAL
ENGINEERING CONSTRUCTION FABRICATION
3603 Yellow Ave, Antioch, CA 94509 • Phone (925) 757-6464 • Fax (925) 757-6574

### REQUEST FOR INFORMATION

PROJECT: Los Medanos College Science Building

MMC RFI #: 004

SUBJECT: Existing Underground Hot Water Piping

DATE REQUESTED: 1/24/06

### QUESTION

| FROM: Steve Harris-MMC | TO: Mark G. Delgado-SJA | DATE: 1/19/06 |
|---|---|---|

Reference Drawing: M1.5, M4.2
Reference Specification: Section 15500

After our wet side subcontractor performed a site investigation with your on site superintendent and the L.O.R.; they have informed us that the points of connection for the hydronic HWS/R at both the (E) pool building and the (N) science building are not as shown on the plans. Please clarify the actual points of connection for this piping.

A response is urgent as this piping affects the foundation.
Please Advise

### RESPONSE

| FROM: | TO: | DATE: |
|---|---|---|

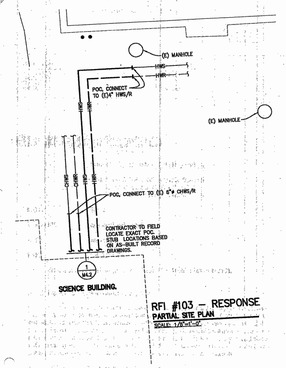


RFI #103 – RESPONSE
PARTIAL SITE PLAN
SCALE: 1/8"=1'-0"

---

## S. J. AMOROSO
Request For Information/Clarification

DSA FILE NO. 7-C1
DSA APPL. No. 01-106226

To: tBP/Architecture, 1000 Burnett Ave, Suite 140, Concord, CA 94520
Attn: Celia Chiang, Tom Beckett
Fax: 925-246-6495

Project: LOS MEDANOS COLLEGE SCIENCE BUILDING, Contra Costa Community College District
tBP pln: 20247.00

Subj: Dimensions of chilled water lines at Line G— INSIDE THE BUILDING
Reference (dwg, spec): Addendum #1

RFI No: 155.1
Subcontractor RFI: Matrix 3

Reply Requested By: 2/27/06

INFORMATION REQUESTED: URGENT
Date: 2/23/06

Original text or RFI No. 155:
*Please note the attached Matrix (Monterey Mechanical Sub) RFI regarding the chilled water lines that were moved towards line G in addendum No. 1. Please provide a dimension from line G to the CHWS, CHWR, HWS and HWR lines.*

RFI No. 155.1:
The addendum no. 1 change referenced is per sketch MR-20 which moved the stub-up locations within the building.

The response to this RFI provided information on POC locations on the building exterior. We had that information from pre-bus field verification. The information that is needed is the location of the CHWS CHWR, HWS and HWR line stub-ups WITHIN the building. We need dimensions off of grid lines to locate these as we are not to scale the drawings. Please provide dimensional information to locate stub-up locations.

SUGGESTED SOLUTION:

Cost Impact: ☐ Schedule Impact: ☐ days By: Mark Delgado

RESPONSE: DATE:

Response number: 1
Response from:
Subject line:
Date: 2/28/2006 9:03:49 AM
Text: Dimensions of the CHWS/R and HWS/R needs to be coordinated by the Contractor with all other trades. The exact location along the south wall of the mechanical room is not critical, but needs to be coordinated with the location of the vacuum pump and domestic cold water riser. See attached for our recommendation. Also note that Contractor can stagger the shut off valve height if needed for coordination (hold shut off valves within riser between 30" and 48" AFF).

Attachments:

By:

TRANSMITTAL RECORD:

| FROM | TO | DATE |
|---|---|---|
| S.J. AMOROSO | tBP / ARCHITECTURE | 2/23/06 |
| tBP / ARCHITECTURE | ENGINEER/CONSULTANT | 2-28-06 |

RFI # 000
Page 1

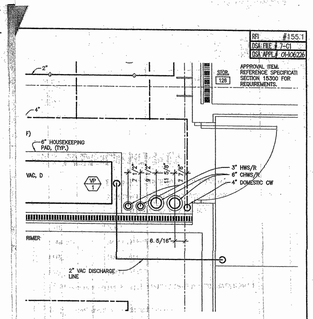


---

## Bulletin No.52

Date: 11/1/2006

To: S.J. Amoroso Construction, 390 Bridge Parkway, Redwood shores CA 94065

Project: LOS MEDANOS COLLEGE SCIENCE BUILDING
Contra Costa Community College District
DSA No. 01-106226; File # 7-C1
tBP P/N 20247.00

Description: REFERENCE: Sheet M4.2, M4.4 and M5.2, RFI #386

Adjust locations of thermostats per coordination with furniture as indicated in the attached sketches. Sketches also address thermostats locations associated with RFI 386. Reference SKM-52.1 to SKM-52.4.

No cost shall apply to owner as Contract Documents require one thermostat per VAV box. Quantity of thermostats are not in questions, just location. It is also our understanding from conversations with the Controls Subcontractor that the subject stats have yet to be installed; therefore, no re-work is required.

Issued By: Architect
Requested By: Mechanical, Owner
Reason: Furniture coordination to locations of thermostats
Enclosures: SKM-52.1 to SKM-52.4

Distribution:

| Copies: | Name: | Organization: |
|---|---|---|
| 1 copy | Mark Delgado | S. J. Amoroso |
| 1 copy | Cam Perrotta | CCCC District |
| 1 copy | Bob Harke | Inspector of Record |
| 1 copy | Tom Beckett | tBP/Architecture |
| 1 copy | File 20247.007.4 | tBP/Architecture |
| 1 copy | Dave Weston | AAMII |
| 1 copy | Stephanie O'Brian | Dovetail |

Action:
☒ For Information/Clarification only
☐ Provide Price/Credit Proposal. (Refer to this Bulletin No. when responding)
☐ Requires DSA review and approval
☐ Proceed as authorized by District

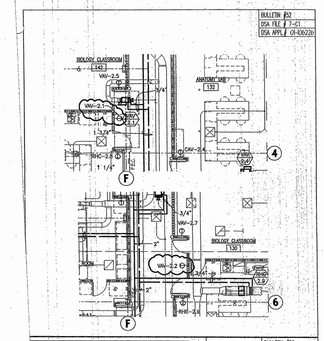


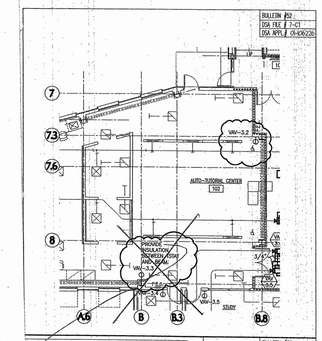


---

## Bulletin No.52 (Revised 11/6/06)

Date: 11/6/2006

To: S.J. Amoroso Construction, 390 Bridge Parkway, Redwood shores CA 94065

Project: LOS MEDANOS COLLEGE SCIENCE BUILDING
Contra Costa Community College District
DSA No. 01-106226; File # 7-C1
tBP P/N 20247.00

Description: REFERENCE: Sheet M4.2, M4.4 and M5.2, RFI #386

Adjust locations of thermostats per coordination with furniture as indicated in the attached sketches. Sketches also address thermostats locations associated with RFI 386. Reference SKM-52.1, SKM-52.2R1, SKM-52.3 to SKM-52.4.

No cost shall apply to owner as Contract Documents require one thermostat per VAV box. Quantity of thermostats are not in questions, just location. It is also our understanding from conversations with the Controls Subcontractor that the subject stats have yet to be installed; therefore, no re-work is required.

Issued By: Architect
Requested By: Mechanical, Owner
Reason: Furniture coordination to locations of thermostats
Enclosures: SKM-52.1, SKM-52.2R1, SKM-52.3 to SKM-52.4.

Distribution:

| Copies: | Name: | Organization: |
|---|---|---|
| 1 copy | Mark Delgado | S. J. Amoroso |
| 1 copy | Cam Perrotta | CCCC District |
| 1 copy | Bob Harke | Inspector of Record |
| 1 copy | Tom Beckett | tBP/Architecture |
| 1 copy | File 20247.007.4 | tBP/Architecture |
| 1 copy | Dave Weston | AAMII |
| 1 copy | Stephanie O'Brian | Dovetail |

Action:
☒ For Information/Clarification only
☐ Provide Price/Credit Proposal. (Refer to this Bulletin No. when responding)
☐ Requires DSA review and approval
☐ Proceed as authorized by District

tBP/Architecture 1000 Burnett Ave, Suite 140

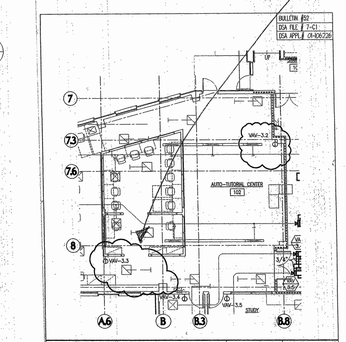


Los Medanos College
4CD Proj. #: L-565-B-23-SC
**Science Building**

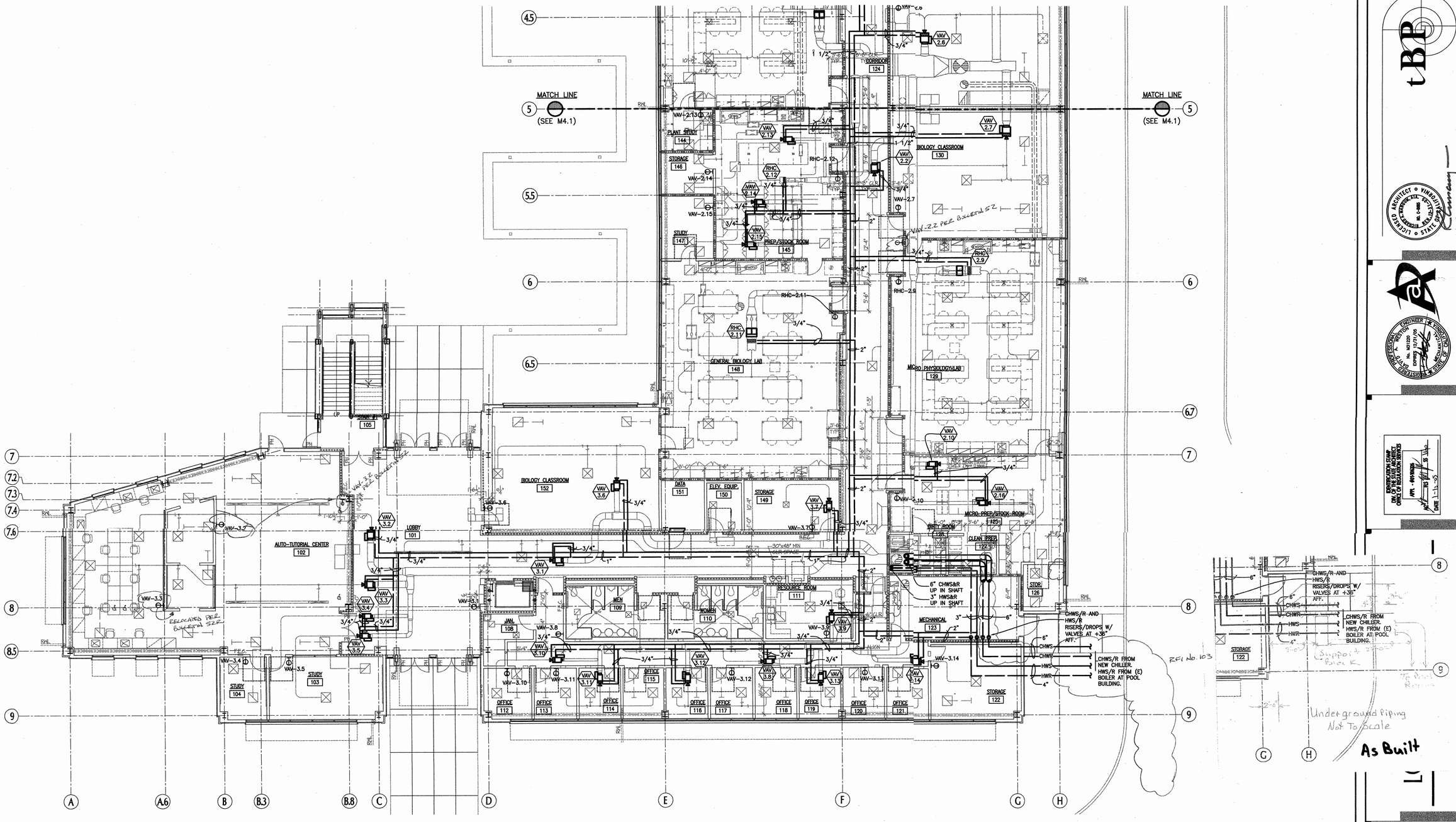


## HYDRONICS - FIRST FLOOR PARTIAL PLAN

1 / M4.2

SCALE: 1/8"=1'-0"

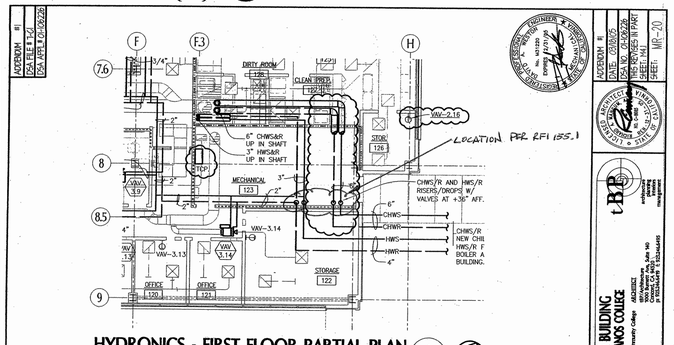


HYDRONICS - FIRST FLOOR PARTIAL PLAN

1 / M4.2

SCALE: 1/8"=1'-0"

ADDENDUM #1
RSA FILE # 1-2
RSA VER # 05.06.06

ADDENDUM #1
DATE: 09/09/05
THIS REVISES 1 PART
SHEET: MR-201

SCIENCE BUILDING
LOS MEDANOS COLLEGE
Contra Costa Community College District
ARCHITECT
tBP/Architecture
1000 Burnett Ave., Suite 140
Concord, CA 94520
p: 925.246.6495 f: 925.246.6499

## KEY PLAN

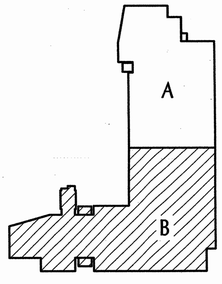


Moved CHWS&R and HWS&R closer to exterior door.
ADDENDUM No.1

of Mechanical 123 at "Hydronics – First Floor Partial Plan" 1/M4.2. Added temperature sensor for VAV-2.16 in Storage 126 at "Hydronics – First Floor Partial Plan" 1/M4.2. Added TCP location in Mechanical Room 123.

tBP
architecture
planning
interiors
management

LICENSED ARCHITECT
STATE OF CALIFORNIA

tBP/Architecture
1000 Burnett Avenue, Suite 140
Concord, CA 94520
p: 925.246.6419 f: 925.246.6495

architect

AINSWORTH ASSOCIATES
MECHANICAL ENGINEERS
SACRAMENTO, CA
LPS-2005-005

consultant

ENVIRONMENTAL STAMP
DIV. OF THE STATE ARCHITECT
OFFICE OF REGULATION SERVICES
APPL. - 101-110020
DATE 1-11-05

name
address
city, state, zip
ph: fx

agency

Contra Costa Community College District

owner

tBP project number : 2024100

file name:

drawn by: checked by:

date: NOVEMBER 15, 2004

| Rev. | date: | description: |
|---|---|---|
| | | |

drawing title:
HYDRONICS -
FIRST FLOOR PARTIAL PLAN

LMC SCIENCE 313-023-112.01-0-00.00
drawing no.:
M4.2
drawing of ?

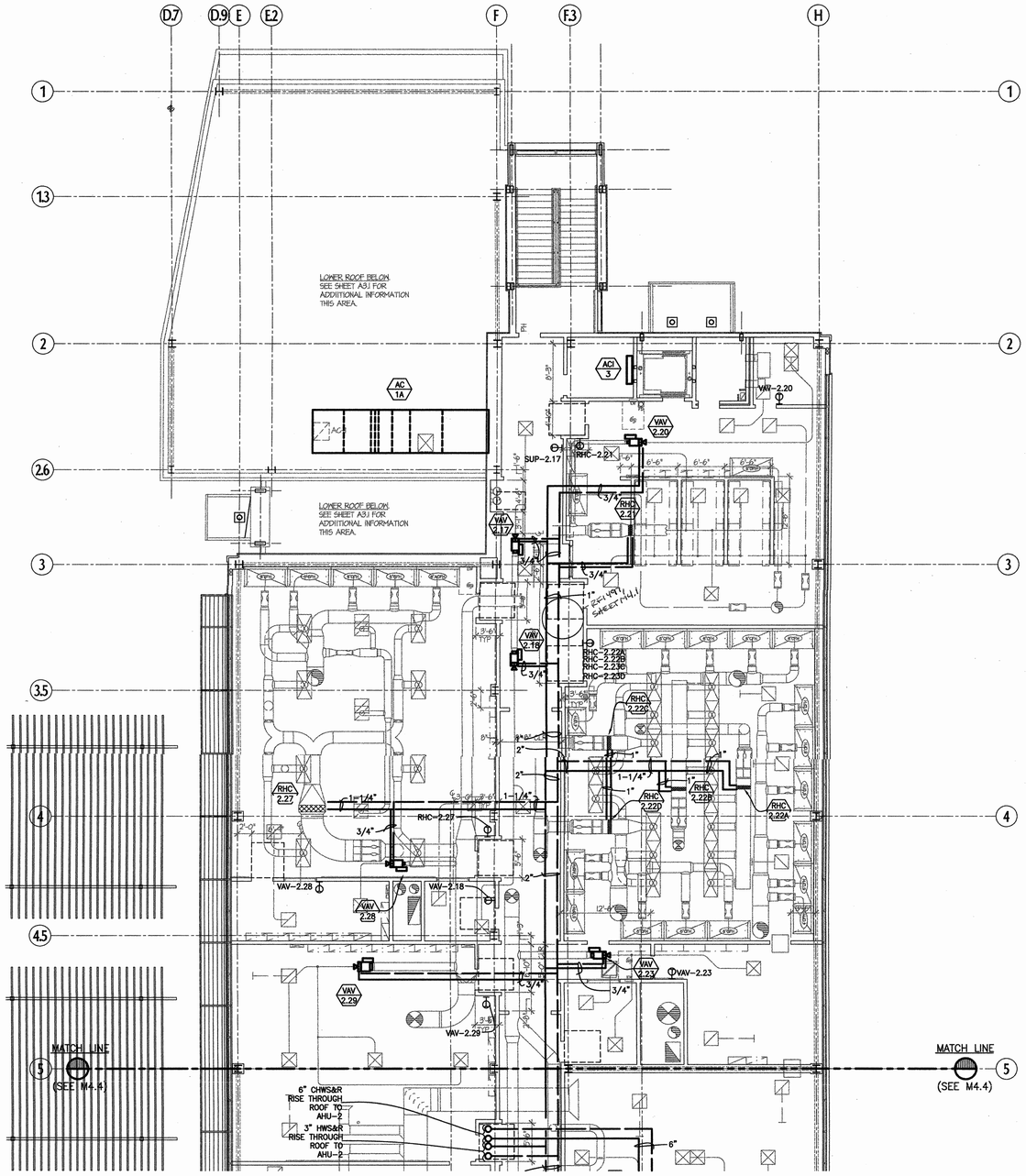


## HYDRONICS - SECOND FLOOR PARTIAL PLAN

SCALE: 1/8"=1'-0"

1 / M4.3

KEY PLAN

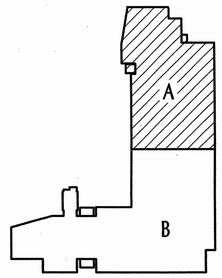



tBP
architecture
planning
interiors
management

tBP/Architecture
1000 Burnett Avenue, Suite 140
Concord, CA 94520
p: 925.246.6419 f: 925.246.6495

architect

AINSWORTH ASSOCIATES
MECHANICAL ENGINEERS
SACRAMENTO, CA
LCB: 2023-023

consultant


EXHIBIT CLEARANCE
DSA, DIVISION OF THE STATE ARCHITECT
OFFICE OF REGULATION SERVICES
APPL - 04-109026
DATE

name
address
city, state, zip
ph: fax

agency

# SCIENCE BUILDING
# LOS MEDANOS COLLEGE

Contra Costa Community College District

owner

tBP project number : 2024.00

file name:

drawn by: checked by:

date: NOVEMBER 15, 2004

| Rev: | date: | description: |
|---|---|---|
| | | |

drawing title:
**HYDRONICS - SECOND FLOOR PARTIAL PLAN**

LMC SCIENCE 313-023-112.01-0-00.00

drawing no.:
**M4.3**

drawing of ?

\2023-023\DWG\M-4.3-1.dwg Thu,Nov\1,2004-03:16pm

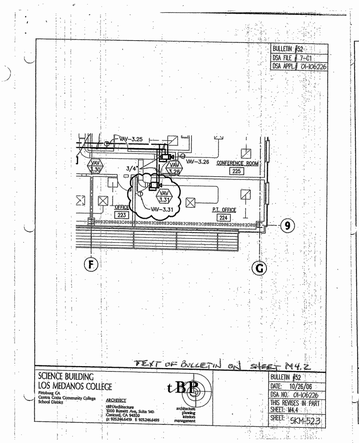
BULLETIN #52
DSA FILE # 7-21
DSA APPL # 04-106726
VAV-3.25
VAV-3.26
CONFERENCE ROOM
226
VAV-3.27
VAV-3.31
P.I. OFFICE
224
LATRINE
223
9
F
G
TEXT OF BULLETIN on SHEET M4.2
SCIENCE BUILDING
LOS MEDANOS COLLEGE
Pittsburg CA
Contra Costa Community College
School District
ARCHITECT
BBVarchitecture
3500 Bonaire Ave, Suite 140
Bakersfield, CA 93309
p: 661.324.6400 f: 661.324.6401
tBP
BUILDING
DESIGN
MANAGEMENT
BULLETIN #52
DATE: 10/26/06
DSA NO.: 04-106726
THIS REVISES IN PART
SHEET: M4.4
SHEET: SKM-523

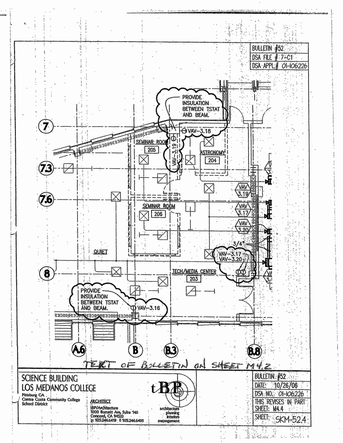
BULLETIN #52
DSA FILE # 7-21
DSA APPL # 04-106726
PROVIDE INSULATION BETWEEN TSTAT AND SEAL.
VAV-3.16
SEMINAR ROOM
205
ASTRONOMY
204
7
7.3
7.6
SEMINAR ROOM
206
QUIET
TECH/MEDIA CENTER
203
8
PROVIDE INSULATION BETWEEN TSTAT AND SEAL.
VAV-3.18
A.6
B
B.3
B.8
TEXT OF BULLETIN on SHEET M4.2
SCIENCE BUILDING
LOS MEDANOS COLLEGE
Pittsburg CA
Contra Costa Community College
School District
ARCHITECT
BBVarchitecture
3500 Bonaire Ave, Suite 140
Bakersfield, CA 93309
p: 661.324.6400 f: 661.324.6401
tBP
BUILDING
DESIGN
MANAGEMENT
BULLETIN #52
DATE: 10/26/06
DSA NO.: 04-106726
THIS REVISES IN PART
SHEET: M4.4
SHEET: SKM-524

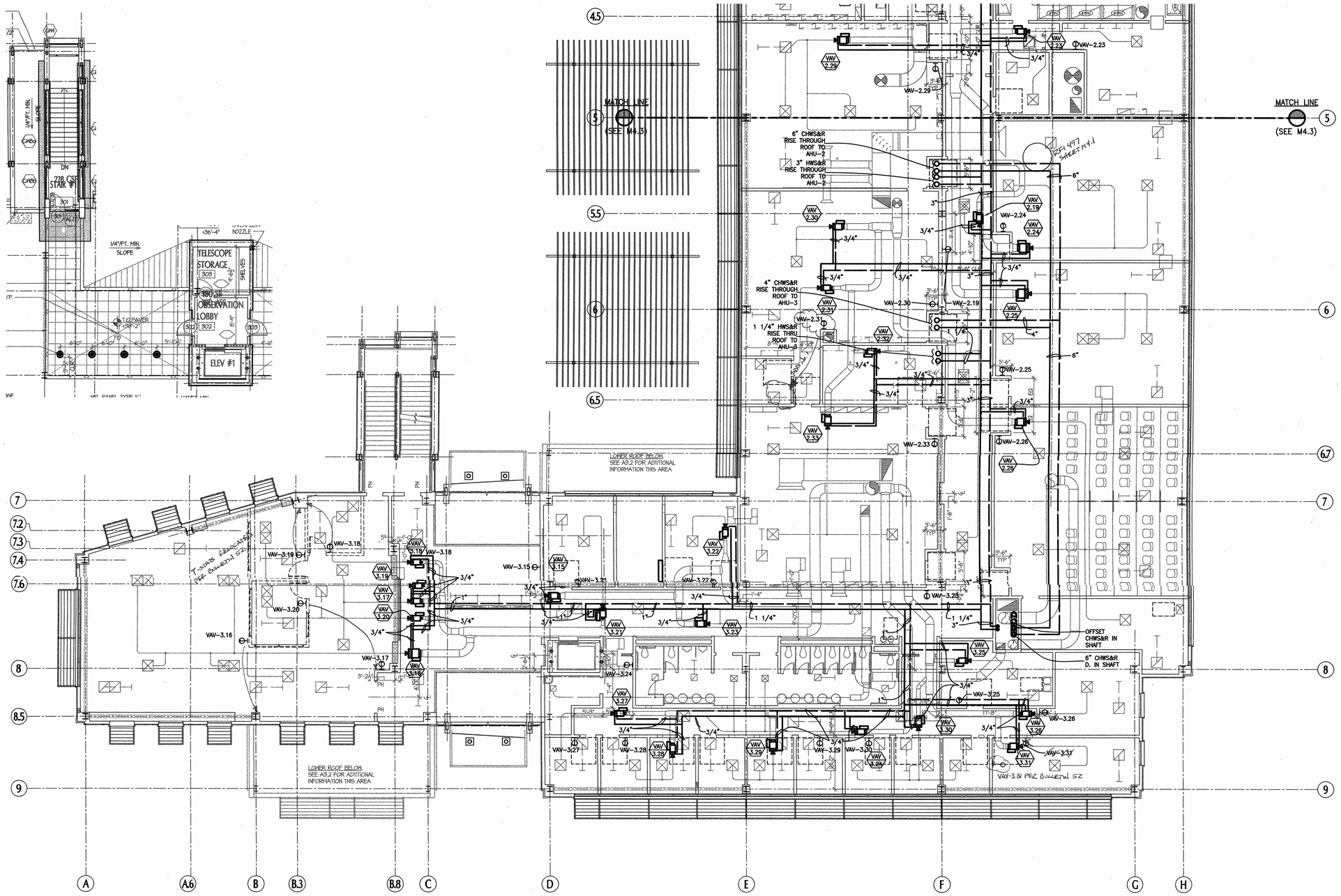


## HYDRONICS - SECOND FLOOR PARTIAL PLAN

1 / M4.4

SCALE: 1/8"=1'-0"

Moved temperature sensor for VAV 2.31 to wall next to interior door in Storage 247 at "Hydronics – Second Floor Partial Plan" 1/M4.4. ADDENDUM No. 1

KEY PLAN

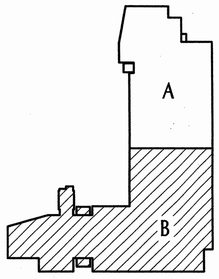


ADDENDUM #1
DSA FILE # 7-51
DSA APPL # 01-106226

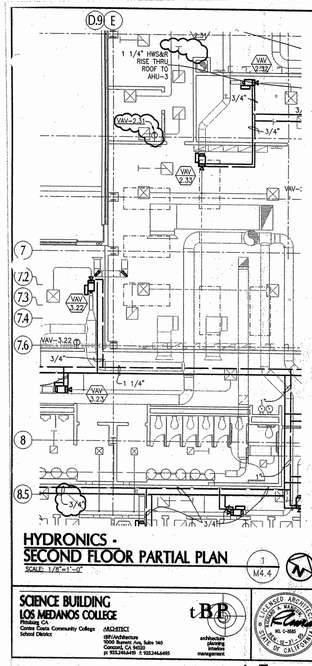

HYDRONICS - SECOND FLOOR PARTIAL PLAN

1 / M4.4

SCALE: 1/8"=1'-0"

SCIENCE BUILDING
LOS MEDANOS COLLEGE
Pittsburg, CA
Contra Costa Community College District

ARCHITECT
tBP/Architecture
1000 Burnett Ave, Suite 140
Concord, CA 94520
p: 925.246.6419 f: 925.246.6495

tBP

ADDENDUM #1
DATE: 03/28/05
DSA NO. 01-106226
THIS REVISES IN PART
SHEET: M4.4
SHEET: MR-21

tBP/Architecture
1000 Burnett Avenue, Suite 140
Concord, CA 94520
p: 925.246.6419 f: 925.246.6495

architecture
planning
interiors
management

architect

AINSWORTH ASSOCIATES
MECHANICAL ENGINEERS
SACRAMENTO, CA

consultant

DIV. OF STATE ARCHITECT
OFFICE OF REGULATION SERVICES
APP. 01-106226
DATE 1-11-05

name
address
city, state, zip
ph:
fx:

agency

SCIENCE BUILDING
LOS MEDANOS COLLEGE

Contra Costa Community College District

owner

tBP project number : 20241.00

file name:

drawn by: checked by:

date: NOVEMBER 15, 2004

| Rev: | date: | description: |
|---|---|---|

drawing title:
HYDRONICS -
SECOND FLOOR PARTIAL PLAN

LMC SCIENCE 313-023-112.01-0-00.00

drawing no.:
M4.4

drawing of ?

\2023-023\DWGS\H-13-4.dwg Tues,Nov\\2004-03:46pm

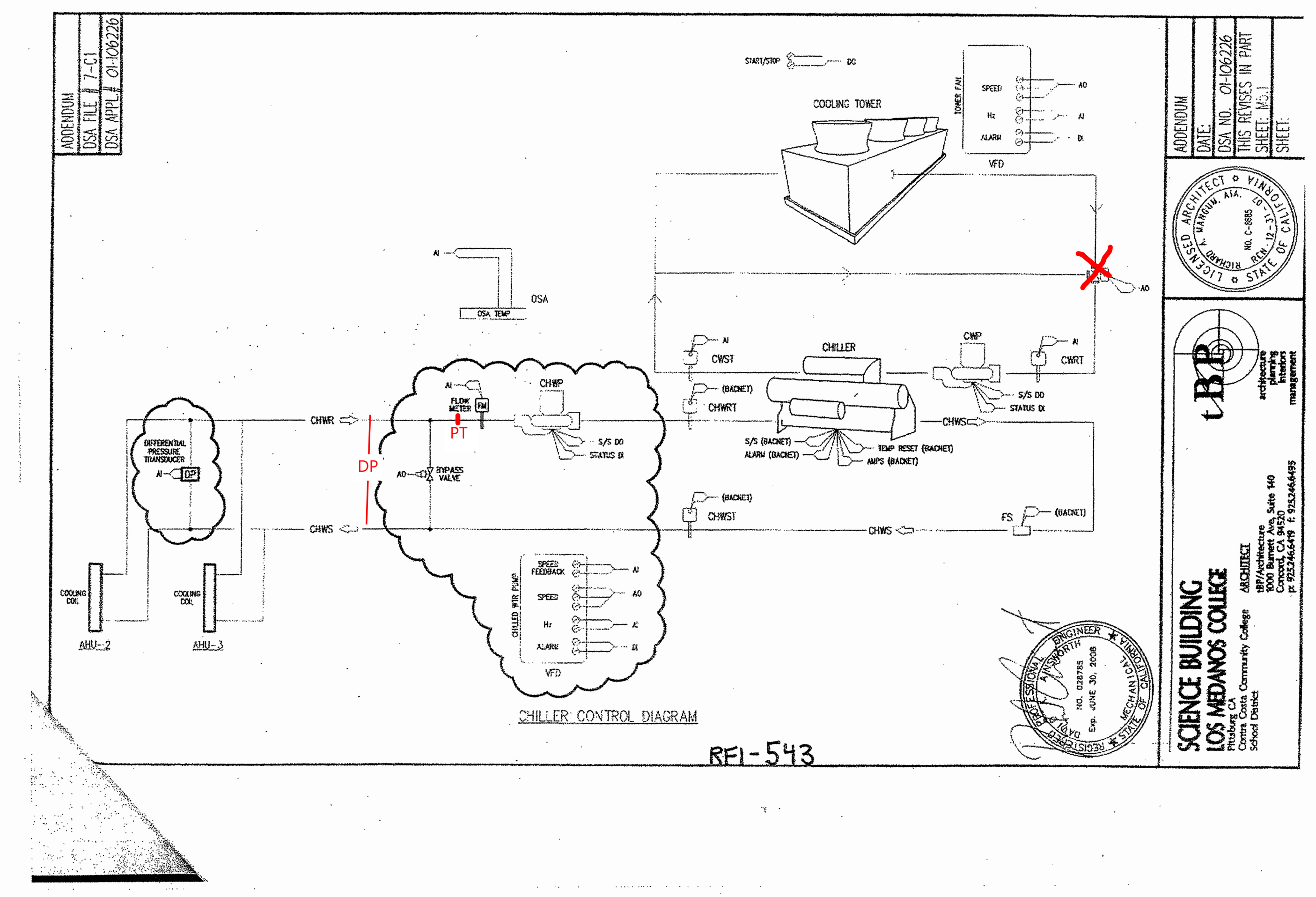
CHILLER CONTROL DIAGRAM
RFI-543

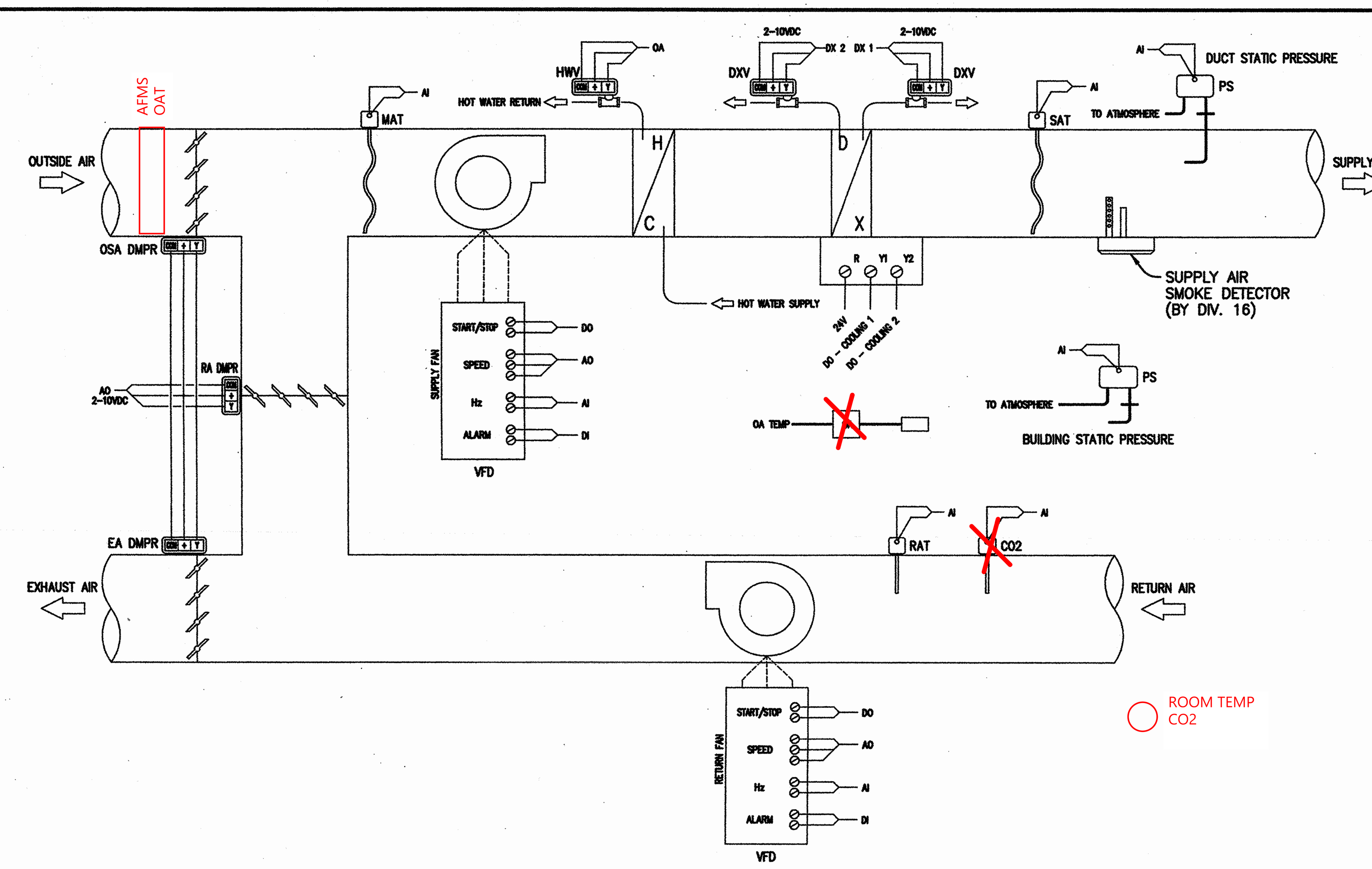


AC UNIT CONTROL (AC1)

SUPPLY AND RETURN FAN CONTROL

THE FANS SHALL BE TURNED ON WHEN THE UNIT IS ENABLED TO RUN (SCHEDULED ON). IF THE UNIT IS NOT ENABLED TO RUN (SCHEDULED OFF) THE FANS SHALL BE TURNED OFF. AFTER THE FAN IS TURNED OFF, A FIVE MINUTE TIME DELAY MUST ELAPSE BEFORE THE FAN CAN BE TURNED BACK ON.

SUPPLY FAN VFD CONTROL

WHEN THE FAN IS ON THE VFD SHALL RAMP TO MAINTAIN A DUCT STATIC SET POINT OF 1.0 I.W.C (ADJUSTABLE). WHEN THE FAN IS OFF THE VFD SHALL RAMP TO 0 HZ.

RETURN FAN VFD CONTROL

WHEN THE RETURN FAN IS ON THE RETURN FAN VFD SHALL RAMP TO MAINTAIN A BUILDING STATIC SET POINT OF 0.025 I.W.C (ADJUSTABLE). WHEN THE FAN IS OFF THE VFD SHALL RAMP TO 0 HZ.

DX COOLING CONTROL

WHEN THE FAN IS ON AND THE FAN HAS PROOF OF AIR FLOW AND A REQUEST FOR COOLING IS ON AND THE REQUEST FOR HEATING IS OFF AND THE SUPPLY AIR TEMPERATURE IS ABOVE 62 DEGREES THEN THE FIRST STAGE OF COOLING SHALL BE TURNED ON. IF THE SUPPLY AIR TEMPERATURE IS ABOVE 62 DEGREES FOR FIVE MINUTES THE SECOND STAGE OF COOLING SHALL BE TURNED ON. IF THE REQUEST FOR COOLING IS OFF OR THE REQUEST FOR HEATING IS ON OR THE FAN STATUS IS OFF OR THE FAN IS OFF THEN THE COOLING SHALL BE TURNED OFF. IF THE SUPPLY AIR TEMPERATURE SHOULD FALL BELOW THE LOW LIMIT LOCKOUT SET POINT OF 44 DEGREES ONE STAGE OFF COOLING SHALL BE TURNED OFF FOR A FIVE MINUTE TIME DELAY.

COOLING REQUEST

THE REQUEST FOR COOLING SHALL BE TURNED ON WHEN MORE THAN 40% (ADJUSTABLE) OF THE TOTAL ZONES OCCUPIED ARE CALLING FOR COOLING. THE REQUEST FOR COOLING SHALL BE TURNED OFF IF THERE ARE NO ZONES CALLING FOR COOLING.

HW VALVE CONTROL

WHEN THE SUPPLY FAN IS ON AND A REQUEST FOR HEATING IS ON THE HW VALVE SHALL MODULATE TO MAINTAIN IT'S SUPPLY AIR SET POINT OF 120 DEGREES (ADJUSTABLE). WHEN THE SUPPLY FAN IS OFF THE HW VALVE SHALL MOVE TO THE CLOSED POSITION.

HEATING REQUEST

WHEN THE FAN IS ON AND THE MAX ZONE TEMP DIFF IS EQUAL TO OR BELOW MINUS THREE (−3) DEGREES, THE HEATING REQUEST SHALL BE TURNED ON.

ECONOMIZER CONTROL

WHEN THE SUPPLY FAN IS ON AND THE OUTSIDE AIR TEMPERATURE IS BELOW THE OUTSIDE AIR LOCKOUT SET POINT (ADJUSTABLE) OF 68 DEGREES MINUS 2 (−2) DEGREES AND THE OUTSIDE AIR TEMPERATURE IS BELOW THE RETURN AIR TEMPERATURE MINUS 2 (−2) DEGREES THE OUTSIDE AIR DAMPERS SHALL MODULATE TO MAINTAIN A MIXED AIR SET POINT. IF THE OUTSIDE AIR TEMPERATURE RISES ABOVE THE OUTSIDE AIR LOCKOUT SET POINT OR THE OUTSIDE AIR RISES ABOVE THE RETURN AIR THE DAMPERS SHALL MODULATE TO THEIR MINIMUM POSITION TO MAINTAIN ITS CO2 LEVEL SET POINT OF 700PPM. THE DAMPERS SHALL CLOSE WHEN THE FAN IS TURNED OFF.

MIXED AIR SET POINT SCHEDULE

| MAX VAV ZONE TEMP DIFF | MA SET POINT |
|---|---|
| 0 | 70 |
| 0.5 | 62.5 |
| 1 | 55 |

MAX VAV ZONE TEMP DIFF = (VAV ZONE TEMPERATURE − VAV ZONE SET POINT)

ALARMS

* IF THE SUPPLY FAN IS ON AND A VFD FAULT IS DETECTED A SUPPLY FAN VFD FAILURE ALARM SHALL BE GENERATED.
* IF THE RETURN FAN IS ON AND A VFD FAULT IS DETECTED A RETURN FAN VFD FAILURE ALARM SHALL BE GENERATED.
* IF THE SUPPLY FAN IS ON AND THE DUCT STATIC IS NOT BETWEEN +/− 0.2 IWC OF IT'S SET POINT FOR 10 MINUTES A DUCT STATIC ALARM SHALL BE GENERATED.
* IF THE RETURN FAN IS ON AND THE BUILDING STATIC IS NOT BETWEEN +/− 0.1 IWC OF ITS SET POINT FOR 10 MINUTES A BUILDING STATIC ALARM SHALL BE GENERATED.
* IF THE SUPPLY FAN IS ON AND THE CO2 LEVEL ARE GREATER THAN 1000PPM FOR 5 MINUTES A HIGH CO2 LEVEL ALARM SHALL BE GENERATED. WHEN THE CO2 LEVEL GOES BELOW 800PPM THE ALARM SHALL CLEAR.

CONTROL DIAGRAM AC1

| TAG | ITEM |
|---|---|
| 12865 | 12865 INFINITY VAV CONTROLLER |
| CHWP | CHILLED WATER VALVE PUMP |
| CHWR | CHILLED WATER RETURN |
| CHWRT | CHILLED WATER RETURN TEMPERATURE |
| CHWS | CHILLED WATER SUPPLY |
| CHWST | CHILLED WATER SUPPLY TEMPERATURE |
| CHWV | 2 WAY CHILLED WATER VALVE |
| CT | CURRENT TRANSDUCER |
| CW | CONDENSOR WATER |
| CWP | CONDENSOR WATER PUMP |
| CWRT | CONDENSOR WATER RETURN TEMPERATURE |
| CWST | CONDENSOR WATER SUPPLY TEMPERATURE |
| DMPR | DAMPER |
| EA | EXHAUST AIR |
| FS | FLOW STATUS |
| HWP | HOT WATER PUMP |
| HWR | HOT WATER RETURN |
| HWRT | HOT WATER RETURN TEMPERATURE |
| HWS | HOT WATER SUPPLY |
| HWST | HOT WATER SUPPLY TEMPERATURE |
| HWV | 2 WAY HOT WATER VALVE |
| MAT | MIXED AIR TEMP. SENSOR – AVERAGING |
| OSA | OUTSIDE AIR |
| PS | DIFFERENTIAL PRESSURE TRANSDUCER |
| RA | RETURN AIR |
| RAT | RETURN AIR TEMPERATURE SENSOR |
| SAT | SUPPLY AIR TEMP. SENSOR – AVERAGING |
| S/S | START/STOP |
| VFD | VARIABLE FREQUENCY DRIVE |
| ZT | ZONE TEMPERATURE SENSOR |

REFRIGERANT MONITOR SEQUENCE OF OPERATIONS RFI 562

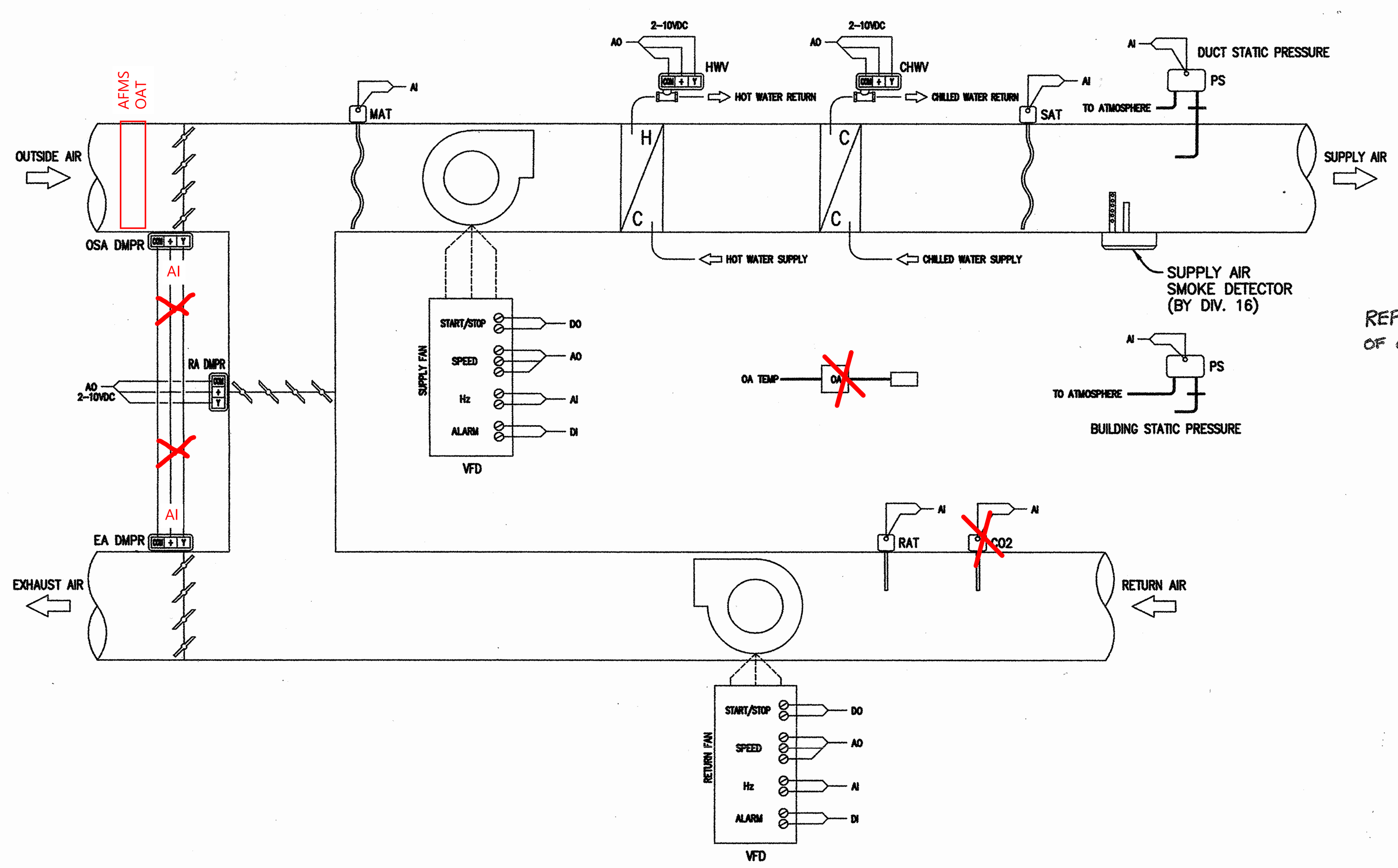


AHU UNIT CONTROL (AHU2, AHU3)

SUPPLY AND RETURN FAN CONTROL

THE FANS SHALL BE TURNED ON WHEN THE UNIT IS ENABLED TO RUN (SCHEDULED ON). IF THE UNIT IS NOT ENABLED TO RUN (SCHEDULED OFF) THE FANS SHALL BE TURNED OFF. AFTER THE FAN IS TURNED OFF, A FIVE MINUTE TIME DELAY MUST ELAPSE BEFORE THE FAN CAN BE TURNED BACK ON.

SUPPLY FAN VFD CONTROL

WHEN THE FAN IS ON THE VFD SHALL RAMP TO MAINTAIN A DUCT STATIC SET POINT OF 1.0 I.W.C (ADJUSTABLE). WHEN THE FAN IS OFF THE VFD SHALL RAMP TO 0 HZ.

RETURN FAN VFD CONTROL

WHEN THE RETURN FAN IS ON THE RETURN FAN VFD SHALL RAMP TO MAINTAIN A BUILDING STATIC SET POINT OF 0.025 I.W.C (ADJUSTABLE). WHEN THE FAN IS OFF THE VFD SHALL RAMP TO 0 HZ.

CHW VALVE CONTROL

WHEN THE SUPPLY FAN IS ON THE CHW VALVE SHALL MODULATE TO MAINTAIN ITS SUPPLY AIR SET POINT. WHEN THE SUPPLY FAN IS OFF THE CHW VALVE SHALL MOVE TO THE CLOSED POSITION.

CHW REQUEST

WHEN THE CHW VALVE IS OPEN MORE THAN 90% FOR 5 MINUTES A REQUEST FOR CHILLED WATER IS TO BE TURNED ON. WHEN THE CHW VALVE IS CLOSED FOR 15 MINUTES THE REQUEST FOR CHILLED WATER SHALL BE TURNED OFF.

SUPPLY AIR RESET SCHEDULE

THE SUPPLY AIR SET POINT SHALL BE RESET BASED ON THE HIGHEST VAV ZONE VARIANCE FROM SET POINT. (I.E. VAV ZONE TEMPERATURE − VAV ZONE SET POINT). SEE RESET SCHEDULE BELOW.

| MAX VAV ZONE TEMP DIFF | SA SET POINT |
|---|---|
| 2 | 55 |
| 1 | 62.5 |
| 0 TO −1.9 | 70 |
| −2 | 120 |

HW VALVE CONTROL

WHEN THE SUPPLY FAN IS ON AND A REQUEST FOR HEATING IS ON THE HW VALVE SHALL MODULATE TO MAINTAIN IT'S SUPPLY AIR SET POINT. WHEN THE SUPPLY FAN IS OFF THE HW VALVE SHALL MOVE TO THE CLOSED POSITION.

HEATING REQUEST

WHEN THE FAN IS ON AND THE MAX ZONE TEMP DIFF IS EQUAL TO OR BELOW MINUS THREE (−3) DEGREES, THE HEATING REQUEST SHALL BE TURNED ON.

ECONOMIZER CONTROL

WHEN THE SUPPLY FAN IS ON AND THE OUTSIDE AIR TEMPERATURE IS BELOW THE OUTSIDE AIR LOCKOUT SET POINT (ADJUSTABLE) OF 68 DEG. MINUS 2 (−2) DEGREES AND THE OUTSIDE AIR TEMPERATURE IS BELOW THE RETURN AIR TEMPERATURE MINUS 2 (−2) DEGREES THE OUTSIDE AIR DAMPERS SHALL MODULATE TO MAINTAIN A MIXED AIR SET POINT. IF THE OUTSIDE AIR TEMPERATURE RISES ABOVE THE OUTSIDE AIR LOCKOUT SET POINT OR THE OUTSIDE AIR RISES ABOVE THE RETURN AIR THE DAMPERS SHALL MODULATE TO THEIR MINIMUM POSITION TO MAINTAIN ITS CO2 LEVEL SET POINT OF 700PPM. THE DAMPERS SHALL CLOSE WHEN THE FAN IS TURNED OFF.

MIXED AIR SET POINT SCHEDULE

| MAX VAV ZONE TEMP DIFF | MA SET POINT |
|---|---|
| 0 | 70 |
| 0.5 | 62.5 |
| 1 | 55 |

MAX VAV ZONE TEMP DIFF = (VAV ZONE TEMPERATURE − VAV ZONE SET POINT)

ALARMS

* IF THE SUPPLY FAN IS ON AND A VFD FAULT IS DETECTED A SUPPLY FAN VFD FAILURE ALARM SHALL BE GENERATED.
* IF THE RETURN FAN IS ON AND A VFD FAULT IS DETECTED A RETURN FAN VFD FAILURE ALARM SHALL BE GENERATED.
* IF THE SUPPLY FAN IS ON AND THE DUCT STATIC IS NOT BETWEEN +/− 0.2 IWC OF IT'S SET POINT FOR 10 MINUTES A DUCT STATIC ALARM SHALL BE GENERATED.
* IF THE RETURN FAN IS ON AND THE BUILDING STATIC IS NOT BETWEEN +/− 0.1 IWC OF ITS SET POINT FOR 10 MINUTES A BUILDING STATIC ALARM SHALL BE GENERATED.
* IF THE SUPPLY FAN IS ON AND THE CO2 LEVEL ARE GREATER THAN 1000PPM FOR 5 MINUTES A HIGH CO2 LEVEL ALARM SHALL BE GENERATED. WHEN THE CO2 LEVEL GOES BELOW 800PPM THE ALARM SHALL CLEAR.

CONTROL DIAGRAM AHU2, AHU3

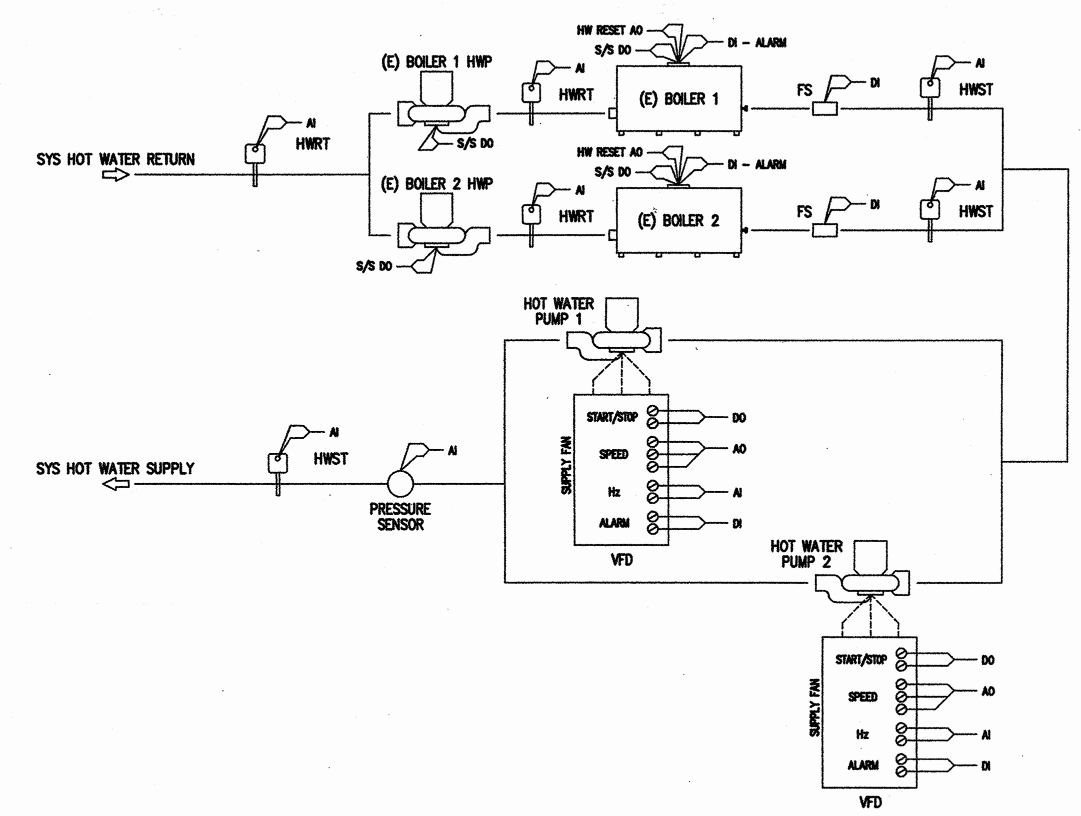


BOILER CONTROL

BOILER LEAD LAG CONTROL

IF A FAILURE IS DETECTED ON THE LEAD BOILER THE LAG BOILER SHALL BECOME LEAD. THE BOILERS SHALL CHANGE BETWEEN LEAD AND LAG ONCE A WEEK IF THERE ARE NO FAILURES ON THE LAG BOILER.

HOT WATER REQUEST

WHEN A BUILDING FAN IS ON AND THE OUTSIDE AIR TEMPERATURE IS BELOW BOILER LOCKOUT SET POINT OF 65 DEGREES (ADJUSTABLE) THE HOT WATER REQUEST SHALL BE TURNED ON. IF THE BUILDING FANS ARE OFF OR THE OUTSIDE AIR TEMPERATURE RISES ABOVE THE BOILER LOCKOUT PLUS TWO (+2) DEGREES THE HOT WATER REQUEST SHALL TURN.

HOT WATER PUMP CONTROL

THE LEAD HOT WATER PUMP SHALL BE TURNED ON IF THE HOT WATER REQUEST ON. THE HOT WATER PUMP SHALL BE TURNED OFF WHEN THE BOILER REQUEST IS OFF AND A FIVE MINUTE TIME DELAY HAS ELAPSED.

BOILER CONTROL

THE LEAD BOILER SHALL BE TURNED ON IF THE BOILER REQUEST IN ON AND THERE IS PROOF OF HOT WATER FLOW. THE BOILER SHALL BE TURNED OFF WHEN THE BOILER REQUEST OF OFF OR THERE IS NO PROOF OF HOT WATER FLOW.

BOILER RESET

WHEN THE BOILER IS ON THE AND HOT WATER SUPPLY TEMPERATURE IS BELOW ITS HOT WATER SUPPLY SET POINT THE BOILER RESET SHALL BE TURNED ON. IF THE BOILER IS OFF OR THE HOT WATER SUPPLY TEMPERATURE IS ABOVE ITS HOT WATER SET POINT PLUS FIVE (+5) DEGREES THE BOILER RESET SHALL BE TURNED OFF.

HOT WATER SUPPLY TEMPERATURE RESET SCHEDULE

THE HOT WATER SUPPLY TEMPERATURE SET POINT SHALL BE RESET OFF THE OUTSIDE AIR TEMPERATURE. SEE RESET SCHEDULE BELOW. (ALL CALCULATIONS ARE LINEAR)

| OSA TEMP | HWS SET POINT |
|---|---|
| 70 | 90 |
| 60 | 120 |
| 50 | 150 |

HW SYSTEM PUMP CONTROL

HOT WATER SYSTEM LEAD LAG CONTROL

IF A FAILURE IS DETECTED ON THE LEAD PUMP AND THE LAG PUMP HAS NO FAILURES THE LAG PUMP SHALL BECOME LEAD. THE PUMPS SHALL CHANGE BETWEEN LEAD AND LAG ONCE A WEEK IF THERE ARE NO PUMP FAILURES ON THE LAG PUMP.

HOT WATER SYSTEM PUMP CONTROL

WHEN THE HOT WATER REQUEST IS ON, THE LEAD SYSTEM PUMP SHALL BE TURNED ON. WHEN THE HOT WATER REQUEST IS OFF THEN THE LEAD PUMP SHALL TURN OFF AFTER A FIVE MINUTE TIME DELAY.

HOT WATER SYSTEM VFD PUMP CONTROL

WHEN THE LEAD PUMP IS ON, THE VFD SHALL RAMP TO MAINTAIN ITS DIFFERENTIAL SET POINT OF (    ) PSI. WHEN THE LEAD PUMP IS OFF THE VFD SHALL RAMP TO 0 HZ.

DOMESTIC HW PUMP CONTROL

HOT WATER PUMP CONTROL

WHEN THE BUILDING IS OCCUPIED THE DOMESTIC HOT WATER PUMP SHALL BE TURNED ON. WHEN THE BUILDING IS NOT OCCUPIED THE DOMESTIC HOT WATER PUMP SHALL BE TURNED OFF.

BOILER CONTROL DIAGRAM

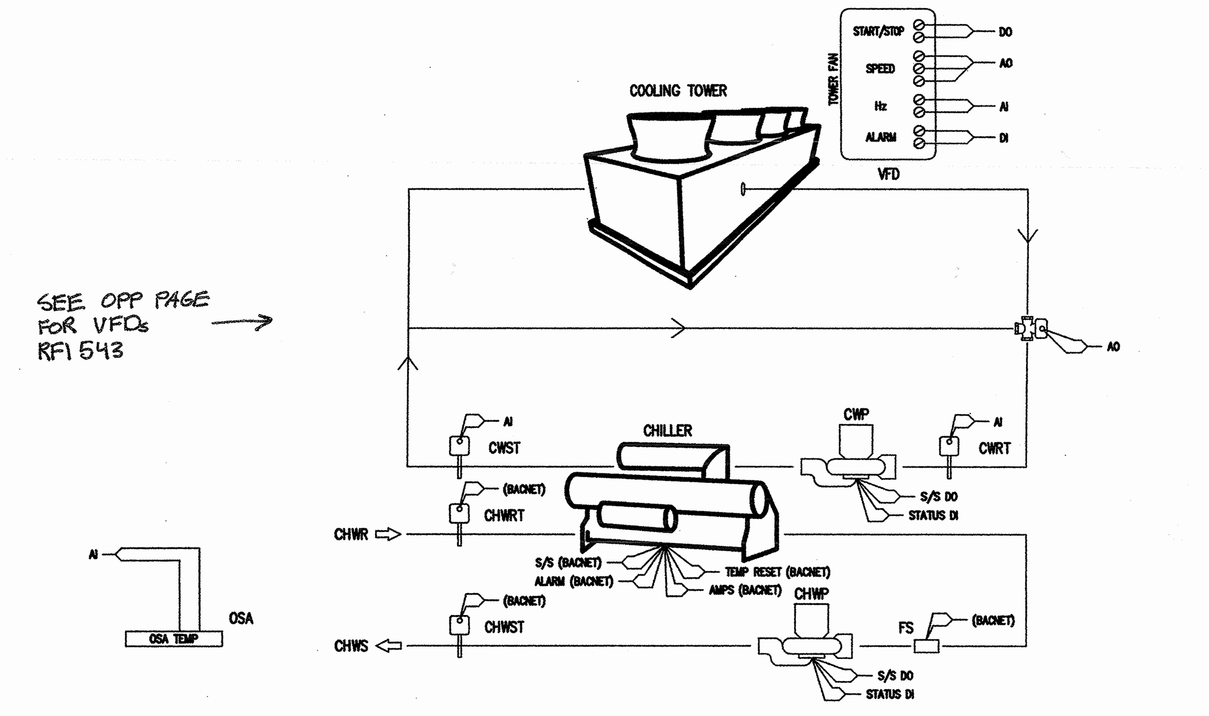


CHILLER CONTROL

CHILLER WATER PUMP CONTROL

WHEN A REQUEST FOR THE CHILLER IS ON THE CHILLED WATER PUMP SHALL BE TURNED ON. WHEN THE REQUEST FOR THE CHILLER IS OFF THE CHILLED WATER PUMP SHALL BE TURNED OFF AFTER A 5 MINUTES TIME DELAY.

CHILLER CONTROL (BACNET INTERFACE)

WHEN A REQUEST FOR THE CHILLER IS ON AND THE CHILLED WATER PUMP STATUS IS ON AND THE CONDENSER WATER PUMP STATUS IS ON THEN CHILLER SHALL BE TURNED ON. WHEN THE REQUEST FOR THE CHILLER IS OFF OR THE CHILLED WATER PUMP STATUS IS OFF OR THE CONDENSER WATER PUMP STATUS IS OFF THE CHILLER SHALL BE TURNED OFF.

CHILLED WATER RESET CONTROL (BACNET INTERFACE)

WHEN A REQUEST FOR THE CHILLER IS ON THE CHILLED WATER SUPPLY TEMPERATURE SHALL BE RESET BASED ON THE CHILLERS RETURN WATER TEMPERATURE. (SEE SCHEDULE BELOW)

| CHW RETURN TEMP | CHW SUPPLY SET POINT |
|---|---|
| 54 | 44 |
| 49 | 49 |
| 44 | 54 |

COOLING TOWER CONTROL

COOLING TOWER CONDENSER WATER PUMP CONTROL

WHEN A REQUEST FOR THE CHILLER IS ON THE CONDENSER WATER PUMP SHALL BE TURNED ON. WHEN THE REQUEST FOR THE CHILLER IS OFF THE CONDENSER WATER PUMP SHALL BE TURNED OFF AFTER A 5 MINUTES TIME DELAY.

COOLING TOWER FAN VFD CONTROL

WHEN THE CONDENSER WATER PUMP IS ON THE COOLING TOWER VFD SHALL RAMP TO MAINTAIN THE CONDENSER WATER SET POINT OF 78 DEG. (CHECK W/CHILLER MANUFACTURE FOR DESIGN SET POINT). WHEN THE CONDENSER PUMP IS OFF THE VFD SHALL RAMP TO 0 HZ.

COOLING TOWER VALVE CONTROL

WHEN THE CONDENSER WATER PUMP IS ON THE CONDENSER VALVE SHALL MODULATE TO MAINTAIN THE CONDENSER WATER SET POINT MINUS 2 DEGREES. WHEN THE CONDENSER PUMP IS OFF THE VALVE SHALL MOVE TO THE OPEN POSITION (FULL FLOW TO TOWER).

CHILLER CONTROL DIAGRAM

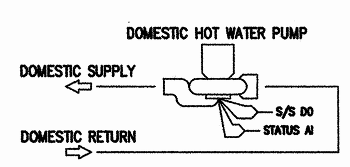


DOMESTIC HW PUMP CONTROL

HOT WATER PUMP CONTROL

WHEN THE BUILDING IS OCCUPIED THE DOMESTIC HOT WATER PUMP SHALL BE TURNED ON. WHEN THE BUILDING IS NOT OCCUPIED THE DOMESTIC HOT WATER PUMP SHALL BE TURNED OFF.

DOMESTIC HOT WATER CONTROL DIAGRAM

tBP
architecture
planning
interiors
management
tBP/Architecture
1000 Burnett Avenue, Suite 140
Concord, CA 94520
p: 925.246.6419 f: 925.246.6495
architect

AINSWORTH ASSOCIATES
MECHANICAL ENGINEERS
SACRAMENTO, CA
JOB 2003-003
consultant

IDENTIFICATION STAMP
DIV. OF THE STATE ARCHITECT
OFFICE OF REGULATION SERVICES
name
address
city, state, zip
ph: fx:
agency

SCIENCE BUILDING
LOS MEDANOS COLLEGE
Contra Costa Community College District
owner

tBP project number : 20247.00
file name:
drawn by: checked by:
date: NOVEMBER 15, 2004
Rev. date: description:

drawing title:
MECHANICAL-CONTROL DIAGRAMS

LMC SCIENCE 313-023-112.01-0-00.00
drawing no.:
M5.1
drawing of ?

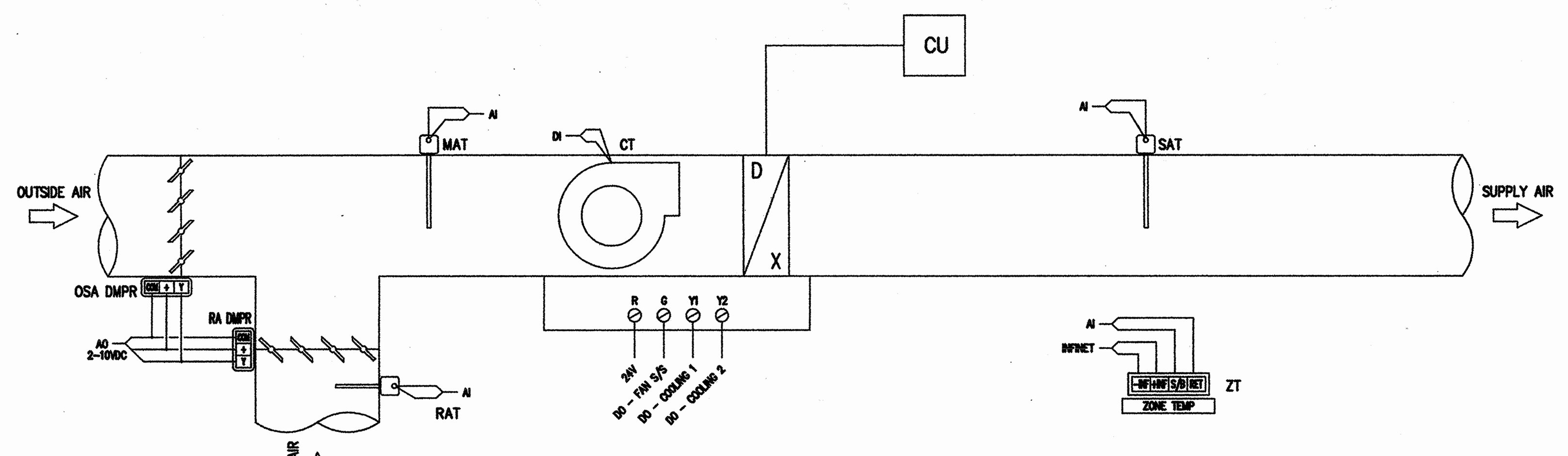


AC SPLIT-SYSTEM UNIT CONTROL

FAN CONTROL

THE FAN SHALL BE TURNED ON WHEN THE UNIT SCHEDULED IS ON. IF THE UNIT SCHEDULE IS OFF THE FAN SHALL BE TURNED OFF. AFTER THE FAN IS TURNED OFF, A FIVE MINUTE TIME DELAY MUST ELAPSE BEFORE THE FANS CAN BE TURNED BACK ON.

COOLING CONTROL

WHEN THE FAN IS ON AND THE FAN HAS PROOF OF AIRFLOW AND THE ZONE TEMPERATURE IS ABOVE IT'S SET POINT PLUS TWO (+2) DEGREES AND THE SUPPLY AIR TEMPERATURE IS ABOVE 62 DEGREES THEN THE FIRST STAGE OF COOLING SHALL BE TURNED ON. IF THE SUPPLY AIR TEMPERATURE IS ABOVE 62 DEGREES FOR FIVE MINUTES THE SECOND STAGE OF COOLING SHALL BE TURNED ON. IF THE ZONE TEMPERATURE FALLS BELOW ITS SET POINT OR THE FAN STATUS IS OFF OR THE FAN IS OFF THEN THE COOLING SHALL BE TURNED OFF. IF THE SUPPLY AIR TEMPERATURE SHOULD FALL BELOW THE LOW LIMIT LOCKOUT SET POINT OF 44 DEGREES ONE STAGE OFF COOLING SHALL BE TURNED OFF FOR A FIVE MINUTE TIME DELAY.

ECONOMIZER CONTROL

WHEN THE FAN IS ON AND THE OUTSIDE AIR TEMPERATURE IS BELOW THE OUTSIDE AIR LOCKOUT SET POINT (ADJUSTABLE) OF 68 DEGREES MINUS 2 (-2) DEGREES AND THE OUTSIDE AIR TEMPERATURE IS BELOW THE RETURN AIR TEMPERATURE MINUS 2 (-2) DEGREES THE OUTSIDE AIR DAMPERS SHALL MODULATE TO MAINTAIN A MIXED AIR SET POINT. IF THE OUTSIDE AIR TEMPERATURE RISES ABOVE THE OUTSIDE AIR LOCKOUT SET POINT OR THE OUTSIDE AIR RISES ABOVE THE RETURN AIR SET POINT OR THE HEATING IS ON THE DAMPERS SHALL MODULATE TO THEIR MINIMUM POSITION OF 20% (ADJUSTABLE). THE DAMPERS SHALL CLOSE WHEN THE FAN IS TURNED OFF.

MIXED AIR SET POINT SCHEDULE

| MAX ZONE DIFF | MA SET POINT |
|---|---|
| 0 | 70 |
| 0.5 | 62.5 |
| 1 | 55 |

ZONE DIFF = (VAV ZONE SPACE TEMP - VAV ZONE SPACE SET POINT)

ALARM(S)

A DAILY RUNTIME ALARMS IS BEING CALCULATED FOR THIS UNIT. ONCE THE RUNTIME ALARM EXCEEDS A 24 HR. LIMIT (ADJUSTABLE) AND ALARM IS LOGGED AND SENT TO THE ALARM VIEW WINDOW. ONCE THE UNIT IS SHUT DOWN THE DAILY RUNTIME WILL RESET TO ZERO.
IF BOTH STAGES OF COOLING ARE ON AND THE SUPPLY AIR TEMPERATURE IS ABOVE 60 DEG. FOR MORE THAN 15 MINUTES A COOLING ALARM SHALL BE GENERATED.
IF THE ZONE IS OCCUPIED AND THE ZONE TEMPERATURE IS +/- 5 DEGREES FROM SET POINT FOR 15 MINUTES AN OUT OF RANGE TEMPERATURE ALARM SHALL BE ACTIVE.

AC SPLIT SYSTEM
ACI-1, ACI-2, ACI-3, ACI-4, ACS-1, ACS-2

Add ACI-4 to AC Split System control diagram title.
ADDENDUM No. 1

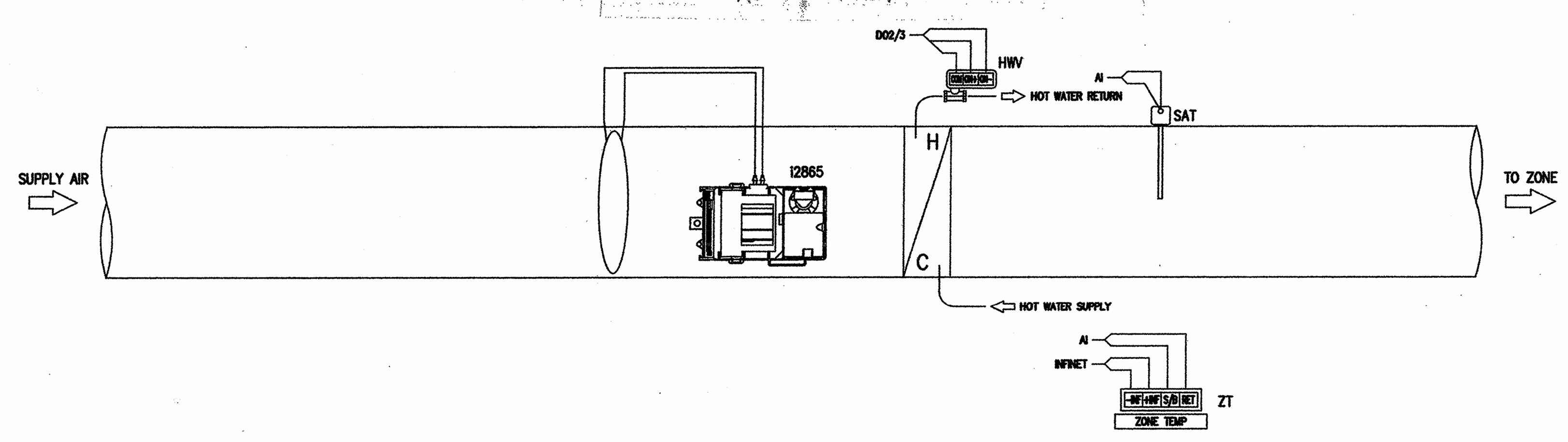


VAV ZONE W/REHEAT

VAV DAMPER CONTROL

THE VAV DAMPER SHALL MODULATE TO MAINTAIN ITS CFM SET POINT WHEN THE FLOOR IS SCHEDULED ON OR ITS OVERRIDE IS ACTIVE. THE DAMPER SHALL CLOSE WHEN SCHEDULE AND THE OVERRIDE IS INACTIVE.

CFM SET POINT CONTROL

THE CFM SET POINT SHALL BE RESET FROM ITS MINIMUM TO MAXIMUM CFM SET POINTS BY A PI CALCULATION TO MAINTAIN ITS ZONE TEMPERATURE COOLING SET POINT OF 74 DEG. (ADJUSTABLE).
NOTE: THE COOLING SET POINT SHALL ALWAYS BE AT LEAST 4 DEGREES HIGHER THAN THE HEATING SET POINT.

HOT WATER VALVE CONTROL

WHEN THE SPACE TEMPERATURE IS BELOW ITS SPACE SET POINT THE HOT WATER VALVE SHALL MODULATE TO MAINTAIN ITS SUPPLY AIR SET POINT. SEE BELOW SCHEDULE.

HOT WATER VALVE SUPPLY AIR SET POINT

THE SUPPLY AIR SET POINT SHALL BE RESET BASED ON THE ZONE TEMPERATURE VARIANCE FROM THE ZONE TEMPERATURE HEATING SET POINT OF 70 DEG. (ADJUSTABLE). SEE RESET SCHEDULE BELOW. (ZONE DIFF = ZONE TEMPERATURE - ZONE SET POINT)

ALARM(S)

IF THE ZONE IS OCCUPIED AND THE ZONE TEMPERATURE IS +/- 5 DEGREES FROM SET POINT FOR 15 MINUTES AN OUT OF RANGE TEMPERATURE ALARM SHALL BE ACTIVE.

REHEAT COIL

HOT WATER VALVE CONTROL

WHEN UNIT IS SCHEDULED TO RUN OR AN OVERRIDE IS ACTIVE AND SPACE TEMPERATURE IS BELOW ITS SPACE SET POINT THE HOT WATER VALVE SHALL MODULATE TO MAINTAIN ITS SUPPLY AIR SET POINT. SEE BELOW SCHEDULE. WHEN THE UNIT IS SCHEDULED OFF AND NO OVERRIDE IS ACTIVE THE HOT WATER VALVE SHALL MOVE TO THE CLOSED POSITION

HOT WATER VALVE SUPPLY AIR SET POINT

THE SUPPLY AIR SET POINT SHALL BE RESET BASED ON THE ZONE TEMPERATURE VARIANCE FROM THE ZONE TEMPERATURE SET POINT (ADJUSTABLE). SEE RESET SCHEDULE BELOW. (ZONE DIFF = ZONE TEMPERATURE - ZONE SET POINT)

| ZONE TEMP DIFF | SA SET POINT |
|---|---|
| 0 | 70 |
| -1 | 90 |
| -2 | 110 |

ALARM(S)

IF THE ZONE IS OCCUPIED AND THE ZONE TEMPERATURE IS +/- 5 DEGREES FROM SET POINT FOR 15 MINUTES AN OUT OF RANGE TEMPERATURE ALARM SHALL BE ACTIVE.

VAV WITH HOT WATER REHEAT VALVE

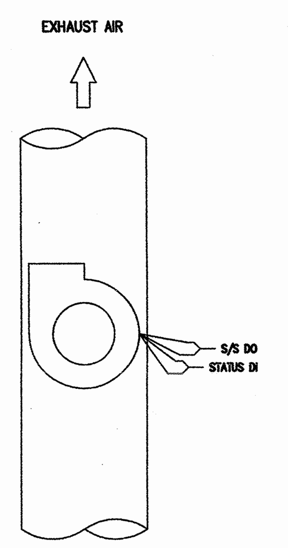


EXHAUST FAN CONTROL

EXHAUST FAN CONTROL

WHEN THE BUILDING IS OCCUPIED THE EXHAUST FANS SHALL BE TURNED ON. WHEN THE BUILDING IS UNOCCUPIED THE FAN SHALL BE TURNED OFF.

EXHAUST FAN CONTROL DIAGRAM

LABORATORY SYSTEM ZONE CONTROL (BACNET INTERFACE)

ZONE COOLING CONTROL (BACNET INTERFACE)

WHEN THE SPACE TEMPERATURE IS ABOVE ITS SPACE SET POINT THE COOLING SIGNAL SHALL RAMP TO MAINTAIN ITS ZONE SET POINT OF 72 DEG. (ADJUSTABLE).

ZONE HOT WATER VALVE CONTROL(BACNET INTERFACE)

WHEN THE SPACE TEMPERATURE IS BELOW ITS SPACE SET POINT THE HOT WATER VALVE SHALL MODULATE TO MAINTAIN ITS SUPPLY AIR SET POINT. SEE BELOW SCHEDULE.

ZONE HOT WATER VALVE SUPPLY AIR SET POINT (BACNET INTERFACE)

THE SUPPLY AIR SET POINT SHALL BE RESET BASED ON THE ZONE TEMPERATURE VARIANCE FROM THE ZONE TEMPERATURE SET POINT (ADJUSTABLE). SEE RESET SCHEDULE BELOW. (ZONE DIFF = ZONE TEMPERATURE - ZONE SET POINT)

| ZONE TEMP DIFF | SA SET POINT |
|---|---|
| 0 | 70 |
| -1 | 90 |
| -2 | 110 |

ZONE ALARM(S) (BACNET INTERFACE)

IF THE ZONE GOES INTO ALARM A GENERAL FAILURE ALARM SHALL BECOME ACTIVE.

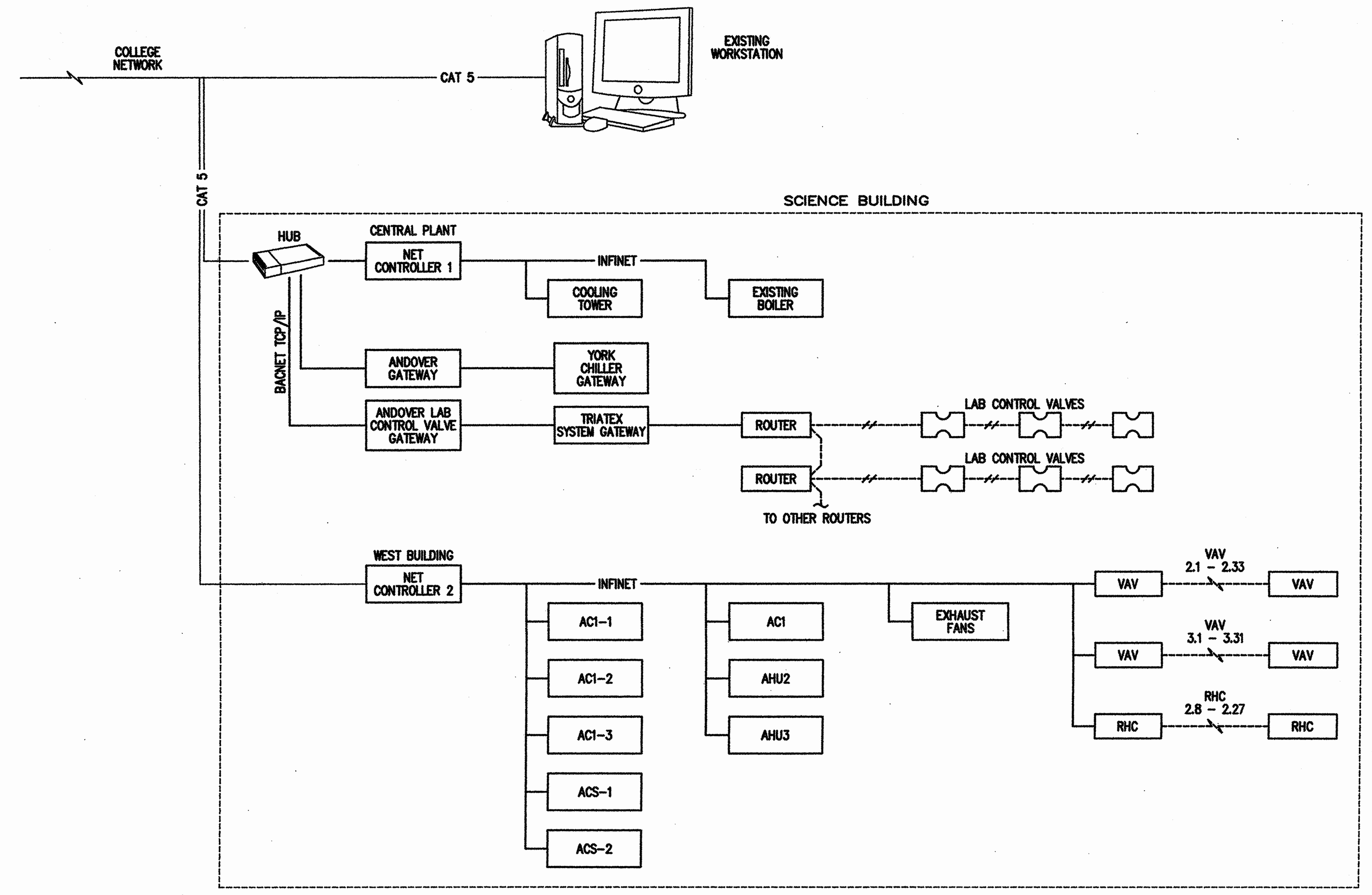


CONTROL RISER DIAGRAM

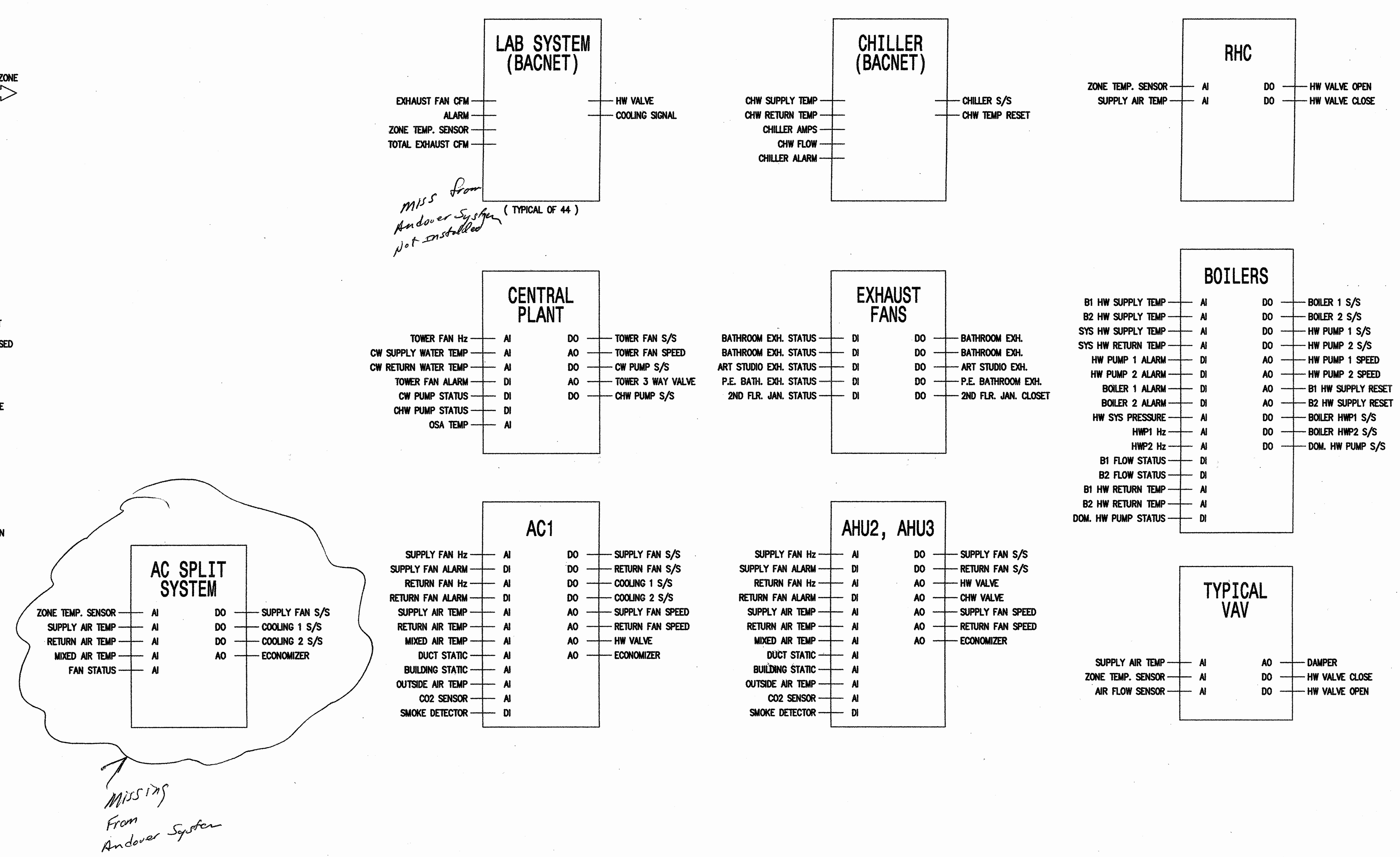


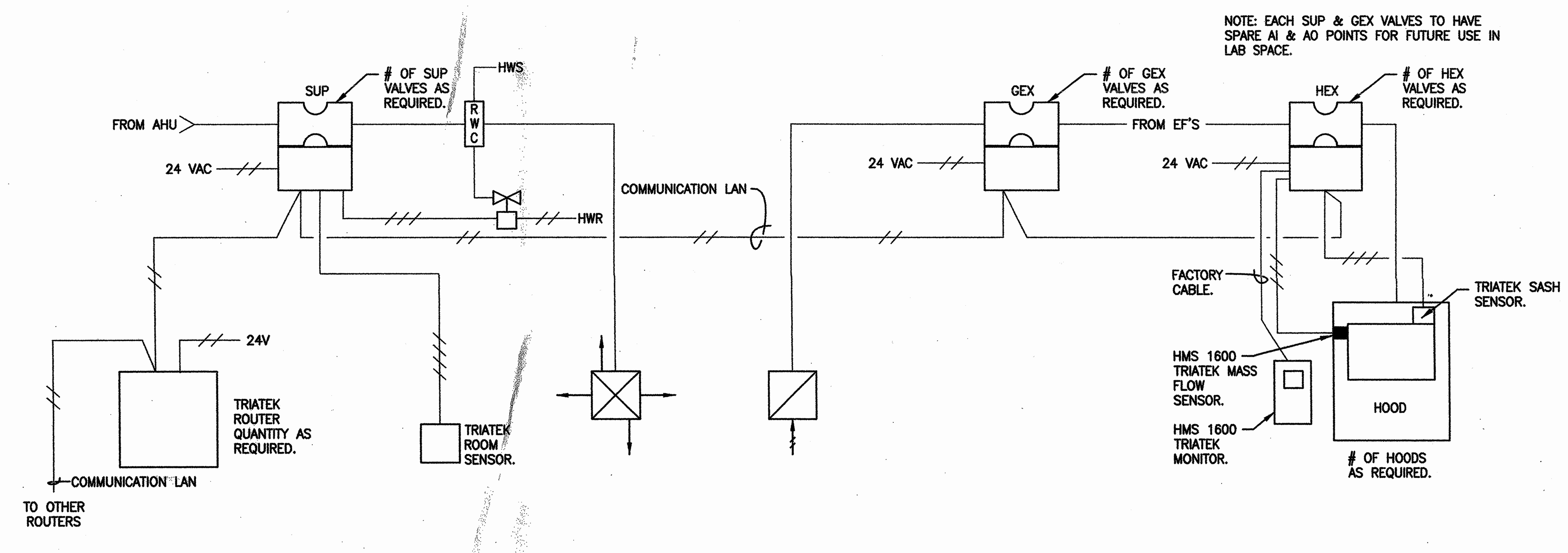


NOTE: ALL LAB COMPONENTS AND POWER SUPPIES SHALL BE UL OR ETL LISTED.

LAB CONTROL WIRING DETAIL

architecture planning interiors management

tBP/Architecture
1000 Burnett Avenue, Suite 140
Concord, CA 94520
p: 925.246.6419 f: 925.246.6495

architect

AINSWORTH ASSOCIATES
MECHANICAL ENGINEERS
SACRAMENTO, CA

consultant

name
address
city, state, zip
ph: fx:

agency

SCIENCE BUILDING
LOS MEDANOS COLLEGE
Contra Costa Community College District

owner

tBP project number : 20241.00

file name:

drawn by: checked by:

date: NOVEMBER 15, 2004

Rev. date: description:

drawing title:
MECHANICAL-
CONTROL DIAGRAMS

LMC SCIENCE 313-023-112.01-0-00.00
drawing no.:
M5.2
drawing of ?

**S. J. AMOROSO**
Request For Information/Clarification

**DSA FILE NO. 7-C1**
**DSA APPL. No. 01-106226**

To: IBP/Architecture, 1000 Burnett Ave, Suite 140, Concord, CA 94520
Attn: Celia Chiang, Tom Beckett
Fax: 925-246-6495
Subj.: VAV Box Support Detail
Reference (dwg, spec.): M6.1 Details 3, 12

Project: LOS MEDANOS COLLEGE SCIENCE BUILDING, Contra Costa Community College District
IBP pth: 20247.00
RFI No: 233
Subcontractor RFI: Monterey 8

Reply Requested By: 6/2/06

INFORMATION REQUESTED: Date: 5/26/06

Please note the attached Monterey Mechanical RFI No. 8 regarding the VAV box support details 3 and 12 on M6.1. Please advise.

SUGGESTED SOLUTION:
Cost Impact: ☐ Schedule Impact: ☐ days By: Mark Delgado

RESPONSE: DATE: 5.31.06
AAMS response: Proposed support details appear acceptable to AAMS.
Recommend accepting proposed attachment details as one cost or schedule
DASSE Response: Use of detail no. 9 with mark-ups is structurally acceptable.
Use of Tolco concrete inserts is structurally acceptable.

Attachments:
By: AAMS / DASSE

TRANSMITTAL RECORD:

| FROM | TO | DATE |
|---|---|---|
| S.J. AMOROSO | IBP / ARCHITECTURE | 5/26/06 |
| IBP / ARCHITECTURE | ENGINEER/CONSULTANT | 5.31.06 |
| ENGINEER/CONSULTANT | IBP / ARCHITECTURE | 5.31.06 |
| IBP / ARCHITECTURE | S.J. AMOROSO | 5.31.06 |
| S.J. AMOROSO | ORIGINATOR | 5.31.06 |

RFI # 000
Page 1

---

**MONTEREY MECHANICAL**
ENGINEERING CONSULTATION
3660 Willow Ave, Antioch, CA 94509 ● Phone: (925) 757-4848 ● Fax: (925) 757-6574

## REQUEST FOR INFORMATION

**PROJECT: Los Medanos College Science Building**

**MMC RFI #: 008**

**SUBJECT: VAV Box Support Detail**

**DATE REQUESTED: 6/1/06**

### QUESTION

| FROM: Steve Harris-MMC | TO: Mark G. Delgado-SJA | DATE: 6/26/06 |
|---|---|---|

**Reference Drawing: M6.1, Detail 12, Detail 3**
**Reference Specification: Div 16**

1. Detail 12 calls for supports consisting of hanger rods and channel strut for all VAV boxes. To help with access to the controls and actuators mounted to the side of the VAV's we propose using the attached detail marked No.9, that uses straps for boxes under 50lbs.(web). The straps can be hung as not to block access of controls. All boxes over 50lbs. would be supported by Detail 12 as shown on Contract drawing M6.1.
2. Detail 3 shows several options for upper rod inserts for pipe. We would like to use a pre fabricated concrete deck insert Tolco Fig. 109A with 3/8"rod for all VAV boxes over 50 lbs. This insert has been previously approved for use as a pipe insert on this project. See attached sheet.

Please Advise

### RESPONSE

| FROM: | TO: | DATE: |
|---|---|---|

DASSE Response
1. Use of detail No 9 with mark-ups is structurally acceptable.
2. Use of Tolco concrete insert is structurally acceptable. 5-31-06

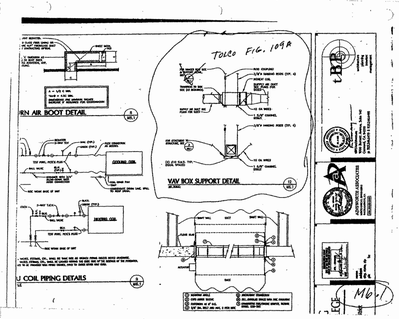


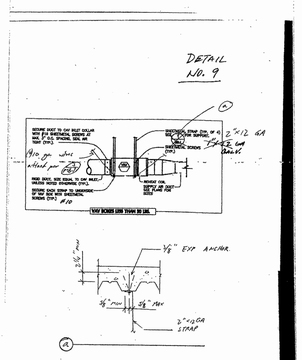


---

**S. J. AMOROSO**
Request For Information/Clarification

**DSA FILE NO. 7-C1**
**DSA APPL. No. 01-106226**

To: IBP/Architecture, 1000 Burnett Ave, Suite 140, Concord, CA 94520
Attn: Celia Chiang, Tom Beckett
Fax: 925-246-6495
Subj.: Lab exhaust hood connections
Reference (dwg, spec.): 14/M6.1, spec 15890-1.02C

Project: LOS MEDANOS COLLEGE SCIENCE BUILDING, Contra Costa Community College District
IBP pth: 20247.00
RFI No: 261
Subcontractor RFI: Monterey 10

Reply Requested By: 6/28/06

INFORMATION REQUESTED: Date: 6/22/06

See attached Monterey RFI No. 10 discussing a proposed connection detail for the lab exhaust hoods. Please review and advise if this is acceptable.

SUGGESTED SOLUTION:
Cost Impact: ☐ Schedule Impact: ☐ days By: Bryan Newman

RESPONSE: DATE:
Monterey Mechanical alternate connection appears to acceptable. Recommend for a sketch to be provided listing approximate quantities of locations of this type of connection. Additionally, recommend for a sample joint to be provided for review by owner and engineer. Sample joint should have a welded connection joint and the proposed joint for comparison. It should also be noted that "Plaslite" and "Carboline" and that updated cut sheets should be provided for the energy material.
By: Dave Weston/AAMS
6/27/06

Attachments:

TRANSMITTAL RECORD:

| FROM | TO | DATE |
|---|---|---|
| S.J. AMOROSO | IBP / ARCHITECTURE | 6/22/06 |
| IBP / ARCHITECTURE | ENGINEER/CONSULTANT | |
| ENGINEER/CONSULTANT | IBP / ARCHITECTURE | |
| IBP / ARCHITECTURE | S.J. AMOROSO | |
| S.J. AMOROSO | ORIGINATOR | |

The response from David Weston for RFI #261 (dated 6/27/06) is okay with us.
Richard W. Cwik/KPD
7/13/06

RFI # 000
Page 1

---

**MONTEREY MECHANICAL**
ENGINEERING CONSULTATION
3660 Willow Ave, Antioch, CA 94509 ● Phone: (925) 757-4848 ● Fax: (925) 757-6574

## REQUEST FOR INFORMATION

**PROJECT: Los Medanos College Science Building**

**MMC RFI #: 010**

**SUBJECT: Stainless Steel Lab Hood Exhaust Duct Transverse Joint**

**DATE REQUESTED: 6/26/06**

### QUESTION

| FROM: Steve Harris-MMC | TO: Mark G. Delgado-SJA | DATE: 6/21 /06 |
|---|---|---|

**Reference Drawing: M6.1, Detail 14**
**Reference Specification: 15890, 1.02, C**

1. Detail 14, drawing M6.1 indicates that the lab hood exhaust duct is to be constructed using 18 gage stainless steel with welded joints. We will need to provide a flanged joint, at a minimum, where the duct attaches to a lab air valve, flex connection to equipment, and at the hoods. No detail has been provided in the contract documents so we propose using the attached "Hood Exhaust Duct Transverse Joint Detail Connection Detail". This is an industrial type detail that is commonly used for heavy gage ductwork. In fact, Monterey Mechanical used this exact joint detail to join the 18 gage ductwork exhausting the 140 fume hoods that was part of the U.S. Geological Survey Facility in Menlo Park. The project specified Plaslite joint adhesive for all fume duct sealing that included approximately 5000 joints. The Plaslite provides a bond almost as permanent as weld. Although, with some effort you can break the seal with a thin saw blade if equipment needs to be replaced, or duct changes are required. Plaslite was also used in a spray form to coat the interior of fume ducts, so it performs well when exposed to chemicals.

We would also propose the use of this joint detail in lieu of field welding. Field welds can be prone to deficiencies as the environment can not always be controlled, not to mention the additional issues associated with welding in place. Welding in a shop environment is conducive to the fabrication process, we would shop fabricate the ductwork and ship to the site in the largest sections practical to minimize field joints. We feel that both the Owner and Monterey Mechanical would benefit from the use of this joint, while it is not an inexpensive joint, the flanges add strength to the duct, and allow more flexibility in the installation.
See the attached documentation.

Please Advise

### RESPONSE

| FROM: | TO: | DATE: |
|---|---|---|

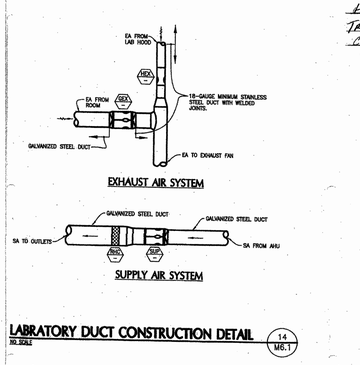


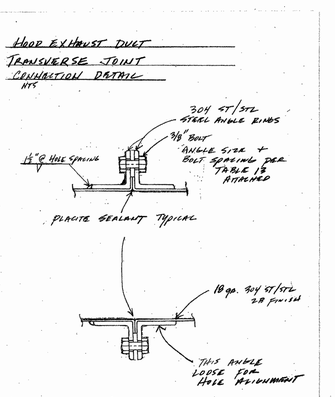


LABRATORY DUCT CONSTRUCTION DETAIL 14 M6.1
NO SCALE

---

**S. J. AMOROSO**
Request For Information/Clarification

**DSA FILE NO. 7-C1**
**DSA APPL. No. 01-106226**

To: IBP/Architecture, 1000 Burnett Ave, Suite 140, Concord, CA 94520
Attn: Celia Chiang, Tom Beckett
Fax: 925-246-6495
Subj.: Return air boot detail
Reference (dwg, spec.): B/M6.1

Project: LOS MEDANOS COLLEGE SCIENCE BUILDING, Contra Costa Community College District
IBP pth: 20247.00
RFI No: 338
Subcontractor RFI: Monterey 13A

Reply Requested By: 8/12/06

INFORMATION REQUESTED: Date: 8/5/06

See attached Monterey Mechanical proposed detail to space limitations not allowing for application of detail B/M6.1 in 19 of 38 locations. Please advise.

SUGGESTED SOLUTION:
Cost Impact: ☐ Schedule Impact: ☐ days By: Justin Warren

RESPONSE: DATE:
The proposed size changes have been reviewed and are acceptable at all locations with the following comments:

1. Linings are to be 1 1/2" thick per Construction Documents.
2. Round duct to be run as straight as possible. Kinks, short radius bends, etc. will not be acceptable.
3. Contractor can shorten RA boot length at there option based on response to RFI 331.

Dave Weston/AAMS - 8/8/06

RFI # 000
Page 1

---

**MONTEREY MECHANICAL**
ENGINEERING CONSULTATION
3660 Willow Ave, Antioch, CA 94509 ● Phone: (925) 757-4848 ● Fax: (925) 757-6574

RFI 338

Attn: Steve)
6-30-06
RFI Immediate (critical)
A Return air run can be sitting opposite total B/M6.1 detail some cases may not fit, so can we use alternate detail

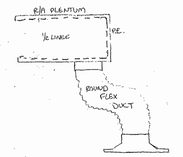


## REQUEST FOR INFORMATION

**PROJECT: Los Medanos College Science Building**

**MMC RFI #: 013a**

**SUBJECT: Return Air Boot Detail**

**DATE REQUESTED: 09-05-06**

### QUESTION

| FROM: Andy Potts/Dan R | TO: Mark G. Delgado-SJA | DATE: 09-05-06 |
|---|---|---|

**Reference Drawing: B/M6.1**
**Reference Specification:**

Due to space limitations the return air ducting as shown in detail B/M6.1 can not be installed in 19 of the 38 locations shown on the drawings. See the attached drawing and duct size schedule for the proposed changes.

4 pages

### RESPONSE

| FROM: | TO: | DATE: |
|---|---|---|

PLEASE RESPOND AS SOON AS POSSIBLE

cc: FILE

---

09/05/2006 08:01 9254277570 S J AMOROSO PAGE 01/02

Attn Dan — LMC Science R/A Dams — 1 of 2

| | Detail Size O.D. | Actual Room O.D. | Flex Size |
|---|---|---|---|
| B (1) | 21×21×66 | 18×18×66 | 16"ø |
| B (2) | 21×21×66 | OK | 16"ø |
| A (3) | 15×15×45 | OK | 14"ø |
| B (4) | 21×21×66 | 18×18×66 | 16"ø |
| B (5) | 21×21×66 | OK | 16"ø |
| B (6) | 21×21×66 | OK | 16"ø |
| B (7) | 21×21×66 | OK | 16"ø |
| A (8) | 15×15×45 #103 | OK | 14"ø |
| B (9) | 21×21×66 Duct Size | 18×18×50 | 16"ø |
| B (10) | 21×21×66 #104 | 18×18×66 | 16"ø |
| A (11) | 15×15×45 #112 | OK | 14"ø |
| A (12) | 15×15×45 #113 | OK | 14"ø |
| A (13) | 15×15×45 #114 | OK | 14"ø |
| A (14) | 15×15×45 #115 | OK | 14"ø |
| C (15) | 25×25×80 #109 | 36×10×60 | 18"ø |
| B (16) | 21×21×66 #152 | OK | 16"ø |
| B (17) | 21×21×66 | OK | 16"ø |
| A (18) | 15×15×45 #116 | OK | 14"ø |
| A (19) | 15×15×45 #117 | OK | 14"ø |
| A (20) | 15×15×45 #118 | OK | 14"ø |
| A (21) | 15×15×45 #119 | OK | 14"ø |
| A (22) | 15×15×45 #120 | OK | 14"ø |
| A (23) | 15×15×45 #131 | OK | 14"ø |
| B (24) | 21×21×66 #122 | 18×18×66 | 16"ø |
| C (25) | 25×25×80 #110 | 36×10×60 | 18"ø |
| C (26) | 25×25×80 #130 | 20×20×80 | 18"ø |
| C (27) | 25×25×80 | 20×20×80 | 18"ø |
| C (28) | 25×25×80 #131 | 20×20×72 | 18"ø |

PAGE 02/01

09/05/2006 08:01 9254277570 S J AMOROSO PAGE 02/02

2 of 2

| | Detail Size O.D. | Actual Room O.D. | Flex Size |
|---|---|---|---|
| C (29) | 25×25×80 #131 | 20×20×72 | 18"ø |
| C (30) | 25×25×80 | " | " |
| C (31) | " #142 | 18×18×80 | " |
| C (32) | " | 15×18×80 | " |
| C (33) | " #141 | OK | " |
| C (34) | " | OK | " |
| C (35) | " #131 | 24×24×48 | " |
| C (36) | " #130 | 20×20×80 | " |
| A (37) | 15×15×45 #111 | 14×14×45 | 14"ø |
| A (38) | 15×15×45 #149 | OK | 14"ø |

PAGE 03/01

---

TABLE 13

FLANGE (TYPE F-1) — STEEL

| Inside Diameter | Minimum Ht | Minimum Ht | No. of notches | Size of Holes | Size of Bolts |
|---|---|---|---|---|---|
| 4-1/2 | 1 | 1/8 | 3/8 | 8 | 3/8 |
| 6-1/2 | 1 | 1/8 | 3/8 | 8 | 3/8 |
| 8-1/2 | 1 | 1/8 | 3/8 | 8 | 3/8 |
| 10-1/2 | 1-1/8 | 1/8 | 3/4 | 8 | 7/16 |
| 12-1/2 | 1-1/8 | 1/8 | 3/4 | 8 | 7/16 |
| 14-1/2 | 1-1/8 | 1/8 | 3/4 | 8 | 7/16 |
| 16-1/2 | 1-1/8 | 1/8 | 3/4 | 8 | 7/16 |
| 18-1/2 | 1-1/8 | 1/8 | 3/4 | 10 | 7/16 |
| 20-1/2 | 1-1/8 | 1/8 | 3/4 | 10 | 7/16 |
| 22-1/2 | 1-1/8 | 1/8 | 3/4 | 12 | 7/16 |
| 24-1/2 | 1-1/2 | 3/16 | 7/8 | 12 | 7/16 |
| 28-1/2 | 1-1/2 | 3/16 | 7/8 | 14 | 7/16 |
| 30-1/2 | 1-1/2 | 3/16 | 7/8 | 16 | 7/16 |
| 32-1/2 | 1-1/2 | 3/16 | 7/8 | 16 | 7/16 |
| 34-1/2 | 1-1/2 | 3/16 | 7/8 | 18 | 7/16 |
| 36-1/2 | 1-1/2 | 3/16 | 7/8 | 18 | 7/16 |
| 38-1/2 | 2 | 3/16 | 1-1/8 | 20 | 7/16 |
| 40-1/2 | 2 | 3/16 | 1-1/8 | 20 | 7/16 |
| 42-1/2 | 2 | 3/16 | 1-1/8 | 22 | 7/16 |
| 44-1/2 | 2 | 3/16 | 1-1/8 | 22 | 7/16 |
| 46-1/2 | 2 | 3/16 | 1-1/8 | 24 | 7/16 |
| 48-1/2 | 2 | 3/16 | 1-1/8 | 24 | 7/16 |
| 50-1/2 | 2-1/2 | 3/16 | 1-3/8 | 26 | 7/16 |
| 52-1/2 | 2-1/2 | 3/16 | 1-3/8 | 28 | 7/16 |
| 54-1/2 | 2-1/2 | 3/16 | 1-3/8 | 28 | 7/16 |
| 56-1/2 | 2-1/2 | 3/16 | 1-3/8 | 28 | 7/16 |
| 58-1/2 | 2-1/2 | 3/16 | 1-3/8 | 30 | 7/16 |
| 60-1/2 | 2-1/2 | 3/16 | 1-3/8 | 30 | 7/16 |

NOTE: Dimensions shown apply for plate flanges and angle flanges. Common size bolts 4-36".

SMACNA
Copyright © 1977 All rights reserved. This material may not be reproduced in any form

5-6

---



**WISCONSIN PROTECTIVE COATINGS CORP.**
MANUFACTURERS
HI-RESISTANT PROTECTIVE COATINGS
PO. BOX 6147
GREEN BAY, WISCONSIN 54306-6147
PHONE: (800) CORE 414 - (920)661
ORDER ENTRY FAX: 414 - 437-8245 LAB AND MANUFACTURING FAX: 414 - 437-8245

PLASITE

TECHNICAL BULLETIN
7122SJAS
FEBRUARY 1993
(Replaces December 1991)

**PLASITE 7122JAS JOINT ADHESIVE SEALANT**

TYPE: High solids modified epoxy sealer cured with an alkaline curing agent.

INTENDED USE: As a sealer and adhesive for seams and interlocks for interior and exterior of fume hood exhaust ducts.

FOR INDUSTRIAL USE ONLY!

CHEMICAL RESISTANCE: Excellent chemical resistance to a wide range of acids, alkalies, solvents and water solutions.
SURFACE PREPARATION: Steel surfaces may be prepared by blasting as required by ZONE OF USAGE. Refer to PLASITE Technical Bulletin 722C.
APPLICATION PROCEDURE: Stiff bristle brush; caulking gun; spatula technique.
POT LIFE: 8 hours at 70°F.
CURING TIME: Tack free in 1 to 2 hours at 70°F.
CURING TIME: 1 to 7 days at 70 to 90°F.
SOLIDS: 80% +4% by weight; 78% ±4% by volume.
WEIGHT: 11.5 lbs. per gallon; 13.5 lbs. per gallon.
VOC: 0.0 grams per liter.
ADDITIONAL INFORMATION: For additional application information refer to fume hood exhaust systems - Bulletin 722-J.

PLASITE 7122 contains more than 0.1% carcinogenic by 21 CFR, 175.300. FOR INDUSTRIAL USE ONLY!

TEMPERATURE RESISTANCE
Continuous 300 to 400°F for short periods. Continuous temperature limits depend on particular usage.

COLORS
PLASITE 7122 - Green, Lt. Gray, Med. Gray, White, Lt. Blue.
PLASITE 7122HAR - Green, Lt. Gray, Med. Gray, White.
PLASITE 7122FFE - Off White, Lt. Gray, Med. Gray.
PLASITE 7122HARAS - Lt. Gray, Med. Gray, Green
PLASITE 7122JAS - Gray

Water Stains colors may not be suitable for food service. Consult Plaslite Technical Service Department.

VOC CONTENT

| Solids | Lbs./Gal. | gr/l | Grams/Liter |
|---|---|---|---|
| 78% | 9.09 ±0% | 109 ±2% | 0.0 ±0% |
| 79.5±4% | 9.24 ±2% | 105 ±1

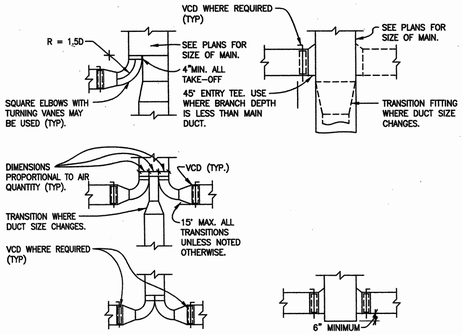


NOTE: DETAIL APPLICABLE WHERE BRANCH AIR QUANTITIES ARE 1,000 CFM OR MORE.

**LARGE BRANCH DUCT**

NOTE: DETAIL APPLICABLE WHERE BRANCH AIR QUANTITIES ARE LESS THAN 1,000 CFM

**SMALL BRANCH DUCT**

(LOW VELOCITY 1300 FPM, DUCT SYSTEMS ONLY.)

NOTE: DUCT SYSTEMS NOT INSTALLED IN ACCORDANCE WITH THIS DETAIL WILL BE REJECTED.

## LOW VELOCITY BRANCH DUCT TAKE-OFF DETAIL

NO SCALE — 1 / M6.1

ROUND DUCT SIZE SHALL NOT EXCEED PRESSURE DROP OF .06"/ 100FT OF DUCT. AND VELOCITY OF RECTANGULAR RUNOUT CONNECTED TO, EXCEPT AT LAB DIFFUSERS (TRITEC). AT 24x48 LAB DIFFUSERS, TRANSITION TO DIFFUSER INLET SIZE.

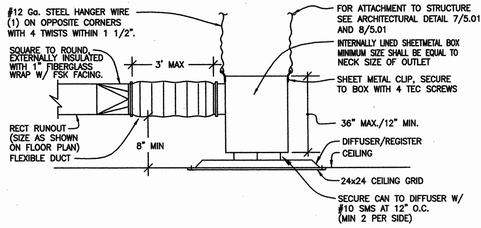


NOTES:
1. NO BENDS GREATER THAN 45° WILL BE ALLOWED IN FLEXIBLE DUCTS.
2. MINIMUM BEND RADIUS FOR FLEXIBLE DUCTS SHALL NOT BE LESS THAN 1.5
3. WIRE TIE EXTERNAL INSTALLATION IN PLACE AT MINIMUM OF 3 LOCATIONS.
4. VERIFY SHEET METAL SCREW (SMS) USED TO ATTACHED TO DIFFUSER DOES NOT IMPEDE OPPOSED BLADE DAMPER (OBD) OPPERATION.

## DUCT CONNECTION TO DIFFUSER/ REGISTER DETAIL

NO SCALE: — 4 / M6.1

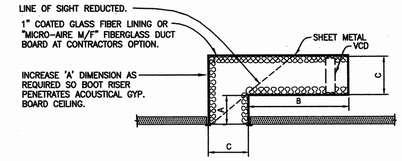


A = 1/2 C MIN.
*A+B = 4.5C MIN.
DIMENSIONS ARE MINIMUM VALUES INCREASE IF REQUIRED FOR COORDINATION

## RETURN AIR BOOT DETAIL

SEE RFI 328

NO SCALE: — 8 / M6.1

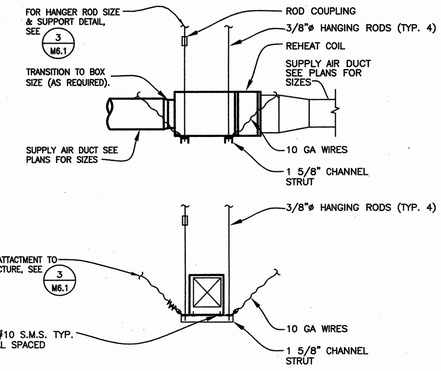


## VAV BOX SUPPORT DETAIL

NO SCALE: — 12 / M6.1

SEE RFI 233

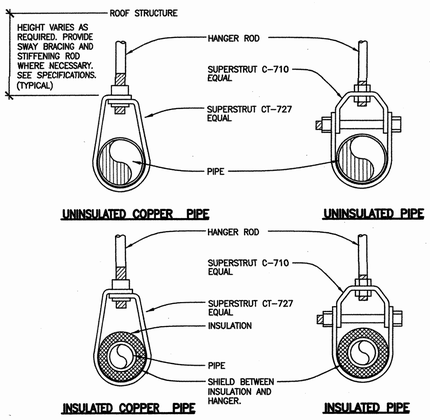


NOTE: FOR HANGER ROD SIZE & SUPPORT DETAIL, SEE 3 / M6.1

## PIPE HANGER DETAIL

NO SCALE: — 2 / M6.1

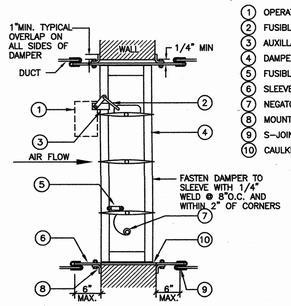


1. OPERATOR/ACTUATOR
2. FUSIBLE ROD
3. AUXILLARY OPERATING JACK SHAFT
4. DAMPER FRAME
5. FUSIBLE LINK LOCK
6. SLEEVE
7. NEGATOR SPRING
8. MOUNTING ANGLES (1 1/2"x 1 1/2" x 1/8")
9. S-JOINT, SLEEVE TO DUCT
10. CAULKING MATERIAL (GE RTV 108 SEALANT)

1. FIRE DAMPER DETAIL FOR REFERENCE ONLY.
2. FIRE DAMPERS SHALL BE STATE FIRE MARSHALL APPROVED AND INSTALLED STRICTLY PER MANUFACTURER'S PRINTED INSTRUCTIONS.
3. MANUFACTURER'S INSTALLATION INSTRUCTIONS SHALL BE MADE AVAILABLE TO THE INSPECTING AUTHORITIES.

## COMBINATION FIRE/SMOKE DAMPER DETAIL

NO SCALE: — 5 / M6.1

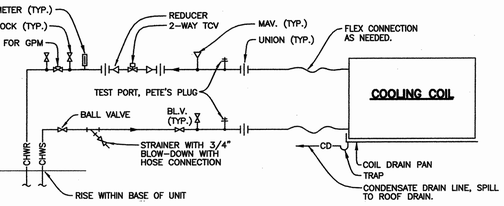


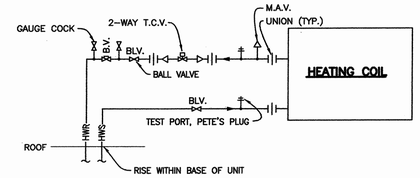


NOTES:
1. ALL VALVES, FITTINGS, ETC., SHALL BE SAME SIZE AS BRANCH PIPING UNLESS NOTED OTHERWISE.
2. ALL VALVES, FITTINGS, ETC., SHALL BE LOCATED WITHING THE CORE SIDE OF THE INTERIOR OF THE PEREMITER.
3. UNITS TO BE PROVIDED WITH PIPING CHASES, PIPES TO ENTER WITHIN UNIT CURB.

## AHU COIL PIPING DETAILS

SEE RFI 497, SHEET M4.1

NO SCALE — 9 / M6.1

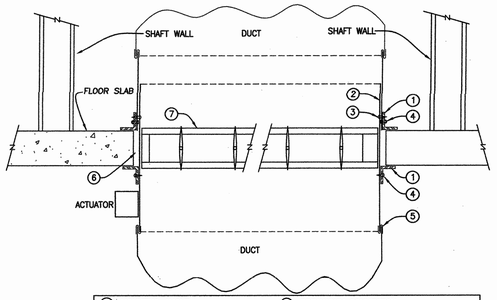


| | |
|---|---|
| 1 MOUNTING ANGLE | 5 BREAKAWAY CONNECTION |
| 2 CSFD INNER SLEEVE | 6 FILL ANNULAR SPACE WITH FIRE CAULKING |
| 3 FASTENERS AT 8" O.C. | 7 COMBINATIN FIRE/SMOKE DAMPER, RUSKIN MODEL ESD-36C |
| 4 3/8" DIA. BOLT AND NUT, 2 PER SIDE | |

## CSFD DETAIL FLOOR SHAFTS

NO SCALE:

NOTES:
1. DETAIL ABOVE IS FOR REFERENCE PURPOSES ONLY.
2. COMBINATION SMOKE/FIRE DAMPERS SHALL BE INSTALLED IN ACCORDANCE WITH MANUFACTURER'S INSTALLATION INSTRUCTIONS.
3. PROVIDE HINGED ACCESS DOOR AT EACH DAMPER LOCATION, SEE SPECIFICATIONS FOR ACCESS DOOR.
4. OUTER SLEEVE SHALL BE PROVIDED BY INSTALLING CONTRACTOR.

## HORIZONTAL CFSD

EVERTICAL

NO SCALE: — 13 / M6.1

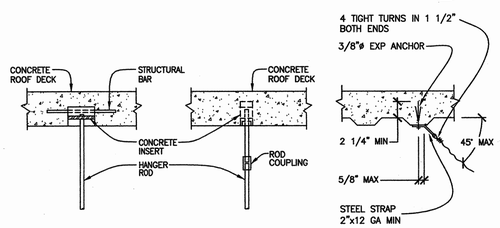


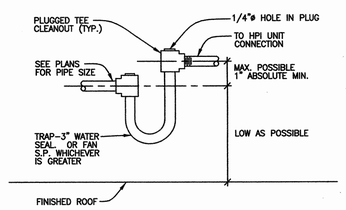


## DRAIN PIPE DETAIL

NO SCALE: — 6 / M6.1

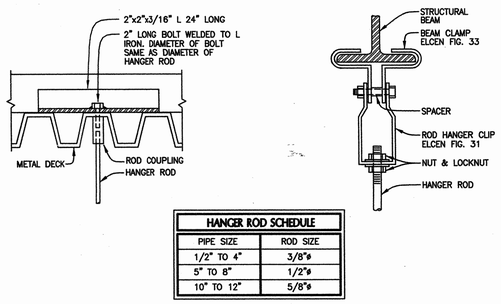


| HANGER ROD SCHEDULE | |
|---|---|
| PIPE SIZE | ROD SIZE |
| 1/2" TO 4" | 3/8"ø |
| 5" TO 8" | 1/2"ø |
| 10" TO 12" | 5/8"ø |

SEE RFI 233

## HANGER ROD SUPPORT DETAILS

NO SCALE: — 3 / M6.1

DELETED PER ADDENDUM NO. 2

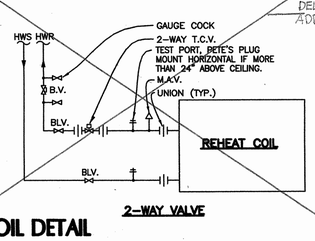


## REHEAT COIL DETAIL

NO SCALE: — 7 / M6.1

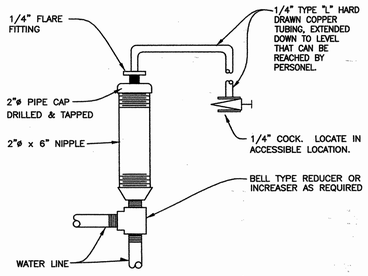


INSTALL AT ALL HIGH POINTS OF NEW PIPING AS DETAILED.

## MANUAL AIR VENT DETAIL

NO SCALE: — 10 / M6.1

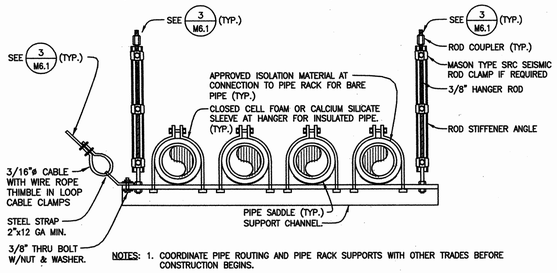


NOTES: 1. COORDINATE PIPE ROUTING AND PIPE RACK SUPPORTS WITH OTHER TRADES BEFORE CONSTRUCTION BEGINS.

## TRAPEZE PIPE RACK

NO SCALE: — 11 / M6.1

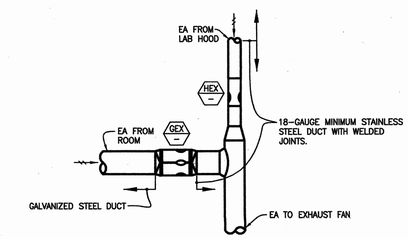


**EXHAUST AIR SYSTEM**

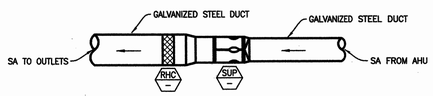


**SUPPLY AIR SYSTEM**

SEE RFI 261 & 261.1

## LABRATORY DUCT CONSTRUCTION DETAIL

NO SCALE — 14 / M6.1


tBP
architecture planning interiors management
tBP/Architecture
1000 Burnett Avenue, Suite 140
Concord, CA 94520
p: 925.246.6419 f: 925.246.6495
LICENSED ARCHITECT — CALIFORNIA
architect

AINSWORTH ASSOCIATES
MECHANICAL ENGINEERS
SACRAMENTO, CA
LICENSED PROFESSIONAL ENGINEER — CALIFORNIA
consultant

name
address
city, state, zip
ph: fx:
agency


# SCIENCE BUILDING LOS MEDANOS COLLEGE

Contra Costa Community College District

owner

tBP project number : 20247.00

file name:

drawn by: checked by:

date: NOVEMBER 15, 2004

| Rev: | date: | description: |
|---|---|---|

drawing title: MECHANICAL-DETAILS

LMC SCIENCE 313-023-T12.01-0-00.00

drawing no.: M6.1

drawing of ?

U:\2025-005\DWG\M-6-Lang Time.Nov\12004-03.49pm

# SYSTEM NO. C-AJ-5002

F RATINGS – 2 AND 3 HR (SEE ITEMS 1A AND 4)
T RATINGS – 0, 1/2 AND 1 HR (SEE ITEMS 1A AND 4)
L RATING AT AMBIENT – 2 CFM/sq ft
L RATING AT 400 F – LESS THAN 1 CFM/sq ft

1. FLOOR OR WALL ASSEMBLY – MIN 2-1/2 IN. THICK REINFORCED LIGHTWEIGHT OR NORMAL WEIGHT (100-150 PCF) CONCRETE. WALL MAY ALSO BE CONSTRUCTED OF ANY UL CLASSIFIED CONCRETE BLOCKS*. MAX DIAM OF OPENING IS 36 IN. SEE CONCRETE BLOCKS (CAZT) CATEGORY IN THE FIRE RESISTANCE DIRECTORY FOR NAMES OF MANUFACTURERS.
   1A. STEEL SLEEVE (OPTIONAL, NOT SHOWN) – NOM 36 IN. DIAM (OR SMALLER) SCHEDULE 10 (OR HEAVIER) STEEL PIPE SLEEVE CAST INTO MIN 4-1/2 IN. THICK CONCRETE FLOOR OR WALL. SLEEVE TO BE FLUSH WITH OR PROJECT MAX 2 IN. FROM TOP SURFACE OF FLOOR OR FROM BOTH SURFACES OF WALL. WHEN STEEL SLEEVE IS USED, F RATING IS 2 HR AND T RATING IS 0 HR.
2. PIPE – NOM 4 IN. DIAM (OR SMALLER) TYPE L (OR HEAVIER) COPPER PIPE, NOM 15 IN. DIAM (OR SMALLER) SERVICE WEIGHT (OR HEAVIER) CAST IRON SOIL PIPE, NOM 30 IN. DIAM (OR SMALLER) CLASS 50 (OR HEAVIER) DUCTILE IRON PRESSURE PIPE OR NOM 30 IN. DIAM (OR SMALLER) SCHEDULE 10 (OR HEAVIER) STEEL PIPE CENTERED IN THE OPENING AND RIGIDLY SUPPORTED ON BOTH SIDES OF THE FLOOR OR WALL ASSEMBLY.
3. PIPE COVERING* – NOM 1, 2 OR 3 IN. THICK HOLLOW CYLINDRICAL HEAVY DENSITY (MIN. 3.5 PCF) GLASS FIBER UNITS JACKETED ON THE OUTSIDE WITH AN ALL SERVICE JACKET. LONGITUDINAL JOINTS SEALED WITH METAL FASTENERS OR FACTORY-APPLIED SELF-SEALING LAP TAPE. TRANSVERSE JOINTS SECURED WITH METAL FASTENERS OR WITH BUTT STRIP TAPE SUPPLIED WITH THE PRODUCT. SEE PIPE AND EQUIPMENT COVERING – MATERIALS* (BRGU) CATEGORY IN BUILDING MATERIALS DIRECTORY FOR NAMES OF MANUFACTURERS. ANY PIPE COVERING MATERIAL MEETING THE ABOVE SPECIFICATIONS AND BEARING THE UL CLASSIFICATION MARKING WITH A FLAME SPREAD INDEX OF 25 OR LESS AND A SMOKE DEVELOPED INDEX OF 50 OR LESS MAY BE USED.
4. FIRESTOP SYSTEM – THE DETAILS OF THE FIRESTOP SYSTEM SHALL BE AS FOLLOWS:
   A. FILL,VOID OR CAVITY MATERIALS* – WRAP STRIP – NOM 1/4 IN. THICK INTUMESCENT ELASTOMERIC MATERIAL FACED ON ONE SIDE WITH ALUMINUM FOIL, SUPPLIED IN 2 IN. WIDE BY 24 IN. LONG STRIPS. NOM 2 IN. WIDE STRIPS TIGHTLY-WRAPPED AROUND PIPE COVERING (FOIL SIDE EXPOSED) TO FILL ANNULAR SPACE. EACH LAYER OF WRAP STRIP IS TO BE INSTALLED WITH A BUTTED SEAM, WITH THE BUTTED SEAMS IN SUCCESSIVE LAYERS STAGGERED. WRAP STRIP LAYERS SECURELY BOUND WITH STEEL WIRE OR ALUMINUM FOIL TAPE AND SLIDE INTO ANNULAR SPACE SUCH THAT THE TOP EDGES ARE RECESSED MIN 1/2 IN. FORM TOP SURFACE OF FLOOR. IN WALL ASSEMBLIES, THE WRAP STRIP LAYERS SHALL BE INSTALLED IN THE SAME MANNER USED FOR FLOOR ASSEMBLIES BUT SHALL BE INSTALLED SYMMETRICALLY ON BOTH SIDES OF THE WALL. THE MIN NUMBER OF WRAP STRIP LAYERS REQUIRED IS DEPENDENT UPON THE MAX PIPE SIZE AND THE PIPE COVERING THICKNESS, AS SHOWN IN THE ADJACENT TABLE:
   A. FILL,VOID OR CAVITY MATERIALS* – CAULK – APPLIED TO FILL THE ANNULAR SPACE (OVER EDGES OF WRAP STRIP LAYERS) TO A MIN DEPTH OF 1/2 IN., FLUSH WITH TOP SURFACE OF FLOOR OR BOTH SURFACES OF WALL.

   MINNESOTA MINING & MFG CO – CP 25WB+
   *BEARING THE UL CLASSIFICATION MARKING

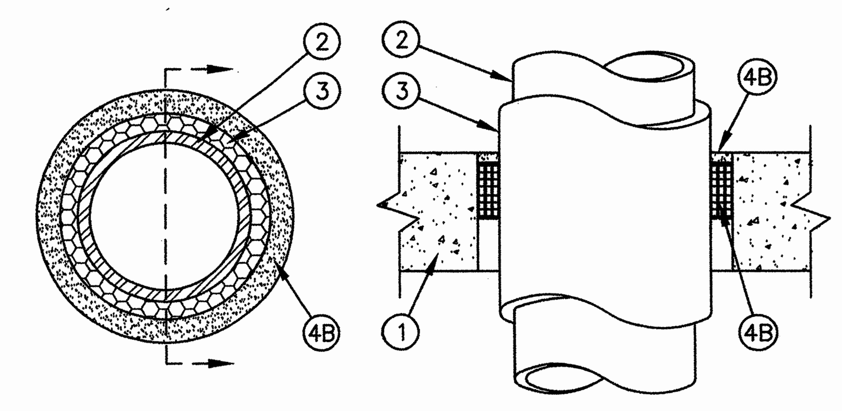


| Min Floor or Wall Thkns In. | Max Pipe Dia In. | Nom Pipe Covering Thkns In. | Annular Space In. | Min. No. of Wrap Strip Layers | F Rating Hr | T Rating Hr |
|---|---|---|---|---|---|---|
| 2-1/2 | 6 | 1 | 1/4 to 3/8 | 1 | 2 | 1 |
| 2-1/2 | 6 | 2 | 1/2 to 5/8 | 2 | 2 | 1 |
| 2-1/2 | 12 | 1 | 1/4 to 3/8 | 1 | 2 | 1/2 |
| 4-1/2 | 12 | 1 | 1/4 to 3/8 | 1 | 2 | 1 |
| 4-1/2 | 12 | 2 | 1/2 to 5/8 | 2 | 2 | 1 |
| 4-1/2 | 20 | 1 | 1/2 to 1 | 2 | 2 | 1 |
| 4-1/2 | 30 | 2 | 3/4 to 1-1/4 | 3 | 2 | 1 |
| 4-1/2 | 20 | 3 | 1 to 1-1/2 | 4 | 2 | 1 |

**INSULATED PIPE**

# SYSTEM NO C-AJ-1014

(FORMERLY SYSTEM NO. 133)
F RATING--2 HR
T RATING--0 HR
L RATING AT AMBIENT--LESS THAN 1 CFM/sq ft (SEE ITEM 4)
L RATING AT 400° F--LESS THAN 1 CFM/sq ft (SEE ITEM 4)

1. FLOOR OR WALL ASSEMBLY – MIN 3-1/4 IN. THICK REINFORCED LIGHTWEIGHT OR NORMAL WEIGHT (100-150 PCF) CONCRETE. WALL MAY ALSO BE CONSTRUCTED OF ANY UL CLASSIFIED CONCRETE BLOCKS*. MAX DIAM OF CIRCULAR OPENING IS 6 IN.
SEE CONCRETE BLOCKS (CAZT) CATEGORY IN THE FIRE RESISTANCE DIRECTORY FOR NAMES OF MANUFACTURERS.

2. THROUGH PENETRANTS – ONE METALLIC PIPE OR CONDUIT TO BE CENTERED WITHIN THE FIRESTOP SYSTEM. A NOM ANNULAR SPACE OF 3/4 IN. IS REQUIRED WITHIN THE FIRESTOP SYSTEM. PIPE OR CONDUIT TO BE RIGIDLY SUPPORTED ON BOTH SIDES OF FLOOR OR WALL ASSEMBLY. THE FOLLOWING TYPES AND SIZES OF METALLIC PIPES OR CONDUITS MAY BE USED:

A. NOM 4 IN. DIAM (OR SMALLER) SCHEDULE 10 (OR HEAVIER) STEEL PIPE.

B. CONDUIT – NOM 4 IN. DIAM (OR SMALLER) STEEL ELECTRICAL METALLIC TUBING OR STEEL CONDUIT.

3. PACKING MATERIAL – MIN 4 PCF MINERAL WOOL BATT INSULATION FIRMLY PACKED INTO OPENING AS A PERMANENT FORM. PACKING MATERIAL TO BE RECESSED FROM TOP SURFACE OF FLOOR OR FROM BOTH SURFACES OF WALL AS REQUIRE TO ACCOMMODATE THE REQUIRED THICKNESS OF FILL MATERIAL.
MIN THICKNESS OF PACKING MATERIAL IN FLOORS AND WALLS TO BE 2-3/4 IN. AND 2-1/4 IN., RESPECTIVELY.

4. FILL,VOID OR CAVITY MATERIAL* – SEALANT – MIN 1/2 IN. THICKNESS OF FILL MATERIAL APPLIED WITHIN ANNULUS, FLUSH WITH TOP SURFACE OF FLOOR OR WITH BOTH SURFACES OF WALL. AS AN ALTERNATE, THE PERMANENT FORMING MATERIAL (ITEM 3) MAY BE OMITTED IF THE FILL MATERIAL THICKNESS IS INCREASED TO A MIN 1-1/2 IN.
MINNESOTA MINING & MFG CO – TYPES FB-2000 OR FB-2000+.
(NOTE: L RATINGS APPLY ONLY WHEN FB-2000+ IS USED.)
*BEARING THE UL CLASSIFICATION MARKING

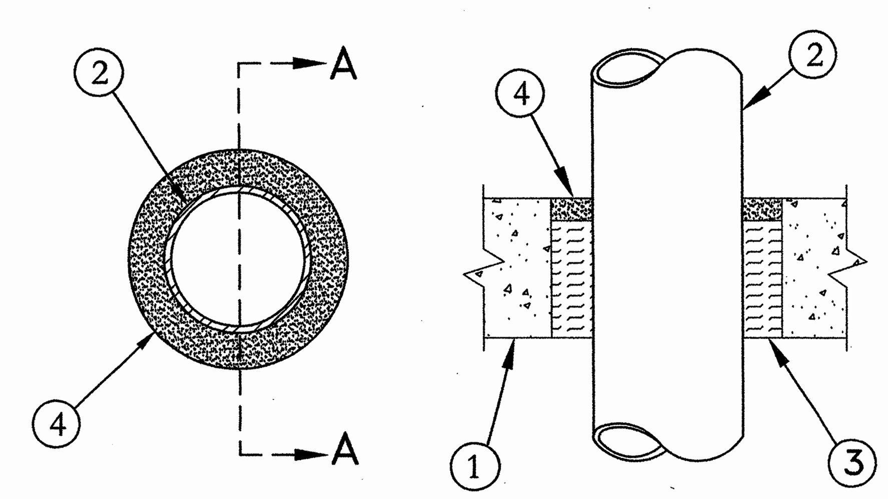


SECTION A-A

**UNINSULATED PIPE**

**PIPE THRU CONCRETE FLOOR DETAIL**
NO SCALE

1 / M6.2

# SYSTEM NO. W-L-5032

F RATING – 2 HR
T RATING – 1 OR 2 HR (SEE ITEMS 3 AND 3A)

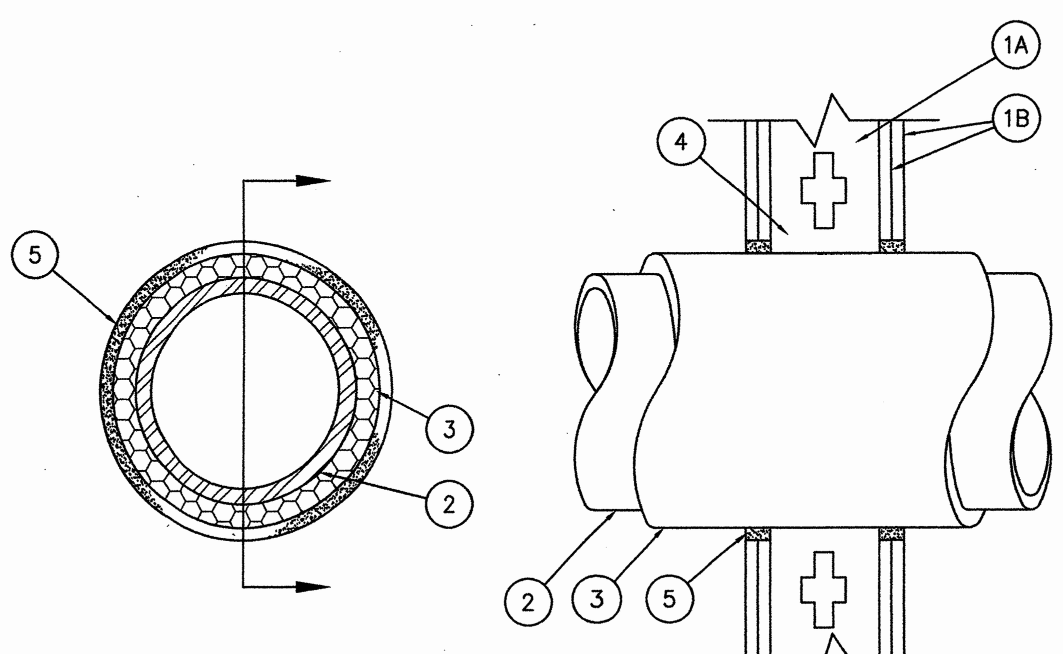


1. WALL ASSEMBLY – THE FIRE-RATED GYPSUM WALLBOARD/STUD WALL ASSEMBLY SHALL BE CONSTRUCTED OF THE MATERIALS AND IN THE MANNER SPECIFIED IN THE INDIVIDUAL U300 OR U400 SERIES WALL AND PARTITION DESIGNS IN THE UL FIRE RESISTANCE DIRECTORY AND SHALL INCLUDE THE FOLLOWING CONSTRUCTION FEATURES:
   A. STUDS – WALL FRAMING MAY CONSIST OF EITHER WOOD STUDS OR STEEL CHANNEL STUDS. WOOD STUDS TO CONSIST OF NOM 2 BY 4 IN. LUMBER SPACED 16 IN. OC. STEEL STUDS TO BE MIN 2-1/2 IN. WIDE AND SPACED MAX 24 IN. OC. WHEN STEEL STUDS ARE USED AND THE DIAM AT THE OPENING EXCEEDS THE WIDTH OF STUD CAVITY, THE OPENING SHALL BE FRAMED ON ALL SIDES USING LENGTHS OF STEEL STUD INSTALLED BETWEEN THE VERTICAL STUDS AND SCREW-ATTACHED TO THE STEEL STUDS AT EACH END. THE FRAMED OPENING IN THE WALL SHALL BE 7-1/2 IN. WIDER AND 7-1/2 IN. HIGHER THAN THE DIAM OF THE PENETRATING ITEM SUCH THAT, WHEN THE PENETRATING ITEM IS CENTERED IN THE OPENING, A 3-3/4 IN. CLEARANCE IS PRESENT BETWEEN THE PENETRATING ITEM AND THE FRAMING IN ALL FOUR SIDES.
   B. GYPSUM BOARD* – TWO LAYERS OF 5/8 IN. THICK GYPSUM WALLBOARD, AS SPECIFIED IN THE INDIVIDUAL WALL AND PARTITION DESIGN. MAX DIAM OF OPENING IS 14-1/2 IN. FOR WOOD STUD WALLS AND 31-1/2 IN. FOR STEEL STUD WALLS.
2. THROUGH PENETRANTS – ONE METALLIC PIPE, CONDUIT OR TUBING TO BE INSTALLED EITHER CONCENTRICALLY OR ECCENTRICALLY WITHIN THE FIRESTOP SYSTEM. PIPE, CONDUIT OR TUBING TO BE RIGIDLY SUPPORTED ON BOTH SIDES OF FLOOR OR WALL ASSEMBLY. THE FOLLOWING TYPES AND SIZES OF METALLIC PIPES, CONDUITS OR TUBING MAY BE USED:
   A. STEEL PIPE – NOM 24 IN. DIAM (OR SMALLER) SCHEDULE 10 (OR HEAVIER) STEEL PIPE.
   B. CONDUIT – NOM 4 IN. DIAM (OR SMALLER) ELECTRICAL METALLIC TUBING OR STEEL CONDUIT.
   C. COPPER TUBING – NOM 6 IN. DIAM (OR SMALLER) TYPE L (OR HEAVIER) COPPER TUBING.
   D. COPPER PIPE – NOM 6 IN. DIAM (OR SMALLER) REGULAR (OR HEAVIER) COPPER PIPE.
3. PIPE COVERING MATERIALS* – USED IN CONJUNCTION WITH ITEM 4. NOM 3 IN. THICK UNFACED MINERAL FIBER PIPE INSULATION SIZED TO THE OUTSIDE DIAM OF PIPE OR TUBE. PIPE INSULATION SECURED WITH MIN 8 AWG STEEL WIRE SPACED MAX 12 IN. OC. AN NOM ANNULAR SPACE OF 3/4 IN. IS REQUIRED WITHIN THE FIRESTOP SYSTEM. WHEN MINERAL WOOL PIPE COVERING IS USED, THE T RATING IS 2 HR. OWENS CORNING HT INC, DIV OF OWENS CORNING – HIGH TEMPERATURE PIPE INSULATION 1200, HIGH TEMPERATURE PIPE INSULATION BWT OR HIGH TEMPERATURE PIPE INSULATION THERMALOC
   A. PIPE COVERING* – USED AS AN ALTERNATE TO ITEM 3 AND 4. NOM 1 IN. THICK HOLLOW CYLINDRICAL HEAVY DENSITY (MIN 3.5 PCF) GLASS FIBER UNITS JACKETED ON THE OUTSIDE WITH AN ALL SERVICE JACKET. LONGITUDINAL JOINTS TIGHTLY BUTTED AND SEALED WITH METAL FASTENERS OR FACTORY APPLIED SELF-SEALING LAP TAPE. TRANSVERSE JOINTS SECURED WITH METAL FASTENERS OR WITH BUTT TAPE SUPPLIED WITH THE PRODUCT. A NOM ANNULAR SPACE OF 3/4 IN. IS REQUIRED WITHIN THE FIRESTOP SYSTEM. WHEN GLASS FIBER PIPE COVERING IS USED, THE T RATING IS 1 HR. SEE PIPE AND EQUIPMENT COVERING – MATERIALS (BRGU) CATEGORY IN THE BUILDING MATERIALS DIRECTORY FOR THE NAMES OF MANUFACTURERS. ANY PIPE COVERING MATERIAL MEETING THE ABOVE SPECIFICATIONS AND BEARING THE UL CLASSIFICATION MARKING WITH A FLAME SPREAD INDEX OF 25 OR LESS AND A SMOKE DEVELOPED INDEX OF 50 OR LESS MAY BE USED.
4. SHEETING MATERIAL (NOT SHOWN) – USED IN CONJUNCTION WITH ITEM 3. FOIL-SCRIM-KRAFT OR ALL SERVICE JACKET MATERIAL SHALL BE WRAPPED AROUND THE OUTER CIRCUMFERENCE OF THE PIPE COVERING MATERIAL (ITEM 3) WITH THE KRAFT SIDE EXPOSED. LONGITUDINAL JOINTS SEALED WITH METAL FASTENERS. SEE SHEATHING MATERIALS (BVDV) CATEGORY IN THE BUILDING MATERIALS DIRECTORY FOR NAMES OF MANUFACTURERS. ANY SHEATHING MATERIAL MEETING THE ABOVE SPECIFICATIONS AND BEARING THE UL CLASSIFICATION MARKING WITH A FLAME SPREAD INDEX OF 25 OR LESS AND A SMOKE DEVELOPED INDEX OF 50 OR LESS MAY BE USED.
5. FILL,VOID OR CAVITY MATERIAL* – SEALANT – MIN 1-1/4 IN. THICKNESS OF FILL MATERIAL APPLIED WITHIN THE ANNULUS ON BOTH SURFACES OF WALL. ADDITIONAL FILL MATERIAL TO BE INSTALLED SUCH THAT A MIN 1/4 IN. CROWN IS FORMED AROUND THE PENETRATING ITEM.

**INSULATED PIPE**

# SYSTEM NO. W-L-1010

F RATING-- 2 HR
T RATING--0 HR
L RATING AT AMBIENT--LESS THAN 1 CFM/sq ft (SEE ITEM 3)
L RATING AT 400° F--LESS THAN 1 CFM/sq ft (SEE ITEM 3)

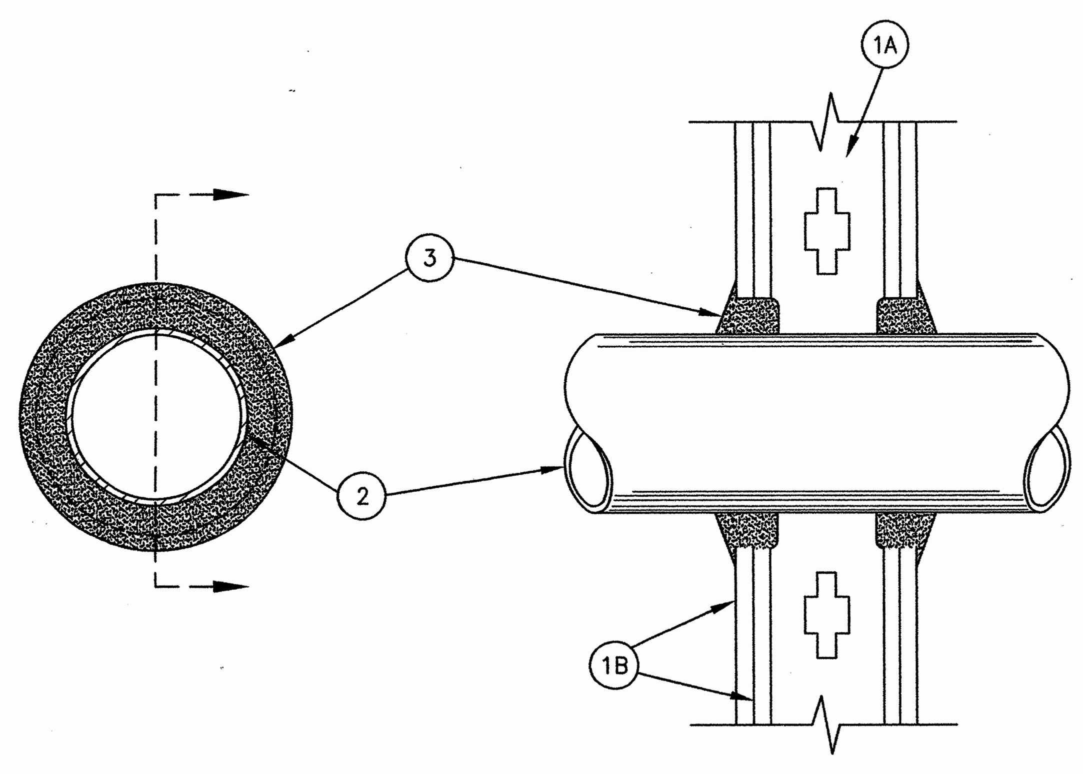


1. WALL ASSEMBLY – THE FIRE RATED GYPSUM WALLBOARD/STUD WALL ASSEMBLY SHALL BE CONSTRUCTED OF THE MATERIALS AND IN THE MANNER SPECIFIED IN THE INDIVIDUAL U300 OR U400 SERIES WALL AND PARTITION DESIGNS IN THE UL FIRE RESISTANCE DIRECTORY AND SHALL INCLUDE THE FOLLOWING CONSTRUCTION FEATURES:
   A. STUDS – WALL FRAMING MAY CONSIST OF EITHER WOOD STUDS OR STEEL CHANNEL STUDS. WOOD STUDS TO CONSIST OF NOM 2 BY 4 IN. LUMBER SPACED 16 IN. OC. STEEL STUDS TO BE MIN 2-1/2 IN. WIDE AND SPACED MAX 24 IN. OC. WHEN STEEL STUDS ARE USED AND THE DIAM OF OPENING EXCEEDS THE WIDTH OF STUD CAVITY, THE OPENING SHALL BE FRAMED ON ALL SIDES USING LENGTHS OF STEEL STUD INSTALLED BETWEEN THE VERTICAL STUDS AND SCREW ATTACHED TO THE STEEL STUDS AT EACH END. THE FRAMED OPENING IN THE WALL SHALL BE 4 TO 6 IN. WIDER AND 4 TO 6 IN. HIGHER THAN THE DIAM OF THE PENETRATING ITEM SUCH THAT, WHEN THE PENETRATING ITEM IS CENTERED IN THE OPENING, A 2 TO 3 IN. CLEARANCE IS PRESENT BETWEEN THE PENETRATING ITEM AND THE FRAMING IN ALL FOUR SIDES.
   B. GYPSUM BOARD* – TWO LAYERS OF NOM 5/8 IN. THICK GYPSUM WALLBOARD, AS SPECIFIED IN THE INDIVIDUAL WALL AND PARTITION DESIGN. MAX DIAM OF OPENING IS 14-1/2 IN. FOR WOOD STUD WALLS AND 25-1/2 IN. FOR STEEL STUD WALLS.
2. THROUGH PENETRANTS – ONE METALLIC PIPE, CONDUIT OF TUBING TO BE CENTERED WITHIN THE FIRESTOP SYSTEM. PIPE, CONDUIT OR TUBING TO BE RIGIDLY SUPPORTED ON BOTH SIDES OF WALL ASSEMBLY. THE FOLLOWING TYPES AND SIZES OF METALLIC PIPES, CONDUITS OR TUBING MAY BE USED:
   A. STEEL PIPE – NOM 24 IN. DIAM (OR SMALLER) SCHEDULE 10 (OR HEAVIER) STEEL PIPE. A NOM ANNULAR SPACE OF 3/4 IN. IS REQUIRED WITHIN THE FIRESTOP SYSTEM.
   B. STEEL PIPE – NOM 4 IN. DIAM (OR SMALLER) SCHEDULE 5 (OR HEAVIER) STEEL PIPE. A NOM ANNULAR SPACE OF 3/4 IN. IS REQUIRED WITHIN THE FIRESTOP SYSTEM.
   C. CONDUIT – NOM 4 IN. DIAM (OR SMALLER) STEEL ELECTRICAL METALLIC TUBING OR STEEL CONDUIT. A NOM ANNULAR SPACE OF 3/4 IN. IS REQUIRED WITHIN THE FIRESTOP SYSTEM.
   D, COPPER TUBING – NOM 6 IN. DIAM (OR SMALLER) TYPE L (OR HEAVIER) COPPER TUBING. A NOM ANNULAR SPACE OF 3/4 IN. IS REQUIRED WITHIN THE FIRESTOP SYSTEM.
3. FILL,VOID OR CAVITY MATERIAL* – SEALANT – MIN 1-1/4 IN. THICKNESS OF FILL MATERIAL APPLIED WITHIN THE ANNULUS ON BOTH SURFACES OF WALL. ADDITIONAL FILL MATERIAL TO BE INSTALLED SUCH THAT A MIN 1/4 IN. CROWN IS FORMED AROUND THE PENETRATING ITEM. MINNESOTA MINING & MFG CO – TYPES FB-2000, FB-2000+. (NOTE: L RATINGS APPLY ONLY WHEN FB-2000+ IS USED).

*BEARING THE UL CLASSIFICATION MARKING

**UNINSULATED PIPE**

**PIPE THRU 1 HOUR FIRE RATED WALL DETAIL**
NO SCALE

2 / M6.2

# SYSTEM NO. W-L-5001

F RATINGS – 1 AND 2 HR (SEE ITEM 1)
T RATINGS – 3/4, 1 AND 1-1/2 HR (SEE ITEM 3)
L RATING AT AMBIENT – 2 CFM/sq ft
L RATING AT 400 F – LESS THAN 1 CFM/sq ft

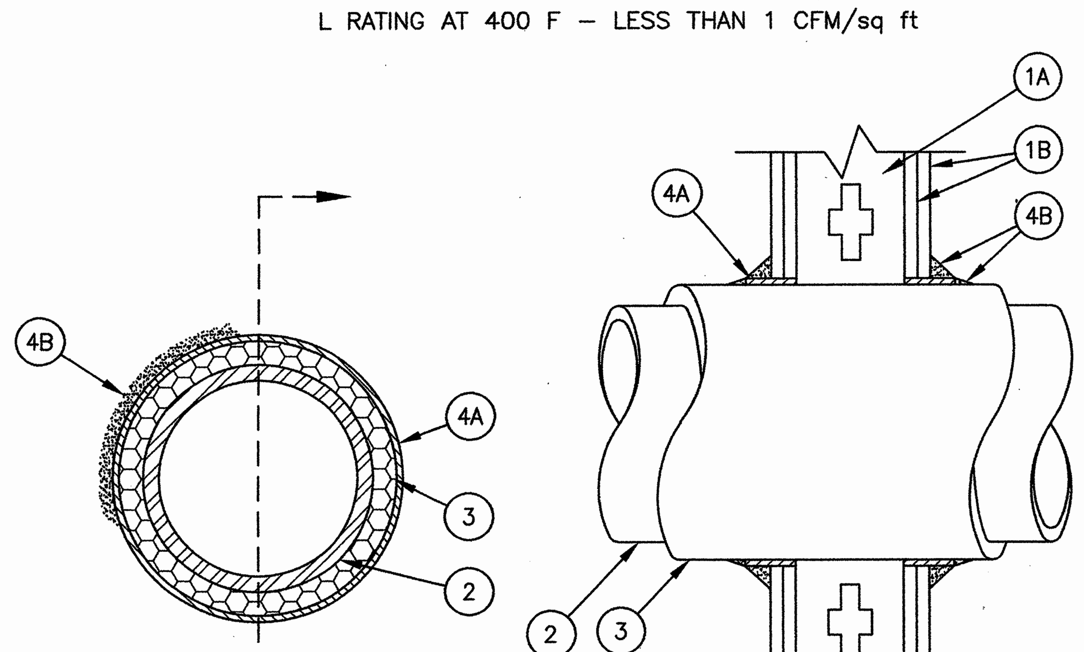


1. WALL ASSEMBLY – THE 1 OR 2 HR FIRE-RATED GYPSUM WALLBOARD/STUD WALL ASSEMBLY SHALL BE CONSTRUCTED OF THE MATERIALS AND IN THE MANNER DESCRIBED IN THE INDIVIDUAL U300 OR U400 SERIES WALL OR PARTITION DESIGN IN THE UL FIRE RESISTANCE DIRECTORY AND SHALL INCLUDE THE FOLLOWING CONSTRUCTION FEATURES:
   A. STUDS – WALL FRAMING MAY CONSIST OF EITHER WOOD STUDS OR STEEL CHANNEL STUDS. WOOD STUDS TO CONSIST OF NOM 2 BY 4 IN. LUMBER SPACED 16 IN. OC WITH NOM 2 BY 4 IN. LUMBER END PLATES AND CROSS BRACES. STEEL STUDS TO BE MIN 3-5/8 IN. WIDE BY 1-3/8 IN. DEEP CHANNELS SPACED MAX 24 IN. OC.
   B. GYPSUM BOARD* – NOM 5/8 IN. THICK, 4 FT WIDE WITH SQUARE OR TAPERED EDGES. THE GYPSUM WALLBOARD TYPE, THICKNESS, NUMBER OF LAYERS, FASTENER TYPE AND SHEET ORIENTATION SHALL BE AS SPECIFIED IN THE INDIVIDUAL U300 OR U400 SERIES DESIGN IN THE UL FIRE RESISTANCE DIRECTORY. MAX DIAM OF OPENING IS 14-1/2 IN FOR WOOD STUD WALLS AND 18 IN. FOR STEEL STUD WALLS. THE HOURLY F RATING OF THE FIRESTOP SYSTEM IS 1 HR WHEN INSTALLED IN A 1 HR FIRE RATED WALL AND 2 HR WHEN INSTALLED IN A 2 HR FIRE RATED WALL.
2. THROUGH PENETRANTS – ONE METALLIC PIPE OR TUBING TO BE CENTERED WITHIN THE FIRESTOP SYSTEM. PIPE OR TUBING TO BE RIGIDLY SUPPORTED ON BOTH SIDES OF WALL ASSEMBLY. THE FOLLOWING TYPES AND SIZES OF METALLIC PIPES OR TUBING MAY BE USED:
   A. STEEL PIPE – NOM 12 IN. DIAM (OR SMALLER) SCHEDULE 10 (OR HEAVIER) STEEL PIPE.
   B. COPPER TUBING – NOM 6 IN. DIAM (OR SMALLER) TYPE L (OR HEAVIER) COPPER TUBING.
   C. COPPER PIPE – NOM 6 IN. DIAM (OR SMALLER) REGULAR (OR HEAVIER) COPPER PIPE.
3. PIPE COVERING* – NOM 1 OR 2 IN. THICK HOLLOW CYLINDRICAL HEAVY DENSITY (MIN 3.5 PCF) GLASS FIBER UNITS JACKETED ON THE OUTSIDE WITH AN ALL SERVICE JACKET. LONGITUDINAL JOINTS SEALED WITH METAL FASTENERS OR FACTORY-APPLIED SELF-SEALING LAP TAPE. TRANSVERSE JOINTS SEALED WITH METAL FASTENERS OR WITH BUTT STRIP TAPE SUPPLIED WITH THE PRODUCT. WHEN NOM 1 IN. THICK PIPE COVERING IS USED, THE ANNULAR SPACE BETWEEN THE PIPE COVERING AND THE CIRCULAR CUTOUT IN THE GYPSUM WALLBOARD LAYERS ON EACH SIDE OF THE WALL SHALL BE MIN 1/4 IN. TO MAX 3/8 IN. WHEN NOM 2 IN. THICK PIPE COVERING IS USED, THE ANNULAR SPACE BETWEEN THE PIPE COVERING AND THE CIRCULAR CUTOUT IN THE GYPSUM WALLBOARD LAYERS ON EACH SIDE OF THE WALL SHALL BE MIN 1/2 IN. TO MAX 3/4 IN. SEE PIPE AND EQUIPMENT COVERING – MATERIALS (BRGU) CATEGORY IN BUILDING MATERIALS DIRECTORY FOR NAMES OF MANUFACTURERS. ANY PIPE COVERING MATERIAL MEETING THE ABOVE SPECIFICATIONS AND BEARING THE UL CLASSIFICATION MARKING WITH A FLAME SPREAD INDEX OF 25 OR LESS AND A SMOKE DEVELOPED INDEX OF 50 OR LESS MAY BE USED. THE HOURLY T RATING OF THE FIRESTOP SYSTEM IS 3/4 HR WHEN NOM 1 IN. THICK PIPE COVERING IS USED.THE HOURLY T RATING OF THE FIRESTOP SYSTEM IS 1 HR AND 1-1/2 HR WHEN NOM 2 IN. THICK PIPE COVERING IS USED WITH 1 HR AND 2 HR FIRE RATED WALLS, RESPECTIVELY.
4. FIRESTOP SYSTEM – INSTALLED SYMMETRICALLY ON BOTH SIDES OF WALL ASSEMBLY. THE DETAILS OF THE FIRESTOP SYSTEM SHALL BE AS FOLLOWS:
   A. FILL,VOID OR CAVITY MATERIALS* – WRAP STRIP – NOM 1/4 IN. THICK INTUMESCENT ELASTOMERIC MATERIAL FACED ON ONE SIDE WITH ALUMINUM FOIL, SUPPLIED IN 2 IN. WIDE STRIPS. NOM 2 IN. WIDE STRIP TIGHTLY WRAPPED AROUND PIPE COVERING (FOIL SIDE OUT) WITH SEAM BUTTED. WRAP STRIP LAYER SECURELY BOUND WITH STEEL WIRE OR ALUMINUM FOIL TAPE AND SLID INTO ANNULAR SPACE APPROX 1-1/4 IN. SUCH THAT APPROX 3/4 IN. OF THE WRAP STRIP WIDTH PROTRUDES FROM THE WALL SURFACE. ONE LAYER OF WRAP STRIP IS REQUIRED WHEN NOM 1 IN. THICK PIPE COVERING IS USED. TWO LAYERS OF WRAP STRIP ARE REQUIRED WHEN NOM 2 IN. THICK PIPE COVERING IS USED.
   B. FILL,VOID OR CAVITY MATERIALS* – CAULK – MIN 1/4 IN. DIAM CONTINUOUS BEAD APPLIED TO THE WRAP STRIP/WALL INTERFACE AND TO THE EXPOSED EDGE OF THE WRAP STRIP LAYER APPROX 3/4 IN. FROM THE WALL SURFACE.

**INSULATED PIPE**

# SYSTEM NO. W-L-1003

F RATINGS-- 1 AND 2 HR (SEE ITEM 1)
T RATING--0 HR

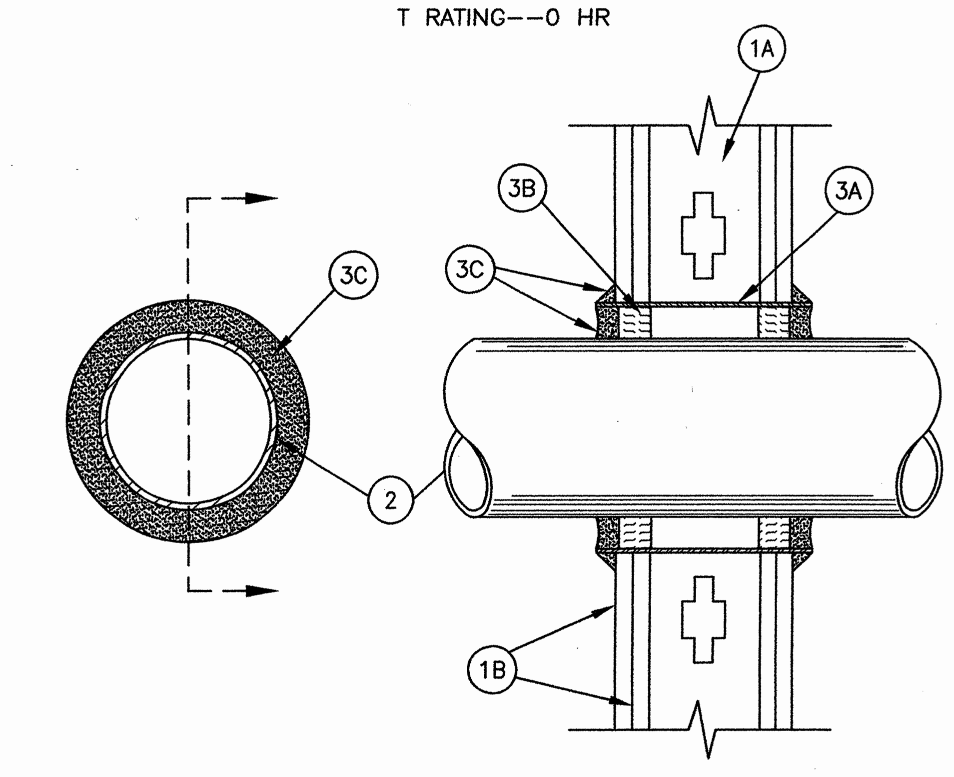


1. WALL ASSEMBLY – THE 1 OR 2 HR FIRE-RATED GYPSUM WALLBOARD/STUD WALL ASSEMBLY SHALL BE CONSTRUCTED OF THE MATERIALS AND IN THE MANNER DESCRIBED IN THE INDIVIDUAL U300 OR U400 SERIES WALL OR PARTITION DESIGN IN THE UL FIRE RESISTANCE DIRECTORY AND SHALL INCLUDE THE FOLLOWING CONSTRUCTION FEATURES:
   A. STUDS – WALL FRAMING MAY CONSIST OF EITHER WOOD STUDS OR STEEL CHANNEL STUDS. WOOD STUDS TO CONSIST OF NOM 2 BY 4 IN. LUMBER SPACED 16 IN. OC WITH NOM 2 BY 4 IN. LUMBER END PLATES AND CROSS BRACES. STEEL STUDS TO BE MIN 3-1/2 IN. WIDE BY 1-3/8 IN. DEEP CHANNELS SPACED MAX 24 IN. OC.
   B. GYPSUM BOARD* – NOM 5/8 IN. THICK, 4 FT. WIDE WITH SQUARE OR TAPERED EDGES. THE GYPSUM WALLBOARD TYPE, THICKNESS, NUMBER OF LAYERS, FASTENER TYPE AND SHEET ORIENTATION SHALL BE AS SPECIFIED IN THE INDIVIDUAL U300 OR U400 SERIES DESIGN IN THE UL FIRE RESISTANCE DIRECTORY. MAX DIAM OF OPENING IS 15 IN. THE HOURLY F RATING OF THE FIRESTOP SYSTEM IS EQUAL TO THE HOURLY FIRE RATING OF THE WALL ASSEMBLY IN WHICH IT IS INSTALLED.
2, THROUGH PENETRANT – ONE METALLIC PIPE, CONDUIT OR TUBING TO BE INSTALLED EITHER CONCENTRICALLY OR ECCENTRICALLY WITHIN THE FIRESTOP SYSTEM. THE SPACE BETWEEN PIPES, CONDUITS OR TUBING AND THE STEEL SLEEVE (ITEM 3A) SHALL BE MIN OF 0 IN. (POINT CONTACT) TO MAX 2-3/8 IN. PIPE, CONDUIT OR TUBING TO BE RIGIDLY SUPPORTED ON BOTH SIDES OF WALL ASSEMBLY. THE FOLLOWING TYPES AND SIZES OF METALLIC PIPES, CONDUITS OR TUBING MAY BE USED:
   A. STEEL PIPE – NOM 12 IN. DIAM (OR SMALLER) SCHEDULE 10 (OR HEAVIER) STEEL PIPE.
   B. IRON PIPE – NOM 12 IN. DIAM (OR SMALLER) SERVICE WEIGHT (OR HEAVIER) CAST IRON SOIL PIPE, NOM 12 IN. DIAM (OR SMALLER) OR CLASS 50 (OR HEAVIER) DUCTILE IRON PRESSURE PIPE.
   C. CONDUIT – NOM 6 IN. DIAM (OR SMALLER) STEEL CONDUIT OR NOM 4 IN. DIAM (OR SMALLER) STEEL ELECTRICAL METALLIC TUBING.
   D. COPPER TUBING – NOM 6 IN. DIAM (OR SMALLER) TYPE L (OR HEAVIER) COPPER TUBING.
   E. COPPER PIPE – NOM 6 IN. DIAM (OR SMALLER) REGULAR (OR HEAVIER) COPPER PIPE.
3. FIRESTOP SYSTEM – INSTALLED SYMMETRICALLY ON BOTH SIDES OF WALL ASSEMBLY. THE DETAILS OF THE FIRESTOP SYSTEM SHALL BE AS FOLLOWS.
   A. STEEL SLEEVE – CYLINDRICAL SLEEVE FABRICATED FROM MIN 0.019 IN. THICK (NO. 28 GAUGE) GALV SHEET STEEL AND HAVING A MIN 2 IN. LAP ALONG THE LONGITUDINAL SEAM. LENGTH OF STEEL SLEEVE TO BE EQUAL TO THICKNESS OF WALL PLUS 1 TO 4 IN. SUCH THAT, WHEN INSTALLED, THE ENDS OF THE SLEEVE WILL PROJECT APPROXIMATELY 1/2 TO 2 IN. BEYOND THE SURFACE OF THE WALL ON BOTH SIDES OF THE WALL ASSEMBLY. SLEEVE INSTALLED BY COILING THE SHEET STEEL TO A DIAM SMALLER THAN THE THROUGH OPENING, INSERTING THE COIL THROUGH THE OPENINGS AND RELEASING THE COIL TO LET IT UNCOIL AGAINST THE CIRCULAR CUTOUTS IN THE GYPSUM WALLBOARD LAYERS.
   B. PACKING MATERIAL – MIN 1 IN. THICKNESS OF MINERAL WOOL BATT INSULATION FIRMLY PACKED INTO STEEL SLEEVE ON BOTH SIDES OF THE WALL ASSEMBLY AS PERMANENT FORMS. PACKING MATERIAL TO BE RECESSED MIN 1/2 IN. FROM END OF STEEL SLEEVE (FLUSH WITH OR RECESSED INTO GYPSUM WALLBOARD SURFACE) ON BOTH SIDES OF WALL ASSEMBLY.
      1. PACKING MATERIAL – (NOT SHOWN) – AS AN ALTERNATE TO ITEM B, NOM 1 IN. THICK POLYETHYLENE BACKER ROD MAY BE USED. THE BACKER ROD IS TO BE RECESSED WITHIN THE STEEL SLEEVE A MIN OF 1 IN. FROM EACH SURFACE OF WALL.
   C. FILL,VOID OR CAVITY MATERIALS* – CAULK – WHEN MINERAL WOOL BATT INSULATION IS USED, APPLIED TO FILL THE STEEL SLEEVE TO A MIN DEPTH OF 1/2 IN. ON BOTH SIDES OF WALL ASSEMBLY. WHEN BACKER ROD IS USED, A MIN THICKNESS OF 1 IN. OF CP-25WB+ CAULK IS REQUIRED FLUSH WITH SURFACE OF WALL. A NOM 1/4 IN. DIAM CONTINUOUS BEAD OF CAULK SHALL BE APPLIED AROUND THE CIRCUMFERENCE OF THE STEEL SLEEVE AT ITS EGRESS FROM THE GYPSUM WALLBOARD LAYERS ON BOTH SIDES OF THE WALL ASSEMBLY.

   MINNESOTA MINING & MFG CO – CP 25WB+
   *BEARING THE UL CLASSIFICATION MARKING

**UNINSULATED PIPE**

**PIPE THRU 2 HOUR FIRE RATED WALL DETAIL**
NO SCALE

3 / M6.2

GENERAL NOTES: (APPLIES TO ALL DETAILS ON THIS PAGE)
1. FIRE RATED WALL DETAIL FOR REFERENCE ONLY.
2. EXACT WALL CONDITIONS AT PENETRATIONS SHALL BE VERIFIED PRIOR TO INSTALLATION AND THE APPROPRIATE RATING ASSEMBLY SHALL BE USED FOR THE TYPE OF PENETRATION.
3. FIRESTOPPING SHALL BE INSTALLED STRICTLY PER MANUFACTURER'S INSTALLATION INSTRUCTION'S.

tBP architecture planning interiors management
tBP/Architecture
1000 Burnett Avenue, Suite 140
Concord, CA 94520
p: 925.246.6419 f: 925.246.6495
architect

AINSWORTH ASSOCIATES
MECHANICAL ENGINEERS
SACRAMENTO, CA
consultant

name
address
city, state, zip
ph: fx:
agency

SCIENCE BUILDING
LOS MEDANOS COLLEGE
Contra Costa Community College District
owner

tBP project number : 20241.00
file name:
drawn by: checked by:
date: NOVEMBER 15, 2004
Rev: date: description:

drawing title:
**MECHANICAL - DETAILS**

LMC SCIENCE 313-023-112.01-0-00.00
drawing no.: **M6.2**
drawing of ?

U:\2003-003\DWGS\M6-2.dwg Time:Nov11,2004-03:49pm

# Bulletin No.03A

**Date:** 1/19/2006

**To:** S.J. Amoroso Construction
390 Bridge Parkway
Redwood shores CA 94065

**Project:** LOS MEDANOS COLLEGE SCIENCE BUILDING
Contra Costa Community College District
DSA No. 01-106226; File # 7-C1
tBP P/N 20247.00

tBP Architecture Planning Interiors Management

**Description:**

REFERENCE: Submittal #9, P0.1, P2-2, P1-2, P1-3, and P1-4

1. Clarification to specification for Lavatories L-1, L-2, L-3, and L-4 per attached revised Plumbing schedule SKP-03.1. Revisions as follows:
   a. L-4 added to Plumbing Fixture Schedule.
   b. L-1 description changed from Tri-basin to dual-basin.
   c. Rm 135, 136: L-1 changed to L-4 single basin.
   Note that quantities of lavatories are the same as original contract. Provide credit options as the changes from two dual-bowl lavs to single bowl lavs.
2. Clarification to facets required at Lavatories L-1, L-2, L-3 and L-4
   Provide Model "DMJ" Deck-mounted "J" spout.

**Issued By:** Architect

**Requested By:** Architect

**Reason:** Clarification to specification for Lavatories

**Enclosures:** SKP-03.1

**Distribution:**

| Copies: | Name: | Organization: |
|---|---|---|
| 1 copy | Mark Delgado | S. J. Amoroso |
| 1 copy | Cam Perrotta | CCCCDistrict |
| 1 copy | Bob Harke | Inspector of Record |
| 1 copy | Tom Beckett | tBP/Architecture |
| 1 copy | File 20247.00/7.4 | tBP/Architecture |

**Action:**
- ☐ For Information/Clarification only
- ☒ Provide Price/Credit Proposal. (Refer to this Bulletin No. when responding)
- ☐ Requires DSA review and approval
- ☐ Proceed as authorized by District

cc: DOWDLE ✓

tBP/Architecture. 1000 Burnett Ave. Suite 140 . Concord, CA. 94520. ph: 925.246.6419. fax: 925.246.6495

---

BULLETIN: #03A
DSA FILE # 7-C1
DSA APPL.# 01-106226

NOTES:

1. LOCATE LAVS AS FOLLOWS:
   - LAVATORY L-1 TO BE PROVIDED WITHIN ROOM 212
   - LAVATORY L-2 TO BE PROVIDED WITHIN ROOMS 110 & 212.
   - LAVATORY L-3 TO BE PROVIDED WITHIN ROOMS 109 & 211.
   - LAVATORY L-4 TO BE PROVIDED WITHIN ROOMS 135 & 136.
2. NOTE – QTY OF LAVS W/ IN ORIGINAL CONTRACT VS. BULLETIN ARE AS FOLLOWS:

| LAV# | QTY (ORIGINAL) | QTY (BULLETIN) |
|---|---|---|
| L-1 | 3 | 1 |
| L-2 | 2 | 2 |
| L-3 | 2 | 2 |
| L-4 | 0 | 2 |
| TOTAL | 7 | 7 |

3. SEE ARCHITECTURAL AND PLUMBING FLOOR PLANS FOR EXACT LOCATIONS.

| PLUMBING FIXTURE SCHEDULE | |
|---|---|
| L-1 | LAVATORY: [WALL MOUNT/STAINLESS STEEL/DUAL-BASIN/HARD WIRED SENSOR FAUCET/ADA]: "ACORN" MERIDIAN STAINLESS STEEL CURVED FRONT TWO-PERSON WASHBASIN, MODEL NUMBER 3702-1. PROVIDE WITH THE FOLLOWING OPTIONS:<br>- SO SENSOR FAUCET OPERATION – HARD WIRED<br>- EB ENCLOSED BOTTOM<br>- MXT HOT AND COLD THERMOSTATIC MIXING VALVE<br>- PDM PUMP TYPE SOAP DISPENSER |
| L-2 | LAVATORY: [WALL MOUNT/STAINLESS STEEL/TRI-BASIN/HARD-WIRED SENSOR FAUCET/ADA]: "ACORN" MERIDIAN STAINLESS STEEL CURVED FRONT THREE-PERSON WASHBASIN, MODEL NUMBER 3703-1. PROVIDE WITH THE FOLLOWING OPTIONS:<br>- SO SENSOR FAUCET OPERATION – HARD WIRED<br>- EB ENCLOSED BOTTOM<br>- MXT HOT AND COLD THERMOSTATIC MIXING VALVE<br>- PDM PUMP TYPE SOAP DISPENSER |
| L-3 | LAVATORY: [WALL MOUNT/STAINLESS STEEL/QUAD-BASIN/HARD-WIRED SENSOR FAUCET/ADA]: "ACORN" MERIDIAN STAINLESS STEEL CURVED FRONT FOUR-PERSON WASHBASIN, MODEL NUMBER 3704-1. PROVIDE WITH THE FOLLOWING OPTIONS:<br>- SO SENSOR FAUCET OPERATION – HARD WIRED<br>- EB ENCLOSED BOTTOM<br>- MXT HOT AND COLD THERMOSTATIC MIXING VALVE<br>- PDM PUMP TYPE SOAP DISPENSER |
| L-4 | LAVATORY: [WALL MOUNT/STAINLESS STEEL/SINGLE-BASIN/HARD-WIRED SENSOR FAUCET/ADA]: "ACORN" MERIDIAN STAINLESS STEEL CURVED FRONT ONE-PERSON WASHBASIN, MODEL NUMBER 3701-1. PROVIDE WITH THE FOLLOWING OPTIONS:<br>- SO SENSOR FAUCET OPERATION – HARD WIRED<br>- EB ENCLOSED BOTTOM<br>- MXT HOT AND COLD THERMOSTATIC MIXING VALVE<br>- PDM PUMP TYPE SOAP DISPENSER |

SCIENCE BUILDING
LOS MEDANOS COLLEGE
Pittsburg CA
Contra Costa Community College School District

ARCHITECT
tBP/Architecture
1000 Burnett Ave, Suite 140
Concord, CA 94520
p: 925.246.6419 f: 925.246.6495

architecture planning interiors management

AINSWORTH ASSOCIATES
MECHANICAL ENGINEERS
JOB: 2003-003

BULLETIN: #03A
DATE: 01/19/06
DSA NO. 01-106226
THIS REVISES IN PART SHEET: P0.1
SHEET: SKP-03.1

---

# Bulletin No.03B

**Date:** January 4, 2006

**To:** S.J. Amoroso Construction
390 Bridge Parkway
Redwood shores CA 94065

**Project:** LOS MEDANOS COLLEGE SCIENCE BUILDING
Contra Costa Community College District
DSA No. 01-106226; File # 7-C1
tBP P/N 20247.00

tBP Architecture Planning Interiors Management

**Description:**

REFERENCE: Plumbing drawings P1.1, P2.1;

Provide surface mounted hose bibs at all restrooms Chicago Faucets Wall-mounted Inside Sill Faucet #293. Locate under lavatory counter.

Provide formal submittal upon approval of PCO.

**Issued By:** Architect

**Requested By:** Owner

**Reason:** Owner request hose bibs

**Enclosures:** Cut sheet

**Distribution:**

| Copies: | Name: | Organization: |
|---|---|---|
| 1 copy | Mark Delgado | S. J. Amoroso |
| 1 copy | Cam Perrotta | CCCCDistrict |
| 1 copy | Bob Harke | Inspector of Record |
| 1 copy | Tom Beckett | tBP/Architecture |
| 1 copy | File 20247.00/7.4 | tBP/Architecture |

**Action:**
- ☐ For Information/Clarification only
- ☒ Provide Price/Credit Proposal. (Refer to this Bulletin No. when responding)
- ☐ Requires DSA review and approval
- ☐ Proceed as authorized by District

tBP/Architecture. 1000 Burnett Ave. Suite 140 . Concord, CA. 94520. ph: 925.246.6419. fax: 925.246.6495

---

CHICAGO FAUCETS
Last As Long As The Building
2100 SOUTH CLEARWATER DRIVE
DES PLAINES, ILLINOIS 60018-5999

FITTING NO. 293
SUBMITTED MODEL NO.

JOB NAME | ITEM NO.

SUBMITTED AS SHOWN
SUBMITTED AS NOTED
SEE ATTACHED FOR SUBMITTED MODIFICATION

NOTE:
INSTALLATION OF THIS FITTING SHOULD CONFORM TO LOCAL PLUMBING CODE REQUIREMENTS FOR BACKFLOW PREVENTION. (E27 VACUUM BREAKER OR EQUIVALENT)

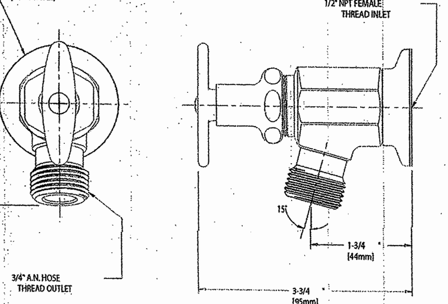


ROUGHING IN DIMENSIONS MAY VARY AND ARE SUBJECT TO CHANGE. NO RESPONSIBILITY IS ASSUMED FOR USE OF SUPERCEDED OR VOIDED DATA.

DIMENSIONS IN INCHES AND [MILLIMETERS].

TECHNICAL DATA
- WALL MOUNTED INSIDE SILL FAUCET
- 293-006 REMOVABLE TEE HANDLE
- SLOW COMPRESSION CARTRIDGE
- FINISH: CHROME PLATE
- 3/4" HOSE THREAD OUTLET
- ASME A112.18.1M COMPLIANT
- CSA B125 COMPLIANT

DATE: 05-24-02
BY: SID
CHK'D:
APP'D:
REV: B
293

---

## S. J. AMOROSO
**Request For Information/Clarification**

**DSA FILE NO. 7-C1**
**DSA APPL. No. 01-106226**

**To:** tBP/Architecture
1000 Burnett Ave, Suite 140
Concord, CA 94520

**Project:** LOS MEDANOS COLLEGE SCIENCE BUILDING
Contra Costa Community College District

**Attn:** Celia Chiang, Tom Beckett
**Fax:** 925-246-6495

tBP p/n: 20247.00

**Subj.:** American Standard Instanto Water Closet

**RFI No:** 426
Subcontractor RFI: Dowdle 72

**Reference (dwg, spec.): P0.1**

**Reply Requested By: 11/17/06**

**INFORMATION REQUESTED:** **Date:** 11/10/06

Please note the attached Dowdle RFI No. 72 regarding the approved Kohler 4450 for WC 1 and 2 which is no longer available. Is it acceptable to substitute American Standard "Instanto" Water Closet in place of the Kohler 4450. Please advise.

**SUGGESTED SOLUTION:**
**Cost Impact:** ☐ **Schedule Impact:** ☐ days **By:** Mark Delgado

**RESPONSE:** **DATE:**

The American Standard "Instanto" is acceptable.

Jim Weaver / tBP Architecture
D. W. / Ainsworth Associates

11/28/06

1

**RFI # 000**
**Page 1**

---

Dowdle & Sons Mechanical, Inc.
P.O. Box 3316
Napa, CA 94558
(707)224-6988

**RFI**

**To:** Mark Delgado
SJ Amoroso
390 Bridge Parkway
Redwood Shores, CA 94065
Ph: 925-427-7567 Fax: 925-427-7570

**RFI #:** 72
**Date:** 11/8/2006
**Job:** 437 Los Medanos College
**Phone:** 925-427-7567

**CC:**

**Subject:** WC 1 & 2 - Substitute American Standard in lieu of Kohler

**Drawing:** P0.1 **Spec Section:** 15440 2.04

**Cost Impact:** **Schedule Impact:**

**Request:** **Date Required:** 11/15/2006

Currently the availablity of the approved Kohler 4450 for WC 1 & 2 is in question. The current lead time is approximately 4 months. However Kohler is unwilling to commit to a delivery date due to casting problems. In light of the manufacturers difficulties, DSM would like to propose a substitution of the American Standard "Instanto" Water Closet, per Fixture Schedule P0.1 (Model 2512.010 - see attached Cut Sheet). The current lead time for this product is 6 weeks. DSM would like to release our purchase order for the Instanto to our vendor, immediately - to secure the quantities necessary.

**Requested by:** Staci Freeman
Dowdle & Sons Mechanical, Inc

**Response:**

Answered By:
Company Date

Page 1 of 1

---

*American Standard*
BARRIER FREE

**INSTANTO™ 3.5 GPF ELONGATED FLUSH VALVE TOILET**
VITREOUS CHINA

**INSTANTO™ ELONGATED 3.5 GPF TOILET**

- Vitreous china
- Wall-mounted elongated bowl
- Blowout flush action
- Fully-glazed 2-1/2" Ballpass trapway
- 1-1/2" inlet spud
- 100% factory flush tested

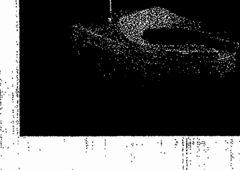

- ☒ 2512.010 Top spud
- ☐ 2511.012 Back spud
- ☐ 2513.018 Back spud with Integral Seat

Nominal Dimensions:
660x 356 x 457mm
(26" x 14" x 15")

Recommended working pressure--between 25 psi at valve when flushing and 80 psi static

Fixture only, less seat and bolt caps

**Compliance Certifications -**
**Meets or Exceeds the Following Specifications:**
- ASME A112.19.2M (and 19.6M) for Vitreous China Fixtures - Includes Flush Performance, Ball Pass Diameter, Trap Seal Depth and all Dimensions

To Be Specified
- ☐ Color: ☐ White
- ☐ Seat: Olsonite #95 open front seat less cover
- ☐ Seat: Church #9500C open front seat less cover
- ☐ Seat: Pressalit seats for American Standard, open front seat with/without cover (thermoset compound material). See page TBU-002 through TBU-005.
- ☐ Alternative Seat:
- ☐ Flush Valve: Sloan Royal #110-3 (top spud) Sloan Royal #144-3 (back spud)
- ☐ Alternate Flush Valve:
- ☐ Carrier Fitting (by others):

**NOTES:** Roughing-in information shown on reverse side of page.

Blowout water closets are exempt from the 1.6 gallon per flush requirements of the National Energy Policy Act. However, some state and local codes do not allow the use of 3.5 gallons per flush toilets. Check local codes.

SHOP DRAWING ACTION:
- No exceptions taken ☒
- Make corrections noted ☐
- Rejected ☐
- Resubmit as specified ☐
- Amend and resubmit ☐

Checking is only for conformance with design concept of Project. Materials offered subject to conformance with Contract Documents. Contractor responsible for: errors, dimensions or omissions in submittal; quantities; dimensions to be confirmed and correlated at job site; information pertaining solely to fabrication processes or to techniques of construction, coordination of work of other trades.

AINSWORTH ASSOCIATES By: SA☐ DA☐ WD☐ JP☐ DW☒ __☐
Date 11/27/06

When installed so top of seat is 432 to 483mm (17" to 19") from the finished floor. MEETS THE AMERICAN DISABILITIES ACT GUIDELINES AND ANSI A117.1 REQUIREMENTS FOR ACCESSIBLE AND USEABLE BUILDING FACILITIES - CHECK LOCAL CODES.

© 2003 American Standard Inc. CI-9 Revised 5/03

---

*American Standard*

**INSTANTO™ 3.5 GPF ELONGATED FLUSH VALVE TOILET**
VITREOUS CHINA

2512.010 2511.012

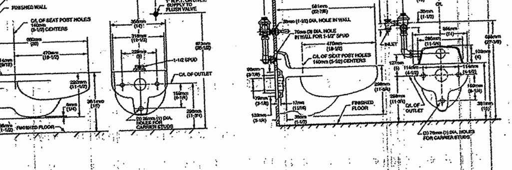

NOTES:
WASTE OUTLET SEAL RING MUST BE NEOPRENE OR GRAPHITE-FELT (WAX RING NOT RECOMMENDED).
TO COMPLY WITH AREA CODE GOVERNING THE HEIGHT OF VACUUM BREAKER ON FLUSH VALVE, THE PLUMBER MUST VERIFY DIMENSIONS SHOWN FOR SUPPLY ROUGHING.
SUGGEST 1/16" CLEARANCE BETWEEN FACE OF WALL AND BACK OF BOWL.
METHOD AND MEANS OF SUPPORT TO BE FIGURED AND FURNISHED BY OTHERS.
FLUSH VALVE NOT INCLUDED WITH FIXTURE AND MUST BE ORDERED SEPARATELY.
PLUMBER NOTE: PROVIDE SUITABLE REINFORCEMENT FOR ALL SUPPORTS.
IMPORTANT: Dimensions of fixtures are nominal and may vary within the range of tolerances established by ANSI Standard A112.19.2.
These measurements are subject to change or cancellation. No responsibility is assumed for use of superseded or voided pages.

© 2003 American Standard Inc. CI-10