PIPING POINT OF CONNECTION SCHEDULE

ROOM NAME	ROOM NO.	POC NO.	TW	ICW	IHW	DI	LG	LA	LV
ANATOMY LAB	132	1.1	1 1/2	3/4	3/4	–	–	–	–
MAJORS BIOLOGY LAB	143	1.2	1 1/2	1	3/4	3/4	3/4	–	3/4
ANATOMY LAB	132	1.3	3/4	3/4	3/4	–	–	–	–
MAJORS BIOLOGY LAB	143	1.4	3/4	1	3/4	–	3/4	–	–
PREP/STOCK RM	144	1.5	1 1/2	3/4	3/4	3/4	3/4	–	3/4
MICRO PHYSIOLOGY LAB	129	1.6	1 1/2	3/4	3/4	3/4	1	–	3/4
GENERAL BIOLOGY LAB	148	1.7	1 1/2	3/4	3/4	3/4	3/4	–	3/4
MICRO PHYSIOLOGY LAB	129	1.8	3/4	3/4	3/4	3/4	–	–	–
GENERAL BIOLOGY LAB	148	1.9	–	3/4	3/4		3/4	–	3/4
MICRO PREP/STOCK ROOM	125	1.10	1 1/2	2	1	3/4	3/4	–	3/4
PREP/STOCK RM CHEMISTRY	236	2.1	1 1/2	3/4	3/4	3/4	3/4	3/4	3/4
GENERAL CHEMISTRY LAB	242	2.2	1 1/2	2	3/4	3/4	1	1 1/4	2
ORGANIC CHEMISTRY LAB	235	2.3	1 1/2	2	3/4	3/4	1	1	1 1/2
INSTRUMENT ROOM	233	2.4	1 1/2	–	–	–	–	–	–
STRENGTH & ENGINEERING LAB	245	2.4A	3/4	3/4	3/4	–	–	–	–
PHYSICAL SCIENCES PREP/STOCK RM	246	2.5	–	3/4	3/4	–	–	–	3/4
PHYSICS LAB	249	2.6	–	3/4	3/4	–	–	–	1
PHYSICS LAB	249	2.7	–	3/4	3/4	–	–	–	1

NOTES:
1. PROVIDE REDUCER AS REQUIRED DOWNSTREAM OF SHUT OF VALVE FOR CONNECTION TO PIPING BY LABORATORY CONTRATORS.
2. SEE LABRATORY CONSULTANT DRAWINGS (LP-SERIES) FOR POC CONTINUATION.

MAXIMUM FIXTURE UNIT LOADING FOR WATER PIPE

NOMINAL PIPE SIZE (INCHES)	3/4"	1"	1 1/4"	1 1/2"	2"	2 1/2"	3"	4"	6"
FIXTURE UNITS (WITHOUT FLUSH VALVES)	6	10	21	34	127	245	431	875	3150
FIXTURE UNITS (WITH ONE OR MORE FLUSH VALVES.)	–	5	10	20	48	124	295	850	3150

NOTES:
1. USE ABOVE DATA ONLY WHEN PIPE SIZES ARE NOT OTHERWISE SIZED ON THE DRAWINGS.
2. FIXTURE UNITS ARE AS LISTED FOR PUBLIC USE IN UNIFORM PLUMBING CODE.

PLUMBING FIXTURE CONNECTION SCHEDULE

FIXTURE	SYMBOL	WASTE		VENT	COLD WATER		HOT WATER	
		BRANCH	OUTLET		BRANCH	OUTLET	BRANCH	OUTLET
WATER CLOSET	WC	4"	4"	2"	1 1/4"	1"	–	–
URINAL	UR	2"	2"	1 1/2"	1"	3/4"	–	–
LAVATORY	L	2"	1 1/2"	1 1/2"	3/4"	1/2"	3/4"	1/2"
ELECTRIC WATER COOLER	EWC	2"	1 1/2"	1 1/2"	3/4"	1/2"	–	–
MOP SINK	MS	3"	3"	2"	3/4"	1/2"	3/4"	1/2"
FLOOR SINK	FS	2"	2"	1 1/2"	–	–	–	–
SINK	S	2"	1 1/2"	1 1/2"	3/4"	1/2"	3/4"	1/2"
FLOOR DRAIN	FD	2"	2"	1 1/2"	–	–	–	–
HOSE BIBB/WALL HYDRANT	HB/WH	–	–	–	3/4"	3/4"	–	–

NOTES:
1. WATER BRANCH LINES WHERE LESS THAN 10'-0" LONG MAY BE SAME SIZE AS OUTLETS SCHEDULED ABOVE.

PLUMBING FIXTURE SCHEDULE

RFI 42b

WC-1 — WATER CLOSET: [WALL MOUNT/SENSOR FLUSH VALVE/ADA]
AMERICAN STANDARD "INSTANTO 3.5" 2512.010 WALL MOUNTED WATER CLOSET WITH BLOWOUT FLUSH ACTION. COMPLETE WITH OLSONITE MODEL 10CC-SS OFF WHITE SEAT AND SLOAN ROYAL 110-ES-S SENSOR OPERATED FLUSHOMETER. PROVIDE ONE EL-154 TRANSFORMER PER RESTROOM. MOUNT FLUSH VALVE ON WIDE SIDE OF ENCLOSURE.

WC-2 — WATER CLOSET: [WALL MOUNT/SENSOR FLUSH VALVE/STANDARD HEIGHT]
AMERICAN STANDARD "INSTANTO 3.5" 2512.010 WALL MOUNTED WATER CLOSET WITH BLOWOUT FLUSH ACTION. COMPLETE WITH OLSONITE MODEL 10CC-SS OFF WHITE SEAT AND SLOAN ROYAL 110-ES-S SENSOR OPERATED FLUSHOMETER. CONNECT TO TRANSFORMER PROVIDED BY WC-1.

UR-1 — URINAL: [WALL MOUNT/SENSOR FLUSH VALVE/ADA]
AMERICAN STANDARD "MAYBROOK" MODEL 6581.015 WALL MOUNTED URINAL, COMPLETE WITH SLOAN ROYAL 186-1-ES-S SENSOR OPERATED FLUSHMETER. CONNECT TO TRANSFORMER PROVIDED BY WC-1.

SEE BULLETIN 3 AND PLANS

L-1 — LAVATORY: [WALL MOUNT/STAINLESS STEEL/TRI-BASIN/HARD WIRED SENSOR FAUCET/ADA]:
"ACORN" MERIDIAN STAINLESS STEEL CURVED FRONT THREE-PERSON WASHBASIN, MODEL NUMBER 3703-1. PROVIDE WITH THE FOLLOWING OPTIONS:
- SO SENSOR FAUCET OPERATION – HARD WIRED
- EB ENCLOSED BOTTOM
- MXT HOT AND COLD THERMOSTATIC MIXING VALVE
- PDM PUMP TYPE SOAP DISPENSER

L-2 — LAVATORY: [WALL MOUNT/STAINLESS STEEL/TRI-BASIN/HARD-WIRED SENSOR FAUCET/ADA]:
"ACORN" MERIDIAN STAINLESS STEEL CURVED FRONT THREE-PERSON WASHBASIN, MODEL NUMBER 3703-1. PROVIDE WITH THE FOLLOWING OPTIONS:
- SO SENSOR FAUCET OPERATION – HARD WIRED
- EB ENCLOSED BOTTOM
- MXT HOT AND COLD THERMOSTATIC MIXING VALVE
- PDM PUMP TYPE SOAP DISPENSER

L-3 — LAVATORY: [WALL MOUNT/STAINLESS STEEL/QUAD-BASIN/HARD-WIRED SENSOR FAUCET/ADA]:
"ACORN" MERIDIAN STAINLESS STEEL CURVED FRONT FOUR-PERSON WASHBASIN, MODEL NUMBER 3704-1. PROVIDE WITH THE FOLLOWING OPTIONS:
- SO SENSOR FAUCET OPERATION – HARD WIRED
- EB ENCLOSED BOTTOM
- MXT HOT AND COLD THERMOSTATIC MIXING VALVE
- PDM PUMP TYPE SOAP DISPENSER

MS-1 — MOP SINK: [COURNER MOUNT/CAST IRON/H&CW]
KOHLER "WHITBY" K6710 CAST IRON MOP SINK WITH K8940 COATED WIRE RIM GUARD. COMPLETE WITH CHICAGO NO. 897 FAUCET WITH VACUUM BREAKER, WALL SUPPORT AND INTEGRAL STOPS IN SHANKS. PROVIDE 5-FOOT HOSE AND HOSE BRACKET MOUNTED TO WALL WITH STAINLESS STEEL SCREWS AND BLOCKING. MOUNT FAUCET AT +36 INCHES.

DF-1 — DRINKING FOUNTAIN: [WALL MOUNT/ADA/DOUBLE BUBBLER]
HAWS MODEL 1011 DISABLED-ACCESSIBLE HIGH/LOW DRINKING FOUNTAIN, SATIN FINISH, COMPLETE WITH VANDAL-RESISTANT STAINLESS STEEL BOTTOM PLATE, HEAVY DUTY MOUNTING PLATE, AND VANDAL-RESISTANT PIN ON BUBBLERS. MOUNT UNIT WITH BUBBLER AT HEIGHT AS INDICATED ON ARCHITECTURAL DRAWINGS.

S-1 — SINK: [DOUBLE SS SINK/ADA/H&CW/ W/ INSTA-HOT & GARBAGE DISPOSER]
JUST MODEL DL-ADA-1829-A-GR, 18 GAUGE, SELF-RIMMING CONSTRUCTION, THREE HOLE PUNCH, DOUBLE STAINLESS STEEL SINK AT A DEPTH OF 6 1/2". PROVIDE J-ADA-35 STAINLESS STEEL CUP STRAINER WITH OFFSET AND 1 1/4" TAILPIECE. PROVIDE WITH CHICAGO MODEL 1100 FAUCET MODIFIED WITH A GN2A GOOSENECK SPOUT AND PROVIDE IN-SINK-ERATOR MODEL 77 DISPOSER, MOUNT ON/OFF SWITCH ON WALL. INSULATE HOT AND COLD WATER AND DRAIN PIPING EXPOSED BELOW LAVATORY WITH "TRUEBRO" LAV GUARD PROTECTIVE PIPE COVERS.

S-2 — SINK: [SS DEEP SINK/H&CW]
JUST MODEL SLX-1921-A-GR, 18 GAUGE, SELF-RIMMING CONSTRUCTION, SINGLE HOLE PUNCH, STAINLESS STEEL SINK AT A DEPTH OF 10-1/2". PROVIDE J-35-FS STAINLESS STEEL FLAT STRAINER AND 1 1/4" TAILPIECE. PROVIDE WITH CHICAGO MODEL 50 FAUCET.

S-3 — SINK – [SINK/TRIM BY OTHERS, SEE LABRATORY DRAWINGS]
ROUGH IN AND CONNECT ONLY.

S-4 — SINK: [SS SINK/ADA/H&CW]
JUST MODEL SL-ADA-1921-A-GR, 18 GAUGE, SELF-RIMMING CONSTRUCTION, SINGLE HOLE PUNCH, STAINLESS STEEL SINK AT A DEPTH OF 6 1/2". PROVIDE J-ADA-35-FS STAINLESS STEEL FLAT STRAINER WITH OFFSET AND 1 1/4" TAILPIECE. PROVIDE WITH CHICAGO MODEL 50 FAUCET. INSULATE HOT AND COLD WATER AND DRAIN PIPING EXPOSED BELOW LAVATORY WITH "TRUEBRO" LAV GUARD PROTECTIVE PIPE COVERS.

CS — CUP SINK – [SINK/TRIM BY OTHERS, SEE LABORATORY DRAWINGS]
ROUGH IN AND CONNECT ONLY.

EW/SS-1 — EYEWASH / SAFETY SHOWER – [SEE LABRATORY DRAWINGS]
ROUGH IN AND CONNECT ONLY.

TD-1 — TRENCH DRAIN – ZURN ZN-664-ES WITH TWO 12" EXTENSION SECTIONS.

EQUIPMENT LIST

DWH-1 / WH-1 — DOMESTIC WATER HEATER / INDUSTRIAL WATER HEATER: "AO SMITH" GLASS LINED CONSERVATIONIST COMMERCIAL GAS WATER HEATER MODEL BTP-150-140 OR EQUAL. TANK SHALL HAVE A CAPACITY OF 150 GALLONS WITH A RECOVERY RATE OF 170 GPH AT 40° F-120°F. HEATER WILL HAVE AN INPUT RATING OF 140,000 BTUH, WITH 1/7 HP, 120V, 60 Hz, 1ø MOTOR. APPROXIMATE WEIGHT = 2555 LBS.

CP-1 / CP-2 — CIRCULATION PUMP: "BELL & GOSSET" MODEL SNRF-22 MAINTENANCE-FREE CAST IRON WET ROTOR CIRCULATING PUMP FOR DOMESTIC HOT WATER LOOP. FLANGE SIZE 3/4", 2 GPM @ 14 FT. HD., 115V., 0.80 AMPS, 92 WATTS, 1/25 HP. APPROXIMATE UNIT WEIGHT = 10 LBS.

GPR-1 — GAS PRESSURE REDUCING VALVE: "FISHER" MODEL S102, 5 PSI INLET, 11" WC OUTLET, 1 1/2" BODY, 5/16" SEAT RING, 775 CFH CAPACITY.

AIRC-1 — AIR COMPRESSOR: "INGERSOLL-RAND" MODEL T30-0L15A15 OILLESS RECIPROCATING AIR COMPRESSOR COMPLETE WITH DRYER AND FILTERS. SYSTEM SHALL BE CABABLE OF PRODUCING 49 CFM AT 100 PSIG. SYSTEM COMPONENTS TO INCLUDE ONE 15-HP AIR COOLED PUMP, ELECTRICAL CONTROL PANEL WITH NEMA 1 ENCLOSURE, STARTER, INLET PRE-FILTER (MODEL IRGP64) AND HIGH EFFICIENCY FILTER (MODEL IRHE64) , AIRCOOLED AFTERCOOLER, AND MODEL DS50 REFRIGERATED DRYER. SYSTEM TO BE ONE 15-HP PUMP, 240 GALLON RECEIVER TANK, 460V/3ø/60 Hz, 20 AMPS. APPROXIMATE UNIT WEIGHT = 1500 LBS.

VP-1 — VACUUM PUMP: "RIETSCHLE" MODEL VCTS-040-121 TANK MOUNTED ROTARY VANE VACUUM PUMP SYSTEM. SYSTEM SHALL BE CABABLE OF PRODUCING 57 CFM VACUUM. SYSTEM COMPONENTS TO INCLUDE TWO 2-HP AIR COOLED RIETSCHLE HEAVY DUTY VACUUM PUMPS, ELECTRICAL CONTROL PANEL WITH NEMA 12 ENCLOSURE, MAGNETIC MOTOR STARTERS WITH OVERLOAD PROTECTION, PLC CONTROL VOLTAGE TRANSFORMER, MINIMUM RUN TIMER, H-O-A SWITCHES, HOUR METERS AND RUN PILOT LIGHTS, ASME CODED RECEIVER, CHECK VALVES, ISOLATION VALVES, FLEXIBLE CONNECTORS, VACUUM GAUGE, AND VACUUM SWITHCHES. SYSTEM TO BE COMPLETELY PRE-WIRED AND PRE-PIPED FOR SINGLE POINT ELECTRICAL AND VACUUM CONNECTIONS. SYSTEM TO BE (2) 2-HP PUMPS, 120 GALLON RECEIVER TANK, 460V/3ø/60 Hz. APPROXIMATE UNIT WEIGHT = 800 LBS.

DI-1 — DIONIZED WATER SYSTEM: "CULLIGAN" 14 INCH MIX BED PORTABLE EXCHANGE DEIONZER, WITH AQUAFINE ULTRAVIOLET LIGHT MODEL SL-1 AND PREFILTER.
RFI 2:13

NT-1 — NEUTRALIZING TANK: "ORION" STYLE 7, FIBERGLASS REINFORCED TANK WITH BOLTED TOP, 360 GALLON CAPACITY WITH 4,500 LBS OF LIMESTONE. INSTALL PER MANUFACTURER'S RECOMMENDATIONS. PROVIDE WITH "UTILITY VAULT" 5'x5' I.D. CONCRETE VAULT WITH ADJUSTABLE GALVANIZED TRAFFIC RATED COVER.

TMV-1 — THERMOSTATIC MIXING VALVE ARMSTRONG RADA MODEL 50.

PLUMBING LEGEND

	SOIL OR WASTE LINE BELOW GRADE
	SOIL OR WASTE LINE ABOVE GRADE
AW	LABRATORY WASTE
	COLD WATER LINE
ICW	INDUSTRIAL COLD WATER LINE
	HOT WATER LINE
IHW	INDUSTRIAL HOT WATER LINE
	HOT WATER RETURN LINE
G	GAS LINE
LG	LAB GAS LINE
LA	LAB AIR LINE
LV	LAB VACUUM LINE
CWS	CONDENSER WATER SUPPLY (SEE MECHANICAL DWGS.)
CWR	CONDENSER WATER RETURN (SEE MECHANICAL DWGS.)
CHWS	CHILLED WATER SUPPLY (SEE MECHANICAL DWGS.)
CHWR	CHILLED WATER RETURN (SEE MECHANICAL DWGS.)
	VENT LINE
AV	LABRATORY VENT
RWL	RAINWATER LEADER LINE
ORWL	OVERFLOW RAINWATER LEADER LINE
F	FIRE LINE
CWS	COOLING TOWER WATER SUPPLY
CWR	COOLING TOWER WATER RETURN
CHWS	CHILLED WATER SUPPLY
CHWR	CHILLED WATER RETURN
BLV.	BALL VALVE
BV.	BALANCE VALVE
CKV.	CHECK VALVE
C.V.	CHECK VALVE
LH.GC.	LEVER HANDLE GAS COCK
	THERMOMETER
	UNION
T & P	TEMPERATURE AND PRESSURE RELIEF LINE
ABC	ABOVE CEILING
UF	UNDER FLOOR
UC.	UNDER COUNTER
COTF	CLEANOUT TO FLOOR
COTG	CLEANOUT TO GRADE
CO., WCO.	CLEANOUT, WALL CLEANOUT
CW (D)(R)	COLD WATER (DROP) (RISER)
HW (D)(R)	HOT WATER (DROP) (RISER)
W, WD	WASTE, WASTE DROP
FS	FLOOR SINK
FA, TB	FROM ABOVE, TO BELOW
FB, TA	FROM BELOW, TO ABOVE
IE	INVERT ELEVATION
(E), (N)	EXISTING, NEW
V, VR, VTR	VENT, VENT RISER, VENT THRU ROOF
AV, AV.R, AVTR	ACID VENT, ACID VENT RISER, ACID VENT THRU ROOF
RD.	ROOF DRAIN
ORD.	OVERFLOW ROOF DRAIN
RWL	RAINWATER LEADER
ORWL	OVERFLOW RAINWATER LEADER
ø	DIAMETER
TYP.	TYPICAL
FD.	FLOOR DRAIN
F/L	FLOW LINE
P/L	PROPERTY LINE
DEM.	DEMAND
FU.	FIXTURE UNITS
GPM	GALLONS PER MINUTE
R.I.O.	ROUGH IN ONLY
UNO	UNLESS NOTED OTHERWISE
POC	POINT OF CONNECTION
NC.	NORMALLY CLOSED
O.C.	ON CENTER
AFF.	ABOVE FINISHED FLOOR
AFG.	ABOVE FINISHED GRADE
DD.	DECK DRAIN
CI	CAST IRON
CP	CHROMIUM PLATED
SS	STAINLESS STEEL
WH	WALL HYDRANT
ROOM NAME / --	ROOM NAME AND NUMBER

S. J. AMOROSO
Request For Information/Clarification

DSA FILE NO. 7-C1
DSA APPL. No. 01-106226

To: tBP/Architecture, 1000 Burnett Ave, Suite 140, Concord, CA 94520
Project: LOS MEDANOS COLLEGE SCIENCE BUILDING, Contra Costa Community College District
Attn: Celia Chiang, Tom Beckett
Fax: 925-246-6495
tBP p/n: 20247.00
Subj.: Floor Sink Set Height
RFI No: 185
Reference (dwg, spec.):
Subcontractor RFI: Dowdle 41
Reply Requested By: 3/16/06

INFORMATION REQUESTED: Date: 3/13/06

Please note the attached Dowdle RFI No. 41 regarding the floor sink set height. Per Greg Tower's, Dowdle's Foreman, conversation with David Weston the sinks are to be set flush with Finish Floor. Please confirm.

SUGGESTED SOLUTION:

Cost Impact: ☐ Schedule Impact: ☐ days By: Mark Delgado

RESPONSE: Floor sinks are to be set flush with Finish Floor. DATE: 3.13.06

Attachments:

By: C. Chiang/tBP

TRANSMITTAL RECORD:

FROM	TO	DATE
S.J. AMOROSO	tBP / ARCHITECTURE	3/13/06
tBP / ARCHITECTURE	ENGINEER/CONSULTANT	
ENGINEER/CONSULTANT	tBP / ARCHITECTURE	
tBP / ARCHITECTURE	S.J. AMOROSO	3.13.06
S.J. AMOROSO	ORIGINATOR	

RFI # 000
Page 1

WALL TYPES - (FOR REFERENCE ONLY. WALL TYPES ON ARCHITECTURAL DRAWINGS SHALL TAKE PRECEDENCE.)

1-HR FIRE RATED ASSEMBLY

2-HR FIRE RATED ASSEMBLY (AT CHEMICAL WASTE STORAGE ONLY)

1-HR FIRE RATED ASSEMBLY (OCCUPANCY SEPARATION)

STUD PARTITION
REFER TO SHEET A.02 FOR PARTITION TYPES

S. J. AMOROSO
Request For Information/Clarification

DSA FILE NO. 7-C1
DSA APPL. No. 01-106226

To: tBP/Architecture, 1000 Burnett Ave, Suite 140, Concord, CA 94520
Project: LOS MEDANOS COLLEGE SCIENCE BUILDING, Contra Costa Community College District
Attn: Celia Chiang, Tom Beckett
Fax: 925-246-6495
tBP p/n: 20247.00
Subj.: UV Sterilizer and Micron Filter at DI System
RFI No: 293
Reference (dwg, spec.):
Subcontractor RFI:
Reply Requested By: 7/24/06

INFORMATION REQUESTED: Date: 7/17/06

Please note the attached Dowdle and Sons RFI No. 53 regarding a Pre-Filter noted for the DI Water System/Aquafine Ultraviolet Sterilizer on the Plumbing equipment list. Please advise.

SUGGESTED SOLUTION:

Cost Impact: ☐ Schedule Impact: ☐ days By: Justin Warren

RESPONSE: DATE:

DI system to have the following:
1. Provide a 5 micron filter before UV light.
2. Provide a 0.1 Micron Filter downstream of light.
3. Also provide a fixed flow control valve set at 12 gpm between 5 micron filter and UV light.

Dave Weston/AAME - 8/01/06

RFI # 000
Page 1

Dowdle & Sons Mechanical, Inc.
P.O. Box 8018
Napa, Ca. 94559
Ph. (707)224-4668

RFI

To: Mark Delgado, SJ Amoros, 990 Bolger Parkway, Redwood Shores, CA. 94065, Ph. 925-427-7587 Fax: 925-427-7570
RFI #: 53, Date: 7/14/2006, Job: 427 Los Medanos College, Phone: 925-427-7587
CC:
Subject: UV Sterilizer and Micron Filter @ DI System
Drawing: P0.1, Spec Section: 15400
Cost Impact: Schedule Impact:

Request: Date Required: 7/25/2006
A Pre-Filter is noted w/ the DI Water System/Aquafine Ultraviolet Sterilizer on the Plumbing Equipment List. Please clarify the micron rating of the filter, the materials of construction and its nominal flow rate.

Requested By: Staci Freeman, Dowdle & Sons Mechanical, Inc

Response:

Answered By: Company: Date:

Page 1 of 1

AAME 8/1 77

S. J. AMOROSO
Request For Information/Clarification

DSA FILE NO. 7-C1
DSA APPL. No. 01-106226

To: tBP/Architecture, 1000 Burnett Ave, Suite 140, Concord, CA 94520
Project: LOS MEDANOS COLLEGE SCIENCE BUILDING, Contra Costa Community College District
Attn: Celia Chiang, Tom Beckett
Fax: 925-246-6495
tBP p/n: 20247.00
Subj.: Tempered Water Insulation
RFI No: 115
Reference (dwg, spec):
Subcontractor RFI#
Reply Requested By: 2/6/06

INFORMATION REQUESTED: Date: 1/31/06
Please note the attached Dowdle and Sons RFI No. 27 confirming that the tempered water does not require insulation. Please Confirm.
SUGGESTED SOLUTION:

Cost Impact: ☐ Schedule Impact: ☐ days By: Mark Delgado

RESPONSE: DATE:

Author: dsexton
Subject: RFI
Date: 2/6/2006 2:39:01 PM
Contract Documents do not require for tempered water to be insulated.

Attachments:

By:

TRANSMITTAL RECORD:

FROM	TO	DATE
S.J. AMOROSO	tBP / ARCHITECTURE	1/30/06
tBP / ARCHITECTURE	ENGINEER/CONSULTANT	
ENGINEER/CONSULTANT	tBP / ARCHITECTURE	
tBP / ARCHITECTURE	S.J. AMOROSO	
S.J. AMOROSO	ORIGINATOR	

RFI # 000
Page 1

tBP/Architecture
1000 Burnett Avenue, Suite 140
Concord, CA 94520
p: 925.246.6419 f: 925.246.6495

architect

AINSWORTH ASSOCIATES
MECHANICAL ENGINEERS
SACRAMENTO, CA

consultant

agency

owner

SCIENCE BUILDING
LOS MEDANOS COLLEGE
Contra Costa Community College District

tBP project number : 20241.00
file name:
drawn by: checked by:
date: NOVEMBER 15, 2004

Rev:	date:	description:

drawing title:
LEGENDS, SCHEDULES, EQUIPMENT LISTS, & NOTES

LMC SCIENCE 313-023-112.01-0-00.00
drawing no:
P0.1
drawing of ?

313-023-112.01-0-00.00

S. J. AMOROSO
Request For Information/Clarification

DSA FILE NO. 7-C1
DSA APPL. No. 01-106226

To: tBP/Architecture, 1000 Burnett Ave, Suite 140, Concord, CA 94520
Attn: Celia Chiang, Tom Beckett
Fax: 925-246-6495

Project: LOS MEDANOS COLLEGE SCIENCE BUILDING, Contra Costa Community College District
tBP ph#: 20247.00

Subj.: RFI No: **408**
Reference (dwg, spec.): P1.0
Subcontractor RFI: Dowdle 67

Reply Requested By: 11/2/06

INFORMATION REQUESTED: Date: 10/26/06

Per attached Dowdle RFI 67, there is no (E) 3" storm drain installed through the slab as shown. Please advise.

SUGGESTED SOLUTION:
Cost Impact: ☐ Schedule Impact: ☐ days By: Mark Delgado

RESPONSE: DATE:

Discharge (Spill) RWL to grade similar to ORWL.
See attached sketch SKM-408.1 for details.

Jim Weaver / tBP Architecture
Dave Weston / AAME

11/13/06

Dowdle & Sons Mechanical, Inc.
P.O. Box 5189
Napa, CA 94581
Ph: (707)224-6888

RFI

To: Mark Delgado, SJ Amoroso, 360 Bridge Parkway, Redwood Shores, CA 94065, Ph: 925-427-7587 Fax: 925-427-7570
RFI #: 67
Date: 10/25/2006
Job: 437 Los Medanos College
Phone: 925-427-7587

CC:

Subject: Plumbing - Mechanical/Chiller/Pump Building

Drawing: 1/P1.0 Spec Section:
Cost Impact: Subject to Response Schedule Impact: Subject to Response

Request: Date Required: 11/2/2006
There is not a 3" Storm Drain roughed in through the slab as shown. Please advise.

Requested by: Staci Freeman, Dowdle & Sons Mechanical, Inc

Response:

Approved By:
Company: Date:

Page 1 of 1

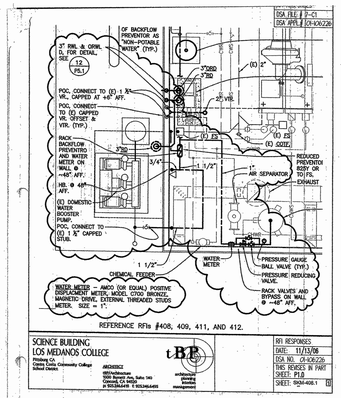

REFERENCE RFIs #408, 409, 411, AND 412.

SCIENCE BUILDING
LOS MEDANOS COLLEGE
Pittsburg, CA
Contra Costa Community College District

ARCHITECT
tBP/Architecture
1000 Burnett Ave, Suite 140
Concord, CA 94520
p: 925.246.6400 f: 925.246.6495

tBP architecture planning interiors management

RFI RESPONSES
DSA FILE # 7-C1
DSA APPL # 01-106226
DATE: 11/13/06
DSA NO. 01-106226
THIS REVISES IN PART
SHEET: P1.0
SHEET: SKM-408.1

S. J. AMOROSO
Request For Information/Clarification

DSA FILE NO. 7-C1
DSA APPL. No. 01-106226

To: tBP/Architecture, 1000 Burnett Ave, Suite 140, Concord, CA 94520
Attn: Celia Chiang, Tom Beckett
Fax: 925-246-6495

Project: LOS MEDANOS COLLEGE SCIENCE BUILDING, Contra Costa Community College District
tBP ph#: 20247.00

Subj.: No (E) 1 ½" water service to chiller building RFI No: **409**
Reference (dwg, spec.): P1.0
Subcontractor RFI: Dowdle 68

Reply Requested By: 11/2/06

INFORMATION REQUESTED: Date: 10/26/06

Per attached Dowdle RFI 68, there is no (E) 1 ½" water service installed through the slab as shown. Please advise.

SUGGESTED SOLUTION:
Cost Impact: ☐ Schedule Impact: ☐ days By: Mark Delgado

RESPONSE: DATE:

See Attached Response

Dowdle & Sons Mechanical, Inc.
P.O. Box 5189
Napa, CA 94581
Ph: (707)224-6888

RFI

To: Mark Delgado, SJ Amoroso, 360 Bridge Parkway, Redwood Shores, CA 94065, Ph: 925-427-7587 Fax: 925-427-7570
RFI #: 68
Date: 10/26/2006
Job: 437 Los Medanos College
Phone: 925-427-7587

CC:

Subject: Plumbing-Mechanical/Chiller/Pump Building: 1 1/2" Water Service

Drawing: 1/P1.0 Spec Section:
Cost Impact: Subject to Response Schedule Impact: Subject to Response

Request: Date Required: 11/2/2006
There is not a 1 1/2" Water Service roughed-in through slab as shown. Please advise.

Requested by: Staci Freeman, Dowdle & Sons Mechanical, Inc

Response:

Approved By:
Company: Date:

Summary of Comments on To:

Page: 2

Author: Weaver
Subject: Text Box
Date: 11/13/2006 8:19:08 PM
Drawing was issued during site prep phase and was not reflected in these drawings.
Contractor to provide and install 1 1/2" DW dbb (gate valve) at adjacent booster pump piping.
See attached sketch SKM-409.1 for details.

Jim Weaver / tBP Architecture
Dave Weston / AAME

11/13/06

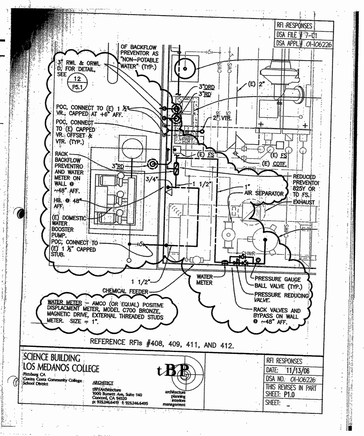

REFERENCE RFIs #408, 409, 411, AND 412.

SCIENCE BUILDING
LOS MEDANOS COLLEGE
Pittsburg, CA
Contra Costa Community College District

ARCHITECT
tBP/Architecture
1000 Burnett Ave, Suite 140
Concord, CA 94520
p: 925.246.6400 f: 925.246.6495

RFI RESPONSES
DATE: 11/13/06
DSA NO. 01-106226
THIS REVISES IN PART
SHEET: P1.0
SHEET: SKM-409.1

RFI No. 409 (Revised 11/30/06)
Response Transmittal

Date: 11/30/2006

DSA No. 01-106226
DSA File No. 7-C1
PCO.

To: S.J. Amoroso Construction Company, 360 Bridge Parkway, Redwood City, CA 94065
Attention: Mark Delgado
Email: jcb4026@amoroso.com
Project: LMC – Science Building, Contra Costa Community College District, 4BP FIN 20227.00

From: Jim Weaver
No. Pages: 2 (including cover page)
Cc: Bob Harlor, Inspector of Record; Dan Petersike, CCCC District; Dave Weston, Ainsworth Mechanical Engineers; Tom Beckett, tBP Architecture

File: 20212.007.04

Comments: ☐ Mark:
Attached find revised sketch SKM-409.1 to reflect deletion of the water meter located at the west wall. South meter remains and as described.
Please replace this sheet for the one dated 11/13/06 of RFI 409.
Let me know if any question.
Thanks.
Jim.

tBP/Architecture, 1000 Burnett Ave, Suite 140, Concord, CA, 94520. ph: 925.246.6400. fax: 925.246.6495

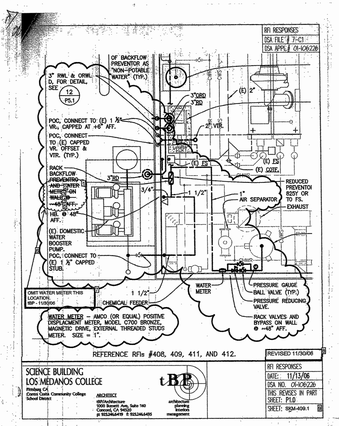

REFERENCE RFIs #408, 409, 411, AND 412.

SCIENCE BUILDING
LOS MEDANOS COLLEGE
Pittsburg, CA
Contra Costa Community College District

ARCHITECT
tBP/Architecture
1000 Burnett Ave, Suite 140
Concord, CA 94520
p: 925.246.6400 f: 925.246.6495

REVISED 11/30/06

RFI RESPONSES
DSA FILE # 7-C1
DSA APPL # 01-106226
DATE: 11/13/06
DSA NO. 01-106226
THIS REVISES IN PART
SHEET: P1.0
SHEET: SKM-409.1

S. J. AMOROSO
Request For Information/Clarification

DSA FILE NO. 7-C1
DSA APPL. No. 01-106226

To: tBP/Architecture, 1000 Burnett Ave, Suite 140, Concord, CA 94520
Attn: Celia Chiang, Tom Beckett
Fax: 925-246-6495

Project: LOS MEDANOS COLLEGE SCIENCE BUILDING, Contra Costa Community College District
tBP ph#: 20247.00

Subj.: No overflow drain at Chiller Building canopy RFI No: **410**
Reference (dwg, spec.): P1.0
Subcontractor RFI: Dowdle 69

Reply Requested By: 11/2/06

INFORMATION REQUESTED: Date: 10/26/06

Per attached Dowdle RFI 69, there is no overflow drain to be installed at the Chiller building canopy. Please advise.

SUGGESTED SOLUTION:
Cost Impact: ☐ Schedule Impact: ☐ days By: Mark Delgado

RESPONSE: DATE:

Overflow drain is not required on the Canopy.

Dave Weston/AAME - 11/3/06

Dowdle & Sons Mechanical, Inc.
P.O. Box 5189
Napa, CA 94581
Ph: (707)224-6888

RFI

To: Mark Delgado, SJ Amoroso, 360 Bridge Parkway, Redwood Shores, CA 94065, Ph: 925-427-7587 Fax: 925-427-7570
RFI #: 69
Date: 10/26/2006
Job: 437 Los Medanos College
Phone: 925-427-7587

CC:

Subject: Plumbing - Mechanical/Chiller/Pump Building: GFO @ Canopy

Drawing: 1/P1.0 Spec Section:
Cost Impact: Subject to Response Schedule Impact: Subject to Response

Request: Date Required: 11/2/2006
Canopy @ Pump Building does not show an Over Flow Drain. Is this required?

Requested by: Staci Freeman, Dowdle & Sons Mechanical, Inc

Response:

Approved By:
Company: Date:

S. J. AMOROSO
Request For Information/Clarification

DSA FILE NO. 7-C1
DSA APPL. No. 01-106226

To: tBP/Architecture, 1000 Burnett Ave, Suite 140, Concord, CA 94520
Attn: Celia Chiang, Tom Beckett
Fax: 925-246-6495

Project: LOS MEDANOS COLLEGE SCIENCE BUILDING, Contra Costa Community College District
tBP ph#: 20247.00

Subj.: 3/4" CW drop at BFP in Chiller Building RFI No: **411**
Reference (dwg, spec.): P1.0
Subcontractor RFI: Dowdle 70

Reply Requested By: 11/2/06

INFORMATION REQUESTED: Date: 10/26/06

Per attached Dowdle RFI 70, there is a ¾" CW drop prior to POC at the BFP. Is this to be capped for future use? Please advise.

SUGGESTED SOLUTION:
Cost Impact: ☐ Schedule Impact: ☐ days By: Mark Delgado

RESPONSE: DATE:

Drop 3/4" line to hose bibb at +48" AFF.
See attached sketch SKM-411.1.

Jim Weaver / tBP Architecture
Dave Weston / AAME

11/13/06

Dowdle & Sons Mechanical, Inc.
P.O. Box 5189
Napa, CA 94581
Ph: (707)224-6888

RFI

To: Mark Delgado, SJ Amoroso, 360 Bridge Parkway, Redwood Shores, CA 94065, Ph: 925-427-7587 Fax: 925-427-7570
RFI #: 70
Date: 10/26/2006
Job: 437 Los Medanos College
Phone: 925-427-7587

CC:

Subject: Plumbing - Mechanical/Chiller/Pump Building: 3/4" CW Drop

Drawing: 1/P1.0 Spec Section:
Cost Impact: Subject to Response Schedule Impact: Subject to Response

Request: Date Required: 11/2/2006
A 3/4" CW drop is shown prior to POC @ BFP. Is this to be capped for future use? Please advise.

Requested by: Staci Freeman, Dowdle & Sons Mechanical, Inc

Response:

Approved By:
Company: Date:

S. J. AMOROSO
Request For Information/Clarification

DSA FILE NO. 7-C1
DSA APPL. No. 01-106226

To: tBP/Architecture, 1000 Burnett Ave, Suite 140, Concord, CA 94520
Attn: Celia Chiang, Tom Beckett
Fax: 925-246-6495

Project: LOS MEDANOS COLLEGE SCIENCE BUILDING, Contra Costa Community College District
tBP ph#: 20247.00

Subj.: No make-up water at Chiller Building RFI No: **412**
Reference (dwg, spec.): P1.0
Subcontractor RFI: Dowdle 71

Reply Requested By: 11/2/06

INFORMATION REQUESTED: Date: 10/26/06

Per attached Dowdle RFI 71, there is no make-up water indicated for the chilled water loop. Please advise.

SUGGESTED SOLUTION:
Cost Impact: ☐ Schedule Impact: ☐ days By: Mark Delgado

RESPONSE: DATE:

See attached sketch SKM-412.1 for make-up water requirements.

Note: Per owner, provide with flow meter, pressure reducing valve, pressure gauge, and bypass line.

Meter to be an "AMCO" (or equal), model C700 bronze meter.

Pressure reducing valve to be a "WATTS" (or equal), model 25AUB-DU-Z3. Set PRV pressure to 5 psi higher than chilled water loop operating pressure.

Jim Weaver / tBP Architecture
Dave Weston / AAME

11/13/06

Dowdle & Sons Mechanical, Inc.
P.O. Box 5189
Napa, CA 94581
Ph: (707)224-6888

RFI

To: Mark Delgado, SJ Amoroso, 360 Bridge Parkway, Redwood Shores, CA 94065, Ph: 925-427-7587 Fax: 925-427-7570
RFI #: 71
Date: 10/26/2006
Job: 437 Los Medanos College
Phone: 925-427-7587

CC:

Subject: Plumbing - Mechanical/Chiller/Pump Building: No Make-Up Water

Drawing: 1/P1.0 Spec Section:
Cost Impact: Subject to Response Schedule Impact: Subject to Response

Request: Date Required: 11/2/2006
No Make-Up Water is indicated for Chilled Water Loop. Please advise.

Requested by: Staci Freeman, Dowdle & Sons Mechanical, Inc

Response:

Approved By:
Company: Date:

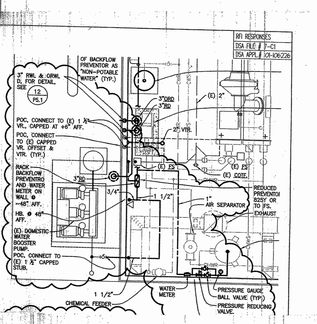

REFERENCE RFIs #408, 409, 411, AND 412.

SCIENCE BUILDING
LOS MEDANOS COLLEGE
Pittsburg, CA
Contra Costa Community College District

ARCHITECT
tBP/Architecture
1000 Burnett Ave, Suite 140
Concord, CA 94520
p: 925.246.6400 f: 925.246.6495

RFI RESPONSES
DATE: 11/13/06
DSA NO. 01-106226
THIS REVISES IN PART
SHEET: P1.0
SHEET: SKM-412.1

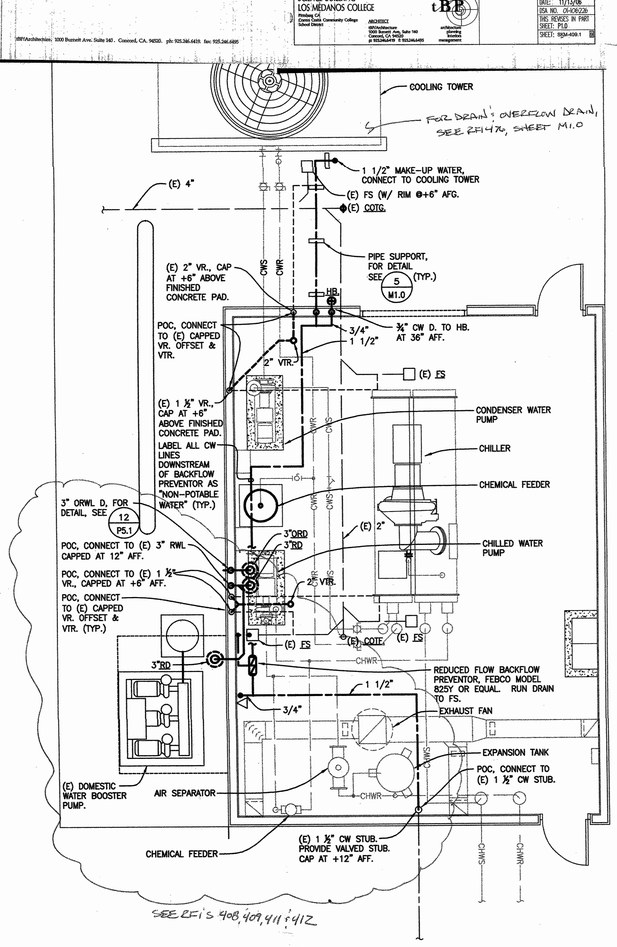

PLUMBING - MECHANICAL/CHILLER/PUMP BUILDING

SCALE: 1/4"=1'-0"

1 P1.0

NOTE: 1. REFERENCE AND COORDINATE WITH MECHANICAL DRAWINGS FOR EXACT LOCATION OF MECHANICAL EQUIPMENT.

---

tBP/Architecture
1000 Burnett Avenue, Suite 140
Concord, CA 94520
p: 925.246.6400 f: 925.246.6495

architecture planning interiors management

architect

AINSWORTH ASSOCIATES
MECHANICAL ENGINEERS
SACRAMENTO, CA

consultant

name
address
city, state, zip
ph: fx:

agency

EXPIRATION STAMP
DEPARTMENT OF STATE ARCHITECT
OFFICE OF REGULATION SERVICES
APR - 6 2009
APPROVED
DATE 1-16-09

SCIENCE BUILDING
LOS MEDANOS COLLEGE
Contra Costa Community College District

owner

tBP project number : 20247.00
file name:
drawn by: checked by:
date: NOVEMBER 15, 2004

Rev:	date:	description:

drawing title:
PLUMBING - MECHANICAL/CHILLER/PUMP BUILDING AND DETAILS

LMC SCIENCE 313-023-112.01-0-00.00

drawing no: **P1.0**

drawing of ?

RFI # 000
Page 1

C:\Documents and Settings\jweaver\Local Settings\Temp\AcPublish_2000\P1.0.dwg Tue, Nov 13, 2007 - 05:50pm

S. J. AMOROSO
Request For Information/Clarification

DSA FILE NO. 7-C1
DSA APPL. No. 01-106226

To: tBP/Architecture, 1000 Burnett Ave, Suite 140, Concord, CA 94520
Attn: Celia Chiang, Tom Beckett
Fax: 925-246-6495

Project: LOS MEDANOS COLLEGE SCIENCE BUILDING, Contra Costa Community College District
tBP p/n: 20247.00

Subj.: Drinking Fountain Vent on First Floor — RFI No: **87**
Reference (dwg, spec): P1.1
Subcontractor RFI: Dowdle 17
Reply Requested By: 1/17/06

Date: 1/10/06

INFORMATION REQUESTED:
Please note the attached Dowdle and Son's RFI No. 17 regarding the drinking Fountain. Vent from the first floor which is shown on P1.1 penetrating the roof above the lecture hall. The bottom of steel at F line is 12'-9" finish ceiling. At the Lecture hall it is 14'-6". Please advise.

SUGGESTED SOLUTION: Dowdle recommends re-routing vent in first floor ceiling to restrooms vents.

Cost Impact: ☐ Schedule Impact: ☐ days By: Justin Warren

RESPONSE: DATE:

Attachments: By:

TRANSMITTAL RECORD:

FROM	TO	DATE
S.J. AMOROSO	tBP / ARCHITECTURE	1/10/06
tBP / ARCHITECTURE	ENGINEER/CONSULTANT	
ENGINEER/CONSULTANT	tBP / ARCHITECTURE	
tBP / ARCHITECTURE	S.J. AMOROSO	
S.J. AMOROSO	ORIGINATOR	

RFI # 000
Page 1

Summary of Comments on AAME-Response-RFI No. 87.pdf

Page: 1

Response number: 1
Author: Deskbot
Date: 1/12/2006 10:48:03 AM
Comment: Contractor re-routing of vent to restroom appears acceptable. Contractor to indicate routing change within coordinated shop drawings.

S. J. AMOROSO
Request For Information/Clarification

DSA FILE NO. 7-C1
DSA APPL. No. 01-106226

To: tBP/Architecture, 1000 Burnett Ave, Suite 140, Concord, CA 94520
Attn: Celia Chiang, Tom Beckett
Fax: 925-246-6495

Project: LOS MEDANOS COLLEGE SCIENCE BUILDING, Contra Costa Community College District
tBP p/n: 20247.00

Subj.: Roof drain on lecture hall 141 roof — RFI No: **337**
Reference (dwg, spec.): A3-1, P1.1
Subcontractor RFI:
Reply Requested By: 9/12/06

Date: 9/5/06

INFORMATION REQUESTED:
Per various field discussions, it has been decided that, from a roofing and waterflow perspective, it makes sense to relocate the northern most roof drain shown on sheet A3-1 from it's location at roughly E.5-line and 0.5-line to the west (left hand side) near to E-line, similar to the other roof drain over the lecture hall. Per the plumbing drawing on sheet P1.1, the piping for this drain runs towards F-line in a 3" system. Now, this drain would tie into the 3" system already draining the other roof drain on the lecture hall. Please review to ensure that having both roof drains tied into the same 3" system is acceptable.

SUGGESTED SOLUTION:
Cost Impact: ☐ Schedule Impact: ☐ days By: Justin Warren

RESPONSE: DATE:

The proposed changes are acceptable from a plumbing viewpoint. The 3" drain is acceptable for the added area.

Dave Weston/AAME - 9/8/06

RFI # 000
Page 1

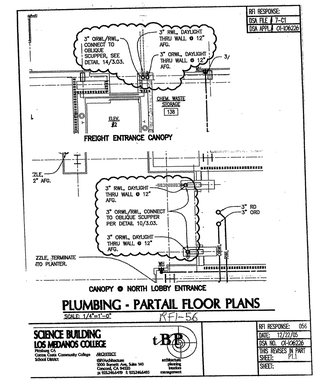

S. J. AMOROSO
Request For Information/Clarification

DSA FILE NO. 7-C1
DSA APPL. No. 01-106226

To: tBP/Architecture, 1000 Burnett Ave, Suite 140, Concord, CA 94520
Attn: Celia Chiang, Tom Beckett
Fax: 925-246-6495

Project: LOS MEDANOS COLLEGE SCIENCE BUILDING, Contra Costa Community College District
tBP p/n: 20247.00

Subj.: Floor Drain in Room 138 — RFI No: **91**
Reference (dwg, spec): A1.1
Subcontractor RFI: Dowdle #20
Reply Requested By: 1/18/06

Date: 1/12/06

INFORMATION REQUESTED:
Please note the attached Dowdle and Sons RFI No. 20 regarding a floor drain in room 138 which is shown in the Architectural Drawings but not in the Plumbing Drawings. Please advise.

SUGGESTED SOLUTION:

Cost Impact: ☐ Schedule Impact: ☐ days By: Justin Warren

RESPONSE: DATE:

Attachments: By:

TRANSMITTAL RECORD:

FROM	TO	DATE
S.J. AMOROSO	tBP / ARCHITECTURE	1/12/06
tBP / ARCHITECTURE	ENGINEER/CONSULTANT	
ENGINEER/CONSULTANT	tBP / ARCHITECTURE	
tBP / ARCHITECTURE	S.J. AMOROSO	
S.J. AMOROSO	ORIGINATOR	

RFI # 000
Page 1

Dowdle & Sons Mechanical, Inc.
P.O. Box 919
Rio Vista, CA 94571
Ph: (707)374-6468

RFI

To: Mark Delgado, BJ Advance, 390 Bridge Parkway, Redwood Shores, CA 94065, Ph: 650-427-7567, Fax: 650-427-7570
CC: Dowdle, Andy (Dowdle & Sons Mechanical, Inc), Beardsley, Matt (Dowdle & Sons Mechanical, Inc), Tines, Greg (Dowdle & Sons Mechanical, Inc)
Subject: Floor Drain Room 138

RFI #: 20
Date: 1/20/06
Job: 437 Los Medanos College
Phone: 925-427-7567

Drawing: A1.1
Cost Impact:
Spec Section:
Schedule Impact:

Request: A Floor Drain is shown on A1.1 in Room 138. This drain is not shown on Plumbing Drawings. Please advise. — Date Required: 1/18/2006

Requested by: Steve Freeman, Dowdle & Sons Mechanical, Inc

Response:

Answered By: Date:

Page 1 of 1

Summary of Comments on AAME-Response-RFI No. 91.pdf

Page: 1

Response number: 1
Author: Deskbot
Date: 1/19/2006 12:47:00 PM
Comment: Please provide a detail for Floor Drain indicated on Architectural drawings. Exterior Acid waste line near grid line F.8 from room 133 to room 136. Also have cleanout within Room 133 to room 138. Install trap primer at line. Trap primer to be installed adjacent to wall hydrant on exterior wall (access door opening to inside room).

S. J. AMOROSO
Request For Information/Clarification

DSA FILE NO. 7-C1
DSA APPL. No. 01-106226

To: tBP/Architecture, 1000 Burnett Ave, Suite 140, Concord, CA 94520
Attn: Celia Chiang, Tom Beckett
Fax: 925-246-6495

Project: LOS MEDANOS COLLEGE SCIENCE BUILDING, Contra Costa Community College District
tBP p/n: 20247.00

Subj.: Wall hydrants in metal panel locations — RFI No: **316**
Reference (dwg, spec.): A4-1, A4-2, P1.1, P1.3, P1.4
Subcontractor RFI: Dowdle #2; 63
Reply Requested By: 8/21/06

Date: 8/15/06

INFORMATION REQUESTED:
The response to RFI 205 suggests that water hydrants mounted in exterior walls are not desirable in metal panel locations. However, there are still 4 water hydrants that are located in metal panel locations. These locations are as follows:
E-line at G-line
E-line at 5.8-line
H-line at 5.8-line
5-line near G-line

The last of these locations can easily be installed just around the corner east of G-line. The other 3 locations are not near plaster. Please advise if these are to be relocated or eliminated. If they are to be installed where shown, *please provide a detail for waterproofing.*

SUGGESTED SOLUTION:
Cost Impact: ☐ Schedule Impact: ☐ days By: Bryan Newman

RESPONSE: DATE:

Relocated / remove wall hydrants as indicated on attached sketches SK316.1 to SK316.4. Provide credit for the removal of the 3 wall hydrants and associated piping/hangers/supports, etc.

Dave Weston/AAME - 8/25/06

Note that all exterior wall mounted water hydrants are to be mounted in cement plaster walls. All water hydrant are to be located at least 1'-0" to exterior metal panel wall finish. Also see the response to RFI #305.

Vanessa Ling/CSP - 8/29/06

RFI # 000
Page 1

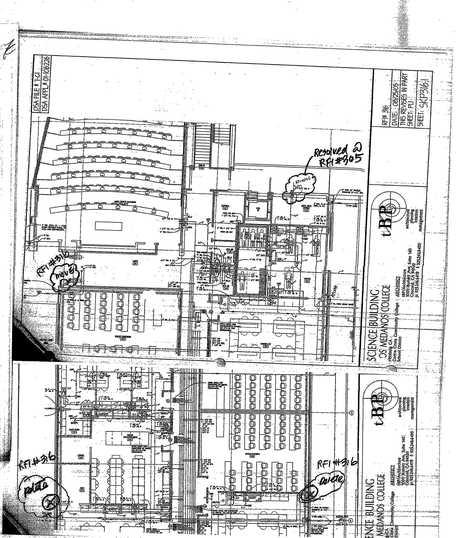

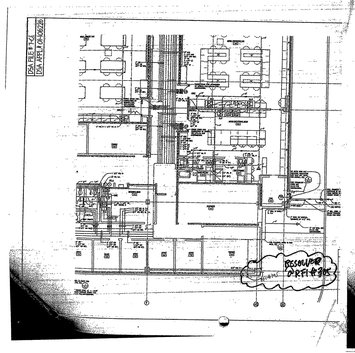

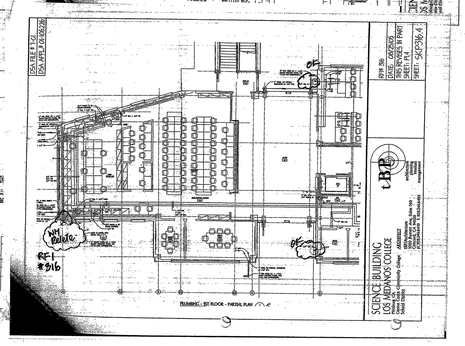

AAME 9/9

S. J. AMOROSO
Request For Information/Clarification

DSA FILE NO. 7-C1
DSA APPL. No. 01-106226

To: tBP/Architecture, 1000 Burnett Ave, Suite 140, Concord, CA 94520
Attn: Celia Chiang, Tom Beckett
Fax: 925-246-6495

Project: LOS MEDANOS COLLEGE SCIENCE BUILDING, Contra Costa Community College District
tBP p/n: 20247.00

Subj.: Utility Vault/Neutralization Tank — RFI No: **138**
Reference (dwg, spec):
Subcontractor RFI# Dowdle 34
Reply Requested By: 2/16/06

Date: 2/9/06

INFORMATION REQUESTED:
Please note the attached Dowdle and Sons RFI No. 34 regarding the Acid Waste Utility Vault - shown on P1.1 at 2.0 and H.9 line. Please provide dimensions to vault from gridlines.

SUGGESTED SOLUTION:

Cost Impact: ☐ Schedule Impact: ☐ days By: Mark Delgado

RESPONSE: DATE: 2.16.06
SEE ATTACHED RESPONSE

Attachments: By:

TRANSMITTAL RECORD:

FROM	TO	DATE
S.J. AMOROSO	tBP / ARCHITECTURE	2/9/06
tBP / ARCHITECTURE	ENGINEER/CONSULTANT	
ENGINEER/CONSULTANT	tBP / ARCHITECTURE	
tBP / ARCHITECTURE	S.J. AMOROSO	2.16.06
S.J. AMOROSO	ORIGINATOR	

RFI # 000
Page 1

Dowdle & Sons Mechanical, Inc.
P.O. Box 919
Rio Vista, CA 94571
Ph: (707)374-6468

RFI

To: Justin Warren, BJ Advance, 390 Bridge Parkway, Redwood Shores, CA 94065, Ph: 650-654-1900, Fax: 650-654-6002
CC: Dowdle, Andy (Dowdle & Sons Mechanical, Inc), Beardsley, Matt (Dowdle & Sons Mechanical, Inc), Tines, Greg (Dowdle & Sons Mechanical, Inc)
Subject: Utility Vault/Neutralization Tank

RFI #: 34
Date: 2/6/2006
Job: 437 Los Medanos College
Phone: 925-427-7567

Drawing: P1.1 @ 2.0 and H.9
Cost Impact: None
Spec Section:
Schedule Impact: None

Request: On P1.1 @ 2.0 and H.9 at Acid Waste Utility Vault is shown. A detail of this vault and neutralizing sump are shown on P3.1 Detail #7. Please provide dimensions to vault from grid lines and an elevation to the top of traffic rated lid. — Date Required: 2/13/2006

Requested by: Steve Freeman, Dowdle & Sons Mechanical, Inc

Response:

Answered By: Date:

Page 1 of 1

Project Fax Memorandum

Date: 2/16/06
To: S.J. Amoroso, 390 Bridge Parkway, Redwood Shores CA 94065
Attn: Mark Delgado
Job/ Fax: 925.427.7570
Proj: **LOS MEDANOS COLLEGE SCIENCE BUILDING**, Contra Costa Community College District
Proj No.: 20247.00
DSA No.: 01-106226; File # 7-C1
From: T. Beckett, tBP/Architecture
cc: file, C. Chiang, V. Ling

Architecture, Planning, Interiors, Management

RESPONSE TO RFI # 138

Mark,

Felipe, your plumbing subcontractor and I walked the area where the acid waste utility vault is to be placed.
We agreed that the POC installed at site preparation needs to be exposed to determine its exact location and to verify size…4" or 6". Once that information is known, we agreed the plumber would determine the best route and means to accomplish the connection of each of the 4" building sanitary lateral and the outfall pipe from the acid waste tank.
We discussed the fact that the acid waste utility vault must land entirely within the adjacent roadway due to the need for frequent inspection and maintenance to replenish the limestone within. The top elevation of the tank will be + 1" to the asphalt roadway, whose elevation will be determined by interpolation of the drain inlet elevations which are adjacent to either side of the utility vault.
Felipe was cautioned that the SK2 drawings we provided previously may require the adjustment of the current finish elevation of either or both of the drain inlets, which should be considered as a part of determining the acid waste vault top elevation.
So, the location and elevation of the acid waste utility tank will need to be determined by taking the steps noted above. We will continue to discuss and confirm specifics as we are provided feedback from the field work at the site.

Regards,

Tom Beckett
tBP/Architecture

1000 Burnett Avenue, Suite 140 • Concord, CA 94520-2068 • Phone: (925) 246-6419 • Fax: (925) 246-6495

AAME 9/9

S. J. AMOROSO
Request For Information/Clarification

DSA FILE NO. 7-C1
DSA APPL. No. 01-106226

To: tBP/Architecture, 1000 Burnett Ave, Suite 140, Concord, CA 94520
Attn: Celia Chiang, Tom Beckett
Fax: 925-246-6495

Project: LOS MEDANOS COLLEGE SCIENCE BUILDING, Contra Costa Community College District
tBP p/n: 20247.00

Subj.: 3" AV Shown to the 2nd Floor — RFI No: **169**
Reference (dwg, spec.) P1.1
Subcontractor RFI: Dowdle 37
Reply Requested By: 3/8/06

Date: 3/1/06

INFORMATION REQUESTED:
Please note the attached Dowdle and Sons RFI No. 37 regarding an AV shown to continues up to the second floor which is blocked by a 1838x852. Please provide an alternate route or wall furring detail allowing access.

SUGGESTED SOLUTION:

Cost Impact: ☐ Schedule Impact: ☐ days By: Mark Delgado

RESPONSE: DATE:

Author: Deskbot
Subject: None
Date: 3/2/2006 7:55:28 PM
Comment: Contractor's field verification does not believe double void within common (double) wall between Elevator Machine Room 259 and Storage Room 261. Locate vent within Storage Room portion of the double wall.

Attachments: By:

TRANSMITTAL RECORD:

FROM	TO	DATE
S.J. AMOROSO	tBP / ARCHITECTURE	3/1/06
tBP / ARCHITECTURE	ENGINEER/CONSULTANT	AAME, 3/6/06
ENGINEER/CONSULTANT	tBP / ARCHITECTURE	
tBP / ARCHITECTURE	S.J. AMOROSO	
S.J. AMOROSO	ORIGINATOR	

RFI # 000
Page 1

Dowdle & Sons Mechanical, Inc.
P.O. Box 919
Rio Vista, CA 94571
Ph: (707)374-6468

RFI

To: Justin Warren, BJ Advance, 390 Bridge Parkway, Redwood Shores, CA 94065, Ph: 650-654-1900, Fax: 650-654-6002
CC:

RFI #: 37
Date: 2/28/2006
Job: 437 Los Medanos College
Phone: 925-427-7567

Subject: 3" AV Shown to Second Floor

Drawing: P1.1 @ 2.0 and F.9
Cost Impact:
Spec Section:
Schedule Impact:

Request: On P1.1 @ 2.25 and F.9 a 3" AV is shown to continue up to the 2nd floor. Below the 2nd floor, an center line of the wall is an LB 38 x 852. This have prevents access to the 2nd floor at this location. Please provide alternate route or wall furring detail allowing access. — Date Required: 3/7/2006

Requested by: Steve Freeman, Dowdle & Sons Mechanical, Inc

Response:

Answered By: Date:

Company

Page 1 of 1

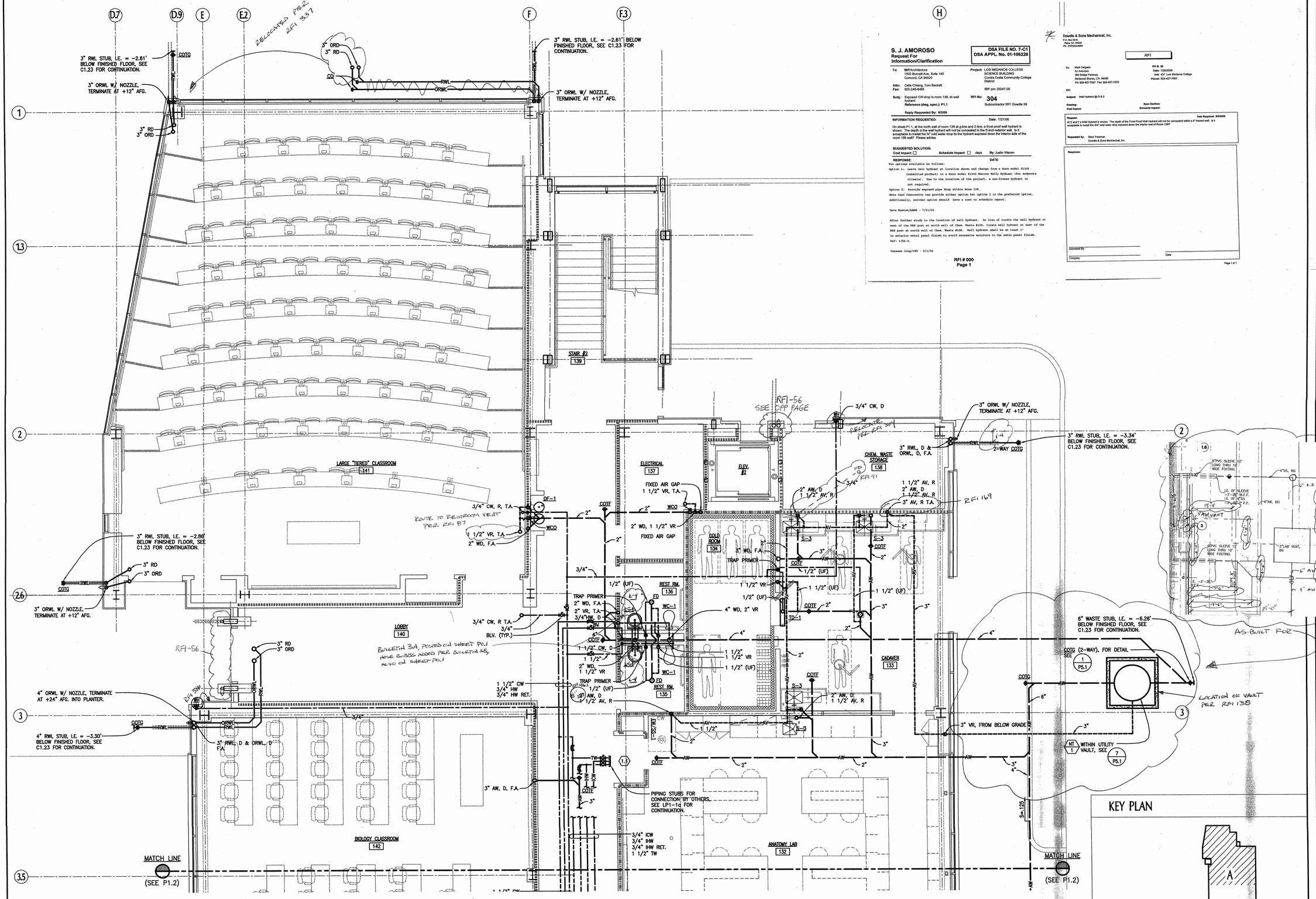

S. J. AMOROSO
Request For Information/Clarification

DSA FILE NO. 7-C1
DSA APPL. No. 01-106226

To: tBP/Architecture, 1300 Burnett Ave, Suite 140, Concord, CA 94520
Attn: Celia Chiang, Tom Beckett
Fax: 925-246-6495

Project: LOS MEDANOS COLLEGE SCIENCE BUILDING, Contra Costa Community College District
tBP p/n: 20247.00

Subj.: Exposed CW drop in room 138, to wall hydrant
Reference (dwg, spec.): P1.1

RFI No: 304
Subcontractor RFI: Dowdle 58

Reply Requested By: 8/3/06

INFORMATION REQUESTED: Date: 7/27/06

On sheet P1.1, at the north wall of room 138 at g-line and 2-line, a frost proof wall hydrant is shown. The depth of the wall hydrant will not be concealed in the 6-inch exterior wall. Is it acceptable to install the 16" cold water drop to the hydrant exposed down the interior side of the room 138 wall? Please advise.

SUGGESTED SOLUTION:
Cost Impact: ☐ Schedule Impact: ☐ days By: Justin Warren

RESPONSE: DATE:
Two options available as follow:
Option 1: Leave wall hydrant at location shown and change from a Zurn model Z1355 - (submitted product) to a Zurn model Z1350 Narrow Wally Hydrant (for moderate climate). Due to the location of the project, a non-freeze hydrant is not required.
Option 2: Provide exposed pipe drop within Room 138.
Note that Contractor can provide either option but option 1 is the preferred option. Additionally, neither option should have a cost or schedule impact.

Dave Weston/AAHE - 7/31/06

After further study to the location of wall hydrant. In lieu of locate the wall hydrant at west of the HSS post at north wall of Chem. Waste #139, locate wall hydrant at east of the HSS post at north wall of Chem. Waste #138. Wall hydrant shall be at least 1' to exterior metal panel finish to avoid excessive moisture to the metal panel finish.
Ref: 4/A4-2.

Vanessa Ling/SBP - 8/1/06

RFI # 000
Page 1

Dowdle & Sons Mechanical, Inc.
P.O. Box 9218
Napa, CA 94558
Ph: (707)224-6999

RFI

To: Mark Delgado, BJ Aminian, 350 Bridge Parkway, Redwood Shores, CA 94065, Ph: 925-427-7567 Fax: 925-427-7570

RFI #: 58
Date: 7/27/2006
Job: 437 Los Medanos College
Phone: 925-427-7567

CC:

Subject: Wall Hydrant @ G & 2

Drawing:
Cost Impact:
Spec Section:
Schedule Impact:

Request: Date Required: 8/3/2006
A/3 and 2 a Wall Hydrant is shown. The depth of the Frost Proof Wall Hydrant will not be concealed within a 6" framed wall. Is it acceptable to install the 3/4" cold water drop exposed down the interior wall of Room 138?

Requested by: Staci Freeman, Dowdle & Sons Mechanical, Inc

Response:

Answered By
Company
Date

Page 1 of 1

PLUMBING - 1ST FLOOR - PARTIAL PLAN

SCALE: 1/4"=1'-0"

1/P1.1

KEY PLAN

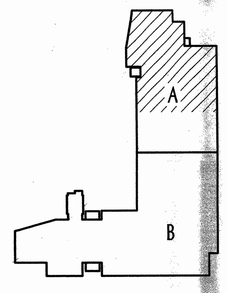

tBP
architecture
planning
interiors
management

tBP/Architecture
1300 Burnett Avenue, Suite 140
Concord, CA 94520
p: 925.246.6419 f: 925.246.6495

architect

AINSWORTH ASSOCIATES
MECHANICAL ENGINEERS
SACRAMENTO, CA
05-2009

consultant

DESTRUCTION NOTICE
DIV. OF THE STATE ARCHITECT
OFFICE OF REGULATION SERVICES
APP. - 05/15/06
DATE 1-10-35

name
address
city, state, zip
ph:

agency

SCIENCE BUILDING
LOS MEDANOS COLLEGE

Contra Costa Community College District

owner

tBP project number : 20247.00
file name:
drawn by: checked by:
date: NOVEMBER 15, 2004

Rev.	date:	description:

drawing title:
PLUMBING -
1ST FLOOR - PARTIAL PLAN

LMC SCIENCE 313-023-112.01-0-00.00
drawing no.:
P1.1
drawing of ?

I:\2005-0078\DWG\P-1.1-Dwg Time:Nov\12\2004-05:39pm

S. J. AMOROSO
Request For Information/Clarification

DSA FILE NO. 7-C1
DSA APPL. No. 01-106226

To: IBP/Architecture, 1000 Burnett Ave, Suite 140, Concord, CA 94520
Attn: Celia Chiang, Tom Beckett
Fax: 925-246-6495

Project: LOS MEDANOS COLLEGE SCIENCE BUILDING, Contra Costa Community College District
IBP p/n: 20247.00

Subj.: Biology Prep/Stock Room Ice Machine
Reference (dwg, spec): P1.2

RFI No: 92
Subcontractor RFI: Dowdle #21

Reply Requested By: 1/18/06

Date: 1/12/06

INFORMATION REQUESTED:
Please note the attached Dowdle and Sons RFI No. 21 regarding Room 146 which shows a OFCI ice machine and a 2" Floor Drain in the same area. Please advise.

SUGGESTED SOLUTION:

Cost Impact: ☐ Schedule Impact: ☐ days By: Justin Warren

RESPONSE: DATE:

Attachments: By:

TRANSMITTAL RECORD:

FROM	TO	DATE
S.J. AMOROSO	IBP / ARCHITECTURE	1/12/06
IBP / ARCHITECTURE	ENGINEER/CONSULTANT	
ENGINEER/CONSULTANT	IBP / ARCHITECTURE	
IBP / ARCHITECTURE	S.J. AMOROSO	
S.J. AMOROSO	ORIGINATOR	

RFI # 000
Page 1

Summary of Comments on AAME-Response-RFI No. 92.pdf

Page: 1

Sequence number: 1
Author: Administrator
Subject: Note
Date: 1/13/2006 1:49:30 PM
Recommend installing floor sink in lieu of Floor Drain as recommended by Plumbing Contractor.

S. J. AMOROSO
Request For Information/Clarification

DSA FILE NO. 7-C1
DSA APPL. No. 01-106226

To: IBP/Architecture, 1000 Burnett Ave, Suite 140, Concord, CA 94520
Attn: Celia Chiang, Tom Beckett
Fax: 925-246-6495

Project: LOS MEDANOS COLLEGE SCIENCE BUILDING, Contra Costa Community College District
IBP p/n: 20247.00

Subj.: Lab Furnishings on 0 Line
Reference (dwg, spec): P1.2

RFI No: 93
Subcontractor RFI: Dowdle #22

Reply Requested By: 1/18/05

Date: 1/12/06

INFORMATION REQUESTED:
Please note the attached Dowdle and Sons RFI No. 22 regarding Lab Furnishings on the south side of gridline 8 on LF1-1a. The sink and the cabinet are switched between LF1-1a and P1.2. Please advise.

SUGGESTED SOLUTION:

Cost Impact: ☐ Schedule Impact: ☐ days By: Justin Warren

RESPONSE: DATE: 1/18/06

LABORATORY FURNISHINGS LAYOUT AS SHOWN ON LABORATORY LEVEL PLUMBING ROUGH-IN WORK SHALL BE MADE ACCORDINGLY.

Attachments:

By: B-CORE/AAME

TRANSMITTAL RECORD:

FROM	TO	DATE
S.J. AMOROSO	IBP / ARCHITECTURE	1/12/06
IBP / ARCHITECTURE	ENGINEER/CONSULTANT	
ENGINEER/CONSULTANT	IBP / ARCHITECTURE	
IBP / ARCHITECTURE	S.J. AMOROSO	
S.J. AMOROSO	ORIGINATOR	

CC: SON DRAWINGS

RFI # 000
Page 1

Dowdle & Sons Mechanical, Inc.
P.O. Box 5150
Aptos, CA. 95001
Ph: (707)224-5900

RFI

To: Mark Delgado, SJ Amoroso, 360 Bridge Parkway, Redwood Shores, CA. 94065, Ph: 650-637-7900 Fax: 650-637-7070

RFI #: 93
Date: 01/12/06
Job: 437 Los Medanos College
Phone: 925-427-7057

CC: Chella, Andy (Dowdle & Sons Mechanical, Inc), Beverley, Matt (Dowdle & Sons Mechanical, Inc), Town, Greg (Dowdle & Sons Mechanical, Inc)

Subject: Lab Furnishings

Drawing: LF1-1a @ G/A1 Lines 8 and E/F
Cost Impact:

Spec Section:
Schedule Impact:

Request: Date Required: 1/17/2006
On LF 1-1a @ G/A1 Lines 8 and E/F the lab Furnishings differ from what is shown on P1.2. Will the Lab Casework Alternative shown in the contract drawings remain the same once approved Lab Shop Drawings are produced, as this affects our underslab rough.

Requested by: Matt Freeman, (Dowdle & Sons Mechanical, Inc)

Response:

Answered By:

Company: Date:

Page 1 of 1

Post Date

S. J. AMOROSO
Request For Information/Clarification

DSA FILE NO. 7-C1
DSA APPL. No. 01-106226

To: IBP/Architecture, 1000 Burnett Ave, Suite 140, Concord, CA 94520
Attn: Celia Chiang, Tom Beckett
Fax: 925-246-6495

Project: LOS MEDANOS COLLEGE SCIENCE BUILDING, Contra Costa Community College District
IBP p/n: 20247.00

Subj.: 1-1/2" AV on P1.2
Reference (dwg, spec.) P1.2

RFI No: 470
Subcontractor RFI: Dowdle 38

Reply Requested By: 3/8/06

Date: 3/1/06

INFORMATION REQUESTED:

Please note the attached Dowdle and Son's RFI No. 38 regarding a 1-1/2" AV at 5.75 and F.9 line which is shown to rise above but a LB35x55 is blocking its path. Please advise.

SUGGESTED SOLUTION:

Cost Impact: ☐ Schedule Impact: ☐ days By: Mark Delgado

RESPONSE: DATE: 3.06.06

Reference attached sketches for proposed re-routing.

Attachments: By: D. Weston/AAME

TRANSMITTAL RECORD:

FROM	TO	DATE
S.J. AMOROSO	IBP / ARCHITECTURE	3/1/06
IBP / ARCHITECTURE	ENGINEER/CONSULTANT	3.1.06
ENGINEER/CONSULTANT	IBP / ARCHITECTURE	3.6.06
IBP / ARCHITECTURE	S.J. AMOROSO	3.06.06
S.J. AMOROSO	ORIGINATOR	

RFI # 000
Page 1

Dowdle & Sons Mechanical, Inc.
P.O. Box 5150
Aptos, CA. 95001
Ph: (707)224-5900

RFI

To: Justin Warren, SJ Amoroso, 360 Bridge Parkway, Redwood Shores, CA. 94065, Ph: 650-654-1500 Fax: 650-654-3002

RFI #: 38
Date: 3/1/2006
Job: 437 Los Medanos College
Phone: 925-427-7057

CC:

Subject: 1 1/2" AV

Drawing: P1.2 @ 5.75 and F.9
Cost Impact:

Spec Section:
Schedule Impact:

Request: Date Required: 3/2/2006
On P1.2 @ 5.75 and F.9 an 1-1/2" AV is shown to rise to above. The same vent is shown on P2.2. An LB 35 x 55 on S2.2.2 presently vent runs perpendicular the 2nd floor. Please advise

Requested by: Daryl Freeman, Dowdle & Sons Mechanical, Inc

Response:

Answered By:

Company: Date:

Page 1 of 1

RFI #170
DSA FILE # 7-C1
DSA APPL # 01-106226

BIOLOGY CLASSROOM 130

1 1/2" ICW
1 1/4" SVR
1 1/4" SVR RET.
2" V
3/4" LG
1" LV
3/4" DI

1 1/2" AV, R, T.A.
2" AW, D
1 1/2" AV, D

2" COST
2" COST

EM/SS-1

2" COST

PIPING STUBS FOR CONNECTION BY OTHERS. SEE LR1-1a FOR CONTINUATION.

PARTIAL FIRST FLOOR PLAN
SCALE: 1/4"=1'-0"

SCIENCE BUILDING
LOS MEDANOS COLLEGE
DISTRICT
Contra Costa Community College School District

ARCHITECT
IBP/Architecture, Inc.
1000 Burnett Ave, Suite 140
Concord, CA 94520
p: 925.246.6495 f: 925.246.6496

tBP
Integrated Building Performance

ADMINISTRATION ASSOCIATES
DSA 03-R

RFI Response: 170
DATE: 03/06/06
DSA NO. 01-106226
NO. REVISED IN PART
SHEET: NA
SHEET: S04-170.1

Los Medanos College
4CD Proj. #: L-565-B-23-SC
Science Building

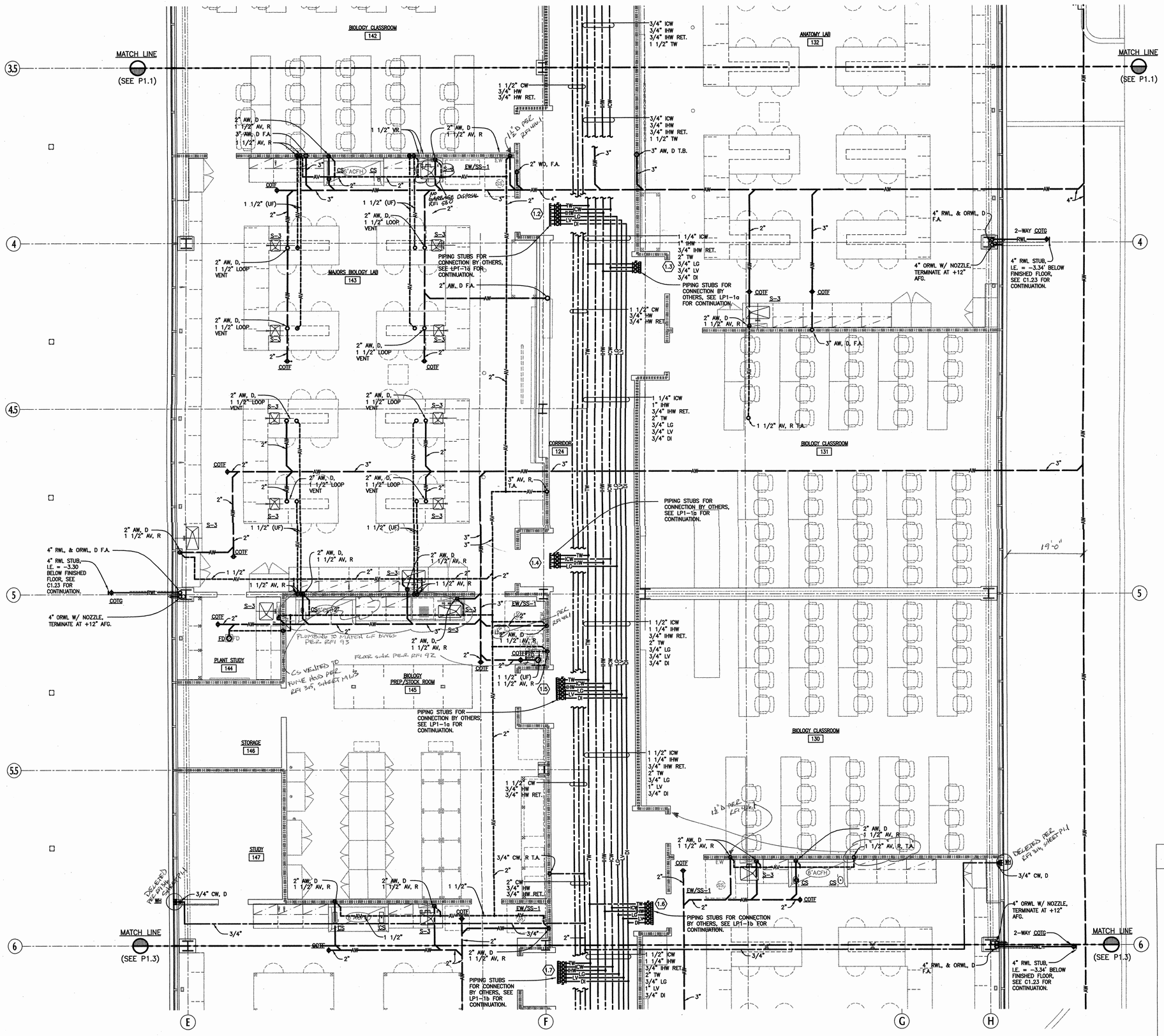

PLUMBING - 1ST FLOOR - PARTIAL PLAN

SCALE: 1/4"=1'-0"

1 / P1.2

KEY PLAN

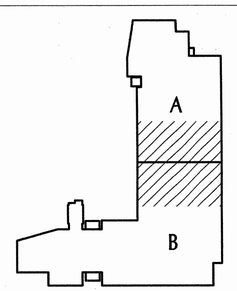

tBP
architecture
planning
interiors
management

tBP/Architecture
1000 Burnett Avenue, Suite 140
Concord, CA 94520
p: 925.246.6419 f: 925.246.6495

architect

AINSWORTH ASSOCIATES
MECHANICAL ENGINEERS
SACRAMENTO, CA
LOS-2005-005

consultant

name
address
city, state, zip
plt fx

agency

SCIENCE BUILDING
LOS MEDANOS COLLEGE

Contra Costa Community College District

owner

tBP project number : 20241.00

file name:

drawn by: checked by:

date: NOVEMBER 15, 2004

Rev:	date:	description:

drawing title:
PLUMBING - 1ST FLOOR - PARTIAL PLAN

LMC SCIENCE 313-023-112.01-0-00.00
drawing no.:
P1.2
drawing of ?

S. J. AMOROSO
Request For Information/Clarification

DSA FILE NO. 7-C1
DSA APPL. No. 01-106226

To: tBP/Architecture
1000 Burnett Ave, Suite 140
Concord, CA 94520

Attn: Celia Chiang, Tom Beckett
Fax: 925-246-6495

Subj.: Floor Drains In Room 128

Reference (dwg, spec): P1.3

Reply Requested By: 1/15/06

Project: LOS MEDANOS COLLEGE
SCIENCE BUILDING
Contra Costa Community College District

tBP p/n: 20247.00

RFI No: **97**
Subcontractor RFI: Dowdle #58

INFORMATION REQUESTED: Date: 1/12/06

Please note the attached Dowdle and Sons RFI No. 58 regarding the floor drains in Room 128. On P1.3 the floor drains are shown to line from East to West. On LP1-1b the floor drains are shown North to South. Please advise.

SUGGESTED SOLUTION:

Cost Impact: ☐ Schedule Impact: ☐ days By: Justin Warren

RESPONSE: DATE: 1/19/06

Locate floor drains in Room 128 as indicated on LP1-1b plan. on the LP1-1b plans.

Attachments:

By: E-DATE/RFD

TRANSMITTAL RECORD:

FROM	TO	DATE
S.J. AMOROSO	tBP / ARCHITECTURE	1/12/06
tBP / ARCHITECTURE	ENGINEER/CONSULTANT	
ENGINEER/CONSULTANT	tBP / ARCHITECTURE	
tBP / ARCHITECTURE	S.J. AMOROSO	
S.J. AMOROSO	ORIGINATOR	

cc: SOM Distributed

RFI # 000
Page 1

Dowdle & Sons Mechanical, Inc.
P.O. Box 5216
Napa, CA 94559
Ph: (707)224-6868

RFI

To: Mark Delgado
SJ Amoroso
360 Bridge Parkway
Redwood Shores, CA 94065
Ph: 925-427-7587 Fax: 925-427-7570

RFI #: 58
Date: 1/09/2006
Job: 437 Los Medanos College
Phone: 925-427-7587

CC: Dowdle_Andi (Dowdle & Sons Mechanical, Inc), Dwadley, Matt (Dowdle & Sons Mechanical, Inc), Trees, Greg (Dowdle & Sons Mechanical, Inc)

Subject: Room 128

Drawing: P1.3
Spec Section:
Cost Impact:
Schedule Impact:

Request: Date Required: 1/17/2006
On P1.3 in Room 128 the Floor Drains are shown to line, East to West. On LP1-1b, in the same room the drains are shown to line, North and South. Please provide exact centerline of Floor Drains to this room from Grid Line, to order to not conflict with Autodesks.

Requested by: Staci Freeman
Dowdle & Sons Mechanical, Inc.

Response:

Approved By

Company Date

Page 1 of 1

S. J. AMOROSO
Request For Information/Clarification

DSA FILE NO. 7-C1
DSA APPL. No. 01-106226

To: tBP/Architecture
1000 Burnett Ave, Suite 140
Concord, CA 94520

Attn: Celia Chiang, Tom Beckett
Fax: 925-246-6495

Subj.: Refrigerators In Resource Rooms 111 and 226
Reference (dwg, spec): P1.3 and P2.3

Reply Requested By: 8/7/06

Project: LOS MEDANOS COLLEGE
SCIENCE BUILDING
Contra Costa Community College District

tBP p/n: 20247.00

RFI No: **307**
Subcontractor RFI: Dowdle 61

INFORMATION REQUESTED: Date: 7/31/06

Please note the attached Dowdle and Sons RFI No. 61 regarding the refrigerators in rooms 111 and 226. Please confirm that they do not require an ice maker box.

SUGGESTED SOLUTION:
Cost Impact: ☐ Schedule Impact: ☐ days By: Justin Warren

RESPONSE: DATE:

Yes, a cold water box is required at these locations.
Provide a 1/2" domestic cold water branch pipe to location and provide a cold water box.

Cold water box to be a "Guy Gray" model BIM 875 (or equal).

Dave Weston/AAHE - 8/01/06

RFI # 000
Page 1

Dowdle & Sons Mechanical, Inc.
P.O. Box 5216
Napa, CA 94559
Ph: (707)224-6868

RFI

To: Mark Delgado
SJ Amoroso
360 Bridge Parkway
Redwood Shores, CA 94065
Ph: 925-427-7587 Fax: 925-427-7570

RFI #: 61
Date: 7/28/2006
Job: 437 Los Medanos College
Phone: 925-427-7587

CC:

Subject: Refrigerators In Room 111 and 226

Drawing:
Spec Section: 15400
Cost Impact: Subject to Response
Schedule Impact: Subject to Response

Request: Date Required: 8/4/2006
Please confirm the refrigerators in Rooms 111 and 226 do not require an Ice Maker Box.

Requested by: Staci Freeman
Dowdle & Sons Mechanical, Inc

Response:

Approved By

Company Date

Page 1 of 1

S. J. AMOROSO
Request For Information/Clarification

DSA FILE NO. 7-C1
DSA APPL. No. 01-106226

To: tBP/Architecture
1000 Burnett Ave, Suite 140
Concord, CA 94520

Attn: Celia Chiang, Tom Beckett
Fax: 925-246-6495

Subj.: Re-locating wall hydrants along south side of building
Reference (dwg, spec.): P1.3, P1.4

Reply Requested By: 8/3/06

Project: LOS MEDANOS COLLEGE
SCIENCE BUILDING
Contra Costa Community College District

tBP p/n: 20247.00

RFI No: **305**
Subcontractor RFI: Dowdle 59

INFORMATION REQUESTED: Date: 7/27/06

On sheet P1.3 at F.9-line and 9-line and on sheet P1.4 at D-line and 8.9-line, wall hydrants are shown in exterior walls. Due to the depth of the frost proof wall hydrants, they cannot be accommodated within the wall framing at these locations. Will it be acceptable to relocate each of these hydrants approximately 2'-0" to the adjacent columns. The framing around these columns will allow for concealment of the wall hydrants.

SUGGESTED SOLUTION:
Cost Impact: ☐ Schedule Impact: ☐ days By: Justin Warren

RESPONSE: DATE:

Two options available as follows:
Option 1: Relocate wall hydrant to location recommended above.
Option 3: Leave wall hydrant at location shown and change from a Zurn model Z1305 (submitted product) to a Zurn model Z1350 Narrow Wally Hydrant (for moderate climate). Due to the location of the project, a non-freeze hydrant is not required.
Note that Contractor can provide either option. Additionally, neither option should have a cost or schedule impact.

Dave Weston/AAHE - 7/31/06

After further study to the location of wall hydrant. In lieu of locate the wall hydrant at south exterior wall of Storage 122, locate wall hydrant at east exterior wall of Storage 122. Wall hydrants shall be at least 1' to exterior metal panel finish to avoid excessive moisture to the metal panel finish. Reference 1/A4-1.

Vanessa Ling/SSP - 8/1/06

RFI # 000
Page 1

Dowdle & Sons Mechanical, Inc.
P.O. Box 5216
Napa, CA 94559
Ph: (707)224-6868

RFI

To: Mark Delgado
SJ Amoroso
360 Bridge Parkway
Redwood Shores, CA 94065
Ph: 925-427-7587 Fax: 925-427-7570

RFI #: 59
Date: 7/28/2006
Job: 457 Los Medanos College
Phone: 925-427-7587

CC:

Subject: Wall Hydrant @ F.9 & 9, and D & 8.9

Drawing:
Spec Section:
Cost Impact: Subject to Response
Schedule Impact: Subject to Resonse

Request: Date Required: 8/3/2006
At F.9 & 9 and D & 8.9 Wall Hydrants are shown. Due to the depth of the Frost Proof Wall Hydrants they cannot be concealed in the framing at this location. Will it be acceptable to move each of the Wall Hydrants approximately 2'-0" toward the adjacent column? The framing around these columns will allow for concealment of the Wall Hydrants.

Requested by: Staci Freeman
Dowdle & Sons Mechanical, Inc

Response:

Approved By

Company Date

Page 1 of 1

Los Medanos College
4CD Proj. #: L-565-B-23-SC
Science Building

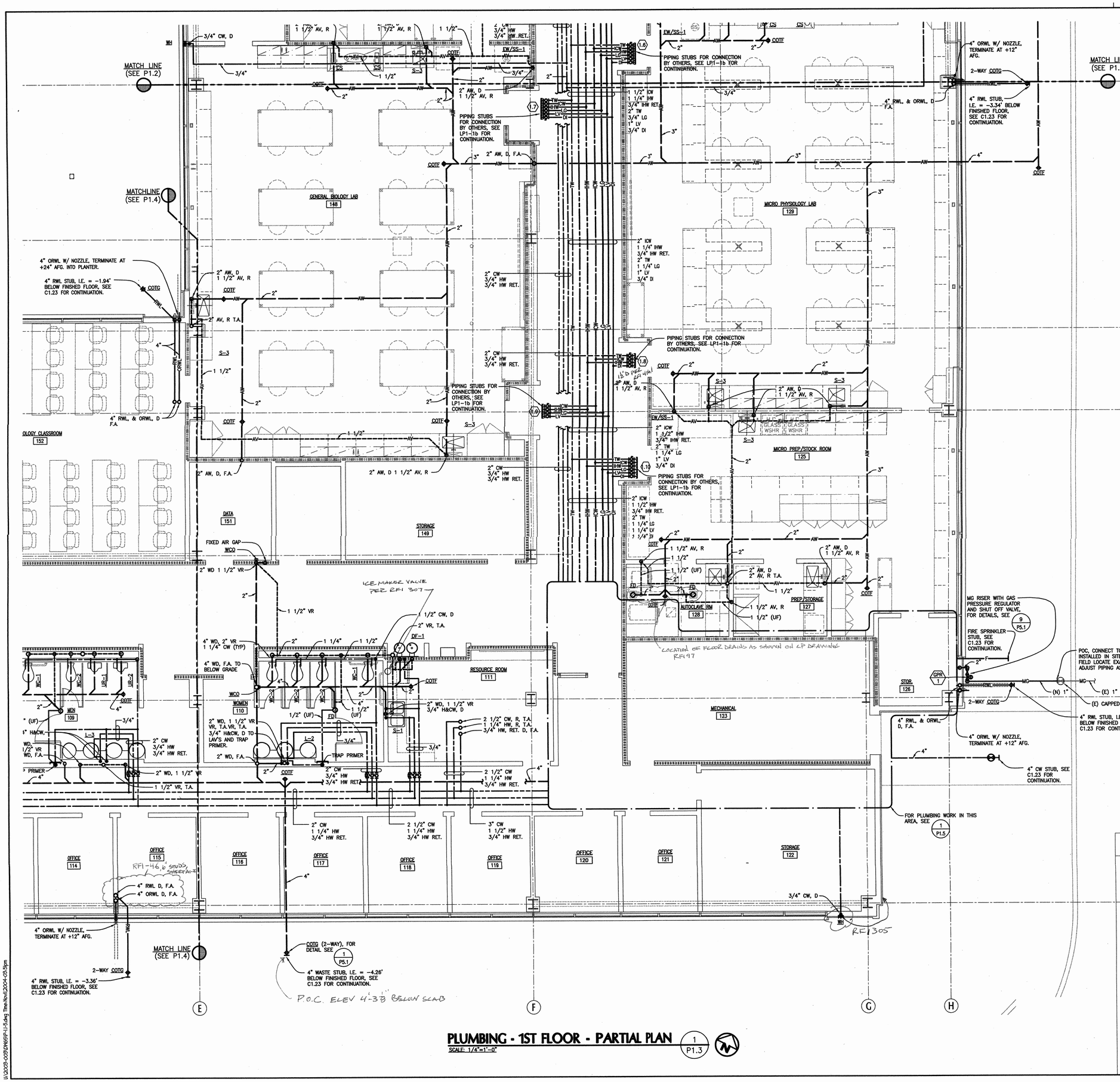

NOTE:
FIRE SPRINKLER PIPING IS DEFERRED APPROVAL.

PLUMBING - 1ST FLOOR - PARTIAL PLAN

1/P1.3

SCALE: 1/4"=1'-0"

KEY PLAN

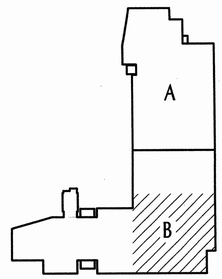

tBP architecture planning interiors management

tBP/Architecture
1000 Burnett Avenue, Suite 140
Concord, CA 94520
p: 925.246.6419 f: 925.246.6495

architect

AINSWORTH ASSOCIATES
MECHANICAL ENGINEERS
SACRAMENTO, CA
J05:2005-005

consultant

name
address
city, state, zip
ph: fx:

agency

SCIENCE BUILDING
LOS MEDANOS COLLEGE

Contra Costa Community College District

owner

tBP project number : 202471.00

file name:

drawn by: checked by:

date: NOVEMBER 15, 2004

Rev:	date:	description:

drawing title:
PLUMBING - 1ST FLOOR - PATIAL PLAN

LMC SCIENCE 313-023-112.01-0-00.00

drawing no.: **P1.3**

drawing of ?

AAAAB 6/1

S. J. AMOROSO
Request For Information/Clarification

DSA FILE NO. 7-C1
DSA APPL. No. 01-106226

To: IBP/Architecture
1000 Burnett Ave, Suite 140
Concord, CA 94520

Project: LOS MEDANOS COLLEGE
SCIENCE BUILDING
Contra Costa Community College District

Attn: Celia Chiang, Tom Beckett
Fax: 925-246-6495

IBP ph: 20247.00

Subj.: Domestic Water Mains on 8 to 8.5 Lines

RFI No: **116**

Reference (dwg, spec): Subcontractor RFI#

Reply Requested By: 2/8/06

INFORMATION REQUESTED: Date: 2/1/06
Please note the attached Dowdle and Sons RFI No. 29 regarding domestic water mains exposed between 8 and 8.5 lbs at C/D lines. This pipe will be supported by the Roof Deck along with seismic braces. Please advise and provide sketch if necessary.
SUGGESTED SOLUTION:

Cost Impact: ☐ Schedule Impact: ☐ days By: Mark Delgado

RESPONSE: DATE:

Author: Gerstein
Subject: Note
Date: 2/6/2006 1:53:48 PM
Copying should not be installed exposed. We have piping north (around Elevator #1) so that piping is not exposed within Lobby 101. Sketch is required, please re-submit RFI with request.

Attachments:

By:

TRANSMITTAL RECORD:

FROM	TO	DATE
S.J. AMOROSO	IBP / ARCHITECTURE	2/1/06
IBP / ARCHITECTURE	ENGINEER/CONSULTANT	
ENGINEER/CONSULTANT	IBP / ARCHITECTURE	
IBP / ARCHITECTURE	S.J. AMOROSO	
S.J. AMOROSO	ORIGINATOR	

RFI # 000
Page 1

Dowdle & Sons Mechanical, Inc.
P.O. Box 3248
Plaza, CA 94508
Ph: (707)224-6494

RFI

To: Judith Warren
S.J.Amoroso
360 Bridge Parkway
Richmond Shores, CA 94585
Ph: 800-954-1000 Fax: 800-954-9002

RFI #: 29
Date: 1/31/2006
Job: 457 Los Medanos College
Phone: 925-427-7987

CC: Delgado, Mark (S.J.Amoroso), Dowdle, Andy (Dowdle & Sons Mechanical, Inc), Gearhey, Matt (Dowdle & Sons Mechanical, Inc), Tom, Greg (Dowdle & Sons Mechanical, Inc)

Subject: Exposed Domestic Water Mains

Drawing: P1.4 Spec Section:
Cost Impact: Schedule Impact:

Request: Date Required: 2/10/2006
P.14 shows domestic water mains exposed between 8 and 8.5 @ C/D Lines. Support for this piping would be from Roof Deck along with required seismic bracing. Please clarify.

Requested by: Stan Freeman
Dowdle & Sons Mechanical, Inc

Response:

Assessed By:

Category: Date:

Page 1 of 1

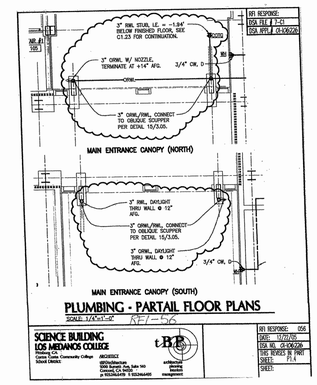

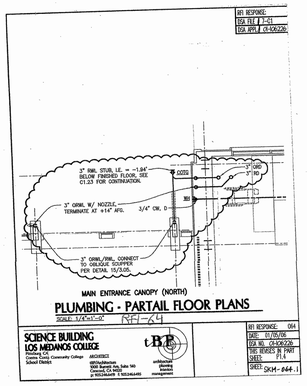

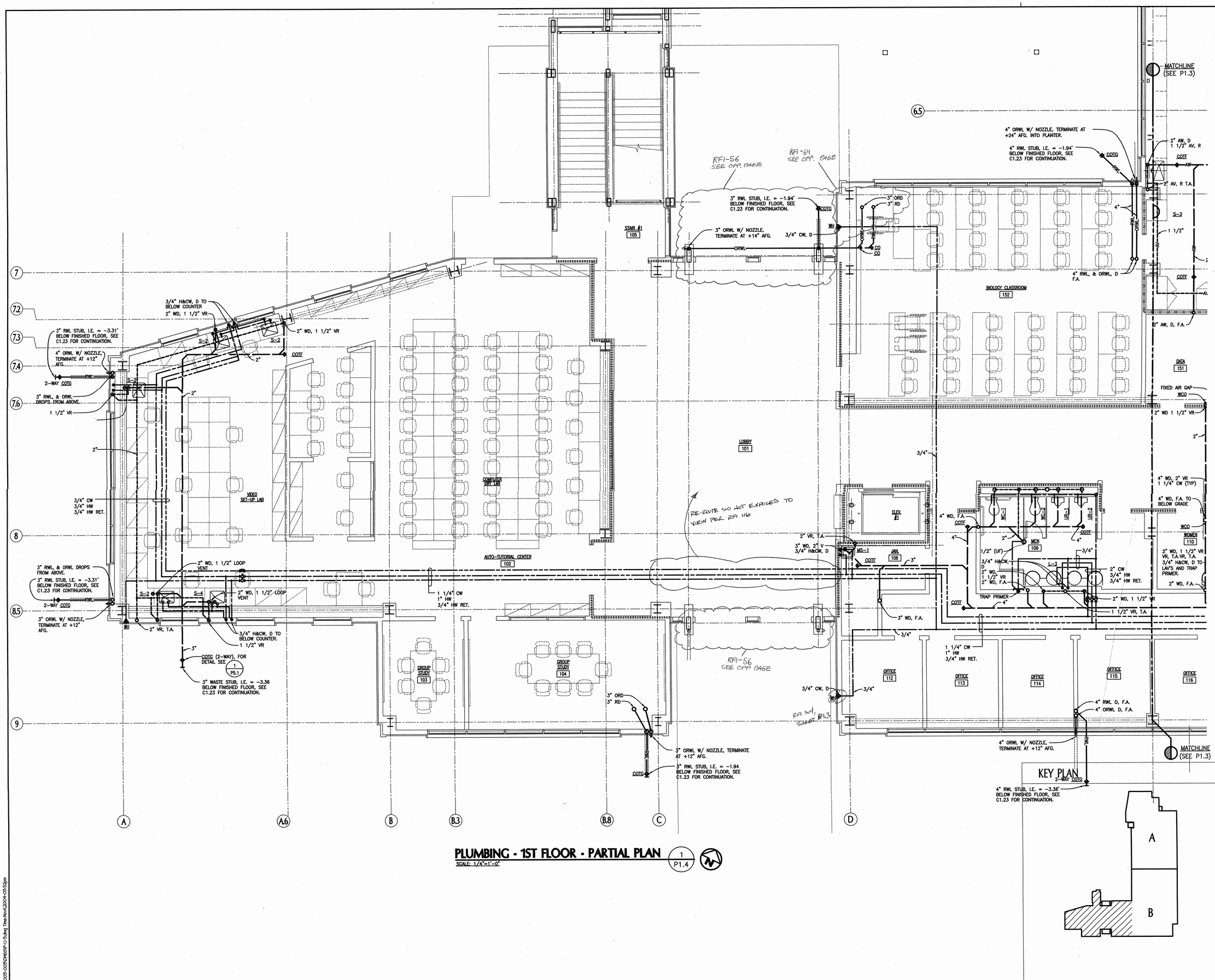

PLUMBING - 1ST FLOOR - PARTIAL PLAN

SCALE: 1/4"=1'-0"

1 / P1.4

tBP architecture planning interiors management

tBP/Architecture
1000 Burnett Avenue, Suite 140
Concord, CA 94520
p: 925.246.6419 f: 925.246.6495

architect

AINSWORTH ASSOCIATES
MECHANICAL ENGINEERS
SACRAMENTO, CA
JOB: 2003-008

consultant

IDENTIFICATION STAMP
DIV. OF THE STATE ARCHITECT
OFFICE OF REGULATION SERVICES
APPL - 04190026
AC
DATE 1-12-05

name
address
city, state, zip
ph: fx:

agency

SCIENCE BUILDING
LOS MEDANOS COLLEGE

Contra Costa Community College District

owner

tBP project number : 20241.00

file name:

drawn by: checked by:

date: NOVEMBER 15, 2004

Rev:	date:	description:

drawing title:
PLUMBING - 1ST FLOOR - PARTIAL PLAN

LMC SCIENCE 313-023-112.01-0-00.00
drawing no.:
P1.4
drawing of ?

S. J. AMOROSO
Request For Information/Clarification

DSA FILE NO. 7-C1
DSA APPL. No. 01-106226

To: IBP/Architecture, 1000 Burnett Ave, Suite 140, Concord, CA 94520
Attn: Celia Chiang, Tom Beckett
Fax: 925-246-6495
Subj.: Coordinates for underground fire line to extend into mechanical room 123
Reference (dwg, spec): P1.3, P1.5
Reply Requested By: 2/21/06

Project: LOS MEDANOS COLLEGE SCIENCE BUILDING, Contra Costa Community College District
IBP phn: 20247.00
RFI No: 143
Subcontractor RFI#

INFORMATION REQUESTED: Date: 2/13/06

As discussed at last week's project meeting and subsequently, the routing of the underground fire line into the building as well as the location of the riser as shown on the drawings is not in keeping with end user/ architect preferences. Therefore, please provide the desired routing as well as location of riser with dimensions from G-line and 8-line.

SUGGESTED SOLUTION:

Cost Impact: ☐ Schedule Impact: ☐ days By: Mark Delgado

RESPONSE: DATE: 2.17.06

See attached SKA-143.1 and SKA-143.2 for proposed route of fire sprinkler main underground into Mechanical room and proposed location of Riser from Mechanical room to second floor. Contractor to coordinate riser location to avoid conflict with fireproofed structural steel column, beam and acoustic wall at room 124. See sketches for additional notes.
2.27.06 AMENDED RESPONSE: Provide underground piping of mild steel with welded fittings and product per spec section 15400, paragraph 3.02C, as previously noted.

Attachments: By: C. Chiang/tsf

TRANSMITTAL RECORD:

FROM	TO	DATE
S.J. AMOROSO	IBP / ARCHITECTURE	2/9/06
IBP / ARCHITECTURE	ENGINEER/CONSULTANT	
ENGINEER/CONSULTANT	IBP / ARCHITECTURE	
IBP / ARCHITECTURE	S.J. AMOROSO	2.17.06
S.J. AMOROSO	ORDINATOR	

RFI # 000
Page 1

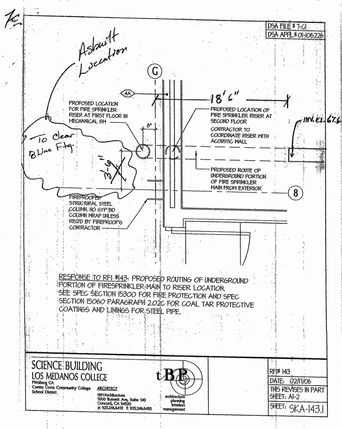

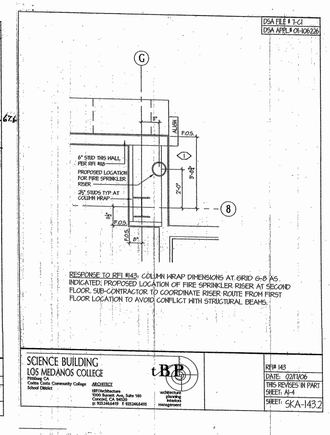

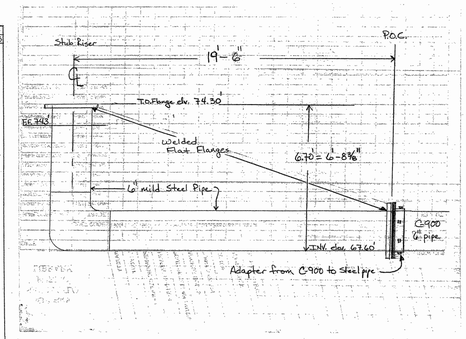

S. J. AMOROSO
Request For Information/Clarification

DSA FILE NO. 7-C1
DSA APPL. No. 01-106226

To: IBP/Architecture, 1000 Burnett Ave, Suite 140, Concord, CA 94520
Attn: Celia Chiang, Tom Beckett
Fax: 925-246-6495
Subj.: No drain line for S-1 in room 226.
Reference (dwg, spec.) P2.3, P1.3, P1.5
Reply Requested By: 3/9/06

Project: LOS MEDANOS COLLEGE SCIENCE BUILDING, Contra Costa Community College District
IBP phn: 20247.00
RFI No: 178
Subcontractor RFI: Dowdle 39

INFORMATION REQUESTED: Date: 3/2/06

On sheet P2.3, a sink S-1 is shown at F.5 and 8.2 lines. The 2" sanitary sewer shown is not depicted below on sheets P1.3 or P1.5. Please advise where this line is to terminate.

SUGGESTED SOLUTION:

Cost Impact: ☐ Schedule Impact: ☐ days By: Mark Delgado

RESPONSE: DATE: 3.6.06

2" sanitary sewer line to drop at location indicated, drop within south wall of mechanical room, then connect to 4" sanitary sewer just south of mechanical room (see sheet P1.5).

Attachments: By: D. Weston/KANE

TRANSMITTAL RECORD:

FROM	TO	DATE
S.J. AMOROSO	IBP / ARCHITECTURE	3/2/06
IBP / ARCHITECTURE	ENGINEER/CONSULTANT	3.3.06
ENGINEER/CONSULTANT	IBP / ARCHITECTURE	3.6.06
IBP / ARCHITECTURE	S.J. AMOROSO	3.6.06
S.J. AMOROSO	ORDINATOR	

RFI # 000
Page 1

S. J. AMOROSO
Request For Information/Clarification

DSA FILE NO. 7-C1
DSA APPL. No. 01-106226

To: IBP/Architecture, 1000 Burnett Ave, Suite 140, Concord, CA 94520
Attn: Celia Chiang, Tom Beckett
Fax: 925-246-6495
Subj.: Vibration pads at Science Building Equipment
Reference (dwg, spec.): none
Reply Requested By: 11/6/06

Project: LOS MEDANOS COLLEGE SCIENCE BUILDING, Contra Costa Community College District
IBP phn: 20247.00
RFI No: 421
Subcontractor RFI:

INFORMATION REQUESTED: Date: 11/2/06

We have received the attached IBP memo addressing vibration pads at Science Building Equipment.

First, the air compressor and vacuum pump mentioned have been installed and piped for some time. The pads were installed directly to the concrete. The equipment is not bolted down. To install the waffled pads now would require that the equipment be lifted off the pad, new (longer) bolts installed, the pads added and the equipment reset and re-piped.

The memo goes on to direct that the waffle pads be installed below "other pumps, etc. that may cause vibration transmission through the slab." However details 8 and 9 on M1.2 explicitly state that the chilled water pump and condenser water pump frames are to be grouted after installation.

Please provide explicit direction on which equipment is to be installed directly to concrete, installed with waffle pads, or grouted.

SUGGESTED SOLUTION:

Cost Impact: ☐ Schedule Impact: ☐ days By: Mark Delgado

RESPONSE: DATE:

THE AIR COMPRESSOR HAS BEEN ANCHORED — BUT NOT PIPED AS YET. THE VACUUM PUMP IS ANCHORED AND PIPED — BUT THE MOTOR HAS WHITE RUBBER MOUNTS.
THEREFORE WE ARE RECOMMENDING THAT THE WAFFLED PADS BE INSTALLED AT THE AIR COMPRESSOR ANCHORAGE ONLY.
11-16-06

RFI # 000
Page 1

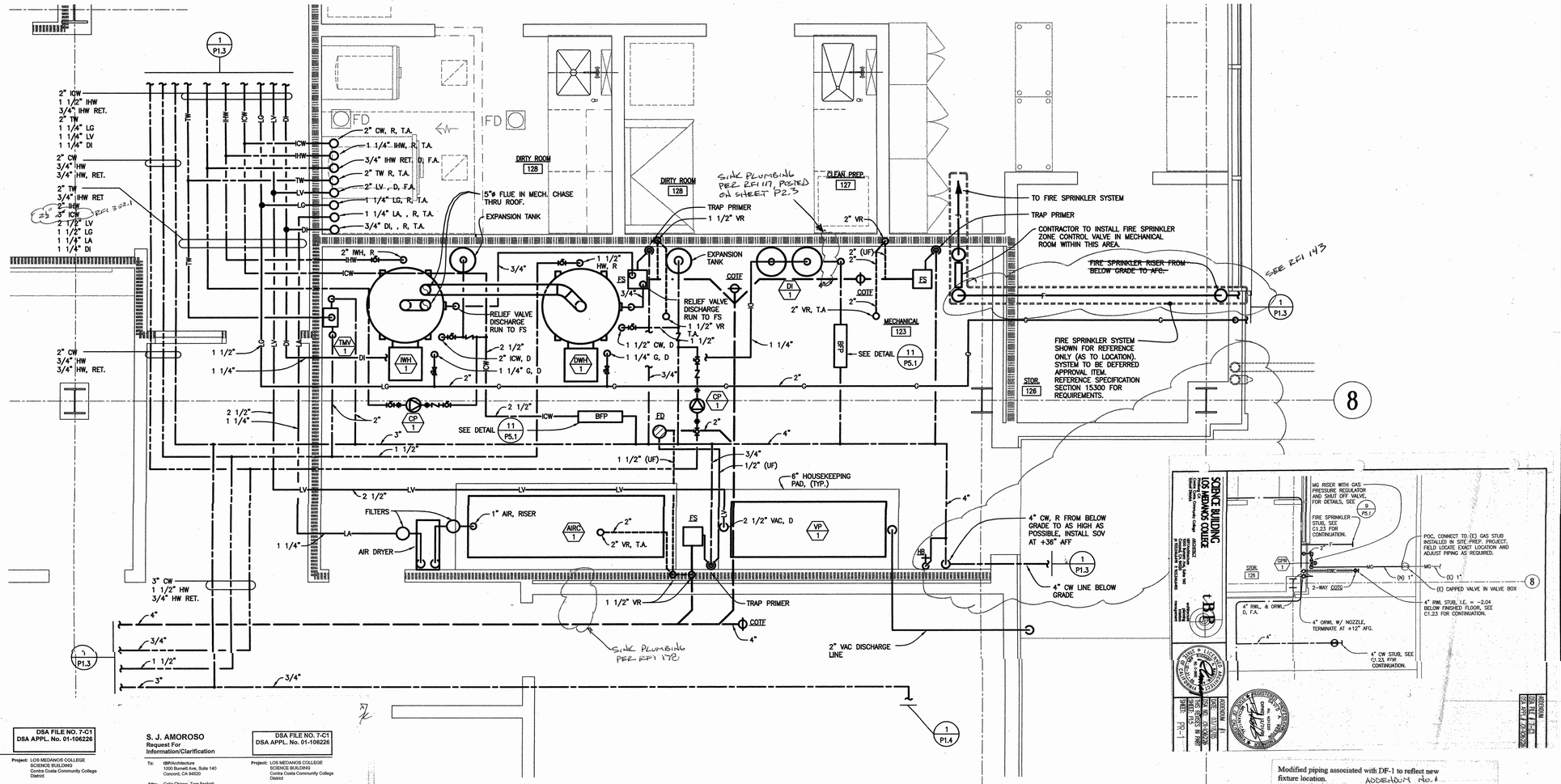

PLUMBING - MECHANICAL ROOM FLOOR PLAN

SCALE: 1/2"=1'-0"

1 P1.5

Modified piping associated with DF-1 to reflect new fixture location. ADDENDUM No. 1

S. J. AMOROSO
Request For Information/Clarification

DSA FILE NO. 7-C1
DSA APPL. No. 01-106226

To: tBP/Architecture, 1000 Burnett Ave, Suite 140, Concord, CA 94520
Project: LOS MEDANOS COLLEGE SCIENCE BUILDING, Contra Costa Community College District
Attn: Celia Chiang, Tom Beckett
Fax: 925-246-6495
tBP p/n: 20247.00
Subj.: ICW sizing
RFI No: 352
Subcontractor RFI: Dowdle 65
Reference (dwg, spec.): P1.5
Reply Requested By: 9/28/06

INFORMATION REQUESTED: Date: 9/21/06

On P1.5, at F.5 and 8.1, a back flow preventer is shown. This ICW line is shown to be 2.1/2". This supplies the IWH-1 and the ICW to the Building. The ICW that feeds the Building is shown to be 3". This is depicted on F-line of this page. Is the pipe sizing of the ICW described correct? Please advise.

SUGGESTED SOLUTION:
Cost Impact: ☐ Schedule Impact: ☐ days By: Mark Delgado

RESPONSE: DATE:

Per review of RFI, it appears that there above statement is incorrect.
Per AAME's review, the water line sizes are as follows:

1. 4" CW enters the east side of the mechanical room.
2. 1ST Branch - 3/4" CW branch line to trap primer (north wall)
3. 2ND Branch - 1 1/4" CW to DI system.
4. 3RD Branch - 3/4" CW branch line to trap primer (south wall)
5. 4TH Branch - 1 1/2" CW line to DWH/1
6. 5TH Branch - 3/4" CW branch line to trap primer (north wall)
7. 6TH Branch - 2 1/2" CW branch to backflow preventor
8. 7TH Branch - 2" CW branch line to mixing valve.
9. 3" CW line leaves west side of mechanical room.

Per our review, the ICW feeding the building is 2 1/2", not 3" as stated above.
Note that the domestic CW feeding the building is 3" (as it leaves the mechanical room).

Dave Weston/AAME - 9/22/06

RFI # 000
Page 1

S. J. AMOROSO
Request For Information/Clarification

DSA FILE NO. 7-C1
DSA APPL. No. 01-106226

To: tBP/Architecture, 1000 Burnett Ave, Suite 140, Concord, CA 94520
Project: LOS MEDANOS COLLEGE SCIENCE BUILDING, Contra Costa Community College District
Attn: Celia Chiang, Tom Beckett
Fax: 925-246-6495
tBP p/n: 20247.00
Subj.: ICW sizing, 2nd time around
RFI No: 352.1
Subcontractor RFI: Dowdle 65
Reference (dwg, spec.): P1.5
Reply Requested By: 9/28/06

INFORMATION REQUESTED: Date: 10/2/06 tBP received 10/13/06

See attached photocopy partial plan of sheet P1.5 with ICW pipe sizes circled so as to be as easy to read as possible. Note that Dowdle's original question is, in fact, correct. The ICW pipe size goes from 4" to 2 1/2" to 3". That is why the question was asked in the original RFI 352. Note that SJA/Dowdle were simply trying to be proactive and address a very unusual situation in the plans INSTEAD of simply, blindly following the drawings and perhaps constructing things that are per plan, but not what the end user actually needs.

Therefore, please re-review the question posed in RFI 352 and answer the question posed in RFI 352.

Also, please let us know if, in the future, we should simply build to the plans and not ask these types of questions.

SUGGESTED SOLUTION:
Cost Impact: ☐ Schedule Impact: ☐ days By: Mark Delgado

RESPONSE: DATE:

Per further review, the ICW line labeled as a 3" ICW (at grid line F) should be a 2 1/2" ICW line.
Install line as 2 1/2" accordingly.

Sorry for any confusion. (Note: RFI received by AAME on 10/16/06).

Dave Weston/AAME - 10/16/06

RFI # 000
Page 1

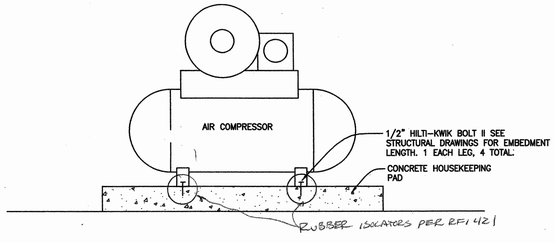

AIR COMPRESSOR DETAIL

NO SCALE

2 P1.5

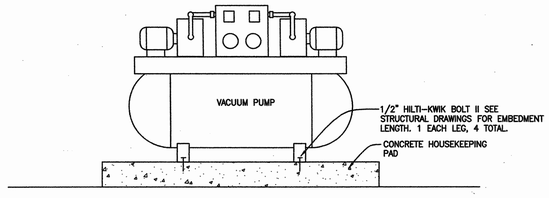

VACUUM PUMP DETAIL

NO SCALE

3 P1.5

tBP
architecture
planning
interiors
management
tBP/Architecture
1000 Burnett Avenue, Suite 140
Concord, CA 94520
p: 925.246.6419 f: 925.246.6495
architect

AINSWORTH ASSOCIATES
MECHANICAL ENGINEERS
SACRAMENTO, CA
consultant

name
address
city, state, zip
ph:
agency

SCIENCE BUILDING
LOS MEDANOS COLLEGE

Contra Costa Community College District

owner

tBP project number : 20241.00
file name:
drawn by: checked by:
date: NOVEMBER 15, 2004

Rev:	date:	description:

drawing title:
PLUMBING - MECHANICAL ROOM FLOOR PLAN

LMC SCIENCE 313-023-T12.01-0-00.00
drawing no.:
P1.5
drawing of ?

S. J. AMOROSO
Request For Information/Clarification

DSA FILE NO. 7-C1
DSA APPL. No. 01-106226

To: tBP/Architecture
1000 Burnett Ave, Suite 140
Concord, CA 94520

Attn: Celia Chiang, Tom Beckett
Fax: 925-246-6495

Project: LOS MEDANOS COLLEGE
SCIENCE BUILDING
Contra Costa Community College District

tBP p/n: 20247.00

Subj.: Fixed Air Gap on P2.1

RFI No: **88**

Reference (dwg, spec): P2.1

Subcontractor RFI: Dowdle 18

Reply Requested By: 1/17/06

INFORMATION REQUESTED: Date: 1/10/06
Please note the attached Dowdle and Son's RFI No. 18 regarding the fixed air gap on P2.1 and wall clean out that are shown in a 2 hour wall.

SUGGESTED SOLUTION: Dowdle recommends omitting this air gap and route condensate to air gap at first floor at room 137. Please advise.

Cost Impact: ☐ Schedule Impact: ☐ days By: Justin Warren

RESPONSE: DATE:

Attachments: By:

TRANSMITTAL RECORD:

FROM	TO	DATE
S.J. AMOROSO	tBP / ARCHITECTURE	1/10/06
tBP / ARCHITECTURE	ENGINEER/CONSULTANT	
ENGINEER/CONSULTANT	tBP / ARCHITECTURE	
tBP / ARCHITECTURE	S.J. AMOROSO	
S.J. AMOROSO	ORIGINATOR	

RFI # 000
Page 1

Summary of Comments on AAME-Response-RFI No. 88.pdf

Page: 1

Sequence number: 1
Author: Dearden
Subject: Note
Date: 1/10/2006 10:49:54 AM
Justin Warren's recommendation of omitting fixed air gap and routing condensate to air gap @ 1ST floor (room 137) is acceptable.
Contractor to show proposed re-routing within coordinated shop drawings.

S. J. AMOROSO
Request For Information/Clarification

DSA FILE NO. 7-C1
DSA APPL. No. 01-106226

To: tBP/Architecture
1000 Burnett Ave, Suite 140
Concord, CA 94520

Attn: Celia Chiang, Tom Beckett
Fax: 925-246-6495

Project: LOS MEDANOS COLLEGE
SCIENCE BUILDING
Contra Costa Community College District

tBP p/n: 20247.00

Subj.: Tempered Water Termination on 2nd Flr.

RFI No: **89**

Reference (dwg, spec): P1.1, P2.1

Subcontractor RFI: Dowdle 19

Reply Requested By: 1/17/06

INFORMATION REQUESTED: Date: 1/10/06
Please note the attached Dowdle and Son's RFI No. 19 regarding the tempered water at the 2nd floor which terminates in Room 206 without a return line. Please advise.

SUGGESTED SOLUTION:

Cost Impact: ☐ Schedule Impact: ☐ days By: Justin Warren

RESPONSE: DATE:

Attachments: By:

TRANSMITTAL RECORD:

FROM	TO	DATE
S.J. AMOROSO	tBP / ARCHITECTURE	1/10/06
tBP / ARCHITECTURE	ENGINEER/CONSULTANT	
ENGINEER/CONSULTANT	tBP / ARCHITECTURE	
tBP / ARCHITECTURE	S.J. AMOROSO	
S.J. AMOROSO	ORIGINATOR	

RFI # 000
Page 1

Summary of Comments on AAME-Response-RFI No. 89.pdf

Page: 1

Sequence number: 1
Author: Dearden
Subject: Note
Date: 1/10/2006 10:48:40 AM
We recommend adding a balance valve and a check valve on second floor between tempered water and industrial hot water return 1" line. Valves to be within Corridor241 where pipe race enters room 236 (near the shut-off valves within this area).

7C

Dowdle & Sons Mechanical, Inc.
P.O. Box 5070
Napa, CA 94558
Ph: (707)224-5469

RFI

To: Mark Delgado
SJ Amoroso
300 Bridge Parkway
Redwood Shores, CA 94065
Ph: 925-427-7567 Fax: 925-427-7570

RFI #: 97
Date: 7/28/2006
Job: 437 Los Medanos College
Phone: 925-427-7567

CC:

Subject: Confirming RFI

Drawing: P2.1
Cost Impact: Subject to Response

Spec Section:
Schedule Impact: Subject to Response

Request: Date Required: 8/2/2006
Per conversation w/ Dave Weeks, the Floor Drain on P2.1 is to be eliminated. The drain for the ice machine at this location will now be routed to the fixed air gap fitting directly below on the 1st Floor.

Requested by: Staci Freeman
Dowdle & Sons Mechanical, Inc

Response:

Answered By

Company

Date

Page 1 of 1

S. J. AMOROSO
Request For Information/Clarification

DSA FILE NO. 7-C1
DSA APPL. No. 01-106226

To: tBP/Architecture
1000 Burnett Ave, Suite 140
Concord, CA 94520

Attn: Celia Chiang, Tom Beckett
Fax: 925-246-6495

Project: LOS MEDANOS COLLEGE
SCIENCE BUILDING
Contra Costa Community College District

tBP p/n: 20247.00

Subj.: Eliminate FD in room 236

RFI No: **303**

Reference (dwg, spec.): P2.1

Subcontractor RFI: Dowdle 57

Reply Requested By: 8/3/06

INFORMATION REQUESTED: Date: 7/27/06

This RFI is written to confirm a conversation between Dowdle and Sons and the mechanical engineer. Per that conversation, we are to eliminate the FD near the north wall of room 236 and the drain for the OFGI ice machine in this location will now be routed to the fixed air gap fitting directly below the 1st floor. Please confirm.

SUGGESTED SOLUTION:
Cost Impact ☐ Schedule Impact: ☐ days By: Justin Warren

RESPONSE: DATE:

Conversation is confirmed. Per conversation with Dowdle & Sons - the floor sink is in conflict with the structure at the location shown. Drain can be routed to fixed air gap on 1ST Floor.

Note that this RFI should not result in a cost or schedule impact.

Dave Weeks/AAME
7/31/06

RFI # 000
Page 1

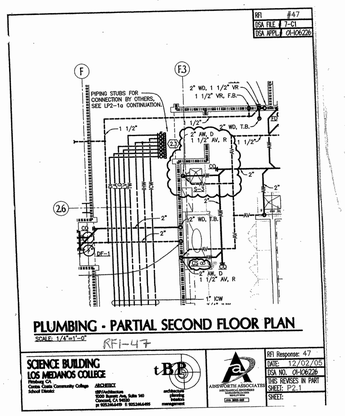

PLUMBING - PARTIAL SECOND FLOOR PLAN

SCALE: 1/4"=1'-0"

RFI-47

SCIENCE BUILDING LOS MEDANOS COLLEGE Pittsburg, Contra Costa Community College School District	ARCHITECT tBP/Architecture 1000 Burnett Ave, Suite 140 Concord, CA 94520 p: 925.246.6495 f: 925.246.6499
tBP architecture building performance management	ASSOCIATED ARCHITECTS DSA 99C-00
RFI Response: 47 DATE: 12/07/05 DSA NO. 01-106226 tBC REVISES IN PART SHEET: P2.1 DATE:	

Los Medanos College
4CD Proj. #: L-565-B-23-SC
Science Building

Drawing notes "cut-off" on original drawings. Notes clarified on addendum drawing PR-2. ADDENDUM No. 1

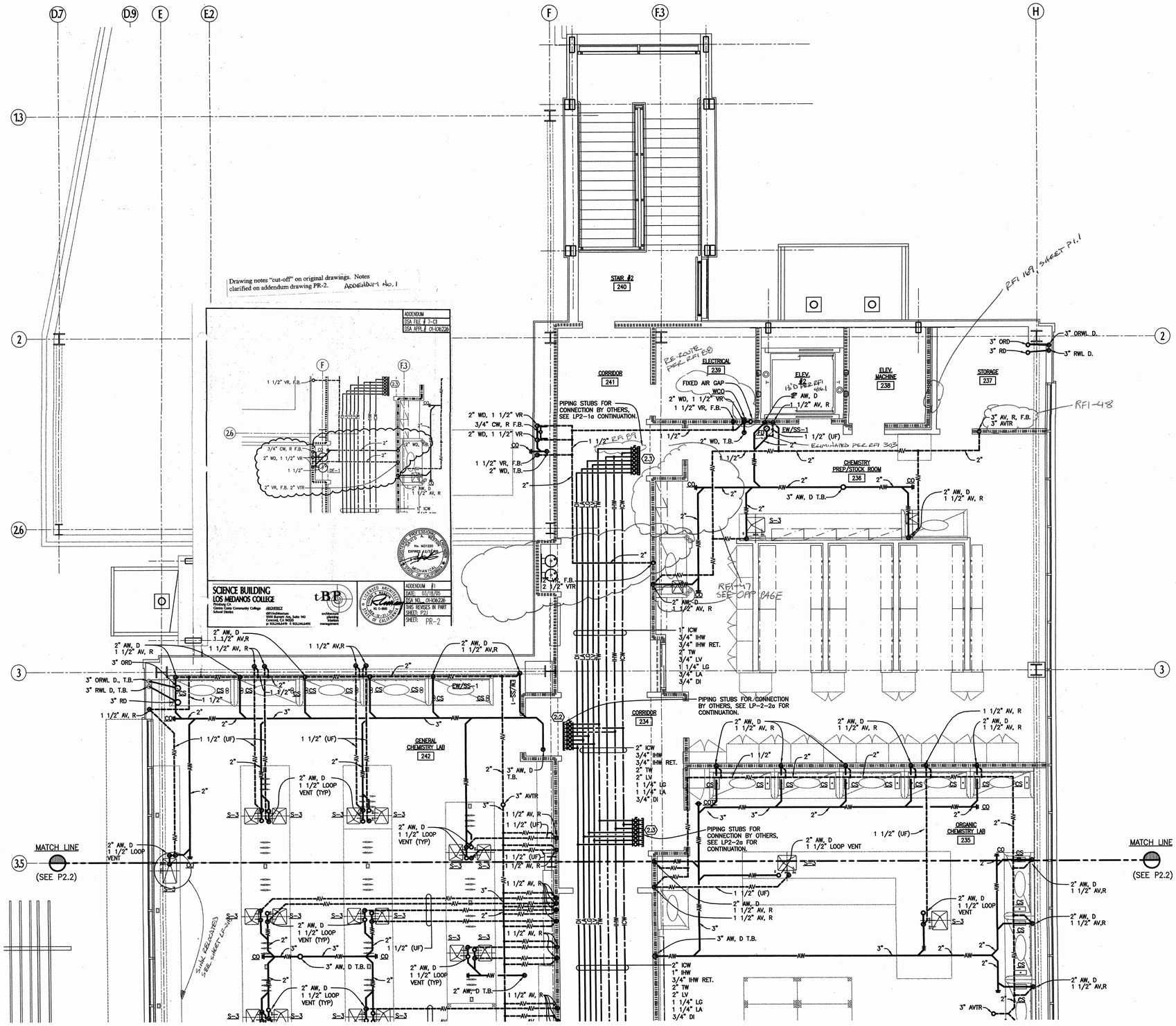

PLUMBING - 2ND FLOOR - PARTIAL PLAN

1 / P2.1

SCALE: 1/4"=1'-0"

KEY PLAN

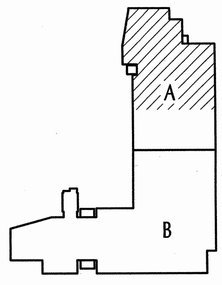

tBP/Architecture
1000 Burnett Avenue, Suite 140
Concord, CA 94520
p: 925.246.6419 f: 925.246.6495
architect

AINSWORTH ASSOCIATES
MECHANICAL ENGINEERS
SACRAMENTO, CA
(916) 929-0915
consultant

EXPIRATION STAMP
DO NOT REMOVE PER
OFFICE OF REGULATION SERVICES
RFI - 69/48/47
DATE 1-11-05

name
address
city, state, zip
ph: fx:
agency

SCIENCE BUILDING
LOS MEDANOS COLLEGE

Contra Costa Community College District
owner

tBP project number : 20241.00
file name:
drawn by: checked by:
date: NOVEMBER 15, 2004

Rev:	date:	description:

drawing title:
PLUMBING - 2ND FLOOR - PARTIAL PLAN

LMC SCIENCE 313-023-T12.01-0-00.00
drawing no.:
P2.1
drawing of ?

G:\2003-0039\DWG\P-2-1-4.dwg Time:Nov/1/2004-03:52pm

S. J. AMOROSO
Request For Information/Clarification

DSA FILE NO. 7-C1
DSA APPL. No. 01-106228

To: IBP/Architecture
1000 Burnett Ave, Suite 140
Concord, CA 94520

Attn: Celia Chiang, Tom Beckett
Fax: 925.346.6485

Project: LOS MEDANOS COLLEGE
SCIENCE BUILDING
Contra Costa Community College District

IBP p/n: 20247.00

Subj: Change alcove wall to 6" stud at north entrance to room 245
Reference (dwg, spec.):A1-4, P2-2, LF2-1a

RFI No: **300**
Subcontractor RFI:

Reply Requested By: 7/20/06

INFORMATION REQUESTED: Date: 7/26/06

Note that on sheet P2-2, near the northern entrance to room 245, a 3" AVR is shown in the corridor wall. However, this AVR would be in conflict with the T-line beam above this corridor wall. Therefore, we propose re-locating the AVR to rise up in the east-west alcove wall near door 249. Once into the 1st floor ceiling space, the AVR can be routed to it's "correct" roof penetration location. In order to accomplish this, the alcove wall would need to be increased form 4" studs to 6" studs. We have discussed this with our lab casework subcontractor and we believe that this wall can "grow" into the lab by 2" and that the casework can "absorb" these two inches in the KO panel located at the F/5 column. Please confirm the stud size increase.

SUGGESTED SOLUTION:
Cost Impact: ☐ **Schedule Impact:** ☐ days **By:** Justin Warren

RESPONSE: **DATE:**

No exception taken to relocate the 3" AVR to the south wall of alcove at Door #249 and revise the wall to a 6" stud wall. Contractor to coordinate with lab casework with this revision as noted above.

Vanessa Ling/SBP
7/31/06

RFI # 000
Page 1

Los Medanos College
4CD Proj. #: L-565-B-23-SC
Science Building

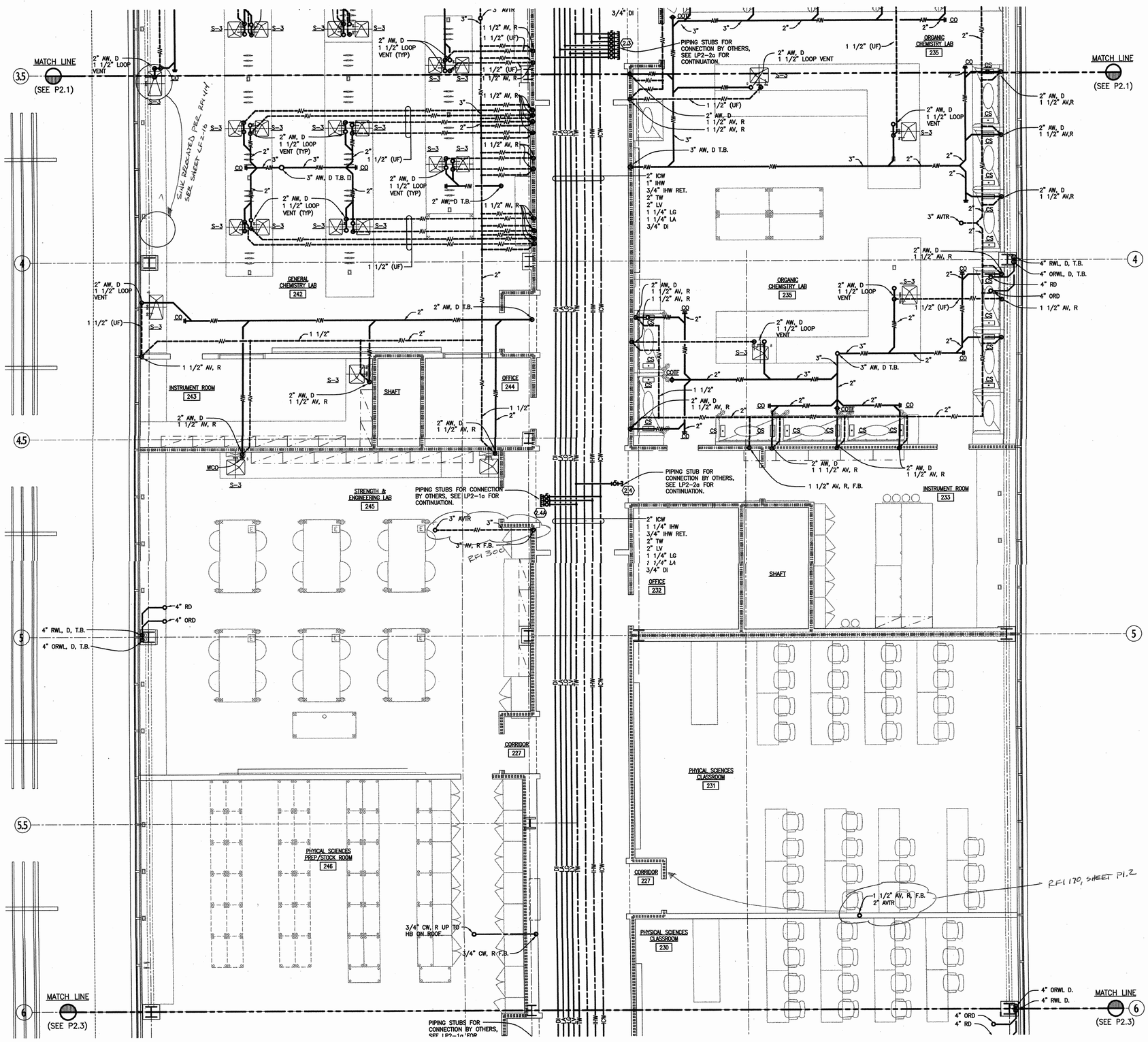

PLUMBING - 2ND FLOOR - PARTIAL PLAN

SCALE: 1/4"=1'-0"

1 / P2.2

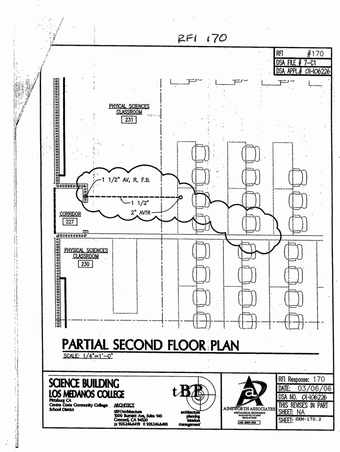

KEY PLAN

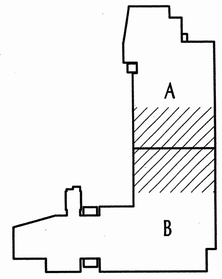

tBP
architecture
planning
interiors
management

tBP/Architecture
1000 Burnett Avenue, Suite 140
Concord, CA 94520
p: 925.246.6419 f: 925.246.6495

architect

AINSWORTH ASSOCIATES
MECHANICAL ENGINEERS
SACRAMENTO, CA
(25) 2009-029

consultant

DSA CERTIFICATION STAMP
DIV. OF THE STATE ARCHITECT
APP. # 09-109209
DATE 8/5/05
SHEET 15 of 15

agency

name
address
city, state, zip
ph: fx:

owner

SCIENCE BUILDING
LOS MEDANOS COLLEGE

Contra Costa Community College District

tBP project number : 20241.00

file name:

drawn by: checked by:

date: NOVEMBER 15, 2004

Rev:	date:	description:

drawing title:
PLUMBING -
2ND FLOOR - PARTIAL PLAN

LMC SCIENCE 313-023-T12.01-0-00.00

drawing no.:
P2.2

drawing of ?

U:\2003-029\DWG\P-2\1-4.dwg Time:Nov/11/2004-05:53pm

AAAB

S. J. AMOROSO
Request For Information/Clarification

DSA FILE NO. 7-C1
DSA APPL. No. 01-106226

To: IBP/Architecture
1000 Burnett Ave, Suite 140
Concord, CA 94520

Attn: Dalia Chiang, Tom Beckett
Fax: 925-246-6499

Subj.: Storage Room 228.Sink with no plumbing shown.
Reference (dwg, spec):

Project: LOS MEDANOS COLLEGE
SCIENCE BUILDING
Contra Costa Community College District

IBP pjtc: 20247.00

RFI No.: 117
Subcontractor RFI#

Reply Requested By: 2/8/06

INFORMATION REQUESTED: Date: 2/1/06
Please note the attached Oviedo and Sons RFI No., 30 regarding Storage Room 228 which shows a sink on H line. No fixture designation or plumbing show. Please advise and provide direction if necessary.
SUGGESTED SOLUTION:

Cost Impact: ☐ Schedule Impact: ☐ days By: Mark Delgado

RESPONSE: DATE: -

Author: dveston
Subject: Note
Date: 2/6/2006 2:08:10 PM
See attached for proposed pipe routing.

Attachments: By:

TRANSMITTAL RECORD:

FROM	TO	DATE
S.J. AMOROSO	IBP / ARCHITECTURE	2/1/06
IBP / ARCHITECTURE	ENGINEER/CONSULTANT	
ENGINEER/CONSULTANT	IBP / ARCHITECTURE	
IBP / ARCHITECTURE	S.J. AMOROSO	
S.J. AMOROSO	ORIGINATOR	

RFI # 000
Page 1

Oviedo & Sons Mechanical, Inc.
P.O. Box 910
Byron, CA 94550
Ph.: (925)634-0696

RFI

To: Justin (Intern)
BJ Amerson
IBP/Bridge Pjt/Arch
1000 Burnett Ave, Suite 140, Concord, CA 94520
Ph: 925-246-6400, Fax: 925-246-6499

RFI #: 30
Date: 1/31/2006
Job: 437 Los Medanos College
Phone: 925-427-7997

Cc: Delgado, Mark (DJ Assessor), Oviedo, Andy (Oviedo & Sons Mechanical, Inc), Timothy, Bill (Oviedo & Sons Mechanical, Inc), Times, Greg (Oviedo & Sons Mechanical, Inc)

Subject: Storage Room 228

Drawing: P2.0 Spec Section:
Cost Impact: Schedule Impact:

Request: Date Required: 2/1/2006
P2.0 – Storage Room 228 shows a sink on H Line. No fixture designation or plumbing shown. Please clarify.

Requested by: Steve Fiserman
Oviedo & Sons Mechanical, Inc

Response:

Addressed By:

Company: Date:

Page 1 of 1

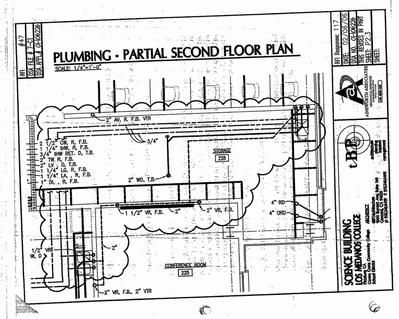

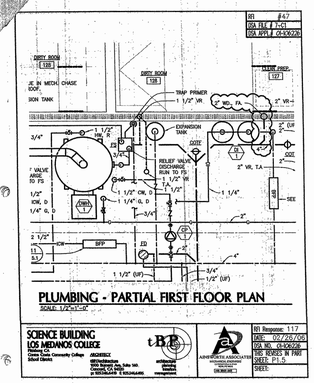

Los Medanos College
4CD Proj. #: L-S65-B-23-SC
Science Building

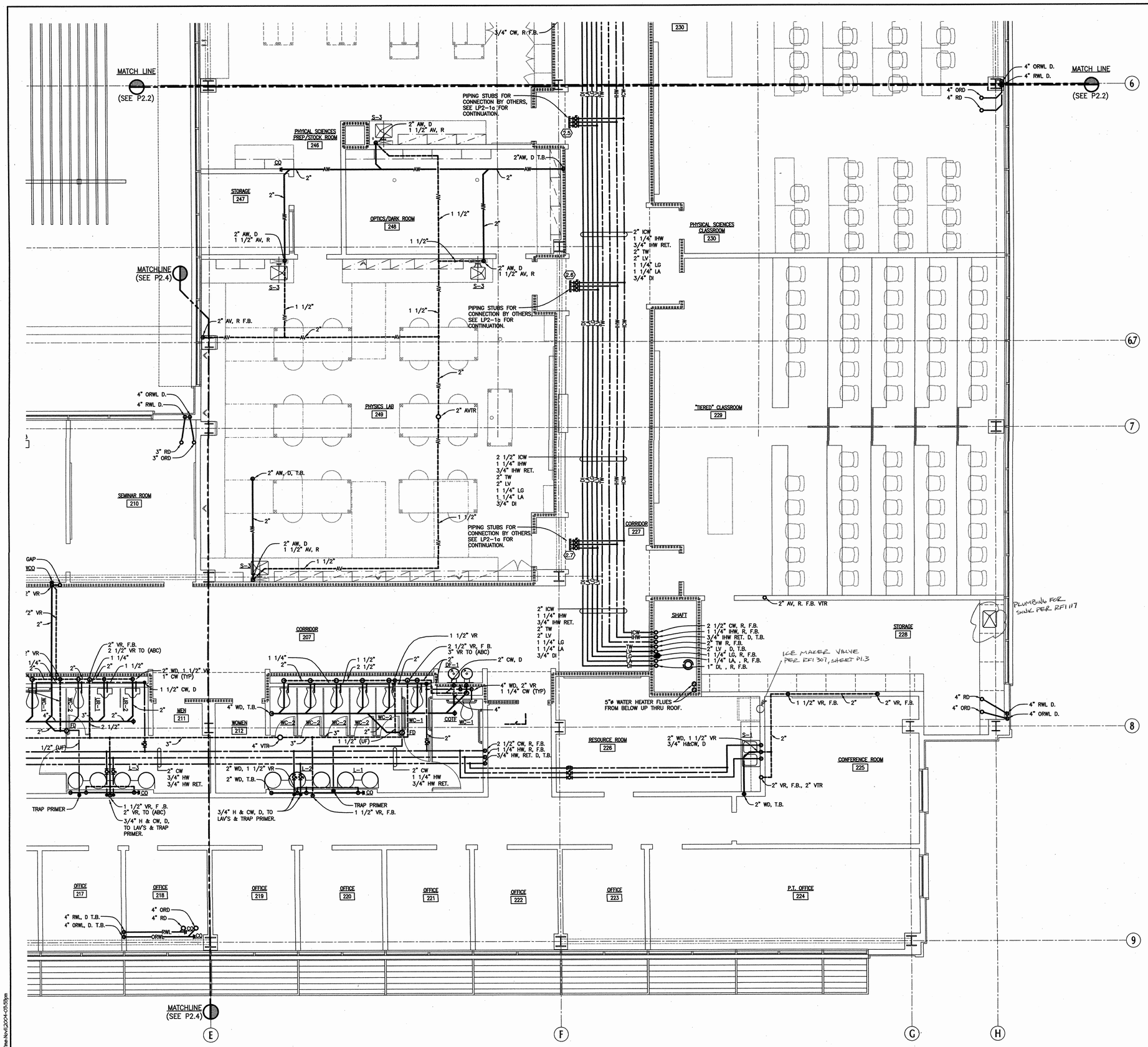

PLUMBING - 2ND FLOOR- PARTIAL PLAN

SCALE: 1/4"=1'-0"

1
P2.3

KEY PLAN

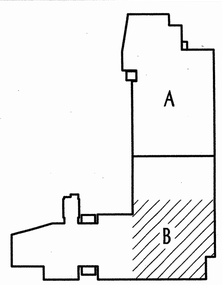

tBP
architecture
planning
interiors
management

tBP/Architecture
1000 Burnett Avenue, Suite 140
Concord, CA 94520
p: 925.246.6419 f: 925.246.6495

architect

AINSWORTH ASSOCIATES
MECHANICAL ENGINEERS
SACRAMENTO, CA
LOS-2005-008

consultant

name
address
city, state, zip
ph: fx:

agency

SCIENCE BUILDING
LOS MEDANOS COLLEGE

Contra Costa Community College District

owner

tBP project number : 20241.00
file name:
drawn by: checked by:
date: NOVEMBER 15, 2004

Rev:	date:	description:

drawing title:
PLUMBING - 2ND FLOOR - PARTIAL PLAN

LMC SCIENCE 313-023-112.01-0-00.00
drawing no.:
P2.3
drawing of ?

S. J. AMOROSO
Request For Information/Clarification

DSA FILE NO. 7-C1
DSA APPL. No. 01-106220

To: IBP/Architecture
1500 Bunnell Ave, Suite 140
Concord, CA 94520

Attn: Calla Chiang, Tom Beckett
Fax: 925-348-6456

Subj.: MS-1 and W33 Conflict

Reference (dwg, spec.): P2.4 @ D and 8

Project: LOS MEDANOS COLLEGE
SCIENCE BUILDING
Contra Costa Community College District

IBP p/n: 20247.00

RFI No: 209
Subcontractor RFI: Dowdle 42

Reply Requested By: 5/8/06

INFORMATION REQUESTED: Date: 5/2/06

Please note the attached Dowdle and Sons RFI regarding the MS-1 shown on P2.4 at D and 8 line w/duct the drain for this fixture lands directly on the flange of the W33 on D line. Please advise.

SUGGESTED SOLUTION:

Cost Impact: ☐ Schedule Impact: ☐ days By: Mark Delgado

RESPONSE: SEE AAME RESPONSE BELOW DATE: 5.9.06
+ SKA-209.1 ATTACHED.

Attachments:

By:

TRANSMITTAL RECORD:

FROM	TO	DATE
S.J. AMOROSO	IBP / ARCHITECTURE	5.2.06
IBP / ARCHITECTURE	ENGINEER/CONSULTANT	5.8.06
ENGINEER/CONSULTANT	IBP / ARCHITECTURE	5.9.06
IBP / ARCHITECTURE	S.J. AMOROSO	5.9.06
S.J. AMOROSO	ORIGINATOR	

AAME RESPONSE :

Author: Aeraton
Subject: RE:
Date: 5/9/2006 10:01:27 AM
Reference attached drawing for proposed change. Note that if RFI response results in a COR, the difference in piping between the change and the Contract Documents is as follows:
3/4" Copper Piping: +5' of pipe (add)
2" vent (east line): +3'-6" (add)
3" waste (east line): -5'-6" (credit)

RFI # 000
Page 1

Dowdle & Sons Mechanical, Inc.
P.O. Box 5310
Napa, CA 94581
Ph - (707)224-5900

RFI

To: Justin Warren
SJ Amoroso
393 Bridge Parkway
Redwood Shores, CA 94065
Ph: 650-654-1500 Fax: 650-654-0332

RFI #: 42
Date: 5/2/2006
Job: 457 Los Medanos College
Phone: 925-427-7987

CC:

Subject: MS-1

Drawing: P2.4 @ D and 8
Cost Impact:

Spec Section:
Schedule Impact:

Request: Date Required: 5/5/2006
On P2.4 @ D and 8 an MS-1 is shown. The drain for this fixture lands directly on the flange of the W33 on D-line.

Requested by: Chad Freeman
Dowdle & Sons Mechanical, Inc

Response: SEE SKA-209.1 ATTACHED.

Approved By

Company

Date

Page 1 of 1

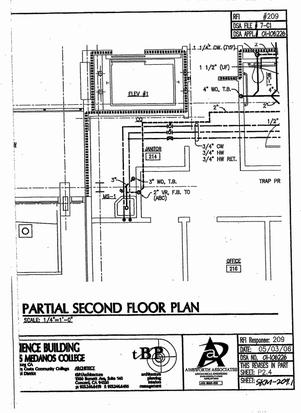

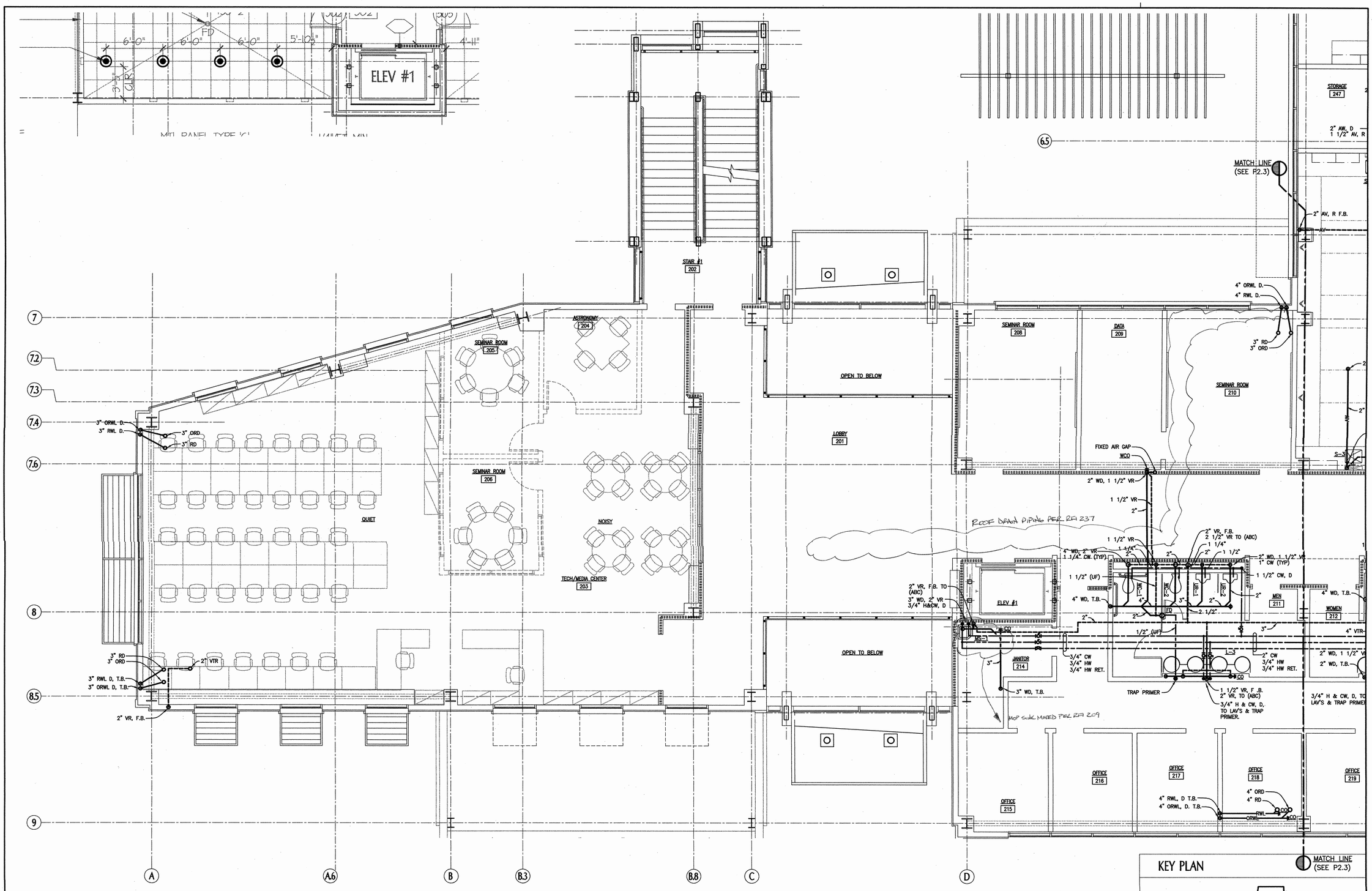

PLUMBING - 2ND FLOOR- PARTIAL PLAN

SCALE: 1/4"=1'-0"

1 / P2.4

KEY PLAN

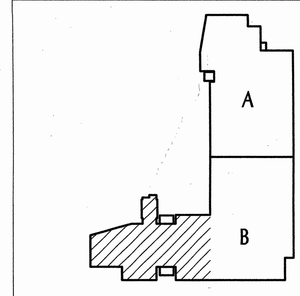

MATCH LINE (SEE P2.3)

tBP
architecture
planning
interiors
management

tBP/Architecture
1000 Burnett Avenue, Suite 140
Concord, CA 94520
p: 925.246.6419 f: 925.246.6495

architect

AINSWORTH ASSOCIATES
MECHANICAL ENGINEERS
SACRAMENTO, CA
(916) 929-1019

consultant

IDENTIFICATION STAMP
FOR OFFICIAL USE
ONLY OF THE STATE ARCHITECT
OFFICE OF REGULATION SERVICES
APP. # 04-118328
AC
DATE 1-13-05

name
address
city, state, zip
ph:
fx:

agency

SCIENCE BUILDING
LOS MEDANOS COLLEGE

Contra Costa Community College District

owner

tBP project number : 2024.00

file name:

drawn by: checked by:

date: NOVEMBER 15, 2004

Rev:	date:	description:

drawing title:
PLUMBING -
2ND FLOOR - PARTIAL PLAN

LMC SCIENCE 313-023-T12.01-0-00.00
drawing no:
P2.4
drawing of ?

I:\2023-023\DWG\P-2.1-4.dwg Time:Now\\ 2004-03-15pm

S. J. AMOROSO
Request For Information/Clarification

DSA FILE NO. 7-C1
DSA APPL. No. 01-106226

To: IBP/Architecture
1000 Burnett Ave, Suite 140
Concord, CA 94520

Attn: Celia Chiang, Tom Beckett
Fax: 925-246-6495

Subj.: Roof deck. drains

Reference (dwg, spec.) : A8-6, A3-2

Reply Requested By: 6/7/06

Project: LOS MEDANOS COLLEGE
SCIENCE BUILDING
Contra Costa Community College District

IBP p/n: 20247.00

RFI No: **237**
Subcontractor RFI: Dowdle 49

INFORMATION REQUESTED: Date: 5/31/06

On A8-6 detail 3 depicts the observation deck at the roof level there appears to be 2 EA floor drains in the pavers east and west of the observation lobby. In addition on A3-2 in the northwest corner of room 303 a roof drain and overflow are shown. No drains or piping are shown on the plumbing drawings at these locations. Please advise.

SUGGESTED SOLUTION:

Cost Impact: ☐ Schedule Impact: ☐ days By: Mark Delgado

RESPONSE: DATE: 6.05.06

Reference attachments and provide cost proposal for required changes.

SEE SHEET P2.4 FOR CONTINUATION OF PIPING

Attachments: By: D. Weston/AHR

TRANSMITTAL RECORD:

FROM	TO	DATE
S.J.AMOROSO	IBP / ARCHITECTURE	5/30/06 5.31.06
IBP/ ARCHITECTURE	ENGINEER/CONSULTANT	5.31.06
ENGINEER/CONSULTANT	IBP / ARCHITECTURE	6.05.06
IBP / ARCHITECTURE	S.J. AMOROSO	6.05.06
S.J. AMOROSO	ORIGINATOR	

RFI # 000
Page 1

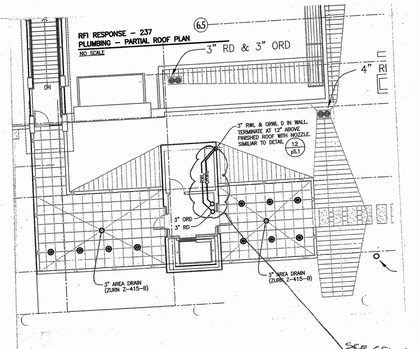

S. J. AMOROSO
Request For Information/Clarification

DSA FILE NO. 7-C1
DSA APPL. No. 01-106226

To: IBP/Architecture
1000 Burnett Ave, Suite 140
Concord, CA 94520

Attn: Celia Chiang, Tom Beckett
Fax: 925-246-6495

Subj.: Confirmation of overflow drain at observatory roof
Reference (dwg, spec.) : RFI 237, Bulletin 17

Reply Requested By: 7/7/06

Project: LOS MEDANOS COLLEGE
SCIENCE BUILDING
Contra Costa Community College District

IBP p/n: 20247.00

RFI No: **280**
Subcontractor RFI:

INFORMATION REQUESTED: Date: 7/7/06

Bulletin 17 directs us to provide an overflow scupper from the observatory roof for water to free fall to the science building roof. The response to RFI 237 directs us to pipe an overflow drain from the observatory roof down the observatory wall and drain onto the science building roof.

Please confirm our conversation that we are to follow the direction provided in Bulletin 17 and provide a scupper for the overflow.

SUGGESTED SOLUTION:

Cost Impact: ☐ Schedule Impact: ☐ days By: Justin Warren

RESPONSE: DATE:

Per Bulletin #17 for revisions to overflow scuppers, there shall be one overflow scupper at the parapet per UMA-17.8 and one RWL piped down.

Celia Chiang/IBP
7.10.06

RFI # 000
Page 1

Por

S. J. AMOROSO
Request For Information/Clarification

DSA FILE NO. 7-C1
DSA APPL. No. 01-106226

To: IBP/Architecture
1000 Burnett Ave, Suite 140
Concord, CA 94520

Attn: Celia Chiang, Tom Beckett
Fax: 925-246-6495

Subj.: Over flow nozzles at telescope storage

Reference (dwg, spec.): 12/P5.1, response to RFI 237

Reply Requested By: 6/15/06

Project: LOS MEDANOS COLLEGE
SCIENCE BUILDING
Contra Costa Community College District

IBP p/n: 20247.00

RFI No: **245**
Subcontractor RFI: Dowdle 50

INFORMATION REQUESTED: Date: 6/9/06

Per response to RFI 237, piping for overflow nozzles at the telescope storage room are to run down the east wall, which is a type 1 wall. This wall type does not allow enough physical room within the wall cavity to install the overflow nozzle per 12/P5.1. Possible solutions are to change the wall type or to route the piping inside the room (visible to those in the room) and turn horizontal at bottom of wall for the downspout nozzle. Please advise.

SUGGESTED SOLUTION:

Cost Impact: ☐ Schedule Impact: ☐ days By: Mark Delgado

RESPONSE: DATE:
Route RWL to north wall of storage room. See attached sketch. Dave Weston/AHR 6/14/06

See Bulletin #17 for locations and details of RWL and overflow scupper.

Attachments: Vanessa Ling/IBP
By: 6/14/06

TRANSMITTAL RECORD:

FROM	TO	DATE
S.J. AMOROSO	IBP / ARCHITECTURE	6/9/06
IBP / ARCHITECTURE	ENGINEER/CONSULTANT	6/9/06
ENGINEER/CONSULTANT	IBP / ARCHITECTURE	6/14/06
IBP / ARCHITECTURE	S.J. AMOROSO	6/14/06
S.J. AMOROSO	ORIGINATOR	

RFI # 000
Page 1

Dowdle & Sons Mechanical, Inc.
P.O. Box 5316
Hayward, CA 94540
Ph: (707)224-5995

RFI

To: Mark Delgado
SJ Amoroso
380 Bridge Parkway
Redwood Shores, CA 94065
Ph: 650-427-7100 Fax: 650-427-7070

RFI #: 99
Date: 6/6/2006
Job: 457 Los Medanos College
Phone: 650-427-7067

cc:

Subject: Response 237 - Overflow Nozzles

Drawing: 12/P5.1
Cost Impact:

Spec Section:
Schedule Impact:

Request: Date Required: 6/13/2006
Per response #237: Overflow Nozzles shown at Telescope Storage, type 1 wall does not allow enough space for Detail 12/P5.1.
Please advise

Requested by: Staci Freeman
Dowdle & Sons Mechanical, Inc

Responses:

Approved By: Date

Company

Page 1 of 1

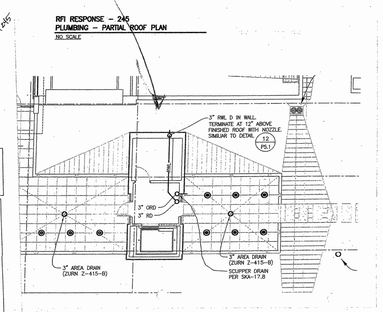

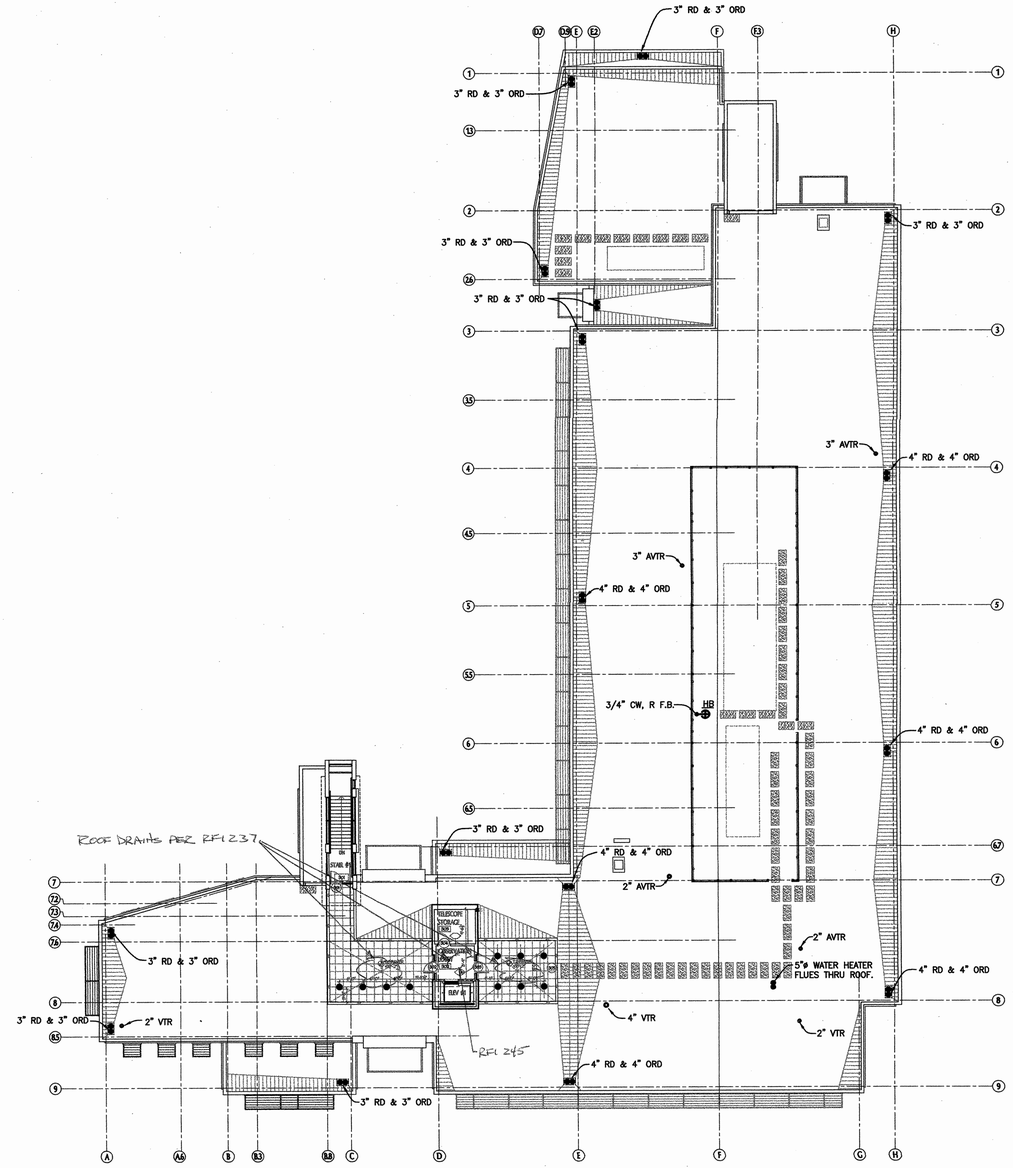

PLUMBING- ROOF PLAN

SCALE: 1/16"=1'-0"

1
P3.1

KEY PLAN

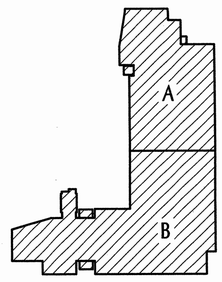

tBP
architecture
planning
interiors
management

tBP/Architecture
1000 Burnett Avenue, Suite 140
Concord, CA 94520
p: 925.246.6419 f: 925.246.6495

architect

AINSWORTH ASSOCIATES
MECHANICAL ENGINEERS
SACRAMENTO, CA
LOS-2005-005

consultant

name
address
city, state, zip
ph: fx:

agency

SCIENCE BUILDING
LOS MEDANOS COLLEGE

Contra Costa Community College District

owner

tBP project number : 20241.00
file name:
drawn by: checked by:
date: NOVEMBER 15, 2004

Rev:	date:	description:

drawing title:
PLUMBING - ROOF PLAN

LMC SCIENCE 313-023-112.01-0-00.00
drawing no.: P3.1
drawing of ?

Bulletin No.21

Date: March 22, 2006

To: S.J. Amoroso Construction
300 Bridge Parkway
Redwood shores CA 94065

Project: LOS MEDANOS COLLEGE SCIENCE BUILDING
Contra Costa Community College District
DSA No. 01-106226, File # 7-C1
tBP JOB 20247.00

Description: REFERENCE: P5.1, RFI #138:

Based upon existing site conditions and review with geotechnical engineer, the neutralizing sump detail per detail 7/P5.1 has been revised as SKA-21.1.

Due to existence of sanitary sewer main line beneath area where neutralizing tank is to be installed, CDF backfill (as submitted in Submittal #14) is to be placed to protect pipe from bearing pressure above as noted on revised sketch.

Note that fill area are to exceed the dimensional boundaries of the pre-case concrete utility vault as noted.

Issued By: Architect

Requested By: Architect, Owner

Reason: Revision to neutralizing tank

Enclosures: SKA-21.1

Distribution:

Copies:	Name:	Organization:
1 copy	Mark Delgado	S. J. Amoroso
1 copy	Cam Ferreira	CCCCDistrict
1 copy	Bob Hacke	Inspector of Record
1 copy	Tom Beckett	tBP/Architecture
1 copy	File 20247.007.4	tBP/Architecture

Action:
- ☐ For Information/Clarification only
- ☐ Provide Price/Credit Proposal. (Refer to this Bulletin No. when responding)
- ☐ Requires DSA review and approval
- ☒ Proceed as authorized by District

cc: DOWDLE

tBP/Architecture, 1000 Burnett Ave. Suite 140 , Concord, CA, 94520. ph: 925-246-6495. fax: 925-246-6495

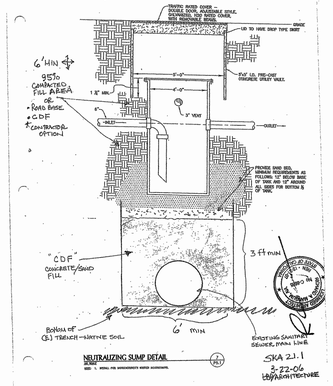

S. J. AMOROSO
Request For Information/Clarification

DSA FILE NO. 7-C1
DSA APPL. No. 01-106226

To: tBP/Architecture
1000 Burnett Ave, Suite 140
Concord, CA 94520

Attn: Celia Chiang, Tom Beckett
Fax: 925-246-6495

Subj.: Fixed Air Gap Detail

Reference (dwg, spec.): 6/P5.1

Reply Requested By: 8/24/06

Project: LOS MEDANOS COLLEGE SCIENCE BUILDING
Contra Costa Community College District

tBP jobs 20247.00

RFI No: **319**
Subcontractor RFI: Dowdle 64

INFORMATION REQUESTED: Date: 8/17/06

Please note the attached Dowdle and Sons RFI #64 regarding the Fixed Air Gap shown on 6/P5.1. No Cold Water lines are shown in the vicinity of this fixed air gap fitting. Will a cold water line be necessary to supply the trap primer valves or will the constant flow of condensate from the air conditioning units be Sufficient. Please advise.

SUGGESTED SOLUTION:
Cost Impact: ☐ Schedule Impact: ☐ days By: Justin Warren

RESPONSE: DATE:

A trap primer is not required at this location.
Per CPC - trap primers are only required at "infrequently used drains".

Dave Weston/AAMB
8/17/06

cc: DOWDLE

RFI # 000
Page 1

Dowdle & Sons Mechanical, Inc.
Plumbing
Fire Sprinkler
Mechanical Services

RFI

To: Mark Delgado
S.J Amoroso
300 Bridge Parkway
Redwood Shores, CA 94065
Ph: 925-427-7567 Fax: 925-427-7570

RFI #: 64
Date: 8/15/2006
Job: 437 Los Medanos College
Phone: 925-427-7567

CC:

Subject: Fixed Air Gap Detail

Drawing: 6/P5.1
Cost Impact: Subject to Response
Spec Section:
Schedule Impact: Subject to Response

Request: Date Required: 8/22/2006
On 6/P5.1 a Fixed Air Gap is shown. The detail depicts a 1/2" CW Pipe to Supply a trap primer valve. At 2.3 and 7.5 and 7.8 and E.2 on P1.1 and P1.3 on cold water piping is shown in the vicinity of the fixed air gap fittings. Will a cold water line need to be installed to supply the trap primer valves or will the constant flow of condensate from the air conditioning units be sufficient to maintain a proper trap seal? Please advise.

Requested by: Steyl Freeman
Dowdle & Sons Mechanical, Inc

Response:

Answered By:

Company Date

Page 1 of 1

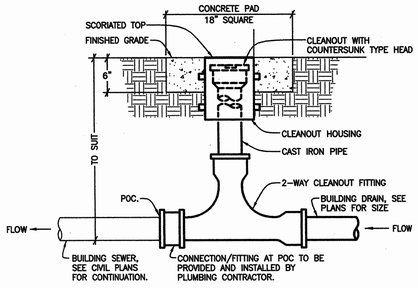

NOTES: 1. PROVIDE TWO WAY CLEANOUT AT ALL SANITARY SEWER AND STORM DRAIN POINTS OF CONNECTION WITH SITE PIPING SYSTEM.
2. PROVIDE ALL FITTINGS AND TRANSITION AS REQUIRED.

2-WAY CLEANOUT AT GRADE

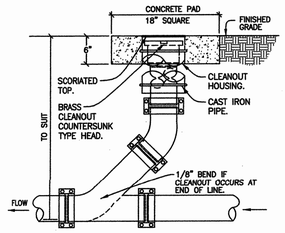

CLEANOUT TO GRADE

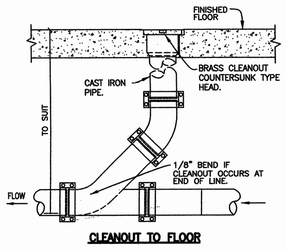

CLEANOUT TO FLOOR

CLEANOUT DETAILS

NO SCALE

1 / 5.1

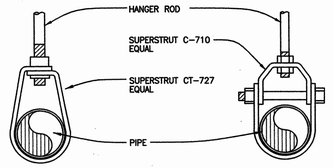

UNINSULATED COPPER PIPE **UNINSULATED PIPE**

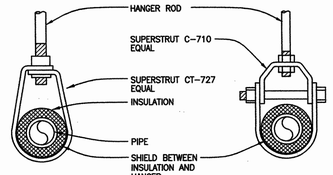

INSULATED COPPER PIPE **INSULATED PIPE**

NOTE: FOR HANGER ROD SIZE & SUPPORT DETAIL, SEE 2 / P5.1

PIPE HANGER DETAIL

NO SCALE

3 / P5.1

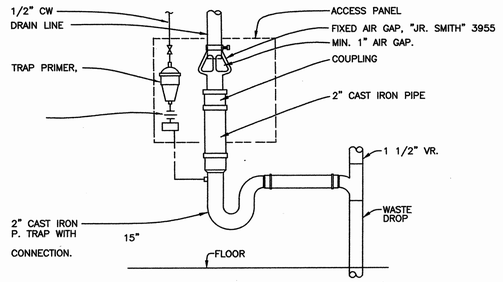

FIXED AIR GAP (FAG) DETAIL SEE RFI 319

NO SCALE

6 / P5.1

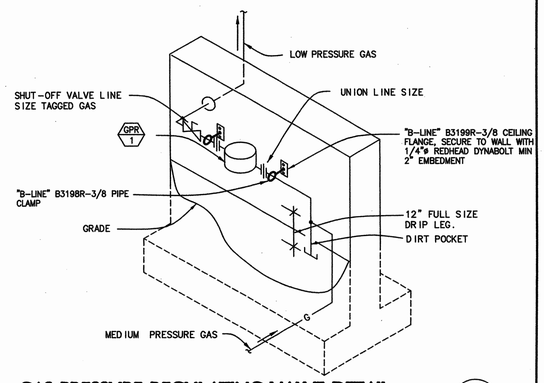

GAS PRESSURE REGULATING VALVE DETAIL

NO SCALE

9 / P5.1

DETAIL NOT USED

NO SCALE

10 / P5.1

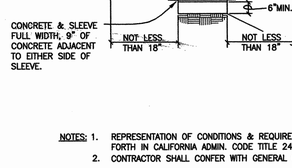

NOTES: 1. REPRESENTATION OF CONDITIONS & REQUIREMENTS SET FORTH IN CALIFORNIA ADMIN. CODE TITLE 24.
2. CONTRACTOR SHALL CONFER WITH GENERAL CONTRACTOR

RELATION OF PIPES & TRENCHES TO FOUNDATIONS

NO SCALE

4 / P5.1

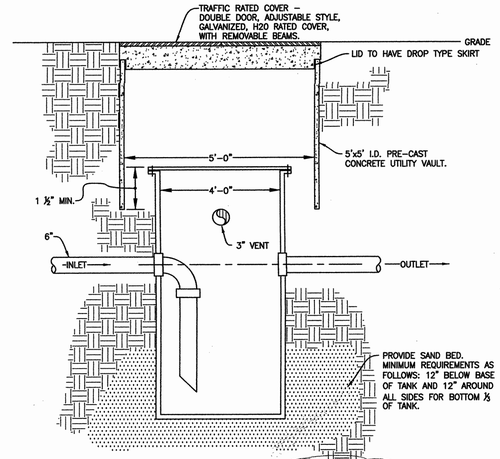

NEUTRALIZING SUMP DETAIL

NO SCALE

NOTE: 1. INSTALL PER MANUFACTURER'S WRITTEN INSTRUCTIONS.

7 / P5.1

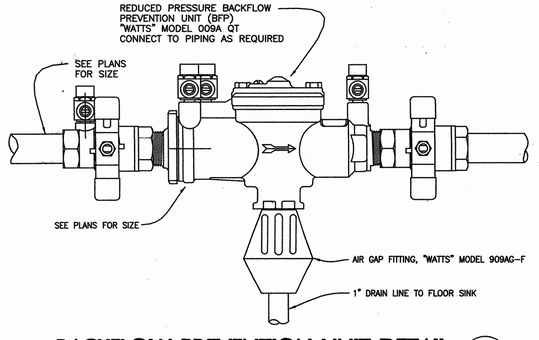

BACKFLOW PREVENTION UNIT DETAIL

NO SCALE

11 / P5.1

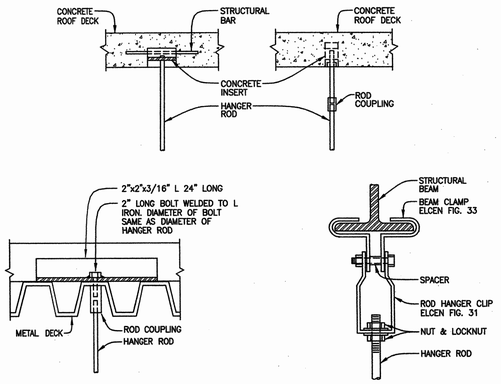

HANGER ROD SCHEDULE	
PIPE SIZE	ROD SIZE
1/2" TO 4"	3/8"ø
5" TO 8"	1/2"ø
10" TO 12"	5/8"ø

HANGER ROD SUPPORT DETAILS

NO SCALE

2 / P5.1

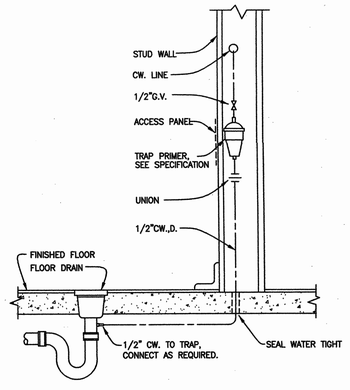

TRAP PRIMER TO FLOOR DRAIN

NO SCALE

5 / P5.1

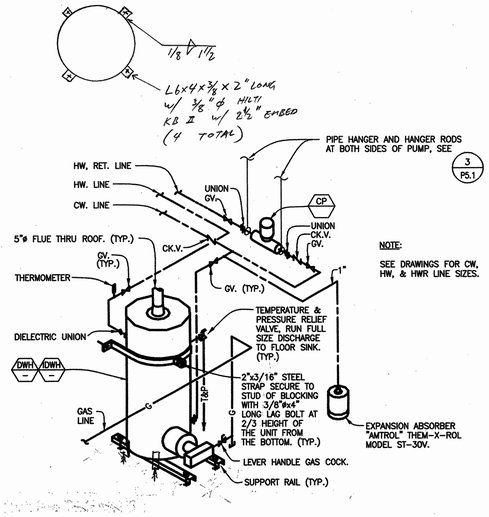

DOMESTIC & INDUSTRIAL HOT WATER HEATER PIPING DIAGRAMS

NO SCALE

8 / P5.1

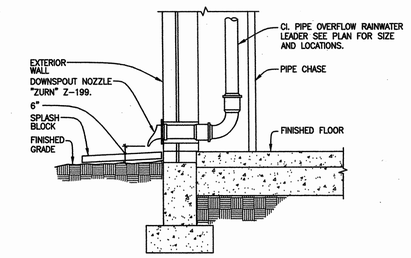

OVERFLOW RAINWATER LEADER DOWNSPOUT DETAIL

NO SCALE

12 / P5.1

tBP
architecture
planning
interiors
management
tBP/Architecture
1000 Burnett Avenue, Suite 140
Concord, CA 94520
p: 925.246.6419 f: 925.246.6495
architect

AINSWORTH ASSOCIATES
MECHANICAL ENGINEERS
SACRAMENTO, CA
consultant

name
address
city, state, zip
ph: fx:
agency

SCIENCE BUILDING
LOS MEDANOS COLLEGE

Contra Costa Community College District

owner

tBP project number : 20241.00

file name:

drawn by: checked by:

date: NOVEMBER 15, 2004

Rev:	date:	description:

drawing title:
PLUMBING - DETAILS

LMC SCIENCE 313-023-112.01-0-00.00

drawing no:
P5.1
drawing of ?

U:\2023-2029\P6695\PS-1.dwg Time/Xref:2004-03-54pm

SYSTEM NO. C–AJ–5002

F RATINGS – 2 AND 3 HR (SEE ITEMS 1A AND 4)
T RATINGS – 0, 1/2 AND 1 HR (SEE ITEMS 1A AND 4)
L RATING AT AMBIENT – 2 CFM/sq ft
L RATING AT 400 F – LESS THAN 1 CFM/sq ft

1. FLOOR OR WALL ASSEMBLY – MIN 2–1/2 IN. THICK REINFORCED LIGHTWEIGHT OR NORMAL WEIGHT (100–150 PCF) CONCRETE. WALL MAY ALSO BE CONSTRUCTED OF ANY UL CLASSIFIED CONCRETE BLOCKS*. MAX DIAM OF OPENING IS 36 IN. SEE CONCRETE BLOCKS (CAZT) CATEGORY IN THE FIRE RESISTANCE DIRECTORY FOR NAMES OF MANUFACTURERS.
   1A. STEEL SLEEVE (OPTIONAL, NOT SHOWN) – NOM 36 IN. DIAM (OR SMALLER) SCHEDULE 10 (OR HEAVIER) STEEL PIPE SLEEVE CAST INTO MIN 4–1/2 IN. THICK CONCRETE FLOOR OR WALL. SLEEVE TO BE FLUSH WITH OR PROJECT MAX. 2 IN. FROM TOP SURFACE OF FLOOR OR FROM BOTH SURFACES OF WALL. WHEN STEEL SLEEVE IS USED, F RATING IS 2 HR AND T RATING IS 0 HR.
2. PIPE – NOM 4 IN. DIAM (OR SMALLER) TYPE L (OR HEAVIER) COPPER PIPE, NOM 15 IN. DIAM (OR SMALLER) SERVICE WEIGHT (OR HEAVIER) CAST IRON SOIL PIPE, NOM 30 IN. DIAM (OR SMALLER) CLASS 50 (OR HEAVIER) DUCTILE IRON PRESSURE PIPE OR NOM 30 IN. DIAM (OR SMALLER) SCHEDULE 10 (OR HEAVIER) STEEL PIPE CENTERED IN THE OPENING AND RIGIDLY SUPPORTED ON BOTH SIDES OF THE FLOOR OR WALL ASSEMBLY.
3. PIPE COVERING* – NOM 1, 2 OR 3 IN. THICK HOLLOW CYLINDRICAL HEAVY DENSITY (MIN. 3.5 PCF) GLASS FIBER UNITS JACKETED ON THE OUTSIDE WITH AN ALL SERVICE JACKET. LONGITUDINAL JOINTS SEALED WITH METAL FASTENERS OR FACTORY–APPLIED SELF–SEALING LAP TAPE. TRANSVERSE JOINTS SECURED WITH METAL FASTENERS OR WITH BUTT STRIP TAPE SUPPLIED WITH THE PRODUCT. SEE PIPE AND EQUIPMENT COVERING – MATERIALS* (BRGU) CATEGORY IN BUILDING MATERIALS DIRECTORY FOR NAMES OF MANUFACTURERS. ANY PIPE COVERING MATERIAL MEETING THE ABOVE SPECIFICATIONS AND BEARING THE UL CLASSIFICATION MARKING WITH A FLAME SPREAD INDEX OF 25 OR LESS AND A SMOKE DEVELOPED INDEX OF 50 OR LESS MAY BE USED.
4. FIRESTOP SYSTEM – THE DETAILS OF THE FIRESTOP SYSTEM SHALL BE AS FOLLOWS:
   A. FILL,VOID OR CAVITY MATERIALS* – WRAP STRIP – NOM 1/4 IN. THICK INTUMESCENT ELASTOMERIC MATERIAL FACED ON ONE SIDE WITH ALUMINUM FOIL, SUPPLIED IN 2 IN. WIDE BY 24 IN. LONG STRIPS. NOM 2 IN. WIDE STRIPS TIGHTLY–WRAPPED AROUND PIPE COVERING (FOIL SIDE EXPOSED) TO FILL ANNULAR SPACE. EACH LAYER OF WRAP STRIP IS TO BE INSTALLED WITH A BUTTED SEAM, WITH THE BUTTED SEAMS IN SUCCESSIVE LAYERS STAGGERED. WRAP STRIP LAYERS SECURELY BOUND WITH STEEL WIRE OR ALUMINUM FOIL TAPE AND SLIDE INTO ANNULAR SPACE SUCH THAT THE TOP EDGES ARE RECESSED MIN 1/2 IN. FORM TOP SURFACE OF FLOOR. IN WALL ASSEMBLIES, THE WRAP STRIP LAYERS SHALL BE INSTALLED IN THE SAME MANNER USED FOR FLOOR ASSEMBLIES BUT SHALL BE INSTALLED SYMMETRICALLY ON BOTH SIDES OF THE WALL. THE MIN NUMBER OF WRAP STRIP LAYERS REQUIRED IS DEPENDENT UPON THE MAX PIPE SIZE AND THE PIPE COVERING THICKNESS, AS SHOWN IN THE ADJACENT TABLE:
   A. FILL,VOID OR CAVITY MATERIALS* – CAULK – APPLIED TO FILL THE ANNULAR SPACE (OVER EDGES OF WRAP STRIP LAYERS) TO A MIN DEPTH OF 1/2 IN., FLUSH WITH TOP SURFACE OF FLOOR OR BOTH SURFACES OF WALL.

   MINNESOTA MINING & MFG CO – CP 25WB+
   *BEARING THE UL CLASSIFICATION MARKING

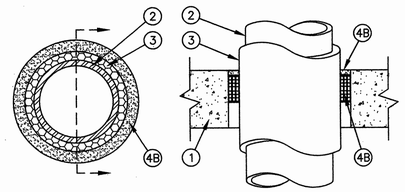

Min Floor or Wall Thkns In.	Max Pipe Dia In.	Nom Pipe Covering Thkns In.	Annular Space In.	Min. No. of Wrap Strip Layers	F Rating Hr	T Rating Hr
2–1/2	6	1	1/4 to 3/8	1	2	1
2–1/2	6	2	1/2 to 5/8	2	2	1
2–1/2	12	1	1/4 to 3/8	1	2	1/2
4–1/2	12	1	1/4 to 3/8	1	2	1
4–1/2	12	2	1/2 to 5/8	2	2	1
4–1/2	20	1	1/2 to 1	2	2	1
4–1/2	30	2	3/4 to 1–1/4	3	2	1
4–1/2	20	3	1 to 1–1/2	4	2	1

INSULATED PIPE

1. FLOOR OR WALL ASSEMBLY – MIN 3–1/4 IN. THICK REINFORCED LIGHTWEIGHT OR NORMAL WEIGHT (100–150 PCF) CONCRETE. WALL MAY ALSO BE CONSTRUCTED OF ANY UL CLASSIFIED CONCRETE BLOCKS*. MAX DIAM OF CIRCULAR OPENING IS 6 IN.
   SEE CONCRETE BLOCKS (CAZT) CATEGORY IN THE FIRE RESISTANCE DIRECTORY FOR NAMES OF MANUFACTURERS.
2. THROUGH PENETRANTS – ONE METALLIC PIPE OR CONDUIT TO BE CENTERED WITHIN THE FIRESTOP SYSTEM. A NOM ANNULAR SPACE OF 3/4 IN. IS REQUIRED WITHIN THE FIRESTOP SYSTEM. PIPE OR CONDUIT TO BE RIGIDLY SUPPORTED ON BOTH SIDES OF FLOOR OR WALL ASSEMBLY. THE FOLLOWING TYPES AND SIZES OF METALLIC PIPES OR CONDUITS MAY BE USED:
   A. NOM 4 IN. DIAM (OR SMALLER) SCHEDULE 10 (OR HEAVIER) STEEL PIPE.
   B. CONDUIT – NOM 4 IN. DIAM (OR SMALLER) STEEL ELECTRICAL METALLIC TUBING OR STEEL CONDUIT.
3. PACKING MATERIAL – MIN 4 PCF MINERAL WOOL BATT INSULATION FIRMLY PACKED INTO OPENING AS A PERMANENT FORM. PACKING MATERIAL TO BE RECESSED FROM TOP SURFACE OF FLOOR OR FROM BOTH SURFACES OF WALL AS REQUIRE TO ACCOMMODATE THE REQUIRED THICKNESS OF FILL MATERIAL. MIN THICKNESS OF PACKING MATERIAL IN FLOORS AND WALLS TO BE 2–3/4 IN. AND 2–1/4 IN., RESPECTIVELY.
4. FILL,VOID OR CAVITY MATERIAL* – SEALANT – MIN 1/2 IN. THICKNESS OF FILL MATERIAL APPLIED WITHIN ANNULUS, FLUSH WITH TOP SURFACE OF FLOOR OR WITH BOTH SURFACES OF WALL. AS AN ALTERNATE, THE PERMANENT FORMING MATERIAL (ITEM 3) MAY BE OMITTED IF THE FILL MATERIAL THICKNESS IS INCREASED TO A MIN 1–1/2 IN.
   MINNESOTA MINING & MFG CO – TYPES FB–2000 OR FB–2000+.
   (NOTE: L RATINGS APPLY ONLY WHEN FB–2000+ IS USED.)
   *BEARING THE UL CLASSIFICATION MARKING

UNINSULATED PIPE

PIPE THRU CONCRETE FLOOR DETAIL (1 / P5.2)
NO SCALE

SYSTEM NO C–AJ–1014

(FORMERLY SYSTEM NO. 133)
F RATING––2 HR
T RATING––0 HR
L RATING AT AMBIENT––LESS THAN 1 CFM/sq ft (SEE ITEM 4)
L RATING AT 400° F––LESS THAN 1 CFM/sq ft (SEE ITEM 4)

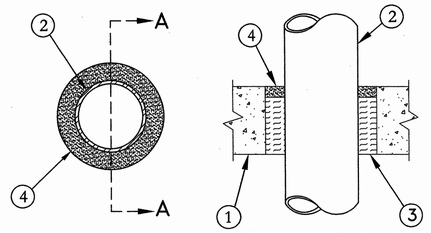

SECTION A–A

SYSTEM NO. W–L–5032

F RATING – 2 HR
T RATING – 1 OR 2 HR (SEE ITEMS 3 AND 3A)

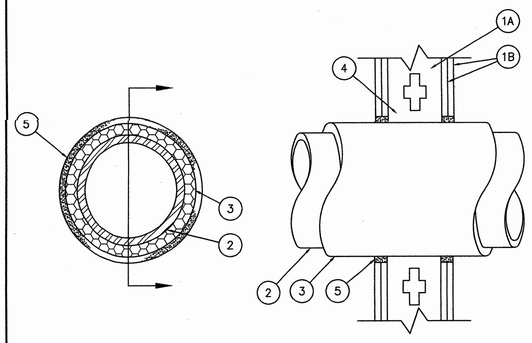

1. WALL ASSEMBLY – THE FIRE–RATED GYPSUM WALLBOARD/STUD WALL ASSEMBLY SHALL BE CONSTRUCTED OF THE MATERIALS AND IN THE MANNER SPECIFIED IN THE INDIVIDUAL U300 OR U400 SERIES WALL AND PARTITION DESIGNS IN THE UL FIRE RESISTANCE DIRECTORY AND SHALL INCLUDE THE FOLLOWING CONSTRUCTION FEATURES:
   A. STUDS – WALL FRAMING MAY CONSIST OF EITHER WOOD STUDS OR STEEL CHANNEL STUDS. WOOD STUDS TO CONSIST OF NOM 2 BY 4 IN. LUMBER SPACED 16 IN. OC. STEEL STUDS TO BE MIN 2–1/2 IN. WIDE AND SPACED MAX 24 IN. OC. WHEN STEEL STUDS ARE USED AND THE DIAM AT THE OPENING EXCEEDS THE WIDTH OF STUD CAVITY, THE OPENING SHALL BE FRAMED ON ALL SIDES USING LENGTHS OF STEEL STUD INSTALLED BETWEEN THE VERTICAL STUDS AND SCREW–ATTACHED TO THE STEEL STUDS AT EACH END. THE FRAMED OPENING IN THE WALL SHALL BE 7–1/2 IN. WIDER AND 7–1/2 IN. HIGHER THAN THE DIAM OF THE PENETRATING ITEM SUCH THAT, WHEN THE PENETRATING ITEM IS CENTERED IN THE OPENING, A 3–3/4 IN. CLEARANCE IS PRESENT BETWEEN THE PENETRATING ITEM AND THE FRAMING IN ALL FOUR SIDES.
   B. GYPSUM BOARD* – TWO LAYERS OF 5/8 IN. THICK GYPSUM WALLBOARD, AS SPECIFIED IN THE INDIVIDUAL WALL AND PARTITION DESIGN. MAX DIAM OF OPENING IS 14–1/2 IN. FOR WOOD STUD WALLS AND 31–1/2 IN. FOR STEEL STUD WALLS.
2. THROUGH PENETRANTS – ONE METALLIC PIPE, CONDUIT OR TUBING TO BE INSTALLED EITHER CONCENTRICALLY OR ECCENTRICALLY WITHIN THE FIRESTOP SYSTEM. PIPE, CONDUIT OR TUBING TO BE RIGIDLY SUPPORTED ON BOTH SIDES OF FLOOR OR WALL ASSEMBLY. THE FOLLOWING TYPES AND SIZES OF METALLIC PIPES, CONDUITS OR TUBING MAY BE USED:
   A. STEEL PIPE – NOM 24 IN. DIAM (OR SMALLER) SCHEDULE 10 (OR HEAVIER) STEEL PIPE.
   B. CONDUIT – NOM 4 IN. DIAM (OR SMALLER) ELECTRICAL METALLIC TUBING OR STEEL CONDUIT.
   C. COPPER TUBING – NOM 6 IN. DIAM (OR SMALLER) TYPE L (OR HEAVIER) COPPER TUBING.
   D. COPPER PIPE – NOM 6 IN. DIAM (OR SMALLER) REGULAR (OR HEAVIER) COPPER PIPE.
3. PIPE COVERING MATERIALS* – USED IN CONJUNCTION WITH ITEM 4. NOM 3 IN. THICK UNFACED MINERAL FIBER PIPE INSULATION SIZED TO THE OUTSIDE DIAM OF PIPE OR TUBE. PIPE INSULATION SECURED WITH MIN 8 AWG STEEL WIRE SPACED MAX 12 IN. OC. AN NOM ANNULAR SPACE OF 3/4 IN. IS REQUIRED WITHIN THE FIRESTOP SYSTEM. WHEN MINERAL WOOL PIPE COVERING IS USED, THE T RATING IS 2 HR. OWENS CORNING HT INC., DIV OF OWENS CORNING – HIGH TEMPERATURE PIPE INSULATION 1200, HIGH TEMPERATURE PIPE INSULATION BWT OR HIGH TEMPERATURE PIPE INSULATION THERMALOC
   A. PIPE COVERING* – USED AS AN ALTERNATE TO ITEM 3 AND 4. NOM 1 IN. THICK HOLLOW CYLINDRICAL HEAVY DENSITY (MIN 3.5 PCF) GLASS FIBER UNITS JACKETED ON THE OUTSIDE WITH AN ALL SERVICE JACKET. LONGITUDINAL JOINTS TIGHTLY BUTTED AND SEALED WITH METAL FASTENERS OR FACTORY APPLIED SELF–SEALING LAP TAPE. TRANSVERSE JOINTS SECURED WITH METAL FASTENERS OR WITH BUTT TAPE SUPPLIED WITH THE PRODUCT. A NOM ANNULAR SPACE OF 3/4 IN. IS REQUIRED WITHIN THE FIRESTOP SYSTEM. WHEN GLASS FIBER PIPE COVERING IS USED, THE T RATING IS 1 HR. SEE PIPE AND EQUIPMENT COVERING – MATERIALS (BRGU) CATEGORY IN THE BUILDING MATERIALS DIRECTORY FOR THE NAMES OF MANUFACTURERS. ANY PIPE COVERING MATERIAL MEETING THE ABOVE SPECIFICATIONS AND BEARING THE UL CLASSIFICATION MARKING WITH A FLAME SPREAD INDEX OF 25 OR LESS AND A SMOKE DEVELOPED INDEX OF 50 OR LESS MAY BE USED.
4. SHEETING MATERIAL (NOT SHOWN) – USED IN CONJUNCTION WITH ITEM 3. FOIL–SCRIM–KRAFT OR ALL SERVICE JACKET MATERIAL SHALL BE WRAPPED AROUND THE OUTER CIRCUMFERENCE OF THE PIPE COVERING MATERIAL (ITEM 3) WITH THE KRAFT SIDE EXPOSED. LONGITUDINAL JOINTS SEALED WITH METAL FASTENERS. SEE SHEATHING MATERIALS (BVDV) CATEGORY IN THE BUILDING MATERIALS DIRECTORY FOR NAMES OF MANUFACTURERS. ANY SHEATHING MATERIAL MEETING THE ABOVE SPECIFICATIONS AND BEARING THE UL CLASSIFICATION MARKING WITH A FLAME SPREAD INDEX OF 25 OR LESS AND A SMOKE DEVELOPED INDEX OF 50 OR LESS MAY BE USED.
5. FILL,VOID OR CAVITY MATERIAL* – SEALANT – MIN 1–1/4 IN. THICKNESS OF FILL MATERIAL APPLIED WITHIN THE ANNULUS ON BOTH SURFACES OF WALL. ADDITIONAL FILL MATERIAL TO BE INSTALLED SUCH THAT A MIN 1/4 IN. CROWN IS FORMED AROUND THE PENETRATING ITEM.

INSULATED PIPE

SYSTEM NO. W–L–1010

F RATING–– 2 HR
T RATING––0 HR
L RATING AT AMBIENT––LESS THAN 1 CFM/sq ft (SEE ITEM 3)
L RATING AT 400° F––LESS THAN 1 CFM/sq ft (SEE ITEM 3)

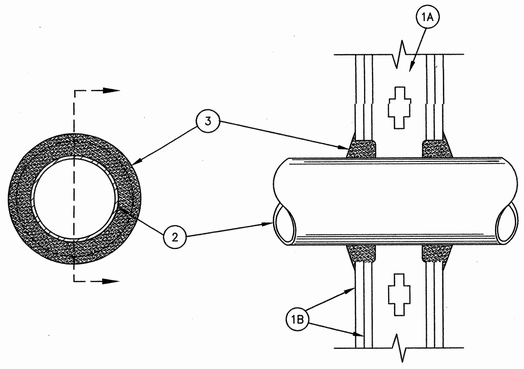

WALL ASSEMBLY – THE FIRE RATED GYPSUM WALLBOARD/STUD WALL ASSEMBLY SHALL BE CONSTRUCTED OF THE MATERIALS AND IN THE MANNER SPECIFIED IN THE INDIVIDUAL U300 OR U400 SERIES WALL AND PARTITION DESIGNS IN THE UL FIRE RESISTANCE DIRECTORY AND SHALL INCLUDE THE FOLLOWING CONSTRUCTION FEATURES:

A. STUDS – WALL FRAMING MAY CONSIST OF EITHER WOOD STUDS OR STEEL CHANNEL STUDS. WOOD STUDS TO CONSIST OF NOM 2 BY 4 IN. LUMBER SPACED 16 IN. OC. STEEL STUDS TO BE MIN 2–1/2 IN. WIDE AND SPACED MAX 24 IN. OC. WHEN STEEL STUDS ARE USED AND THE DIAM OF OPENING EXCEEDS THE WIDTH OF STUD CAVITY, THE OPENING SHALL BE FRAMED ON ALL SIDES USING LENGTHS OF STEEL STUD INSTALLED BETWEEN THE VERTICAL STUDS AND SCREW ATTACHED TO THE STEEL STUDS AT EACH END. THE FRAMED OPENING IN THE WALL SHALL BE 4 TO 6 IN. WIDER AND 4 TO 6 IN. HIGHER THAN THE DIAM OF THE PENETRATING ITEM SUCH THAT, WHEN THE PENETRATING ITEM IS CENTERED IN THE OPENING, A 2 TO 3 IN. CLEARANCE IS PRESENT BETWEEN THE PENETRATING ITEM AND THE FRAMING IN ALL FOUR SIDES.

1. B. GYPSUM BOARD* – TWO LAYERS OF NOM 5/8 IN. THICK GYPSUM WALLBOARD, AS SPECIFIED IN THE INDIVIDUAL WALL AND PARTITION DESIGN. MAX DIAM OF OPENING IS 14–1/2 IN. FOR WOOD STUD WALLS AND 25–1/2 IN. FOR STEEL STUD WALLS.

THROUGH PENETRANTS – ONE METALLIC PIPE, CONDUIT OF TUBING TO BE CENTERED WITHIN THE FIRESTOP SYSTEM. PIPE, CONDUIT OR TUBING TO BE RIGIDLY SUPPORTED ON BOTH SIDES OF WALL ASSEMBLY. THE FOLLOWING TYPES AND SIZES OF METALLIC PIPES, CONDUITS OR TUBING MAY BE USED:

A. STEEL PIPE – NOM 24 IN. DIAM (OR SMALLER) SCHEDULE 10 (OR HEAVIER) STEEL PIPE. A NOM ANNULAR SPACE OF 3/4 IN. IS REQUIRED WITHIN THE FIRESTOP SYSTEM.

B. STEEL PIPE – NOM 4 IN. DIAM (OR SMALLER) SCHEDULE 5 (OR HEAVIER) STEEL PIPE. A NOM ANNULAR SPACE OF 3/4 IN. IS REQUIRED WITHIN THE FIRESTOP SYSTEM.

2. C. CONDUIT – NOM 4 IN. DIAM (OR SMALLER) STEEL ELECTRICAL METALLIC TUBING OR STEEL CONDUIT. A NOM ANNULAR SPACE OF 3/4 IN. IS REQUIRED WITHIN THE FIRESTOP SYSTEM.

D, COPPER TUBING – NOM 6 IN. DIAM (OR SMALLER) TYPE L (OR HEAVIER) COPPER TUBING. A NOM ANNULAR SPACE OF 3/4 IN. IS REQUIRED WITHIN THE FIRESTOP SYSTEM.

3. FILL,VOID OR CAVITY MATERIAL* – SEALANT – MIN 1–1/4 IN. THICKNESS OF FILL MATERIAL APPLIED WITHIN THE ANNULUS ON BOTH SURFACES OF WALL. ADDITIONAL FILL MATERIAL TO BE INSTALLED SUCH THAT A MIN 1/4 IN. CROWN IS FORMED AROUND THE PENETRATING ITEM. MINNESOTA MINING & MFG CO – TYPES FB–2000, FB–2000+. (NOTE: L RATINGS APPLY ONLY WHEN FB–2000+ IS USED).

*BEARING THE UL CLASSIFICATION MARKING

UNINSULATED PIPE

PIPE THRU 1 HOUR FIRE RATED WALL DETAIL (2 / P5.2)
NO SCALE

SYSTEM NO. W–L–5001

F RATINGS – 1 AND 2 HR (SEE ITEM 1)
T RATINGS – 3/4, 1 AND 1–1/2 HR (SEE ITEM 3)
L RATING AT AMBIENT – 2 CFM/sq ft
L RATING AT 400 F – LESS THAN 1 CFM/sq ft

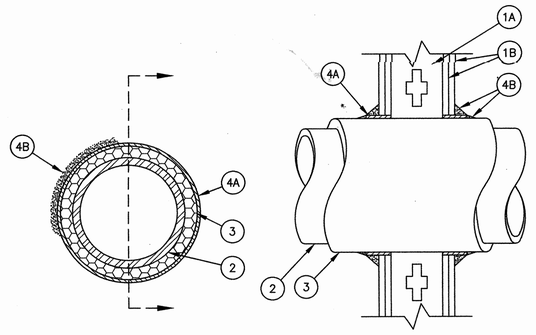

1. WALL ASSEMBLY – THE 1 OR 2 HR FIRE–RATED GYPSUM WALLBOARD/STUD WALL ASSEMBLY SHALL BE CONSTRUCTED OF THE MATERIALS AND IN THE MANNER DESCRIBED IN THE INDIVIDUAL U300 OR U400 SERIES WALL OR PARTITION DESIGN IN THE UL FIRE RESISTANCE DIRECTORY AND SHALL INCLUDE THE FOLLOWING CONSTRUCTION FEATURES:
   A. STUDS – WALL FRAMING MAY CONSIST OF EITHER WOOD STUDS OR STEEL CHANNEL STUDS. WOOD STUDS TO CONSIST OF NOM 2 BY 4 IN. LUMBER SPACED 16 IN. OC WITH NOM 2 BY 4 IN. LUMBER END PLATES AND CROSS BRACES. STEEL STUDS TO BE MIN 3–5/8 IN. WIDE BY 1–3/8 IN. DEEP CHANNELS SPACED MAX 24 IN. OC.
   B. GYPSUM BOARD* – NOM 5/8 IN. THICK, 4 FT. WIDE WITH SQUARE OR TAPERED EDGES. THE GYPSUM WALLBOARD TYPE, THICKNESS, NUMBER OF LAYERS, FASTENER TYPE AND SHEET ORIENTATION SHALL BE AS SPECIFIED IN THE INDIVIDUAL U300 OR U400 SERIES DESIGN IN THE UL FIRE RESISTANCE DIRECTORY. MAX DIAM OF OPENING IS 14–1/2 IN FOR WOOD STUD WALLS AND 18 IN. FOR STEEL STUD WALLS. THE HOURLY F RATING OF THE FIRESTOP SYSTEM IS 1 HR WHEN INSTALLED IN A 1 HR FIRE RATED WALL AND 2 HR WHEN INSTALLED IN A 2 HR FIRE RATED WALL.
2. THROUGH PENETRANTS – ONE METALLIC PIPE OR TUBING TO BE CENTERED WITHIN THE FIRESTOP SYSTEM. PIPE OR TUBING TO BE RIGIDLY SUPPORTED ON BOTH SIDES OF WALL ASSEMBLY. THE FOLLOWING TYPES AND SIZES OF METALLIC PIPES OR TUBING MAY BE USED:
   A. STEEL PIPE – NOM 12 IN. DIAM (OR SMALLER) SCHEDULE 10 (OR HEAVIER) STEEL PIPE.
   B. COPPER TUBING – NOM 6 IN. DIAM (OR SMALLER) TYPE L (OR HEAVIER) COPPER TUBING.
   C. COPPER PIPE – NOM 6 IN. DIAM (OR SMALLER) REGULAR (OR HEAVIER) COPPER PIPE.
3. PIPE COVERING* – NOM 1 OR 2 IN. THICK HOLLOW CYLINDRICAL HEAVY DENSITY (MIN 3.5 PCF) GLASS FIBER UNITS JACKETED ON THE OUTSIDE WITH AN ALL SERVICE JACKET. LONGITUDINAL JOINTS SEALED WITH METAL FASTENERS OR WITH BUTT STRIP TAPE SUPPLIED WITH THE PRODUCT. WHEN NOM 1 IN. THICK PIPE COVERING IS USED, THE ANNULAR SPACE BETWEEN THE PIPE COVERING AND THE CIRCULAR CUTOUT IN THE GYPSUM WALLBOARD LAYERS ON EACH SIDE OF THE WALL SHALL BE MIN 1/4 IN. TO MAX 3/4 IN. WHEN NOM 2 IN. THICK PIPE COVERING IS USED, THE ANNULAR SPACE BETWEEN THE PIPE COVERING AND THE CIRCULAR CUTOUT IN THE GYPSUM WALLBOARD LAYERS ON EACH SIDE OF THE WALL SHALL BE MIN 1/2 IN. TO MAX 3/4 IN. SEE PIPE AND EQUIPMENT COVERING – MATERIALS (BRGU) CATEGORY IN BUILDING MATERIALS DIRECTORY FOR NAMES OF MANUFACTURERS. ANY PIPE COVERING MATERIAL MEETING THE ABOVE SPECIFICATIONS AND BEARING THE UL CLASSIFICATION MARKING WITH A FLAME SPREAD INDEX OF 25 OR LESS AND A SMOKE DEVELOPED INDEX OF 50 OR LESS MAY BE USED. THE HOURLY T RATING OF THE FIRESTOP SYSTEM IS 3/4 HR WHEN NOM 1 IN. THICK PIPE COVERING IS USED.THE HOURLY T RATING OF THE FIRESTOP SYSTEM IS 1 HR AND 1–1/2 HR WHEN NOM 2 IN. THICK PIPE COVERING IS USED WITH 1 HR AND 2 HR FIRE RATED WALLS, RESPECTIVELY.
4. FIRESTOP SYSTEM – INSTALLED SYMMETRICALLY ON BOTH SIDES OF WALL ASSEMBLY. THE DETAILS OF THE FIRESTOP SYSTEM SHALL BE AS FOLLOWS:
   A. FILL,VOID OR CAVITY MATERIALS* – WRAP STRIP – NOM 1/4 IN. THICK INTUMESCENT ELASTOMERIC MATERIAL FACED ON ONE SIDE WITH ALUMINUM FOIL, SUPPLIED IN 2 IN. WIDE STRIPS. NOM 2 IN. WIDE STRIP TIGHTLY WRAPPED AROUND PIPE COVERING (FOIL SIDE OUT) WITH SEAM BUTTED. WRAP STRIP LAYER SECURELY BOUND WITH STEEL WIRE OR ALUMINUM FOIL TAPE AND SLID INTO ANNULAR SPACE APPROX 1–1/4 IN. SUCH THAT APPROX 3/4 IN. OF THE WRAP STRIP WIDTH PROTRUDES FROM THE WALL SURFACE. ONE LAYER OF WRAP STRIP IS REQUIRED WHEN NOM 1 IN. THICK PIPE COVERING IS USED. TWO LAYERS OF WRAP STRIP ARE REQUIRED WHEN NOM 2 IN. THICK PIPE COVERING IS USED.
   B. FILL,VOID OR CAVITY MATERIALS* – CAULK – MIN 1/4 IN. DIAM CONTINUOUS BEAD APPLIED TO THE WRAP STRIP/WALL INTERFACE AND TO THE EXPOSED EDGE OF THE WRAP STRIP LAYER APPROX 3/4 IN. FROM THE WALL SURFACE.

INSULATED PIPE

SYSTEM NO. W–L–1003

F RATINGS–– 1 AND 2 HR (SEE ITEM 1)
T RATING––0 HR

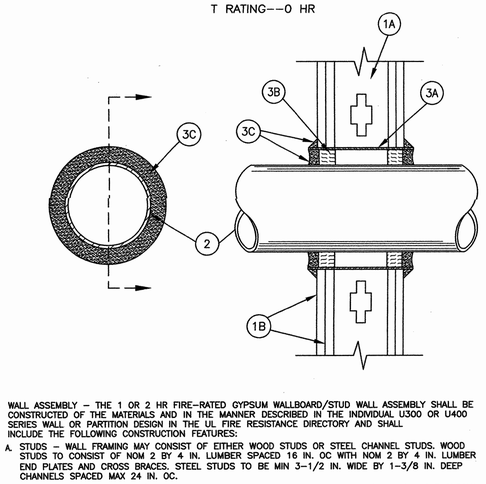

1. WALL ASSEMBLY – THE 1 OR 2 HR FIRE–RATED GYPSUM WALLBOARD/STUD WALL ASSEMBLY SHALL BE CONSTRUCTED OF THE MATERIALS AND IN THE MANNER DESCRIBED IN THE INDIVIDUAL U300 OR U400 SERIES WALL OR PARTITION DESIGN IN THE UL FIRE RESISTANCE DIRECTORY AND SHALL INCLUDE THE FOLLOWING CONSTRUCTION FEATURES:
   A. STUDS – WALL FRAMING MAY CONSIST OF EITHER WOOD STUDS OR STEEL CHANNEL STUDS. WOOD STUDS TO CONSIST OF NOM 2 BY 4 IN. LUMBER SPACED 16 IN. OC WITH NOM 2 BY 4 IN. LUMBER END PLATES AND CROSS BRACES. STEEL STUDS TO BE MIN 3–1/2 IN. WIDE BY 1–3/8 IN. DEEP CHANNELS SPACED MAX 24 IN. OC.
   B. GYPSUM BOARD* – NOM 5/8 IN. THICK, 4 FT. WIDE WITH SQUARE OR TAPERED EDGES. THE GYPSUM WALLBOARD TYPE, THICKNESS, NUMBER OF LAYERS, FASTENER TYPE AND SHEET ORIENTATION SHALL BE AS SPECIFIED IN THE INDIVIDUAL U300 OR U400 SERIES DESIGN IN THE UL FIRE RESISTANCE DIRECTORY. MAX DIAM OF OPENING IS 15 IN. THE HOURLY F RATING OF THE FIRESTOP SYSTEM IS EQUAL TO THE HOURLY FIRE RATING OF THE WALL ASSEMBLY IN WHICH IT IS INSTALLED.
2. THROUGH PENETRANT – ONE METALLIC PIPE, CONDUIT OR TUBING TO BE INSTALLED EITHER CONCENTRICALLY OR ECCENTRICALLY WITHIN THE FIRESTOP SYSTEM. THE SPACE BETWEEN PIPES, CONDUITS OR TUBING AND THE STEEL SLEEVE (ITEM 3A) SHALL BE MIN OF 0 IN. (POINT CONTACT) TO MAX 2–3/8 IN. PIPE, CONDUIT OR TUBING TO BE RIGIDLY SUPPORTED ON BOTH SIDES OF WALL ASSEMBLY. THE FOLLOWING TYPES AND SIZES OF METALLIC PIPES, CONDUITS OR TUBING MAY BE USED:
   A. STEEL PIPE – NOM 12 IN. DIAM (OR SMALLER) SCHEDULE 10 (OR HEAVIER) STEEL PIPE.
   B. IRON PIPE – NOM 12 IN. DIAM (OR SMALLER) SERVICE WEIGHT (OR HEAVIER) CAST IRON SOIL PIPE, NOM 12 IN. DIAM (OR SMALLER) OR CLASS 50 (OR HEAVIER) DUCTILE IRON PRESSURE PIPE.
   C. CONDUIT – NOM 6 IN. DIAM (OR SMALLER) STEEL CONDUIT OR NOM 4 IN. DIAM (OR SMALLER) STEEL ELECTRICAL METALLIC TUBING.
   D. COPPER TUBING – NOM 6 IN. DIAM (OR SMALLER) TYPE L (OR HEAVIER) COPPER TUBING.
   E. COPPER PIPE – NOM 6 IN. DIAM (OR SMALLER) REGULAR (OR HEAVIER) COPPER PIPE.
3. FIRESTOP SYSTEM – INSTALLED SYMMETRICALLY ON BOTH SIDES OF WALL ASSEMBLY. THE DETAILS OF THE FIRESTOP SYSTEM SHALL BE AS FOLLOWS.
   A. STEEL SLEEVE – CYLINDRICAL SLEEVE FABRICATED FROM MIN 0.019 IN. THICK (NO. 28 GAUGE) GALV SHEET STEEL AND HAVING A MIN 2 IN. LAP ALONG THE LONGITUDINAL SEAM. LENGTH OF STEEL SLEEVE TO BE EQUAL TO THICKNESS OF WALL PLUS 1 TO 4 IN. SUCH THAT, WHEN INSTALLED, THE ENDS OF THE SLEEVE WILL PROJECT APPROXIMATELY 1/2 TO 2 IN. BEYOND THE SURFACE OF THE WALL ON BOTH SIDES OF THE WALL ASSEMBLY. SLEEVE INSTALLED BY COILING THE SHEET STEEL TO A DIAM SMALLER THAN THE THROUGH OPENING, INSERTING THE COIL THROUGH THE OPENINGS AND RELEASING THE COIL TO LET IT UNCOIL AGAINST THE CIRCULAR CUTOUTS IN THE GYPSUM WALLBOARD LAYERS.
   B. PACKING MATERIAL – MIN 1 IN. THICKNESS OF MINERAL WOOL BATT INSULATION FIRMLY PACKED INTO STEEL SLEEVE ON BOTH SIDES OF THE WALL ASSEMBLY AS PERMANENT FORMS. PACKING MATERIAL TO BE RECESSED MIN 1/2 IN. FROM END OF STEEL SLEEVE (FLUSH WITH OR RECESSED INTO GYPSUM WALLBOARD SURFACE) ON BOTH SIDES OF WALL ASSEMBLY.
      1. PACKING MATERIAL – (NOT SHOWN) – AS AN ALTERNATE TO ITEM B, NOM 1 IN. THICK POLYETHYLENE BACKER ROD MAY BE USED. THE BACKER ROD IS TO BE RECESSED WITHIN THE STEEL SLEEVE A MIN OF 1 IN. FROM EACH SURFACE OF WALL.
   C. FILL,VOID OR CAVITY MATERIALS* – CAULK – WHEN MINERAL WOOL BATT INSULATION IS USED, APPLIED TO FILL THE STEEL SLEEVE TO A MIN DEPTH OF 1/2 IN. ON BOTH SIDES OF WALL ASSEMBLY. WHEN BACKER ROD IS USED, A MIN THICKNESS OF 1 IN. OF CP–25WB+ CAULK IS REQUIRED FLUSH WITH SURFACE OF WALL. A NOM 1/4 IN. DIAM CONTINUOUS BEAD OF CAULK SHALL BE APPLIED AROUND THE CIRCUMFERENCE OF THE STEEL SLEEVE AT ITS EGRESS FROM THE GYPSUM WALLBOARD LAYERS ON BOTH SIDES OF THE WALL ASSEMBLY.

   MINNESOTA MINING & MFG CO – CP 25WB+
   *BEARING THE UL CLASSIFICATION MARKING

UNINSULATED PIPE

PIPE THRU 2 HOUR FIRE RATED WALL DETAIL (3 / P5.2)
NO SCALE

GENERAL NOTES: (APPLIES TO ALL DETAILS ON THIS PAGE)
1. FIRE RATED WALL DETAIL FOR REFERENCE ONLY.
2. EXACT WALL CONDITIONS AT PENETRATIONS SHALL BE VERIFIED PRIOR TO INSTALLATION AND THE APPROPRIATE RATING ASSEMBLY SHALL BE USED FOR THE TYPE OF PENETRATION.
3. FIRESTOPPING SHALL BE INSTALLED STRICTLY PER MANUFACTURER'S INSTALLATION INSTRUCTION'S.

tBP
architecture
planning
interiors
management
tBP/Architecture
1000 Burnett Avenue, Suite 140
Concord, CA 94520
p: 925.246.6419 f: 925.246.6495
architect

AINSWORTH ASSOCIATES
MECHANICAL ENGINEERS
SACRAMENTO, CA
consultant

name
address
city, state, zip
ph: fx:
agency

DEHNCERTION STAMP
ON OF THE STATE ARCHITECT
OR OF REGULATION WAIVED
APP. # 04-19025
DATE 11-15-04

SCIENCE BUILDING
LOS MEDANOS COLLEGE
Contra Costa Community College District
owner

tBP project number : 2024.1.00
file name:
drawn by: checked by:
date: NOVEMBER 15, 2004

Rev:	date:	description:

drawing title:
PLUMBING - DETAILS

LMC SCIENCE 313-023-T12.01-0-00.00
drawing no:
P5.2
drawing of ?

I:\2003-023\DWG\P5-1-2.dwg Time:Nov/12/2004-09:54am