STUDENT UNION

DIABLO VALLEY COLLEGE

321 GOLF CLUB ROAD

PLEASANT HILL, CA. 94523

INTERACTIVE RESOURCES PROJECT NO. 94087.04

CONTRA COSTA COMMUNITY COLLEGE DISTRICT

OCCUPANT LOAD

ROOM NO.	NAME	AREA SQ.FT.	OCCUPANCY	OCCUPANT LOAD FACTOR	NO. OF OCCUPANTS
FIRST FLOOR					
101	RECREATION ROOM	1,356	A-3	15	90
102	MEN'S TOILET	215	B-2	–	–
103	VESTIBULE	48	B-2	–	–
104	ELEVATOR MACHINE ROOM	26	–	–	–
105	ELEVATOR	34	–	–	–
106	LOWER ENTRY	704	B-2	15	47
107	STORAGE	78	–	–	–
108	JANITOR	77	–	–	–
109	WOMEN'S TOILET	215	B-2	–	–
110	ELECTRICAL/MECHANICAL ROOM	148	–	–	–
111	TRASH	63	–	–	–
112	CLASSROOM/KITCHEN	582	B-2	20	19
113	SERVICE COUNTER	188	B-2	200	1
114	DINING ROOM	1,188	A-3	15	79
115	KITCHEN STORAGE	74	–	–	–
TOTAL FIRST FLOOR OCCUPANTS: 236					
SECOND FLOOR					
201	COMPUTER ROOM	332	B-2	50	7
202	QUIET ROOM	1,299	B-2	50	26
203	UPPER ENTRY	615	B-2	15	41
204	CONFERENCE ROOM	1,107	A-3	15	74
205	OFFICE 1	476	B-2	100	5
206	ASDVC	241	B-2	100	3
207	ADVISOR OFFICE	122	B-2	100	1
208	WORKROOM	301	B-2	50	6
209	OFFICE 2	207	B-2	100	2
210	CORRIDOR	194	–	–	–
211	CLOSET	32	–	–	–
212	CLUB OFFICE	574	B-2	50	12
213	PRESIDENT'S OFFICE	124	B-2	100	1
TOTAL SECOND FLOOR OCCUPANTS: 178					
TOTAL BUILDING OCCUPANTS: 414					

ABBREVIATIONS

A.B.	ANCHOR BOLTS	JT.	JOINT
ACOUS.	ACOUSTICAL	JST.	JOIST
ADM.	ADMINISTRATIVE	L.	LONG(LENGTH)
ALT.	ALTERNATE	MAX.	MAXIMUM
ALUM.	ALUMINUM	M.B.	MACHINE BOLTS
APPROX.	APPROXIMATE	M.BD.	MARKER BOARD
ARCH.	ARCHITECTURAL	MECH.	MECHANICAL
BLDG.	BUILDING	MET.	METAL
BLK.	BLOCK	MEZZ.	MEZZANINE
BLKG.	BLOCKING	MFR.	MANUFACTURER
BM.	BEAM	MIN.	MINIMUM
B.N.	BOUNDARY NAIL	N/A	NOT APPLICABLE
BOT.	BOTTOM	N.I.C.	NOT IN CONTRACT
BRD.	BOARD	NOM.	NOMINAL
BTR.	BETTER	N.T.S.	NOT TO SCALE
CAB.	CABINET	O.C.	ON CENTER
CAC	CALIFORNIA ADMIN-ISTRATIVE CODE	O.H.	OPPOSITE HAND
CAT.	CATWALK	OLA	OFFICE OF LOCAL ASSISTANCE
CEM. PLAS.	CEMENT PLASTER	OPP.	OPPOSITE
CER.	CERAMIC	OSA	OFFICE OF THE STATE ARCHITECT
C.J.	CONSTRUCTION JOINT	PERIM.	PERIMETER
CLG.	CEILING	PBS	PUBLIC BUILDINGS SERVICE
CLR.	CLEAR	P.C.C.	PRECAST CONCRETE
C.O.	(GSA) CONTRACTING OFFICER	PL.	PLATE
COL.	COLUMN	P.L.	PROPERTY LINE
CONC.	CONCRETE	P.LAM.	PLASTIC LAMINATE
CONN.	CONNECTION	PLYWD.	PLYWOOD
CONT.	CONTINUOUS	P.N.	PLATE NAIL
CONTR.	CONTRACTOR	P.S.F.	POUNDS PER SQUARE FOOT
C.M.U.	CONCRETE MASONRY UNIT	P.S.I.	POUNDS PER SQUARE INCH
CSPE	CHLOROSULFONATED POLYETHYLENE ("HYPALON")	P.T.	PRESSURE TREATED
		PT.	POINT
DBL.	DOUBLE	R.	RISER
DET.	DETAIL	RAD.	RADIUS
D.F.	DOUGLAS FIR	REINF.	REINFORCEMENT
DIAG.	DIAGONAL	REQD.	REQUIRED
DIA.	DIAMETER	RESIL.	RESILIENT
DIM.	DIMENSION	R.O.	ROUGH OPENING
DN.	DOWN	R.S.	ROUGH SAWN
DP.	DEEP	RDWD.	REDWOOD
DR.	DOOR	RO.	ROUGH
D.S.	DOWNSPOUT	R.W.L.	RAIN WATER LEADER
EA.	EACH	SHT.	SHEET
E.F.	EACH FACE	S.H.	SINGLE HUNG
E.J.	EXPANSION JOINT	SIM.	SIMILAR
ELEV.	ELEVATION	SLDR.	SLIDER
ELEC.	ELECTRICAL	S.O.G.	SLAB ON GRADE
E.N.	EDGE NAIL	SPEC(S)	SPECIFICATION(S)
E.Q.	EQUAL	SQ.	SQUARE
EQPT.	EQUIPMENT	S.S.	STAINLESS STEEL
E.S.	EACH SIDE	S.S.P.	STANDARD STEEL PIPE
E.W.	EACH WAY	STRUC.	STRUCTURAL
EXIST.	EXISTING	SYM.	SYMMETRICAL
EXP.	EXPANSION		TREAD
EXT.	EXTERIOR	T.& B.	TOP AND BOTTOM
FDN.	FOUNDATION	T.BD.	TACKBOARD
FIN.	FINISH	T.& G.	TONGUE AND GROOVE
FIN. FL.	FINISH FLOOR	T.C.	TOP OF CURB
F.J.	FLOOR JOIST	TEL.	TELEPHONE
FL.	FLOOR	TERR.	TERRAZZO
FLUOR.	FLUORESCENT	T.O.C.	TOP OF CONCRETE
F.N.	FIELD NAIL	T.O.PL.	TOP OF PLATE LINE
F.O.C.	FACE OF CONCRETE	T.O.S.	TOP OF STEEL
F.O.F.	FACE OF FINISH	T.O.SF.	TOP OF SUBFLOOR
F.O.M.	FACE OF MASONRY	T.O.W.	TOP OF WALL
F.O.S.	FACE OF STUD	T.P.	TOP OF PAVEMENT
FRMG.	FRAMING	TRANSV.	TRANSVERSE
FT.	FOOT/FEET	TR.	TREATED
GA.	GAUGE	TYP.	TYPICAL
GAL.	GALLON	U.O.N.	UNLESS OTHERWISE NOTED
GALV.	GALVANIZED	VERT.	VERTICAL
G.I.	GALVANIZED IRON	VG.	VERTICAL GRAIN
GLB	GLUE LAMINATED BEAM	W.	WIDE
GRD.	GRADE	WASH.	WASHER
GSA	GENERAL SERVICES ADMINISTRATION	W/	WITH
G.S.M.	GALVANIZED SHEET METAL	W/C	WATER CLOSET
GYP. BD.	GYPSUM BOARD	WD.	WOOD
H.D.	HOLD-DOWN	W/O	WITHOUT
HMA	HAZARDOUS MATERIALS ABATEMENT	WP.	WATERPROOF
HORIZ.	HORIZONTAL	WPF.	WEATHERPROOF
H.S.B.	HIGH STRENGTH BOLTS	X	CROSS
HT.	HEIGHT		
HDR.	HEADER		
IN.	INCH(ES)		
I.D.	INSIDE DIAMETER		
INSUL.	INSULATION		

SYMBOLS

ȼ	AND
L	ANGLE
@	AT
℄	CENTER LINE
Φ	DIAMETER OR ROUND LINE
(E)	EXISTING
⊥	PERPENDICULAR
#	POUND OR NUMBER
℘	PLATE
(N)	NEW
WP,⌖	WORK POINT
	NOMINAL FLOOR LEVEL OR MATCH LINE
(4)---	COLUMN GRID
4	DOOR SYMBOL
4	WINDOW SYMBOL
4	SKYLIGHT SYMBOL
4 / A-4	SECTION SYMBOL, SECTION NUMBER, SHEET NUMBER
4 / A-4	DETAIL SYMBOL, DETAIL NUMBER, SHEET NUMBER
1 / A-4 (1, 2, 3, 4)	INTERIOR ELEVATION SYMBOL, DETAIL NUMBER, SHEET NUMBER
4	REVISION SYMBOL
	NORTH

VICINITY MAP

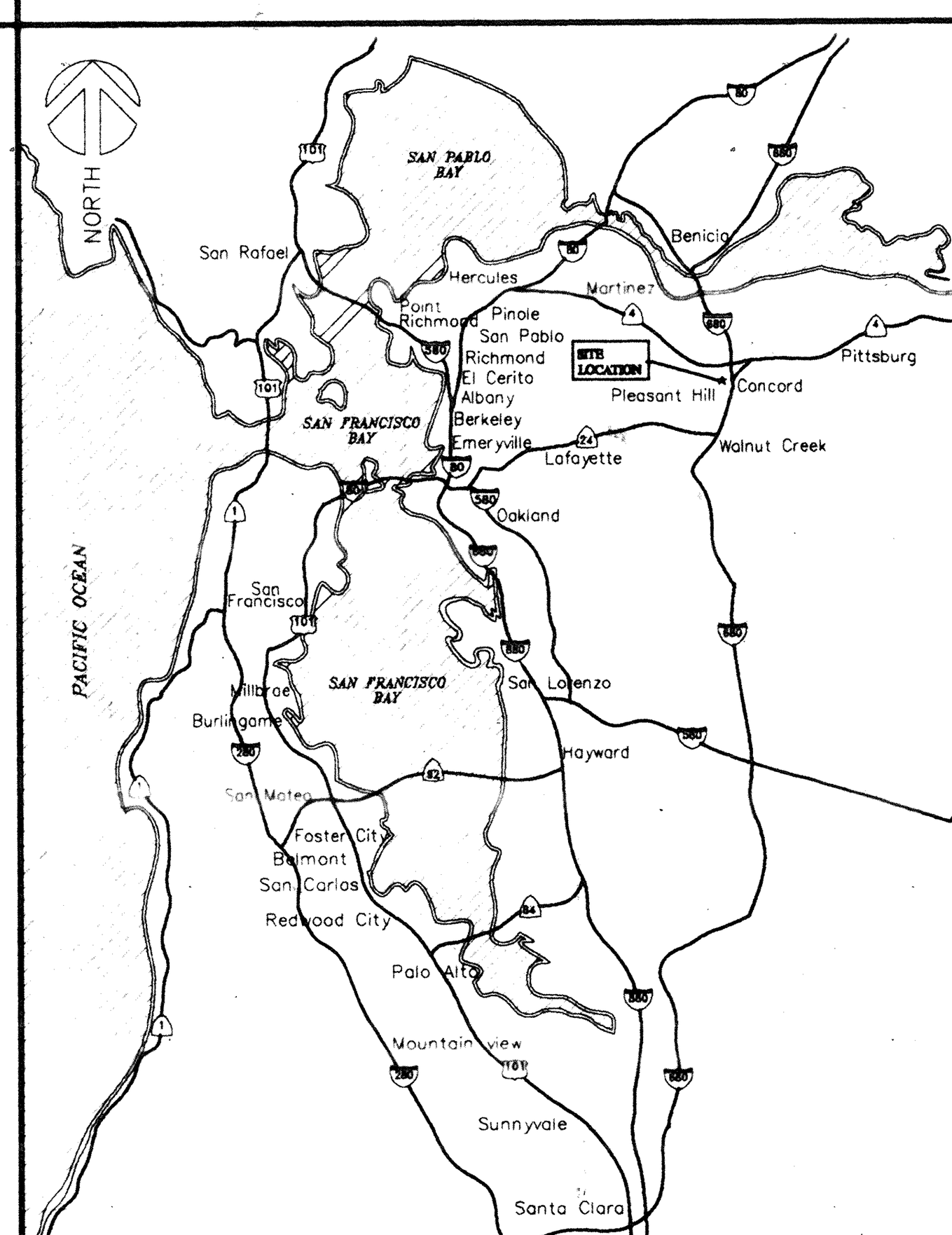

PROJECT DATA

PROJECT ADDRESS:	DIABLO VALLEY COLLEGE 321 GOLF CLUB ROAD PLEASANT HILL, CA. 94523
OWNER'S ADDRESS:	CONTRA COSTA COMMUNITY COLLEGE DISTRICT 500 COURT STREET MARTINEZ, CA. 94553 TEL: (415) 774-5802 FAX: (415) 744-5777 ATTN: THOMAS A. BECKETT DIRECTOR OF FACILITIES MAINTENANCE
SEISMIC CONSTRUCTION	SEISMIC ZONE 4 TYPE 5-UNRATED
BUILDING CODES	UBC 1991 WITH CURRENT CCR TITLE 24 AMMENDMENTS UMC NATIONAL ELECTRICAL CODE (NEC), 1993 NFPA 101 LIFE SAFETY CODE, 1994 UBC (SEISMIC), 1991
GROSS PROJECT AREA:	FIRST FLOOR: 5,803 SQ.FT. SECOND FLOOR: 6,941 SQ.FT. TOTAL: 12,744 SQ.FT.
NET ASSIGNABLE AREA:	FIRST FLOOR: 4,162 SQ.FT. SECOND FLOOR: 5,007 SQ.FT. TOTAL: 9,169 SQ.FT.

PROJECT TEAM

ARCHITECT:
INTERACTIVE RESOURCES, INC.
117 PARK PLACE
POINT RICHMOND, CA 94801
TEL: 510/236-7435
FAX: 510/232-5325

STRUCTURAL:
RAZZANO ASSOCIATES
366 40TH STREET
OAKLAND, CA. 94609
TEL. 510/6587825
FAX: 510/658-7090

MECHANICAL:
MECHANICAL DESIGN STUDIO
375 FREMONT ST.
SUITE 250
SAN FRANCISCO, CA. 94105
TEL: 415/284-0114
FAX: 415/284-0118

ELECTRICAL:
W.H.M. ENGINEER
1605 SCHOOL ST.
MORAGA, CA. 94556
TEL: 510/376-2902
FAX: 510/376-2904

CIVIL:
LEPTIEN CRONIN COOPER, INC.
3855 ALHAMDRA AVE
MARTINEZ, CA. 945553
TEL: 510/228-4218

FOOD SERVICE
EAST BAY RESTAURANT SUPPLY, INC.
49 FOURTH STREET
OAKLAND, CA. 94607
TEL: 510/465-4300
FAX: 510/465-3521

IRRIGATION SYSTEM CONSULTANT
RUSSELL D. MITCHELL & ASSOCIATES, INC.
2760 CAMINO DIABLO
WALNUT CREEK, CA. 94596
TEL: 510/939-3985

GENERAL NOTES

1. NEW CONSTRUCTION, IF SPECIFICALLY NOTED IN THE ARCHITECTURAL DRAWINGS, WILL EITHER BE UNPREFIXED OR PREFIXED BY "NEW OR (N)".
2. EXISITNG CONSTRUCTION, IF SPECIFICALLY NOTED IN THE ARCHITECTURAL DRAWINGS WILL ALWAYS BE PREFIXED BY "EXIST" OR (E).
3. THE INTENT OF CONTRACT DOCUMENTS IS TO COMPLETE THE PROJECT IN ACCORDANCE WITH TITLE 24, CALIFORNIA CODE OF REGULATIONS. SHOULD ANY CONDITIONS DEVELOP NOT COVERED BY THE CONTRACT DOCUMENTS WHEREIN THE FINISHED WORK WILL NOT COMPLY WITH THE SAID TITLE 24, CCR, A CHANGE ORDER DETAILING AND SPECIFYING THE REQUIRED WORK SHALL BE SUBMITTED TO, AND APPROVED BY THE OFFICE OF THE STATE ARCHITECT PRIOR TO PROCEEDING WITH THE WORK.
4. ALL WORK PERFORMED UNDER THIS CONTRACT IS TO COMPLY WITH THE APPROPRIATE PORTIONS OF TITLE 24, CCR, PARTS 1 THROUGH 5.
5. FOR MINIMUM NAILING, COMPLY WITH CCR T-24 PARTS 2, TABLE 25-Q NAILING SCHEDULE. SEE SHT. S1.1 FOR NAILING SCHEDULE.
6. ALL UNDERGROUND UTILITIES AND SIGNAL LINES: THIS INCLUDES ELECTRIC, WATER, STEAM SEWER, TELEPHONE, INTERCOM, ALL HEALTH, SAFETY, ALARM AND DATA COMMUNICATION LINES, SHALL BE BURIED WITH AN INSULATED COPPER #2 SIZE TRACER WIRE TIED TO CENTER AND THE DEEPEST LINE. ALSO ,PROVIDE A 6" (SIX INCH WIDTH) IDENTIFICATION OR CAUTION FOIL. TAPE LAID ON TOP OF THE BEDDING MATERIAL AT LEAST 6" (SIX INCHES) ABOVE THE TOP OF THE UPPERMOST LINE AT THE CENTER OF THE GROUP OF LINT. THE COPPER TRACER WIRE SHALL EXTEND AT LEAST THREE FEET BEYOND ALL ENDS OF LINES SECURELY TIED.
7. DEFERRED APPROVALS ITEMS TO ORS:
   - A. FIRE ALARM SYSTEM
   - B. KITCHEN FIRE SYSTEMS

INSTALLATION OF DEFERRED ITEMS SHALL NOT BE STARTED UNTIL WORKING DRAWINGS ARE APPROVED BY O.R.S.
PRIOR TO INSTALLATION, SUBMIT CALCULATIONS AND SHOP DRAWINGS MEMBERS SIZES, CONNECTION DETAILS AND SPECIFICATIONS DEMONSTRATIONS COMPLIANCE WITH TITLE 24 CCR FOR THE ARCHITECTS REVIEW AND FOR APPROVAL OF THE STRUCTURAL SAFETY SECTION; O.R.S.

SUBMIT SEPARATE SHOP DRAWINGS FOR THE FIRE ALARM SYSTEM TO THE ORS FIRE MARSHAL FOR REVIEW AND APPROVAL PRIOR TO INSTALLATION. PROVIDE VISUAL STROBE LIGHTS IN ALL AREAS WITH HIGH AMBIENT NOISE. AND PER SECTION 6004 CHAPT. 60, PART 2 , TITLE 24.

DIMENSIONS ARE TO CENTERLINE OF STUD, FACE OF STUD OR FACE OF CONCRETE UNLESS OTHER WISE NOTED

DRAWING INDEX

T1.1	TITLE SHEET
CIVIL:	
C1.1	SITE SURVEY
C1.2	GRADING PLAN
C1.3	UTILITY AND DRAINAGE LAYOUT
C1.4	CIVIL STANDARD DETAILS
ARCHITECTURAL:	
A1.1	SITE PLAN
A1.2	SITE DETAILS
A1.3	TRELLIS DETAILS
A2.1	FIRST FLOOR PLAN
A2.2	SECOND FLOOR PLAN
A2.3	ROOF PLAN
A2.4	FIRST FLOOR REFLECTED CEILING PLAN
A2.5	SECOND FLOOR REFLECTED CEILING PLAN
A3.1	BUILDING ELEVATIONS
A3.2	BUILDING ELEVATIONS
A3.3	BUILDING ELEVATIONS
A3.4	BUILDING SECTIONS
A3.5	BUILDING SECTIONS
A4.1	FINISH SCHEDULE
A4.2	DOOR/HARDWARE SCHEDULE
A4.3	WINDOW SCHEDULE
A5.1	INTERIOR ELEVATIONS
A5.2	INTERIOR ELEVATIONS
A5.3	INTERIOR ELEVATIONS
A5.4	INTERIOR ELEVATIONS
A5.5	INTERIOR ELEVATIONS
A5.6	INTERIOR ELEVATIONS
A7.1	STAIR AND RAILING DETAILS
A7.2	ELEVATOR PLANS SECTIONS & DETAILS
A8.1	ROOF DETAILS
A8.2	EXTERIOR DETAILS
A8.3	EXTERIOR DOOR AND WINDOW DETAILS
A8.4	EXTERIOR DETAILS
A9.1	CEILING DETAILS
A9.2	INTERIOR DETAILS
A9.3	INTERIOR DETAILS
STRUCTURAL:	
S1.1	GENERAL NOTES
S1.2	TYPICAL DETAILS
S1.3	TYPICAL DETAILS
S2.1	FOUNDATION AND FIRST FLOOR FRAMING PLAN
S2.2	SECOND FLOOR FRAMING PLAN
S2.3	ROOF FRAMING PLAN
S3.1	STRUCTURAL SECTIONS
S3.2	STRUCTURAL SECTIONS
S3.3	STRUCTURAL SECTIONS
S3.4	STRUCTURAL SECTIONS
S3.5	STRUCTURAL SECTIONS
KITCHEN:	
F21	FOODSERVICE GENERAL INFORMATION & NOTES
FS2	FOODSERVICES EQUIPMENT PLAN SCHEDULE & NOTES
FS3	FOODSERVICES PLUMBING PLAN SCHEDULE & NOTES
FS4	FOODSERVICES ELECTRICAL PLAN SCHEDULE & NOTES
FS5	FOODSERVICES HOOD INFORMATION DETAILS
PLUMBING:	
P-1	SCHEDULES,LEGEND, AND DRAWING INDEX
P-2	FIRST FLOOR PLAN
P-3	SECOND FLOOR PLAN
P-4	ROOF PLAN
P-5	PARTIAL FLOOR PLANS
MECHANICAL:	
M-1	SCHEDULES,LEGEND, AND DRAWING INDEX
M-2	FIRST FLOOR PLAN
M-3	SECOND FLOOR PLAN
M-4	ROOF PLAN
M-5	CONTROL DIAGRAM
M-6	PARTIAL FLOOR PLANS
M-7	TITLE 24 DOCUMENTATION
ELECTRICAL:	
E 0.1	SYMBOLS LIST NOTES AND SCHEDULE
E 0.2	PANEL SCHEDULE AND RISER DIAGRAMS
E 1.1	FIRST FLOOR LIGHTING PLAN
E 1.2	SECOND FLOOR LIGHTING PLAN
E 2.1	FIRST FLOOR POWER PLAN
E 2.2	SECOND FLOOR POWER PLAN
E 2.3	KITCHEN ELECTRICAL PLAN
E 2.4	ELECTRICAL ROOF PLAN
E 2.5	PANEL SCHEDULES AND RISER DIAGRAM
EC1	COMMUNICATIONS 1ST. FLOOR PLAN
EC2	COMMUNICATIONS 2ND. FLOOR PLAN
LANDSCAPE:	
L1.0	LANDSCAPE PLAN AND DETAILS
L2.0	IRRIGATION PLAN
L2.1	IRRIGATION LEGEND AND NOTES
L2.2	IRRIGATION DETAILS

LOCATION MAP

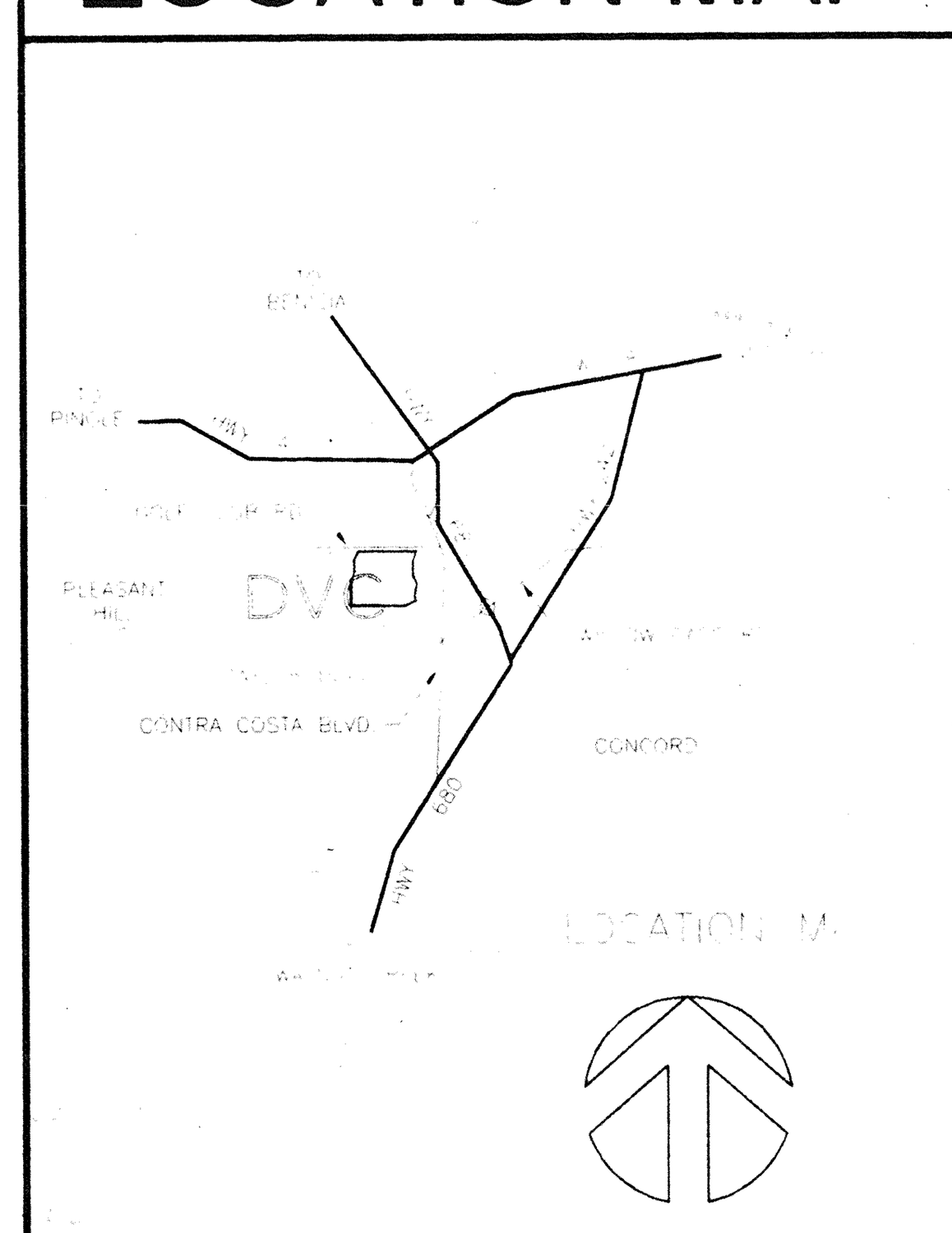

CAMPUS MAP

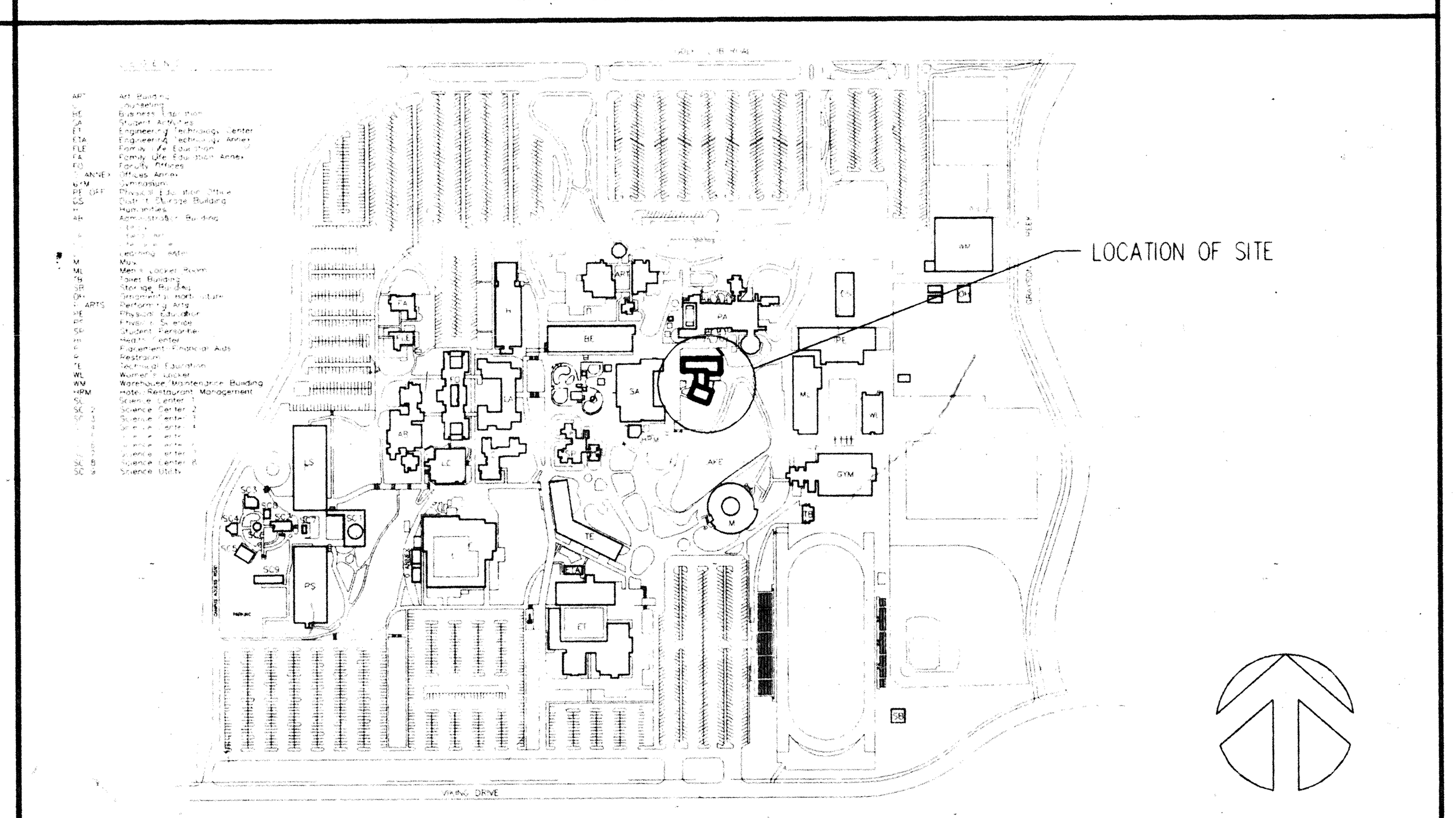

AS BUILT
CORRECTIONS BY HAF
CONTRACT NO.
DATE OCT 1 97.

REVISION	DATE	DESCRIPTION	INITIAL

ISSUE FOR PROGRESS REVIEW	09/18/95
ISSUE FOR PLAN CHECK	O.R.S.10/9/95
ISSUE FOR PERMIT	04/04/96
ISSUE FOR BID	4/4/96
ISSUE FOR CONSTRUCTION	

SEAL:
LICENSED ARCHITECT PAUL D. CIANFICHI No. C 14,226 REN 10-31-97 STATE OF CALIFORNIA

CONSULTANT:

INTERACTIVE RESOURCES
ARCHITECTURE • PLANNING • ENGINEERING
117 PARK PLACE
POINT RICHMOND
CALIFORNIA 94801
(510) 236-7435
(FAX.) 232-5325

PROJECT:
STUDENT UNION

Diablo Valley College
321 Golf Club Road
Pleasant Hill, CA. 94523

Contra Costa Community College District

STAMP:
APPL 6 41 39
ROTH 4-17-96

APPL. NUMBER:

KEY PLAN:
LICENSED ARCHITECT 10/31/97

SHEET TITLE:
TITLE SHEET

SCALE	AS NOTED	
PROJ. NO.	A94087.04	
PREPARATION AND REVIEW		
PURPOSE	**PERSONAL/INITIAL**	**DATE**
DRAWN BY	IRI	09/18/95
PROJ. MGR.	GYN	09/18/95
PEER REVIEW	TKB	04/11/96

SHEET NUMBER:
T 1.1
NUMBER: OF:

L:\A\94087.04\CAD\T1-1.DWG



AS BUILT
CORRECTIONS BY HAF
CONTRACT NO.
DATE OCT 1 97

FOR REFERENCE ONLY

REGISTERED PROFESSIONAL ENGINEER
ALBERT A. MORRIS
No. 19823
Exp. 9/30/97
CIVIL
STATE OF CALIFORNIA

LEPTIEN CRONIN-COOPER, INC.
3855 Alhambra Ave.
MARTINEZ, CALIFORNIA 94553
95027.03

REVISION	DATE	DESCRIPTION	INITIAL

ISSUE FOR PROGRESS REVIEW	DATE:
ISSUE FOR PLAN CHECK	ORS 10/9/95
ISSUE FOR PERMIT	
ISSUE FOR BID	4/4/96
ISSUE FOR CONSTRUCTION	

SEAL:

LICENSED ARCHITECT
10/21/96

CONSULTANT:

LEPTIEN CRONIN-COOPER, INC.
3855 Alhambra Ave.
MARTINEZ, CALIFORNIA 94553

INTERACTIVE RESOURCES

ARCHITECTURE • PLANNING • ENGINEERING

117 PARK PLACE
POINT RICHMOND
CALIFORNIA 94801
(510) 236-7435
(FAX.) 232-5325

PROJECT:

STUDENT UNION

Diablo Valley College
321 Golf Club Road
Pleasant Hill, CA. 94523

Contra Costa
Community College District

STAMP:

APPL. NUMBER:

KEY PLAN:

SHEET TITLE:

SITE SURVEY

SCALE	1" = 16'
PROJ. NO.	A94087.04

PREPARATION AND REVIEW

PURPOSE	PERSONAL/INITIAL	DATE
DRAWN BY	AAM	10/2/95
PROJ. MGR.	GYN	
PEER REVIEW		

SHEET NUMBER:

C 1.1

NUMBER: OF:

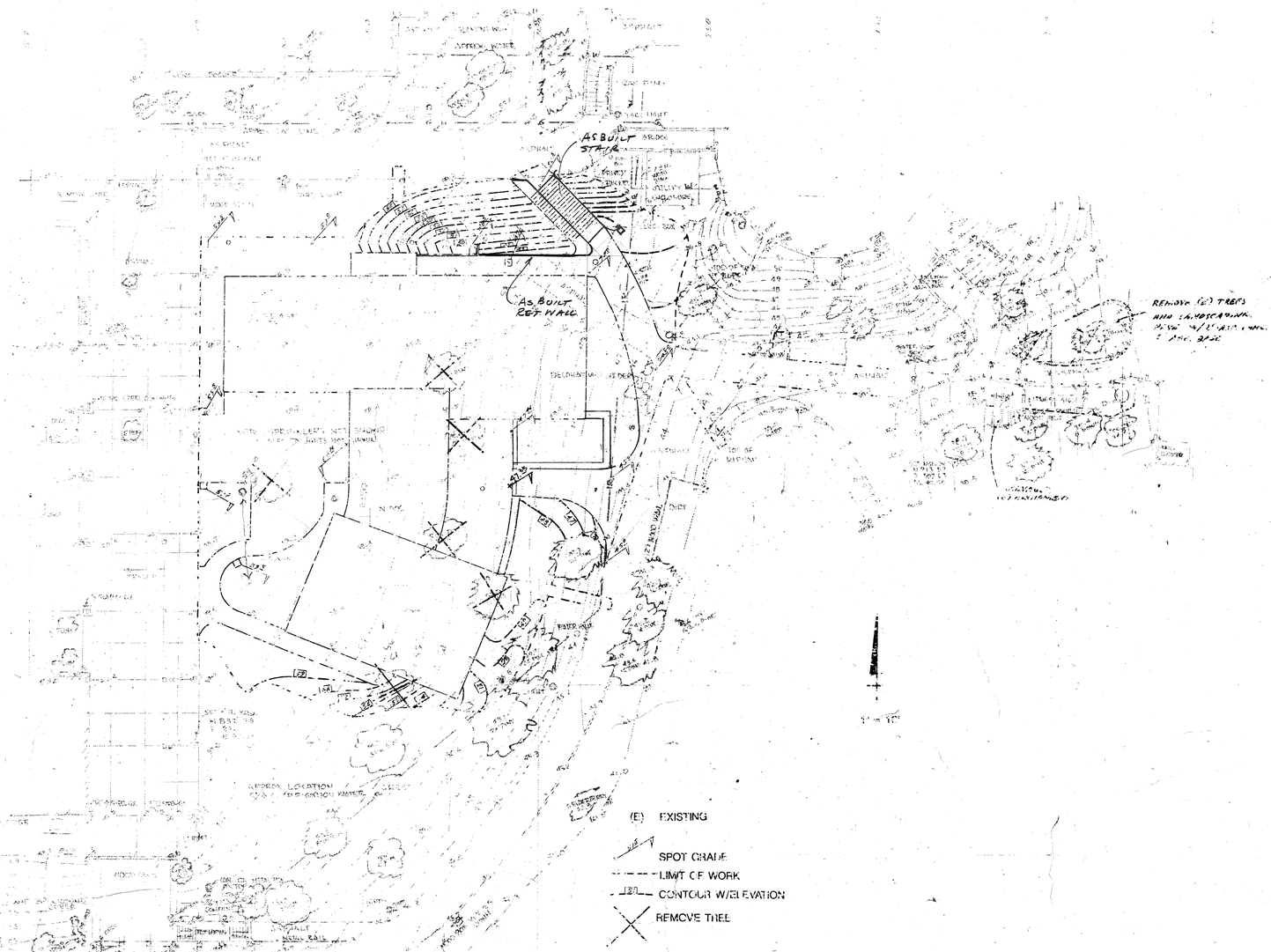

REVISION	DATE	DESCRIPTION	INITIAL
1	3-27-96	GENERAL	MM

ISSUE FOR PROGRESS REVIEW DATE:
ISSUE FOR PLAN CHECK
ISSUE FOR PERMIT
ISSUE FOR BID 4/4/96
ISSUE FOR CONSTRUCTION

SEAL:

10/31/98

CONSULTANT:

LEPTIEN CRONIN-COOPER, INC.
3855 Alhambra Ave
MARTINEZ, CALIFORNIA 94553

INTERACTIVE RESOURCES

ARCHITECTURE • PLANNING • ENGINEERING

117 PARK PLACE
POINT RICHMOND
CALIFORNIA 94801
(510) 236-7435
(FAX) 232-9325

PROJECT:

STUDENT UNION

Diablo Valley College
321 Golf Club Road
Pleasant Hill, CA. 94523

Contra Costa
Community College District

STAMP:

APPL. NUMBER:

KEY PLAN:

SHEET TITLE:

GRADING PLAN

SCALE	1" = 10'
PROJ. NO.	A94087.04

PREPARATION AND REVIEW		
PURPOSE	PERSONAL/INITIAL	DATE
DRAWN BY	MM	10/2/98
PROJ. MGR.	GYN	
PEER REVIEW		

SHEET NUMBER:

C 1.2

NUMBER: OF:

REGISTERED PROFESSIONAL ENGINEER
ALBERT A. MORRIS
No. 19823
Exp. 9/30/97
CIVIL
STATE OF CALIFORNIA

AS BUILT
CORRECTIONS BY: HAF
CONTRACT NO.
DATE: OCT / 97

LEPTIEN CRONIN-COOPER, INC.
3855 Alhambra Ave.
MARTINEZ, CALIFORNIA 94553
94087.04

SEE ELEC DWGS FOR ELEC & COMM CONDUIT

SEE DWG E 0.1 FOR ADDITIONAL ELEC DATA.

1" = 8'

1-4"C w/SECONDARY 1-3"C SPARE

AREA DRAIN W/ RISER TO PERF PIPE

AS BUILT DI. 1-2"C FOR IRR. WIRING

3" GAS (-) 4'-0

AS BUILT CURB

4" PERF PIPE

TYPE BK DI 59.5 G 55.5 INV

N983.0

AS BUILT 6" RWL (-) 3'-0

4" RWL

3' RWL

INVERT EL. 45'-6"

2" COPPER WATER UNDER CONC. SLAB

F.D.

ADAPTER

IRRIGATION CONTROLLER

CONN. CONDUIT 2-3"ø, 2-2"ø, 1-1¼"ø & 2-¾"ø UNDER CONC SLAB (-) 2'0

AS BUILT 6" STORM (-) 2'0

BLOCK RET. WALL

T-1 TRANSFORMER PAD

2-4"C (-) 3'-6 HIGH VOLTAGE

1-4"C & 1-3"C SPARE

COMMUNICATIONS PULL BOX

2-3"ø, 2-2"ø, 1-1¼"ø, 2-¾"ø } COMM. CONDUIT (-) 2'0 (ALL EMPTY) ± 100'

C.O. 46.2 RIM 43.0 INV

C.O. 46.85 RIM 43.0 INV

C.O. 40.5 RIM 34.2 INV

C.O. 45.4 RIM 40.3 INV

N950.6

N952.0

E 247.0

E 215.8

3" SEWER

2.5" WATER

6" VALVE & TEE

6" WATER

2.5" VALVE REQUIRED

10 MIL

F.H.

6"W

6" WATER

4'-0 ±

2½"x6" RED.

TYPE BK DI 59.5 G 56.3 INV

N932.9

AS BUILT 6" RWL

N921.1

TYPE BK DI 59.5 G 57.0 INV

N886.2

E 141.4

C.O. 47.35 RIM 43.5 INV

N921.0

E 136.2

FLOOR DRAIN 47.26 RIM 43.2 INV

N909.83

192.83

4" STORM

6" STORM

6" SEWER

C.O. 47.3 RIM 42.6 INV

PROSPECT (E) 6" RWL CONNECT NEW 6" RWL AT JOINT

6" RWL

(E) 6" RWL

E 197.2

N865.8

N863.2

C.O. 49.5 RIM 41.3 INV

C.O. 49.5 RIM 43.6 INV CONNECT FOUND DRAIN HERE

FOUNDATION DRAIN SEE S-1

N930.0 +/-

OUTLET 40.5 INV

SAME

EXIST 8" VCP S

EXIST 8" WATER

EXIST GAS

EXIST BUILDING

NEW 6" WATER VALVE

6" WATER

3" GAS

8" SEWER

7'-6

7'-6

7'-6

6" WATER

CONSTRUCT SAN. MH 34.0 RIM 28.0 INV IN 27.4 +/- INV (E)

NS36.0

INVERT (-) 5'-4"

NEW VALVE

39'-4"

INSTALL 6" VALVE & TEE IN (E) 6" WATER

LEGEND

(E)	EXISTING
C.O.	CLEANOUT
G	GRATE ELEV.
INV.	INVERT ELEV.
N	NORTH COORDINATE
E	EAST COORDINATE
DI	DROP INLET
RWL	RAINWATER LINE
RIM	RIM ELEV.

REGISTERED PROFESSIONAL ENGINEER ALBERT A. MORRIS No. 19823 Exp. 9/30/97 CIVIL STATE OF CALIFORNIA

AS BUILT
CORRECTIONS BY HAF
CONTRACT NO.
DATE OCT. 97

LEPTIEN CRONIN-COOPER, INC.
3855 Alhambra Ave.
MARTINEZ, CALIFORNIA 94553
(510) 228-4620

REVISION	DATE	DESCRIPTION
		3.5" W. DIGITAL CONT'L P.M. ADD.

ISSUE FOR PROGRESS REVIEW	DATE
ISSUE FOR PLAN CHECK	
ISSUE FOR PERMIT	
ISSUE FOR BID	2/14/96
ISSUE FOR CONSTRUCTION	

SEAL:

CONSULTANT:

LEPTIEN CRONIN-COOPER, INC.
3855 Alhambra Ave.
MARTINEZ, CALIFORNIA 94553

INTERACTIVE RESOURCES

ARCHITECTURE • PLANNING • ENGINEERING
117 PARK PLACE
POINT RICHMOND
CALIFORNIA 94801
(510) 236-7435
(FAX) 232-5325

PROJECT:

STUDENT UNION

Diablo Valley College
321 Golf Club Road
Pleasant Hill, CA. 94523

Contra Costa Community College District

STAMP:

LS GR 4-17-96

APPL. NUMBER:

KEY PLAN:

SHEET TITLE:

UTILITY & DRAINAGE LAYOUT

SCALE	1" = 8'
PROJ. NO.	A94087.04

PREPARATION AND REVIEW		
PURPOSE	PERSONAL/INITIAL	DATE
DRAWN BY	MA	10/2/96
PROJ. MGR.	GYN	
PEER REVIEW		

SHEET NUMBER:

C 1.3

SEC. 28-15

CENTRAL CONTRA COSTA SANITARY DISTRICT
MARTINEZ, CALIFORNIA

STANDARD MANHOLE & FRAME COVER

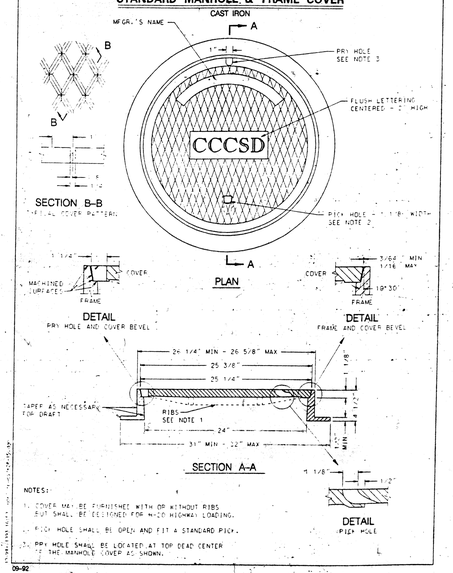

NOTES:
1. COVER MAY BE FURNISHED WITH OR WITHOUT RIBS BUT SHALL BE DESIGNED FOR H-20 HIGHWAY LOADING.
2. PICK HOLE SHALL BE OPEN AND FIT A STANDARD PICK.
3. PRY HOLE SHALL BE LOCATED AT TOP DEAD CENTER OF THE MANHOLE COVER AS SHOWN.

09-92

MANHOLE COVER

SEC. 28-01

CENTRAL CONTRA COSTA SANITARY DISTRICT
MARTINEZ, CALIFORNIA

STANDARD MAIN MANHOLE
FOR 17" OR SMALLER LINES

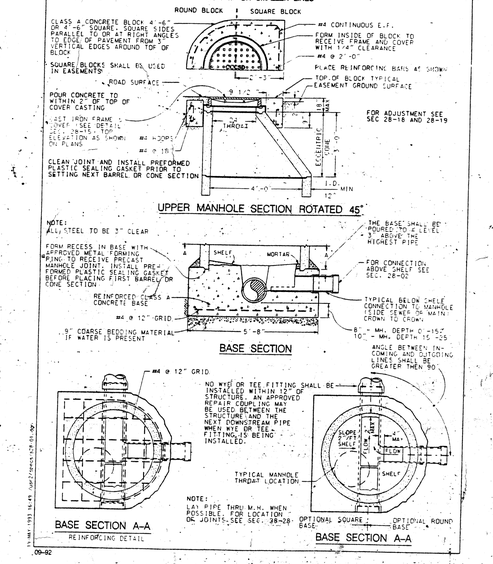

09-92

STANDARD MANHOLE

CUSTOM PRECAST CONCRETE DROP INLETS

Date	MARCH, 1987	Dwg. No.	D1
Rev.	1-26-88	Page No.	1-1

Santa Rosa Cast Products Company 471 WEST COLLEGE AVE. • SANTA ROSA, CA 95401 • (707) 546-5016

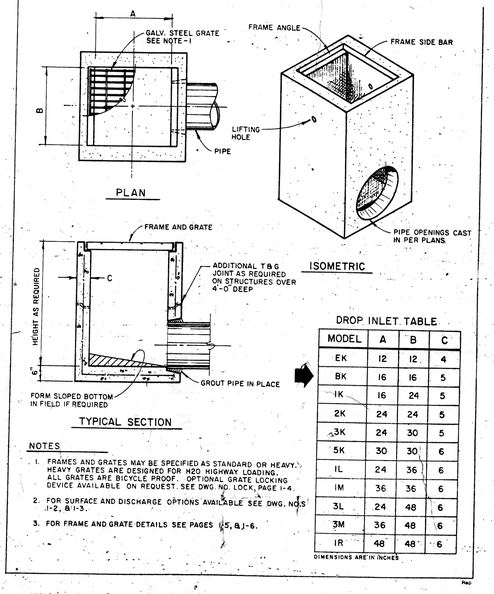

DROP INLET TABLE

MODEL	A	B	C
EK	12	12	4
BK	16	16	5
IK	16	24	5
2K	24	24	5
△3K	24	30	5
5K	30	30	6
IL	24	36	6
IM	36	36	6
3L	24	48	6
3M	36	48	6
IR	48	48	6

DIMENSIONS ARE IN INCHES

NOTES

1. FRAMES AND GRATES MAY BE SPECIFIED AS STANDARD OR HEAVY. HEAVY GRATES ARE DESIGNED FOR H20 HIGHWAY LOADING. ALL GRATES ARE BICYCLE PROOF. OPTIONAL GRATE LOCKING DEVICE AVAILABLE ON REQUEST. SEE DWG. NO. LOCK, PAGE I-4.
2. FOR SURFACE AND DISCHARGE OPTIONS AVAILABLE SEE DWG. NOS. I-2, & I-3.
3. FOR FRAME AND GRATE DETAILS SEE PAGES I-5, & I-6.

Rev.

TYPE BK INLET

SEC. 28-24

CENTRAL CONTRA COSTA SANITARY DISTRICT
MARTINEZ, CALIFORNIA

TRENCH STRUCTURAL DETAIL

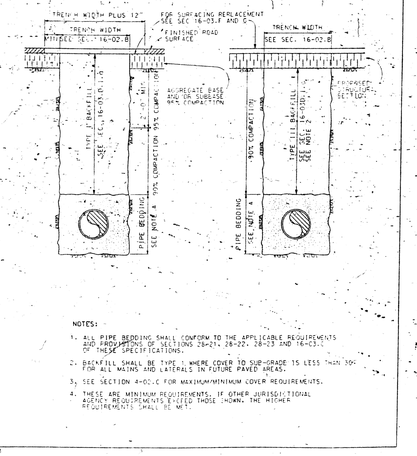

NOTES:
1. ALL PIPE BEDDING SHALL CONFORM TO THE APPLICABLE REQUIREMENTS AND PROVISIONS OF SECTIONS 28-21, 28-22, 28-23 AND 16-03.C OF THESE SPECIFICATIONS.
2. BACKFILL SHALL BE TYPE I WHERE COVER TO SUB-GRADE IS LESS THAN 30" FOR ALL MAINS AND LATERALS IN FUTURE PAVED AREAS.
3. SEE SECTION 4-01.C FOR MAXIMUM/MINIMUM COVER REQUIREMENTS.
4. THESE ARE MINIMUM REQUIREMENTS. IF OTHER JURISDICTIONAL AGENCY REQUIREMENTS EXCEED THOSE SHOWN, THE HIGHER REQUIREMENTS SHALL BE MET.

04-93

TRENCH DETAIL

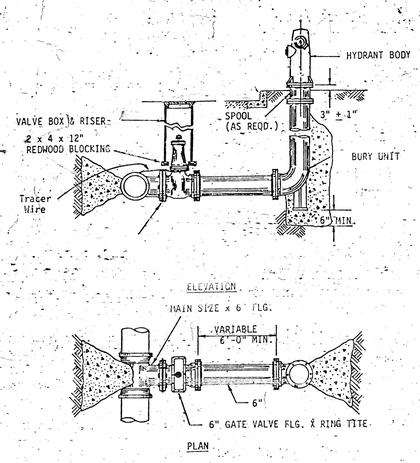

NOTES:
FIRE HYDRANT INSTALLATIONS SHALL COMPLY WITH FIRE DISTRICT REQUIREMENTS.

ENCASE ALL METALLIC SURFACES BELOW GROUND WITH POLYETHYLENE.

FIRE HYDRANT AND VALVE

AS BUILT
CONTRACTOR HAF
DATE OCT 1 97

REGISTERED PROFESSIONAL ENGINEER ROBERT A. MUNN No. 19823 Exp. 9/30/97 CIVIL STATE OF CALIFORNIA

LEPTIEN CRONIN-COOPER, INC.
3855 Alhambra Ave.
MARTINEZ, CALIFORNIA 94553
95027.03

REVISION	DATE	DESCRIPTION	INITIAL

	DATE
ISSUE FOR PROGRESS REVIEW	
ISSUE FOR PLAN CHECK	
ISSUE FOR PERMIT	
ISSUE FOR BID	4/4/96
ISSUE FOR CONSTRUCTION	

SEAL

LICENSED ARCHITECT ROBERT D. CRANDON C-5310 10/31/97 STATE OF CALIFORNIA

CONSULTANT

LEPTIEN CRONIN-COOPER, INC.
3855 Alhambra Ave.
MARTINEZ, CALIFORNIA 94553

INTERACTIVE RESOURCES

ARCHITECTURE • PLANNING • ENGINEERING
117 PARK PLACE
POINT RICHMOND
CALIFORNIA 94801
(510) 236-7435
(FAX) 232-5325

PROJECT:
STUDENT UNION

Owner:
[illegible]
2121 Old Old Road
Pleasant Hill, CA 9[illegible]

Contact:
[illegible]

STAMP:

APPROVED
APR 6 A.J. 3.9
DS GR
4-17-96

APPL. NUMBER:

KEY PLAN:

SHEET TITLE:
CIVIL STANDARD DRAWINGS

SCALE	AS SHOWN
PROJ. NO.	A94087.04

PREPARATION AND REVIEW

PURPOSE	PERSONAL/INITIAL	DATE
DRAWN BY	AAM	3/22/96
PROJ. MGR.	GYN	
PEER REVIEW		

SHEET NUMBER:
C
1.4

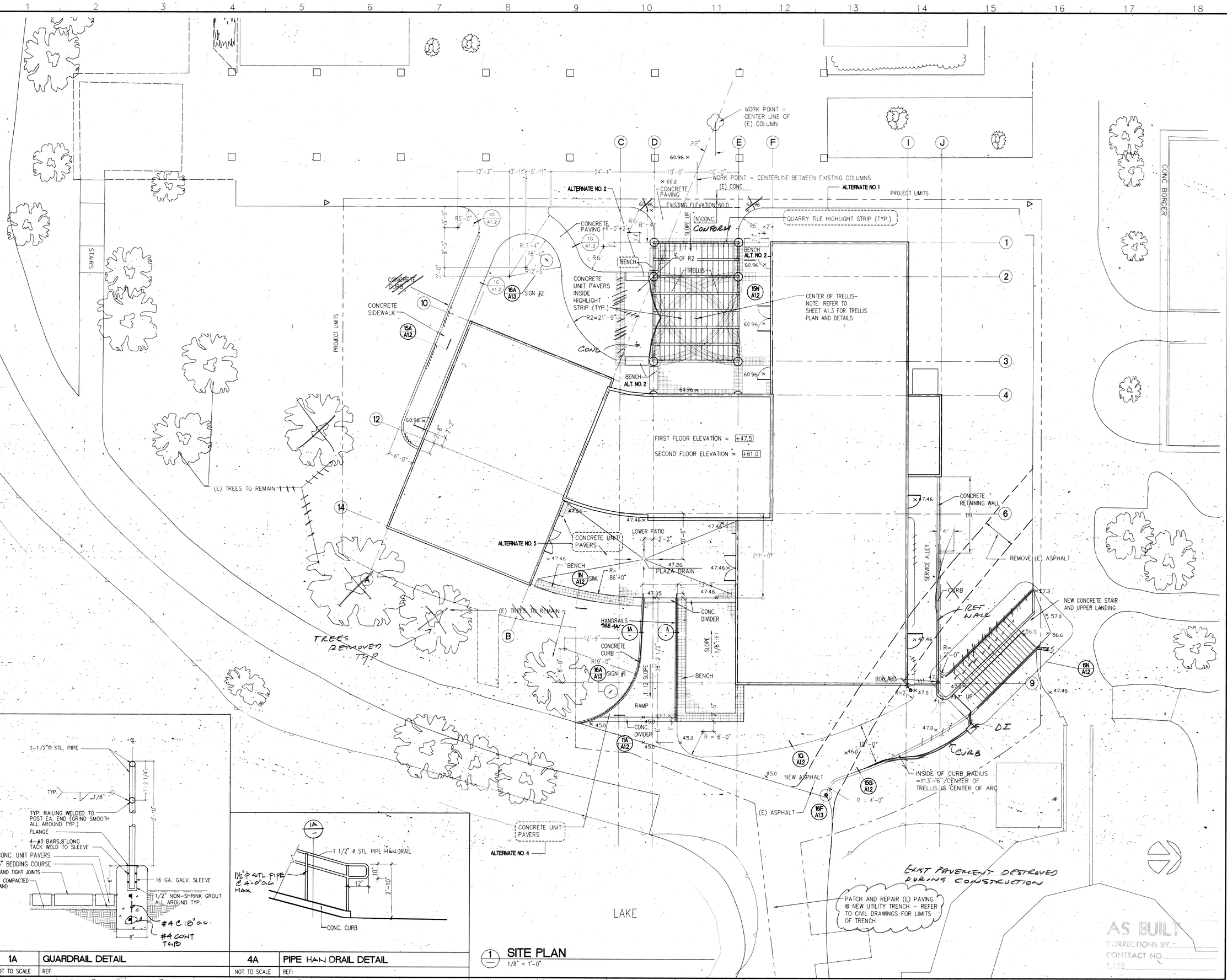

1 SITE PLAN
1/8" = 1'-0"

1A	GUARDRAIL DETAIL
NOT TO SCALE	REF:

4A	PIPE HAN DRAIL DETAIL
NOT TO SCALE	REF:

REVISION	DATE	DESCRIPTION	INITIAL

ISSUE FOR PROGRESS REVIEW	09/18/95
ISSUE FOR PLAN CHECK	O.R.S.10/9/95
ISSUE FOR PERMIT	04/04/96
ISSUE FOR BID	4/4/96
ISSUE FOR CONSTRUCTION	

SEAL:

LICENSED ARCHITECT PAUL D. CIANFICO No. C-5319 REN. 10-31-97 STATE OF CALIFORNIA

CONSULTANT:

INTERACTIVE RESOURCES

ARCHITECTURE • PLANNING • ENGINEERING

117 PARK PLACE
POINT RICHMOND
CALIFORNIA 94801
(510) 236-7435
(FAX) 232-5325

PROJECT:

STUDENT UNION

Diablo Valley College
321 Golf Club Road
Pleasant Hill, CA. 94523

Contra Costa Community College District

STAMP:

APPL. NUMBER:

KEY PLAN:

SHEET TITLE:

SITE PLAN

SCALE	1/16" = 1'-0"
PROJ. NO.	A94087.04

PREPARATION AND REVIEW

PURPOSE	PERSONAL/INITIAL	DATE
DRAWN BY	IRI	09/18/95
PROJ. MGR.	GYN	09/18/95
PEER REVIEW	TKB	04/11/96

SHEET NUMBER:

A 1.1

NUMBER: OF:

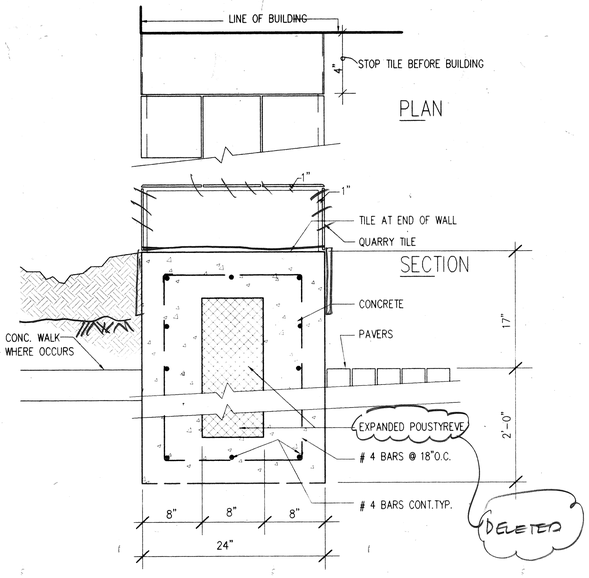

1N BENCH DETAIL

1 1/2"=1'-0" REF: (DVCDET31)

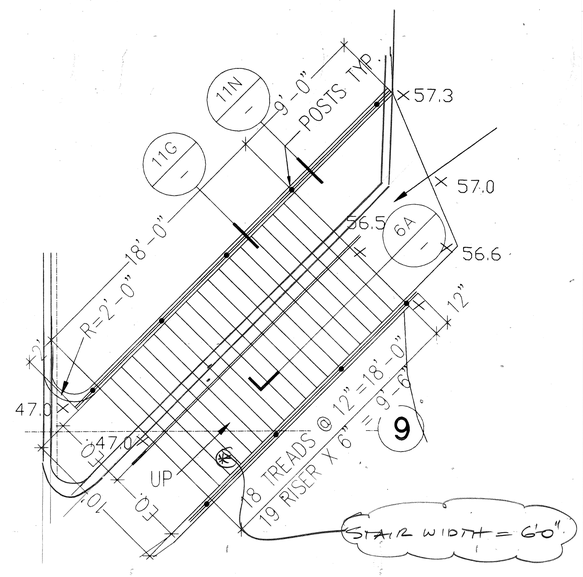

6N STAIR DETAIL

3/8"=1'-0" REF: (1-2DET2P)

14.

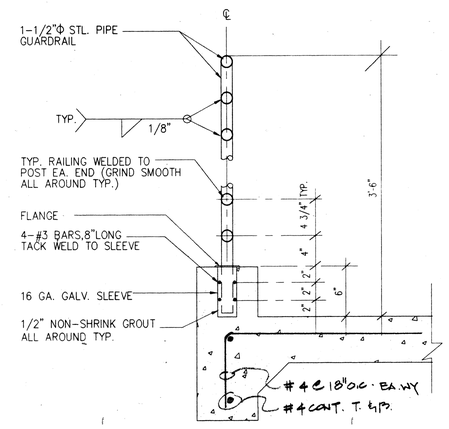

11N GUARDRAIL DETAIL

1 1/2"=1'-0" REF: (1-2DET3B)

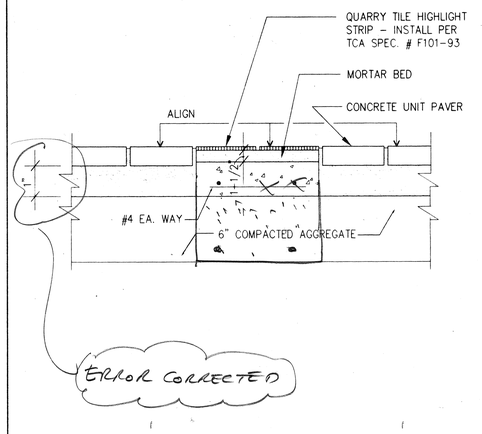

15N TILE HIGHLIGHT DETAIL

1 1/2"=1'-0" REF: (1-2DET4B)

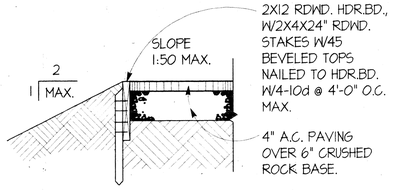

1G REDWOOD HEADER BOARD DETAIL

NOT TO SCALE REF: (2458DT25)

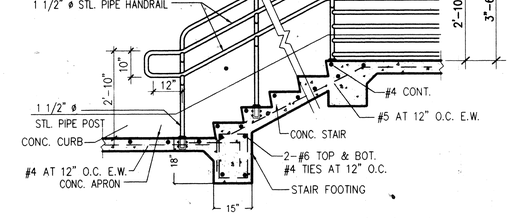

6G PIPE GUARDRAIL DETAIL

3/8" = 1'-0" REF: (1-2DET9)

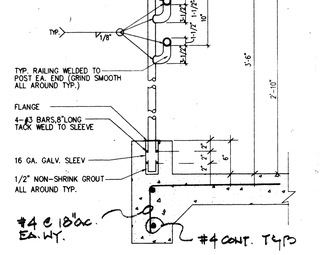

11G BRACKET • CONCRETE CURB DETAIL

1 1/2"=1'-0" REF: (1-2DET7B)

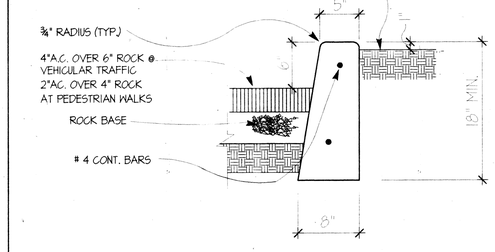

15G CONCRETE CURB DETAIL

1 1/2"=1'-0" REF: (1-2DET8B)

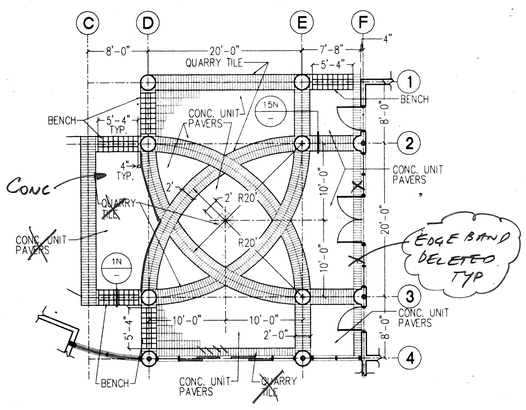

1A BRICK PAVING PATTERN

1/8" = 1'-0" REF: (BRICKPAVING)

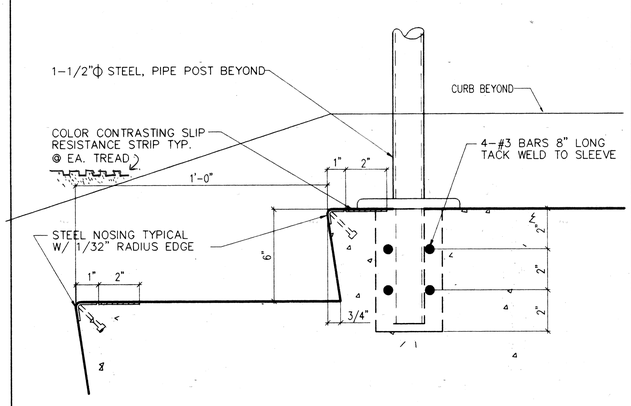

6A

3"= 1'-0" REF: (1-2DET11)

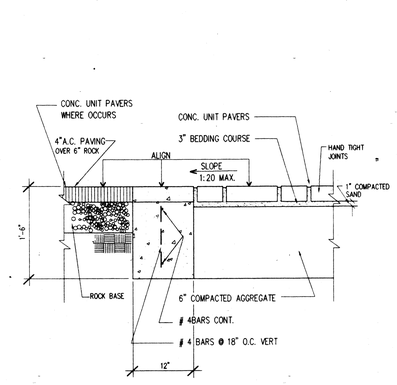

11A

1 1/2"=1'-0" REF: (1-2DET11B)

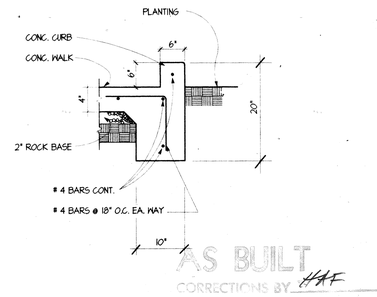

AS BUILT
CORRECTIONS BY HAF
CONTRACT NO.
DATE OCT 197

15A CONCRETE CURB AND GUTTER

NOT TO SCALE REF: (1-2DET12B)

REVISION	DATE	DESCRIPTION	INITIAL
ISSUE FOR PROGRESS REVIEW		09/18/95	
ISSUE FOR PLAN CHECK		O.R.S.10/9/95	
ISSUE FOR PERMIT		04/04/96	
ISSUE FOR BID		4/4/96	
ISSUE FOR CONSTRUCTION			

SEAL:

LICENSED ARCHITECT RAUL D. CIANCHETTA 23004 REN. 10-31-97 STATE OF CALIFORNIA

CONSULTANT:

INTERACTIVE RESOURCES
ARCHITECTURE • PLANNING • ENGINEERING
117 PARK PLACE
POINT RICHMOND
CALIFORNIA 94801
(510) 236-7435
(FAX.) 232-5325

PROJECT:

STUDENT UNION

Diablo Valley College
321 Golf Club Road
Pleasant Hill, CA. 94523

Contra Costa Community College District

STAMP:

APPL 6 4 1 7 9
APPL. NUMBER: 4-17-96

KEY PLAN:

SHEET TITLE:

SITE DETAILS

SCALE	AS NOTED	
PROJ. NO.	A94087.04	
PREPARATION AND REVIEW		
PURPOSE	PERSONAL/INITIAL	DATE
DRAWN BY	IRI	09/18/95
PROJ. MGR.	GYN	09/18/95
PEER REVIEW	TKB	04/11/96

SHEET NUMBER:

A 1.2

NUMBER: OF:

L:\A\94087.04\CAD\A12.DWG

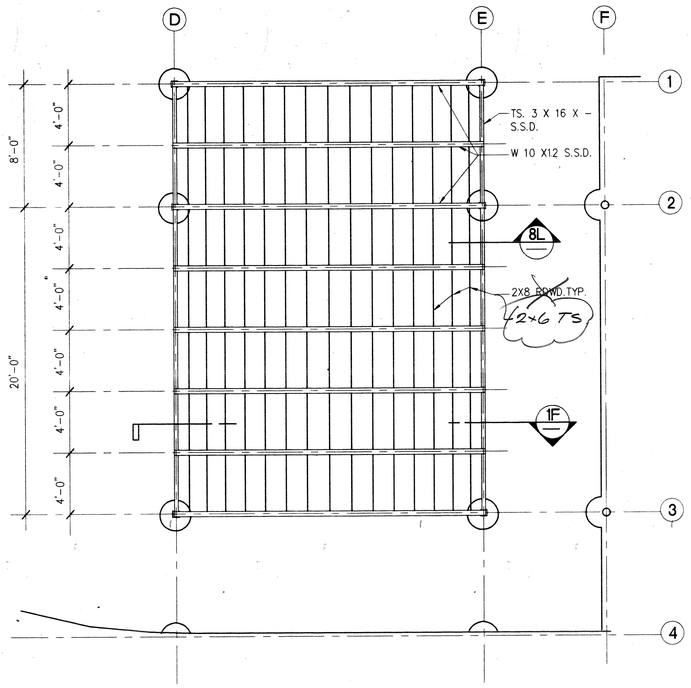

ALTERNATE # 3

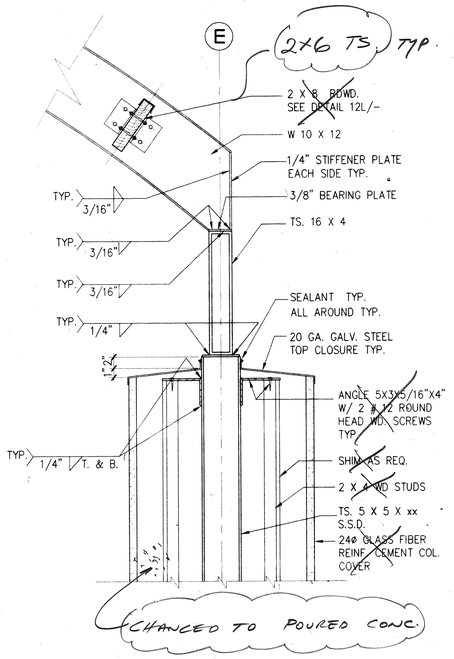

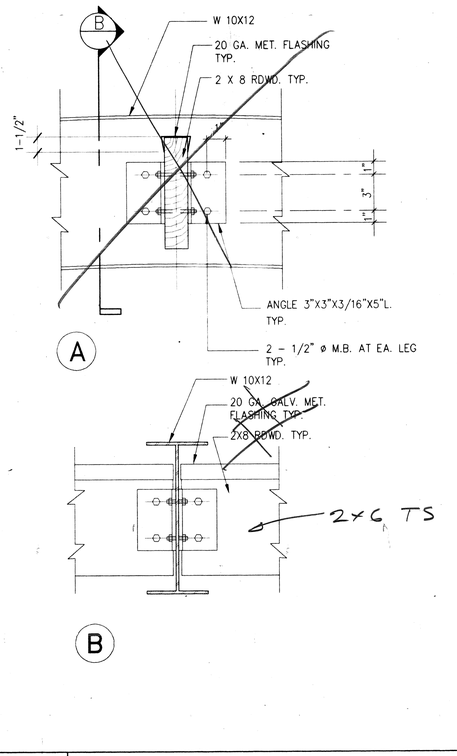

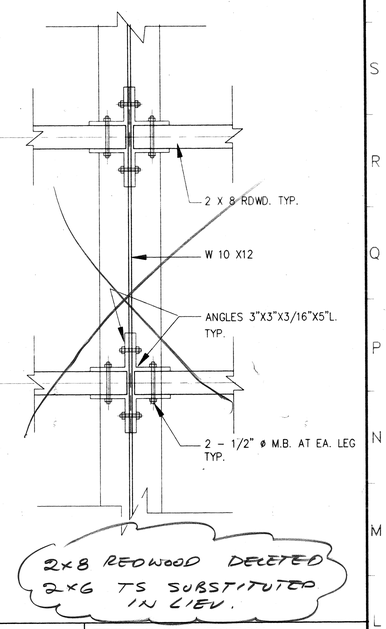

2x8 REDWOOD DELETED
2x6 TS SUBSTITUTED IN LIEU.

1L	TRELLIS PLAN	8L	COLUMN CONNECTION	12L	TRELLIS CONNECTION	16L	TRELLIS CONNECTION
1/4" = 1' – 0"	REF: A1.3	1-1/2" = 1' – 0"	REF: (1-3DETCOL)	3" = 1' – 0"	REF: A1.3 (1-3DET1B)(1-3DET2B)	1-1/2" = 1' – 0"	REF: (1-3DET3B)

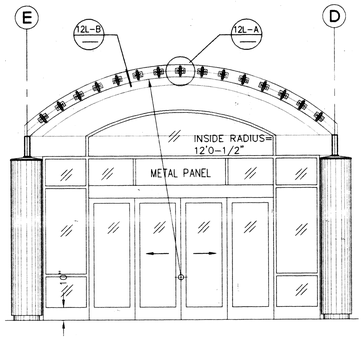

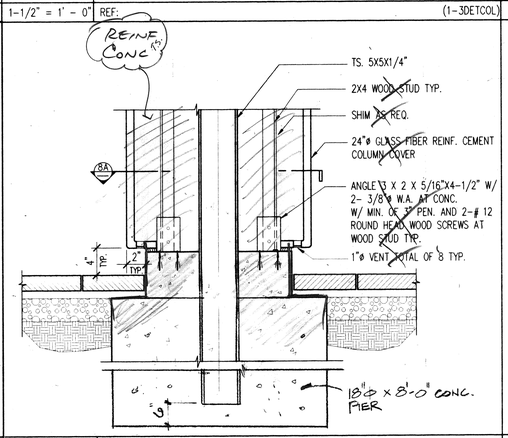

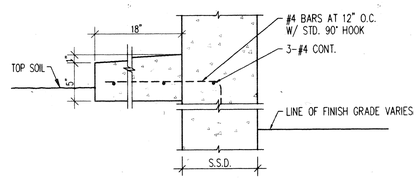

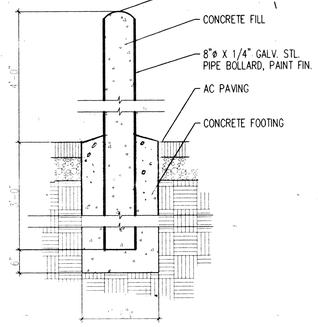

1F	TRELLIS SECTION	8F	COLUMN COVER DETAIL	12F	MOW STRIP	16F	BOLLARD
1/4" = 1'0"	REF: A1.3	1 1/2" = 1'-0"	(1-3NEW4)	1 1/2" = 1'-0"	(1-3DET12F)	3/4" = 1'-0"	(1-3DET16F)

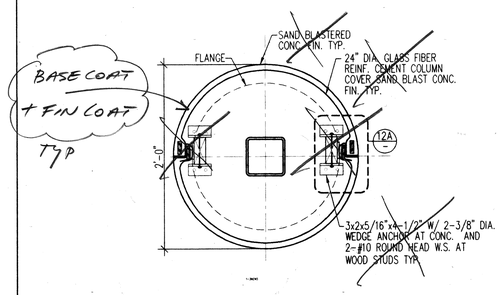

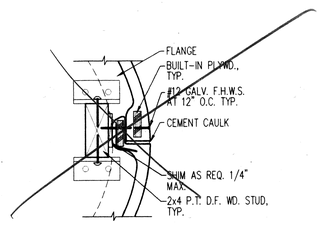

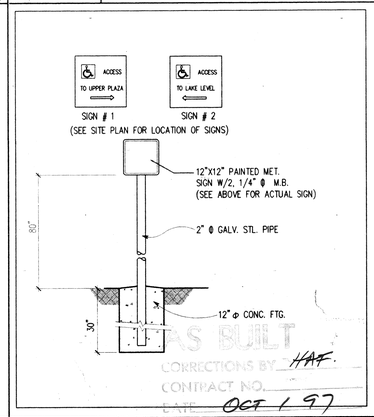

AS BUILT
CORRECTIONS BY: HAF.
CONTRACT NO.
DATE: OCT 1 97

8A	COLUMN DETAIL	12A	COLUMN DETAIL	16A	POLE MOUNTED ACCESS SIGN
1 1/2" = 1'-0"	REF: A1.3 (1-3NEW3)	3"= 1'0"	REF: A1.3 (1-3NEW5)	NOT TO SCALE	REF: (1-3NEW6)

REVISION	DATE	DESCRIPTION	INITIAL

ISSUE FOR PROGRESS REVIEW	09/18/95
ISSUE FOR PLAN CHECK	O.R.S.10/9/95
ISSUE FOR PERMIT	04/04/96
ISSUE FOR BID	4/2/96
ISSUE FOR CONSTRUCTION	

SEAL:

LICENSED ARCHITECT KARL D. CRAWFORD No. C-21230 EXPIRES 10-31-97 STATE OF CALIFORNIA

CONSULTANT:

INTERACTIVE RESOURCES
ARCHITECTURE • PLANNING • ENGINEERING
117 PARK PLACE
POINT RICHMOND
CALIFORNIA 94801
(510) 236-7335
(FAX) 232-5325

PROJECT:

STUDENT UNION

Diablo Valley College
321 Golf Club Road
Pleasant Hill, CA. 94523

Contra Costa Community College District

STAMP:

APPL 6 4 1 3 9
4-17-96

APPL. NUMBER:

KEY PLAN:

SHEET TITLE:

SITE DETAILS

SCALE	AS NOTED
PROJ. NO.	A94087.04

PREPARATION AND REVIEW		
PURPOSE	PERSONAL/INITIAL	DATE
DRAWN BY	IRI	09/18/95
PROJ. MGR.	GYN	09/18/95
PEER REVIEW	TKB	04/11/96

SHEET NUMBER:

A 1.3

NUMBER: OF:

L:\A94087.04\CAD\A1-3.DWG

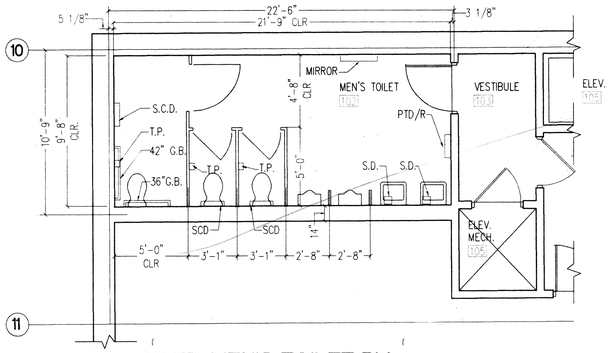

3 ENLARGED MEN'S TOILET RM.

1/4" = 1'-0"

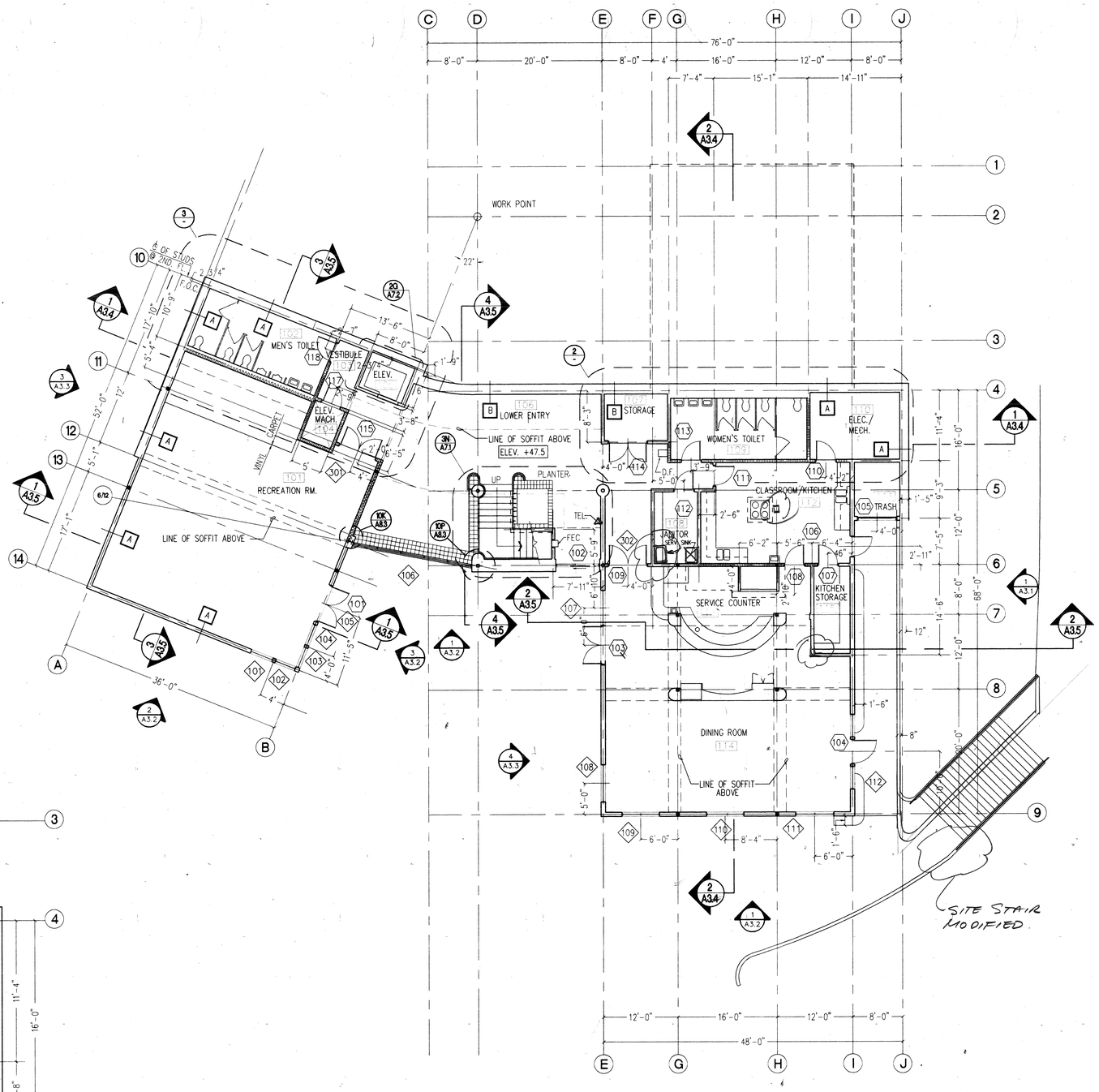

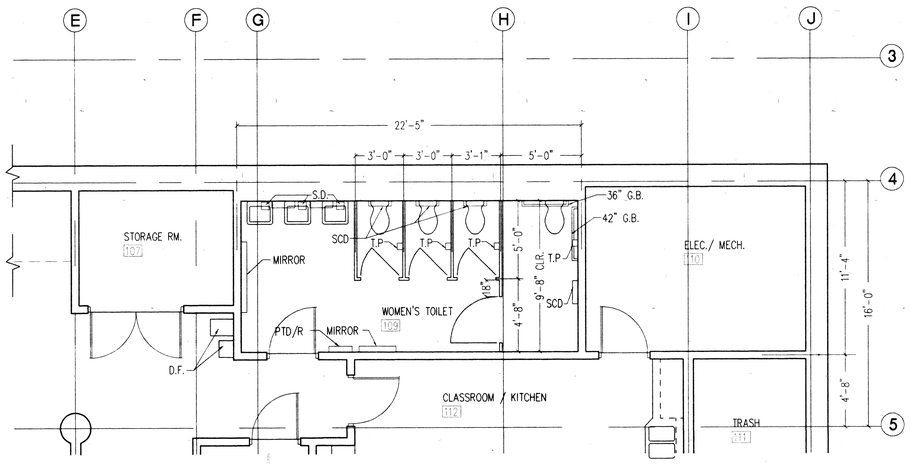

2 ENLARGED WOMEN'S TOILET RM.

1/4" = 1'-0"

ABBREVIATION KEY

G.B. – GRAB BAR
PTD./R/ – PAPER TOWEL DISPENSER\WASTE RECEPTACLE
Q.T. – QUARRY TILE
R.B. – RUBBER BASE
S.C.D. – SEAT COVER DISPENSER
S.D. – SOAP DISPENSER
TYP. – TYPICAL
M.BD. – MARKER BOARD
T.BD. – TACK BOARD
T.P.D. – TOILET PAPER DISPENSER
D.F. – DRINKING FOUNTAIN

WALL FURRING KEY

1. REFER TO STRUCTURAL DRAWINGS FOR INTERIOR PLYWOOD SHEAR WALL LOCATIONS.
2. REFER TO SPECIFICATIONS AND DETAILS FOR CERAMIC AND QUARRY TILE BACKING REQUIREMENTS.

A – FURRING – 2 X 4 INSTALLED FLAT @ 16" O.C. VERTICAL OVER 1/2" P.W. SHIMS @ 16" O.C. HORIZ.

B – WOOD FURRING – 2 X 4 @ 16" O.C. STUD WALL

NOTE:
TYPICAL WALL DIM ARE ℄ OF STUD
– SHADED WALLS INDICATE SOUND INSULATED WALLS.
– SEE SHEET A9.2 FOR SERVICE COUNTER AND KITCHEN CASEWORK DETAILS.

1 FIRST FLOOR PLAN

1/8" = 1'-0"

AS BUILT
CORRECTIONS BY HAF
CONTRACT NO.
DATE Oct 1 97

REVISION	DATE	DESCRIPTION	INITIAL

ISSUE FOR PROGRESS REVIEW	09/18/95
ISSUE FOR PLAN CHECK	O.R.S.10/9/95
ISSUE FOR PERMIT	04/04/96
ISSUE FOR BID	4/4/96
ISSUE FOR CONSTRUCTION	

SEAL:

LICENSED ARCHITECT DANIEL O. CLAWITER No. C 13809 EXP. 10-31-97 STATE OF CALIFORNIA

CONSULTANT:

INTERACTIVE RESOURCES
ARCHITECTURE • PLANNING • ENGINEERING
117 PARK PLACE
POINT RICHMOND
CALIFORNIA 94801
(510) 236-7435
(FAX.) 232-5325

PROJECT:

STUDENT UNION

Diablo Valley College
321 Golf Club Road
Pleasant Hill, CA. 94523

Contra Costa Community College District

STAMP:

DIVISION OF THE STATE ARCHITECT
PAGE OF REQUIRED CHANGES
APPL 6 4 1 3 9
4-17-96

APPL. NUMBER:

KEY PLAN:

SHEET TITLE:

FIRST FLOOR PLAN

SCALE	AS NOTED
PROJ. NO.	A94087.04

PREPARATION AND REVIEW

PURPOSE	PERSONAL/INITIAL	DATE
DRAWN BY	IRI	09/18/95
PROJ. MGR.	GYN	09/18/95
PEER REVIEW	TKB	04/11/96

SHEET NUMBER:

A 2.1

NUMBER: OF:

L:\A94087\DATA\CAD\A2-1.DWG

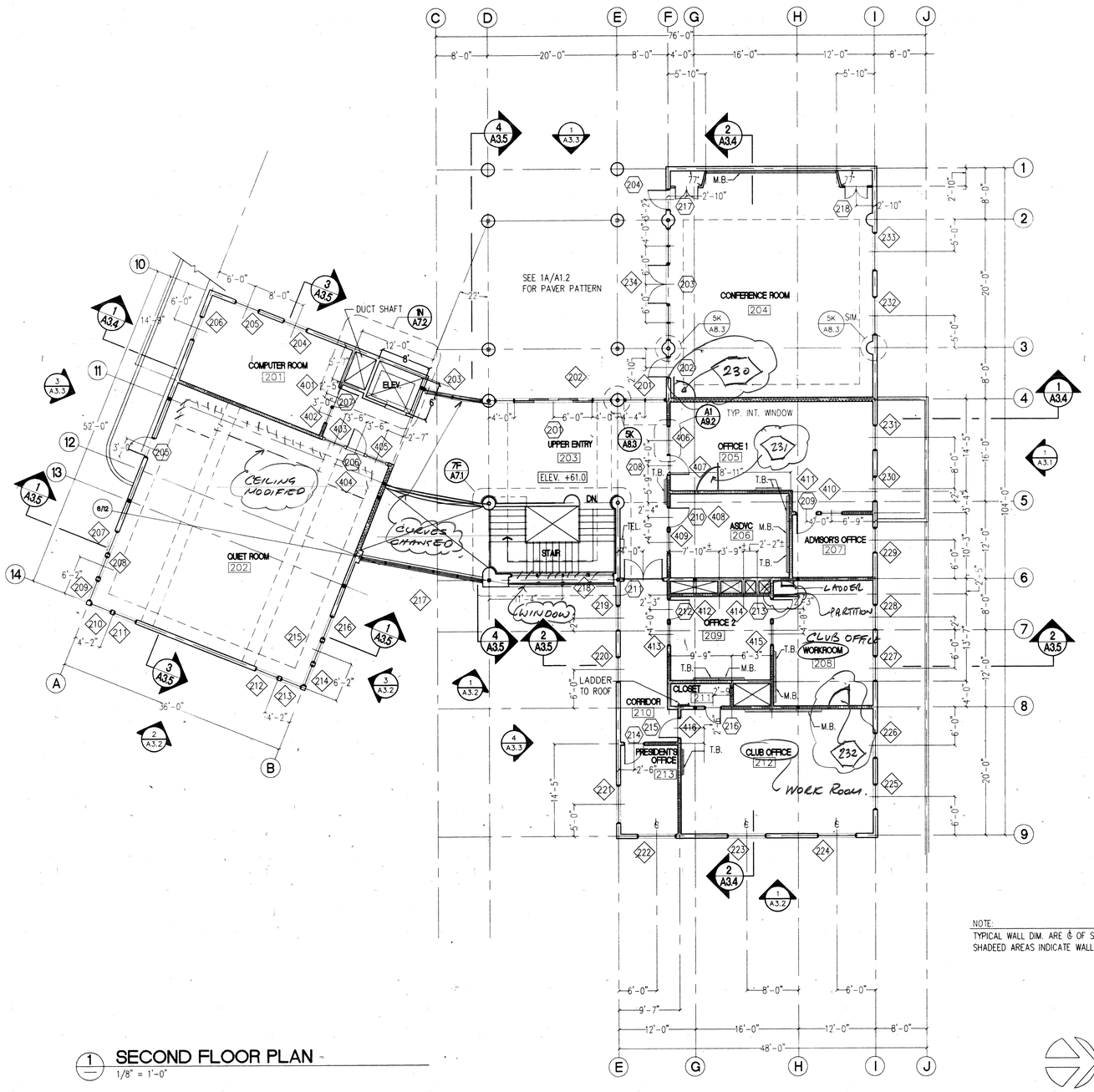

1 SECOND FLOOR PLAN
1/8" = 1'-0"

NOTE:
TYPICAL WALL DIM. ARE ℄ OF STUD
SHADEED AREAS INDICATE WALLS TO BE SOUND INSULATED

AS BUILT
CORRECTIONS BY: HAF
CONTRACT NO.
DATE: OCT 1. 97

REVISION	DATE	DESCRIPTION	INITIAL

ISSUE FOR PROGRESS REVIEW	09/18/95
ISSUE FOR PLAN CHECK	O.R.S.10/9/95
ISSUE FOR PERMIT	04/04/96
ISSUE FOR BID	4/4/96
ISSUE FOR CONSTRUCTION	

SEAL:

LICENSED ARCHITECT — DAVID C. CIANFICONI — No. C 15288 — REN. 10-31-97 — STATE OF CALIFORNIA

CONSULTANT:

INTERACTIVE RESOURCES
ARCHITECTURE • PLANNING • ENGINEERING
117 PARK PLACE
POINT RICHMOND
CALIFORNIA 94801
(510) 236-7435
(FAX) 232-5325

PROJECT:

STUDENT UNION

Diablo Valley College
321 Golf Club Road
Pleasant Hill, CA. 94523

Contra Costa Community College District

STAMP:

STATE OF CALIFORNIA — DEPARTMENT OF GENERAL SERVICES — APPROVED — APPL 6 41 3 9 — 4-17-96

APPL. NUMBER:

KEY PLAN:

SHEET TITLE:

SECOND FLOOR PLAN

SCALE	AS NOTED
PROJ. NO.	A94087.04

PREPARATION AND REVIEW

PURPOSE	PERSONAL/INITIAL	DATE
DRAWN BY	IRI	09/18/95
PROJ. MGR.	GYN	09/18/95
PEER REVIEW	TKB	04/11/96

SHEET NUMBER:

A 2.2

NUMBER: OF:

C:\MASTERS\CAD\A2-SUPP3

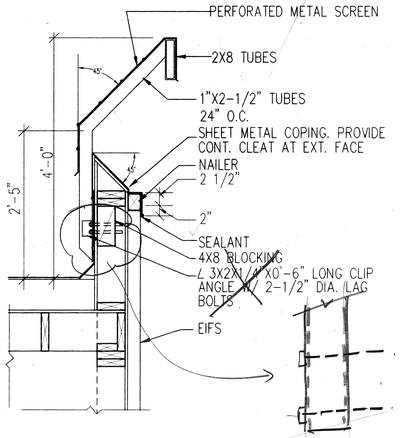

BOTT DETAIL MODIFIED.

1P	MECHANICAL SCREEN AND PARAPET
A2.3	SCALE: 3/4" = 1'-0"

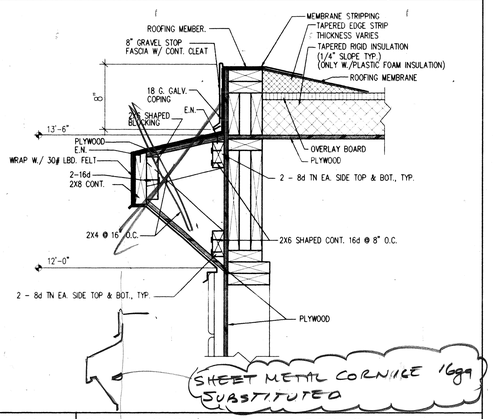

1J	GRAVEL STOP/FASCIA AND COPING
A2.3	SCALE = 1-1/2" = 1'-0"

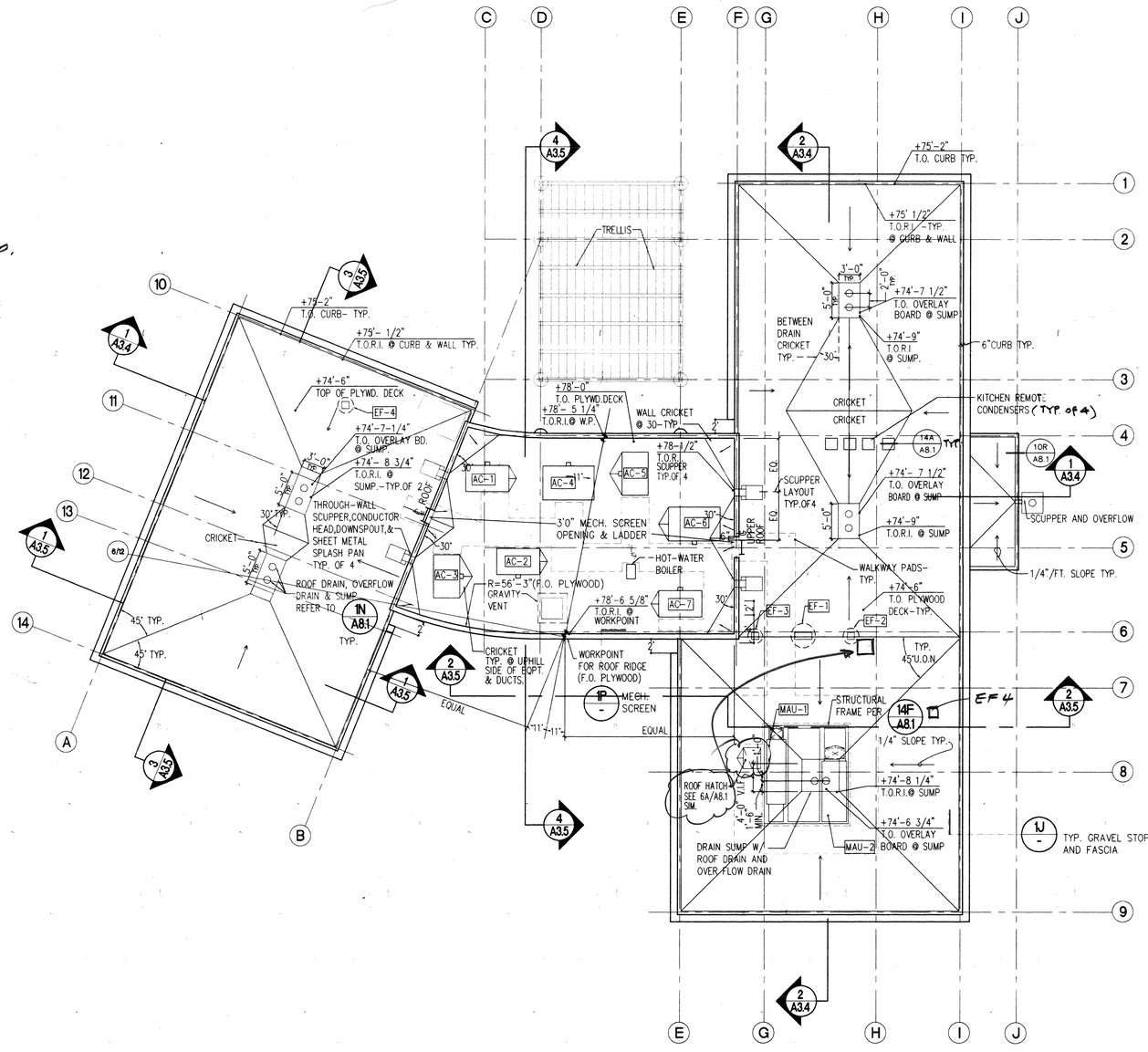

SHEET NOTES FOR ROOF PLAN

1. STRUCTURAL PLYWOOD ROOF DECK: ELEVATION AT TOP OF STRUCTURAL PLYWOOD ROOF DECK IS INDICATED AS "T.O. PLYWD. DECK".
2. ROOF INSULATION SYSTEM: THE ROOF INSULATION SYSTEM CONSISTS OF TAPERED RIGID INSULATION WITH OVERLAY BOARD. TOP OF ROOF INSULATION SYSTEM IS INDICATED AS "T.O.R.I.)
3. T.O.R.I. AT ROOF DRAIN SUMP: ELEVATION INDICATED ARE BASED ON 1/4" FOOT SLOPE STARTING AT CURB. ACTUAL ELEVATION VARY ± 1/2". ACTUAL DIMENSION SHALL BE VERIFIED AND INCLUDED IN SHOP DRAWINGS. ADJUST ELEVATION OF PLYWOOD FILER IN ROOF DRAIN SUMP TO ACCOMMODATE DISCREPANCY. THE ELEVATION AT THE TOP OF ROOF INSULATION SYSTEM AT THE SUMP IS INDICATED AS "T.O.R.I. @ SUMP"
4. ROOF DRAIN SUMP: THE BOTTOM OF THE ROOF DRAIN SUMP IS TYPICALLY LOCATED ABOVE THE TOP OF THE UNDERLYING STRUCTURAL PLYWOOD ROOF DECK. THE ELEVATION OF THE LOW POINT OF THE DRAIN SUMP IS INDICATED AS "T.O. OVERLAY BOARD @ SUMP". INTENT IS FOR "T.O. OVERLAY BOARD @ SUMP" TO BE 1-1/2 INCHES LOWER THAN T.O.R.I. AT SUMP.
5. CRICKETS: FORM CRICKETS FROM 1/2" FOOT TAPERED RIGID INSUL. PROVIDE CRICKETS AT THE UPHILL SIDE OF MECHANICAL EQPT.
6. ROOFTOP EQUIPMENT: ROOFTOP EQUIPMENT SHOWN SCHEMATICALLY. SEE MECHANICAL AND PLUMBING DRAWINGS FOR BALANCE OF DATA INCLUDING ADDITIONAL ITEMS. SEE ROOFTOP EQUIPMENT SCHEDULE FOR DETAIL REFERERENCE.
7. SHEET METAL DETAILS: PREPARE SHEET METAL SHOP DRAWINGS FOR THE FOLLOWING ITEMS BASED UPON SMACNA ARCHITECTURAL SHEET METAL MANUAL, 5TH. EDITION, AS INDICATED:
   A) THROUGH WALL SCUPPER (WITH GRAVEL STOP): FIGURE 1-26 SCUPPER SIZE: 6" HIGH X 12" WIDE.
   B) CONDUCTOR HEAD AND DOWN SPOUT: FIGURE 1-27A CONDUCTOR HEAD SIZE: FIGURE 1-25. DOWN SPOUT TYPE AND SIZE: PLAIN RECTANGLE,3"X4".
   C) SHEET METAL SPLASH BLOCK: FIGURE 1-36
8. WALKWAY PADS: LOCATION OF WALKWAY PADS AS SHOWN IS SCHEMATIC. ALLOW FOR 25% ADDITIONAL PADS TO BE PLACED ADJOINING MECHANICAL EQUIPMENT. TYPICAL WIDTH=3'-0". EXCEPTION: 4'-0"x6'-0" MINIMUM AT LANDINGS AT BOTH SIDES OF LADDERS.

ROOFTOP EQUIPMENT SCHEDULE

EQPT. ITEM	DETAIL NUMBER
AC-1	DETAIL 10A/A8.1
AC-2	DETAIL 10A/A8.1
AC-3	DETAIL 10A/A8.1
AC-4	DETAIL 1A/A8.1
AC-5	DETAIL 10A/A8.1
AC-6	DETAIL 1A/A8.1
AC-7	DETAIL 1A/A8.1
EF-1	DETAIL 6A/A8.1
EF-2	DETAIL 6A/A8.1
EF-3	DETAIL 14A/A8.1
EF-4	DETAIL 14A/A8.1
GRAVITY VENT	SEE MECHANICAL DRAWINGS
HOT WATER BOILER	SEE 6G/A8.1
MAU-1 & MAU-2	DUCT THROUGH ROOF: DETAIL 10L/A8.1 STRUCTURAL FRAME: DETAIL 14F/A8.1
MISCELLANEOUS PENETRATIONS	VENT PIPES: DETAIL 14L/A8.1 PIPES, AND CONDUITS: DETAIL 1G/A8.1 SPACING: DETAIL 14R/A8.1
ROOF DRAINS, OVERFLOW DRAINS, AND SUMPS	DETAIL 1N/A8.1

1 ROOF PLAN

SCALE: 1/8" = 1'-0"

AS BUILT
CORRECTIONS BY HAF
CONTRACT NO.
DATE OCT 1 97

REVISION	DATE	DESCRIPTION	INITIAL

ISSUE FOR PROGRESS REVIEW	09/18/95
ISSUE FOR PLAN CHECK	O.R.S.10/9/95
ISSUE FOR PERMIT	04/04/96
ISSUE FOR BID	4/8/96
ISSUE FOR CONSTRUCTION	

SEAL:

LICENSED ARCHITECT JAMES D. CRAWFORD No. C-19837 EXP. 10-31-97 STATE OF CALIFORNIA 4/3/96

CONSULTANT:

INTERACTIVE RESOURCES
ARCHITECTURE • PLANNING • ENGINEERING
117 PARK PLACE
POINT RICHMOND
CALIFORNIA 94801
(510) 236-7435
(FAX) 232-5325

PROJECT:

STUDENT UNION

Diablo Valley College
321 Golf Club Road
Pleasant Hill, CA. 94523

Contra Costa Community College District

STAMP:

APPROVED APPL 6 A1 39 LS SS GR 4-17-96

APPL. NUMBER:

KEY PLAN:

SHEET TITLE:

ROOF PLAN

SCALE	AS NOTED
PROJ. NO.	A94087.04

PREPARATION AND REVIEW		
PURPOSE	PERSONAL/INITIAL	DATE
DRAWN BY	IRI	09/18/95
PROJ. MGR.	GYN	09/18/95
PEER REVIEW	TKB	04/11/96

SHEET NUMBER:

A 2.3

NUMBER: OF:

LV:\1\94087.04\CAD\A2-2.DWG

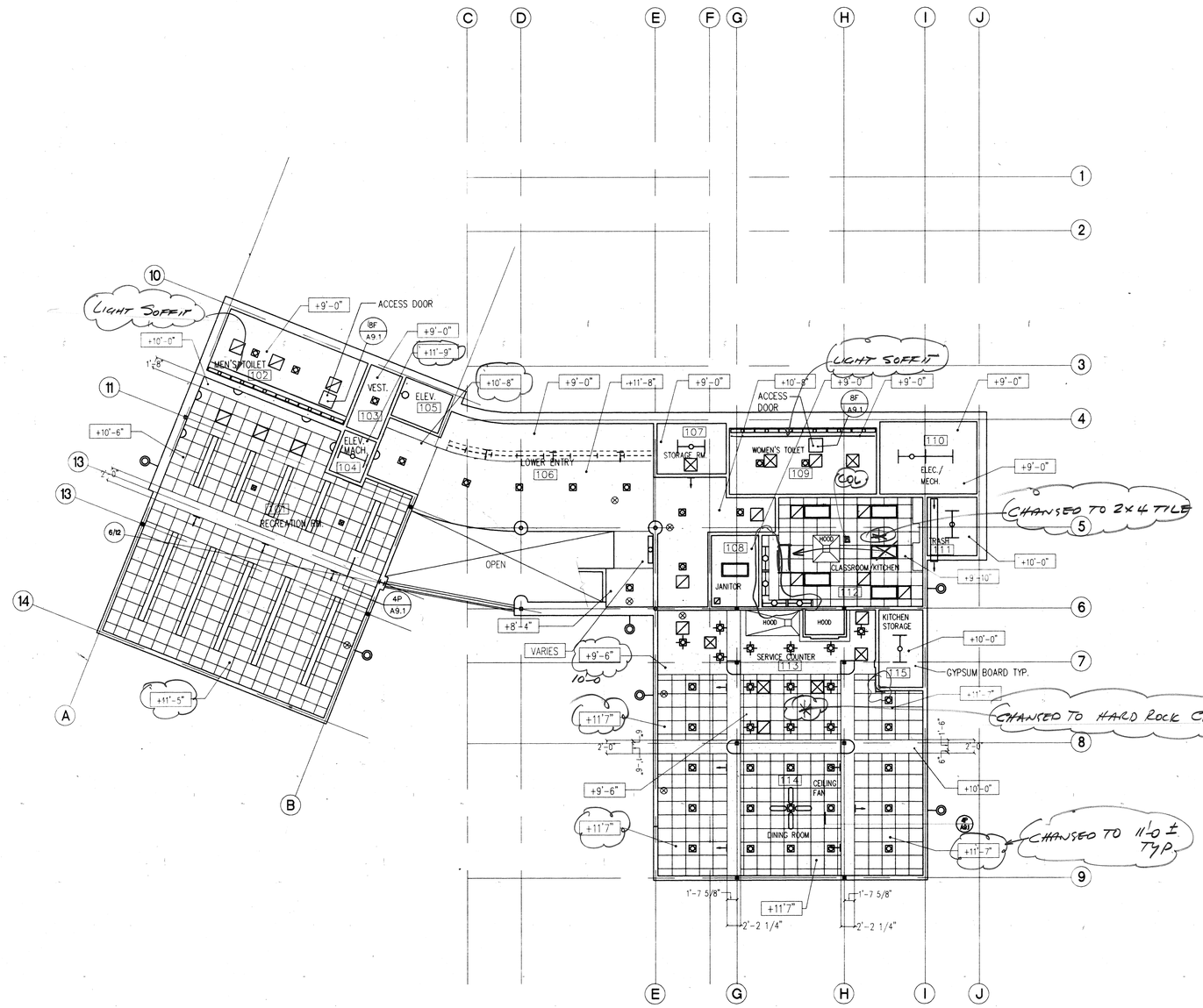

1 FIRST FLOOR REFLECTED CEILING PLAN
1/8" = 1'-0"

SHEET NOTES

1. REFER TO SHEET A9.1 FOR TYPICAL CEILING NOTES AND DETAILS.
2. INSTALL 6 1/4" BATT / BLANKET INSULATION ABOVE ALL SUSPENDED GYPSUM BOARD AND ACCOUSTICAL TILE CEILINGS.

LEGEND

- +9'-0" CEILING HEIGHT FROM FLOOR
- RECESSED FLUORESCENT
- SURFACE MOUNTED LIGHT FIXTURE
- UNDERCADINET FIXTURE
- WRAP AROUND FLUORESCENT
- WALL SCONCE
- SURFACE MOUNTED DOWNLIGHT
- RECESSED DOWNLIGHT
- EXTERIOR WALL MOUNTED AREA LIGHT
- EXIT LIGHT
- STAGGERED STRIP LIGHT
- PENDANT MOUNTED FIXTURE
- CEILING FAN / LIGHT
- INCANDESCENT TRACK LIGHTING
- SEMI RECESSED FIXTURE
- SUPPLY DIFFUSER
- RETURN REGISTER
- EXHAUST REGISTER
- SIDEWALL SUPPLY REGISTER
- SIDEWALL RETURN REGISTER

NOTE
REFER TO MECHANICAL AND ELECTRICAL DRAWINGS FOR COMPLETE INFORMATION

AS BUILT
CORRECTIONS BY: HAF
CONTRACT NO.
DATE: OCT. 1 97

REVISION	DATE	DESCRIPTION	INITIAL

ISSUE FOR PROGRESS REVIEW	09/18/95
ISSUE FOR PLAN CHECK	O.R.S.10/9/95
ISSUE FOR PERMIT	04/04/96
ISSUE FOR BID	4/4/96
ISSUE FOR CONSTRUCTION	

SEAL:

LICENSED ARCHITECT
ARN. B. CIANCHI
No. C 5319
REN. 10-31-97
STATE OF CALIFORNIA

CONSULTANT:

INTERACTIVE RESOURCES
ARCHITECTURE • PLANNING • ENGINEERING
117 PARK PLACE
POINT RICHMOND
CALIFORNIA 94801
(510) 236-7435
(FAX.) 232-5325

PROJECT:

STUDENT UNION

Diablo Valley College
321 Golf Club Road
Pleasant Hill, CA. 94523

Contra Costa Community College District

STAMP:

APPL. S 4139
4-17-96

APPL. NUMBER:

KEY PLAN:

SHEET TITLE:

FIRST FLOOR REFLECTED CEILING PLAN

SCALE	AS NOTED
PROJ. NO.	A94087.04

PREPARATION AND REVIEW

PURPOSE	PERSONAL/INITIAL	DATE
DRAWN BY	IRI	09/18/95
PROJ. MGR.	GYN	09/18/95
PEER REVIEW	TKB	04/11/96

SHEET NUMBER:

A
2.4

NUMBER: OF:

12

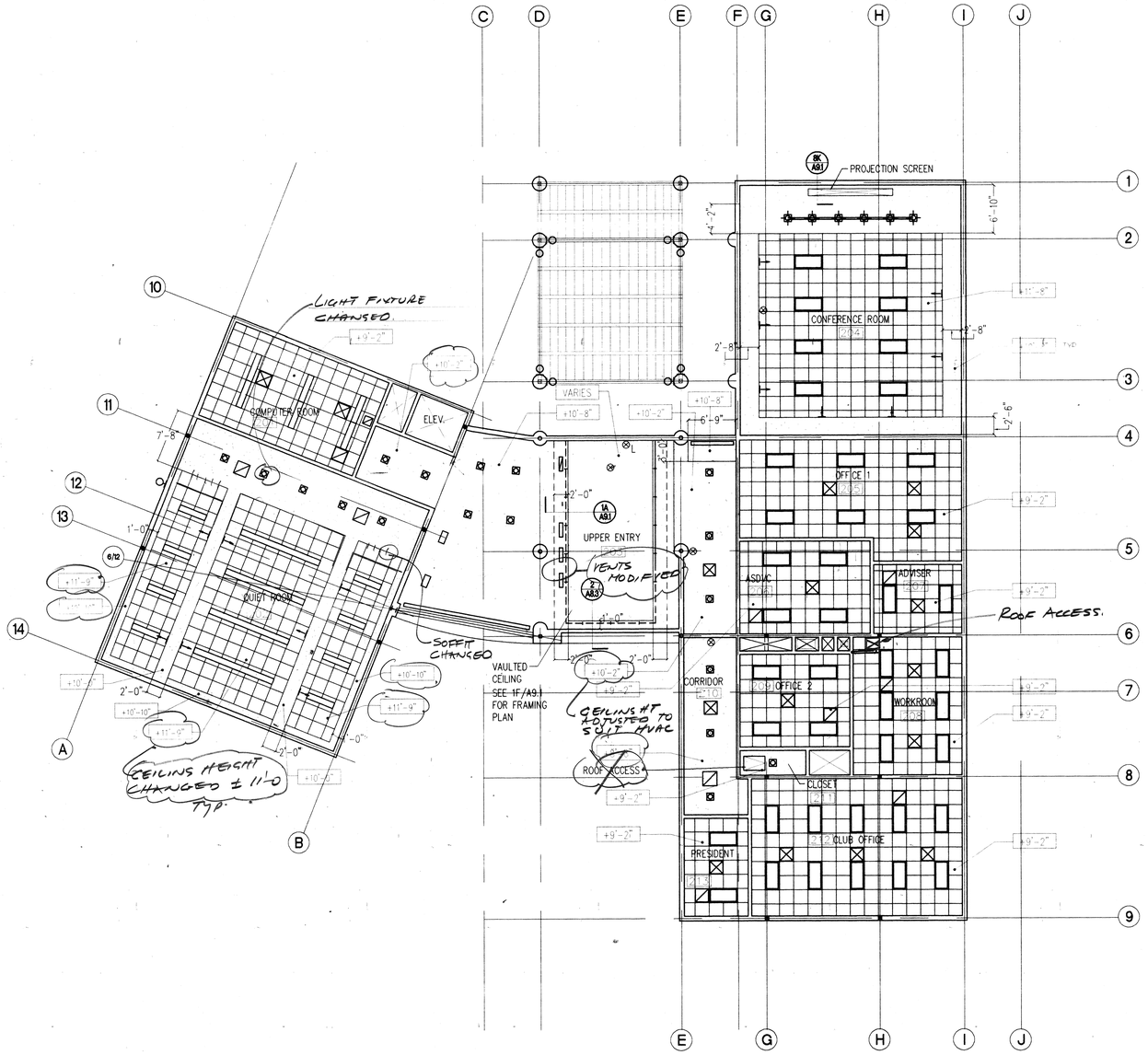

1 SECOND FLOOR REFLECTED CEILING PLAN
1/8" = 1'-0"

SHEET NOTES

1. REFER TO SHEET A9.1 FOR TYPICAL CEILING NOTES AND DETAILS.
2. INSTALL 6 1/4" BATT / BLANKET INSULATION ABOVE ALL SUSPENDED GYPSUM BOARD AND ACCOUSTICAL TILE CEILINGS.

LEGEND

- +9'-0" CEILING HEIGHT FROM FLOOR
- RECESSED FLUORESCENT
- SURFACE MOUNTED LIGHT FIXTURE
- UNDERCADINET FIXTURE
- WRAP AROUND FLUORESCENT
- WALL SCONCE
- SURFACE MOUNTED DOWNLIGHT
- RECESSED DOWNLIGHT
- EXTERIOR WALL MOUNTED AREA LIGHT
- EXIT LIGHT
- STAGGERED STRIP LIGHT
- PENDANT MOUNTED FIXTURE
- CEILING FAN / LIGHT
- INCANDESCENT TRACK LIGHTING
- SEMI RECESSED FIXTURE
- SUPPLY DIFFUSER
- RETURN REGISTER
- EXHAUST REGISTER
- SIDEWALL SUPPLY REGISTER
- SIDEWALL RETURN REGISTER

NOTE
REFER TO MECHANICAL AND ELECTRICAL DRAWINGS FOR COMPLETE INFORMATION

AS BUILT
CORRECTIONS BY HAF
CONTRACT NO.
DATE OCT 1 97

REVISION	DATE	DESCRIPTION	INITIAL

ISSUE FOR PROGRESS REVIEW	09/18/95
ISSUE FOR PLAN CHECK	O.R.S.10/9/95
ISSUE FOR PERMIT	04/04/96
ISSUE FOR BID	4/4/96
ISSUE FOR CONSTRUCTION	

SEAL:

LICENSED ARCHITECT PAUL D. CIANFICHI C 5910 REN. 10-31-97 STATE OF CALIFORNIA

CONSULTANT:

INTERACTIVE RESOURCES
ARCHITECTURE • PLANNING • ENGINEERING
117 PARK PLACE
POINT RICHMOND
CALIFORNIA 94801
(510) 236-7435
(FAX.) 232-5325

PROJECT:
STUDENT UNION

Diablo Valley College
321 Golf Club Road
Pleasant Hill, CA. 94523

Contra Costa Community College District

STAMP:

APPL 94139
LS GR
4-17-96

APPL. NUMBER:

KEY PLAN:

SHEET TITLE:
SECOND FLOOR REFLECTED CEILING PLAN

SCALE	AS NOTED
PROJ. NO.	A94087.04

PREPARATION AND REVIEW

PURPOSE	PERSONAL/INITIAL	DATE
DRAWN BY	IRI	09/18/95
PROJ. MGR.	GYN	09/18/95
PEER REVIEW	TKB	04/11/96

SHEET NUMBER:
A 2.5
NUMBER: OF:

L:\A\94087\04\CAD\A2-6.DWG

13

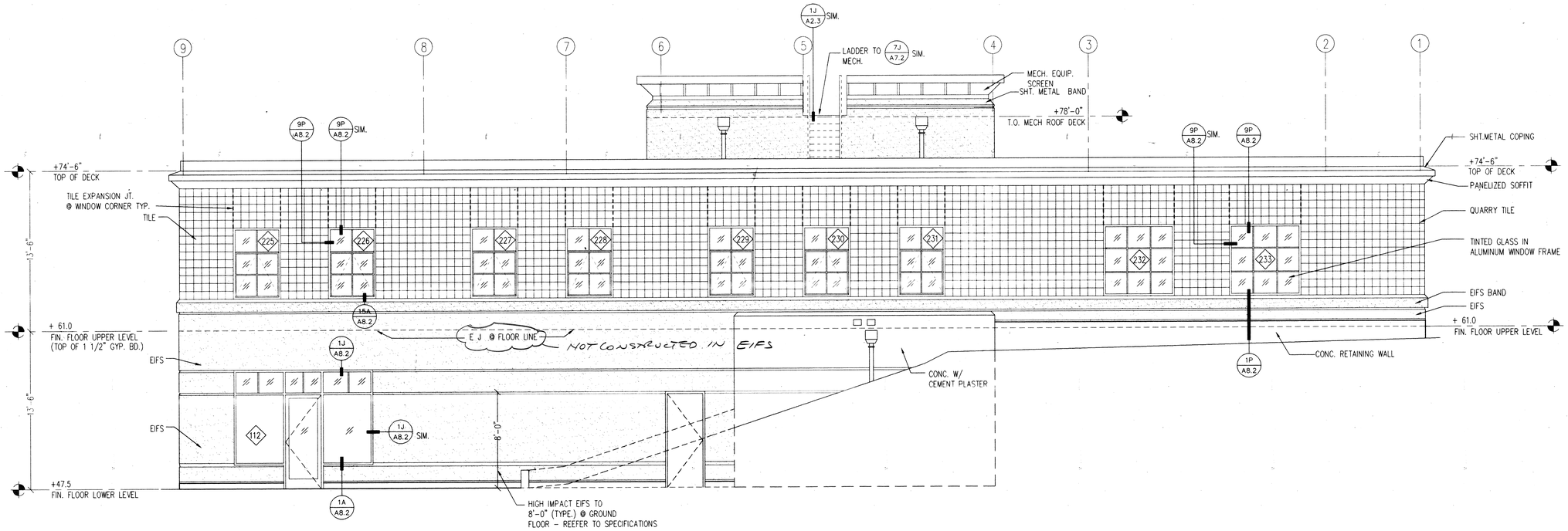

1 NORTH ELEVATION
1/4" = 1'-0"

AS BUILT
CORRECTIONS BY HAF
CONTRACT NO.
DATE OCT 1 97

REVISION	DATE	DESCRIPTION	INITIAL

ISSUE FOR PROGRESS REVIEW	09/18/95
ISSUE FOR PLAN CHECK	O.R.S.10/9/95
ISSUE FOR PERMIT	04/04/96
ISSUE FOR BID	4/4/96
ISSUE FOR CONSTRUCTION	

SEAL:

LICENSED ARCHITECT PAUL D. CIANCHI No. C 5310 REN. 10-31-97 STATE OF CALIFORNIA

CONSULTANT:

INTERACTIVE RESOURCES
ARCHITECTURE • PLANNING • ENGINEERING
117 PARK PLACE
POINT RICHMOND
CALIFORNIA 94801
(510) 236-7435
(FAX.) 232-5325

PROJECT:

STUDENT UNION

Diablo Valley College
321 Golf Club Road
Pleasant Hill, CA. 94523

Contra Costa Community College District

STAMP:

APPL 6 4 1 3 9
LS GR
4-17-96

APPL. NUMBER:

KEY PLAN:

SHEET TITLE:

NORTH ELEVATION

SCALE	AS NOTED
PROJ. NO.	A94087.04

PREPARATION AND REVIEW

PURPOSE	PERSONAL/INITIAL	DATE
DRAWN BY	IRI	09/18/95
PROJ. MGR.	GYN	09/18/95
PEER REVIEW	TKB	04/11/96

SHEET NUMBER:

A
3.1

NUMBER: OF:

L:\A\94087.04\CAD\A3-3.DWG

14

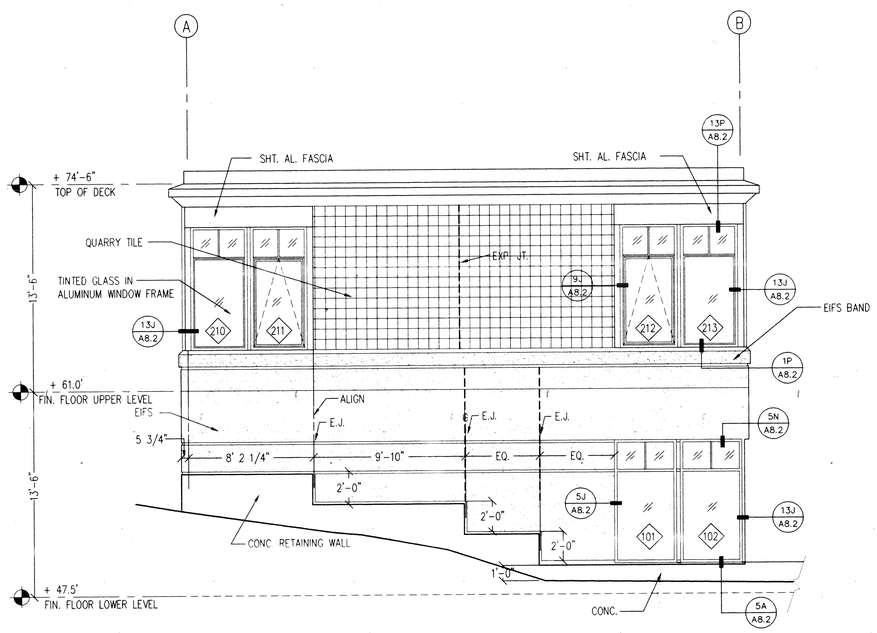

2 EAST ELEVATION OBLIQUE SIDE ONE
1/4" = 1'-0"

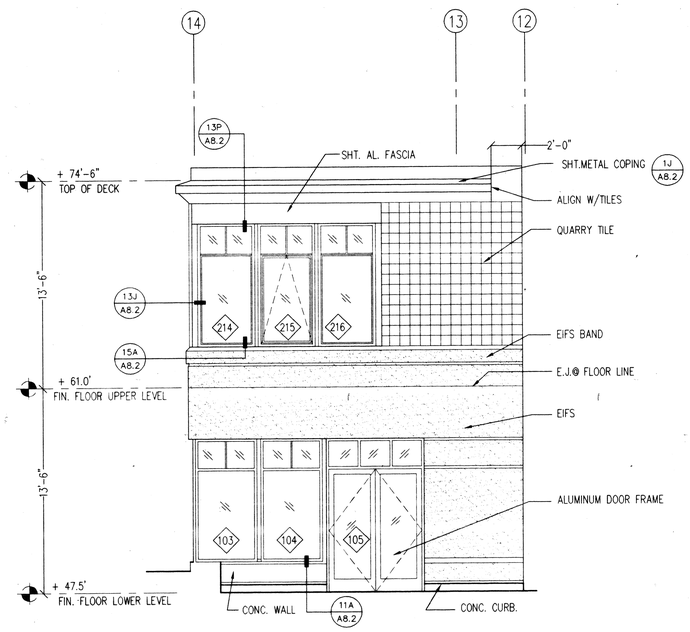

3 NORTH ELEVATION OBLIQUE SIDE TWO
1/4" = 1'-0"

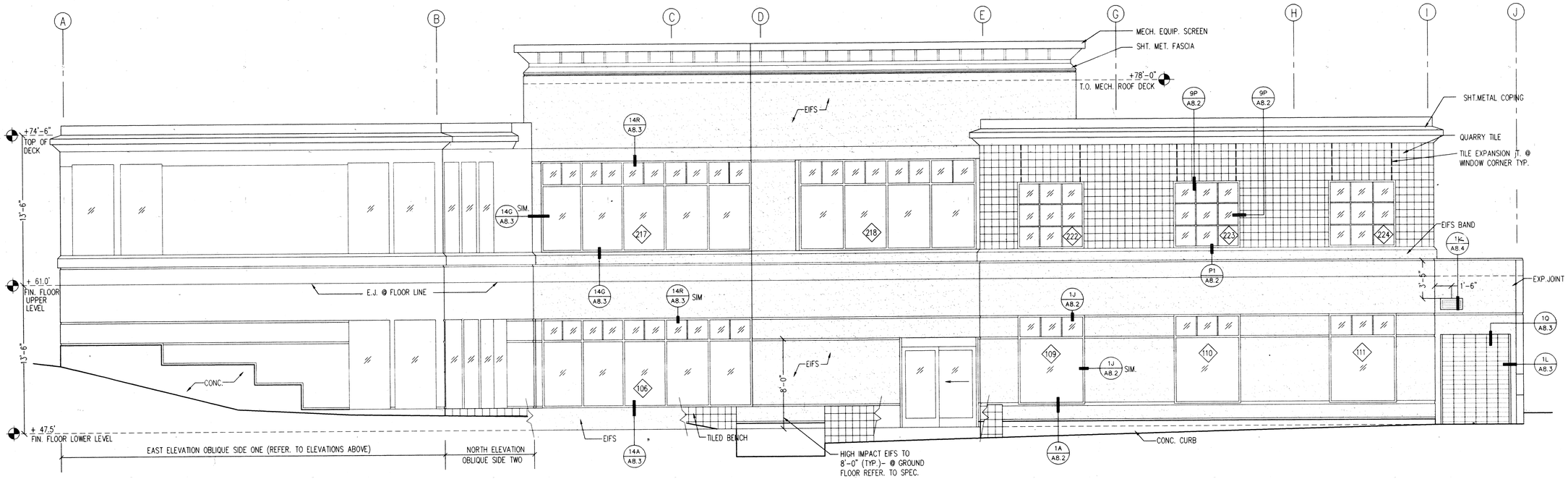

1 EAST ELEVATION
1/4" = 1'-0"

AS BUILT
CORRECTED BY HAF
CONTRACT NO.
DATE OCT 1 97

REVISION	DATE	DESCRIPTION	INITIAL
ISSUE FOR PROGRESS REVIEW	09/18/95		
ISSUE FOR PLAN CHECK	O.R.S.10/9/95		
ISSUE FOR PERMIT	04/04/96		
ISSUE FOR BID	4/4/96		
ISSUE FOR CONSTRUCTION			

SEAL:

LICENSED ARCHITECT PAUL D. CIANCHETTA No. C 19554 REN. 10-31-97 STATE OF CALIFORNIA

CONSULTANT:

INTERACTIVE RESOURCES
ARCHITECTURE • PLANNING • ENGINEERING
117 PARK PLACE
POINT RICHMOND
CALIFORNIA 94801
(510) 236-7435
(FAX.) 232-5325

PROJECT:

STUDENT UNION

Diablo Valley College
321 Golf Club Road
Pleasant Hill, CA. 94523

Contra Costa Community College District

STAMP:

APPROVED DIVISION OF THE STATE ARCHITECT APPL 6 A 1 3 9 4-17-96

APPL. NUMBER:

KEY PLAN:

SHEET TITLE:

BUILDING ELEVATIONS

SCALE	AS NOTED
PROJ. NO.	A94087.04

PREPARATION AND REVIEW		
PURPOSE	PERSONAL/INITIAL	DATE
DRAWN BY	IRI	09/18/95
PROJ. MGR.	GYN	09/18/95
PEER REVIEW	TKB	04/11/96

SHEET NUMBER:

A 3.2

NUMBER: OF:

LAYNAME:A3.2.DGN;3.2NG

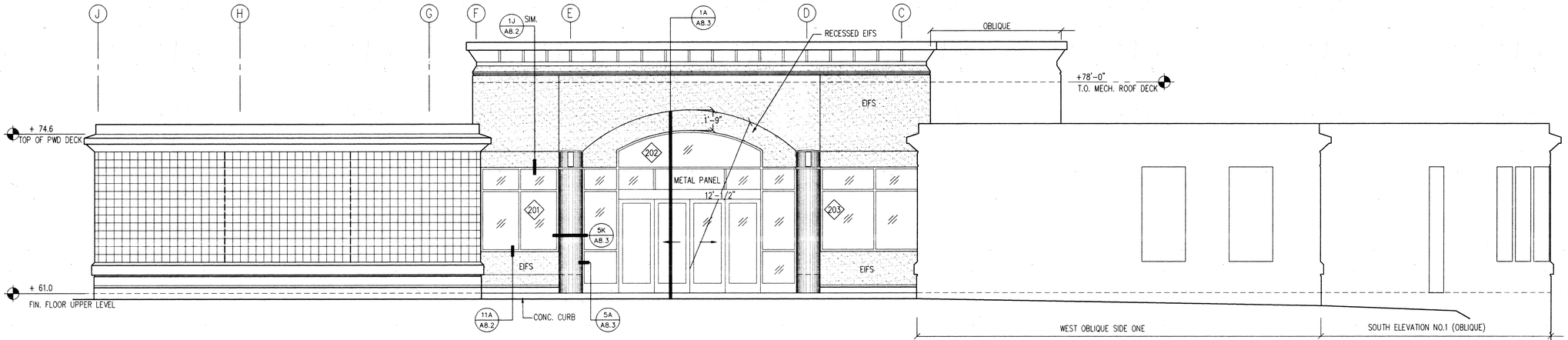

1 WEST ELEVATION
1/4" = 1'-0"

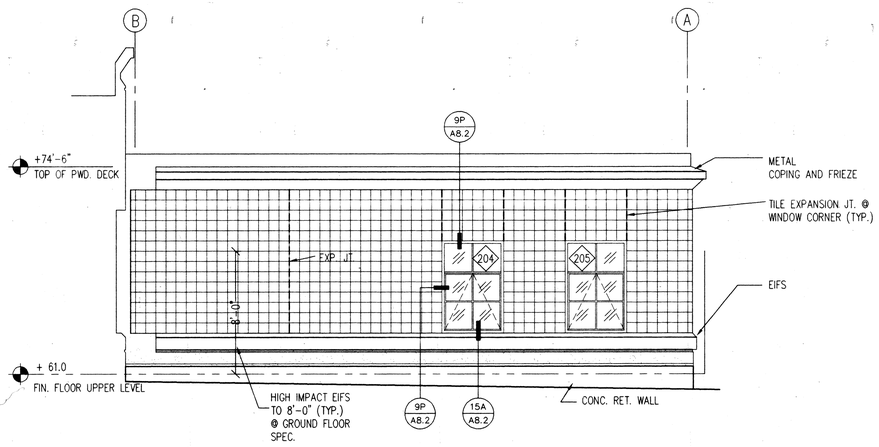

2 WEST ELEVATION OBLIQUE SIDE ONE
1/4" = 1'-0"

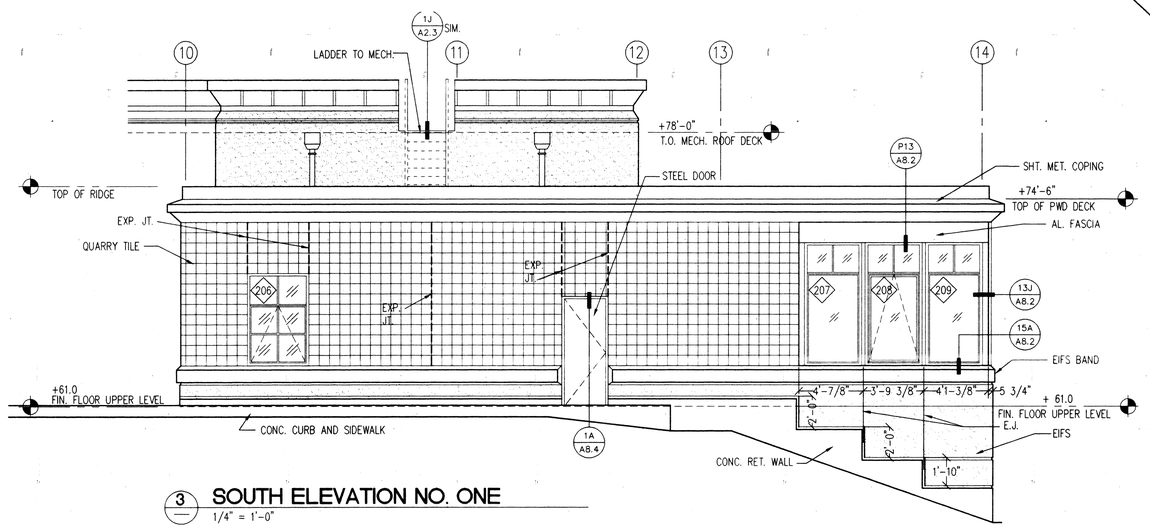

3 SOUTH ELEVATION NO. ONE
1/4" = 1'-0"

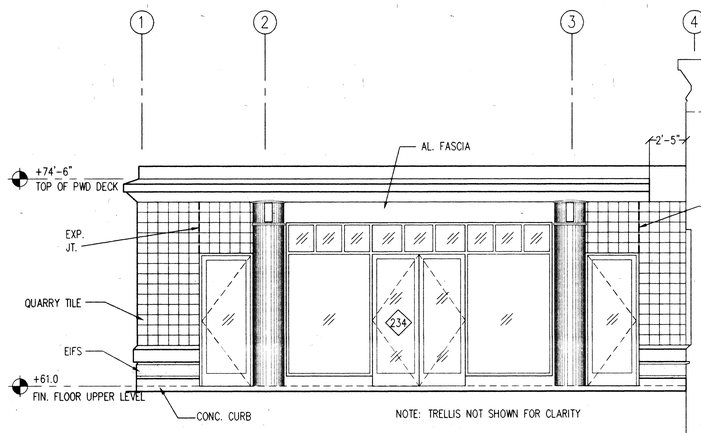

4 SOUTH ELEVATION NO. TWO
1/4" = 1'-0"

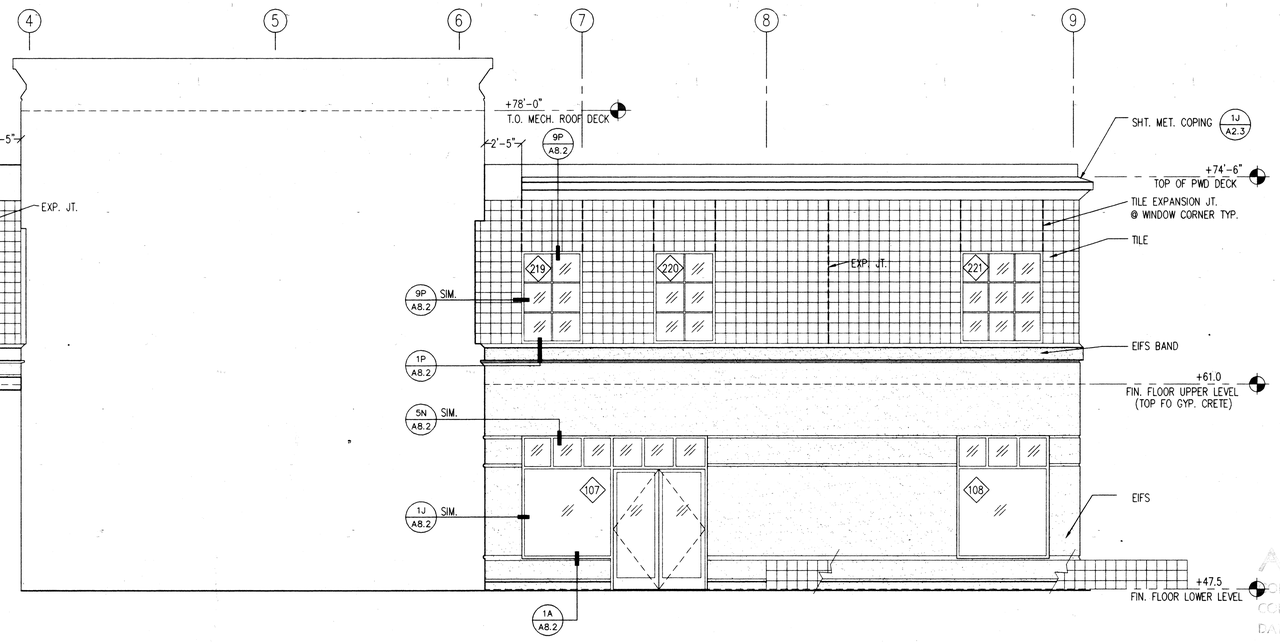

AS BUILT
CORRECTIONS BY HAF
CONTRACT NO.
DATE OCT 1 97

REVISION	DATE	DESCRIPTION	INITIAL

ISSUE FOR PROGRESS REVIEW	09/18/95
ISSUE FOR PLAN CHECK	O.R.S.10/9/95
ISSUE FOR PERMIT	04/04/96
ISSUE FOR BID	4/4/96
ISSUE FOR CONSTRUCTION	

SEAL:

LICENSED ARCHITECT
STATE OF CALIFORNIA
REN. 10-31-97

CONSULTANT:

INTERACTIVE
RESOURCES
ARCHITECTURE • PLANNING • ENGINEERING
117 PARK PLACE
POINT RICHMOND
CALIFORNIA 94801
(510) 236-7435
(FAX.) 232-5325

PROJECT:

STUDENT UNION

Diablo Valley College
321 Golf Club Road
Pleasant Hill, CA. 94523

Contra Costa
Community College District

STAMP:

APPL. NUMBER:

KEY PLAN:

SHEET TITLE:

BUILDING ELEVATION

SCALE	AS NOTED
PROJ. NO.	A94087.04

PREPARATION AND REVIEW

PURPOSE	PERSONAL/INITIAL	DATE
DRAWN BY	IRI	09/18/95
PROJ. MGR.	GYN	09/18/95
PEER REVIEW	TKB	04/11/96

SHEET NUMBER:

A
3.3

NUMBER: OF:

L:\A\94087.04\CAD\A3-2.DWG

16

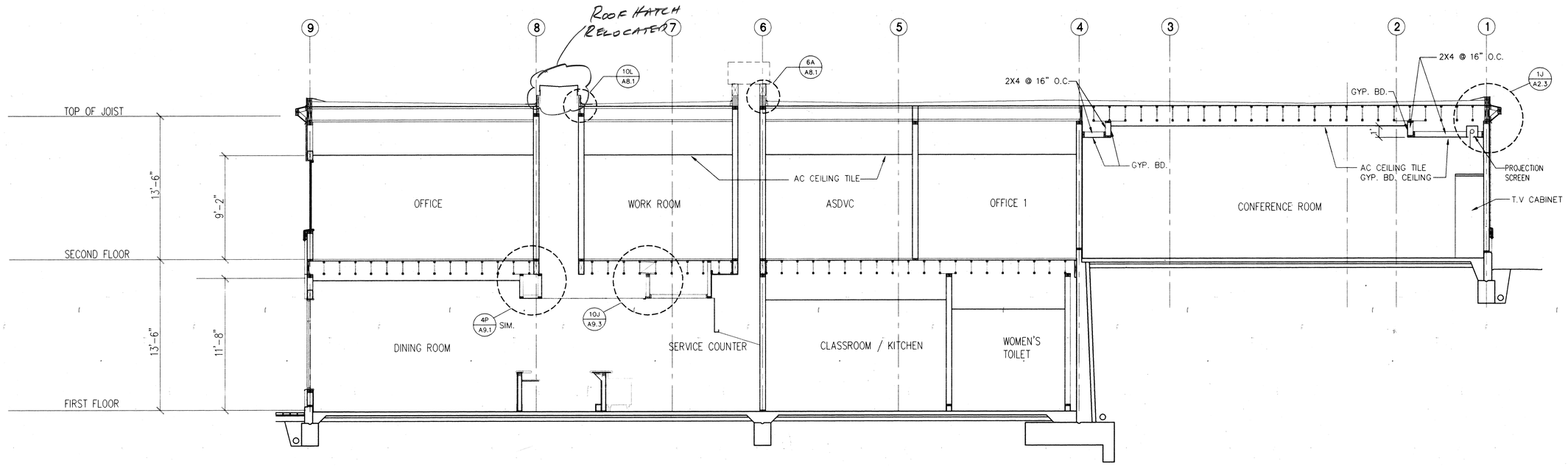

2 BUILDING SECTION
1/4" = 1'-0"

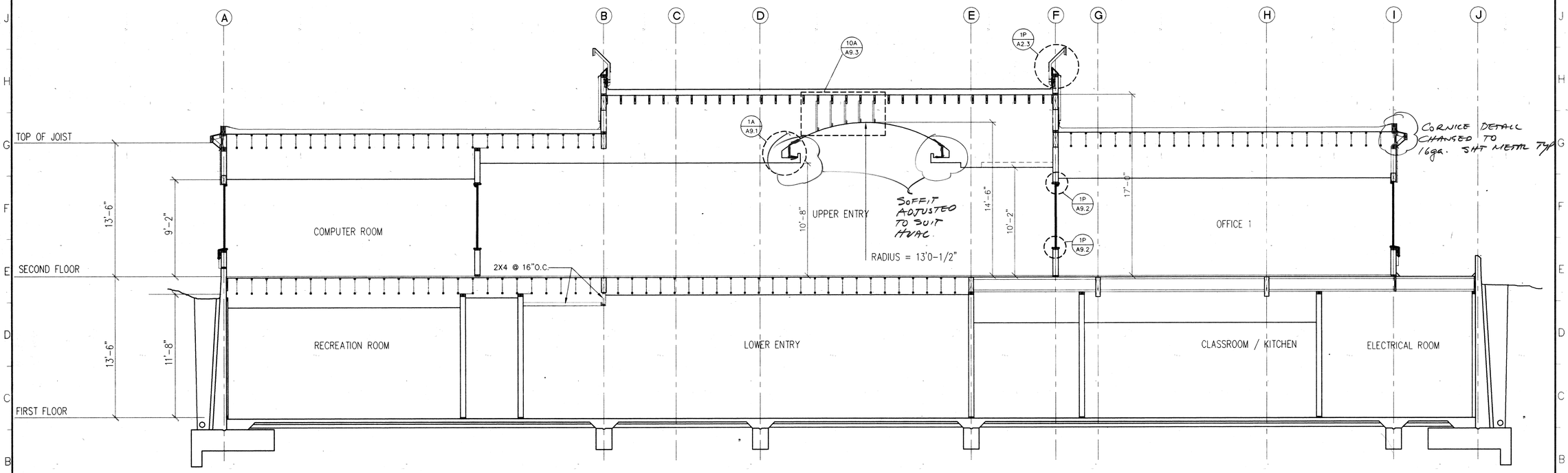

1 BUIDLING SECTION
1/4" = 1'-0"

AS BUILT
CORRECTIONS HAF.
CONTRACT NO.
DATE OCT 1 97.

REVISION	DATE	DESCRIPTION	INITIAL

ISSUE FOR PROGRESS REVIEW	09/18/95
ISSUE FOR PLAN CHECK	O.R.S.10/9/95
ISSUE FOR PERMIT	04/04/96
ISSUE FOR BID	4/8/96
ISSUE FOR CONSTRUCTION	

SEAL:

LICENSED ARCHITECT PAUL G. GRAY No. C 15300 REN. 10-31-97 STATE OF CALIFORNIA

CONSULTANT:

INTERACTIVE RESOURCES
ARCHITECTURE • PLANNING • ENGINEERING
117 PARK PLACE
POINT RICHMOND
CALIFORNIA 94801
(510) 236-7435
(FAX.) 232-5325

PROJECT:

STUDENT UNION

Diablo Valley College
321 Golf Club Road
Pleasant Hill, CA. 94523

Contra Costa Community College District

STAMP:

STATE OF CALIFORNIA DEPT. OF INDUSTRIAL RELATIONS DIVISION OF LABOR LAW ENFORCEMENT APPROVED APR 5 A 11 '96 4-17-96

APPL. NUMBER:

KEY PLAN:

SHEET TITLE:

BUILDING SECTIONS

SCALE	AS NOTED
PROJ. NO.	A94087.04

PREPARATION AND REVIEW		
PURPOSE	PERSONAL/INITIAL	DATE
DRAWN BY	IRI	09/18/95
PROJ. MGR.	GYN	09/18/95
PEER REVIEW	TKB	04/11/96

SHEET NUMBER:

A 3.4

NUMBER: OF:

L:\A94087A\CAD\A3-3.DWG

17

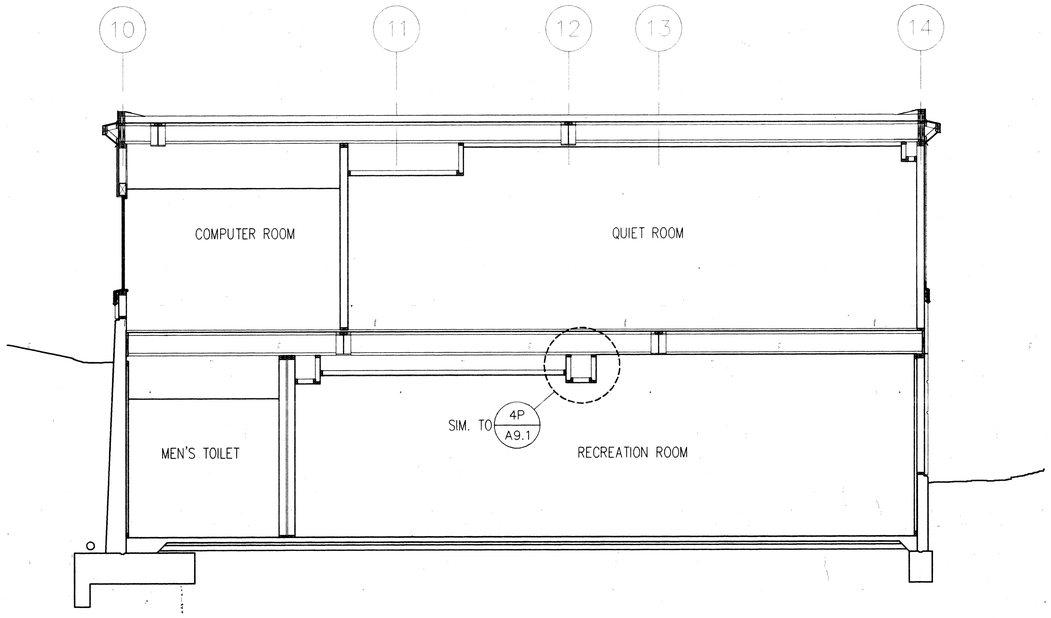

3 BUILDING SECTION
1/4" = 1'-0"

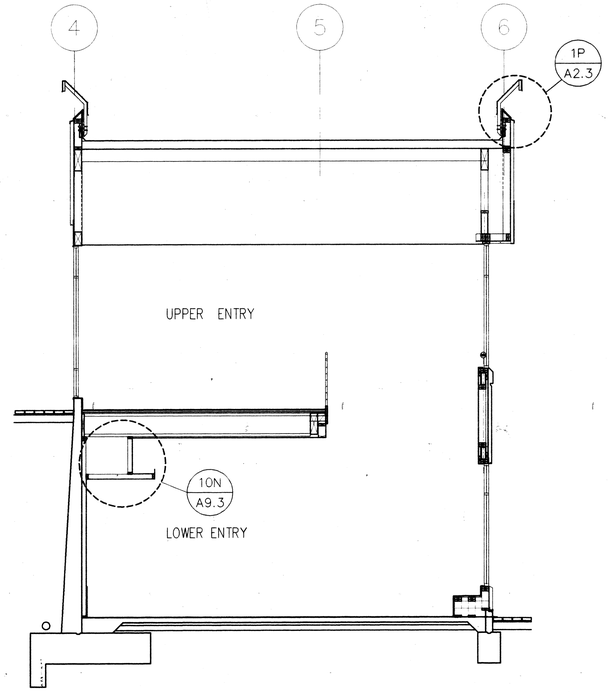

4 BUILDING SECTION
1/4" = 1'-0"

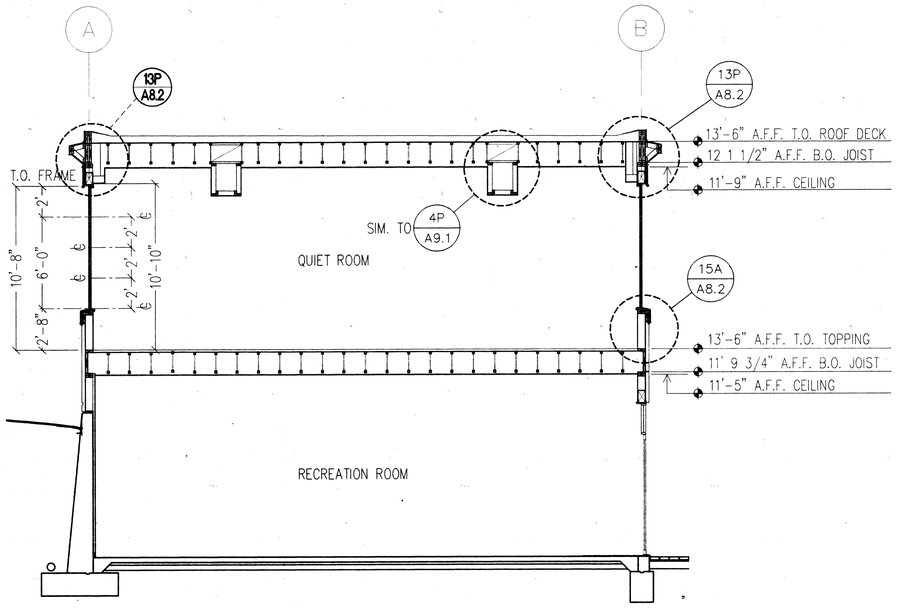

1 BUILDING SECTION
1/4" = 1'-0"

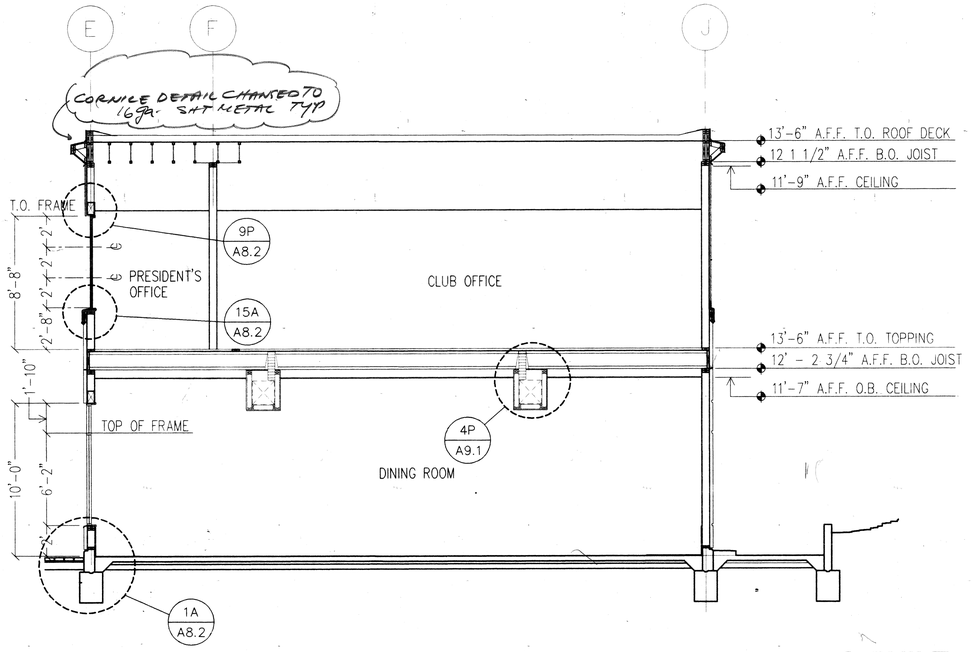

2 BUILDING SECTION
1/4" = 1'-0"

AS BUILT
CORRECTIONS BY HAF
CONTRACT NO.
DATE OCT 1 91

REVISION	DATE	DESCRIPTION	INITIAL

ISSUE FOR PROGRESS REVIEW	09/18/95
ISSUE FOR PLAN CHECK	O.R.S.10/9/95
ISSUE FOR PERMIT	04/04/96
ISSUE FOR BID	4/4/96
ISSUE FOR CONSTRUCTION	

SEAL:

LICENSED ARCHITECT PAUL D. CIANCHETTI No. C 5910 REN. 10-31-97 STATE OF CALIFORNIA

CONSULTANT:

INTERACTIVE RESOURCES
ARCHITECTURE • PLANNING • ENGINEERING
117 PARK PLACE
POINT RICHMOND
CALIFORNIA 94801
(510) 236-7435
(FAX.) 232-5325

PROJECT:

STUDENT UNION

Diablo Valley College
321 Golf Club Road
Pleasant Hill, CA. 94523

Contra Costa
Community College District

STAMP:

APPL. NUMBER:

KEY PLAN:

SHEET TITLE:

BUILDING SECTIONS

SCALE	AS NOTED
PROJ. NO.	A94087.04

PREPARATION AND REVIEW

PURPOSE	PERSONAL/INITIAL	DATE
DRAWN BY	IRI	09/18/95
PROJ. MGR.	GYN	09/18/95
PEER REVIEW	TKB	04/11/96

SHEET NUMBER:

A 3.5

NUMBER: OF:

L:\A\94087.04\CAD\A2-2.DWG

18

ROOM FINISH SCHEDULE

ROOM #	ROOM NAME	FLOOR	BASE		WAINSCOT		NORTH WALL		EAST WALL		SOUTH WALL		WEST WALL		CEILING			REMARKS
		MATERIAL	HT.	MATERIAL	HT.	MATERIAL	MATERIAL	FINISH	MATERIAL	FINISH	MATERIAL	FINISH	MATERIAL	FINISH	HT.	MATERIAL	FINISH	
101	RECREATION ROOM	VINYL TILE & CARPET	4"	RUBBER	–	–	VINYL WALL COVERING	–	VINYL WALL COVERING	–	VINYL WALL COVERING	–	VINYL WALL COVERING	–	10'-6" 11'-5"	SUSP.ACOUSTIC./GYP.BD.	PAINT	
102	MEN'S TOILET	CERAMIC TILE		CERAMIC TILE		CERAMIC TILE	GYP. BD.	C.T. & GREEN G.B.	GYP. BD.	–	GYP. BD.	–	GYPSUM BOARD	PAINT	9'-0"	GYPSUM BOARD	PAINT	SLOPE FLR. 1" TO F.D. (FROM ALL WALLS)
103	VESTIBULE	QUARRY TILE	8"	QUARRY TILE	–	–	VINYL WALL COVERING	–	VINYL WALL COVERING	–	VINYL WALL COVERING	–	VINYL WALL COVERING	–	9'-0"	GYPSUM BOARD	PAINT	
104	ELEV. MACH.	CONCRETE	4"	RUBBER	–	–	GYPSUM BOARD	PAINT	GYPSUM BOARD	PAINT	GYPSUM BOARD	PAINT	GYPSUM BOARD	PAINT	11'-5"	GYPSUM BOARD	PAINT	
105	ELEVATOR	VINYL TILE	4"	RUBBER	–	–												
106	LOWER ENTRY	* QUARRY TILE	8"	QUARRY TILE	2'-0"	QUARRY TILE	GYPSUM BOARD	PAINT	GYPSUM BOARD	PAINT	GYPSUM BOARD	PAINT	VINYL WALL COVERING GYPSUM BOARD	PAINT	VARIES	GYPSUM BOARD	PAINT	
107	STORAGE	VINYL TILE	4"	RUBBER	–	–	GYPSUM BOARD	PAINT	GYPSUM BOARD	PAINT	GYPSUM BOARD	PAINT	GYPSUM BOARD	PAINT	9'-0"	GYPSUM BOARD	PAINT	
108	JANITOR	CERAMIC		C.T.	–	–	GYPSUM BOARD & C.T.	PAINT	GYPSUM BOARD & C.T.	PAINT	GYPSUM BOARD	PAINT	GYPSUM BOARD	PAINT	9'-0"	GYPSUM BOARD	PAINT	
109	WOMEN'S TOILET	CERAMIC TILE		CERAMIC TILE		CERAMIC TILE	GYP. BD.	–	GYPSUM BOARD	PAINT	GYP. BD.	–	GYP. BD.	–	9'-0"	GYPSUM BOARD	PAINT	SLOPE FLR. 1" TO F.D. (FROM ALL WALLS)
110	ELECT. MECHANICAL	VINYL TILE	4"	RUBBER	–	–	GYPSUM BOARD	PAINT	GYPSUM BOARD	PAINT	GYPSUM BOARD	PAINT	GYPSUM BOARD	PAINT	9'-0"	GYPSUM BOARD	PAINT	
111	TRASH	CONCRETE	4"	NONE	–	–	CONCRETE	PAINT	PLASTER (EIFS)	PAINT	PLASTER (EIFS)	PAINT	CONCRETE	PAINT	12'-6"	PLASTER	PAINT	
112	CLASSROOM/KITCHEN	QUARRY TILE	2'-0"	QUARRY TILE		–	GYPSUM BOARD	PAINT	GYPSUM BOARD	PAINT	GYPSUM BOARD	PAINT	GYPSUM BOARD	PAINT	9'-10"	SUSPENDED ACOUSTIC	–	
113	SERVICE COUNTER	QUARRY TILE	2'-0"	QUARRY TILE		–	GYPSUM BOARD	PAINT	GYPSUM BOARD	PAINT	GYPSUM BOARD	PAINT	GYPSUM BOARD	PAINT	10'-0"	GYPSUM BOARD	–	
114	DINING ROOM	QUARRY TILE	8"	QUARRY TILE	2'-0"	QUARRY TILE	VINYL WALL COVERING	–	VINYL WALL COVERING	–	VINYL WALL COVERING	–	VINYL WALL COVERING	–	11'-7"	SUSP.ACOUSTIC/GYP.BD.	–	
115	KITCHEN/STORAGE	VINYL TILE	4"	RUBBER	–	–	GYPSUM BOARD	PAINT	GYPSUM BOARD	PAINT	GYPSUM BOARD	PAINT	GYPSUM BOARD	PAINT	10'-0"	GYPSUM BOARD	PAINT	
201	COMPUTER ROOM	CARPET	4"	RUBBER		–	GYPSUM BOARD	PAINT	GYPSUM BOARD	PAINT	GYPSUM BOARD	PAINT	GYPSUM BOARD	PAINT	9'-2"	SUSPENDED ACOUSTIC	–	
202	QUIET ROOM	CARPET	4"	WOOD	–	–	VINYL WALL COVERING	–	VINYL WALL COVERING	–	VINYL WALL COVERING	–	VINYL WALL COVERING	–	11'-9"	SUSP. ACOUSTIC/GYP.BD.	–	
203	UPPER ENTRY	* QUARRY TILE	8"	QUARRY TILE	–	–	GYPSUM BOARD	PAINT	GYPSUM BOARD	PAINT	GYPSUM BOARD	PAINT	GYPSUM BOARD	PAINT	VARIES(*)	GYPSUM BOARD	PAINT	(*) FLAT & VAULTED CEILING
204	CONFERENCE ROOM	CARPET TILE	4"	WOOD	2'-8"	CHAIR RAIL	GYPSUM BOARD	PAINT	GYPSUM BOARD	PAINT	GYPSUM BOARD	PAINT	GYPSUM BOARD	PAINT	11'-8" 10'-8" 10'-2"	SUSP.ACOUSTIC/GYP.BD.	PAINT	
205	OFFICE 1	CARPET	4"	RUBBER	–	–	GYPSUM BOARD	PAINT	GYPSUM BOARD	PAINT	GYPSUM BOARD	PAINT	GYPSUM BOARD	PAINT	9'-2"	SUSPENDED ACOUSTIC	PAINT	
206	ASDVC	CARPET	4"	RUBBER	–	–	GYPSUM BOARD	PAINT	GYPSUM BOARD	PAINT	GYPSUM BOARD	PAINT	GYPSUM BOARD	PAINT	9'-2"	SUSPENDED ACOUSTIC	PAINT	
207	ADVISER OFFICE	CARPET	4"	RUBBER	–	–	GYPSUM BOARD	PAINT	GYPSUM BOARD	PAINT	GYPSUM BOARD	PAINT	GYPSUM BOARD	PAINT	9'-2"	SUSPENDED ACOUSTIC	PAINT	
208	WORK RM.	CARPET	4"	RUBBER	2'-8"	CHAIR RAIL	GYPSUM BOARD	PAINT	GYPSUM BOARD	PAINT	GYPSUM BOARD	PAINT	GYPSUM BOARD	PAINT	9'-2"	SUSPENDED ACOUSTIC	PAINT	
209	OFFICE 2	CARPET	4"	RUBBER	–	–	GYPSUM BOARD	PAINT	GYPSUM BOARD	PAINT	GYPSUM BOARD	PAINT	GYPSUM BOARD	PAINT	9'-2"	SUSPENDED ACOUSTIC	PAINT	
210	CORRIDOR	CARPET	4"	WOOD	–	–	GYPSUM BOARD	PAINT	GYPSUM BOARD	PAINT	GYPSUM BOARD	PAINT	GYPSUM BOARD	PAINT	8'-8"	GYPSUM BOARD	PAINT	
211	CLOSET	VINYL TILE	4"	RUBBER	–	–	GYPSUM BOARD	PAINT	GYPSUM BOARD	PAINT	GYPSUM BOARD	PAINT	GYPSUM BOARD	PAINT	9'-2"	GYPSUM BOARD	PAINT	
212	CLUB OFFICE	VINYL TILE	4"	RUBBER	–	–	GYPSUM BOARD	PAINT	GYPSUM BOARD	PAINT	GYPSUM BOARD	PAINT	GYPSUM BOARD	PAINT	9'-2"	SUSP. ACOUSTIC	–	
213	PRESIDENT	CARPET	4"	RUBBER	–	–	GYPSUM BOARD	PAINT	GYPSUM BOARD	PAINT	GYPSUM BOARD	PAINT	GYPSUM BOARD	PAINT	9'-2"	SUSP. ACOUSTIC	–	
	F5																	

RUBBER

* QUARRY TILE (FLOOR / BASE) @ LOWER ENTRY – ALTERNATE # 6
* QUARRY TILE (FLOOR / BASE) @ MAIN ENTRY – ALTERNATE # 7

AS BUILT
CORRECTED BY HAF
CONTRACT Oct 1 97
DATE

REVISION	DATE	DESCRIPTION	INITIAL

ISSUE FOR PROGRESS REVIEW	09/18/95
ISSUE FOR PLAN CHECK	O.R.S.10/9/95
ISSUE FOR PERMIT	04/04/96
ISSUE FOR BID	4/4/96
ISSUE FOR CONSTRUCTION	

SEAL:

LICENSED ARCHITECT PAUL D. GIANULIS C 15431 REN. 10-31-97 STATE OF CALIFORNIA

CONSULTANT:

INTERACTIVE RESOURCES
ARCHITECTURE • PLANNING • ENGINEERING
117 PARK PLACE
POINT RICHMOND
CALIFORNIA 94801
(510) 236-7435
(FAX) 232-5325

PROJECT:

STUDENT UNION

Diablo Valley College
321 Golf Club Road
Pleasant Hill, CA. 94523

Contra Costa Community College District

STAMP:

APPL. NUMBER:

KEY PLAN:

SHEET TITLE:

FINISH SCHEDULE

SCALE	AS NOTED
PROJ. NO.	A94087.04

PREPARATION AND REVIEW		
PURPOSE	PERSONAL/INITIAL	DATE
DRAWN BY	IRI	09/18/95
PROJ. MGR.	GYN	09/18/95
PEER REVIEW	TKB	04/11/96

SHEET NUMBER:

A 4.1

NUMBER: OF:

L:\A-94087.04\CAD\A4-1.DWG

DOOR SCHEDULE

MARK	TYPE	SIZE	THICK-NESS	MATERIAL	FINISH	FRAME MATERIAL	FRAME TYPE	GLASS	FIRE RATING
101	BB	6'0" X 8'1/4"	1-3/4"	ALUMINUM STOREFRONT	ANODIZED	ALUMINUM	ANODIZED	TEMPERED	—
102	F	7'1/2" X 8'2" ROUGH OPENING	1-3/4"	ALUMINUM AUTOMATIC SLIDING ENTRANCE	ANODIZED	ALUMINUM	ANODIZED	TEMPERED	—
103	BB	6'0" X 8'1/4"	1-3/4"	ALUMINUM STOREFRONT	ANODIZED	ALUMINUM	ANODIZED	TEMPERED	—
104	B	3'0" X 8'1/4"	1-3/4"	ALUMINUM STOREFRONT	ANODIZED	ALUMINUM	ANODIZED	TEMPERED	—
105	D	6'0" X 8'0"	1-3/4"	ALUMINUM	ANODIZED	STEEL	PAINT	—	—
106	A	3'0" X 8'0"	1-3/4"	GALVANIZED STEEL	PAINT	GALVANIZED STEEL	PAINT	—	—
107	A	3'0" x 7'0"	1-3/4"	SOLID CORE WOOD FLUSH	PAINT	STEEL	PAINT	—	—
108	A	3'0" x 7'0"	1-3/4"	SOLID CORE WOOD FLUSH	TRANSPARENT	STEEL	PAINT	—	—
109	CC	6'0" x 7'0"	1-3/4"	SOLID CORE WOOD FLUSH	TRANSPARENT	STEEL	PAINT	TEMPERED GLASS	—
110	A	3'0" x 7'0"	1-3/4"	SOLID CORE WOOD FLUSH	TRANSPARENT	STEEL	PAINT	—	—
111	A	3'0" x 7'0"	1-3/4"	SOLID CORE WOOD FLUSH	TRANSPARENT	STEEL	PAINT	—	—
112	A	3'0" x 7'0"	1-3/4"	SOLID CORE WOOD FLUSH	TRANSPARENT	STEEL	PAINT	—	—
113	G	3'0" x 7'0"	1-3/4"	SOLID CORE WOOD FLUSH	TRANSPARENT	STEEL	PAINT	—	—
114	AA	6'0" x 7'0"	1-3/4"	SOLID CORE WOOD FLUSH	TRANSPARENT	STEEL	PAINT	—	—
115	CC	6'0" x 7'0"	1-3/4"	SOLID CORE WOOD FLUSH	TRANSPARENT	STEEL	PAINT	TEMPERED GLASS	—
—	—	—	—	—	—	—	—	—	—
117	A	3'0" x 7'0"	1-3/4"	SOLID CORE WOOD FLUSH	TRANSPARENT	STEEL	PAINT	—	—
118	G	3'0" x 7'0"	1-3/4"	SOLID CORE WOOD FLUSH	TRANSPARENT	STEEL	PAINT	—	—
201	E	11'10" X 8'8" ROUGH OPENING	1-3/4"	ALUMINUM AUTOMATIC SLIDING ENTRANCE	ANODIZED	ALUMINUM	ANODIZED	TEMPERED	—
202	B	3'0" x 8' 6 1/4"	1-3/4"	ALUMINUM STOREFRONT	ANODIZED	ALUMINUM	ANODIZED	TEMPERED	—
203	BB	6'0" x 8' 6 1/4"	1-3/4"	ALUMINUM STOREFRONT	ANODIZED	ALUMINUM	ANODIZED	TEMPERED	—
204	B	3'0" x 8' 6 1/4"	1-3/4"	ALUMINUM STOREFRONT	ANODIZED	ALUMINUM	ANODIZED	TEMPERED	—
205	A	3'0" x 7'0"	1-3/4"	GALVANIZED STEEL	PAINT	GALVANIZED STEEL	PAINT	—	—
206	C	3'0" x 7'0"	1-3/4"	SOLID CORE WOOD FLUSH	TRANSPARENT	STEEL	PAINT	TEMPERED GLASS	—
207	C	3'0" x 7'0"	1-3/4"	SOLID CORE WOOD FLUSH	TRANSPARENT	STEEL	PAINT	TEMPERED GLASS	—
208	C	3'0" x 7'0"	1-3/4"	SOLID CORE WOOD FLUSH	TRANSPARENT	STEEL	PAINT	TEMPERED GLASS	—
209	A	3'0" x 7'0"	1-3/4"	SOLID CORE WOOD FLUSH	TRANSPARENT	STEEL	PAINT	—	—
210	C	3'0" x 7'0"	1-3/4"	SOLID CORE WOOD FLUSH	TRANSPARENT	STEEL	PAINT	TEMPERED GLASS	—
211	CC	6'0" x 7'0"	1-3/4"	SOLID CORE WOOD FLUSH	TRANSPARENT	STEEL	PAINT	TEMPERED GLASS	—
212	A	3'0" x 7'0"	1-3/4"	SOLID CORE WOOD FLUSH	TRANSPARENT	STEEL	PAINT	—	—
213	A	3'0" x 7'0"	1-3/4"	SOLID CORE WOOD FLUSH	TRANSPARENT	STEEL	PAINT	—	—
214	A	3'0" x 7'0"	1-3/4"	SOLID CORE WOOD FLUSH	TRANSPARENT	STEEL	PAINT	—	—
215	A	3'0" x 7'0"	1-3/4"	SOLID CORE WOOD FLUSH	TRANSPARENT	STEEL	PAINT	—	—
216	A	3'0" x 7'0"	1-3/4"	SOLID CORE WOOD FLUSH	TRANSPARENT	STEEL	PAINT	—	—
217	AA	3'8" x 7'0"	1-3/4"	SOLID CORE WOOD FLUSH	TRANSPARENT	STEEL	PAINT	—	—
218	AA	3'8" x 7'0"	1-3/4"	SOLID CORE WOOD FLUSH	TRANSPARENT	STEEL	PAINT	—	—

HARDWARE SCHEDULE

MARK	OPERATING TRIM: HINGE OR PIVOT	LOCKSET OR LATCHSET	FLUSH OR SURFACE BOLTS	CLOSER/ COORDINATE	EXIT DEVICE	PUSH/ PULL	KICK PLATES/ LEAF	OTHER HARDWARE: STOP/ LEAF	WEATHERSTRIPPING: PERIMETER/ HEAD/JAMB	HEAD	SILL	THRESHOLD
101	PIVOT SET 1	—	—	2030	9947NL-OPX 9947 EO	VD-392-7/ LEAF	KAWNEER "WEARSHIELD"	F9078X	✳	✳	✳	
102	—	✳	—	✳	—	—	—	—	✳	✳	✳	
103	PIVOT SET 1	—	—	2030	9947NL-OPX 9947 EO	VD-392-7/ LEAF	KAWNEER "WEARSHIELD"	F9078X	✳	✳	✳	
104	PIVOT SET 1	—	—	2030	99NL-OP-MD	VD-392-7	KAWNEER "WEARSHIELD"	F9078X	✳	✳	✳	
105	—	✳	—	—	—	—	—	—	—	—	—	—
106	BB1191/SS	CL3651	—	4040	—	—	—	GJ410H	290AS			
107	BB1279	CL3655	—	—	—	—	—	GJ410S	—	—	—	252A
108	PIVOT SET 2	DL2013	—	—	—	—	2-ARMOR	GJ100S	—	—	—	—
109	BB1279	—	—	4040	9947NL-OPX 9947 EO	VD-392-7/LEAF	KICK	W12X	—	—	—	—
110	BB1279	CL3657	—	—	—	—	KICK	W12X	—	—	—	252A
111	BB1279	CL3651	—	4040	—	—	2-KICK	W12X	—	—	—	—
112	BB1279	CL3657	—	—	—	—	KICK	W12X	—	—	—	252A
113	BB1279	DL2013	—	4040	—	47/47 X 2903	2-KICK	W12X	—	—	—	—
114	BB1279	CL3657	FB6W	—	—	—	2-KICK	GJ4105 ✳	—	—	—	252A
115	BB1279	—	—	4040	9947WDC-NL X 9947WDC-DT	VD-392-7 / LEAF	2-KICK	W12X	—	—	—	252A
—	—	—	—	—	—	—	—	—	—	—	—	—
117	1279	CL3657	—	—	—	—	KICK	W12X	—	—	—	252A
118	BB1279	—	—	4040	—	47/47 X 2903	2-KICK	W12X	—	—	—	—
201	—	✳	—	✳	—	—	—	—	✳	✳	✳	
202	PIVOT SET 1	—	—	2030	99NL-OP-MD	VD-392-7	KAWNEER "WEARSHIELD"	F9078X	✳	✳	✳	
203	PIVOT SET 1	—	—	2030	9947NL - OP X 9947EO	VD-392-7/LEAF	KAWNEER "WEARSHIELD"	F9078X	✳	✳	✳	
204	PIVOT SET 1	—	—	2030	99NL - OP-MD	VD-392-7	KAWNEER "WEARSHIELD"	F9078X	✳	✳	✳	
205	BB1191/SS	CL3657	—	1460	—	—	—	F9078X	290AS			
206	BB1279	CL3651	—	4040	—	—	2-KICK	FB061 X SERIES	—	—	—	236A
207	BB1279	CL3651	—	4040	—	—	2-KICK	W12X	—	—	—	236A
208	BB1279	CL3651	—	4040	—	—	KICK	FB061 X SERIES	—	—	—	236A
209	BB1279	CL3651	—	—	—	—	KICK	W12X	—	—	—	—
210	BB1279	CL3651	—	4040	—	—	KICK	FB061 X SERIES	—	—	—	236A
211	BB1279	CL3651 (ACTIVE LEAF)	FB8	4040	—	—	KICK	W12X	—	—	—	236A
212	BB1279	CL3651	—	—	—	—	KICK	W12X	—	—	—	—
213	BB1279	CL3610	—	—	—	—	KICK	W12X	—	—	—	—
214	BB1279	CL3651	—	—	—	—	KICK	W12X	—	—	—	—
215	BB1279	CL3651	—	—	—	—	KICK	W12X	—	—	—	—
216	BB1279	CL3651	—	—	—	—	KICK	W12X	—	—	—	—
217	BB1279	CL3651										
218	BB1279	CL3651										

REMARKS

MARK	REMARKS
101	✳ DOOR MANUFACTURER'S STD.
102	✳ AUTOMATIC SLIDING ENTRANCE W/ JAMB KEY SWITCH
103	✳ DOOR MANUFACTURER'S STD.
104	✳ DOOR MANUFACTURER'S STD.
105	✳ HARDWARE BY DOOR MFR. EXCEPT PROVIDE CYLINDER
106	✳ CONT. @ HEAD
107	
108	
109	
110	✳ ACTIVE LEAF
111	
112	
113	PROVIDE DOOR LOUVER
114	✳ ACTIVE LEAF
115	
—	
117	UNDERCUT DOOR 3/4" MIN. CLEAR
118	PROVIDE DOOR LOUVER
201	✳ AUTOMATIC SLIDING ENTRANCE W/ JAMB KEY SWITCH
202	✳ DOOR MANUFACTURER'S STD.
203	✳ DOOR MANUFACTURER'S STD.
204	✳ DOOR MANUFACTURER'S STD.
205	
206	
207	
208	
209	
210	
211	
212	
213	
214	
215	
216	
217	TV CABINET DOORS SEE SHEET A9.3
218	SEE SHEET A9.3

Doors Nos 230, 231 & 232 Added. See Arch ASI

DOOR TYPES:

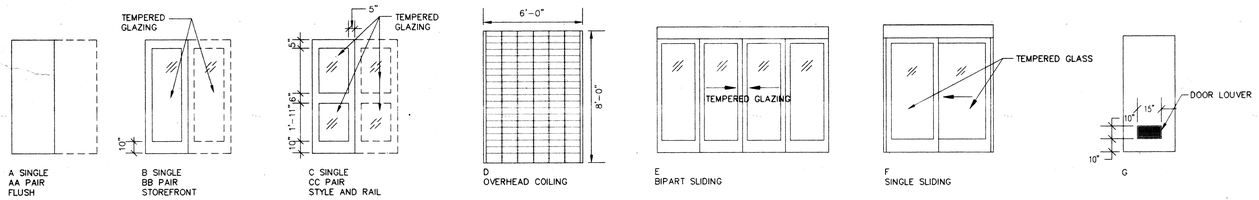

A SINGLE AA PAIR FLUSH

B SINGLE BB PAIR STOREFRONT

C SINGLE CC PAIR STYLE AND RAIL

D OVERHEAD COILING

E BIPART SLIDING

F SINGLE SLIDING

G

SHEET NOTES FOR HARDWARE/DOOR

1. NUMBERS USED IN THE ABOVE SCHEDULE ARE TAKEN FROM THE CATALOGS OF THE FOLLOWING MANUFACTURERS EXCEPT AS OTHERWISE NOTED:

MINGES: HAGER
PIVOT SET 1: KAWNEER TOP, INTERMEDIATE AND BOTTOM PIVOT
PIVOT SET 2: RIXSON 30PH X 340
LOCKSETS: CORBIN RUSSWIN, U.O.N.
FLUSH BOLTS: GLYNN-JOHNSON
CLOSER: LCN, U.O.N.
EXIT DEVICE: VON DUPRIN
PUSH/PULL: BBW, UNLESS PREFIXED "VD"- (VON DUPRIN)
KICK PLATES: BBW, U.O.N.
STOPS: BBW, UNLESS PREFIXED "GJ"- (GLYNN- JOHNSON)
WEATHERSTRIPPING: PEMKO, U.O.N.
THRESHOLDS: PEMKO, U.O.N.

2. SIGNAGE: REFER TO DETAIL ✳ RIGHT FOR SIGNAGE ON TOILET ROOM DOORS.

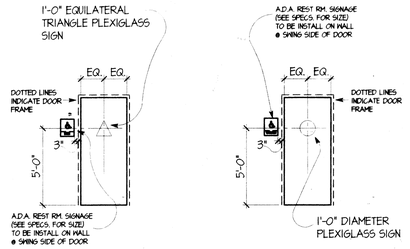

AS BUILT
CORRECTIONS BY HAF
CONTRACT NO. —
DATE OCT 1 '97

REVISION	DATE	DESCRIPTION	INITIAL

ISSUE FOR PROGRESS REVIEW	09/18/95
ISSUE FOR PLAN CHECK	O.R.S.10/9/95
ISSUE FOR PERMIT	04/04/96
ISSUE FOR BID	4/4/96
ISSUE FOR CONSTRUCTION	

SEAL:



CONSULTANT:

INTERACTIVE RESOURCES
ARCHITECTURE • PLANNING • ENGINEERING
117 PARK PLACE
POINT RICHMOND
CALIFORNIA 94801
(510) 236-7435
(FAX) 232-5325

PROJECT:

STUDENT UNION

Diablo Valley College
321 Golf Club Road
Pleasant Hill, CA. 94523

Contra Costa Community College District

STAMP:

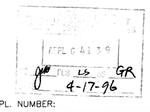

APPL. NUMBER:

KEY PLAN:

SHEET TITLE:

DOOR/ HARDWARE SCHEDULE

SCALE	AS NOTED
PROJ. NO.	A94087.04

PREPARATION AND REVIEW		
PURPOSE	PERSONAL/INITIAL	DATE
DRAWN BY	IRI	09/18/95
PROJ. MGR.	GYN	09/18/95
PEER REVIEW	TKB	04/11/96

SHEET NUMBER:

A 4.2

NUMBER: OF:

L:\A94087.01\CAD\A4-12.DWG

WINDOW TYPES

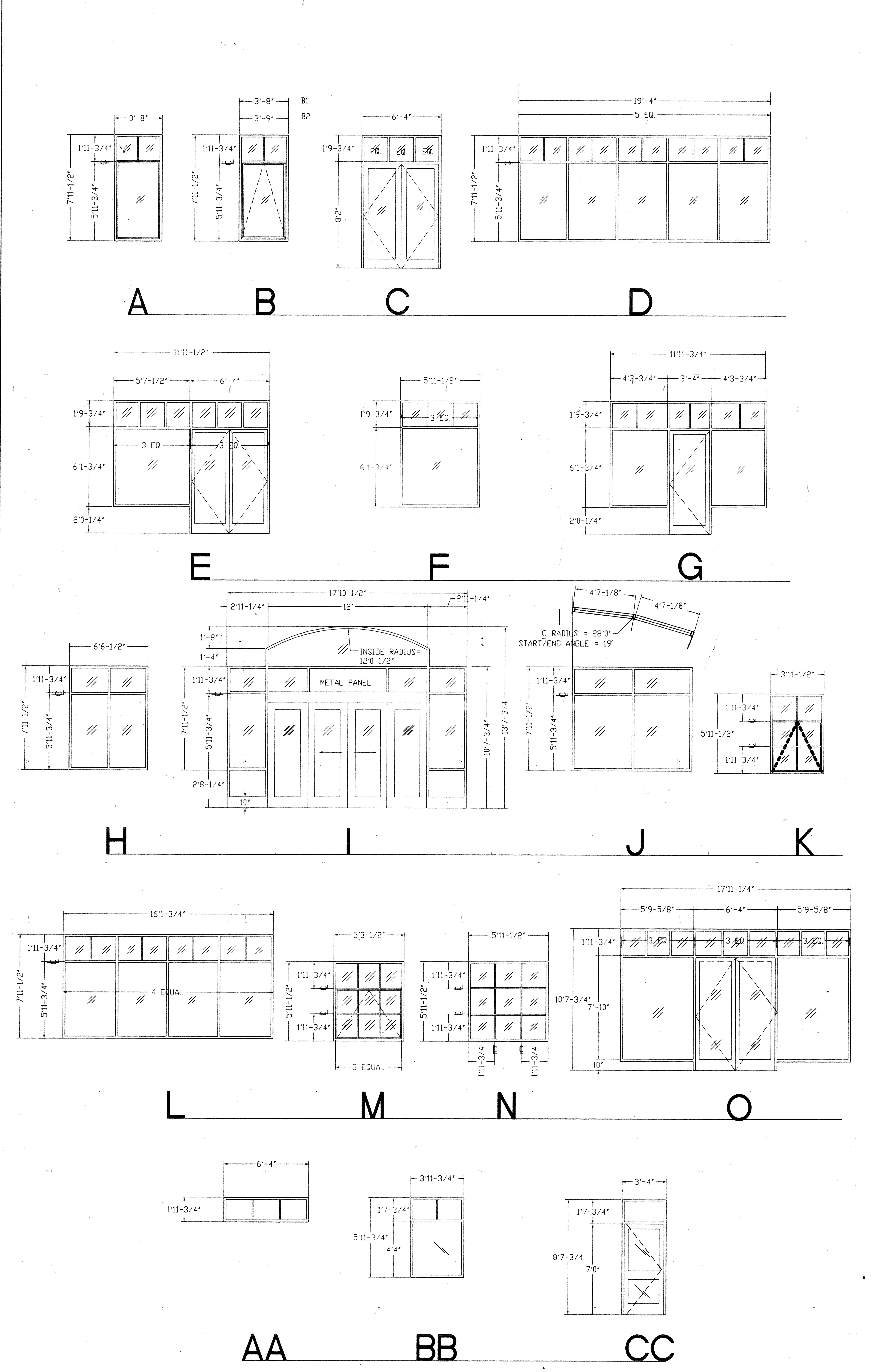

WINDOW SCHEDULE

MARK ◇	TYPE	LOCATION	SIZE (R.O.) WIDTH	SIZE (R.O.) HEIGHT	SILL HEIGHT	SASH AND FRAME MATERIAL	SASH AND FRAME FINISH	GLAZING	BLINDS	REMARKS
101	A	RECREATION RM.	3'8-1/2"	8'0"	2'0"	ALUMINUM	BRONZE ANODIZED	TINTED EXTERIOR CLEAR INTERIOR	–	
102	A	RECREATION RM.	3'8-1/2"	8'0"	2'0"	ALUMINUM	BRONZE ANODIZED	TINTED EXTERIOR CLEAR INTERIOR	–	
103	A	RECREATION RM.	3'8-1/2"	8'0"	2'0"	ALUMINUM	BRONZE ANODIZED	TINTED EXTERIOR CLEAR INTERIOR	–	
104	A	RECREATION RM.	3'8-1/2"	8'0"	2'0"	ALUMINUM	BRONZE ANODIZED	TINTED EXTERIOR CLEAR INTERIOR	–	
105	C	RECREATION RM.	6'4"	10'0"	–	ALUMINUM STOREFRONT	BRONZE ANODIZED	TINTED EXTERIOR CLEAR INTERIOR	–	
106	D	LOWER ENTRY	19'4-3/4" (*)	8'0"	2'0"	ALUMINUM STOREFRONT	BRONZE ANODIZED	TINTED EXTERIOR CLEAR INTERIOR	–	(*) APPROX.-CURVED WINDOW
107	E	DINING ROOM	12'0"	10'0"	2'0"	ALUMINUM STOREFRONT	BRONZE ANODIZED	TINTED EXTERIOR CLEAR INTERIOR	–	
108	F	DINING ROOM	6'0"	8'0"	2'0"	ALUMINUM STOREFRONT	BRONZE ANODIZED	TINTED EXTERIOR CLEAR INTERIOR	–	
109	F	DINING ROOM	6'0"	8'0"	2'0"	ALUMINUM STOREFRONT	BRONZE ANODIZED	TINTED EXTERIOR CLEAR INTERIOR	–	
110	F	DINING ROOM	6'0"	8'0"	2'0"	ALUMINUM STOREFRONT	BRONZE ANODIZED	TINTED EXTERIOR CLEAR INTERIOR	–	
111	F	DINING ROOM	6'0"	8'0"	2'0"	ALUMINUM STOREFRONT	BRONZE ANODIZED	TINTED EXTERIOR CLEAR INTERIOR	–	
112	G	DINING ROOM	12'0"	8'0"	2'0"	ALUMINUM STOREFRONT	BRONZE ANODIZED	TINTED EXTERIOR CLEAR INTERIOR	–	
201	H	UPPER ENTRY	6'7-1/8"	8'0"	2'8"	ALUMINUM STOREFRONT	BRONZE ANODIZED	TINTED EXTERIOR CLEAR INTERIOR	–	
202	I	UPPER ENTRY	17'11"	13'8	–	ALUMINUM STOREFRONT	BRONZE ANODIZED	TINTED EXTERIOR CLEAR INTERIOR	–	
203	J	UPPER ENTRY	9'3" (*)	8'0"	2'8"	ALUMINUM STOREFRONT	BRONZE ANODIZED	TINTED EXTERIOR CLEAR INTERIOR	–	
204	K	COMPUTER RM.	4'0"	6'0"	2'8"	ALUMINUM	BRONZE ANODIZED	TINTED EXTERIOR CLEAR INTERIOR	YES	PROJECT OUT OPERABLE SASH
205	K	COMPUTER RM.	4'0"	6'0"	2'8"	ALUMINUM	BRONZE ANODIZED	TINTED EXTERIOR CLEAR INTERIOR	YES	PROJECT OUT OPERABLE SASH
206	K	COMPUTER RM.	4'0"	6'0"	2'8"	ALUMINUM	BRONZE ANODIZED	TINTED EXTERIOR CLEAR INTERIOR	YES	PROJECT OUT OPERABLE SASH
207	A	QUIET ROOM	3'8-1/2"	8'0"	2'8"	ALUMINUM	BRONZE ANODIZED	TINTED EXTERIOR CLEAR INTERIOR	YES	
208	B2	QUIET ROOM	3'9-1/2"	8'0"	2'8"	ALUMINUM	BRONZE ANODIZED	TINTED EXTERIOR CLEAR INTERIOR	YES	PROJECT OUT OPERABLE SASH
209	A	QUIET ROOM	3'8-1/2"	8'0"	2'8"	ALUMINUM	BRONZE ANODIZED	TINTED EXTERIOR CLEAR INTERIOR	YES	
210	A	QUIET ROOM	3'8-1/2"	8'0"	2'8"	ALUMINUM	BRONZE ANODIZED	TINTED EXTERIOR CLEAR INTERIOR	YES	
211	B1	QUIET ROOM	3'8-1/2"	8'0"	2'8"	ALUMINUM	BRONZE ANODIZED	TINTED EXTERIOR CLEAR INTERIOR	YES	PROJECT OUT OPERABLE SASH
212	B1	QUIET ROOM	3'8-1/2"	8'0"	2'8"	ALUMINUM	BRONZE ANODIZED	TINTED EXTERIOR CLEAR INTERIOR	YES	
213	A	QUIET ROOM	3'8-1/2"	8'0"	2'8"	ALUMINUM	BRONZE ANODIZED	TINTED EXTERIOR CLEAR INTERIOR	YES	
214	A	QUIET ROOM	3'8-1/2"	8'0"	2'8"	ALUMINUM	BRONZE ANODIZED	TINTED EXTERIOR CLEAR INTERIOR	YES	
215	B2	QUIET ROOM	3'9-1/2"	8'0"	2'8"	ALUMINUM	BRONZE ANODIZED	TINTED EXTERIOR CLEAR INTERIOR	YES	PROJECT OUT OPERABLE SASH
216	A	QUIET ROOM	3'8-1/2"	8'0"	2'8"	ALUMINUM	BRONZE ANODIZED	TINTED EXTERIOR CLEAR INTERIOR	YES	
217	D	UPPER ENTRY	19'4-3/4" (*)	8'0"	2'8" A.F.F.	ALUMINUM STOREFRONT	BRONZE ANODIZED	TINTED EXTERIOR CLEAR INTERIOR	–	(*) APPROX.-CURVED WINDOW
218	L	UPPER ENTRY	16'2-1/4"	8'0"	2'8" A.F.F.	ALUMINUM STOREFRONT	BRONZE ANODIZED	TINTED EXTERIOR CLEAR INTERIOR	–	
219	K	CORRIDOR	4'0"	6'0"	2'8"	ALUMINUM	BRONZE ANODIZED	TINTED EXTERIOR CLEAR INTERIOR	YES	PROJECT OUT OPERABLE SASH
220	K	CORRIDOR	4'0"	6'0"	2'8"	ALUMINUM	BRONZE ANODIZED	TINTED EXTERIOR CLEAR INTERIOR	YES	PROJECT OUT OPERABLE SASH
221	M	PRESIDENT'S OFFICE	5'4"	6'0"	2'8"	ALUMINUM	BRONZE ANODIZED	TINTED EXTERIOR CLEAR INTERIOR	YES	PROJECT OUT OPERABLE SASH
222	N	PRESIDENT'S OFFICE	6'0"	6'0"	2'8"	ALUMINUM	BRONZE ANODIZED	TINTED EXTERIOR CLEAR INTERIOR	YES	
223	N	CLUB OFFICE	6'0"	6'0"	2'8"	ALUMINUM	BRONZE ANODIZED	TINTED EXTERIOR CLEAR INTERIOR	YES	
224	N	CLUB OFFICE	6'0"	6'0"	2'8"	ALUMINUM	BRONZE ANODIZED	TINTED EXTERIOR CLEAR INTERIOR	YES	
225	K	CLUB OFFICE	4'0"	6'0"	2'8"	ALUMINUM	BRONZE ANODIZED	TINTED EXTERIOR CLEAR INTERIOR	YES	PROJECT OUT OPERABLE SASH
226	K	CLUB OFFICE	4'0"	6'0"	2'8"	ALUMINUM	BRONZE ANODIZED	TINTED EXTERIOR CLEAR INTERIOR	YES	PROJECT OUT OPERABLE SASH
227	K	WORK ROOM	4'0"	6'0"	2'8"	ALUMINUM	BRONZE ANODIZED	TINTED EXTERIOR CLEAR INTERIOR	YES	PROJECT OUT OPERABLE SASH
228	K	WORK ROOM	4'0"	6'0"	2'8"	ALUMINUM	BRONZE ANODIZED	TINTED EXTERIOR CLEAR INTERIOR	YES	PROJECT OUT OPERABLE SASH
229	K	ADVISOR'S OFFICE	4'0"	6'0"	2'8"	ALUMINUM	BRONZE ANODIZED	TINTED EXTERIOR CLEAR INTERIOR	YES	PROJECT OUT OPERABLE SASH
230	K	OFFICE 1	4'0"	6'0"	2'8"	ALUMINUM	BRONZE ANODIZED	TINTED EXTERIOR CLEAR INTERIOR	YES	PROJECT OUT OPERABLE SASH
231	K	OFFICE 1	4'0"	6'0"	2'8"	ALUMINUM	BRONZE ANODIZED	TINTED EXTERIOR CLEAR INTERIOR	YES	PROJECT OUT OPERABLE SASH
232	N	CONFERENCE ROOM	6'0"	6'0"	2'8"	ALUMINUM	BRONZE ANODIZED	TINTED EXTERIOR CLEAR INTERIOR	YES	
233	N	CONFERENCE ROOM	6'0"	6'0"	2'8"	ALUMINUM	BRONZE ANODIZED	TINTED EXTERIOR CLEAR INTERIOR	YES	
234	O	CONFERENCE ROOM	18'0"	10'8"	8"	ALUMINUM STOREFRONT	BRONZE ANODIZED	TINTED EXTERIOR CLEAR INTERIOR	–	
301	AA	RECREATION RM.	6'4-1/4"	2'0"	7'5-1/2"	ALUMINUM	BRONZE ANODIZED	CLEAR TEMPERED	–	INTERIOR WINDOW
302	AA	DINING ROOM	6'4-1/4"	2'0"	7'5-1/2"	ALUMINUM	BRONZE ANODIZED	CLEAR TEMPERED	–	INTERIOR WINDOW
401	CC	SECOND FLOOR	3'4-1/4"	8'8"	–	ALUMINUM	BRONZE ANODIZED	CLEAR TEMPERED	–	INTERIOR WINDOW
402	BB	SECOND FLOOR	4'0"	6'0"	2'8"	ALUMINUM	BRONZE ANODIZED	CLEAR TEMPERED	YES	INTERIOR WINDOW
403	BB	SECOND FLOOR	4'0"	6'0"	2'8"	ALUMINUM	BRONZE ANODIZED	CLEAR TEMPERED	YES	INTERIOR WINDOW
404	CC	SECOND FLOOR	3'4-1/4"	8'8"	–	ALUMINUM	BRONZE ANODIZED	CLEAR TEMPERED	–	INTERIOR WINDOW
405	BB	SECOND FLOOR	4'0"	6'0"	2'8"	ALUMINUM	BRONZE ANODIZED	CLEAR TEMPERED	YES	INTERIOR WINDOW
406	BB	SECOND FLOOR	4'0"	6'0"	2'8"	ALUMINUM	BRONZE ANODIZED	CLEAR TEMPERED	YES	
407	CC	SECOND FLOOR	3'4-1/4"	8'8"	–	ALUMINUM	BRONZE ANODIZED	CLEAR TEMPERED	–	INTERIOR WINDOW
408	CC	SECOND FLOOR	3'4-1/4"	8'8"	–	ALUMINUM	BRONZE ANODIZED	CLEAR TEMPERED	–	INTERIOR WINDOW
409	BB	SECOND FLOOR	4'0"	6'0"	2'8"	ALUMINUM	BRONZE ANODIZED	CLEAR TEMPERED	YES	INTERIOR WINDOW
410	BB	SECOND FLOOR	4'0"	6'0"	2'8"	ALUMINUM	BRONZE ANODIZED	CLEAR TEMPERED	YES	INTERIOR WINDOW
411	CC	SECOND FLOOR	3'4-1/4"	8'8"	–	ALUMINUM	BRONZE ANODIZED	CLEAR TEMPERED	–	INTERIOR WINDOW
412	CC	SECOND FLOOR	3'4-1/4"	8'8"	–	ALUMINUM	BRONZE ANODIZED	CLEAR TEMPERED	–	INTERIOR WINDOW
413	BB	SECOND FLOOR	4'0"	6'0"	2'8"	ALUMINUM	BRONZE ANODIZED	CLEAR TEMPERED	YES	INTERIOR WINDOW
414	CC	SECOND FLOOR	3'4-1/4"	8'8"	–	ALUMINUM	BRONZE ANODIZED	CLEAR TEMPERED	–	INTERIOR WINDOW
415	BB	SECOND FLOOR	4'0"	6'0"	2'8"	ALUMINUM	BRONZE ANODIZED	CLEAR TEMPERED	YES	INTERIOR WINDOW
416	CC	SECOND FLOOR	3'4-1/4"	8'8"	–	ALUMINUM	BRONZE ANODIZED	CLEAR TEMPERED	–	INTERIOR WINDOW

REVISION	DATE	DESCRIPTION	INITIAL

ISSUE FOR PROGRESS REVIEW	09/18/95
ISSUE FOR PLAN CHECK	O.R.S.10/9/95
ISSUE FOR PERMIT	04/04/96
ISSUE FOR BID	4/4/96
ISSUE FOR CONSTRUCTION	

SEAL: LICENSED ARCHITECT PAUL D. CIANFICHI No. C 14225 REN. 10-31-97 STATE OF CALIFORNIA

CONSULTANT:

INTERACTIVE
RESOURCES
ARCHITECTURE • PLANNING • ENGINEERING
117 PARK PLACE
POINT RICHMOND
CALIFORNIA 94801
(510) 236-7435
(FAX.) 232-5325

PROJECT:
STUDENT UNION

Diablo Valley College
321 Golf Club Road
Pleasant Hill, CA. 94523

Contra Costa Community College District

STAMP: APPL 6 4139 FLS LS SS GR 4-17-96

APPL. NUMBER:

KEY PLAN:

SHEET TITLE:
WINDOW SCHEDULE

SCALE	
PROJ. NO.	AS NOTED 94087.04

PREPARATION AND REVIEW		
PURPOSE	PERSONAL/INITIAL	DATE
DRAWN BY	IRI	09/18/95
PROJ. MGR.	GYN	09/18/95
PEER REVIEW	TKB	04/11/96

SHEET NUMBER: **A 4.3**
NUMBER: 47 OF:

AS BUILT CORRECTIONS BY CONTRACT NO. DATE OCT 1997 HHF

L:\IA\94087.04\CAD\A4.3.DWG

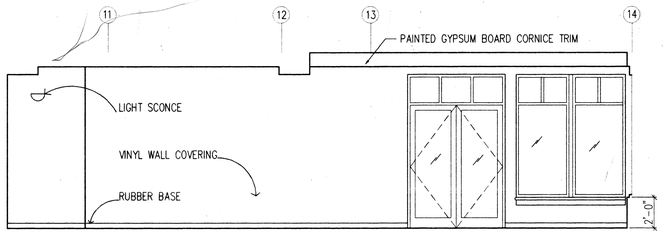

NORTH

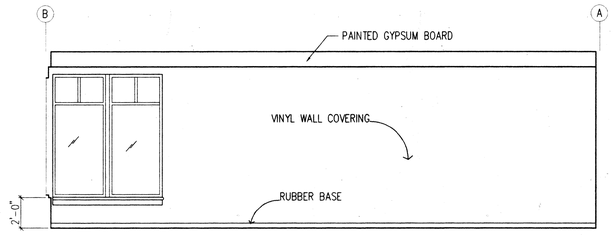

EAST

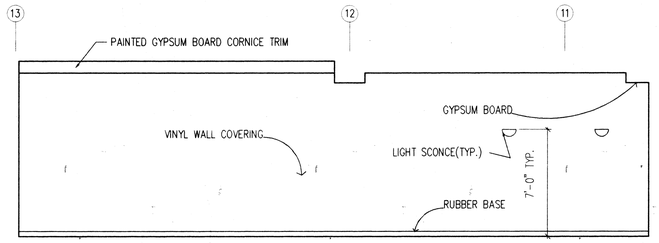

SOUTH

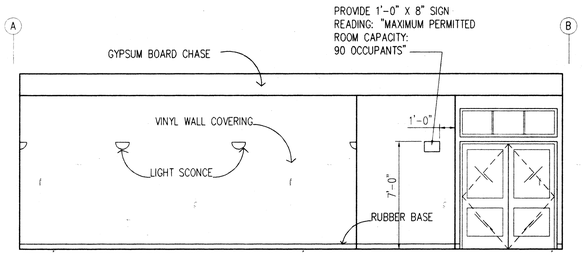

WEST

RM 101 RECREATION ROOM

1/4"=1'-0"

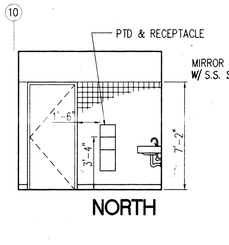

NORTH

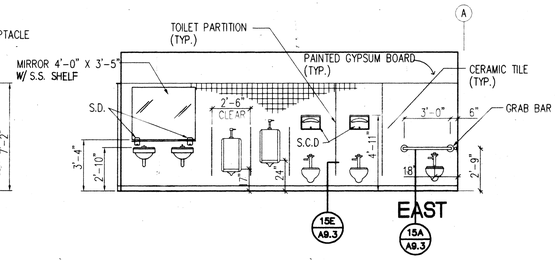

EAST

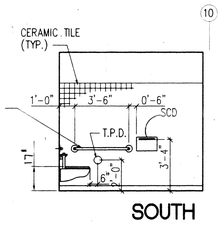

SOUTH

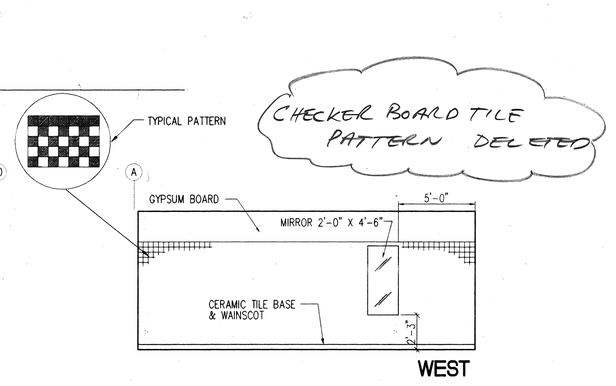

WEST

CHECKER BOARD TILE PATTERN DELETED

RM 102 MEN'S TOILET ROOM

1/4"=1'-0"

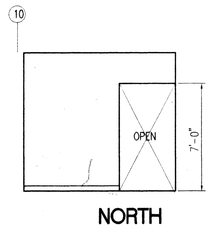

NORTH

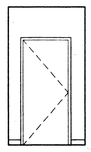

EAST

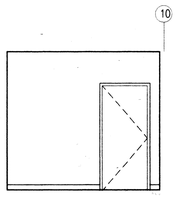

SOUTH



WEST

RM 103 VESTIBULE

1/4"=1'-0"

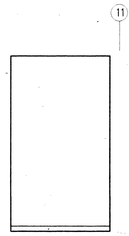

NORTH

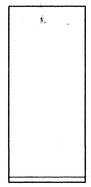

EAST

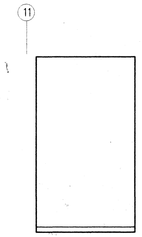

SOUTH

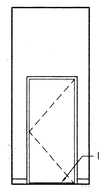

WEST

RM 104 ELEVATOR MACHINE ROOM

1/4"=1'-0"

AS BUILT
CORRECTIONS BY: HAF
CONTRACT NO.
DATE OCT 1 97

ABBREVIATION KEY

G.B. - GRAB BAR
PTD./R/ - PAPER TOWEL DISPENSER\WASTE RECEPTACLE
Q.T. - QUARRY TILE
R.B. - RUBBER BASE
S.C.D. - SEAT COVER DISPENSER
S.D. - SOAP DISPENSER
TYP. - TYPICAL
M.BD. - MARKER BOARD
T.BD. - TACK BOARD
T.P.D. - TOILET PAPER DISPENSER

REVISION	DATE	DESCRIPTION	INITIAL

ISSUE FOR PROGRESS REVIEW	09/18/95
ISSUE FOR PLAN CHECK	O.R.S.10/9/95
ISSUE FOR PERMIT	04/04/96
ISSUE FOR BID	4/4/96
ISSUE FOR CONSTRUCTION	

SEAL:

LICENSED ARCHITECT
RENEL D. CLAMPITT
No. C 25708
REN. 10-31-97
STATE OF CALIFORNIA

CONSULTANT:

INTERACTIVE
RESOURCES
ARCHITECTURE • PLANNING • ENGINEERING
117 PARK PLACE
POINT RICHMOND
CALIFORNIA 94801
(510) 236-7435
(FAX.) 232-5325

PROJECT:

STUDENT UNION

Diablo Valley College
321 Golf Club Road
Pleasant Hill, CA. 94523

Contra Costa Community College District

STAMP:

APPROVED
DSA/OSHPD
MPL 6 4 1 3 9
gw LS GR
4-17-96

APPL. NUMBER:

KEY PLAN:

SHEET TITLE:

INTERIOR ELEVATIONS

SCALE	AS NOTED
PROJ. NO.	A94087.04

PREPARATION AND REVIEW		
PURPOSE	PERSONAL/INITIAL	DATE
DRAWN BY	IRI	09/18/95
PROJ. MGR.	GYN	09/18/95
PEER REVIEW	TKB	04/11/96

SHEET NUMBER:

A 5.1

NUMBER: OF:

L:\A\94087.04\CAD\A5-1.DWG

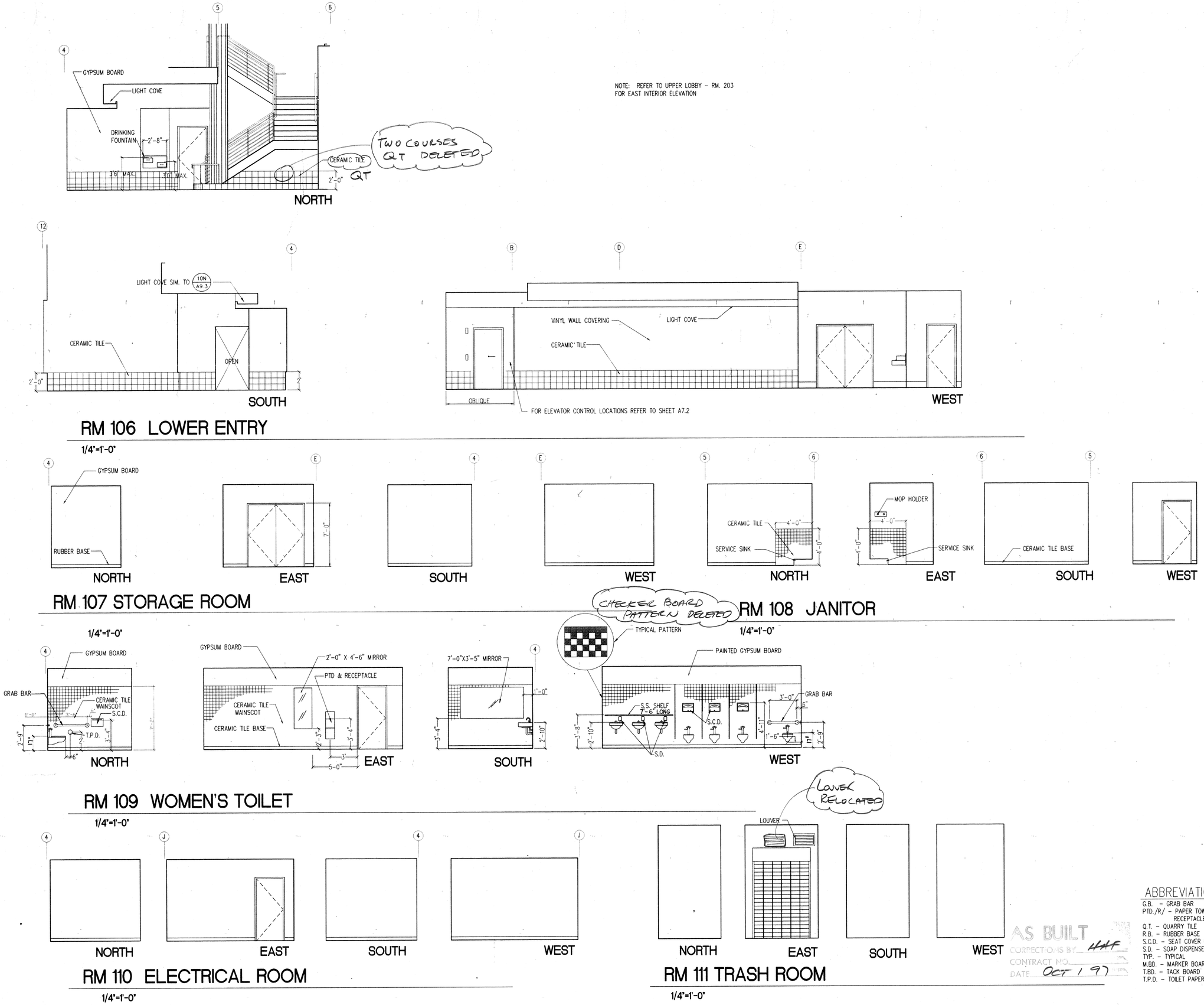

AS BUILT
CORRECTIONS BY HAF
CONTRACT NO.
DATE OCT 1 97

ABBREVIATION KEY

G.B. - GRAB BAR
PTD./R/ - PAPER TOWEL DISPENSER/WASTE RECEPTACLE
Q.T. - QUARRY TILE
R.B. - RUBBER BASE
S.C.D. - SEAT COVER DISPENSER
S.D. - SOAP DISPENSER
TYP. - TYPICAL
M.BD. - MARKER BOARD
T.BD. - TACK BOARD
T.P.D. - TOILET PAPER DISPENSER

REVISION	DATE	DESCRIPTION	INITIAL

ISSUE FOR PROGRESS REVIEW	09/18/95
ISSUE FOR PLAN CHECK	O.R.S.10/9/95
ISSUE FOR PERMIT	04/04/96
ISSUE FOR BID	4/4/96
ISSUE FOR CONSTRUCTION	

SEAL:

LICENSED ARCHITECT PAUL D. CIANFICHI No. C 14395 Exp. 10-31-97 STATE OF CALIFORNIA

CONSULTANT:

INTERACTIVE RESOURCES
ARCHITECTURE • PLANNING • ENGINEERING
117 PARK PLACE
POINT RICHMOND
CALIFORNIA 94801
(510) 236-7435
(FAX.) 232-5325

PROJECT:

STUDENT UNION

Diablo Valley College
321 Golf Club Road
Pleasant Hill, CA. 94523

Contra Costa Community College District

STAMP:

APPL. NUMBER:

KEY PLAN:

SHEET TITLE:

INTERIOR ELEVATIONS

SCALE	
PROJ. NO.	AS46[illegible]

PREPARATION AND REVIEW

PURPOSE	PERSONAL/INITIAL	DATE
DRAWN BY	IRI	09/18/95
PROJ. MGR.	GYN	09/18/95
PEER REVIEW	TKB	04/11/96

SHEET NUMBER:

A
5.2

NUMBER: OF:

L:\A\94087.04\CAD\A5-2.DWG

23

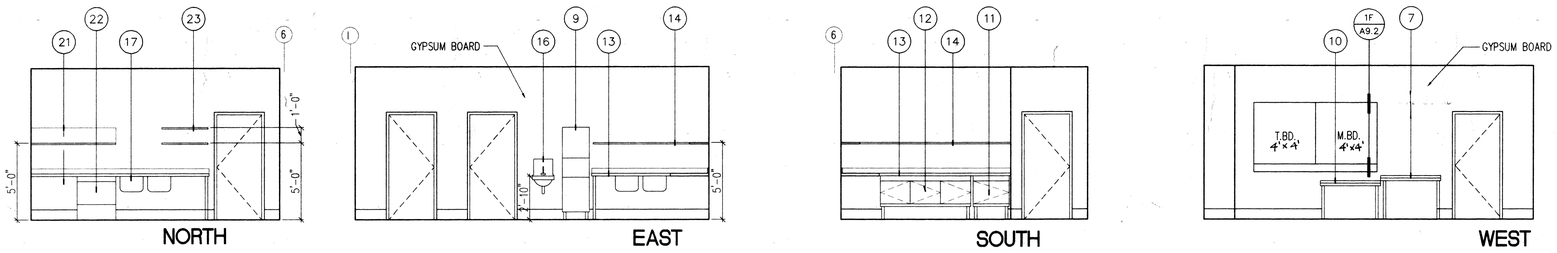

RM. 112 CLASSROOM / KITCHEN (SEE SHT. FS-2 FOR KITCHEN EQUIPMENT SCHEDULE)

1/4"= 1'-0"

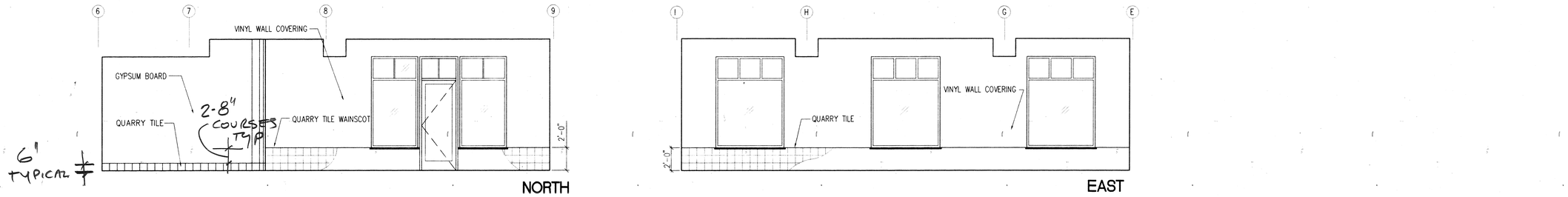

RM. 114 DINING ROOM/RM. 113 SERVICE COUNTER

1/4"= 1'-0"

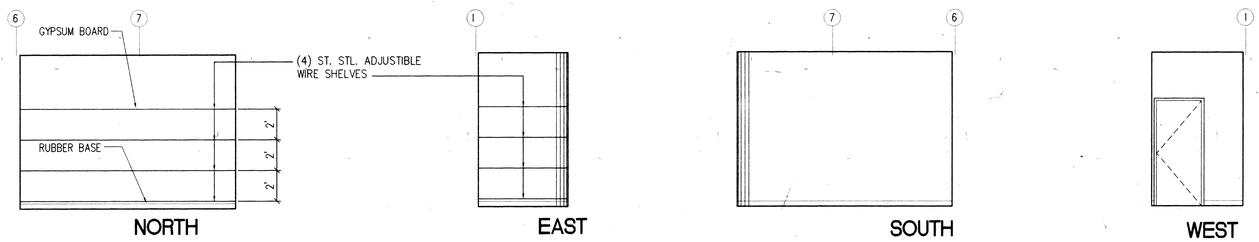

RM 115 KITCHEN STORAGE ROOM

1/4"=1'-0"

AS BUILT
CORRECTIONS BY HHF
CONTRACT NO.
DATE OCT / 97

REVISION	DATE	DESCRIPTION	INITIAL

ISSUE FOR PROGRESS REVIEW	09/18/95
ISSUE FOR PLAN CHECK	O.R.S.10/9/95
ISSUE FOR PERMIT	04/04/96
ISSUE FOR BID	4/24/96
ISSUE FOR CONSTRUCTION	

SEAL:

LICENSED ARCHITECT
RAUL S. CIANCIOLO
No. C 13739
REN. 10-31-97
STATE OF CALIFORNIA

CONSULTANT:

INTERACTIVE
RESOURCES
ARCHITECTURE • PLANNING • ENGINEERING
117 PARK PLACE
POINT RICHMOND
CALIFORNIA 94801
(510) 236-7435
(FAX.) 232-5325

PROJECT:

STUDENT UNION

Diablo Valley College
321 Golf Club Road
Pleasant Hill, CA. 94523

Contra Costa Community College District

STAMP:

APPL. NUMBER:

KEY PLAN:

SHEET TITLE:

SCALE	
PROJ. NO.	A94087.04

PREPARATION AND REVIEW		
PURPOSE	PERSONAL/INITIAL	DATE
DRAWN BY	IRI	09/18/95
PROJ. MGR.	GYN	09/18/95
PEER REVIEW	TKB	04/11/96

SHEET NUMBER:

A
5.3

NUMBER: OF:

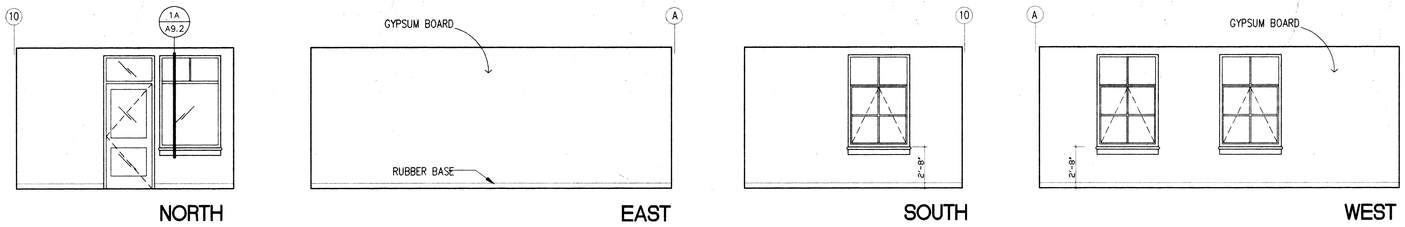

RM 201 COMPUTER ROOM

1/4"=1'-0"

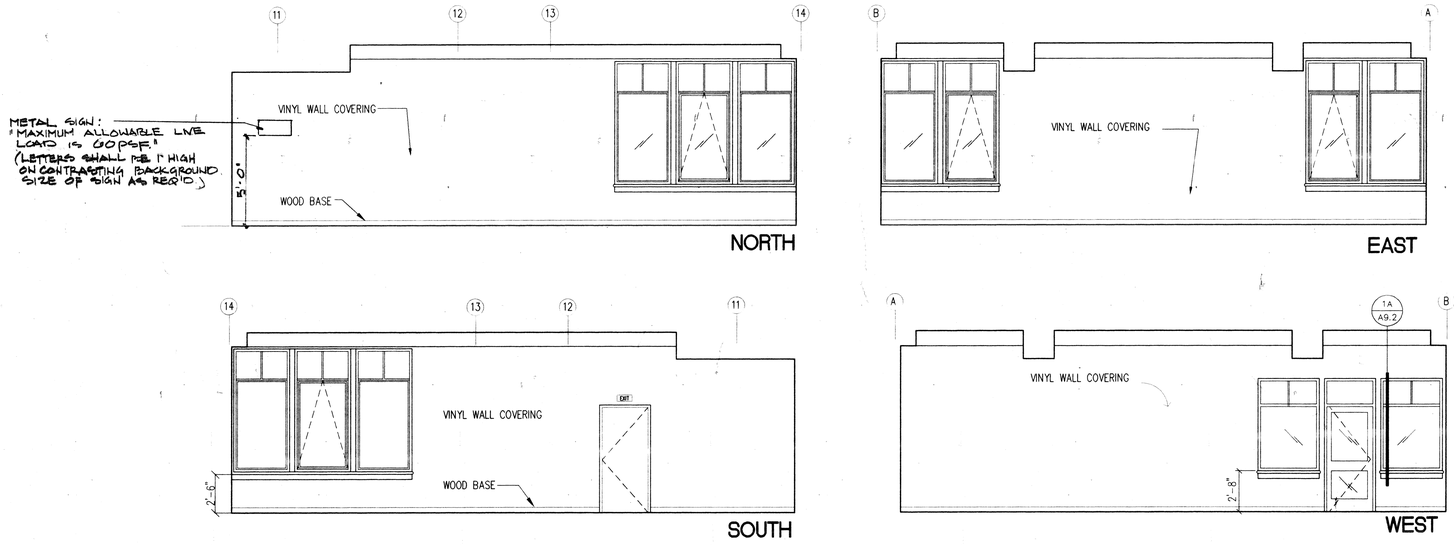

RM 202 QUIET ROOM

1/4"=1'-0"

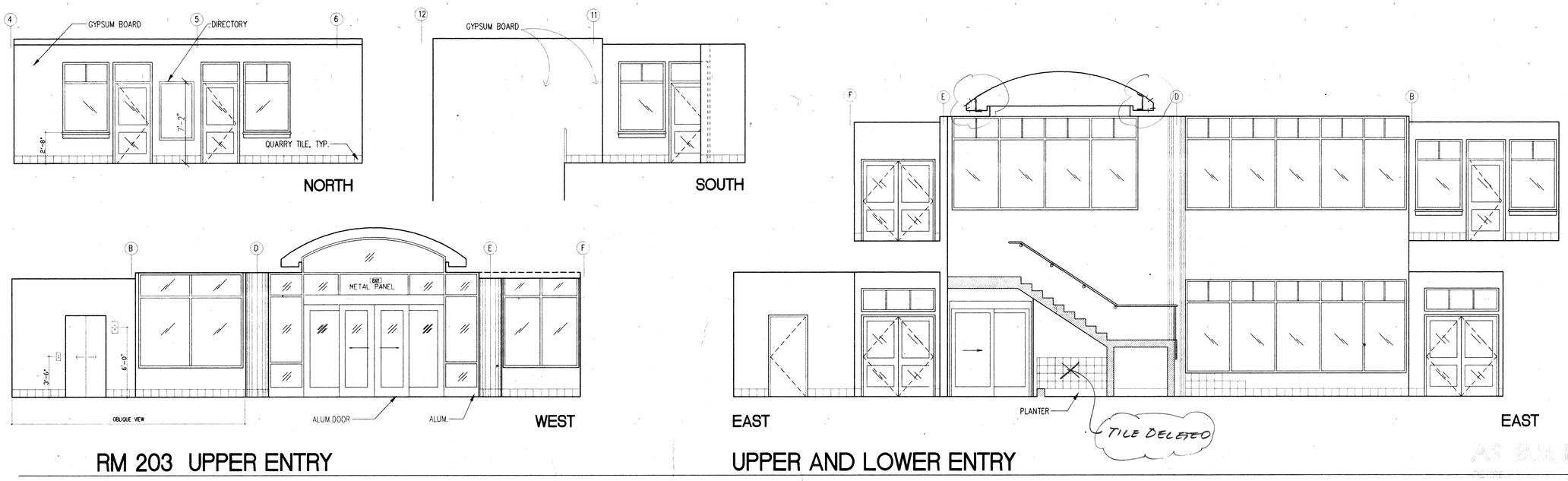

RM 203 UPPER ENTRY

1/4"=1'-0"

UPPER AND LOWER ENTRY

AS BUILT
CONTRACT NO. HAF
DATE OCT 1 97

REVISION	DATE	DESCRIPTION	INITIAL

ISSUE FOR PROGRESS REVIEW	09/18/95
ISSUE FOR PLAN CHECK	O.R.S.10/9/95
ISSUE FOR PERMIT	04/04/96
ISSUE FOR BID	4/4/96
ISSUE FOR CONSTRUCTION	

SEAL:

LICENSED ARCHITECT
STATE OF CALIFORNIA

CONSULTANT:

INTERACTIVE RESOURCES

ARCHITECTURE • PLANNING • ENGINEERING

117 PARK PLACE
POINT RICHMOND
CALIFORNIA 94801
(510) 236-7435
(FAX.) 232-5325

PROJECT:

STUDENT UNION

Diablo Valley College
321 Golf Club Road
Pleasant Hill, CA. 94523

Contra Costa Community College District

STAMP:

APPL 6 41 3 9
4-17-96

APPL. NUMBER:

KEY PLAN:

SHEET TITLE:

INTERIOR ELEVATIONS

SCALE	
PROJ. NO.	A94087204

PREPARATION AND REVIEW

PURPOSE	PERSONAL/INITIAL	DATE
DRAWN BY	IRI	09/18/95
PROJ. MGR.	GYN	09/18/95
PEER REVIEW	TKB	04/11/96

SHEET NUMBER:

A
5.4

NUMBER: OF:

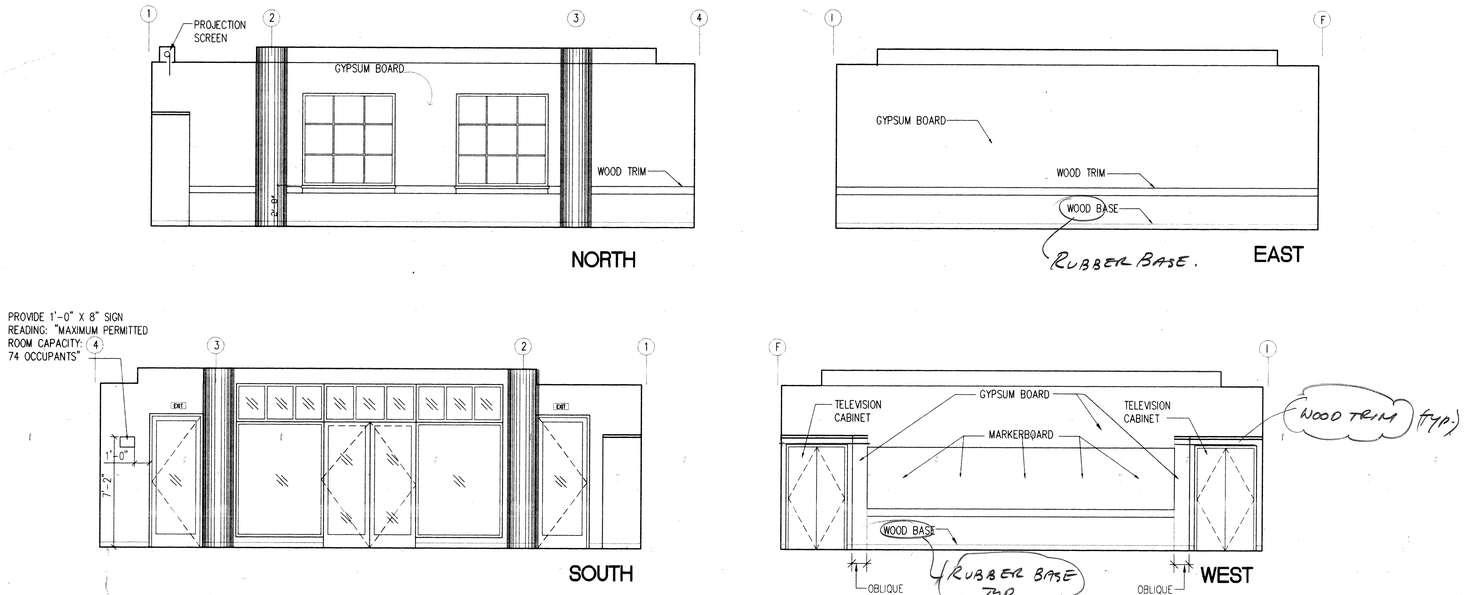

RM 204 CONFERENCE ROOM

1/4"=1'-0"

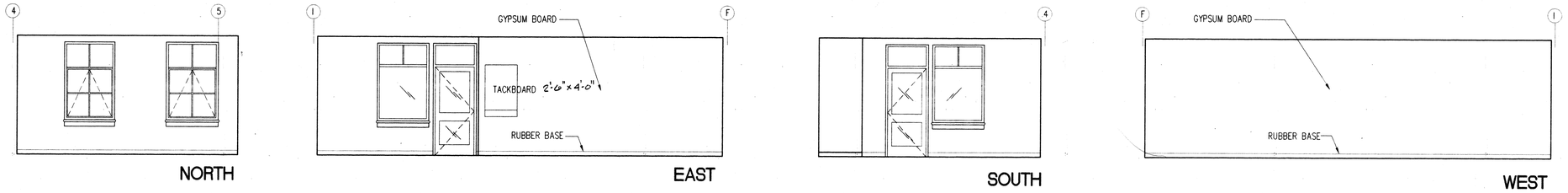

RM 205 OFFICE

1/4"=1'-0"

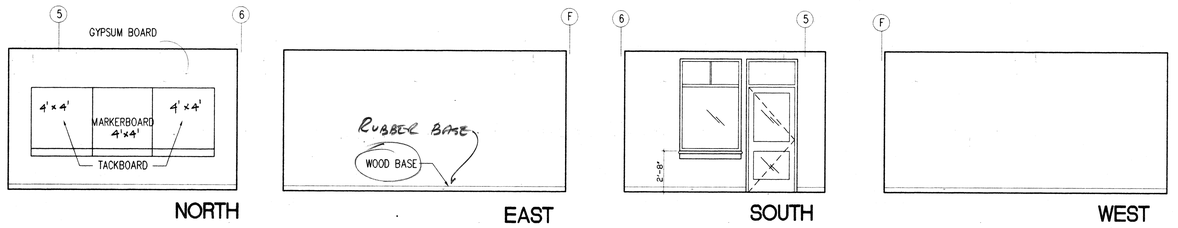

RM 206 ASDVC

1/4"=1'-0"

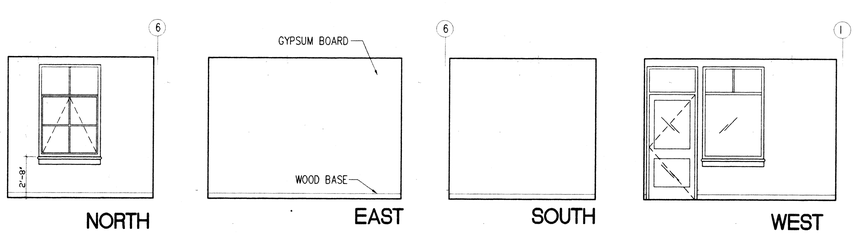

RM 207 ADVISOR'S OFFICE

1/4"=1'-0"

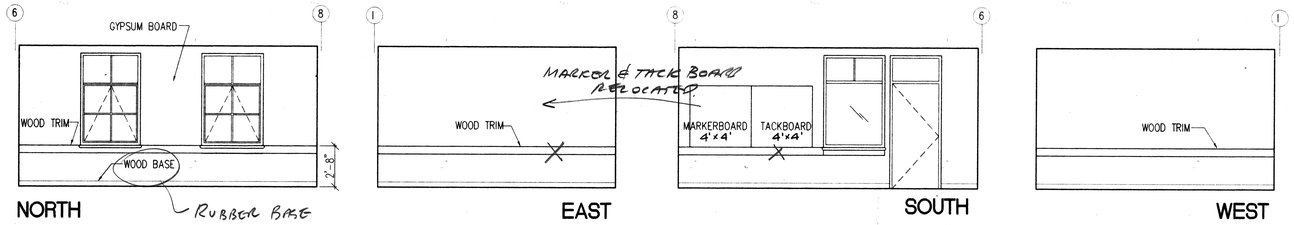

RM 208 WORKROOM (CHANGED TO CLUB OFFICE)

1/4"=1'-0"

HAF
OCT 1 97

REVISION	DATE	DESCRIPTION	INITIAL

ISSUE FOR PROGRESS REVIEW	09/18/95
ISSUE FOR PLAN CHECK	O.R.S.10/9/95
ISSUE FOR PERMIT	04/04/96
ISSUE FOR BID	4/4/96
ISSUE FOR CONSTRUCTION	

SEAL:

LICENSED ARCHITECT
PAUL D. CIANFICHI
No. C 23260
REN. 10-31-97
STATE OF CALIFORNIA

CONSULTANT:

INTERACTIVE RESOURCES

ARCHITECTURE • PLANNING • ENGINEERING

117 PARK PLACE
POINT RICHMOND
CALIFORNIA 94801
(510) 236-7435
(FAX.) 232-5325

PROJECT:

STUDENT UNION

Diablo Valley College
321 Golf Club Road
Pleasant Hill, CA. 94523

Contra Costa Community College District

STAMP:

APPL. NUMBER:

KEY PLAN:

SHEET TITLE:

INTERIOR ELEVATIONS

SCALE	
PROJ. NO.	AS4687.04

PREPARATION AND REVIEW

PURPOSE	PERSONAL/INITIAL	DATE
DRAWN BY	IRI	09/18/95
PROJ. MGR.	GYN	09/18/95
PEER REVIEW	TKB	04/11/96

SHEET NUMBER:

A
5.5

NUMBER: OF:

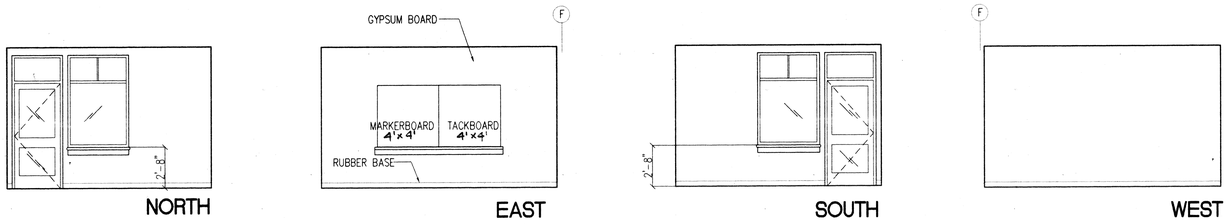

RM 209 OFFICE 2

1/4"=1'-0"

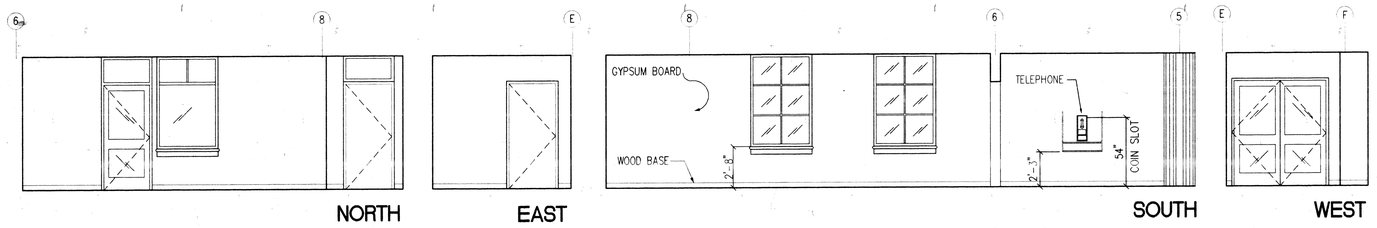

RM 210 CORRIDOR

1/4"=1'-0"

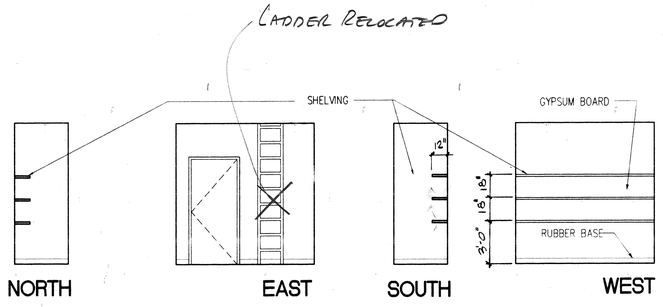

RM 211 CLOSET

1/4"=1'-0"

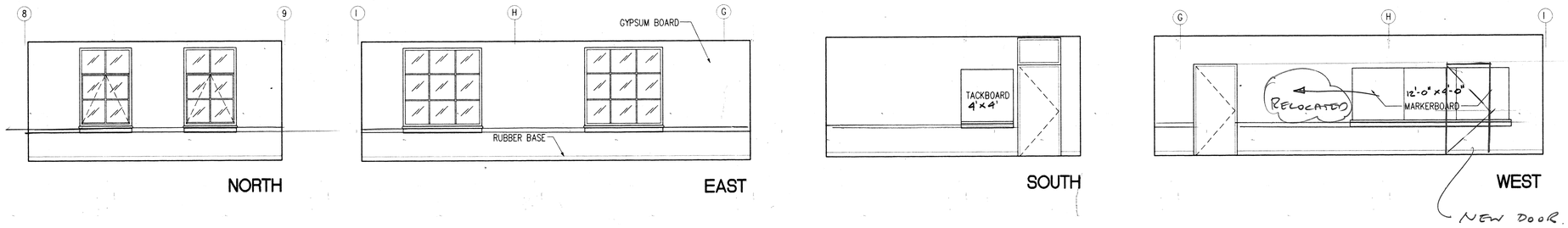

RM 212 CLUB ROOM (CHANGED TO WORK ROOM)

1/4"=1'-0"

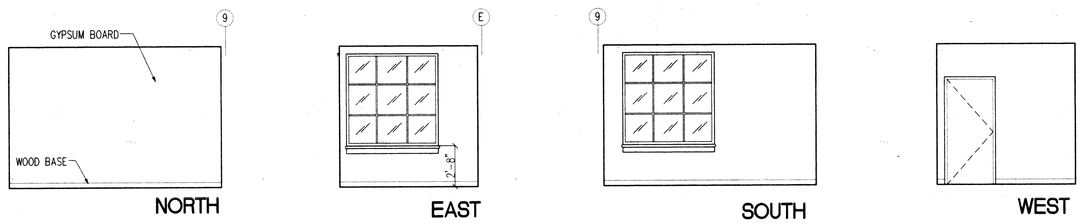

RM 213 PRESIDENT'S OFFICE

1/4"=1'-0"

HAF

OUT 1 97

REVISION	DATE	DESCRIPTION	INITIAL

ISSUE FOR PROGRESS REVIEW	09/18/95
ISSUE FOR PLAN CHECK	O.R.S.10/9/95
ISSUE FOR PERMIT	04/04/96
ISSUE FOR BID	4/4/96
ISSUE FOR CONSTRUCTION	

SEAL:

LICENSED ARCHITECT
PAUL D. CIANFICHI
No. 23101
REN. 10-31-97
STATE OF CALIFORNIA

CONSULTANT:

INTERACTIVE RESOURCES

ARCHITECTURE • PLANNING • ENGINEERING

117 PARK PLACE
POINT RICHMOND
CALIFORNIA 94801
(510) 236-7435
(FAX.) 232-5325

PROJECT:

STUDENT UNION

Diablo Valley College
321 Golf Club Road
Pleasant Hill, CA. 94523

Contra Costa Community College District

STAMP:

APPL 6 4 1 3 9
GR
4-17-96

APPL. NUMBER:

KEY PLAN:

SHEET TITLE:

INTERIOR ELEVATIONS

SCALE	
PROJ. NO.	A94087.04

PREPARATION AND REVIEW

PURPOSE	PERSONAL/INITIAL	DATE
DRAWN BY	IRI	09/18/95
PROJ. MGR.	GYN	09/18/95
PEER REVIEW	TKB	04/11/96

SHEET NUMBER:

A
5.6

NUMBER: OF:

L:\A\94087.04\CAD\A5-2.DWG

27

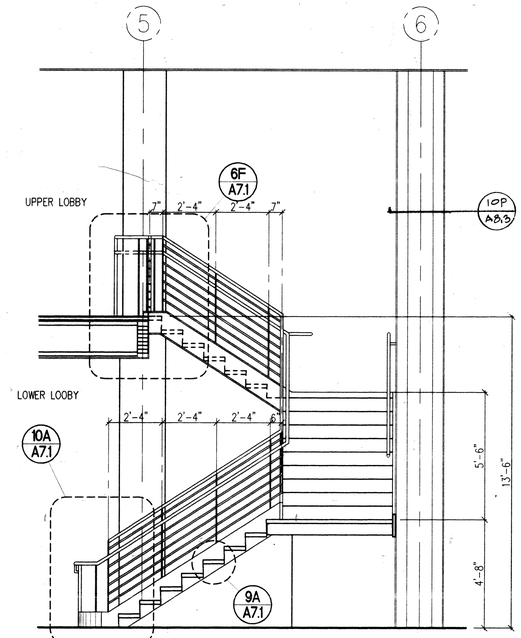

1M	LOBBY STAIR SECTION
3/8" = 1' - 0"	REF: A7.1

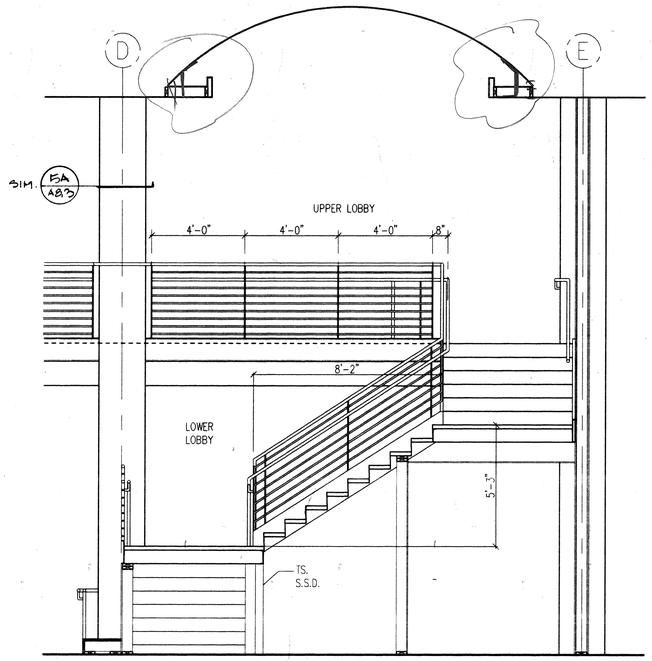

2M	LOBBY STAIR SECTION
3/8" = 1' - 0"	REF: A7.1

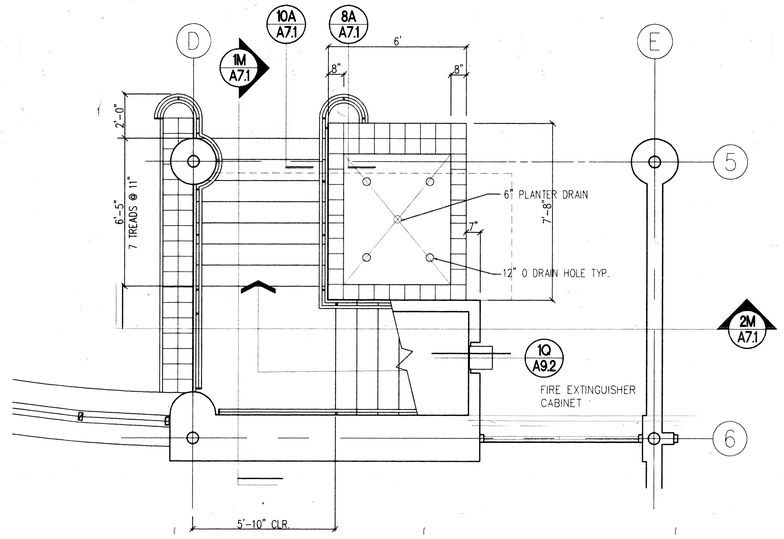

3N	FIRST FLOOR LOBBY STAIR PLAN
3/8" = 1' - 0"	REF: A7.1

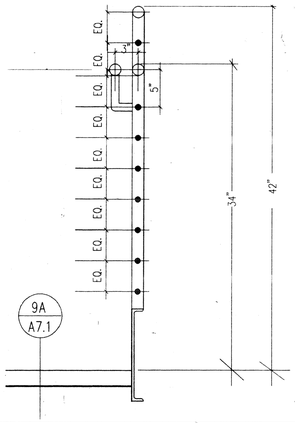

4F	HANDRAIL SECTION
1-1/2" = 1' - 0"	REF: A7.1

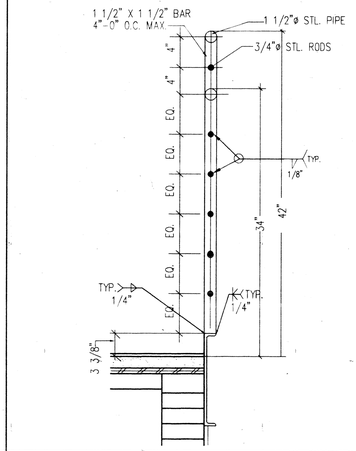

5F	GUARDRAIL SECTION
1-1/2" = 1' - 0"	REF: A7.1

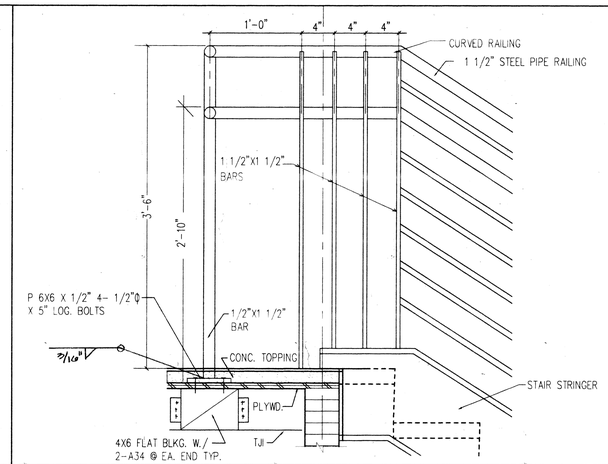

6F	UPPER LANDING ELEVATION
1-1/2" = 1' - 0"	REF

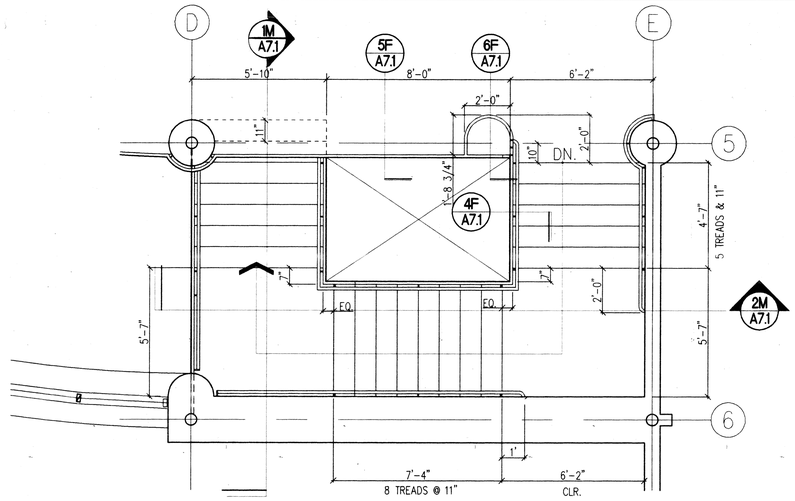

7F	SECOND FLOOR LOBBY STAIR PLAN
3/8" = 1' - 0"	REF: A7.1

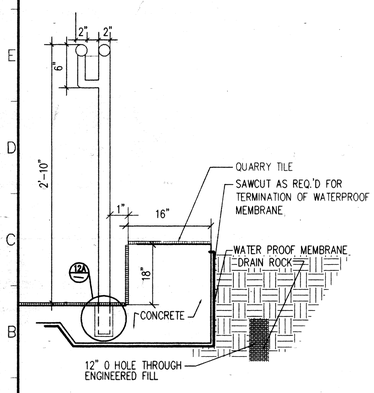

8A	RAIL SECTION • PLANTER
1-1/2" = 1' - 0"	REF: A7.1

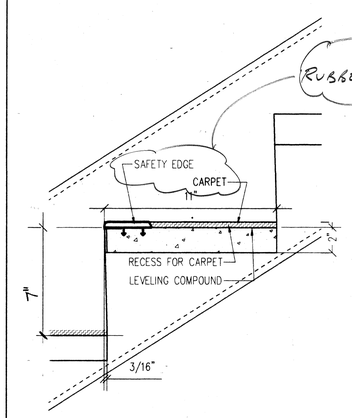

9A	TREAD AND RISER DETAILS
1-1/2" = 1'	REF: A7.1

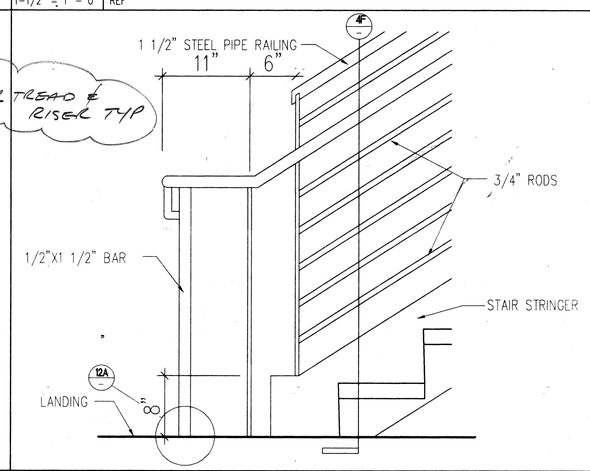

10A	LOWER LANDING ELEVATION
1-1/2" = 1' - 0"	REF A7.1

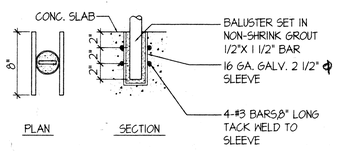

12A	RAILING ANCHORAGE
NOT TO SCALE	REF:

AS BUILT
HAF
OCT 1 97

REVISION	DATE	DESCRIPTION	INITIAL
ISSUE FOR PROGRESS REVIEW	09/18/95		
ISSUE FOR PLAN CHECK	O.R.S.10/9/95		
ISSUE FOR PERMIT	04/04/96		
ISSUE FOR BID	4/4/96		
ISSUE FOR CONSTRUCTION			

SEAL:

LICENSED ARCHITECT
PAUL D. CRAWFORD
No. C-22005
REN. 10-31-97
STATE OF CALIFORNIA

CONSULTANT:

INTERACTIVE
RESOURCES
ARCHITECTURE • PLANNING • ENGINEERING
117 PARK PLACE
POINT RICHMOND
CALIFORNIA 94801
(510) 236-7435
(FAX.) 232-5325

PROJECT:

STUDENT UNION

Diablo Valley College
321 Golf Club Road
Pleasant Hill, CA. 94523

Contra Costa
Community College District

STAMP:

APPROVED AS TO FORM
OFFICE OF REGIONAL ACCESS
APPL 6 41 39
4-17-96

APPL. NUMBER:

KEY PLAN:

SHEET TITLE:

STAIR + RAIL DETAILS

SCALE	
PROJ. NO.	A94087.04

PREPARATION AND REVIEW

PURPOSE	PERSONAL/INITIAL	DATE
DRAWN BY	IRI	09/18/95
PROJ. MGR.	GYN	09/18/95
PEER REVIEW	TKB	04/11/96

SHEET NUMBER:

A 7.1

NUMBER: AS NOTED

L:\A\94087\04\CAD\A7-12.DWG

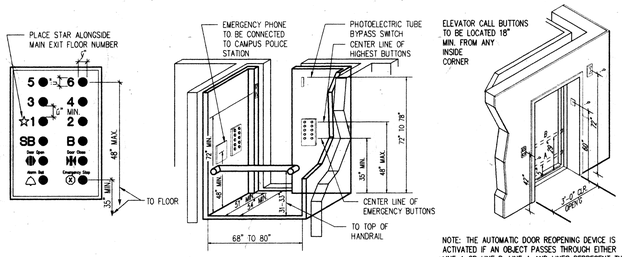

NOTE: THE AUTOMATIC DOOR REOPENING DEVICE IS ACTIVATED IF AN OBJECT PASSES THROUGH EITHER LINE A OR LINE B. LINE A AND LINES REPRESENT THE VERTICAL LOCATIONS OF THE DOOR REOPENING DEVICE NOT REQUIRING CONTACT.

5R	CONTROL PANEL / INTERIOR CAB. EQUIPMENT
N.T.S.	REF: (ELEVDET1)

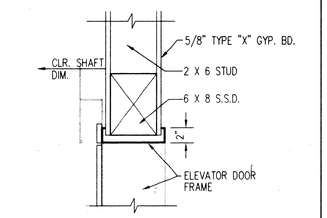

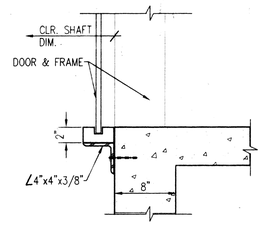

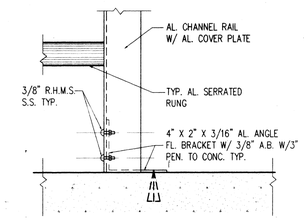

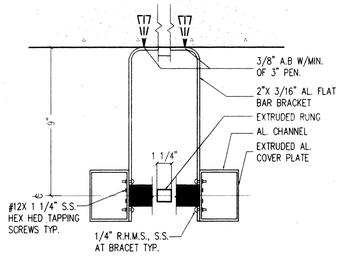

6J	ELEVATOR DOOR DETAIL	7J	LADDER DET. • ELEVATOR PIT
1 1/2" = 1'-0"	REF: (ELEVDET2)	NOT TO SCALE	REF: (7-2DET1.DWG)

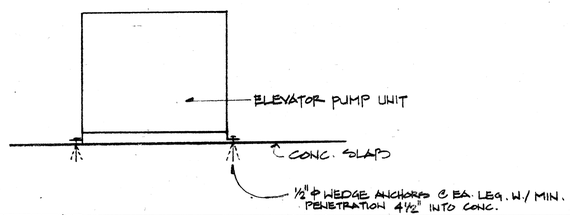

1A	ELEVATOR PUMP UNIT ANCHORAGE
N.T.S.	

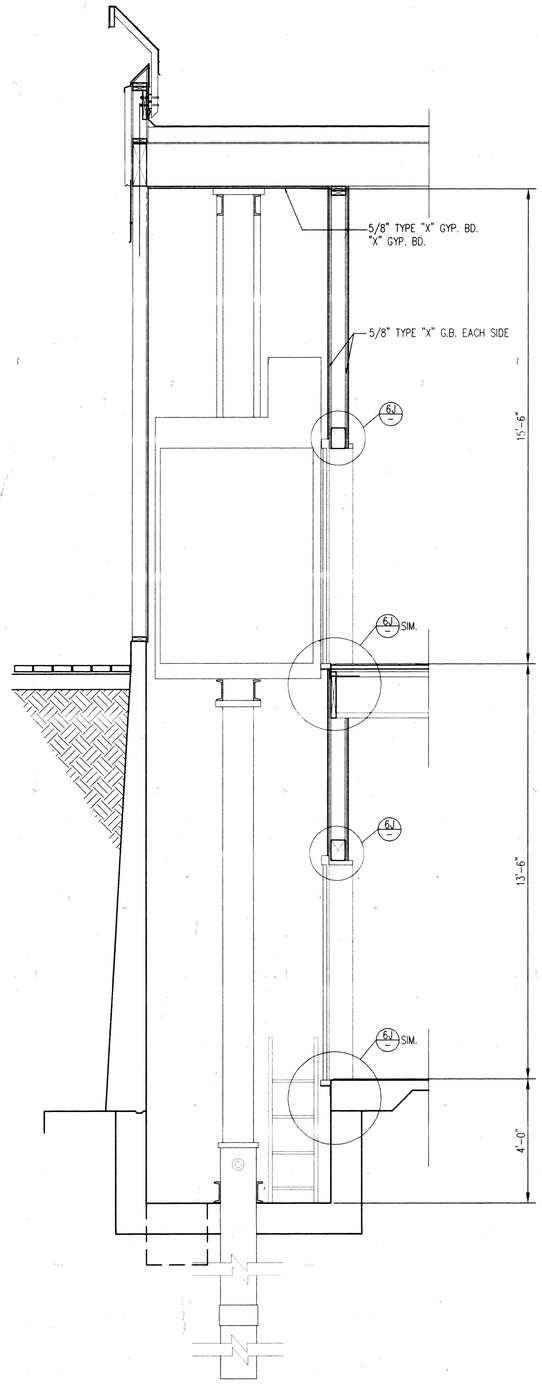

4A	ELEVATOR SECTION
1 1/2" = 1'-0"	REF: (ELEVDET2)

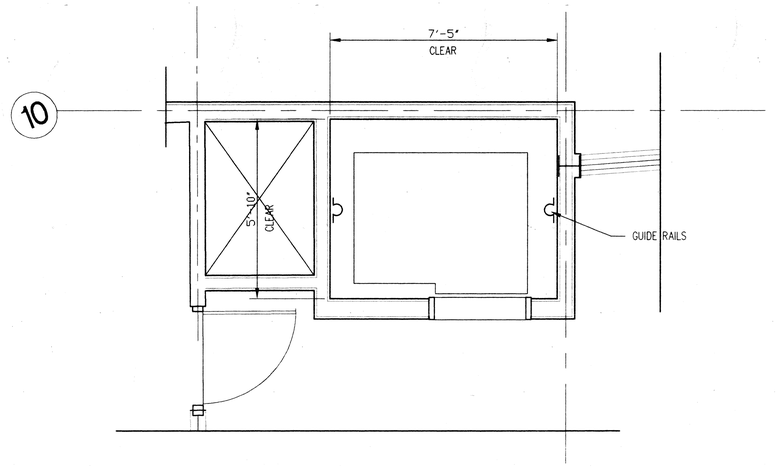

1N	ELEVATOR ENLARGE PLAN 2ND. FLOOR
1 1/2" = 1'-0"	REF: (ELEVPLAN)

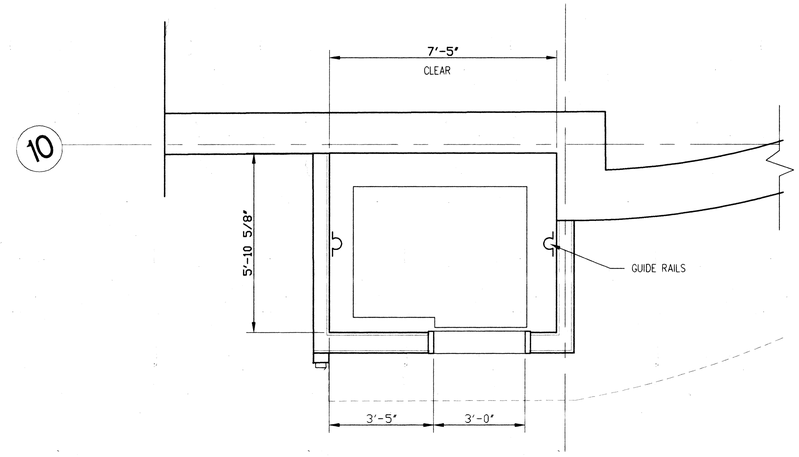

2G	ELEVATOR ENLARGE PLAN 1ST. FLOOR
1 1/2" = 1'-0"	REF: (ELEVPLAN1)

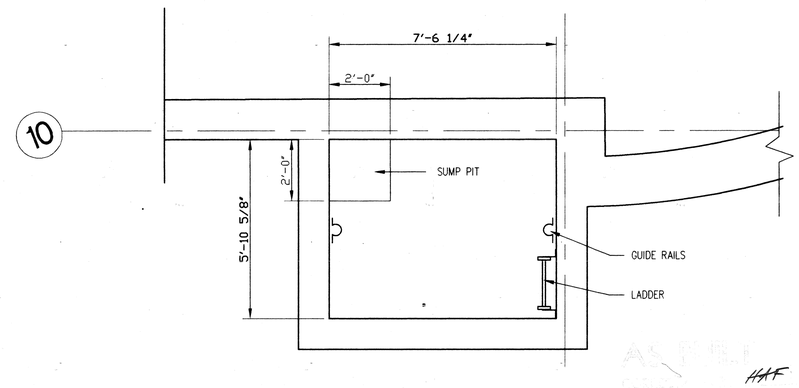

3A	ELEVATOR ENLARGE PIT PLAN
1 1/2" = 1'-0"	REF: (ELEVPLAN1)

HAF

Oct 1 97

REVISION	DATE	DESCRIPTION	INITIAL

ISSUE FOR PROGRESS REVIEW	09/18/95
ISSUE FOR PLAN CHECK	O.R.S.10/9/95
ISSUE FOR PERMIT	04/04/96
ISSUE FOR BID	4/26/96
ISSUE FOR CONSTRUCTION	

SEAL:

LICENSED ARCHITECT — JULIE D. CRAWFORD — C 20600 — REN. 10-31-97 — STATE OF CALIFORNIA

CONSULTANT:

INTERACTIVE RESOURCES

ARCHITECTURE • PLANNING • ENGINEERING

117 PARK PLACE
POINT RICHMOND
CALIFORNIA 94801
(510) 236-7435
(FAX.) 232-5325

PROJECT:

STUDENT UNION

Diablo Valley College
321 Golf Club Road
Pleasant Hill, CA. 94523

Contra Costa Community College District

STAMP:

ISSUANCE OF THIS STAMP DOES NOT CONSTITUTE APPROVAL BY THE STATE ARCHITECT OF THE ARCHITECT'S OR ENGINEER'S DESIGNS
APPL 6 41 39
LD GR
4-17-96

APPL. NUMBER:

KEY PLAN:

SHEET TITLE:

ELEVATOR PLANS SECTIONS DETAILS

SCALE	AS NOTED
PROJ. NO.	A94087.04

PREPARATION AND REVIEW		
PURPOSE	PERSONAL/INITIAL	DATE
DRAWN BY	IRI	09/18/95
PROJ. MGR.	GYN	09/18/95
PEER REVIEW	TKB	04/11/96

SHEET NUMBER:

A 7.2

NUMBER: OF:

L:\A\94087.04\CAD\A2-7.DWG

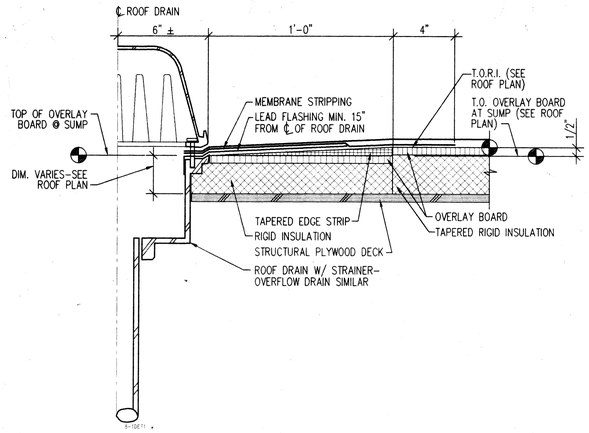

1N	ROOF DRAIN WITH TAPERED SUMP
3" =1'-0"	REF:

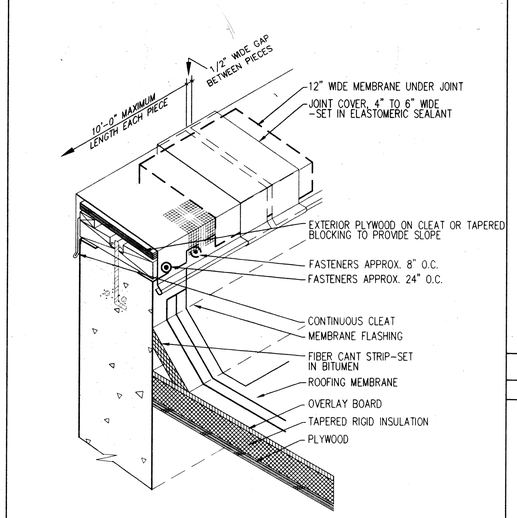

6N	LIGHT METAL PARAPET CAP
ISOMETRIC	REF:

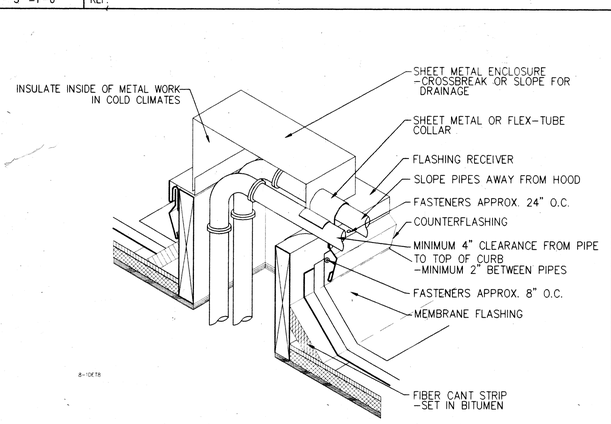

1G	MULTIPLE PIPE PENETRATION
ISOMETRIC	REF:

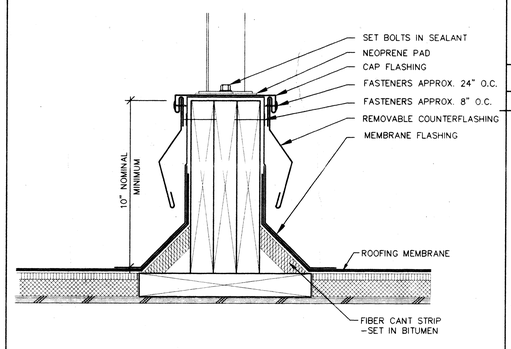

6G	MECHANICAL EQUIPMENT SUPPORT
NOT TO SCALE	REF:

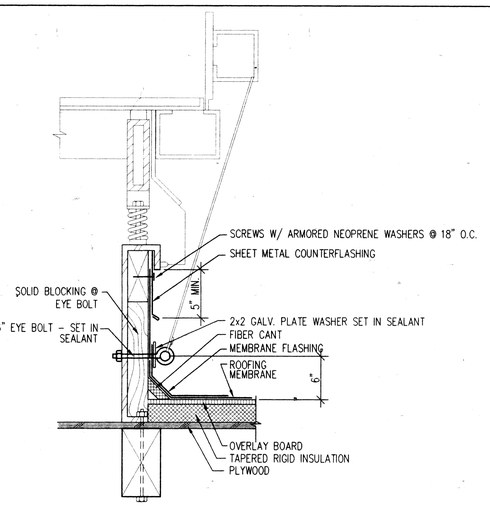

1A	AC - 4, 6 AND 7 CURB
NOT TO SCALE	REF:

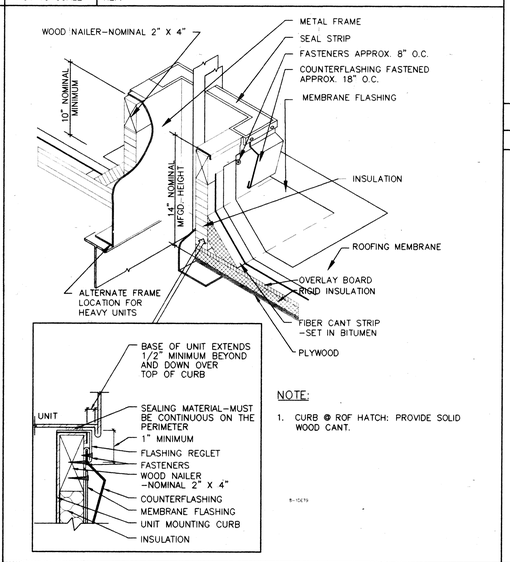

NOTE:
1. CURB @ ROF HATCH: PROVIDE SOLID WOOD CANT.

6A	EXHAUST FAN CURB
ISOMETRIC	REF:

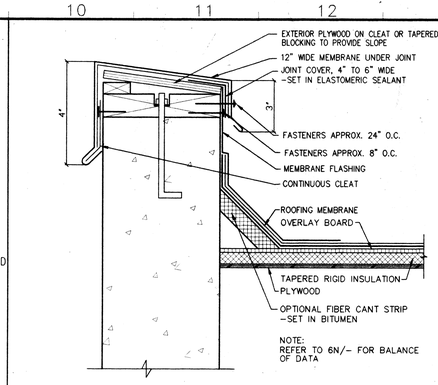

10R	LIGHT METAL PARAPET CAP
NOT TO SCALE	REF:

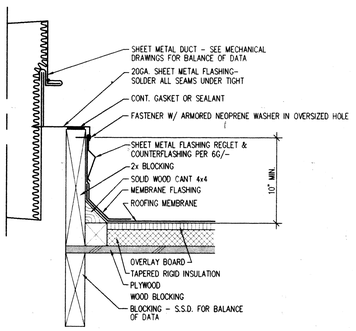

10L	DUCT PENETRATION
NOT TO SCALE	REF:

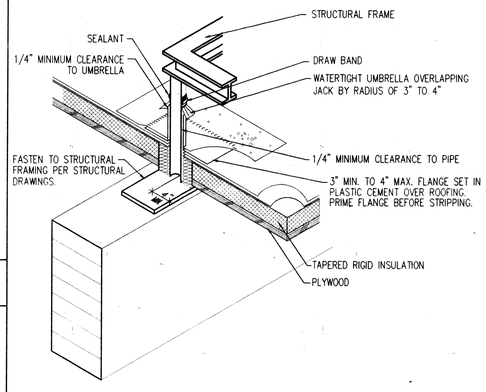

10F	PIPE • MECH. EQUIPMENT PLATFORM
ISOMETRIC	REF:

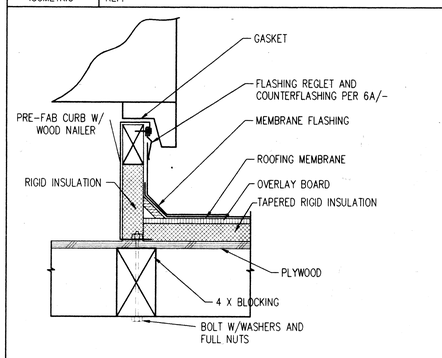

10A	AC-1, 2, 3 AND 5 CURB
NOT TO SCALE	REF:

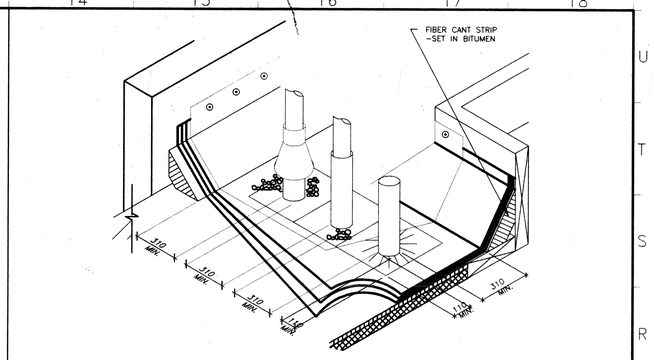

14R	PIPE CLEARANCES
ISOMETRIC	REF:

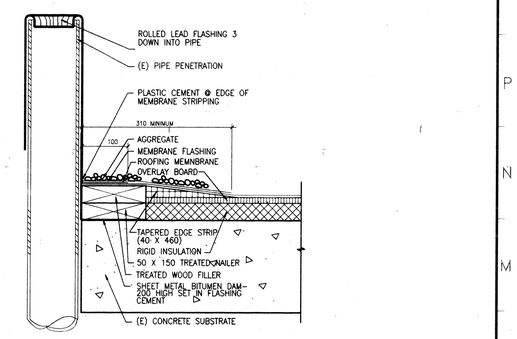

14L	TYP. VENT PIPE PENETRATION
3" = 1'-0"	REF:

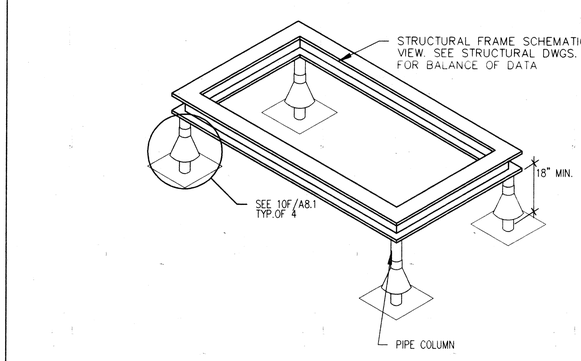

14F	MECHANICAL EQUIPMENT PLATFORM
ISOMETRIC	REF:

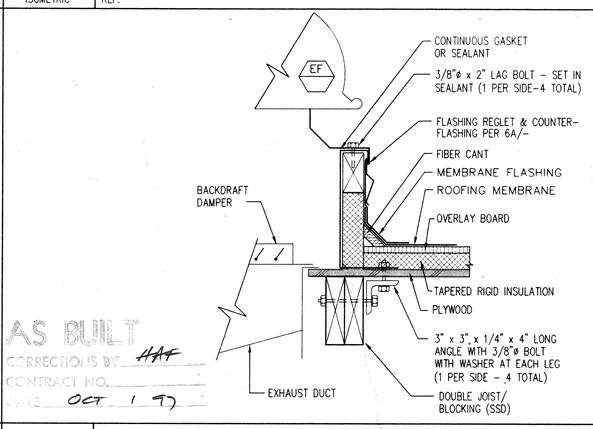

AS BUILT
CORRECTIONS BY HAF
CONTRACT NO.
DATE OCT 1 97

14A	EF 3 AND 4 CURB
NOT TO SCALE	REF:

REVISION	DATE	DESCRIPTION	INITIAL

ISSUE FOR PROGRESS REVIEW	09/18/95
ISSUE FOR PLAN CHECK	O.R.S.10/9/95
ISSUE FOR PERMIT	04/04/96
ISSUE FOR BID	4/9/96
ISSUE FOR CONSTRUCTION	

SEAL:

LICENSED ARCHITECT
ANN D. CIANFONI
No. C-23270
REN. 10-31-97
STATE OF CALIFORNIA

CONSULTANT:

INTERACTIVE RESOURCES
ARCHITECTURE • PLANNING • ENGINEERING
117 PARK PLACE
POINT RICHMOND
CALIFORNIA 94801
(510) 236-7435
(FAX) 232-5325

PROJECT:

STUDENT UNION

Diablo Valley College
321 Golf Club Road
Pleasant Hill, CA. 94523

Contra Costa Community College District

STAMP:

APPL. NUMBER:

KEY PLAN:

SHEET TITLE:

ROOF DETAILS

SCALE	
PROJ. NO.	A94087.04

PREPARATION AND REVIEW		
PURPOSE	PERSONAL/INITIAL	DATE
DRAWN BY	IRI	09/18/95
PROJ. MGR.	GYN	09/18/95
PEER REVIEW	TKB	04/11/96

SHEET NUMBER:

A 8.1

NUMBER: OF:

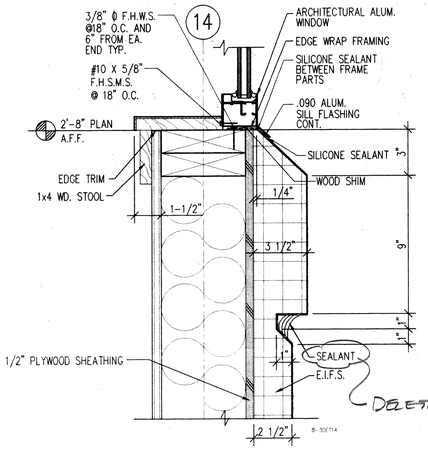

1P	TYPICAL SECOND FLOOR SILL
3" = 1'-0"	REF: (8-3NEW14)

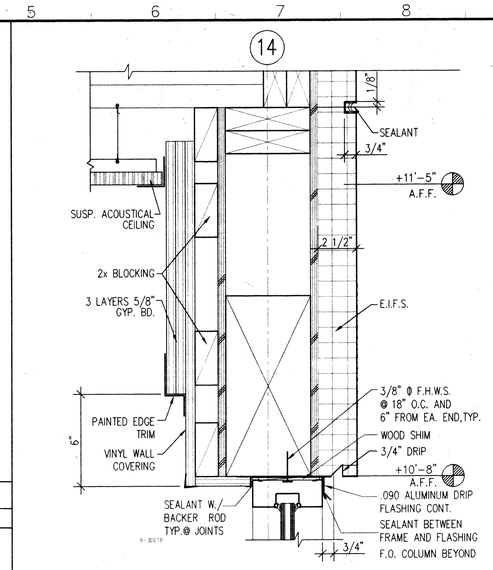

5N	1ST. FLOOR HEAD 3/4" • REC. RM.
3" = 1'-0"	REF: (8-3NEW8)

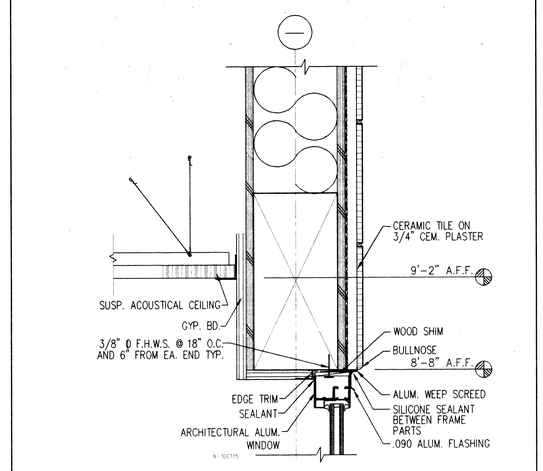

9P	TYP. 2ND. FLOOR HEAD (JAMB SIM.)
3" = 1'-0"	REF: (8-3NEW15)(8-3NEW4)

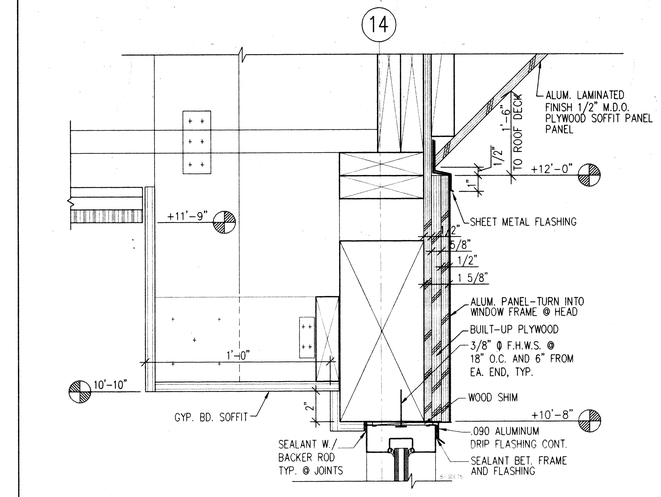

13P	2ND. FLOOR QUIET RM. WINDOW HEAD
3" = 1'-0"	REF: (8-3NEW5)

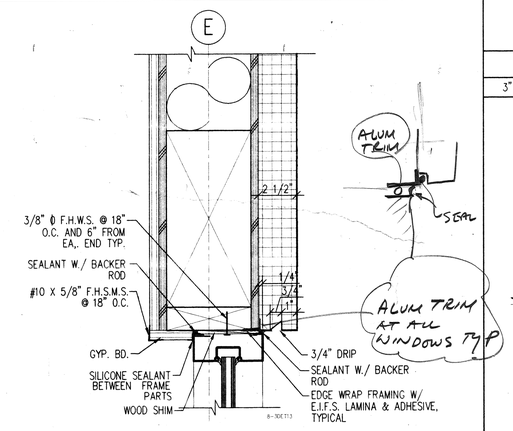

1J	1ST. FLOOR DINING ROOM HEAD (SILL SIM.)
3" = 1'-0"	REF: (8-3NEW13)

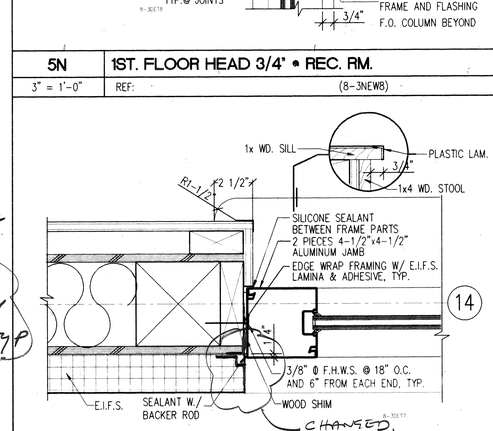

5J	1ST. FLOOR REC. RM. JAMB
3" = 1'-0"	REF: (8-3NEW7)

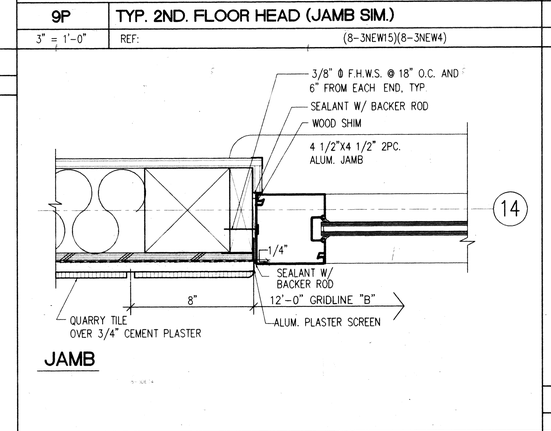

9J	2ND. FLOOR QUIET ROOM JAMB
3" = 1'-0"	REF: (8-3NEW4)

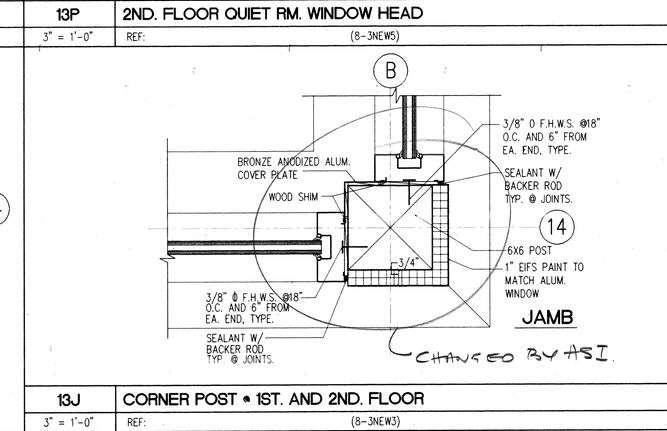

13J	CORNER POST • 1ST. AND 2ND. FLOOR
3" = 1'-0"	REF: (8-3NEW3)

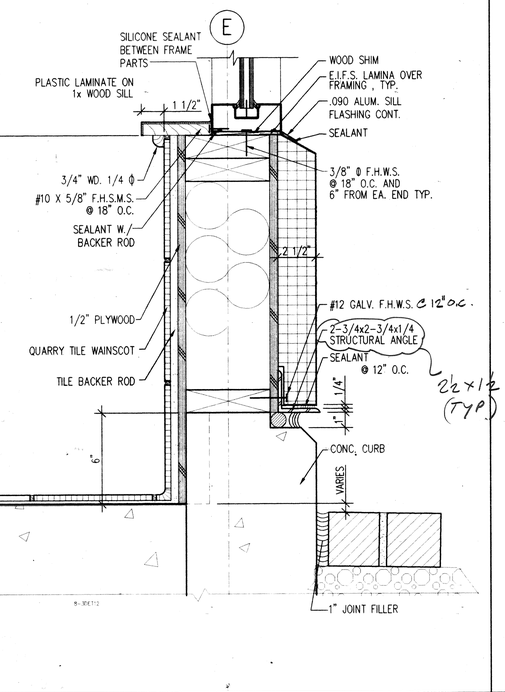

1A	1ST. FLOOR DINING RM. STILL
3" = 1'-0"	REF: (8-3NEW12)

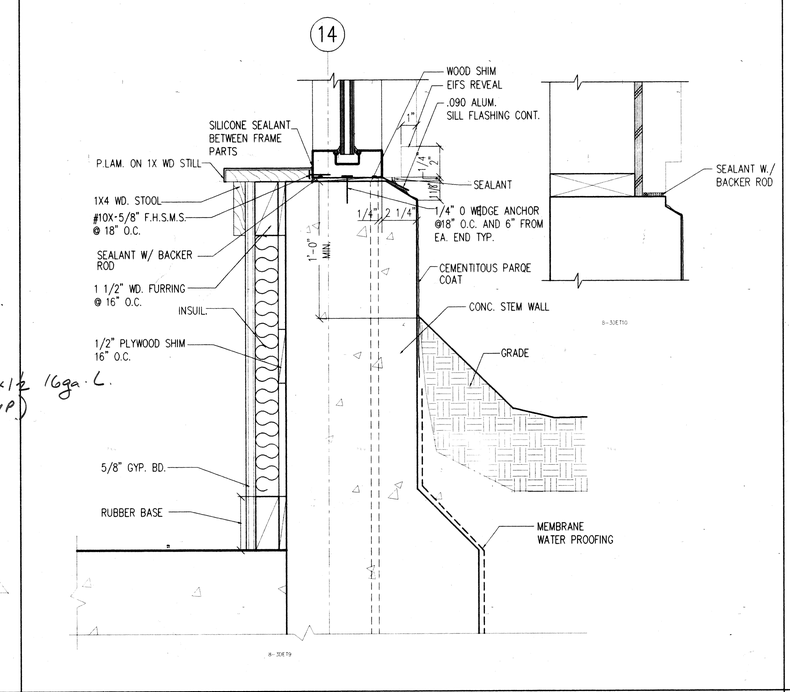

5A	1ST. FLOOR REC. RM. SILL - EAST SIDE
3" = 1'-0"	REF: (8-3NEW9)

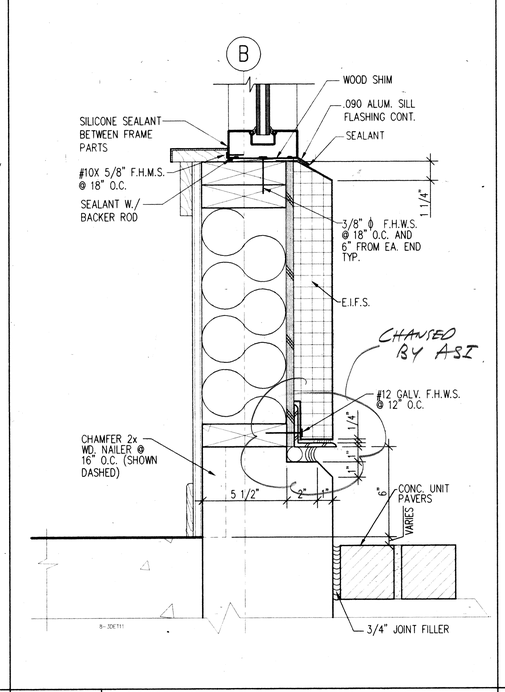

11A	1ST. FLOOR REC. RM. NORTH SILL
3" = 1'-0"	REF: (8-3NEW11)

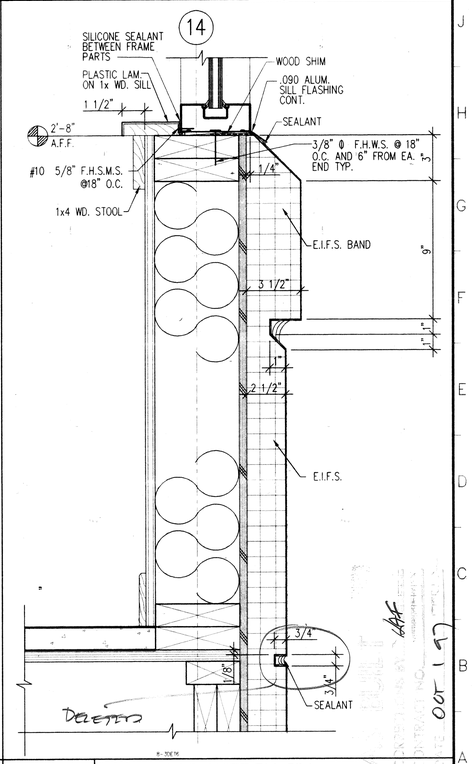

15A	2ND. FLOOR QUIET RM. SILL
3"=1'-0"	REF: (8-3NEW6)

REVISION	DATE	DESCRIPTION	INITIAL

ISSUE FOR PROGRESS REVIEW	09/18/95
ISSUE FOR PLAN CHECK	O.R.S.10/9/95
ISSUE FOR PERMIT	04/04/96
ISSUE FOR BID	4/4/96
ISSUE FOR CONSTRUCTION	

SEAL:

LICENSED ARCHITECT RAMI D. CIANCHETTI No. C 14295 EXP. 10-31-97 STATE OF CALIFORNIA

CONSULTANT:

INTERACTIVE RESOURCES
ARCHITECTURE • PLANNING • ENGINEERING
117 PARK PLACE
POINT RICHMOND
CALIFORNIA 94801
(510) 236-7435
(FAX.) 232-5325

PROJECT:

STUDENT UNION

Diablo Valley College
321 Golf Club Road
Pleasant Hill, CA. 94523

Contra Costa Community College District

STAMP:

APPL. NUMBER:

KEY PLAN:

SHEET TITLE:

EXTERIOR WINDOW DETAILS

SCALE	AS NOTED
PROJ. NO.	A94087.04

PREPARATION AND REVIEW

PURPOSE	PERSONAL/INITIAL	DATE
DRAWN BY	IRI	09/18/95
PROJ. MGR.	GYN	09/18/95
PEER REVIEW	TKB	04/11/96

SHEET NUMBER:

A 8.2

NUMBER: OF:

L:\A-94087.04\CAD\A2-E.DWG

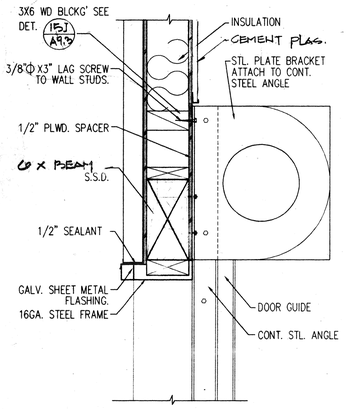

1Q ROLL-UP DOOR HEAD

1 1/2" = 1'-0" REF: CHAD0117.DWG (ROLLUPHD)

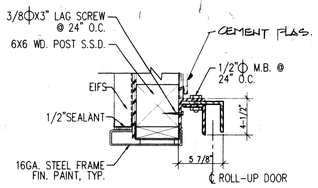

1L ROLL-UP DOOR JAMB

1 1/2" = 1'-0" REF: (ROLLUP)

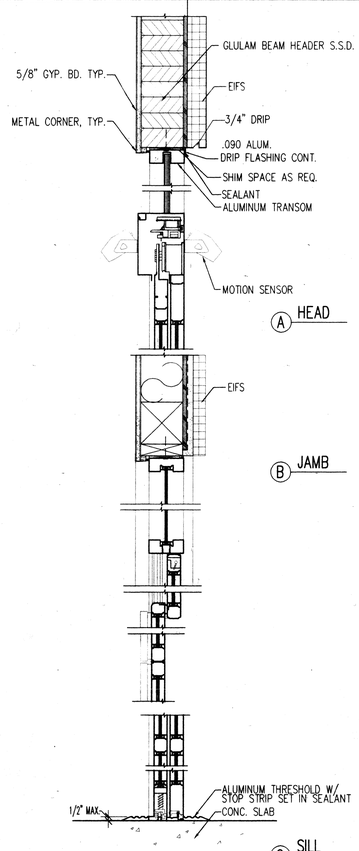

1A UPPER ENTRY AUTOMATIC ENTRY DOOR

1 1/2" = 1'-0" REF: (8-4DET1)

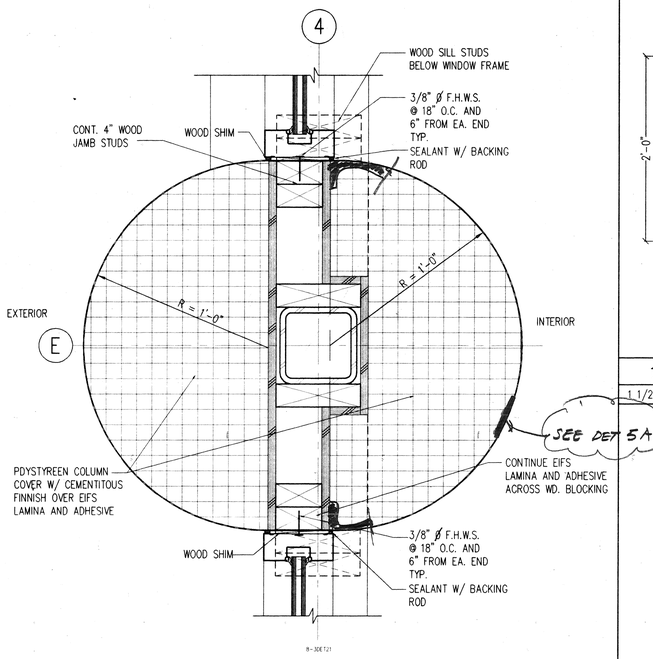

5K UPPER ENTRY COLUMN AT WINDOW HT.

3" = 1'-0" REF: (8-3NEW21)

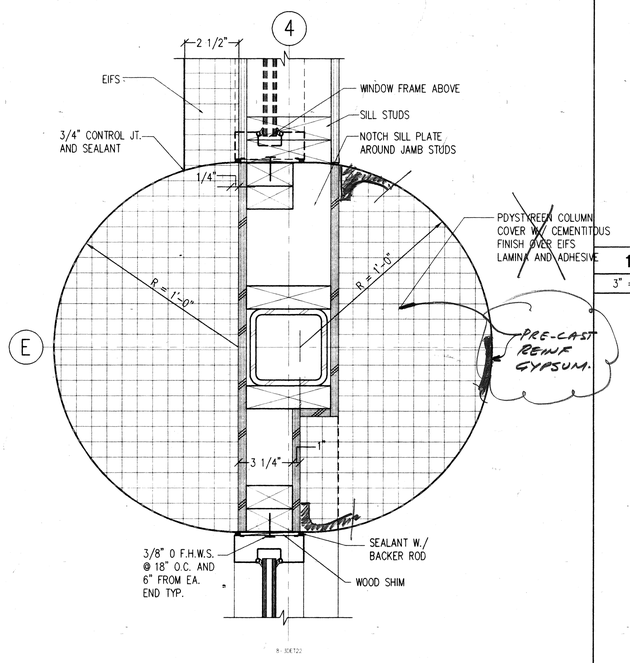

5A UPPER ENTRY COLUMN AT SILL HT.

3" = 1'-0" REF: (8-3NEW22)

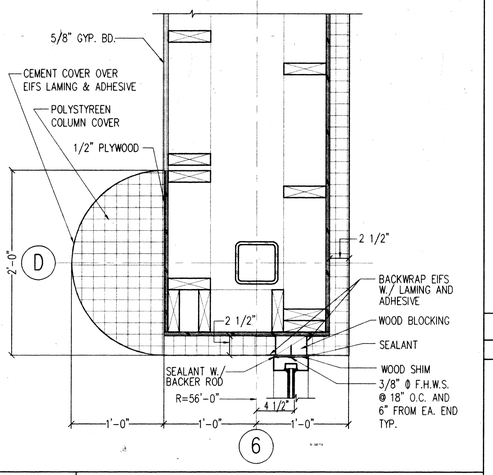

10P JAMB AT ENTRY WINDOWS #106 AND #217

1 1/2" = 1'-0" REF: (8-3NEW19)

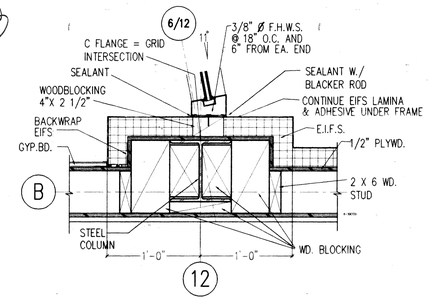

10K JAMB AT ENTRY WINDOWS #106 AND #217

1 1/2" = 1'-0" REF: (8-3NEW20)

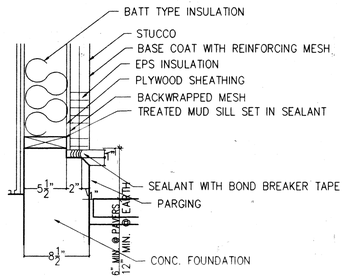

10F TYPICAL EXTERIOR WALL CURB

3" = 1'-0" REF: (8-2DET1)

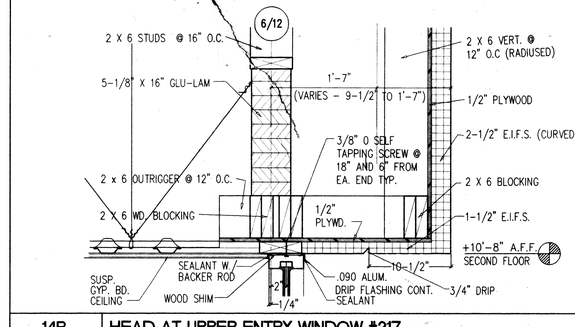

14R HEAD AT UPPER ENTRY WINDOW #217

1 1/2" = 1'-0" REF: (8-3NEW18)

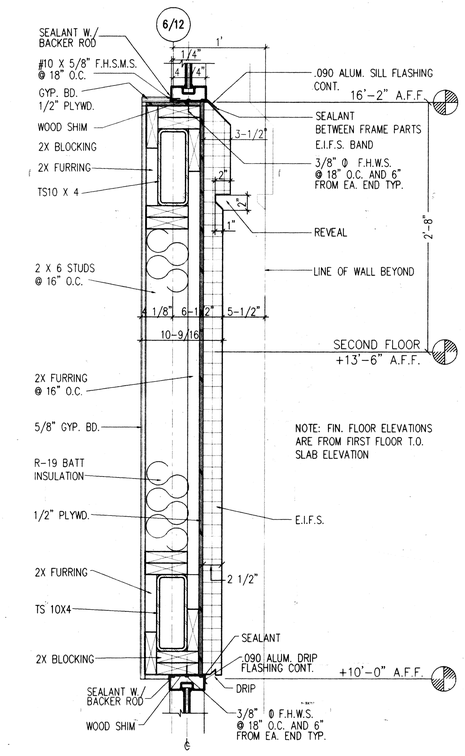

14G LOBBY SPANDRELL - WINDOWS #106 AND #217

1/2" = 1'-0" REF: (8-3NEW17)

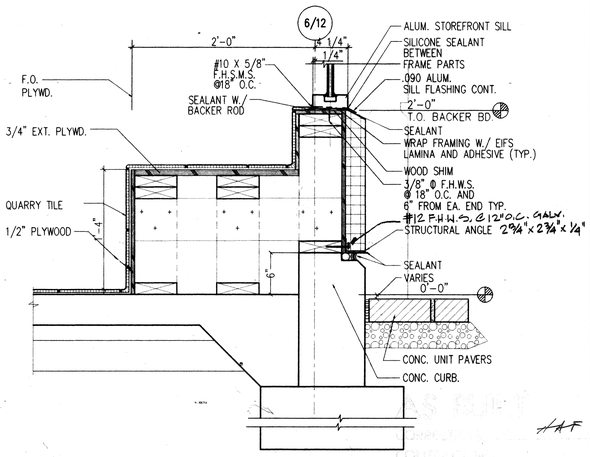

14A LOWER ENTRY SILL - WINDOW #106

1 1/2" = 1'-0" REF: (8-3NEW16)

REVISION	DATE	DESCRIPTION	INITIAL

ISSUE FOR PROGRESS REVIEW	09/18/95
ISSUE FOR PLAN CHECK	O.R.S.10/9/95
ISSUE FOR PERMIT	04/04/96
ISSUE FOR BID	4/4/96
ISSUE FOR CONSTRUCTION	

SEAL:

LICENSED ARCHITECT — CLIFF D. CRANSTON — No. C 13600 — EXP. 10-31-97 — STATE OF CALIFORNIA

CONSULTANT:

INTERACTIVE RESOURCES
ARCHITECTURE • PLANNING • ENGINEERING
117 PARK PLACE
POINT RICHMOND
CALIFORNIA 94801
(510) 236-7435
(FAX.) 232-5325

PROJECT:

STUDENT UNION

Diablo Valley College
321 Golf Club Road
Pleasant Hill, CA. 94523

Contra Costa Community College District

STAMP:

APPROVED — DIV. OF STATE ARCHITECT — CONTRA COSTA AREA OFFICE — APPL # A1 39 — BY LS GR — 4-17-96

APPL. NUMBER:

KEY PLAN:

SHEET TITLE:

EXTERIOR WINDOW DETAILS

SCALE	AS NOTED
PROJ. NO.	A94087.04

PREPARATION AND REVIEW		
PURPOSE	PERSONAL/INITIAL	DATE
DRAWN BY	IRI	09/18/95
PROJ. MGR.	GYN	09/18/95
PEER REVIEW	TKB	04/11/96

SHEET NUMBER:

A 8.3

NUMBER: OF:

L:\A94087.04\CAD\AEC-2.DWG

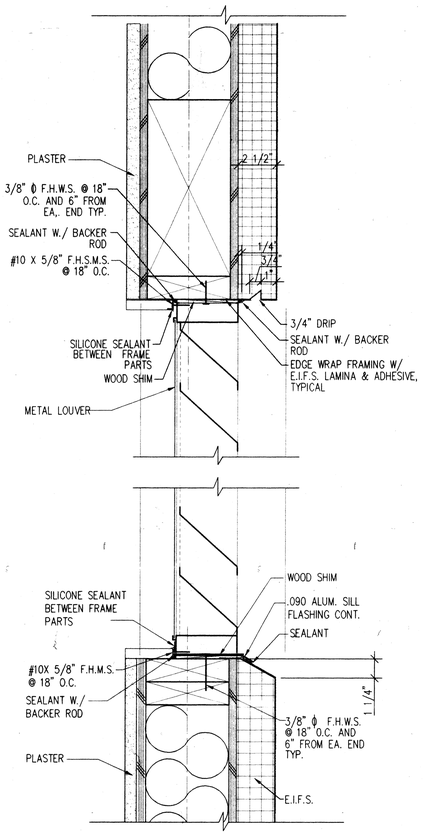

1K | WALL LOUVER

1 1/2" = 1'-0" | REF: (9-3DETA5)

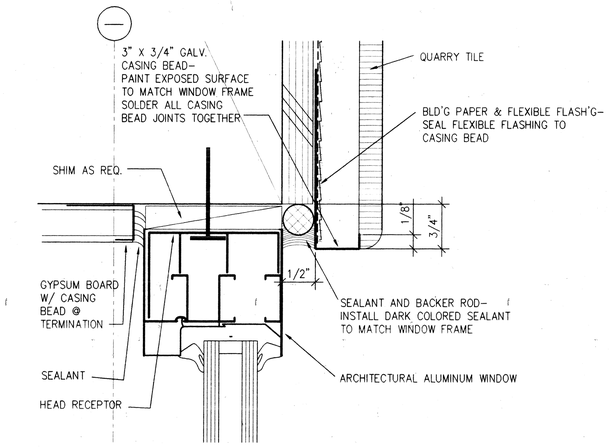

5K | TYP. SECOND FLOOR WINDOW HEAD (JAMB SIM.)

FULL SIZE | REF: (8-4NEW2)

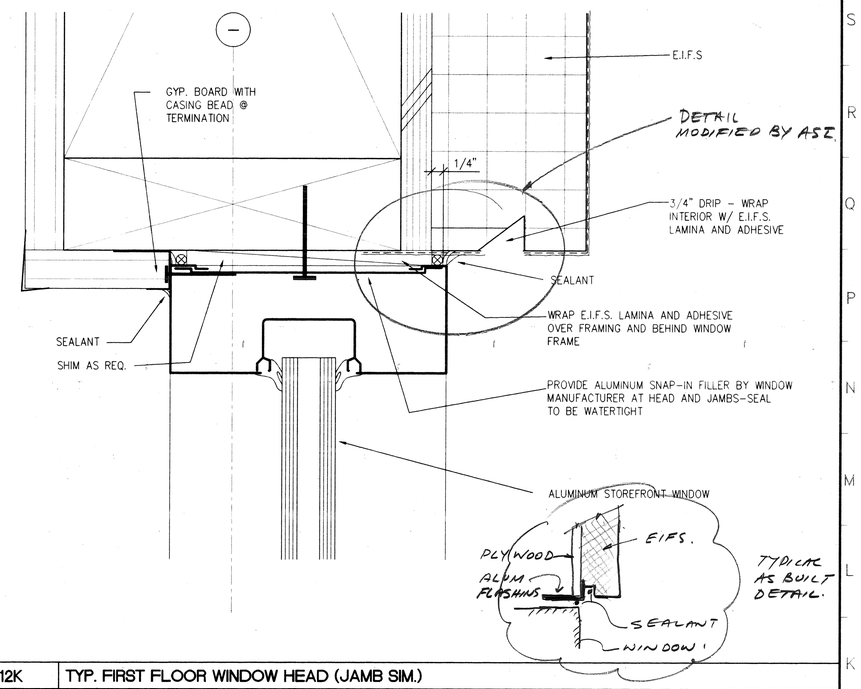

12K | TYP. FIRST FLOOR WINDOW HEAD (JAMB SIM.)

FULL SIZE | REF: (8-4NEW3)

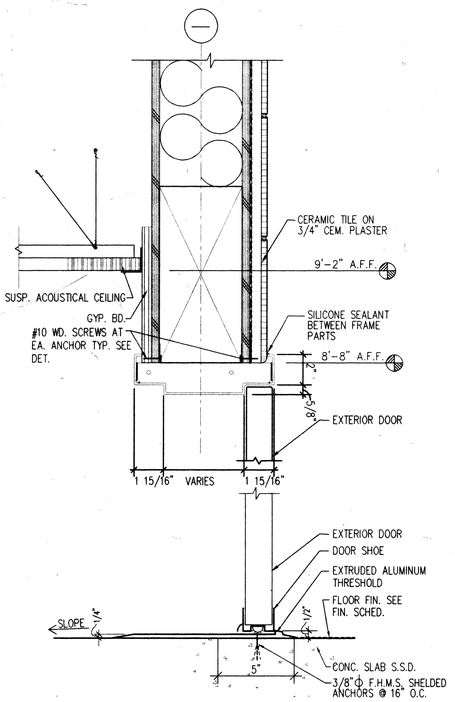

1A | EXTERIOR HOLLOW METAL DOOR

1 1/2" = 1'-0" | REF: (9-3DETA4)

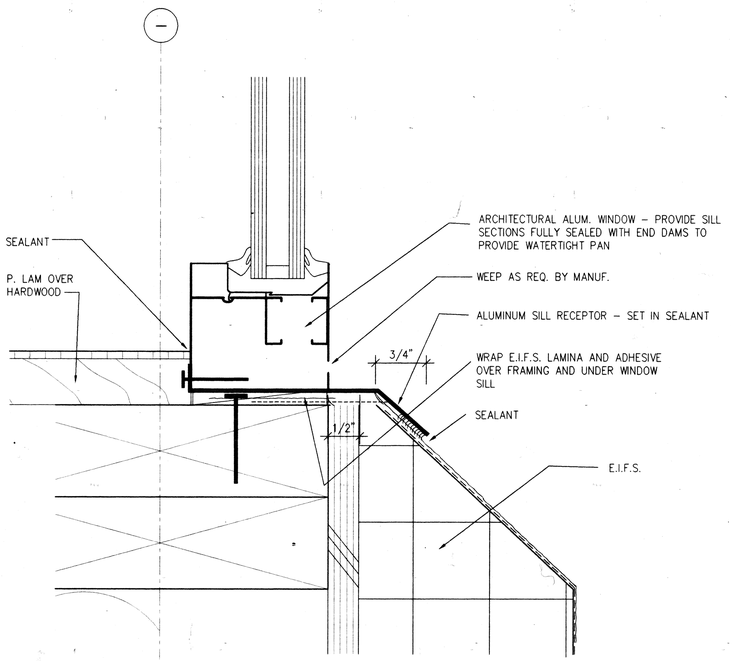

5A | TYP. SECOND FLOOR WINDOW SILL

FULL SIZE | REF: (8-4NEW4)

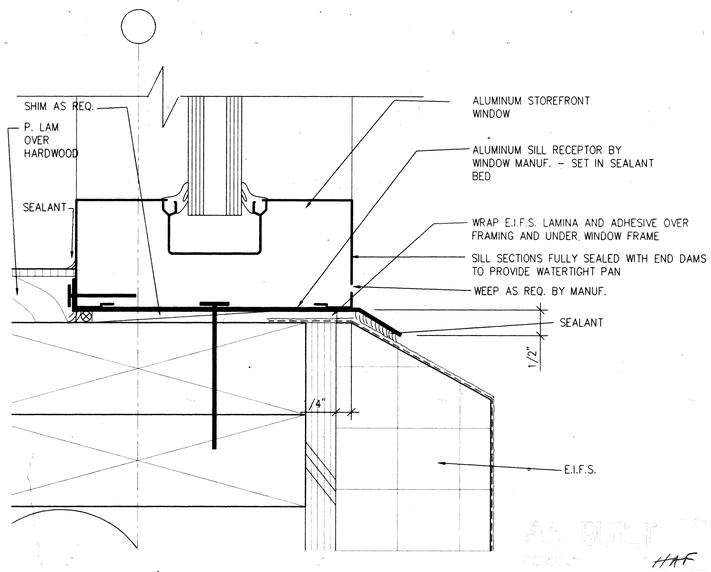

AS BUILT CONDITION HAF Oct, 97.

12A | TYP. FIRST FLOOR WINDOW SILL

FULL SIZE | REF: (8-4NEW1)

REVISION	DATE	DESCRIPTION	INITIAL

ISSUE FOR PROGRESS REVIEW	09/18/95
ISSUE FOR PLAN CHECK	O.R.S 10/9/95
ISSUE FOR PERMIT	04/04/96
ISSUE FOR BID	4/4/96
ISSUE FOR CONSTRUCTION	

SEAL:

LICENSED ARCHITECT RALPH D. CRANDELL 3330 Exp. 10-31-97 STATE OF CALIFORNIA

CONSULTANT:

INTERACTIVE RESOURCES

ARCHITECTURE • PLANNING • ENGINEERING

117 PARK PLACE
POINT RICHMOND
CALIFORNIA 94801
(510) 236-7435
(FAX.) 232-5325

PROJECT:

STUDENT UNION

Diablo Valley College
321 Golf Club Road
Pleasant Hill, CA. 94523

Contra Costa Community College District

STAMP:

DIVISION OF THE STATE ARCHITECT APPROVED APPL 5 41 39 12 28 GR 4-17-96

APPL. NUMBER:

KEY PLAN:

SHEET TITLE:

EXTERIOR DETAILS

SCALE	AS NOTED
PROJ. NO.	A94087.04

PREPARATION AND REVIEW		
PURPOSE	PERSONAL/INITIAL	DATE
DRAWN BY	IRI	09/18/95
PROJ. MGR.	GYN	09/18/95
PEER REVIEW	TKB	04/11/96

SHEET NUMBER:

A 8.4

NUMBER: OF:

LAYOUT#1 • LAST PLOT: 12:29:46

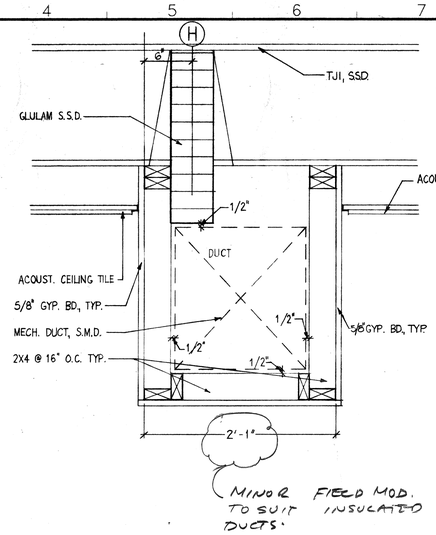

4P	DUCT / BEAM FURRING
1 1/2" = 1'-0"	REF:

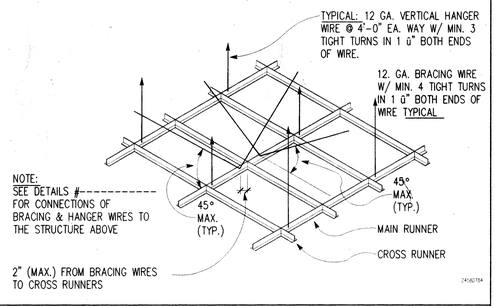

8R	TYPICAL SUPPORTS • T-BAR GRID
NOT TO SCALE	REF:

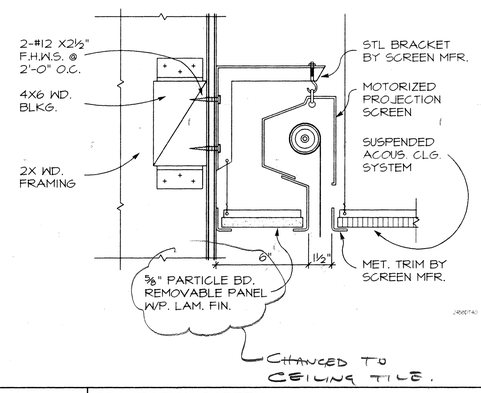

8K	PROJECTION SCREEN
3" = 1'-0"	REF:

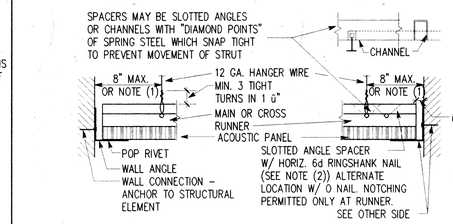

HOIZONTAL STRUT – TYPICAL (SEE NOTE (b) 5)

DETAIL (A)

NOTES:
(1) ü" OF THE LENGTH OF THE END RUNNER WHICHEVER IS LESS.
(2) NAILS AT ENDS OF HORIZONTAL STRUTS ARE TO BE PLACED WITH NAIL HEAD TOWARD CENTERLINE OF SPAN OF STRUT.

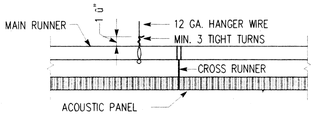

ACCEPTABLE HANGER WIRE CONNECTION TO GRID

DETAIL (B)

12M	WIRE ATTACHMENT • T-BAR GRID
N.T.S.	REF

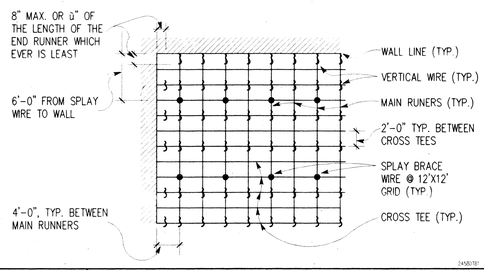

12J	CEILING GRID
N.T.S.	REF

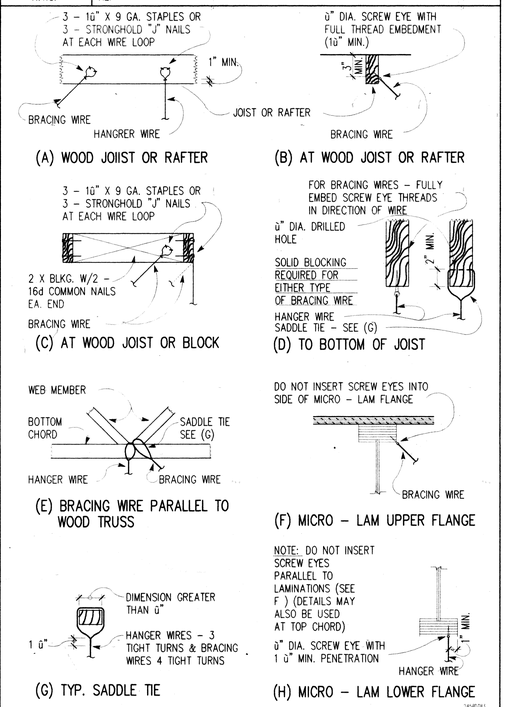

12A	TYP. CEILING WIRE ANCHORAGE • WD. FRAMING
N.T.S.	REF

CEILING NOTES

1. 12 GA. (MIN.) HANGER WIRES MAY BE USED FOR UP TO AND INCLUDING 4'–0"X4'–0" GRID SPACING ALONG MAIN RUNNERS.
2. PROVIDE 12 GA. HANGER WIRES AT THE ENDS OF ALL MAIN AND CROSS RUNNERS WITHIN 8" FROM THE SUPPORT OR WITHIN 1/4 OF THE LENGTH OF THE END TEE, WHICHEVER IS LEAST, FOR THE PERIMETER OF THE CEILING AREA. END CONNECTIONS FOR RUNNERS WHICH ARE DESIGNED AND DETAILED TO RESIST THE APPLIED HORIZONTAL FORCES MAY BE USED IN LIEU OF 12 GA. HANGER WIRES SUBJECT TO ORS/SSS REVIEW AND APPROVAL.
3. PROVIDE TRAPEZE OR OTHER SUPPLEMENTARY SUPPORT MEMBERS AT OBSTRUCTIONS TO MAIN HANGER SAPACING. PROVIDE ADDITIONAL HANGERS, STRUTS OR BRACES AS REQUIRED AT ALL CEILING BREAKS, SOFFITS OR DISCONTINUOUS AREAS. HANGER WIRES THAT ARE MORE THAN 1 IN 6 OUT OF PLUMB ARE TO HAVE COUNTER–SLOPING WIRES.
4. CEILING GRID MEMBERS MAY BE ATTACHED TO NOT MORE THAN 2 ADJACENT WALLS. CEILING GRID MEMBERS SHOULD BE AT LEAST 1/2 INCH FREE OF OTHER WALLS. IF WALLS RUN DIAGONALLY TO CEILING GRID SYSTEM RUNNERS, ONE END OF MAIN AND CROSS RUNNERS SHOULD BE FREE AND A MINIMUM OF 1/2 INCH CLEAR OF WALL.
5. AT THE PERIMETER OF THE CEILING AREA WHERE MAIN OR CROSS RUNNERS ARE NOT CONNECTED TO THE ADJACENT WALL, PROVIDE INTERCONNECTION BETWEEN THE RUNNERS AT THE FREE END TO PREVENT LATERAL SPREADING. A METAL STRUT OR A 16 GA. WIRE WITH A POSITIVE MECHANICAL CONNECTION TO THE RUNNER MAY BE USED. WHERE THE PERPENDICULAR DISTANCE FROM THE WALL TO THE FIRST PARALLEL RUNNER IS 12" OR LESS, THIS INTERLOCK IS NOT REQUIRED.
6. PROVIDE SETS OF FOUR 12 GA. SPLAYED BRACING WIRES ORIENTED 90 DEGREES FROM EACH OTHER AT THE FOLLOWING SPACING:
   A. FOR SCHOOL BUILDINGS, PLACE SETS OF BRACING WIRES AND COMPERSSION STRUT AT A SPACING NOT MORE THAN 12 FEET BY 12 FEET ON CENTER.
   B. PROVIDE BRACING WIRES AND COMPRESSION STRUT AT LOCATIONS NOT MORE THAN 1/2 THE SPACING GIVEN IN (A) ABOVE FROM EACH PERIMETER WALL AND AT THE EDGE OF VERTICAL CEILING OFFSETS.

   THE SLOPE OF THESE WIRES SHOULD NOT EXCEED 45 DEGREES FROM THE PLANE OF THE CEILING AND SHOULD BE TAUT WITHOUT CAUSING THE CEILING TO LIFT. SPLICES IN BRACING WIRES ARE NOT TO BE PERMITTED WITHOUT SPECIAL ORS/SSS APPROVAL.
7. FASTEN HANGER WIRES WITH NOT LESS THAN 4 TIGHT TURNS. FASTEN BRACING WIRES WITH 4 TIGHT TURNS. MAKE ALL TIGHT TURNS WITHIN A DISTANCE OF 1–1/2 INCHES. HANGER OR BRACING WIRE ANCHORS TO THE STRUCTURE SHOULD BE INSTALLED IN SUCH A MANNER THAT THE DIRECTION OF THE WIRE ALIGNS AS CLOSELY AS POSSIBLE WITH THE DIRECTION OF THE FORCES ACTING ON THE WIRE.
   NOTE: WIRE TURNS MADE BY MACHINE WHERE BOTH STRANDS HAVE BEEN DEFORMED OR BENT IN WRAPPING CAN WAIVE THE 1–1/2" REQUIREMENT, BUT THE NUMBER OF TURNS SHOULD BE MAINTAINED AND BE AS TIGHT AS POSSIBLE.
8. SEPARATE ALL CEILING HANGING AND BRACING WIRES AT LEAST 6 INCHES FROM ALL UNBRACED DUCTS, PIPES, CONDUIT, ETC. IT IS ACCEPTABLE TO ATTACH LIGHTWEIGHT ITEMS, SUCH AS SINGLE ELECTRICAL CONDUIT NOT EXCEEDING 3/4" NOMINAL DIAMETER, TO HANGER WIRES USING CONNECTORS ACCEPTABLE TO ORS/SSS.
9. ATTACH ALL LIGHT FIXTURES TO THE CEILING GRID RUNNERS TO RESIST A HORIZONTAL FORCE EQUAL TO THE WEIGHT OF THE FIXTURES.
10. FLUSH OR RECESSED LIGHT FIXTURES AND AIR TERMINALS OR SERVICES WEIGHING LESS THAN 56 POUNDS MAY BE SUPPORTED DIRECTLY ON THE RUNNERS OF A HEAVY DUTY GRID SYSTEM BUT, IN ADDITION, THEY MUST HAVE A MINIMUM OF TWO 12 GA. SLACK SAFETY WIRES ATTACHED TO THE FIXTURE AT DIAGONAL SERVICES WEIGHING LESS THAN 56 POUNDS MAY BE SUPPORTED CORNERS AND ANCHORED TO THE STRUCTURE ABOVE.
    ALL 4 FT.X4 FT. LIGHT FIXTURES MUST HAVE SLACK SAFETY WIRES AT EACH CORNER.
    ALL FLUSH OR RECESSED LIGHT FIXTURES AND AIR TERMINALS OR SERVICES WEIGHTING 56 POUNDS OR MORE MUST BE INDEPENDENTLY SUPPORTED BY NOT LESS THAN 4 TAUT 12 GA. WIRES EACH ATTACHED TO THE FIXTURE AND TO THE STRUCTURE ABOVE REGARDLESS OF THE TYPE OF CEILING GRID SYSTEM USED.
    THE 4 TAUT 12 GA. WIRES INCLUDING THEIR ATTACHMENT TO THE STRUCTURE ABOVE MUST BE CAPABLE OF SUPPORTING 4 TIMES THE WEIGHT OF THE UNIT.
11. ALL FIXTURES AND AIR TERMINALS OR SERVICES SUPPORTED ON INTERMEDIATE DUTY GRID SYSTEMS MUST BE INDEPENDENTLY SUPPORTED BY NOT LESS THAN 4 TAUT 12 GA. WIRES EACH ATTACHED TO THE FIXTURE OR TERMINAL AND TO THE STRUCTURE ABOVE.
12. SUPPORT SURFACE MOUNTED LIGHT FIXTURE BY AT LEAST TWO POSITIVE DEVICES WHICH SURROUND THE CEILING RUNNER AND WHICH ARE EACH SUPPORTED FROM THE STRUCTURE ABOVE BY 12 GA. WIRE. SPRING CLIPS OR CLAMPS THAT CONNECT ONLY TO THE RUNNER ARE NOT ACCEPTABLE. PROVIDE ADDITIONAL SUPPORTS WHEN LIGHT FIXTURE ARE 8 FEET OF LONGER.
13. SUPPORT PENDANT MOUNTED LIGHT FIXTURES DIRECTLY FROM THE STRUCTURE ABOVE WITH HANGER WIRES OR CABLES PASSING THROUGH EACH PENDANT HANGER AND CAPABLE OF SUPPORTING 4 TIMES THE WEIGHT OF THE FIXTURE. (SEE ALSO NOTE 10). SPECIAL DEATILS ARE NECESSARY FOR THIS CONDITION AT THE CEILING GRID.
14. CLASSIFICATION OF CEILING GRID:
    CLASSIFICATION OF CEILING GRID IS HEAVY DUTY. MANUFACTURER'S CATALOG NUMBER–MAIN RUNNER #270 AS MANUFACTURERED BY CHICAGO METALLIC CORP. MANUFACTURER'S CATALOG NUMBER – CROSS RUNNER #1254 OR #1274 AS MANUFACTURERED BY CHICAGO METALLIC CORP.

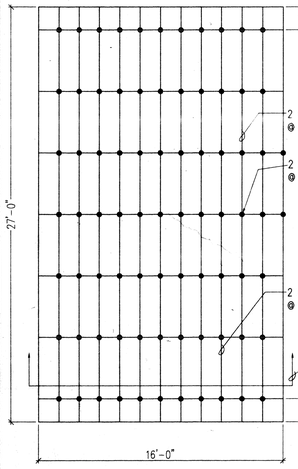

1F	VAULTED CEILING FRAMING PLAN
N.T.S.	REF

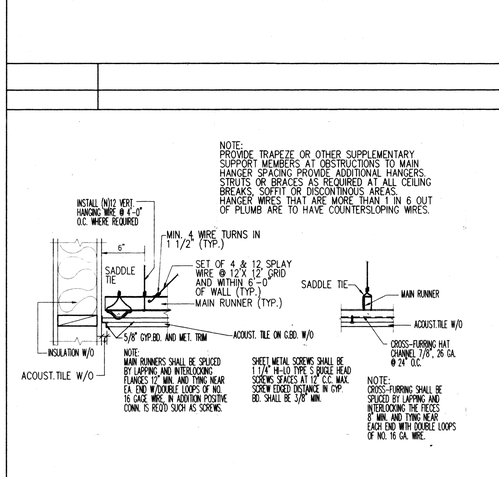

4F	TYP. SUSPENDED GYP. BD. CEILING DETAILS
N.T.S.	REF

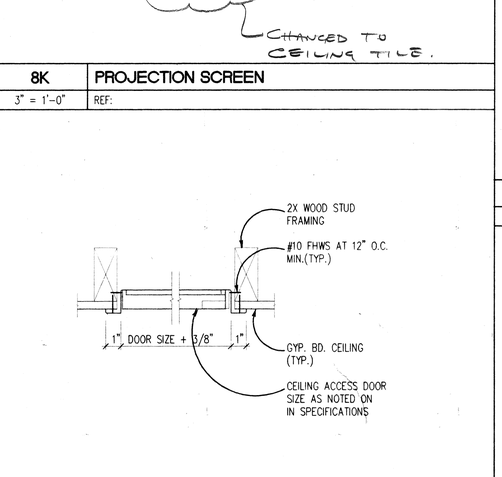

8F	CEILING ACCESS DOOR
NOT TO SCALE	REF:

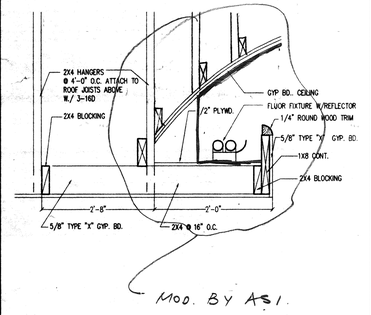

MOD. BY ASI

1A	UPPER ENTRY VALENCE
N.T.S.	REF

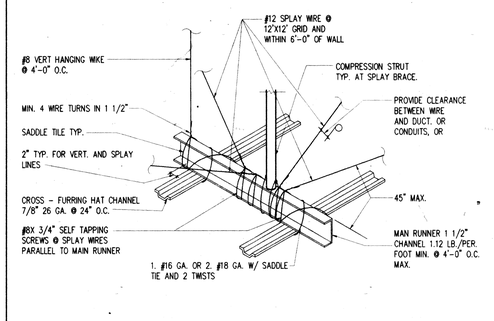

4A	THRUST STRUT. • GYP. BD. CEILING
N.T.S.	REF

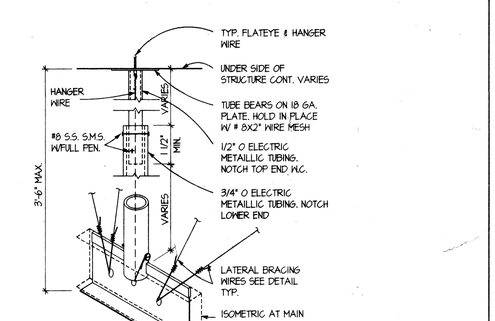

8A	THRUST STRUT AT T-BAR CELING
N.T.S.	REF

REVISION	DATE	DESCRIPTION	INITIAL

ISSUE FOR PROGRESS REVIEW	09/18/95
ISSUE FOR PLAN CHECK	O.R.S.10/9/95
ISSUE FOR PERMIT	04/04/96
ISSUE FOR BID	4/4/96
ISSUE FOR CONSTRUCTION	

SEAL:

LICENSED ARCHITECT — RICHARD D. CIANFICHI — No. C 22000 — REN. 10-31-97 — STATE OF CALIFORNIA

CONSULTANT:

INTERACTIVE RESOURCES
ARCHITECTURE • PLANNING • ENGINEERING
117 PARK PLACE
POINT RICHMOND
CALIFORNIA 94801
(510) 236-7435
(FAX.) 232-5325

PROJECT:

STUDENT UNION

Diablo Valley College
321 Golf Club Road
Pleasant Hill, CA. 94523

Contra Costa Community College District

STAMP:

APPROVED AS NOTED STAMP — DIVISION OF THE STATE ARCHITECT — STRUCTURAL SAFETY — APPL 6 41 3 9 — 4-17-96

APPL. NUMBER:

KEY PLAN:

SHEET TITLE:

CEILING DETAILS

SCALE	AS NOTED
PROJ. NO.	A94087.04

PREPARATION AND REVIEW		
PURPOSE	PERSONAL/INITIAL	DATE
DRAWN BY	IRI	09/18/95
PROJ. MGR.	GYN	09/18/95
PEER REVIEW	TKB	04/11/96

SHEET NUMBER:

A 9.1

NUMBER: OF:

AS NOTED — COMPLIANCE WITH CODE REQUIREMENTS — DATE Oct 1, 97 — HAF.

L:\AS\94087.04\CAD\A9-1.DWG

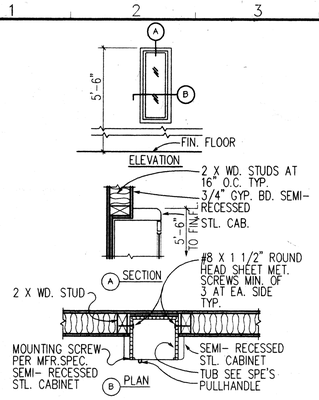

1Q	FIRE EXTINGUISHER CAB.
NOT TO SCALE	REF: 9-3DET8

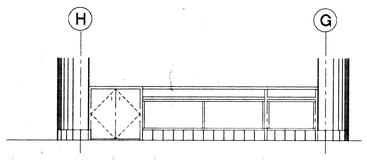

1L	DINING COUNTER REAR ELEVATION
1/4" = 1'-0"	REF: 9-3DET0

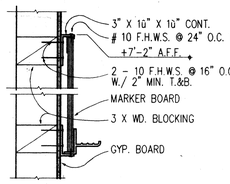

1F	MARKER BOARD
NOT TO SCALE	REF: DVCDET.36

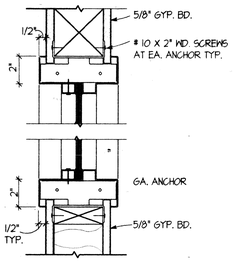

1A	INTERIOR WINDOW
NOT TO SCALE	REF: 9-2DETP.DWG

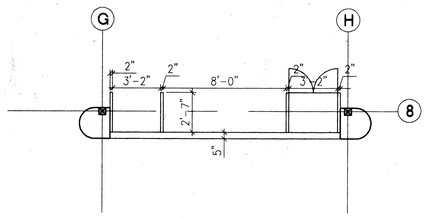

4S	DINING COUNTER PLAN - BASE COUNTER
1/4" = 1'-0"	REF: 9-3DETF

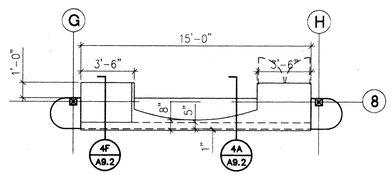

4P	DINING COUNTER PLAN - COUNTER TOP
1/4" = 1'-0"	REF: 9-3DETB

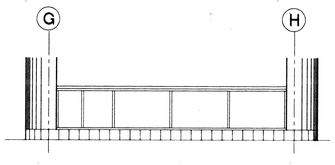

4L	DINING COUNTER FRONT ELEVATION
1/4" = 1'-0"	REF: 9-3DETN

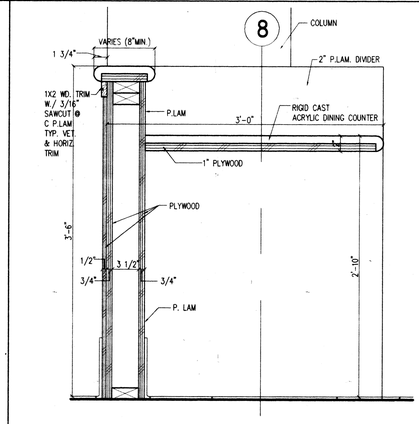

4F	DINING COUNTER SECTION
1-1/2" = 1'-0"	REF: 9-3DETH

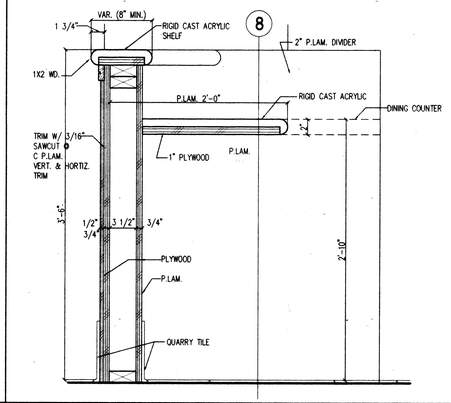

4A	DINING COUNTER SECTION
1-1/2" = 1'-0"	REF: 9-3DETG

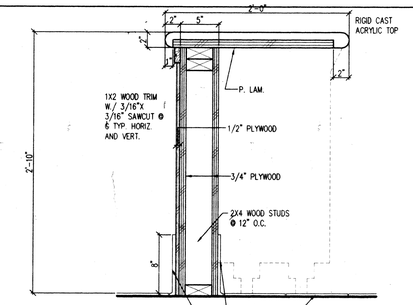

8L	CASHIER COUNTER SECTION
1-1/2" = 1'-0"	REF: 9-3DETM

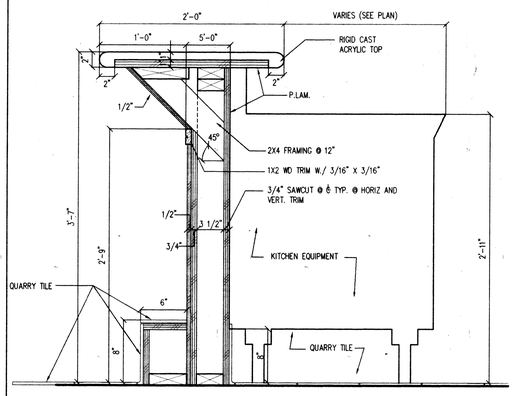

8F	SERVICE COUNTER SECTION
1-1/2" = 1'-0"	REF: 9-3DETL

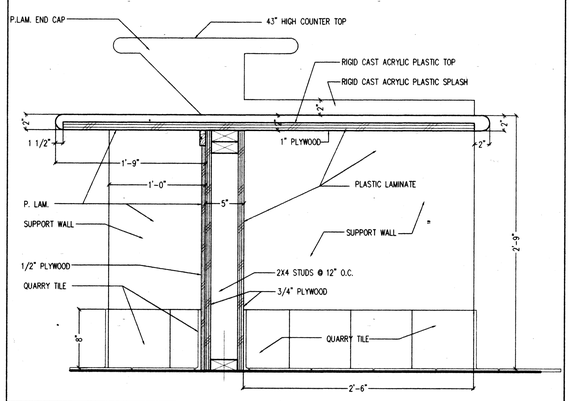

8A	SERVICE COUNTER SECTION-ACCESSIBLE COUNTER TOP
1-1/2" = 1'-0"	REF: 9-3DETI

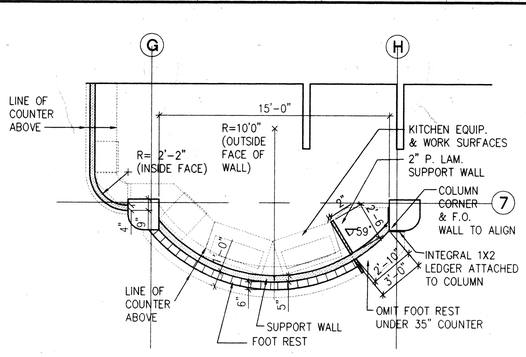

13Q	SERVICE COUNTER PLAN - BASE COUNTER
1/4" = 1'-0"	REF: 9-3DETA

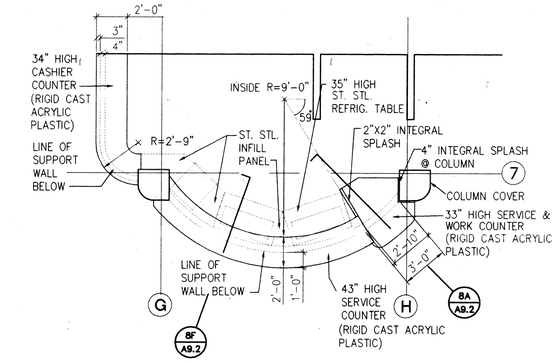

13K	SERVICE COUNTER PLAN - COUNTER TOP
1/4" = 1'-0"	REF: 9-3DETK

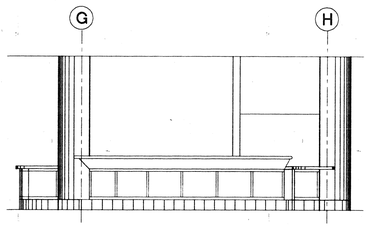

13F	SERVICE COUNTER ELEVATION
1/4" = 1'-0"	REF: 9-3DETO

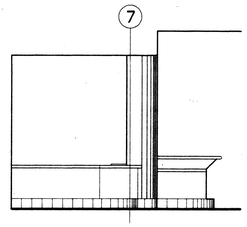

AS PRINT
CONSTRUCTION
DATE
HAF
Oct 1 97

13A	CASHER'S COUNTER ELEVATION
1/4" = 1'-0"	REF: 9-3DETJ

REVISION	DATE	DESCRIPTION	INITIAL

ISSUE FOR PROGRESS REVIEW	09/18/95
ISSUE FOR PLAN CHECK	O.R.S.10/9/95
ISSUE FOR PERMIT	04/04/96
ISSUE FOR BID	4/4/96
ISSUE FOR CONSTRUCTION	

SEAL:

LICENSED ARCHITECT JAMES B. CLANCEY No. C-8242 REN. 10-31-97 STATE OF CALIFORNIA

CONSULTANT:

INTERACTIVE RESOURCES
ARCHITECTURE • PLANNING • ENGINEERING
117 PARK PLACE
POINT RICHMOND
CALIFORNIA 94801
(510) 236-7435
(FAX.) 232-5325

PROJECT:

STUDENT UNION

Diablo Valley College
321 Golf Club Road
Pleasant Hill, CA. 94523

Contra Costa Community College District

STAMP:

APPROVED AS NOTED DEPARTMENT OF HEALTH SERVICES 176 6413 9 4-17-96

APPL. NUMBER:

KEY PLAN:

SHEET TITLE:

INTERIOR DETAILS

SCALE	AS NOTED
PROJ. NO.	A94087.04

PREPARATION AND REVIEW

PURPOSE	PERSONAL/INITIAL	DATE
DRAWN BY	IRI	09/18/95
PROJ. MGR.	GYN	09/18/95
PEER REVIEW	TKB	04/11/96

SHEET NUMBER:

A 9.2

NUMBER: OF:

LAYER/PEN/LEVEL/COLOR: 32/40

35

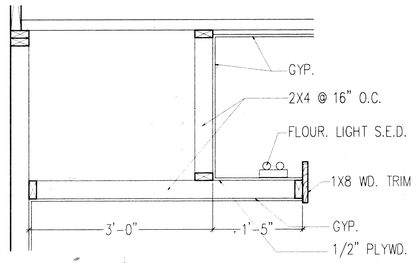

10N

12" = 1'-0" | REF: (9-3DETA10)

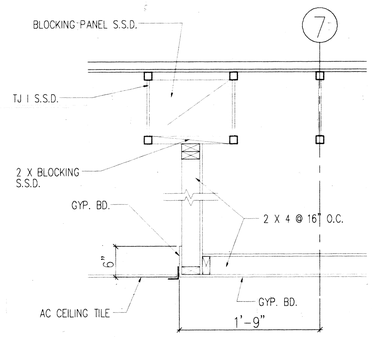

10J

12" = 1'-0" | REF: (9-3DETA9)

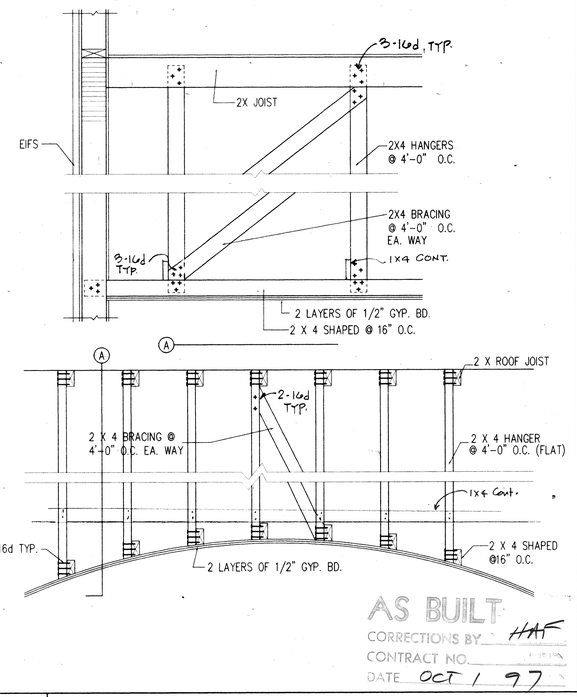

AS BUILT
CORRECTIONS BY HAF
CONTRACT NO.
DATE OCT / 97

10A FRAMING • VAULTED CEILING

NOT TO SCALE | REF: (9-3DETA6)

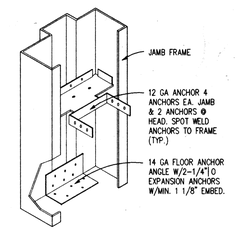

15R DOOR FRAME ANCHORAGE

NOT TO SCALE | REF: (9-3DETA2)

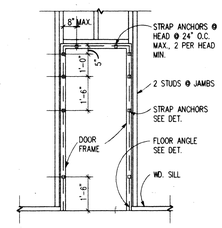

15N DOOR FRAME ELEVATION

NOT TO SCALE | REF: (9-3DETA3)

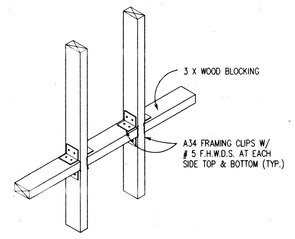

15J TYP. WOOD BACKING PLATE

NOT TO SCALE | REF: (9-3DETA1)

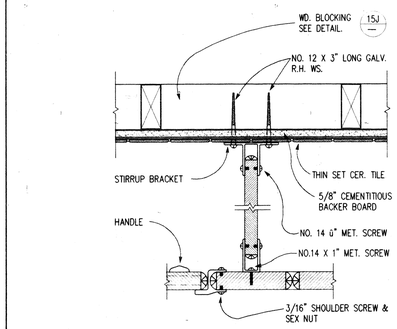

15E TOILET PARTITION

NOT TO SCALE | REF: (9-3DETA7)

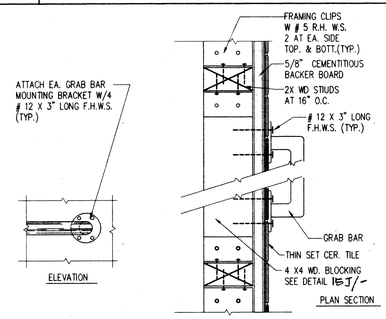

15A GRAB BAR MOUTING DET.

NOT T SCALE | REF: (9-3DETA8)

REVISION	DATE	DESCRIPTION	INITIAL

ISSUE FOR PROGRESS REVIEW	09/18/95
ISSUE FOR PLAN CHECK	O.R.S.10/9/95
ISSUE FOR PERMIT	04/02/96
ISSUE FOR BID	4/4/96
ISSUE FOR CONSTRUCTION	

SEAL:

LICENSED ARCHITECT — No. C-14206 — REN. 10-31-97 — STATE OF CALIFORNIA

CONSULTANT:

INTERACTIVE RESOURCES

ARCHITECTURE • PLANNING • ENGINEERING

117 PARK PLACE
POINT RICHMOND
CALIFORNIA 94801
(510) 236-7435
(FAX.) 232-5325

PROJECT:

STUDENT UNION

Diablo Valley College
321 Golf Club Road
Pleasant Hill, CA. 94523

Contra Costa Community College District

STAMP:

RECEIVED
OFFICE OF REGIONAL PROJECTS
APPL 6 41 3 9
4-17-96

APPL. NUMBER:

KEY PLAN:

SHEET TITLE:

INTERIOR DETAILS

SCALE	
PROJ. NO.	A94087.04

PREPARATION AND REVIEW		
PURPOSE	PERSONAL/INITIAL	DATE
DRAWN BY	IRI	09/18/95
PROJ. MGR.	GYN	09/18/95
PEER REVIEW		

SHEET NUMBER:

A 9.3

NUMBER: OF:

GENERAL NOTES

ALL WORK SHALL BE DONE IN ACCORDANCE WITH THE SPECIFICATIONS AND THE 1989 CALIFORNIA BUILDING CODE (CBC), TITLE 24, PART 2 OF THE CALIFORNIA CODE OF REGULATIONS (1989 AMENDMENTS TO THE 1988 UNIFORM BUILDING CODE).

THESE NOTES SHALL APPLY TO ALL STRUCTURAL DRAWINGS UNLESS OTHERWISE NOTED OR SHOWN.

FEATURES OF CONSTRUCTION SHOWN ARE TYPICAL AND SHALL APPLY GENERALLY THROUGHOUT SIMILAR CONDITIONS.

UNLESS SHOWN OTHERWISE, DETAILS SHOWN ON "TYPICAL DETAIL" SHEETS SHALL BE USED WHENEVER APPLICABLE. SPECIFIC DETAILS ON THE STRUCTURAL DRAWINGS TAKE PRECEDENCE OVER "TYPICAL DETAILS." SPECIFIC NOTES ON STRUCTURAL DRAWINGS TAKE PRECEDENCE OVER NOTES SHOWN IN "GENERAL NOTES." DETAILS ON STRUCTURAL DRAWINGS TAKE PRECEDENCE OVER SPECIFICATIONS.

THE STRUCTURAL DRAWINGS SHOW STRUCTURAL FEATURES. EXACT CONFIGURATION FOR INTERIOR PARTITION WALLS ARE SHOWN ON ARCHITECTURAL DRAWINGS, AND ARE NOT NECESSARILY SHOWN ON THE STRUCTURAL DRAWINGS. PROVIDE ANCHORAGE, INSERTS, ANCHOR BOLTS, ETC., FOR STRUCTURAL CONNECTIONS OF TOP, SIDES, AND BOTTOM OF ALL PARTITION WALLS AS LOCATED ON THE ARCHITECTURAL DRAWINGS.

REFER TO THE ARCHITECTURAL DRAWINGS AND THE SPECIFICATIONS FOR THE FOLLOWING: FLOOR FINISHES; DEPRESSIONS AND CURBS ON FLOORS; OPENINGS REQUIRED FOR WINDOWS, DOORS, DUCTS, VENTS, PLUMBING, ETC.; FLASHING, INSERTS, ANCHORAGE, HANGERS, ETC., EMBEDDED IN OR ATTACHED TO THE STRUCTURE; ROADWAY, WALKS, PAVING, STAIRS, RAMPS, TERRACES, EXTERIOR GRADES, ELEVATIONS OF ROOF SURFACE AND LOCATIONS OF DRAINS AND PARTITION WALLS.

THE CONTRACTOR SHALL COMPARE THE STRUCTURAL DRAWINGS WITH THE ARCHITECTURAL, PLUMBING, MECHANICAL AND ELECTRICAL DRAWINGS AS TO ALL LAYOUTS, DIMENSIONS AND ELEVATIONS. ANY DISCREPANCIES SHALL BE REPORTED TO THE ARCHITECT FOR PROPER ADJUSTMENT BEFORE PROCEEDING WITH THE WORK.

IN THE EVENT THAT CERTAIN FEATURES OF THE CONSTRUCTION ARE NOT FULLY SHOWN ON THE DRAWINGS OR CALLED FOR IN THE GENERAL NOTES OR SPECIFICATIONS, THEIR CONSTRUCTION SHALL BE OF THE SAME CHARACTER AS SHOWN FOR SIMILAR CONDITIONS.

BEAMS, JOISTS AND ANY OTHER STRUCTURAL ELEMENTS SHALL NOT BE CUT OR PENETRATED, EXCEPT AS SHOWN IN STRUCTURAL DETAILS OR AS APPROVED BY THE ARCHITECT AND STRUCTURAL ENGINEER. AT NEW OR EXISTING CONSTRUCTION, NO OVERCUTTING IS ALLOWED FOR CUTS OR PENETRATIONS.

CONTRACTOR SHALL VERIFY ALL DIMENSIONS IN FIELD PRIOR TO POURING CONCRETE. ANY DISCREPANCIES SHALL BE CALLED TO THE ATTENTION OF THE ARCHITECT BEFORE PROCEEDING WITH THE WORK.

FEATURES OF EXISTING CONSTRUCTION SHALL BE VERIFIED BY THE CONTRACTOR IN THE FIELD AND DISCREPANCIES SHALL BE CALLED TO THE ATTENTION OF THE ARCHITECT.

SEE ARCHITECTURAL DRAWINGS FOR DETAILS ON REQUIRED VENTILATION OF ROOF JOISTS, FLOOR JOISTS AND ATTIC SPACES.

THE GENERAL CONTRACTOR SHALL REVIEW AND COORDINATE ALL SHOP DRAWINGS AND STAMP THEM AS REVIEWED PRIOR TO SUBMITTING THEM TO THE ARCHITECT FOR REVIEW.

SHOP DRAWINGS ARE PRODUCED TO FACILITATE FABRICATION AND COORDINATION BY THE CONTRACTORS. SHOP DRAWINGS SHALL BE EXCHANGED AND COORDINATED BY THE CONTRACTORS. THEY SHALL IN NO WAY TAKE PRECEDENCE OVER THE GOVERNING AGENCY'S APPROVED CONTRACT DOCUMENTS. REVIEW BY THE ARCHITECT AND/OR STRUCTURAL ENGINEER IS INTENDED TO BENEFIT THE FABRICATORS AND CONTRACTORS. NO APPROVAL IS IMPLIED OR INTENDED FOR VARIATIONS BETWEEN SHOP DRAWINGS AND THE CONTRACT DOCUMENTS. WHEN DIFFERENT COMPONENTS ARE ERECTED, THEY ARE INSPECTED FOR CONFORMANCE WITH THE CONTRACT DOCUMENTS, NOT THE SHOP DRAWINGS.

SYMBOLS AND ABBREVIATIONS

New concrete
Sand
Crushed rock
Engineered fill
Earth
Continuous wood member in section
Non-continuous wood member (blocking)
Glue-laminated beam (GL) in section
Plywood (PW) in section
Steel member in section
Concrete masonry unit (C.M.U.)
Slope down
Elevation height

abt.	About	jst.	Joist
AB	Anchor bolt	JH	Joist hanger
arch.	Architectural	lt. wt.	Lightweight
bm.	Beam	max.	Maximum
blkg.	Blocking	mech.	Mechanical
bott.	Bottom	MU	Mechanical unit
bldg.	Building	min.	Minimum
clr.	Clear	misc.	Miscellaneous
col.	Column	(N)	New
CP	Complete penetration weld	N.T.S.	Not to scale
conc.	Concrete	o.c.	On center
C.M.U.	Concrete masonry unit	opng.	Opening
conn.	Connection	OFS	Outside face of stud
CJ	Construction joint	O.T.J.H.	Over top joist hanger
cont.	Continuous	pr.	Pair
dbl.	Double	PW	Plywood
DJ	Double joist	RW	Redwood lumber
dn.	Down	reinf.	Reinforcing
dwgs.	Drawings	req'd.	Required
ea.	Each	sched.	Schedule
E.W.	Each way	S.A.D.	See architectural drawings
EN	Edge nail	S.M.D.	See mechanical drawings
elect.	Electrical	sht.	Sheet
elev.	Elevation	SB	Sill bolt
eq.	Equal	sq.	Square
eulp.	Equipment	std.	Standard
(E)	Existing	symm.	Symmetrical
ext.	Exterior	TJ	Triple joist
ftg.	Footing	TS	Tube steel
GL	Glue-laminated lumber	typ.	Typical
gyp. bd.	Gypsum board	U.O.N.	Unless otherwise noted
ht.	Height	vert.	Vertical
horiz.	Horizontal	WA	Wedge anchor
info.	Information	WP	Work point
int.	Interior	V.I.F.	Verify in field
jt.	Joint		

FOUNDATIONS

THE SOIL REPORT APPLICABLE TO THIS PROJECT SITE IS BY HARDING LAWSON ASSOCIATES, PROJECT NO. 279401, DATED DEC. 22, 1994 AND IS AVAILABLE FOR REVIEW AT THE ARCHITECT'S OFFICE.

FOOTINGS SHALL BEAR ON STIFF NATIVE SOILS CONSISTING OF STIFF RED-BROWN AND BROWN SILTY CLAY OR WELL COMPACTED ENGINEERED FILL.

FOR BIDDING PURPOSES, THE ELEVATION OF THE BOTTOM OF FOOTINGS SHALL BE AS INDICATED ON THE FOUNDATION PLANS AND ON DETAILS. THESE FOOTING DEPTHS ARE MINIMUM AND SHALL IN NO CASE BE LESS THAN -3'-0". THEY SHALL BE SUBJECT TO APPROVAL BY THE SOILS ENGINEER DURING FOUNDATION EXCAVATION AND CONSTRUCTION.

SOIL PRESSURES UNDER FOOTINGS AS DESIGNED DO NOT EXCEED 2000 PSF DUE TO DEAD LOAD, NOR EXCEED 3000 PSF DUE TO DEAD LOAD PLUS LIVE LOAD, NOR EXCEED 4000 PSF DUE TO COMBINED DEAD LOAD PLUS DESIGN LIVE LOAD PLUS GOVERNING DESIGN WIND OR SEISMIC LOAD.

WHERE FOUNDATION WALL BACKFILL IS NECESSARY, THE BACKFILL SHALL BE PLACED SIMULTANEOUSLY ON EACH SIDE OF WALL, AND THE LEVEL ON ONE SIDE SHALL NOT EXCEED THE OTHER SIDE BY MORE THAN 6" DURING THIS OPERATION.

FOOTINGS SHALL BE CENTERED UNDER BEARING WALLS ABOVE UNLESS OTHERWISE NOTED.

SEE ARCHITECTURAL, PLUMBING, MECHANICAL, ELECTRICAL AND ANY OTHER INCLUDED DRAWINGS, AND CONSULT WITH THE RESPECTIVE TRADES FOR VERIFICATION OF ALL ITEMS SHOWN OR NOT SHOWN ON STRUCTURAL PLANS PRIOR TO POURING CONCRETE FOOTINGS AND FLOOR SLABS.

VERIFY LOCATIONS FOR OPENINGS OR PENETRATIONS THROUGH CONCRETE, CONCRETE CURBS, FLOOR DEPRESSIONS, FLOOR SLOPES AND DRAINS, INSERTS, ETC.

ALL COMPACTED FILL TO BE TESTED IN ACCORDANCE WITH THE REQUIREMENTS OF T24 SEC. 2903(a). ALL COMPACTED FILL MATERIAL AND COMPACTION METHOD MUST BE SUPERVISED AND APPROVED BY THE GEOTECHNICAL ENGINEER.

CONCRETE

NOTIFY THE ARCHITECT, STRUCTURAL ENGINEER, AND O.S.A. A MINIMUM OF 48 HOURS PRIOR TO COMMENCEMENT OF CONCRETING OPERATIONS.

ALL CONCRETE SHALL BE REINFORCED UNLESS NOTED: "NOT REINFORCED."

THE REBAR SUBCONTRACTOR SHALL FURNISH AND INSTALL TWENTY TONS OF VARIOUS SIZES AND SHAPES OF REINFORCING BARS TO BE PLACED IN LOCATIONS PRESCRIBED BY THE STRUCUTRAL ENGINEER DURING CONSTRUCTION. THE UNIT PRICE PER TON FOR MORE OR LESS THAN THE TONS SPECIFIED ABOVE SHALL BE INCLUDED IN THE BID DOCUMENTS.

SEE SPECIFICATIONS FOR THE REQUIREMENTS IN THE PRODUCTION, TESTING, AND INSTALLATION OF CONCRETE.

THE MAXIMUM PERMISSIBLE WATER-CEMENT RATIOS FOR CONCRETE, SHALL BE PER TABLE 5.4 ACI 318-89.

SEE ARCHITECTURAL DRAWINGS FOR LOCATION, EXTENT, AND REINFORCEMENT OF EXTERIOR WALKS AND PAVMENT.

SEE ARCHITECTURAL DRAWINGS FOR SURFACE FEATURES SUCH AS CHAMFERS, REVEALS, ETC.

REINFORCEMENT SHALL BE ASTM A615-40 FOR #4 AND SMALLER, AND A615-60 FOR #5 AND LARGER, WITH BAR MARKS LEGIBLY ROLLED INTO THE SURFACE INDICATING SIZE, TYPE OF STEEL, AND YIELD STRENGTH DESIGNATION.

CONCRETE SHALL TEST NOT LESS THAN 3000 PSI AT 28 DAYS, FOR STRUCTURAL AND FOUNDATION ELEMENTS WITH 3/4" MAX. AGGREGATE. FLOOR SLABS-ON-GRADE SHALL TEST NOT LESS THAN 2500 PSI AT 28 DAYS WITH 3/4" MAX. AGGREGATE, UNLESS OTHERWISE NOTED ON STRUCTURAL DRAWINGS.LAP ALL BARS 48 DIAMETERS AT SPLICES. STAGGER SPLICES WHEREVER POSSIBLE. VERTICAL WALL BARS SHALL EXTEND INTO FOOTINGS, BUT MAY BE DOWELLED WITH 48 DIAMETER LAPS OF SAME SIZE BARS.

BASE PLATE ANCHOR BOLTS SHALL BE LOCATED INSIDE THE FOOTING OR WALL REINFORCING CAGE, UNLESS OTHERWISE NOTED. IF THE ANCHOR BOLTS FALL OUTSIDE THE REINFORCING CAGE, THEN ADD #4 RECTANGULAR CLOSED TIES AT THE TOP AND BOTTOM OF ANCHOR BOLTS, WIRE-TIED TO ANCHOR BOLTS.

REINFORCEMENT, ANCHOR BOLTS, PIPE SLEEVES AND OTHER INSERTS SHALL BE POSITIVELY SECURED IN PLACE BEFORE CONCRETE IS POURED.

REBARS WELDED TO STRUCTURAL STEEL SHALL BE SUPPLIED BY REBAR SUBCONTRACTOR AND ALL WELDING SHALL BE DONE BY STRUCTURAL STEEL SUBCONTRACTOR. ALL BARS THAT ARE WELDED SHALL MEET THE REQUIREMENTS OF ASTM A706.

BAR COVERAGE TO FACE OF BAR, EXCEPT AS OTHERWISE SHOWN, SHALL BE:

3"	WHERE CONCRETE IS POURED AGAINST EARTH OR IN CONTACT WITH GROUND.	
2"	FOR BARS LARGER THAN #5, WHERE CONCRETE SURFACES ARE EXPOSED TO EARTH OR TO WEATHER AFTER REMOVAL OF FORMS	
1-1/2"	FOR COLUMN SPIRALS OR TIES	UNLESS GOVERNED ABOVE BY EXPOSURE TO WEATHER OR AS NOTED ON DETAILS.
1-1/2"	FOR STIRRUPS OF BEAM	
1"	FOR WALL BARS (DOUBLE MAT)	
3/4"	FOR STRUCTURAL SLAB BARS, TOP AND BOTTOM	

ALL CONCRETE CURBS ARE 6" HIGH, UNLESS OTHERWISE NOTED. ALL TOILET ROOM STUD WALLS SHALL HAVE CONCRETE CURBS, UNLESS OTHERWISE NOTED.

FOR SLABS-ON-GRADE, SHALL BE REINFORCED AS SHOWN ON STRUCTURAL PLANS. LOCATIONS OF CONSTRUCTION JOINTS MUST BE APPROVED BY THE ARCHITECT. ALSO, ANY DEVIATION IN THE POURING OF THE CONCRETE SLAB FROM THE METHOD DESCRIBED ON THE STRUCTURAL CONSTRUCTION JOINT DETAIL SHALL BE REVIEWED BY THE STRUCTURAL ENGINEER PRIOR TO POURING THE CONCRETE SLAB. A LETTER TO THE STRUCTURAL ENGINEER IS REQUIRED, STATING THE REQUESTED CHANGE AND DESCRIBING THE PROPOSED METHOD. THE CONTRACTOR WILL ASSUME ALL RESPONSIBILITY FOR THE CHANGED CONSTRUCTION JOINT DETAIL.

THE SURFACE OF ALL CONSTRUCTION JOINTS, INCLUDING EXISTING CONSTRUCTION, SHALL BE CLEANED AND ROUGHENED BY REMOVING THE ENTIRE SURFACE AND EXPOSING THE AGGREGATE SOLIDLY EMBEDDED IN MORTAR MATRIX, WITH AGGREGATE TO BE EXPOSED TO 1/4" AMPLITUDE.

ADMIXTURES CONTAINING CALCIUM CHLORIDE SHALL NOT BE USED.

MODIFIED CONCRETE MIX AT HORIZONTAL CONSTRUCTION JOINTS WHERE CONDITIONS MAKE PUDDLING DIFFICULT AND/OR WHERE REINFORCING IS CONGESTED. MODIFIED CONCRETE MIX SHALL CONTAIN 50 PERCENT OR LESS OF COARSE AGGREGATES SPECIFIED IN CONCRETE MIX DESIGN.

CURING UNFORMED SURFACES:

1. CURE FOR SEVEN DAYS BY MAINTAINING THE CONCRETE ABOVE 50 DEGREES F. AND IN A MOIST CONDITION, KEEPING THE SURFACE CONTINUOUSLY WET BY COVERING WITH WATER OR BY CONTINUOUS WATER-FOG SPRAY.
2. APPLY MEMBRANE-FORMING CURING COMPOUND TO DAMP CONCRETE SURFACES IMMEDIATELY AFTER THE COMPLETION OF THE MOIST-CONDITIONING PERIOD. APPLY UNIFORMLY IN TWO-COAT CONTINUOUS OPERATION BY POWER-SPRAY EQUIPMENT, IN ACCORDANCE WITH MANUFACTURER'S DIRECTIONS. RECOAT AREAS WHICH ARE SUBJECT TO HEAVY RAINFALL WITHIN THREE HOURS AFTER INITIAL APPLICATION. MAINTAIN CONTINUITY OF COATING AND REPAIR DAMAGE DURING CURING PERIOD. THE CURING PERIOD IS 28 DAYS LONG.
3. MAKE TESTS TO CONFIRM THAT MEMBRANE-FORMING CURING COMPOUND IS SATISFACTORY BY PLACING 20 FOOT BY 20 FOOT SHEET OF POLYETHYLENE BOBBITTVIEW WITH IN BAFFLE ON TOP OF THE CONCRETE SURFACE. DETERMINE IF WATER VAPOR HAS MIGRATED FROM THE CONCRETE AND CONDENSED ON THE UNDERSIDE OF THE POLYETHYLENE. MAKE ONE TEST FOR THE AREA OF CONCRETE POURED EACH DAY.
4. IF CONDENSATION APPEARS, THEN RE-APPLY MEMBRANE-FORMING COMPOUND AND RETEST FOR VAPOR MIGRATION.

CURING FORMED SURFACES: CURE FORMED SURFACES BY MOIST CURING WITH FORMS IN PLACE FOR FULL CURING PERIOD OR UNTIL FORMS ARE REMOVED. WHEN FORMS ARE REMOVED, CONTINUE CURING BY METHODS SPECIFIED ABOVE, AS APPLICABLE, FOR FULL CURING PERIOD.

SHORING AND RESHORING: CONTRACTOR IS RESPONSIBLE FOR THE SHORING AND RESHORING OF ALL NECESSARY ELEMENTS. THIS INCLUDES THE DETERMINATION, DESIGN, INSTALLATION AND REMOVAL. SHORING AND RESHORING OF SLABS AND BEAMS SHALL NOT BE REMOVED UNTIL CONCRETE IS 28 DAYS OLD. SHORING AND RESHORING OF CONCRETE SLAB AND/OR BEAMS SHALL NOT BE REMOVED UNTIL CONCRETE IS 28 DAYS OLD.

THE AGGREGATES IN THE CONCRETE FOR THIS PROJECT SHALL BE COMPOSED OF LOCALLY AVAILABLE FINE AND COARSE AGGREGATES OF THE TYPE CALLED FOR IN THE SPECIFICATIONS. DUE TO THE NATURE OF CONCRETE IN GENERAL, AND CONSIDERING THE SOURCE AND PERFORMANCE HISTORY OF THESE LOCAL AGGREGATES, CONCRETE CRACKING IS UNAVOIDABLE. IF THE OWNER AND/OR ARCHITECT DETERMINE THAT REDUCED CRACKING IS REQUIRED, THEY SHALL NOTIFY THE STRUCTURAL ENGINEER SO THAT LOW SHRINKAGE AGGREGATES WITH A HISTORY OF REDUCED CRACKING CAN BE SPECIFIED.

SEE MECHANICAL AND/OR ARCHITECTURAL DRAWINGS FOR LOCATION, SIZE, AND DETAILS OF CONCRETE EQUIPMENT PADS.

CAMBER FOR MEMBERS: ALL MEMBERS WITH A SPAN-TO-DEPTH RATIO GREATER THAN 10 SHALL BE CAMBERED. CAMBER SHALL BE AS SHOWN ON STRUCTURAL DRAWING OR, IF NOT SHOWN, SHALL BE L/360, WHERE "L" IS THE CLEAR SPAN BETWEEN SUPPORTS. ALL CANTILEVER SPANS SHALL BE CAMBERED UPWARD AT THE CANTILEVER END L/180 U.O.N., IS THE CLEAR CANTILEVER SPAN FROM THE SUPPORT.

CONCRETE UNIT MASONRY

CONCRETE BLOCKS SHALL CONFORM TO REQUIREMENTS OF ASTM C90-GRADE N-I SPECIFICATION FOR HOLLOW LOAD BEARING LIGHTWEIGHT AGGREGATE CONCRETE MASONRY UNITS. THE ASSUMED ULTIMATE COMPRESSIVE STRENGTH (F'm) OF THE CONCRETE MASONRY IS 1500 PSI. SPECIAL INSPECTION IS REQUIRED PER CBC SECTION 2416(b), TITLE 24

MORTAR SHALL CONFORM TO ASTM C270-80 PROPORTION SPECIFICATION OR ASTM C387-75B, AND CBC TABLE NO. 24-A FOR TYPE S.

MORTAR SHALL TEST NOT LESS THAN 1500 PSI AT 28 DAYS.

GROUT SHALL CONFORM TO T24 PART-2 SEC. 2403(b).

GROUT SHALL TEST NOT LESS THAN 2000 PSI AT 28 DAYS.

GROUT AGGREGATE SHALL CONFORM TO THE REQUIREMENTS SET FORTH IN UBC STANDARD NO. 24-23.

REINFORCEMENT SHALL BE ASTM A615-40 #4 AND SMALLER, AND A615-60 FOR #5 AND LARGER.

ALL MASONRY BLOCK CELLS SHALL BE FILLED SOLID WITH GROUT.

ALL HORIZONTAL BARS SHALL BE PLACED IN BOND BEAM UNITS.

LAY ALL CONCRETE BLOCK UNITS IN RUNNING BOND.

PROVIDE OPEN END BLOCK UNITS WHEREVER POSSIBLE.

USE LOW LIFT GROUT CONSTRUCTION PER T24 SEC. 2404(f)1.2.B

UNITS SHALL BE LAID A MAXIMUM OF 2'-0" BEFORE GROUTING.

CARPENTRY

SILLS ON CONCRETE SHALL BE NO. 2 GRADE, CLOSE GRAIN REDWOOD, OR PRESSURE-TREATED DOUGLAS FIR MIN. NO. 2 GRADE WITH AWPB STAMP, 3" THICK AT STRUCTURAL PLYWOODSHEATHED WALLS AND 2" MINIMUM THICK ELSEWHERE. THEY SHALL BE ANCHORED WITH 5/8" DIA. x14" MACHINE BOLTS OR LESS OTHERWISE NOTED. (HOLES MAY BE 1/16" OVERSIZE) WITH A BOLT WITHIN 9" OF EACH END OF EACH STICK AND SPACED NOT OVER 48" O.C. BETWEEN. SEE STRUCTURAL DETAILS FOR SPECIFIC SPACING OF ANCHOR BOLTS WHICH MAY BE NOTED AS LESS THAN 48" O.C. THERE SHALL BE AT LEAST 2 BOLTS IN EACH STICK. WHERE NOTCHES FOR PIPES, ETC., EXCEED 1/3 THE WIDTH OF THE SILL, PLACE A BOLT WITHIN 9" OF EACH SIDE OF NOTCH. TIEDOWN BOLTS SHALL NOT BE CONSIDERED AS SILL BOLTS. SILLS SHALL BE BEDDED IN 1:2 MORTAR (1 PART CEMENT/2 PARTS SAND) 1/2" THICK. ALL POST SHALL BE FULL HEIGHT OF BUILDING AND SHALL BE SOLID BLOCKED AT FRAMING LEVELS. CUTS AND HOLES IN SILL PLATES SHALL BE RETREATED PER AWPA M-84.

FRAMING LUMBER: DOUGLAS FIR, NORTH REGION MANUFACTURED AND GRADED IN ACCORDANCE WITH THE WEST COAST LUMBER INSPECTION BUREAU "STANDARD GRADING RULES NO. 16" EFFECTIVE SEPTEMBER 1, 1970 AND REVISED JANUARY 1, 1988.

STRUCTURAL LIGHT FRAMING:	NO. 1 (PARA. 124) 2" TO 4" THICK; 2" TO 4" WIDE
STRUCTURAL JOISTS AND PLANKS:	NO. 1 (PARA. 123) 2" TO 4" THICK; 6" AND WIDER
BEAMS:	NO. 1 STRUCTURAL, FREE OF HEART CENTER (PARA. 130) 5" AND THICKER; WIDTH MORE THAN 2" GREATER THAN THICKNESS
POST:	NO. 1 STRUCTURAL (PARA. 131)
STUDS:	2x4 OR 3x4 NO. 2 (PARA. 122) 2x6 AND LARGER NO. 1 (PARA. 123)
DECK:	D.F. SELECT DEX

BLOCKING AND BRIDGING - PROVIDE AS FOLLOWS:

A. 2" SOLID BLOCKING BETWEEN JOISTS AND RAFTERS OVER SUPPORT.
B. 2"x3" (MIN) CROSS BRIDGING BETWEEN JOISTS AND RAFTERS NOT OVER 8'-0" O.C. NOR MORE THAN 8'-0" FROM SUPPORT. CROSS BRIDGING TO BE INSTALLED AFTER SHEATHING IS PUT DOWN. 2x FULL HEIGHT BLOCKING MAY BE USED IN LIEU OF BRIDGING. ALL FLOOR JOISTS TO HAVE FULL DEPTH BLOCKING.
C. OMIT CROSS BRIDGING BETWEEN CEILING JOISTS AND RAFTERS 2x8 AND SMALLER.
D. CONTINUOUS 2" HERRINGBONE BRIDGING, SLOPE 3-IN-12, AT MID-HEIGHT OF STUDS OR SO SPACED THAT UNBRACED LENGTH OF STUDS SHALL NOT EXCEED 8'-0" EXCEPT WHERE WALL FINISH OR PLYWOOD SHEATHING AT SHEAR WALLS CALLS FOR SOLID HORIZONTAL BLOCKING.

WHERE JOISTS SPAN BETWEEN CONCRETE OR MASONRY WALLS, STEEL PLATE ANCHOR CONNECTORS SHALL BE PROVIDED AT EACH END OF THE SAME JOIST. SUCH CONNECTED JOISTS SHALL NOT BE SPACED OVER 48" ON CENTER. WHERE A JOIST OR STUD IS PLACED AGAINST CONCRETE OR MASONRY WALL, BOLT TO WALL WITH 3/4" DIAMETER ANCHOR BOLTS NOT OVER 48" O.C.

DOUBLE TOP PLATES OF EXTERIOR WALLS SHALL NOT BE CUT TO LAP THE TOP PLATES OF INTERSECTING WALLS EXCEPT AT EXTERIOR WALL CORNERS OR AS OTHERWISE NOTED ON DRAWINGS.

PIPES EXCEEDING ONE-THIRD OF THE PLATE WIDTH SHALL NOT BE PLACED IN PARTITIONS USED AS BEARING OR SHEAR WALLS, UNLESS OTHERWISE DETAILED OR COMPLETELY FURRED CLEAR OF THE STUDS. PIPES SHALL PASS THROUGH THE CENTER OF THE PLATES USING NEATLY BORED HOLES. NO NOTCHING WILL BE ALLOWED.

LAG SCREWS SHALL BE SCREWED (NOT DRIVEN) INTO PLACE. DRILL HOLE SAME 60-75% DIAMETER OF SHANK THREAD. USE PLATE WASHERS AS REQUIRED FOR SAME BOLT SIZE

BOLTS IN WOOD SHALL BE MACHINE BOLTS UNLESS OTHERWISE NOTED. ALL MACHINE BOLTS SHALL HAVE CUT THREADS. BOLTS WITH UPSET THREADS ARE NOT ALLOWED.

BOLT HOLES IN WOOD AND STEEL SHALL BE THE DIAMETER OF THE BOLT PLUS 1/16". PROVIDE SQUARE PLATE WASHER UNDER HEAD AND NUT WHERE BEARING IS AGAINST WOOD. WASHER WILL NOT BE REQUIRED UNDER HEAD OF CARRIAGE BOLTS. LENGTH OF THREAD SHALL BE SUCH THAT THREADS DO NOT BEAR AGAINST WOOD OR STEEL. ALL NUTS SHALL BE TIGHTENED WHEN PLACED AND RETIGHTENED AT COMPLETION OF THE JOB OR IMMEDIATELY BEFORE CLOSING WITH FINISH CONSTRUCTION.

BOLT DIAMETER	SQ. STEEL PLATE WASHER	BOLT DIAMETER	SQUARE STEEL PLATE WASHER
1/2"	2 x 2 x 1/4"	7/8"	3-1/2 x 3-1/2 x 3/8"
5/8"	2-1/2 x 2-1/2 x 1/4"	1"	3-1/2 x 3-1/2 x 3/8"
3/4"	3 x 3 x 5/16"	1-1/8"	4 x 4 x 7/16"
		1 -1/4"	4-1/2 x 4-1/2 x 1/2"

MALLEABLE IRON WASHERS MAY BE USED IN LIEU OF SQUARE STEEL PLATE WASHERS. ALL ANCHOR BOLTS AND SILL BOLTS SHALL BE SECURED IN PLACE PRIOR TO POURING CONCRETE FOOTINGS.
ALL METAL CONNECTIONS TO BE SIMPSON, UNLESS OTHERWISE NOTED.

PLYWOOD SHEATHING

WHERE NOTED ON STRUCTURAL PLANS, ROOFS, FLOORS, EXTERIOR SHEAR WALLS AND INTERIOR SHEAR WALLS SHALL BE SHEATHED WITH DOUGLAS FIR PLYWOOD, STRUCTURAL I OR BETTER, WITH EXTERIOR GLUE AND APA STAMP WITH THICKNESS.

ALL PLYWOOD SHEATHING USED STRUCTURALLY SHALL EXTEND CONTINUOUSLY BEHIND ALL FINISH. WHERE IT IS TO BE PLASTERED, IT SHALL BE PROTECTED BY AN UNBROKEN LAYER OF MOISTURE-TIGHT PAPER UNDER LATHING.

IN GENERAL, PLYWOOD SHEETS SHALL BE 4'-0" x 8'-0". THE LONG DIMENSION MAY BE LAID EITHER HORIZONTALLY OR VERTICALLY AT WALLS WITH ALL PANELS 12" WIDE MINIMUM AND STAGGERED HORIZONTAL JOINTS. ROOF AND FLOOR SHEETS SHALL BE LAID WITH FACE PLIES ACROSS JOISTS OR FRAMING MEMBERS AND WITH END JOINTS STAGGERED 4'-0" WITH ALL PANELS 24" WIDE MINIMUM. ALL PLYWOOD JOINTS SHALL BE ACCURATELY CENTERED ON SUPPORTING ELEMENTS, INCLUDING BLOCKING. BLOCKING BETWEEN STUDS SHALL BE 3x STUD DEPTH. BLOCKING BETWEEN JOISTS FOR PLYWOOD EDGE NAILING SHALL BE 2x4 MINIMUM FLAT BLOCKING, EXCEPT WHERE DETAILED OTHERWISE. WHERE NAILING IS @ 3" O.C. OR CLOSER, PROVIDE 4x4 MINIMUM BLOCKING BETWEEN JOISTS, LEDGERS SHALL BE 4x SAME DEPTH AS JOIST AND STUDS SHALL BE 3x. ALL ROOF, FLOOR AND WALL PLYWOOD SHALL BE BLOCKED. USE 3x STUD FOR ALL VERTICAL WALL JOINTS WHERE SHEATHING IS ON BOTH SIDES, WITH STAGGERED NAILING. NO CONTINUOUS HORIZONTAL JOINTS ARE ALLOWED IN SHEAR WALL, THE PLYWOOD PANELS MUST BE STAGGERED.

PLYWOOD SHEATHING	PW NAILING LOCATION (SEE PLANS & STRUCTURAL SECTIONS)	PW AT LOCATIONS AS INDICATED ON STRUCTURAL DRAWINGS.	
1/2" THICKNESS @ ROOF	AT ALL EDGES OR SHEET WHERE CALLED OUT AS "EDGE NAILING" (EN) U.O.N.	10d @ 4" O.C.	
3/4" THICKNESS @ FLOOR	AT ALL OTHER CONTACTS	10d @ 12" O.C. U.O.N.	
1/2" THICKNESS @ WALLS	UNLESS OTHERWISE NOTED	10d @ 10" O.C. FLOOR	
	AT DOUGLAS FIR SILLS	10d @ 4" O.C.	
	AT REDWOOD SILLS	10d @ 3" O.C.	
	AT POST WITH HOLDOWN	10d @ 4" O.C.	

NAILING

ALL NAILS SHALL BE COMMON WIRE NAILS. WHERE NAILS TEND TO SPLIT THE WOOD, NAIL HOLES SHALL BE SUB-DRILLED.

NAILING SCHEDULE OF MINIMUM PERMISSIBLE CONNECTION

DETAILS		FASTENING	
STUDS TO BEARING	2x6 AND SMALLER	2-10d	TOENAILS EACH SIDE (3-10d TOENAILS EACH SIDE AT EXTERIOR WALLS WHEN HEIGHT OF STUD EXCEEDS 13'-4")
	2x8 AND LARGER	3-10d	TOENAILS EACH SIDE TOP & BOTTOM AT EXTERIOR WALLS (3-16d TOENAILS EACH SIDE TO REDWOOD SILL WHEN STUD EXCEEDS 20'-0")
SOLE PLATES (ON SHEATHING)	PERPENDICULAR TO JOISTS	2-20d	EACH JOIST
	PARALLEL TO JOIST	20d	@ 8" O.C. STAGGERED
DOUBLE 2" TOP PLATES (USE 30d FOR 3" PLATES)	LOWER PLATE TO STUD	2-20d	FOR 2x6 STUDS OR SMALLER; 3-30d FOR 2x8; 2-20d FOR 3x4 STUDS
	UPPER TO LOWER STAGGERED	16d	@ 12" O.C. (MIN.) LAP 4'-0" WITH 16-16d EACH LAP. SEE PLANS FOR SPECIAL CONDITION.
JOIST OR RAFTERS	LAP AT INTERSECTIONS	3-16d	
	TO BEARING TO SIDE OR EDGE OF STUD	2-10d	TOENAILS EACH SIDE
		3-16d	FOR 8" DEPTH JOIST OR LESS ADD 1-16d FOR EACH ADDITIONAL 4" IN DEPTH FOR JOIST
BLOCKING	TO PARALLELING MEMBERS (PLATES, ETC.)	16d	@ 12" O.C.
	ALL LAPS (12" MIN.)	4-16d	
	TO JOISTS OR RAFTERS	2-10d	TOENAILS EACH SIDE EACH END
	TO BEARINGS	2-10d	TOENAILS EACH SIDE
HERRINGBONE BRIDGING	TO STUDS	2-10d	
CROSS BRIDGING	TO JOISTS OR RAFTERS	2-8d	
MULTIPLE STUDS	EACH LAYER	16d	@ 8" O.C.
BUILT-UP BEAMS (MULTIPLE JOISTS)	EACH LAYER	16d	@ 8" O.C. FOR BEAMS LESS THAN 10" IN DEPTH ONLY
		1/2"	DIAMETER BOLTS @ 24" O.C. STAGGERED FOR BEAMS 10" OR GREATER IN DEPTH
DOUBLE JOIST UNDER PARTITIONS	WHERE NOT BLOCKED	16d	@ 8" O.C.
	WHERE BLOCKED APART	3-16d	EACH BLOCK EACH SIDE (BLOCKS 2x @ 24" O.C.)

USE OF MACHINE NAILING IS SUBJECT TO A SATISFACTORY JOBSITE DEMONSTRATION FOR EACH PROJECT AND THE APPROVAL BY THE PROJECT ARCHITECT OR STRUCTURAL ENGINEER AND THE OFFICE OF THE STATE ARCHITECT. THE APPROVAL IS SUBJECT TO CONTINUED SATISFACTORY PERFORMANCE. MACHINE NAILING WILL NOT BE APPROVED IN 5/16" PLYWOOD. IF NAILHEADS PENETRATE THE OUTER PLY MORE THAN WOULD BE NORMAL FOR A HAND HAMMER OR IF MINIMUM ALLOWABLE EDGE DISTANCES ARE NOT MAINTAINED THE PERFORMANCE WILL BE DEEMED UNSATISFACTORY.

TRUSS JOIST

ALL PREFABRICATED TRUSS JOISTS SHALL BE TRUS JOIST MCMILLAN UNLESS OTHERWISE NOTED.

TJI JOIST SERIES SHALL CONFORM TO NATIONAL RESEARCH BOARD REPORT NO. NRB-200. FLANGES SHALL BE MICRO-LAM LUMBER MANUFACTURED IN ACCORDANCE WITH NATIONAL RESEARCH BOARD REPORT NO. NRB-126. WEB SHALL BE PLYWOOD CONFORMING TO U.S. COMMERCIAL STANDARD PS-1-

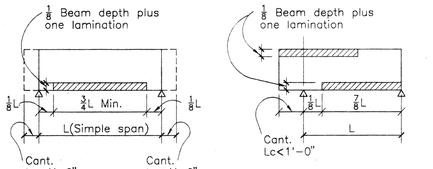

SIMPLE SPAN BEAM

BEAM WITH ONE END CANTILEVER

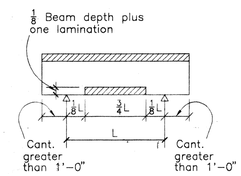

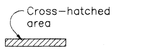

Portions of beam where there shall be 6" min. end joint spacing in adjacent laminations per voluntary product standard PS56-73.

BEAM WITH BOTH ENDS CANTILEVER

(23) SPACING OF END JOINTS IN GLUE-LAMINATED BEAMS

TWD020

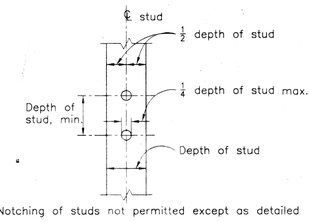

Notching of studs not permitted except as detailed

(19) HOLES IN STUDS

TWD010

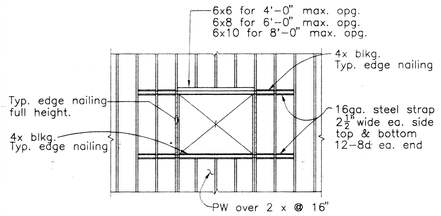

(18) TYPICAL MECH. AND ELECT. PANEL OPENING IN PW SHEAR WALL

TWD010

HEADER SCHEDULE	
D (bm. depth)	W (opg. width)
7½"	4' to 8'
9½"	8' to 10'
11½"	10' to 12'

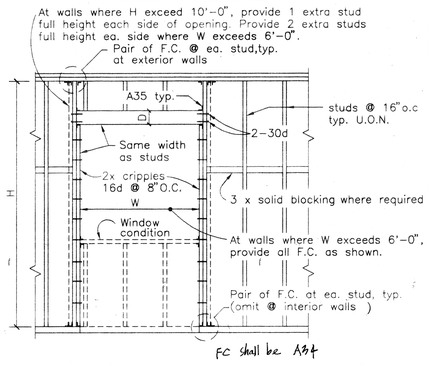

(14) TYPICAL FRAMING AT DOORS AND WINDOWS

TWD006

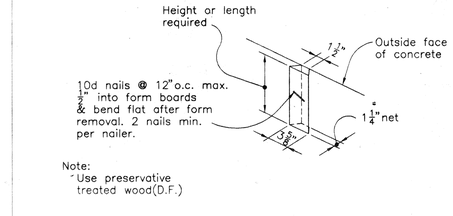

(10) BUILT-IN NAILER IN CONCRETE

CON016

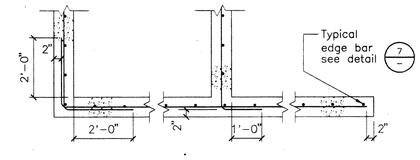

(5) SINGLE MAT TYPICAL REINFORCEMENT AT WALL AND FOOTING CORNERS

CON004

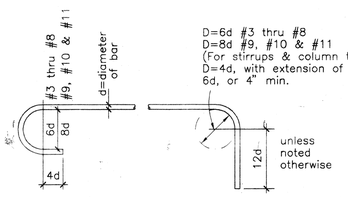

(9) TYPICAL BAR HOOKS AND ANCHOR BOLT HOOKS

CON006

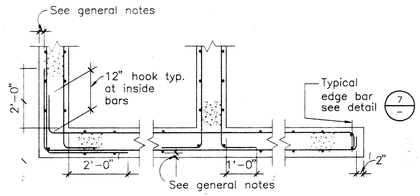

(4) DOUBLE MAT TYPICAL REINFORCEMENT AT WALL AND FOOTING CORNERS

CON005

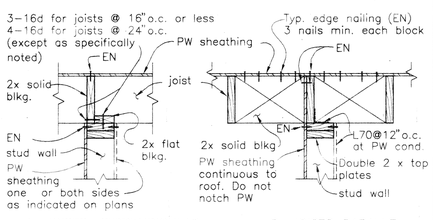

A. JOISTS PERPENDICULAR B. JOISTS PARALLEL

(22) SHEAR WALL SHEATHING CONNECTION

(Unless shown otherwise)

TWD004

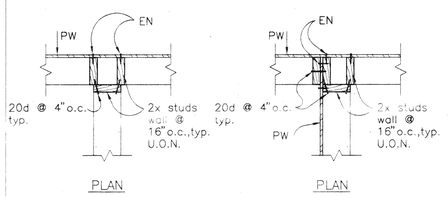

(17) INTERSECTING EXTERIOR STUD WALL FRAMING

TWD011

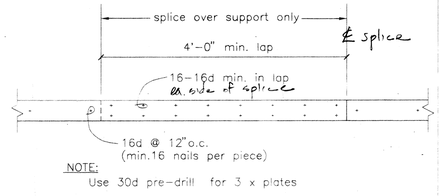

(13) PLAN OF NAILED TOP PLATE SPLICE

TWD008

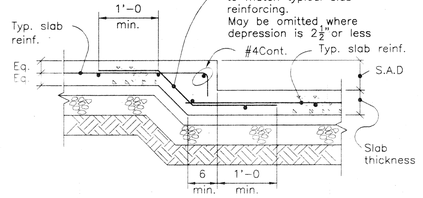

(8) TYP. DEPRESSED SLAB ON GRADE

CON017

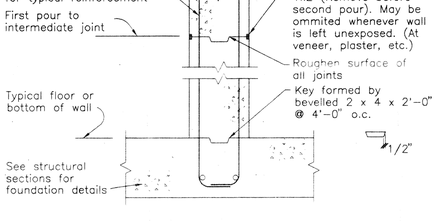

(3) TYPICAL HORZONTAL CONSTRUCTION JOINT

CON007

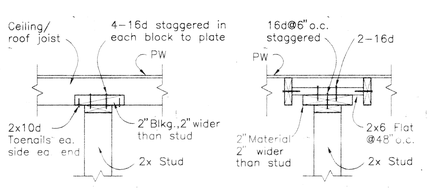

STUDS PERPENDICULAR STUDS PARALLEL

(21) NON-BEARING STUDS TO CEILING OR ROOF JOISTS

TWD004

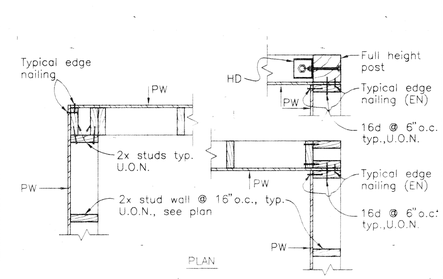

(16) FRAMING AT EXTERIOR STUD WALL CORNERS

TWD001

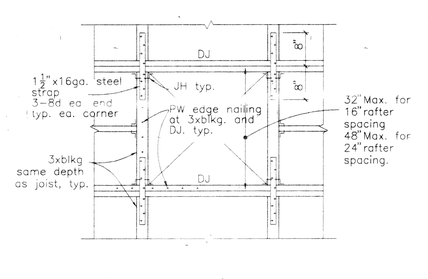

(12) TYP. FRAMING AT ALL OPEN'GS IN ROOF

(Unless shown otherwise)

TWD008

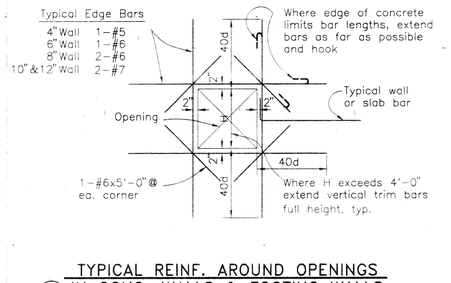

(7) TYPICAL REINF. AROUND OPENINGS IN CONC. WALLS & FOOTING WALLS

Unless otherwise noted on other structural drawings (Similar for openings at supported slabs)

CON014

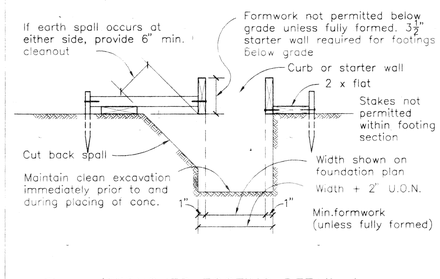

(2) TRENCHED FOOTING DETAIL

Applicable where side forms can be omitted, & approved by the Architect

CON002

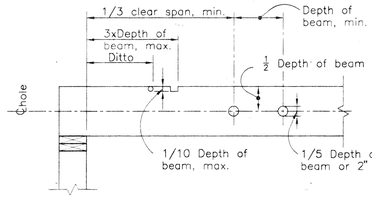

(20) HOLES & NOTCHES IN BEAMS & JOISTS

TWD011

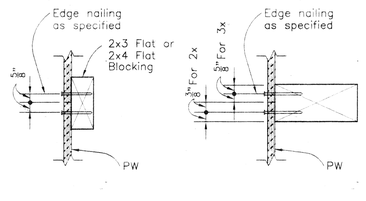

(15) PLYWOOD SPLICE

Note: Predrill if splitting of wood occurs

TWD015

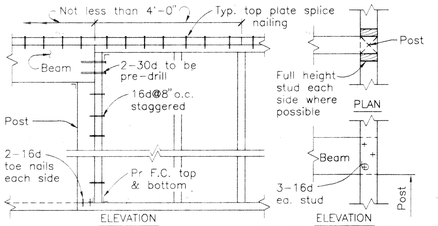

(11) POST AND BEAM CONNECTIONS

TWD007

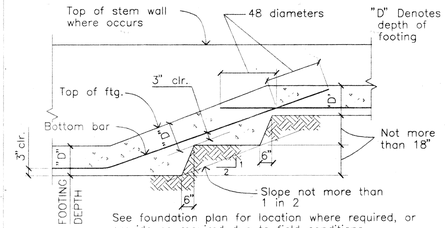

(6) TYPICAL STEPPED FOOTING

TCD003

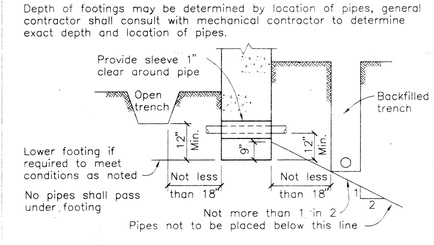

(1) RELATION OF PIPES & TRENCHES TO FTGS.

(Applies also to piers, column footings, etc.)

CON001

FOR PLAN CHECK DATE: OCT 1 97

REVISION	DATE	DESCRIPTION	INITIAL

ISSUE FOR PROGRESS REVIEW	DATE:
ISSUE FOR PLAN CHECK	
ISSUE FOR PERMIT	
ISSUE FOR BID	4/4/96
ISSUE FOR CONSTRUCTION	

SEAL:

REGISTERED PROFESSIONAL ENGINEER ROBERT M. VOYAN No. 2727 Exp. 6/97 STRUCTURAL STATE OF CALIFORNIA

CONSULTANT:

Razzano Associates Inc.
Structural Engineers
366 Fortieth Street
Oakland, CA 94609
(510) 658-7825
FAX (510) 658-7090

INTERACTIVE RESOURCES

ARCHITECTURE • PLANNING • ENGINEERING

117 PARK PLACE
POINT RICHMOND
CALIFORNIA 94801
(510) 236-7435
(FAX.) 232-5325

PROJECT:

STUDENT UNION

Diablo Valley College
321 Golf Club Road
Pleasant Hill, CA. 94523

Contra Costa County
Community College District

STAMP:

N/A N/A GR 4-17-96

APPL. NUMBER:

KEY PLAN:

10/31/97

SHEET TITLE:

TYPICAL DETAILS

SCALE	
PROJ. NO.	A94087.04
PREPARATION AND REVIEW	
PURPOSE	PERSONAL/INITIAL / DATE
DRAWN BY	PAL 04/28/95
PROJ. MGR.	GYN
PEER REVIEW	XXX XX/XX/XX

SHEET NUMBER:

S1.2

NUMBER: OF:

19960329 J:\94082\94082T01 1"=1'-0"

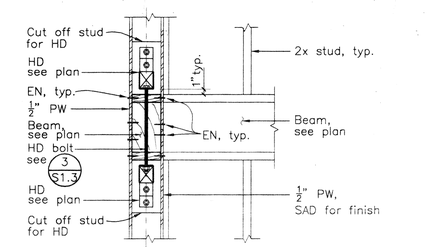

19 SIMPSON HOLDOWN DETAIL AT FLOOR

TWD020

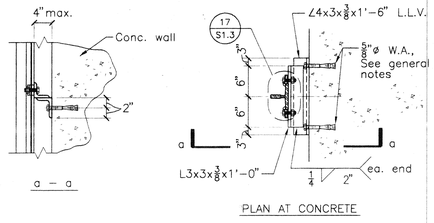

15 ELEVATOR GUIDE RAIL BRACKET

ERTD07

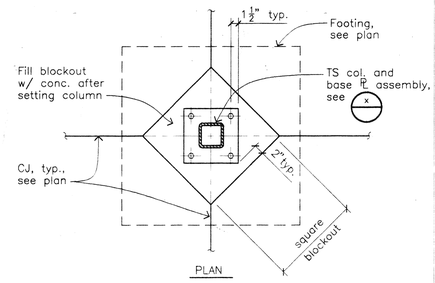

10 TYPICAL BLOCKOUT DETAIL

TCD021

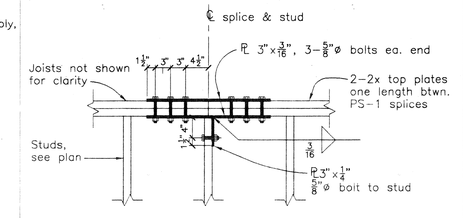

8 PS–1 BOLTED TOP PLATE SPLICE

TWD027

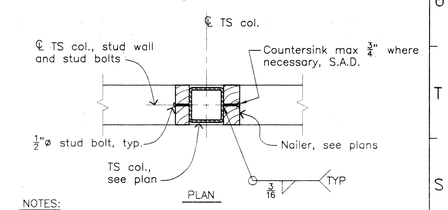

NOTES:
1. Provide stud bolts @16"o.c. at all shear wall locations.
2. Provide stud bolts @24"o.c., typ. u.o.n.
3. See plans for size of walls and nailers

4 TYPICAL STUD BOLTS TO TS COL.

TSD005

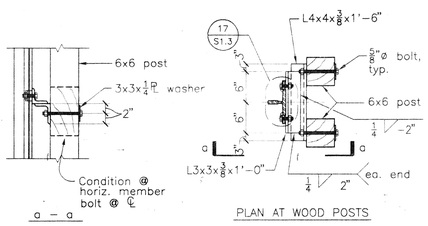

18 ELEVATOR GUIDE RAIL BRACKET

ERTD06

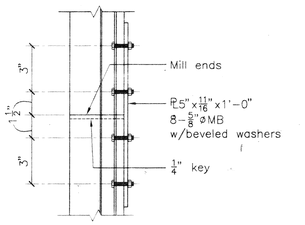

14 TYPICAL ELEVATOR GUIDE RAIL SPLICE

ERTD01

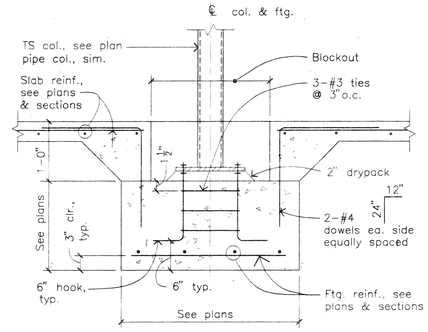

At interior non–bearing and non–sheathed walls with no curb, power–driven stud, 1/4"ø with 1 1/4" penetration into concrete, shot thru 2"ø x 12 ga. washers @ 32" o.c. max. in lieu of typical 5/8"ø x 8"bolts @ 48"o.c., where curb occurs, typical sill bolts be 5/8"ø x 14" @ 48"o.c.

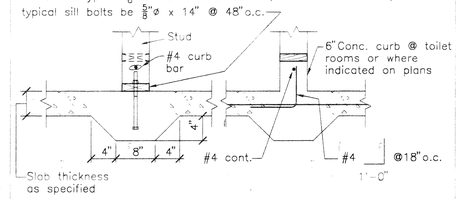

7 NON–BEARING STUDS ON SLAB ON GRADE (U.N.O.)

TWD014

Note:
Head & washer shall be let–in 1/2" max. where they interfere with architectural finish S.A.D.

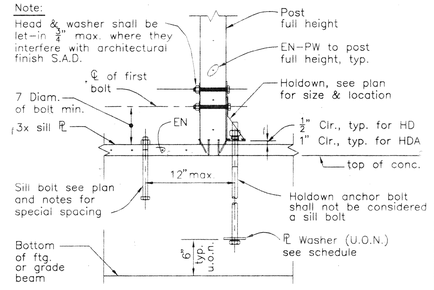

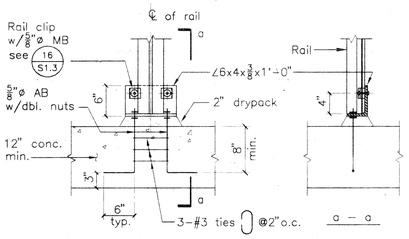

17 TYPICAL ELEVATOR RAIL BASE DETAIL

ERTD05

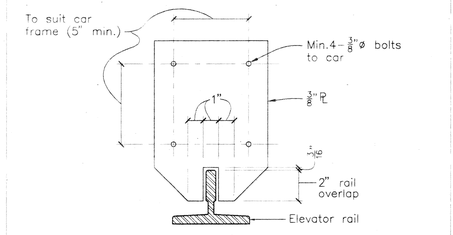

13 TYPICAL ELEVATOR GUIDE RAIL SAFETY GUIDE PLATE

ERTD02

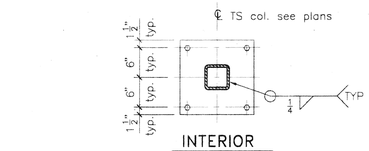

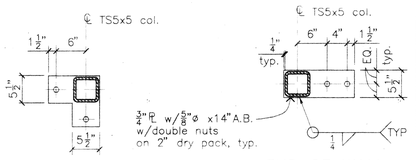

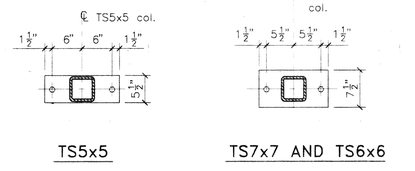

9 TYPICAL BASE PLATE DETAILS

TWD026

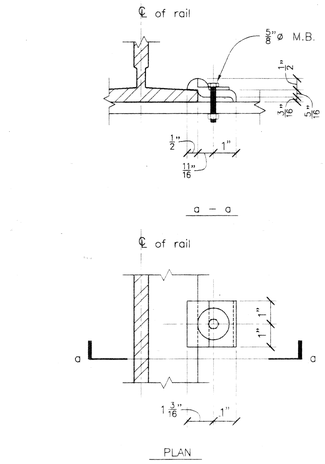

16 ELEVATOR GUIDE RAIL CLIP DETAIL

ERTD03

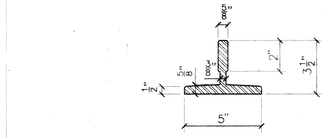

12 15LB. ELEVATOR GUIDE RAIL DETAIL

ERTD04

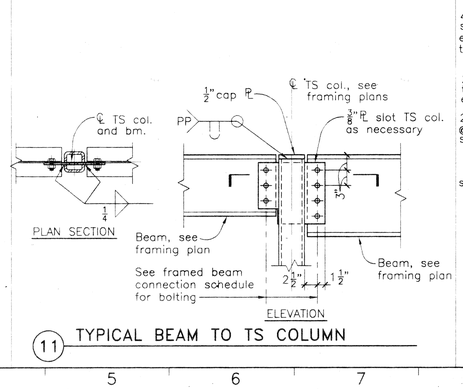

11 TYPICAL BEAM TO TS COLUMN

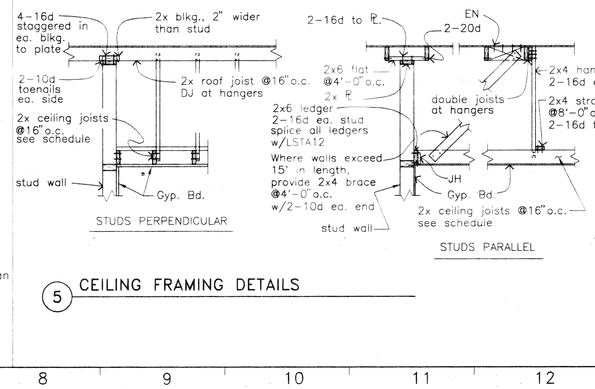

5 CEILING FRAMING DETAILS

LEGEND OF CEILING JOIST SIZES		
JOIST SIZE	MAX. SPAN	AT FULL HEIGHT STUD WALL
2x4 @16"	8'–0"	2x4 Ledger: 2–16d ea. stud @16"o.c. Joist to Ledger: JH
2x6 @16"	12'–0"	2x6 Ledger: Nailing same as 2x4
"2x8 @16"	14'–0"	2x8 Ledger: 3–16d ea. stud @ 16"o.c. Joist to Ledger: JH
"2x8 @12"	16'–0"	2x8 Ledger: 3–16d ea. stud @ 16"o.c. Joist to Ledger: JH

JH Denotes "U" type joist hanger.

NOTES:
* 1. Solid blkg. @ midpoint and ends of joist.
2. Contractor's option to use ceiling joist spanning from wall to wall or hung from roof joists as shown on details.
3. See Architectural drawings for ceiling joist heights and locations, and attachment of gyp. board to walls or ceiling.
4. Coordinate location of all openings in ceiling and adjust framing as necessary.
5. See nailing schedule in General Notes for additional information.

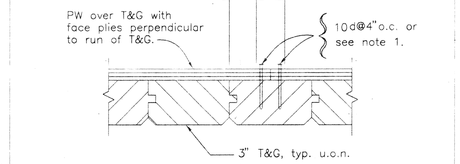

NOTES:
1. PW to T&G: 10d x 1 3/4" long hot dipped galv. nails.
2. PW edge nail spacing @ 4"o.c., Intermediate nail spacing @ 12"o.c. each way.
3. PW joint shall not center over T&G joint; see detail above.
4. 3" T&G nailing: 2–40d per board at each support contact perpendicular to T&G and 40d @ 6"o.c. for contact parallel to T&G. Use hot dipped galv. nails. Predrill 3" T&G, typ.
5. All end joints of T&G shall be over a support and continuous over intermediate supports. Where possible, stagger end joints of adjacent boards at intermediate supports where applicable.
6. All T&G shall be ALASKAN YELLOW CEDAR.

6 TYPICAL T & G DECK NAILING DETAIL

TWD018A

HOLDOWN SCHEDULE				
HD	HD ANCHOR BOLT DIAM.	HD ANCHOR BOLT MIN. EMBED.	BOLTS TO POST	PL WASHER
2A	5/8"ø	12"	2–5/8"ø	3" ⊓ x 1/2"
5,5A	3/4"ø	14"	2–3/4"ø	3" ⊓ x 1/2"
6	1"ø	15"	3–3/4"ø	3" ⊓ x 1/2"
7,7A	1 1/8"ø	19"	3–7/8"ø	3" ⊓ x 1/2"
9	1 1/8"ø	25"	3–1"ø	4" ⊓ x 1/2"
12	1 1/8"ø	30"	4–1"ø	4" ⊓ x 1/2"
15	1 1/4"ø	30"	5–1"ø	4" ⊓ x 1/2"
20A	1 1/4"ø	26"	4–1"ø	4" ⊓ x 1/2"
8A	1 3/8	25"	3–1 1/8	3–4 1/2

3 SIMPSON HOLDOWN DETAIL

See 19/S1.3 for HD @ 2nd floor

TWD019

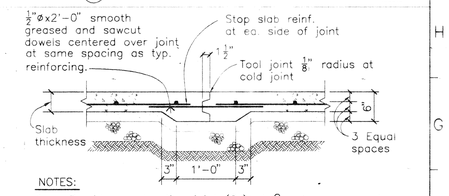

NOTES:
1. Provide construction joint (CJ) at ℄ columns and other locations shown on plan with keyed cold joints. Metal key joints may be used at contractor's option.
2. Contractor's option to use control joint, see typical control joint detail.

2 TYPICAL CONSTRUCTION COLD JOINT (CJ) CONCRETE SLAB ON GRADE

CON008

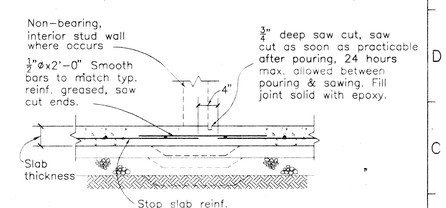

Note: Curing and saw cutting shall be inspected by the testing laboratory.

1 TYPICAL CONTROL JOINT (CJ)

CON009

HAF

OCT 1 97

REVISION	DATE	DESCRIPTION	INITIAL

ISSUE FOR PROGRESS REVIEW	DATE:
ISSUE FOR PLAN CHECK	
ISSUE FOR PERMIT	
ISSUE FOR BID	4/4/96
ISSUE FOR CONSTRUCTION	

SEAL:

REGISTERED PROFESSIONAL ENGINEER ROBERT M. TUMAS No. 2727 STRUCTURAL STATE OF CALIFORNIA

CONSULTANT:

Razzano Associates Inc.
Structural Engineers
366 Forteith Street
Oakland, CA 94609
(510) 658-7824
FAX (510) 658-7090

INTERACTIVE RESOURCES
ARCHITECTURE • PLANNING • ENGINEERING
117 PARK PLACE
POINT RICHMOND
CALIFORNIA 94801
(510) 236-7435
(FAX.) 232-5325

PROJECT:

STUDENT UNION

Diablo Valley College
321 Golf Club Road
Pleasant Hill, CA. 94523

Contra Costa County
Community College District

STAMP:

APPROVED AS NOTED
DEPT. OF BUILDING SERVICES
APPL 6 4 3 7
N/A N/A GR
4-17-96

APPL. NUMBER:

KEY PLAN:

REGISTERED CONTRACT INSPECTOR
10/31/97

SHEET TITLE:

TYPICAL DETAILS

SCALE	
PROJ. NO.	A94087.04
PREPARATION AND REVIEW	
PURPOSE	PERSONAL/INITIAL / DATE
DRAWN BY	PAL 04/28/95
PROJ. MGR.	GYN
PEER REVIEW	XXX XX/XX/XX

SHEET NUMBER:

S1.3

NUMBER: OF:

19960401 J:\94082\94082T02 1"=1'-0"

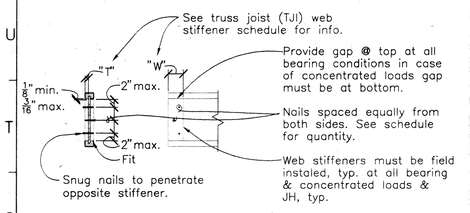

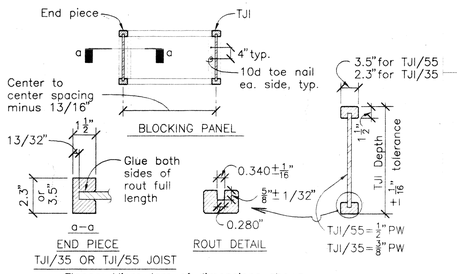

Flange: Micro-lam of dimensions shown.
Web: Structural I plywood.

2 TRUSS JOIST (TJI) DETAILS

TW0023

Note: TJI blkg. not to exceed 8'-0"

THIS DETAIL NOT USED

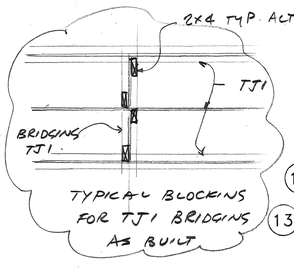

TYPICAL BLOCKING FOR TJI BRIDGING AS BUILT

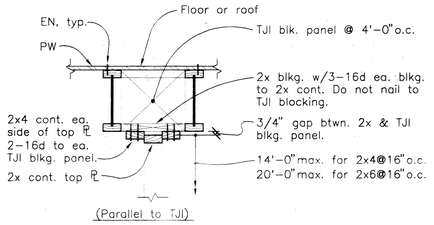

3 TRUSS JOIST (TJI) NON-BEARING WALL

TW0024

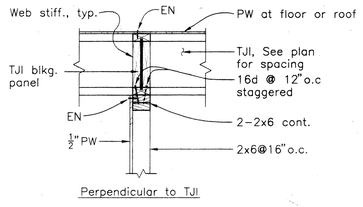

4 TRUSS JOIST (TJI) AT BEARING WALL

TW0025

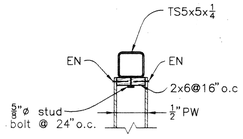

5 TS & STUD WALL

SITE RETAINING WALL SCHEDULE

H	B	t_1	t_2	D	Bk	Dk	W bar	X bar	Y bar	Z bar
0 to 4'–0"	3'–0"	8"	8"	1'–0"	–	–	–	#4@12	#4@12	#4@12
4'–1" to 6'–0"	4'–0"	8"	8"	1'–0"	1'–0"	1'–0"	–	#5@12	#5@12	#5@12
6'–1" to 8'–0"	5'–0"	10"	10"	1'–6"	1'–0"	1'–0"	#4@16EW	#5@12	#5@12	#5@12
8'–1" to 10'–0"	6'–0"	12"	12"	1'–6"	1'–0"	1'–0"	#4@16EW	#5@12	#5@12	#5@12
10'–1" to 12'–0"	7'–6"	12"	12"	1'–6"	1'–0"	1'–6"	#4@16EW	#6@12	#5@12	#6@12
12'–1" to 14'–6"	8'–0"	12"	12"	2'–0"	1'–0"	2'–0"	#4@16EW	#8@12	#6@12	#7@12
17'–0"	See section A–S3.1									

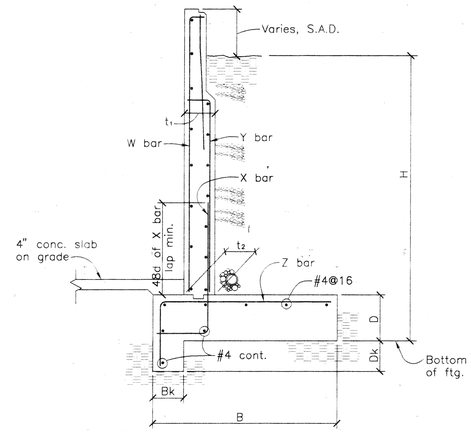

RETAINING WALL DETAIL A–S2.1

1/2"=1'–0"

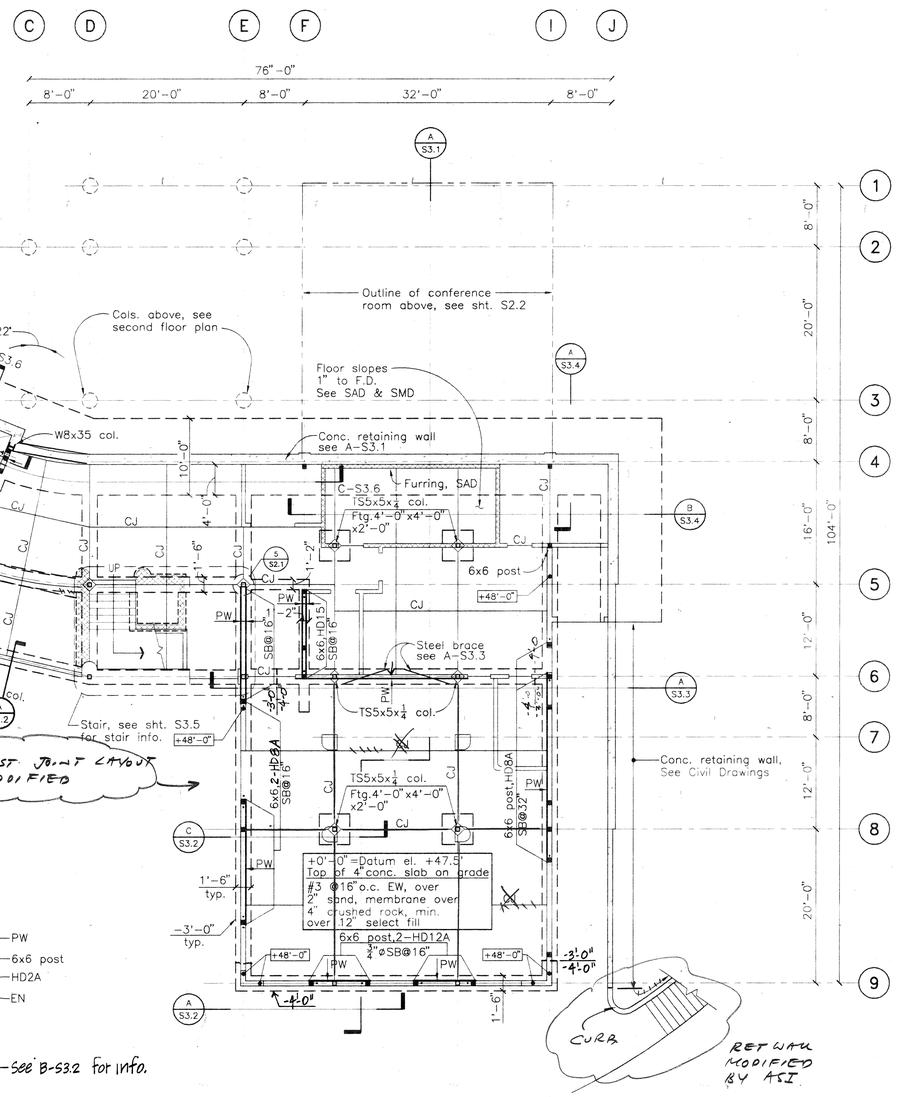

FOUNDATION AND FLOOR FRAMING PLAN

1/8"=1'–0"

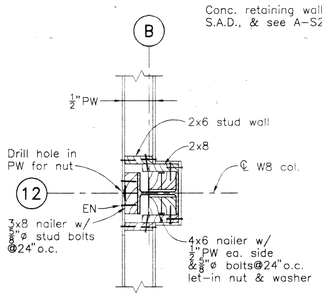

DETAIL C–S2.1

1"=1'–0"

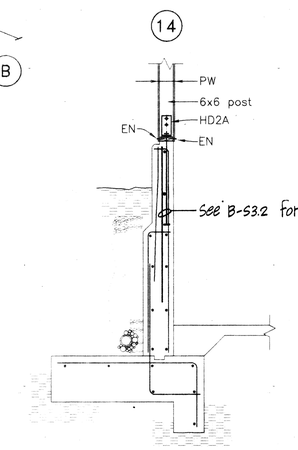

SECTION B–S2.1

1/2"=1'–0"

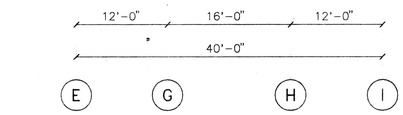

FOUNDATION AND FIRST FLOOR FRAMING PLAN

1/8"=1'–0"

NORTH

WEB STIFFENER SCHEDULE

TJI JOIST DEPTH/ SERIES	NO. OF NAILS REQUIRED: END SUPPORTS OR HANGER SUPPORTS	NO. OF NAILS REQUIRED: CONT. SUPPORTS	MIN. WEB STIFFENER WIDTH "W" U.O.N.	MIN. WEB STIFFENER THICKNESS "T"
10,12,14,16, 18"TJI/35	2–8d	2–8d	2 3/16"	1"
18"TJI/35	4–10d	7–10d	3 1/2"	1 1/2"
16"TJI/35x	2–8d	4–8d	2 3/16"	2 7/16"
30"TJI/35x	8–8d	12–8d	3 1/2"	3 7/8"

NOTES: 1. Provide wider web stiffener as necessary @ clip L's TJI blkg., etc..
2. Use TJI bridging at 10'–0"o.c. max. for spans greater than 10'–0". Do not cut or notch top or bottom chords. Provide web stiffeners at blocking panels at all bearings or concentrated loads.

1 TRUSS JOIST (TJI) WEB STIFFENER SCHEDULE

TW0022

FOUNDATION AND FLOOR FRAMING PLAN NOTES:

1. FOR GENERAL NOTES AND TYPICAL STRUCTURAL DETAILS NOT SHOWN HEREIN SEE SHEETS S1.1, S1.2 & S1.3.
2. SEE ARCHITECTURAL, MECHANICAL, PLUMBING, AND ELECTRICAL DRAWINGS FOR PERTINENT INFORMATION NOT SHOWN HEREIN. VERIFY ALL ITEMS WITH RESPECTIVE TRADES PRIOR TO POURING CONCRETE FOOTINGS.
3. ALL GRIDS AND DIMENSIONS ARE TO CENTERLINE OF STUD WALLS OR COLUMNS AS SHOWN OR NOTED ON DRAWINGS, UNLESS OTHERWISE NOTED.
4. CENTERLINE OF FOOTING SHALL COINCIDE WITH CENTERLINE OF STUD WALL ABOVE, UNLESS OTHERWISE SHOWN OR NOTED.
5. F.S. DENOTES FACE OF STUD WALL. F.O.C. DENOTES FACE OF EXTERIOR CONCRETE CURB.
6. TOP OF FIRST FLOOR SLAB ELEVATION =+0'–0" (DATUM =+47.5'), S.A.D.
7. SLAB–ON–GRADE SHALL BEAR A MINIMUM OF 2" ON THE FOOTING WALL, UNLESS OTHERWISE NOTED.
8. SEE ARCHITECTURAL, MECHANICAL, AND ELECTRICAL DRAWINGS FOR OPENINGS IN WALLS AND LOCATIONS OF ALL CURBS, SLOPES, AND DRAINS.
9. C.J. DENOTES JOINT IN CONCRETE SLAB. SEE PLAN FOR LOCATIONS & SEE SHT. S1.3.
10. ELEVATION OF BOTTOM OF FOOTINGS SHALL BE –3'–0" MIN. AND SHALL BE AT LEAST 18" BELOW ADJACENT GRADE, UNLESS SHOWN OTHERWISE.
11. ALL FOOTINGS SHALL BE 1'–6" WIDE, TYP., U.O.N.
12. PROVIDE 5/8"ø SILL BOLTS (S.B.) AT 48"o.c. TYP., U.O.N.
13. ELEVATION THUS: -3'–0" INDICATES ELEVATION OF BOTTOM OF FOOTING.
14. ELEVATION THUS: -3'–0" / -4'–0" INDICATES ELEVATION AT BOTTOM OF EACH SIDE OF STEPPED FOOTING. SEE DETAIL 6/S1.2.
15. ALL EXTERIOR WALLS SHALL BE SHEATHED w/ 1/2" PLYWOOD, TYP., U.O.N.
16. ALL STUD WALLS SHALL BE 2x6@16"o.c., UNLESS OTHERWISE NOTED.
17. PW — INDICATES 1/2" P.W. ON ONE SIDE OF STUD WALL FOR FULL LENGTH OF WALL. SEE PLAN FOR LOCATIONS.
18. PW / PW — INDICATES 1/2" P.W. ON BOTH SIDES OF STUD WALL FOR FULL LENGTH OF WALL. SEE PLAN FOR LOCATIONS. DO NOT LOCATE PLYWOOD JOINTS ON SAME STUD.
19. HD5A SB@32 — INDICATES SIMPSON HOLDOWN WITH SILL BOLTS @ REQUIRED SPACING BETWEEN POSTS. ALL HOLDOWNS REQUIRE 6x8 POST IN 2x8 WALLS, 6x6 POST IN 2x6 WALLS, U.O.N.
20. ■ — INDICATES 6x6 POST, TYP., U.O.N. FOR POSTS @ HOLDOWNS, SEE NOTE 19. CENTER POSTS UNDER BEAMS ABOVE, TYP., U.O.N.
21. □ — INDICATES TS5X5X1/4 COLUMN, U.O.N., SEE PLAN FOR LOCATIONS.
22. ▭ — INDICATES CONCRETE CURB @ INTERIOR STUD WALLS, S.A.D. FOR EXACT DIMENSIONS AND LOCATIONS, & SEE 10/S1.3.
23. +48'–0" — INDICATES TOP OF CONCRETE CURB ELEVATION. SEE PLAN.

HAF

OCT / 97

REVISION	DATE	DESCRIPTION	INITIAL

ISSUE FOR PROGRESS REVIEW	DATE:
ISSUE FOR PLAN CHECK	
ISSUE FOR PERMIT	
ISSUE FOR BID	4/4/96
ISSUE FOR CONSTRUCTION	

SEAL:

REGISTERED PROFESSIONAL ENGINEER ROBERT M. TAVAN No. 2727 STRUCTURAL STATE OF CALIFORNIA

CONSULTANT:

Razzano Associates Inc.
Structural Engineers
366 Fortieth Street
Oakland, CA 94609
(510) 658-7821
FAX (510) 658-7090

INTERACTIVE RESOURCES
ARCHITECTURE · PLANNING · ENGINEERING
117 PARK PLACE
POINT RICHMOND
CALIFORNIA 94801
(510) 236-7435
(FAX) 232-5325

PROJECT:

STUDENT UNION

Diablo Valley College
321 Golf Club Road
Pleasant Hill, CA. 94523

Contra Costa County
Community College District

STAMP:

APPL. NUMBER: N/A N/A GR 4-17-96

KEY PLAN:

10/31/97

SHEET TITLE:

FOUNDATION AND FIRST FLOOR FRAMING PLAN

SCALE	
PROJ. NO.	A94087.04
PREPARATION AND REVIEW	
PURPOSE	PERSONAL/INITIAL / DATE
DRAWN BY	PAL 04/28/95
PROJ. MGR.	GYN
PEER REVIEW	XXX XX/XX/XX

SHEET NUMBER:

S2.1

NUMBER: OF:

19960409 J:\94082\94082P01 1/8"=1'–0"

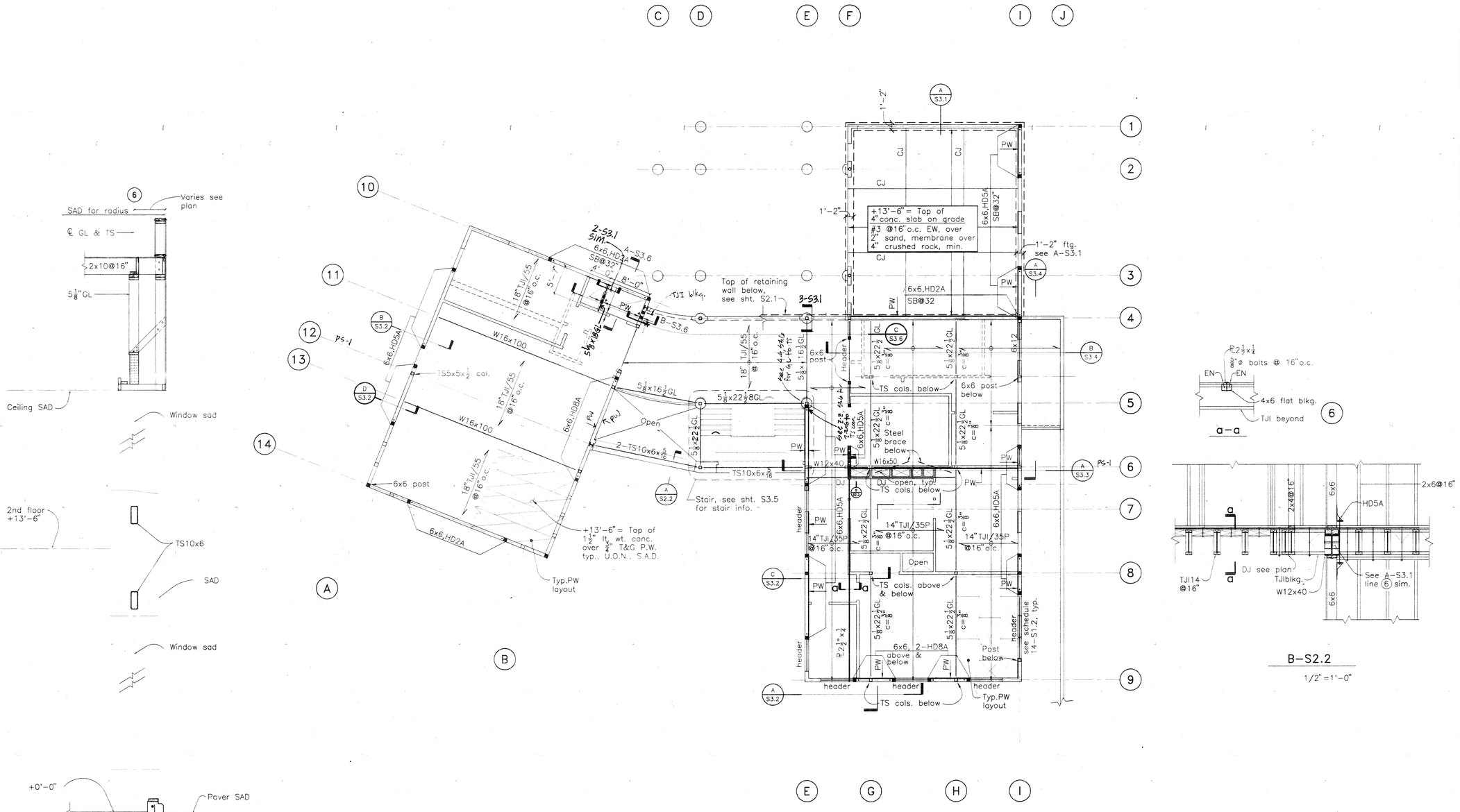

SECOND FLOOR FRAMING PLAN
1/8"=1'-0"

NORTH

FLOOR FRAMING PLAN NOTES:

1. SEE SHEET S2.1 FOR INFORMATION NOT SHOWN OR NOTED.
2. TOP OF SECOND FINISHED FLOOR ELEV.= +13'-6", TYP., U.O.N.
3. ALL FLOOR AREAS TO HAVE 1½" LT. WT. CONC. OVER ¾" P.W., U.O.N., S.A.D.

HHF

Oct 1 97

REVISION	DATE	DESCRIPTION	INITIAL

ISSUE FOR PROGRESS REVIEW	DATE:
ISSUE FOR PLAN CHECK	
ISSUE FOR PERMIT	
ISSUE FOR BID	4/4/96
ISSUE FOR CONSTRUCTION	

SEAL:

REGISTERED PROFESSIONAL ENGINEER ROBERT M. TOVANI No. 2727 STRUCTURAL STATE OF CALIFORNIA

CONSULTANT:

Razzano Associates Inc.
Structural Engineers
366 Fortieth Street
Oakland, CA. 94609
(510) 658-7825
FAX (510) 658-7090

INTERACTIVE RESOURCES
ARCHITECTURE • PLANNING • ENGINEERING
117 PARK PLACE
POINT RICHMOND
CALIFORNIA 94801
(510) 236-7435
(FAX) 232-5325

PROJECT:

STUDENT UNION

Diablo Valley College
321 Golf Club Road
Pleasant Hill, CA. 94523

Contra Costa County
Community College District

STAMP:

APPL. NUMBER: 4-17-96

KEY PLAN:

10/31/97

SHEET TITLE:

SECOND FLOOR FRAMING PLAN

SCALE	
PROJ. NO.	A94087.04

PREPARATION AND REVIEW

PURPOSE	PERSONAL/INITIAL	DATE
DRAWN BY	PAL	04/28/95
PROJ. MGR.	GYN	
PEER REVIEW	XXX	XX/XX/XX

SHEET NUMBER:

S2.2

NUMBER: OF:

19960409 \94082\94082P02 1/8"=1'-0"

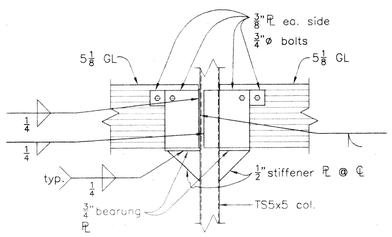

c–c

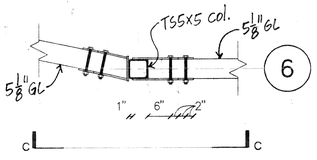

DETAIL C–S2.3

1/2"=1'-0"

DETAIL B–S2.3

1/2"=1'-0"

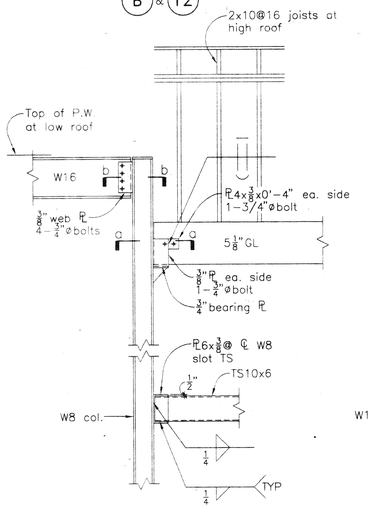

DETAIL A–S2.3

1/2"=1'-0"

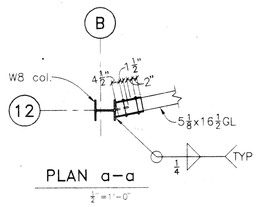

PLAN a–a

1/2"=1'-0"

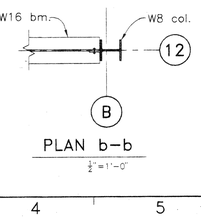

PLAN b–b

1/2"=1'-0"

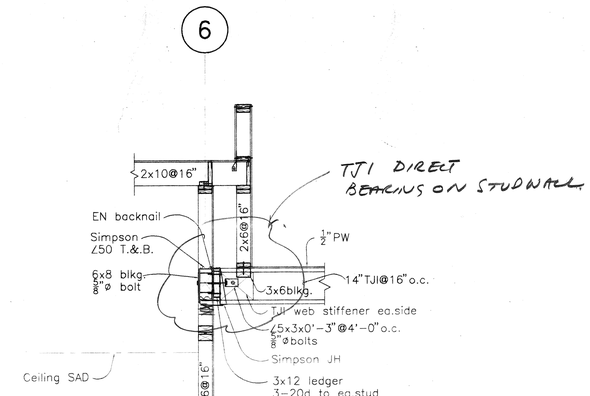

DETAIL D–S2.3

1/2"=1'-0"

ROOF FRAMING PLAN

1/8"=1'-0"

ROOF FRAMING PLAN NOTES:

1. FOR GENERAL NOTES AND TYPICAL DETAILS NOT SHOWN HEREIN, SEE SHEETS S1.1 AND S1.2.
2. SEE ARCHITECTURAL, MECHANICAL, PLUMBING AND ELECTRICAL DRAWINGS FOR PERTINENT INFORMATION NOT SHOWN HEREIN. VERIFY ALL ITEMS WITH RESPECTIVE TRADES PRIOR TO FRAMING.
3. SEE FOUNDATION AND FLOOR FRAMING PLAN FOR GRID DIMENSIONS AND APPLICABLE NOTES.
4. ALL ROOF AREAS SHALL BE SHEATHED WITH 1/2" PLYWOOD, U.O.N., SEE SHEETS S1.1 AND S1.2 FOR TYPICAL NAILING, AND PLYWOOD SPLICE PATTERNS.
5. SEE ARCHITECTURAL AND MECHANICAL DRAWINGS FOR EXACT LOCATIONS OF ALL MECHANICAL UNITS AND OPENINGS IN ROOF. PROVIDE DOUBLE JOIST AROUND ALL OPENINGS IN ROOF, U.O.N.
6. JOISTS SUPPORTING MECHANICAL EQUIPMENT SHALL BE DOUBLE JOISTS (DJ), UNLESS OTHERWISE NOTED.
7. ——S——▶ DENOTES ROOF SLOPE. SEE PLANS AND ARCHITECTURAL DRAWINGS.
8. ☐ DENOTES POST OR COLUMN BELOW. SEE FOUNDATION AND FLOOR FRAMING PLANS FOR ALL POST AND COLUMN SIZES AND LOCATIONS.
9. CONNECTION HARDWARE SUCH AS "CC" COLUMN CAPS, "MST" STRAPS, "L" ANGLES ETC., INDICATES SIMPSON STRONG TIE.
10. C=1/2" DENOTES GLU-LAM BEAM w/ 1/2" CAMBER, SEE PLANS. GLU-LAM BEAMS WITHOUT THIS DESIGNATION HAVE NO CAMBER.

HAF

OCT 197

REVISION	DATE	DESCRIPTION	INITIAL

ISSUE FOR PROGRESS REVIEW	DATE:
ISSUE FOR PLAN CHECK	
ISSUE FOR PERMIT	
ISSUE FOR BID	4/4/96
ISSUE FOR CONSTRUCTION	

SEAL:

REGISTERED PROFESSIONAL ENGINEER — ROBERT M. TUTTLE — No. 2727 — STRUCTURAL — STATE OF CALIFORNIA

CONSULTANT:

Razzano Associates Inc.
Structural Engineers
366 Fortieth Street
Oakland, CA 94609
(510) 658-7925
FAX (510) 658-7090

INTERACTIVE RESOURCES
ARCHITECTURE • PLANNING • ENGINEERING
117 PARK PLACE
POINT RICHMOND
CALIFORNIA 94801
(510) 236-7435
(FAX.) 232-5325

PROJECT:

STUDENT UNION

Diablo Valley College
321 Golf Club Road
Pleasant Hill, CA. 94523

Contra Costa County
Community College District

STAMP:

APPL 6 41 39
N/A N/A GR
4-17-96

APPL. NUMBER:

KEY PLAN:

REGISTERED PROFESSIONAL ENGINEER — 10/31/97 — STATE OF CALIFORNIA

SHEET TITLE:

ROOF FRAMING PLAN

SCALE	
PROJ. NO.	A94087.04
PREPARATION AND REVIEW	
PURPOSE	PERSONAL/INITIAL / DATE
DRAWN BY	PAL / 04/28/95
PROJ. MGR.	GYN
PEER REVIEW	XXX / XX/XX/XX

SHEET NUMBER:

S2.3

NUMBER: OF:

19960409 J:\94082\94082P03 1/8"=1'-0"

42

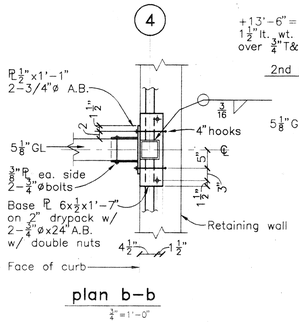

plan b–b

$\frac{1}{4}$"=1'-0"

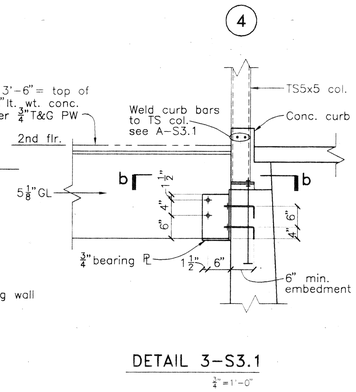

DETAIL 3–S3.1

$\frac{1}{4}$"=1'-0"

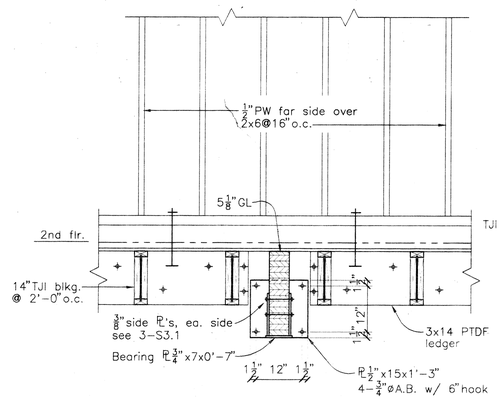

DETAIL 2–S3.1

$\frac{1}{4}$"=1'-0"

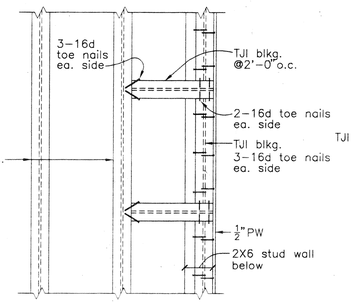

plan a–a

1"=1'-0"

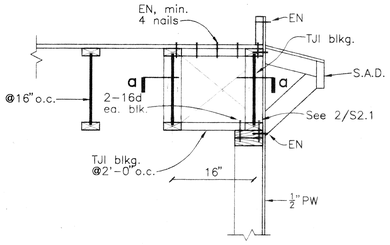

DETAIL 1–S3.1

1"=1'-0"

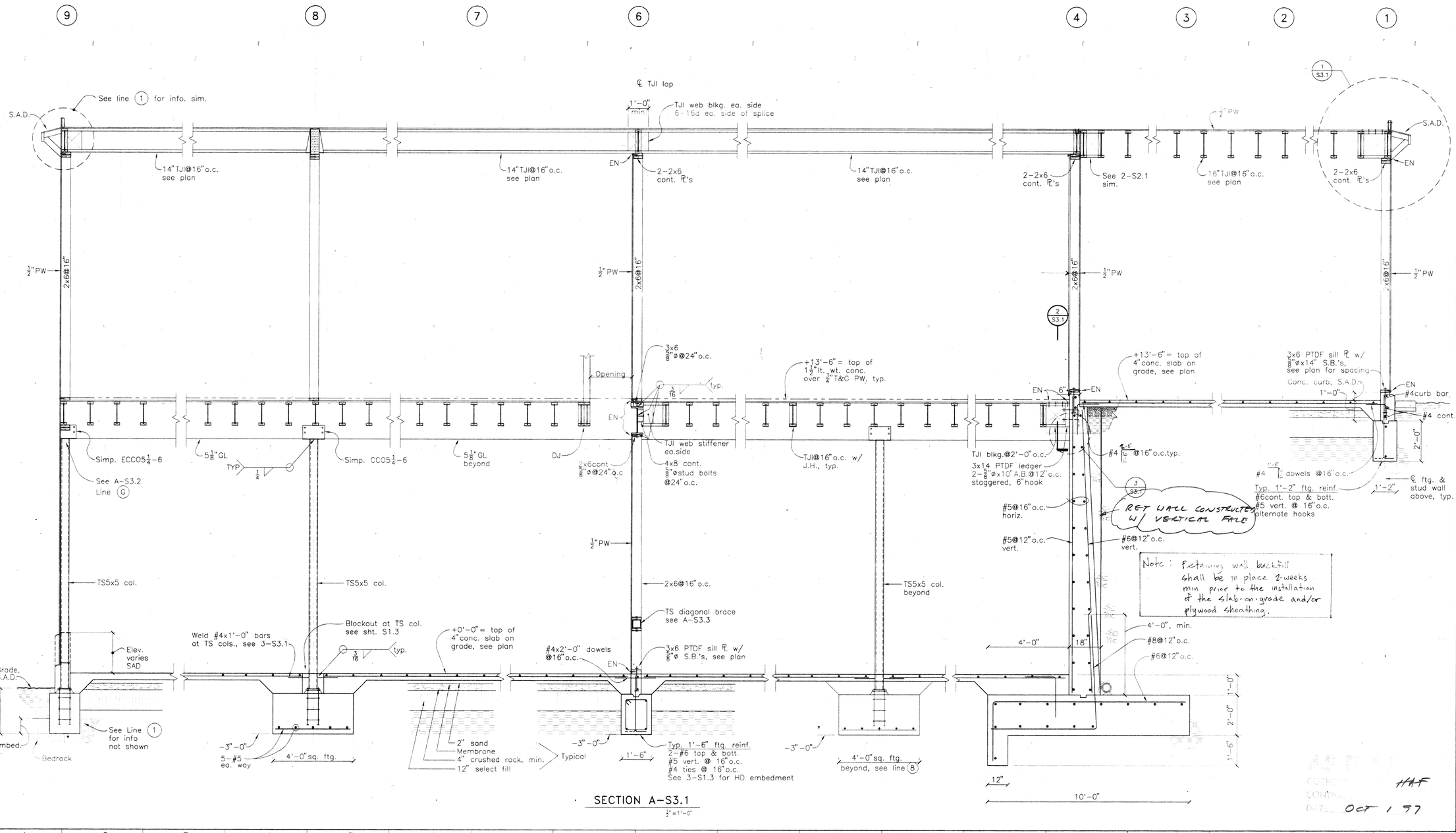

SECTION A–S3.1

$\frac{1}{2}$"=1'-0"

REVISION	DATE	DESCRIPTION	INITIAL

ISSUE FOR PROGRESS REVIEW	DATE:
ISSUE FOR PLAN CHECK	
ISSUE FOR PERMIT	
ISSUE FOR BID	4/4/96
ISSUE FOR CONSTRUCTION	

SEAL:

REGISTERED PROFESSIONAL ENGINEER — ROBERT M. TOVANI — No. 2727 — STRUCTURAL — STATE OF CALIFORNIA

CONSULTANT:

Razzano Associates Inc.
Structural Engineers
366 Fortieth Street
Oakland, CA 94609
(510) 658-7925
FAX (510) 658-7090

INTERACTIVE RESOURCES
ARCHITECTURE • PLANNING • ENGINEERING
117 PARK PLACE
POINT RICHMOND
CALIFORNIA 94801
(510) 236-7435
(FAX) 232-5335

PROJECT:

STUDENT UNION

Diablo Valley College
321 Golf Club Road
Pleasant Hill, CA. 94523

Contra Costa County Community College District

STAMP:

APPL 6 4 1 9
N/A N/A GR
4/17/96

APPL. NUMBER:

KEY PLAN:

(10/31/97)

SHEET TITLE:

STRUCTURAL SECTIONS

SCALE	
PROJ. NO.	A94087.04
PREPARATION AND REVIEW	
PURPOSE	PERSONAL/INITIAL / DATE
DRAWN BY	PAL 04/28/95
PROJ. MGR.	GYN
PEER REVIEW	XXX XX/XX/XX

SHEET NUMBER:

S3.1

NUMBER: OF:

COPYRIGHT CONTENTS DATE Oct 1 97 HAF

19960403 J:\94082\94082S01 1/2"=1'-0"

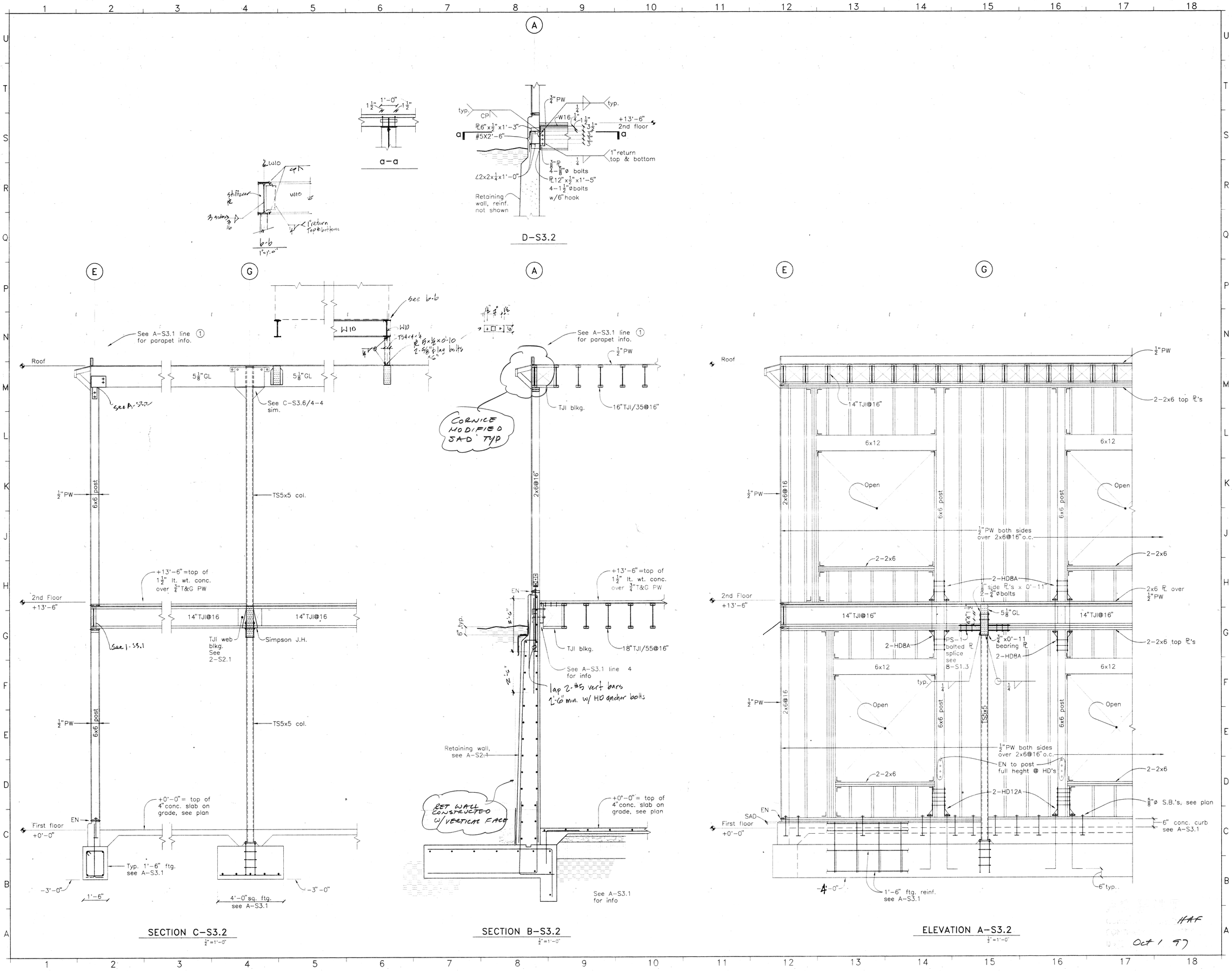

REVISION	DATE	DESCRIPTION	INITIAL

ISSUE FOR PROGRESS REVIEW	DATE:
ISSUE FOR PLAN CHECK	
ISSUE FOR PERMIT	
ISSUE FOR BID	4/4/96
ISSUE FOR CONSTRUCTION	

SEAL:

REGISTERED PROFESSIONAL ENGINEER ROBERT M. TOVANI No. 2727 STRUCTURAL STATE OF CALIFORNIA

CONSULTANT:

Razzano Associates Inc.
Structural Engineers
366 Fortieth Street
Oakland, CA. 94609
(510) 658-7825
FAX (510) 658-7090

INTERACTIVE RESOURCES
ARCHITECTURE • PLANNING • ENGINEERING
117 PARK PLACE
POINT RICHMOND
CALIFORNIA 94801
(510) 236-7435
(FAX) 232-5325

PROJECT:

STUDENT UNION

Diablo Valley College
321 Golf Club Road
Pleasant Hill, CA. 94523

Contra Costa County
Community College District

STAMP:

APPL. NUMBER: N/A N/A GR 4/17/96

KEY PLAN:

10/31/97

SHEET TITLE:

STRUCTURAL SECTIONS

SCALE	
PROJ. NO.	A94087.04

PREPARATION AND REVIEW

PURPOSE	PERSONAL/INITIAL	DATE
DRAWN BY	PAL	04/28/95
PROJ. MGR.	GYN	
PEER REVIEW	XXX	XX/XX/XX

SHEET NUMBER:

S3.2

NUMBER: OF:

HAF
Oct 1 97

19960402 J:\94082\94082S02 1/2"=1'-0"

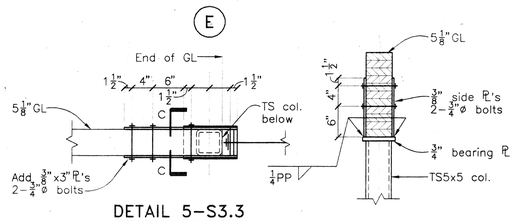

DETAIL 5–S3.3

1"=1'–0"

c–c

1"=1'–0"

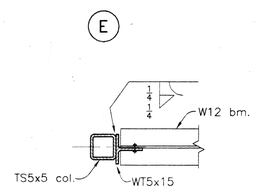

DETAIL 4–S3.3

1"=1'–0"

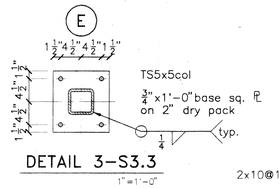

DETAIL 3–S3.3

1"=1'–0"

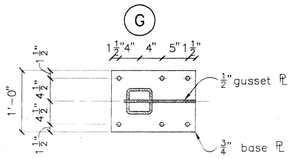

DETAIL 2–S3.3

1"=1'–0"

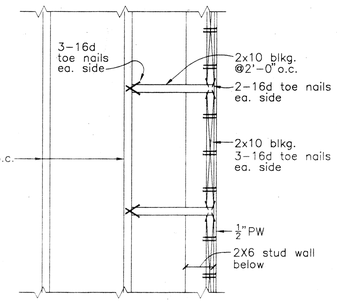

plan b–b

1"=1'–0"

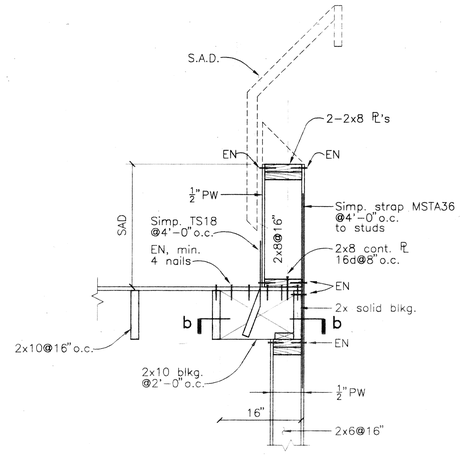

DETAIL 1–S3.3

1"=1'–0"

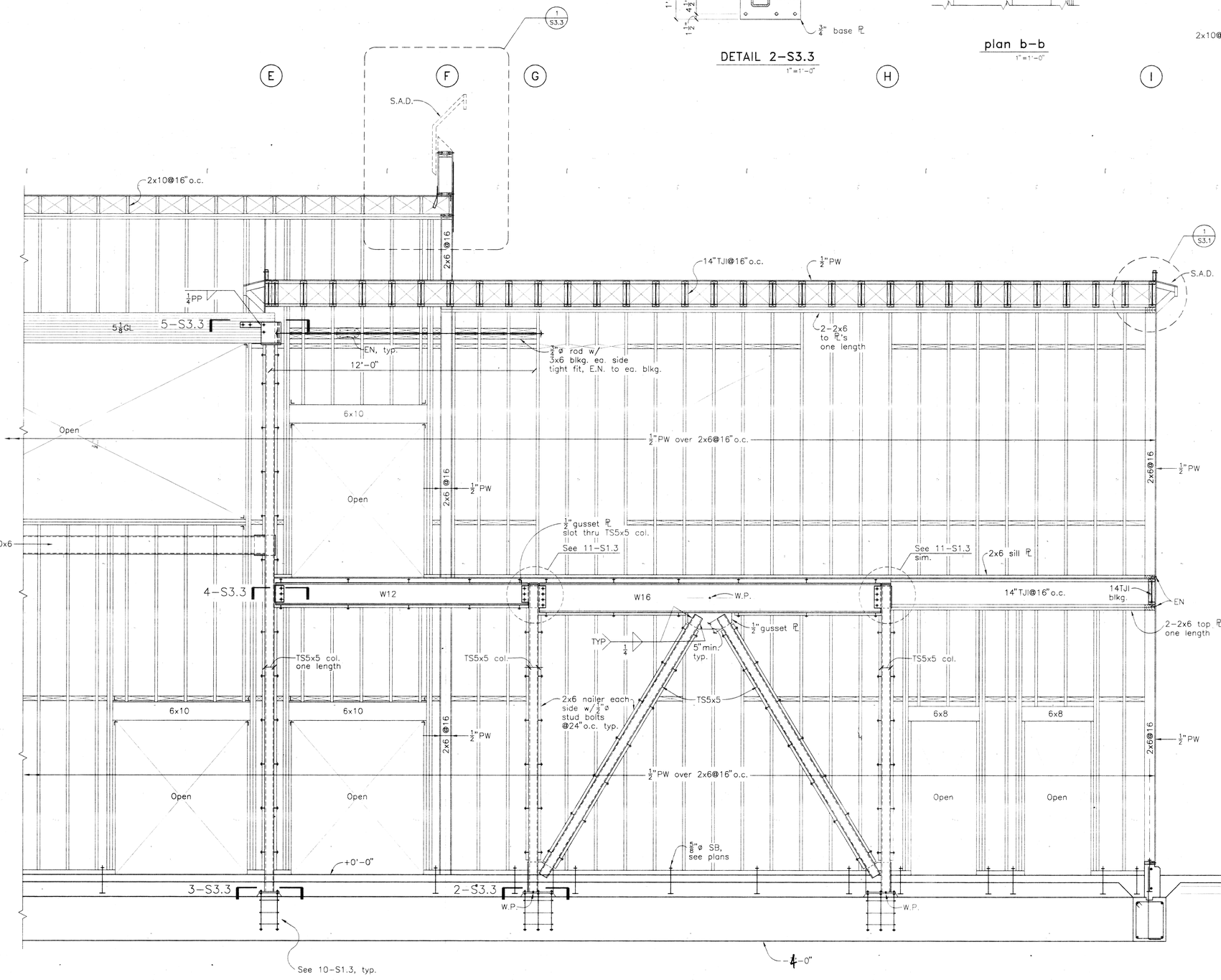

SECTION A–S3.3

@ Line (6) ¼"=1'–0"

REVISION	DATE	DESCRIPTION	INITIAL

ISSUE FOR PROGRESS REVIEW	DATE:
ISSUE FOR PLAN CHECK	
ISSUE FOR PERMIT	
ISSUE FOR BID	4/4/97
ISSUE FOR CONSTRUCTION	

SEAL:

REGISTERED PROFESSIONAL ENGINEER ROBERT M. HOWAT No. 2727 STRUCTURAL STATE OF CALIFORNIA

CONSULTANT:

Razzano Associates Inc.
Structural Engineers
388 Fortieth Street
Oakland, CA. 94609
(510) 658-7925
FAX (510) 658-7090

INTERACTIVE RESOURCES

ARCHITECTURE • PLANNING • ENGINEERING

117 PARK PLACE
POINT RICHMOND
CALIFORNIA 94801
(510) 236-7435
(FAX) 232-5325

PROJECT:

STUDENT UNION

Diablo Valley College
321 Golf Club Road
Pleasant Hill, CA. 94523

Contra Costa County
Community College District

STAMP:

APPLICABLE N/A N/A GR 4/17/96

APPL. NUMBER:

KEY PLAN:

10/31/97

SHEET TITLE:

STRUCTURAL SECTIONS

SCALE	
PROJ. NO.	A94087.04
PREPARATION AND REVIEW	
PURPOSE	PERSONAL/INITIAL / DATE
DRAWN BY	PAL / 04/28/95
PROJ. MGR.	GYN /
PEER REVIEW	XXX / XX/XX/XX

SHEET NUMBER:

S3.3

NUMBER: OF:

HAF

Oct 1 97

19960409 J:\94082\94082S03 1/2"=1'–0"

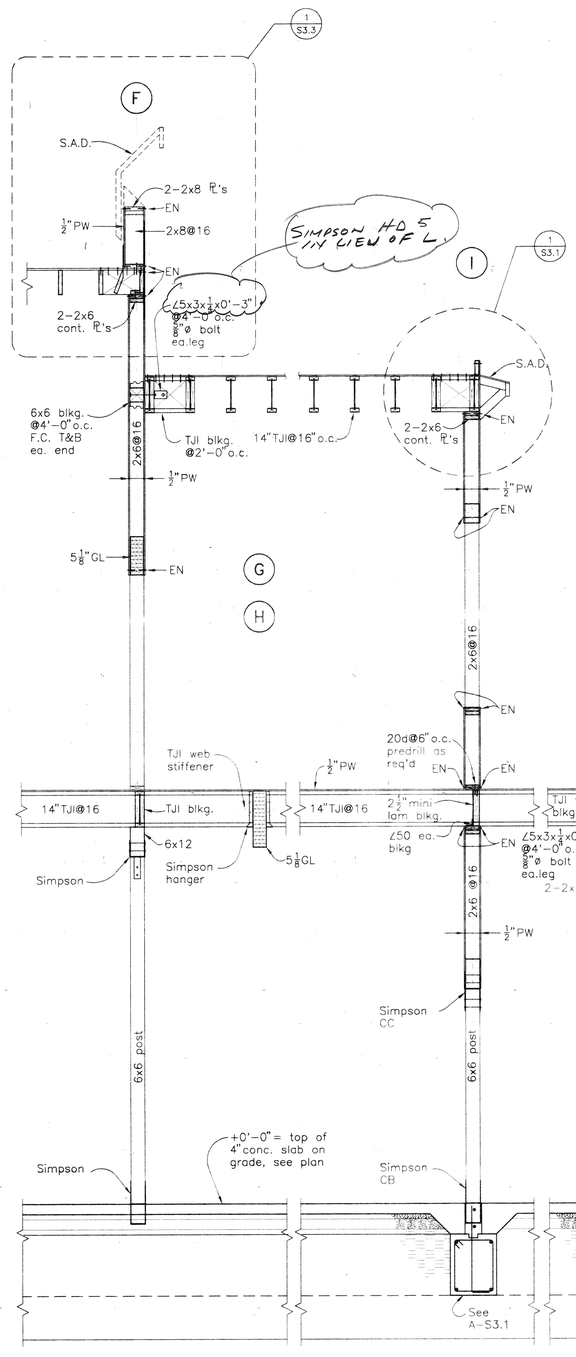

REVISION	DATE	DESCRIPTION	INITIAL

ISSUE FOR PROGRESS REVIEW	DATE:
ISSUE FOR PLAN CHECK	
ISSUE FOR PERMIT	
ISSUE FOR BID	4/4/96
ISSUE FOR CONSTRUCTION	

SEAL:

REGISTERED PROFESSIONAL ENGINEER ROBERT M. TOWAN No. 2727 STRUCTURAL STATE OF CALIFORNIA

CONSULTANT:

Razzano Associates Inc.
Structural Engineers
366 Fortieth Street
Oakland, CA. 94609
(510) 658-7825
Fax (510) 658-7090

INTERACTIVE RESOURCES
ARCHITECTURE • PLANNING • ENGINEERING
117 PARK PLACE
POINT RICHMOND
CALIFORNIA 94801
(510) 236-2435
(FAX) 232-5325

PROJECT:

STUDENT UNION

Diablo Valley College
321 Golf Club Road
Pleasant Hill, CA. 94523

Contra Costa County
Community College District

STAMP:

N/A N/A GR
4-17-96

APPL. NUMBER:

KEY PLAN:

10/31/97

SHEET TITLE:

STRUCTURAL SECTIONS

SCALE	
PROJ. NO.	A94087.04

PREPARATION AND REVIEW		
PURPOSE	PERSONAL/INITIAL	DATE
DRAWN BY	PAL	04/25/95
PROJ. MGR.	GYN	
PEER REVIEW	XXX	XX/XX/XX

SHEET NUMBER:

S3.4

NUMBER: OF:

HAF

Oct 197

19960408 J:\94082\94082S04 1/2"=1'-0"

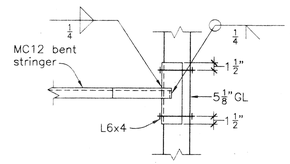

plan d–d
1"=1'-0"

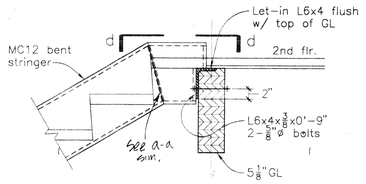

detail c–c
1"=1'-0"

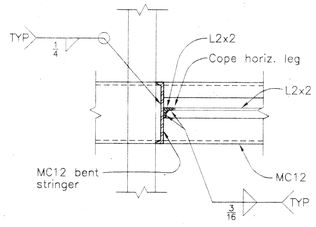

detail b–b
1"=1'-0"

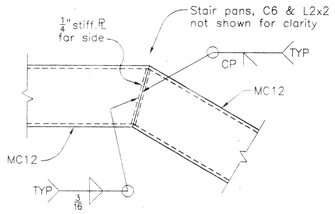

detail a–a
1"=1'-0"

SEE SHOP FABRICATION PLANS BY ACOSTA WELDING FOR ADDITIONAL DETAILS

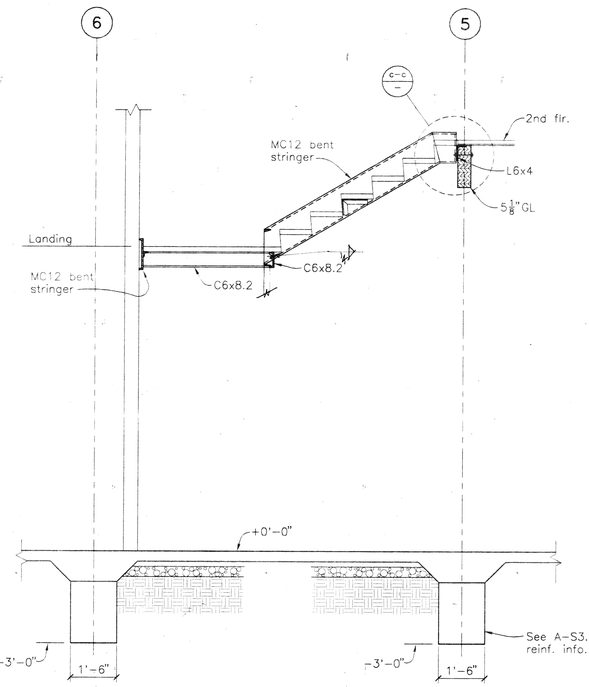

SECTION C–S3.5
1/2"=1'-0"

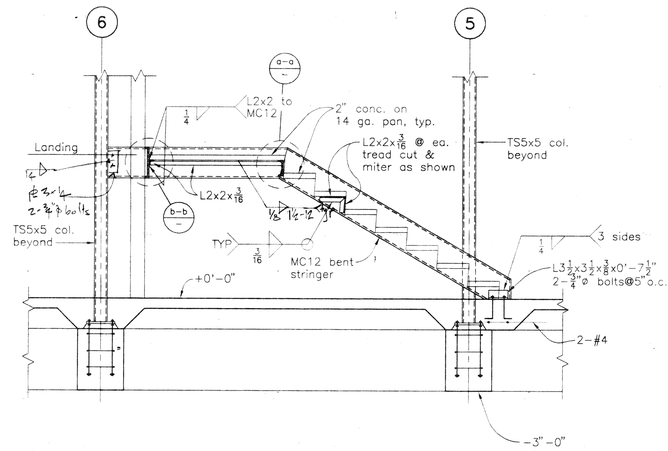

SECTION A–S3.5
1/2"=1'-0"

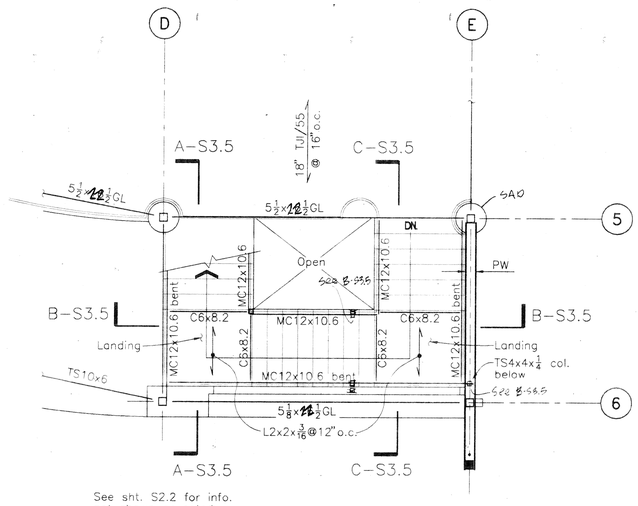

SECOND FLOOR STAIR FRAMING PLAN
1/4"=1'-0"

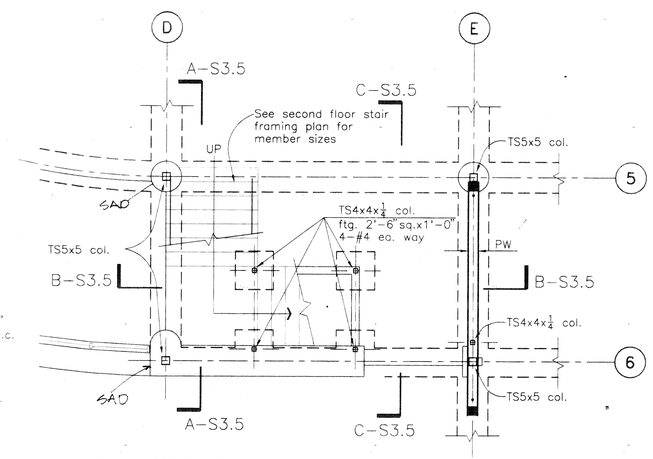

FIRST FLOOR STAIR FRAMING PLAN
1/4"=1'-0"

SECTION B–S3.5
1/2"=1'-0"

REVISION	DATE	DESCRIPTION	INITIAL

ISSUE FOR PROGRESS REVIEW	DATE:
ISSUE FOR PLAN CHECK	
ISSUE FOR PERMIT	
ISSUE FOR BID	4/4/96
ISSUE FOR CONSTRUCTION	

SEAL:

REGISTERED PROFESSIONAL ENGINEER · ROBERT M. TOMA · No. 2727 · STRUCTURAL · STATE OF CALIFORNIA

CONSULTANT:

Razzano Associates Inc.
Structural Engineers
366 Fortieth Street
Oakland, CA. 94609
(510) 658-7625
FAX (510) 658-7090

INTERACTIVE RESOURCES
ARCHITECTURE • PLANNING • ENGINEERING
117 PARK PLACE
POINT RICHMOND
CALIFORNIA 94801
(510) 236-7435
(FAX) 232-5325

PROJECT:

STUDENT UNION

Diablo Valley College
321 Golf Club Road
Pleasant Hill, CA. 94523

Contra Costa County
Community College District

STAMP:

LICENSED ARCHITECT · R. C. CITRON · CIVIL · STRUCTURAL · 10/31/97

APPL. NUMBER:
APPLE 4139
N/A N/A GR
4/17/96

KEY PLAN:

SHEET TITLE:

STRUCTURAL SECTIONS

SCALE	
PROJ. NO.	A94087.04
PREPARATION AND REVIEW	

PURPOSE	PERSONAL/INITIAL	DATE
DRAWN BY	PAL	04/28/95
PROJ. MGR.	GYN	
PEER REVIEW	XXX	XX/XX/XX

SHEET NUMBER:

S3.5

NUMBER: OF:

HAF

Oct 197

19960329 J:\94082\94082S05 1/2"=1'-0"

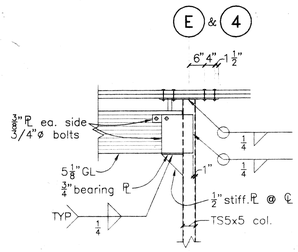

4–4

½"=1'–0"

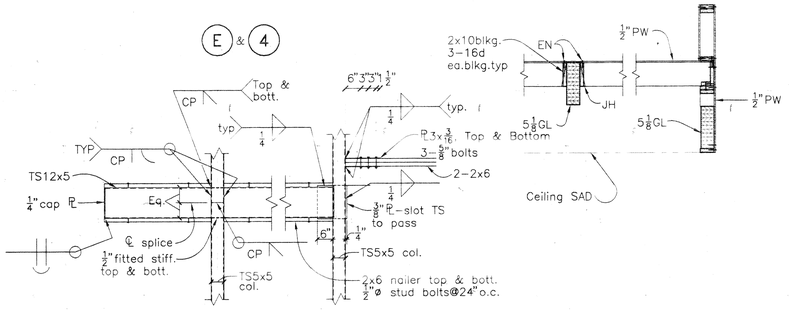

z–z

½"=1'–0"

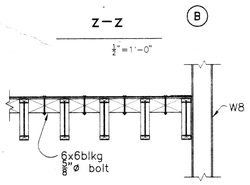

y–y

½"=1'–0"

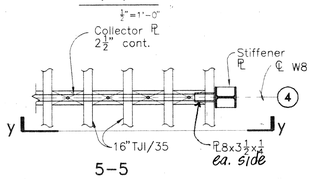

5–5

½"=1'–0"

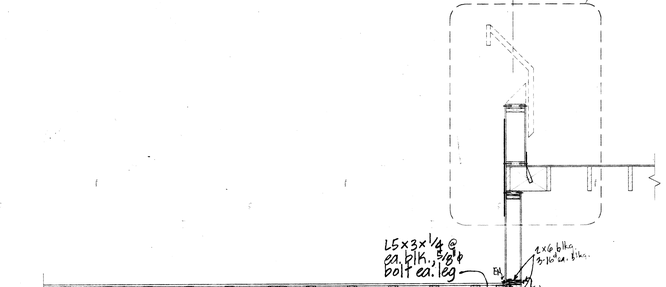

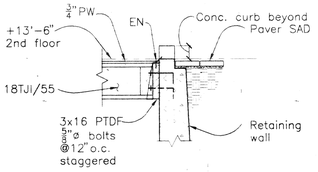

x–x

½"=1'–0"

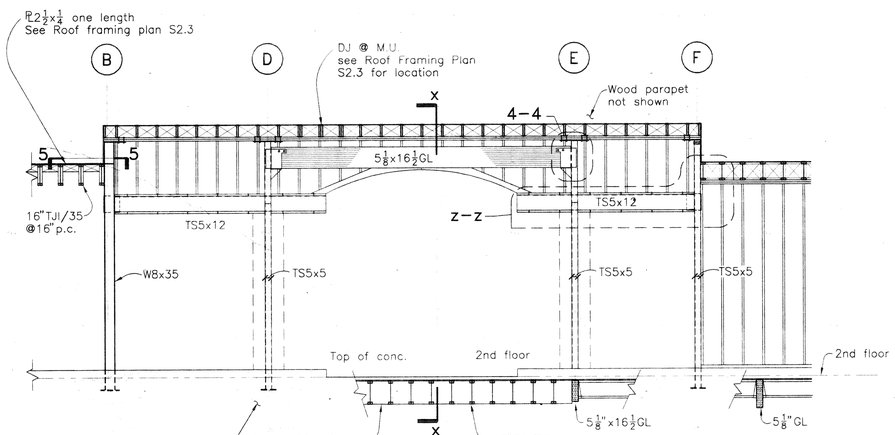

PARTIAL FRAMING ELEVATION C–S3.6

¼"=1'–0"

SECTION B–S3.6

½"=1'–0"

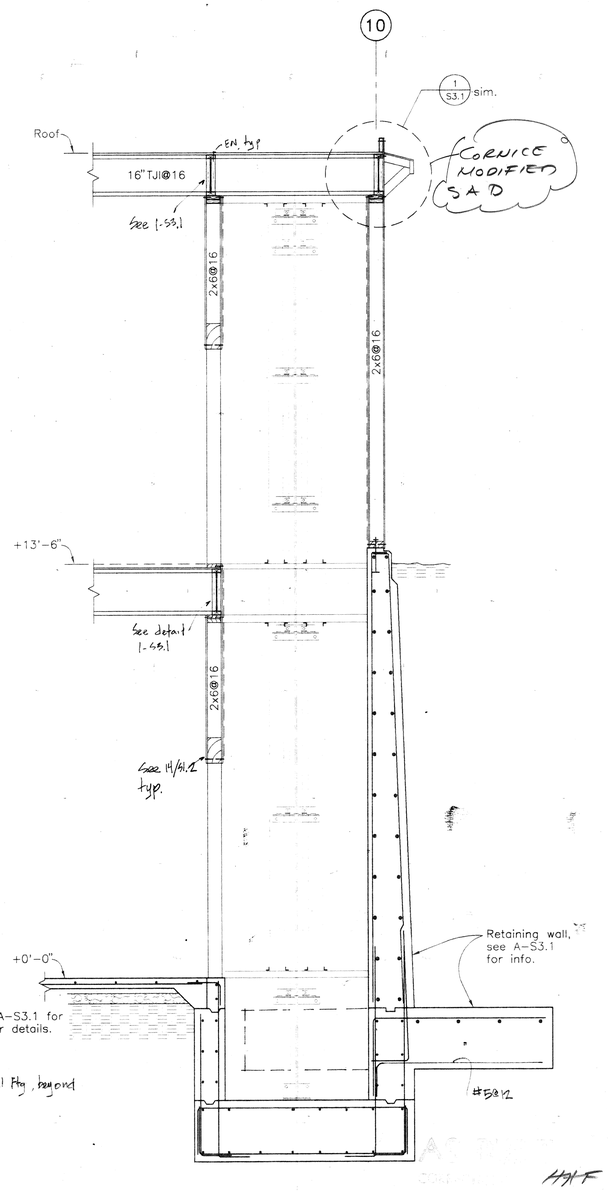

SECTION A–S3.6

½"=1'–0"

REVISION	DATE	DESCRIPTION	INITIAL

ISSUE FOR PROGRESS REVIEW	DATE:
ISSUE FOR PLAN CHECK	
ISSUE FOR PERMIT	
ISSUE FOR BID	4/4/96
ISSUE FOR CONSTRUCTION	

SEAL:

REGISTERED PROFESSIONAL ENGINEER ★ ROBERT M. TOMANI No. 2727 STRUCTURAL ★ STATE OF CALIFORNIA ★

CONSULTANT:

Razzano Associates Inc.
Structural Engineers
366 Fortieth Street
Oakland, CA. 94609
(510) 658-7825
FAX (510) 658-7090

INTERACTIVE RESOURCES

ARCHITECTURE • PLANNING • ENGINEERING

117 PARK PLACE
POINT RICHMOND
CALIFORNIA 94801
(510) 236-7435
(FAX) 232-5325

PROJECT:

STUDENT UNION

Diablo Valley College
321 Golf Club Road
Pleasant Hill, CA. 94523

Contra Costa County
Community College District

STAMP:

APPL 6 4:59
N/A N/A GR
4-17-96

APPL. NUMBER:

KEY PLAN:

LICENSED ARCHITECT ★ JAMES CHAPMAN ★ STATE OF CALIFORNIA
10/31/97

SHEET TITLE:

STRUCTURAL SECTIONS

SCALE	
PROJ. NO.	A94087.04

PREPARATION AND REVIEW

PURPOSE	PERSONAL/INITIAL	DATE
DRAWN BY	PAL	04/28/95
PROJ. MGR.	GYN	
PEER REVIEW	XXX	XX/XX/XX

SHEET NUMBER:

S3.6

NUMBER: OF:

HJF

OCT 1 97

19960416 J:\94082\94082S06 1/2"=1'-0"

GENERAL NOTES

~~BIDDING~~

1. ~~All items and installations by equipment contractor, decor contractor and sign fabricator are under a separate contract and not part of general contruction bid. General Contractor and subs are responsible for related work as outlined in the drawings, e.g., provide power to specified location for sign, but sign contractor shall fabricate item and install.~~
2. ~~Exterior illuminated or non-illuminated signs, awnings, ect. shall be under seperate contracts and permits. Application for permits shall be filed with local authority prior to fabrication and installation.~~

SUBSTITUTIONS (SEE SPECIFICATION SECTION 01600 FOR SUBSTITUTION PROCEDURES)

1. When a specific reference to an article, manufacturer, property, name, device, product, material or fixture is made in general construction documents, it is to establish a standard of quality and shall not be constued as limiting competition. ~~If the contractor, sub-contractor, supplier, manufacturer's represenative, etc. involved with the project desires to bid materials other than the specified items, request for approval of like items shall be made in writing project coordinator/owner not later than 5 calender days prior to specified time for general construction bid opening. Materials acceptable for substitution will be approved.~~
2. Submittal for approval of materials or products shall contain sufficient information, description brochures, drawings, samples or other data as necessary or required to determine whether the proposed substitution is equal to the item specified. Each submittal shall be well marked and indentified as to type and kind of items being made. Each submittal for approval of like items, materails or ptoducts will be complete with substantiating data. Reference to catelogs that design construction coordinator may or may not have, will not be acceptable.

CHANGE ORDERS

1. The Contractor shall not make an addition, deletion, or revision to the contract documents which would affect the contract sum or contract time without a written change order authorized and signed by both the owner.

HAZARDOUS MATERIALS NOTES

1. EBRS shall not be held responsible for determining the existence or removal of hazardous or asbestos materials. The owner shall be responsible for the cost of removing and disposing of any hazardous or asbestos materials at the site or contained within the building. Removal method shall be as outlined within the state/local codes, performed by a state licensed contractor and disposed of at an acceptable/licensed dump site. Non-removal of material and resulting fines of construction stoppage shall be the owners responsibility.
2. If necessary, the work shall be coordinated with County Environmental Health and Local Quality Control Management District.
3. Demolition work shall be for removal of non-bearing walls (no structural work required) to allow installation of new utility items.

HEALTH DEPT. NOTES

1. Equipment and installation shall meet all requirements as listed in Senate Bill #775, Chapter 256, as stated in Chapter 4 of California Uniform Retail Food Facilities Law which will be in effect January 1, 1985 for California projects in addition to local and county codes.
2. All food service and related equipment shall be National Sanitation foundation (NSF) approved and in conformity with local health regulations. Installation of equipment shall meet same requirements will be reviewed during Building Department apprization, the owner will have to out separate Health permit. All cracks crevices at joints to be sealed.
3. All adjoining equipment and counters shall be sealed together to prevent the entrance of moisture. All equipment, including shelving, shall be smoothly sealed to the wall to prevent the entrance of splash and debris. All portable or free standing units shall be removable and easily accessible for cleaning.
4. All working surfaces shall be smooth and impervious.
5. Adequate sneeze guard protection must be provided where unwrapped food is displayed or customer's self-service of foods is proposed. Sneeze guard must be constructed of approved design. Maximum opening below sneeze guard is 12". A portable sneeze guard by Health Department during construction inspection.
6. All cutting boards shall be of non-wood construction and NSF approved.
7. All refrigeration equipment and equipment for hot storage shall have thermometers which are easily readable, are in proper working condition and are accurate within a range of plus or minus two degrees. (11) (12) (33) (53) (55)
8. Storage shelving must be specified as having a smooth, non-absorbent finish. The lowest shelf should be 6" above the floor.
9. Exhaust hoods must meet all mechanical code requirements. Canopy hoods shall extend 6" beyond all sides of cooking equipment as measured from the inside edge of the grease trough. Adequate mechanical make-up air must be provided to produce a balanced system (make-up air shall equal exhausted air). See Mechanical drawings.
   (3) (4) (5), (34) (35) (36) (39) Interwire exhaust/make-up air fans.
10. Toilet and dressing rooms shall be mechanically ventilated by exhaust fan(s) to the outside premises. The exhaust fan within each toilet room shall be activated by a switch to the light fixture located therein and capable of 12 air changes per hour. See reflected ceiling plan, sheet no. See Architectural drawings.
11. All areas must have sufficient ventilation to facilitate proper food storage and to provide a reasonable condition of comfort for any employee, consistent with the job performed by the employee.
12. Atmospheric vacuum breakers, or other approved backflow prevention devices, are required at water supply lines to sinks with threaded spigots, dishwasher, garbage disposal flush lines, steam equipment, urinals, toilets, beverage dispensers, ice machine, landscape irrigation system and other fixtures.
13. At least one sink or one sink compartment shall be available for food preparation. Food preparation sinks shall have an indirect sewer connection, i.e. fixed in-line air gap or drain to floor sink through approved air gap. (15)
14. A separate wall-mounted hand wash basin is required within, or adjacent to, the food preparation and packaging area. Provide permanently mounted single-service soap and paper towel dispensers. (16)
15. All sinks to be provide with adequate hot and cold water from mixing faucets. (15) (16) (17) (27) (52)
16. All exposed conduit, plumbing, etc. must be installed at least 6 inches off the floor and 1/2 inch away from walls. All exposed flex conduit is to be sealtight or equivalent.
17. The juncture at the floor and wall must have a coved base with at least a 3/8 inch radius and extending at least 6 inches up the wall. Stationary fixtures or built-in equipment can be sealed on a 4 inch high 3/8 inch radius concrete curb or coved-in position on the floor. If top set coving is used, it must be adequately sealed at the floor with silicone sealant or equivalent to form waterproof seal, See finish schedule, sheet no. See Architectural drawings.
18. Twenty foot candles of light shall be provided for all food preparation area. Minimum of five foot candles of light in storage area. Adequate lighting shall be used over bar sinks and available for cleanup of general premises. See reflected ceiling plan, sheet no. See Architectural drawings.
19. Light fixtures in area where food is prepared or where open food is stored or where utensils are cleaned must have shatterproof shields and shall be readily cleanable. See reflected ceiling, sheet no. See Architectural drawings.
20. Provide automatic door closures on all entry, delivery, restore and change room doors. See hardware/door schedule, sheet no. See Architectural drawings.
21. Building shall be insect and rodent proof. Exterior doors must be self-closing and must come within 1/4' of floor. All vents and other opening to outside need to be sealed or screened, sixteen (16) mesh screening is required on any openable windows.
22. Refuse containers shall be moisture and vermin proof with tight fitting lids.
23. Any trash and garbage storage area receiving food waste or food containers, must have a water bib to facilitate cleaning. Floor, walls and ceiling. Waste water from such cleaning operations must be disposed of as sewage through a floor drain in the trash enclose or the equipment. See Architectural drawings/Site plan.
24. Provide a mop and broom rack and cleaning solution storage shelving away from food preparation and storage area. See Architectural drawings/Janitor room #108.
25. Employee garment change area, separate from restrooms, is required. Cabinets or lockers must be installed in this area. See Architectural drawings.
26. Equipment shall meet or be equivalent to applicable National Sanitation Foundation (NSF) standards, or in the absence of applicable NSF standards, be approved by the enforcement officer. Submit documentation or written verification that only approved commercial equipment will be used (such as equipment brochures, make and model, etc). Meet U.L. Approval.
27. Equipment or utensils used in the preparation, sale, service and display of food shall be made of non-toxic, non-corrosive materials and shall be constructed, installed and maintained to be easily cleaned.
28. Walls and ceiling of all rooms, except bars, where food is stored in unopened containers, and dining areas shall be durable, smooth, non-absorbent and washable. Walls and ceiling of food preparation and utensil washing areas and interior surfaces of walk-in refrigeration units shall also be light colored. See finish/room schedule, sheet no. See Architectural drawings.
29. Each metal sink compartment must be large enough to hold the largest utensils washed in the sink. Every utensil sink must have two (2) metal drainboards. Each metal sink drainboard must be integral with the sink and should be at least as long as one sink compartment. (17)

DEMOLITION NOTES

For reference See Arch. dwgs/spec

1. Complete all demolition work indicated or necessary for completion of the new work including labor, supervision, tools, materials, permits, etc. required for removal of floors, walls, ceilings, fixtures, ductwork, storefronts, etc.
2. All work must comply with applicable local, state, federal codes, standards, etc.
3. Workmanship shall be first class, finished, safe, neat throughout and performed by competent and experienced workman. Constant supervision of work by contractor shall be maintained.
4. Upon termination of work, promptly remove all tools, scaffords, surplus materials, debris, rubbish and other items resulting from demolition of work.
5. The owner, architect and designer assume no responsibility for actual condition of structures, equipment, etc. to be demolished.
6. Owner reserves the right to remove and salvage items prior to the start of work such as doors, windows, hardware, light fixtures, plumbing fixtures, lumber, etc. unless otherwise noted or specified.
7. Remove items with care and stack neatly. No special cleaning and stripping of salvaged items is required unless they are to be reinstalled.
8. Remove items from premises as work progresses. Storage or sale of items on site is not permitted without permission by Owner.
9. Use of explosives will not be permitted.
10. Conduct demolition and removal of debris to insure minimum interference with roads, streets walks and other adjacent occupied or used facilities.
11. Provide protective devices to insure the safe passage of persons around the demolition area. Conduct operations to prevent damage by falling debris to adjacent building, trees, structures, persons, etc. Provide interior and exterior shoring, bracing, etc. to prevent movement, settlement or collapse of structures to be demolished and facilities to remain. If required, erect a 2x4 frame with minimum 3/8" exterior plywood sheathing construction barrier on the sidewalk around perimeter of building. The barrier shall be 8'0" high and have locked door for access. The top plate shall be braced back to the building structure. Minimize amount of power shoots into sidewalk (make any required repairs to sidewalk when barrier is removed). Locate barrier no more than 4'0" from building line (less if required by Building Department).
12. Provide adequate fire protection during demolition work. Place fire extinguishers at jobsite (type and location as directed by fire inspector). Also, existing sprinkler system shall be maintained and not shut down (where necessary, provide temporary support until new piping layout is completed).
13. Promptly repair damages caused to adjacent facilities by demolition operations at no cost to the owner.
14. Shut off and/or disconnect utilities servicing the project as required by work. If possible, remove utility lines back to main switches, shut-off valves or meters. Provide temporary power outlets, lights (as required), hose bibb with water to allow for demolition work.
15. Use suitable methods as necessary to limit the amount of dust and dirt rising and scattering in the air to the lowest level of air pollution practical for the condition of work and comply with governing regulations.

CONSTRUCTION NOTES

For reference See Arch. dwgs/spec

1. Contractor shall verify all conditions and dimensions at job site. ~~Also, review lease agreement with landlord's requirements or conditions.~~ If any discrepancies are found, contractor shall notify the architect/project coordinator.
2. All construction work must conform to current local codes and authorities for building and health departments.
3. Contractor agrees by accepting contract and starting work that he shall assume sole and complete responsibility for job site conditions during the course of construction including safety of all persons and property. This requirement shall apply continuously and not be limited to normal working hours. Contractor shall defend, indemnify and hold the owner, EBRS architect, designer, engineer and landlord harmless from any and all liability, real or alleged, in connection with the performance of work on this project. Contractor shall show proof of worker's compensation insurance as required prior to issuing a permit.
4. Additional on site fire protection during construction to be provided as required by fire inspector or department. Maintain existing fire sprinkler system if applicable to project.
5. All materials stored on the site shall be properly stacked and protected to prevent damage and deterioration until use. Failure to protect materials may be cause for rejection of work.
6. Contractor and sub-contractors shall be responsible for locating, maintaining, relocating and/or removing existing utilities.
7. General Contractor to provide larger stud wall as required for installation of plumbing, electrical, structural items, etc.
8. ~~Existing material on demising or interior partition walls shall be removed by sub-contractors to allow installation of new work, such as electrical outlets, plumbing lines, etc. etc. After work has been completed, tested and approved, walls shall be covered with 5/8" type "x" gypsum board, fired taped and prepared for new finishes. Contractor shall brace entire structure, stairs storefront until complete and functioning as a finished installation and unit.~~
9. All workmanship and material are subject to the approval of the architect/designer and owner.
10. General Contractor to install 2x blocking or 1/2" plywood backing in stud walls for installations of equipment, decor, etc. as required. Verify all locations with equipment contractor and decor contractor. Although typical equipment and decor details will be approved, it will be the responsibility of each subcontractor to provide integral, complete, final installation which meets local codes and design concept. Equipment contractor shall provide backing plan.
11. General Contractor to provide hand fire extinguisher of type and size as required by code and locate as indicated on drawing (for restaurant use). Provide proper identification signs. Install at height not to exceed 5'0". Exact number/location by fire inspector. (8)
    Per UFC Standard No. 10-1, UFC Sec. 10.505(a).
12. Exit doors (see Architectural drawings) shall be left unlocked during all business hours and shall be openable from inside without use of a key or special knowledge or effort. Panic hardware to be provide as per local code requirements. General Contractor to provide a occupancy signage over each exit door, e.g. "This door shall remain open during business hours" or "Exit door only". Sec. 3304(c), Sec. 3317(d).
13. Provide exit sign illumination per UBC Spec. 3313,3314 (c). See reflected ceiling plan, sheet no. See Architectural drawings.
14. General Contractor to provide a occupancy sign with maximum person amount as determined by fire/building department and mount on wall. Sign at least 1'x1' with letters at least 3" hight. See Architectural drawings. Sec. 3320(c).
15. Public areas, toilet, and public circulation areas shall meet height requirements as outlined in the "State of California Architectural Barrier Laws" and Federal ADA. All required toilet accessories, equipment, fixtures shall meet height requirements. Floor plan will allow handicap person fill access to all restaurant activities (dining, bar services, toilet, exits, etc.). See Architectural drawings.
16. ~~If an existing fire sprinkler system is installed, sprinkler contractor shall prepare a revised sprinkler head layout as per the new floor plan. Contractor shall submit drawing for building department approval and take out necessary, increase main size for new head volume. Install dry heads inside each of the walk-in boxes. Where possible, run piping above ceiling and provide all necessary heads, trim pieces, piping, fittings, valves, connections, testing fittings, drains, etc. for a complete system.~~
17. kitchen design includes an exhaust hood system, the grease exhaust duct installation shall conform to the requirements of UBC, UB Mechanical and local ordinances. Provide all required access doors for clean outs in ducts. Where required at turns, elbow, etc., General Contractor to provide drywall (ceiling or wall) metal access doors.
18. Revised or new ventilation/heating ducts (materials, insulation, installation) shall conform to SMACCNA manual for low pressure ducts, 1990 or latest. See Mechanical drawings.
19. ~~Mechanical Contractor to provide toilet and dressing room exhaust fan(s) and duct with wiring by electrician. Optional one fan with time clock for all areas, or individual fans with light switch control (verify). See reflected ceiling plan, sheet no. See Arch./Mech. dwgs.~~
20. Each trade shall be responsible for wall or roof penetrations to the outside of its own equipment, vents, conduit, etc.; including cutting flashing, caulking for a water tight installation. All openings to be approved by landlord.
21. Owner shall pay plan check fees at building and health departments. The General Contractor and subs shall secure all necessary permits, inspections and approval from building department for each specific work unless otherwise noted.

PROJECT DATA

PROJECT NAME: **STUDENT UNION**
ADDRESS: DIABLO VALLEY COLLEGE
321 Golf Club Road
Pleasant Hill, California.

SQUARE FOOTAGE
DINING/SERVICE/KITCHEN/STORAGE: 1382 SQ. FT.

OCCUPANCY: A3

PROJECT SCOPE

ADDITION OF STUDENT KITCHEN / FOOD PREPARATION / SERVY AREAS AT DIABLO VALLEY COLLEGE STUDENT UNION. FACILITY TO HAVE COOKING, HOODS WITH EXHAUST / MAKE-UP AIR SYSTEM. SCOPE OF EBRS DRAWINGS IS FOR EQUIPMENT LAYOUT AND ITS RELATED UTILITY MECHANICAL CONNECTIONS. FOR INFORMATION ON ARCHITECTURAL DETAILS, ENGINEERING, LIGHTING, FINISH MATERIALS, ETC., SEE ARCHITECTURAL BY INTERACTIVE RESOURCES.

SHEET INDEX

FS1	PROJECT DATA, SHEET INDEX, SYMBOLS, NOTES.
FS2	EQUIPMENT SCHEDULE, PLAN
FS3	PLUMBING SCHEDULE/PLAN/NOTES
FS4	ELECTRICAL SCHEDULE/PLAN/NOTES.
FS5	HOOD DATA

LEGEND & SYMBOL

Symbol		Abbreviation	
NORTH ARROW		℄	CENTERLINE
		FOW	FACE OF WALL
INTERIOR ELEVATION REFERENCE		FOS	FACE OF STUD
		FOM	FACE OF MASONRY
COLUMN LINE		FOC	FACE OF CONCRETE
		FOB	FACE OF BLOCK
		FOE	FACE OF EQUIP. BASE
DETAIL NO. SHEET NO.		AFF	ABOVE FINISH FLOOR
		RO	ROUGH OPENING
DOOR NO. DOOR TYPE		FD	FLOOR DRAIN
		FS	FLOOR SINK
EQUIPMENT ITEM NO.		FFD	FUNNEL FLOOR DRAIN
		HD	HUB DRAIN
LIGHT FIXTURE ITEM NO.		GC.	GENERAL CONTRACTOR
		ELEC.	ELECTRICIAN
FINISH MATERIAL ITEM NO.		PLBR.	PLUMBER
		MECH.C.	MECHANICAL CONTRACTOR
PLYWOOD BACKING FOR EQUIPMENT		D.C.	DECOR CONTRACTOR
		E.C.	EQUIP. CONTRACTOR
REVISION NO. (WITH DATE).			

HAF
OCT 1, 97

REVISION	DATE	DESCRIPTION	INITIAL

ISSUE FOR PROGRESS REVIEW	DATE:
ISSUE FOR PLAN CHECK	OFS 10/9/95
ISSUE FOR PERMIT	
ISSUE FOR BID	4/4/96
ISSUE FOR CONSTRUCTION	

SEAL:
10/31/96 [signature]

CONSULTANT:

East Bay RESTAURANT SUPPLY, INC. Since 1934
49 FOURTH STREET OAKLAND, CA 94607
Voice: (510) 465-4300 Fax: (510) 465-3521
Design and Supply for Hotels, Restaurants and Institutions

INTERACTIVE RESOURCES
ARCHITECTURE • PLANNING • ENGINEERING
117 PARK PLACE
POINT RICHMOND
CALIFORNIA 94801
(510) 236-7435
(FAX.) 232-5325

PROJECT:
STUDENT UNION

Diablo Valley College
321 Golf Club Road
Pleasant Hill, CA. 94523

Contra Costa Community College District

STAMP:
GR 4-17-96
APPL. NUMBER:

KEY PLAN:

SHEET TITLE:
FOODSERVICE GENERAL INFORMATION & NOTES

SCALE		
PROJ. NO.	A94087.04	
PREPARATION AND REVIEW		
PURPOSE	PERSONAL/INITIAL	DATE
DRAWN BY		04/26/95
PROJ. MGR.	GYN	
PEER REVIEW	XXX	XX/XX/XX

SHEET NUMBER:
FS1

NUMBER: OF:

EQUIPMENT SCHEDULE

ITEM NO.	SUPP. BY	INST. BY	QTY.	DESCRIPTION / MANUFACTURER/MODEL
1	OWNER	G.C.	1	CUST FAB. (4) INDIVIDUAL OPEN BURNER, STD. OVEN BASE, 36"x26"x34" HI. S/S FINISH. IMPERIAL (GAS)
2	G.C.	G.C.	1	FLUE GUARD. CUSTOM FAB.
3	G.C.	G.C.	1	S/S CANOPY, TYPE I HOOD, EXHAUST ONLY W/ LIGHTS & FILTERS. 4'0"x4'0"x2'0"
4	G.C.	G.C.	1	EXHAUST FAN & DUCTWORK FOR HOOD #1
5	G.C.	G.C.	1	MAKE-UP AIR FAN AND DUCTWORK FOR HOOD #1 W/ OBL REGISTERS.
6	G.C.	G.C.	1	FIRE SUPPRESSION SYSTEM FOR HOOD #1. WET CHEM. FOR HOOD #3. MEET UL 300 LISTING ANSUL R 102 OR EQ.
7	OWNER	G.C.	1	S/SWORKTABLE W/ UNDERSHELF, NO SPLASH, CASTERS & LOCKING DEVICE. 24"x48"x34"HI. TABCO 1SS-244/TA-25
8	O.F.	G.C.	2	FIRE EXTINGUISHER. TYPE, SIZE, LOCATION PER FIRE INSPECTION (40 B.C. RATING)
9	OWNER	G.C.	1	ICE MACHINE (CUBER) / BIN. S/C. AIR COOLED W/ FILTER MANITOWOC B-320/C-420
10	OWNER	G.C.	1	SAME AS (7) EXCEPT NO UNDERSHELF & HEIGHT = 30"
11	OWNER	G.C.	1	UNDERCOUNTER FREEZER, 1 SECTION REMOTE REFRIG. COND. SEE #58 SET UNDER #13. W/ DRAIN DELFIELD 7/8320-F-28
12	OWNER	G.C.	1	UNDERCOUNTER REFRIG. 1 SECT. REMOTE REFRIG. COND. SEE #59 SET UNDER #13. W/ DRAIN DELFIELD V18372-28
13	G.C.	G.C.	1	S/S "L" SHAPED COUNTERTOP/TABLE W/ 4" AT (1) END/BACK SPLASH 30"x86"-78"x36" HI. CUSTOM FAB.
14	G.C.	G.C.	1	S/S "L" SHAPED DOUBLE WALL SHELVING. 12"x107"-84". MTD. ABOVE #13. W/ WALL BRACKETS
15	G.C.	G.C.	1	S/S 2 COMP. SINK. W/ DECK MTD. FAUCET. SINK COVER. SET IN #13. PART OF #13 CUSTOM FAB.
16	G.C.	G.C.	1	S/S WALL MTD. HANDSINK W/FAUCET, BUILT-IN SOAP/TOWEL DISPENSER ADVANCE TABS-80
17	G.C.	G.C.	1	S/S SINKTABLE W/ (3) 18"x18"x14" BOTSINK, W/ BOTH RAISED & BACK SPLASH. PARTIAL UNDERSHELF. WEST STAR 3WSP3909-CDBO
18	G.C.	G.C.	1	SPLASH MTD. PRERINSE FAUCET/HOSE/ADD ON SPOUT. SET INTO #17 FISHER 2210-1WB-2801-10
19	G.C.	G.C.	1	S/S WALL MTD. POTRACK, 48" LONG. MTD. ABOVE #17 LAMBERTSON SUPR-48
20	G.C.	G.C.	1	SPLASH TRAP FLUSH MTD. RECESSED INTO FLOOR
21	G.C.	G.C.	1	S/S SLANTED RACK, 22"X5'2" MTD. ABOVE #17 CUSTOM FAB.
22	OWNER	G.C.	1	UNDERCOUNTER LOW TEMP DISHWASHER W/ SIDE S/S PANELS SET UNDER #17 HOBART LX-180
23	G.C.	G.C.	1	S/S 18EL WALL SHELF. 12"x36" W/ WALL BRACKETS CUSTOM FAB.
24	OWNER	O.F.	1	OVEN SUPPORT STAND SEE ARCH. DWGS FOR ADDITIONAL INFORMATION. VERIFY W/ OVEN MFG. PRIOR TO CONSTRUCTION.
25	OWNER	G.C.	1	PIZZA OVEN BAKERS PRIDE FC-518 (GAS)
26	-	-	0	SPARE NO.
27	OWNER	G.C.	1	PASTA COOKER/RINSE UNIT W/ BUILT-IN POT FILLER FAUCET PITCO PRG-14L (GAS)
28	OWNER	G.C.	1	36" RESTAURANT RANGE W/ 6 OPEN BURNER, STANDARD OVEN BASE & HIGH SHELF W/ HIGH SHELF MTD. SALAMANDER MONTAGUE 136-6-SB36 (GAS)
29	G.C.	G.C.	1	AIR CURTAIN MARS
30	-	-	0	SPARE NO.
31	OWNER	G.C.	1	32" BROILER W/ STAND BAKER PRIDE DGBR-2 (GAS)
32	OWNER	G.C.	1	ROTARY SPIT. PART # #31 BAKER PRICE HD-2
33	OWNER	G.C.	1	42" WORKTOP REFRIG. 2 SECT. REMOTE REFRIG. SEE #60 W/ DRAIN DELFIELD V18342
34	G.C.	G.C.	1	S/S CANOPY TYPE I HOOD W/ FILTERS, LIGHTS, EXHAUST ONLY. 3'0"x14'0" CUSTOM FAB.
35	G.C.	G.C.	1	EXHAUST FAN & DUCTWORK FOR HOOD #34 & 39 -
36	G.C.	G.C.	1	MAKE-UP AIR FAN & DUCTWORK FOR HOOD #34 & #39. W/ CEILING REGISTER -
37	G.C.	G.C.	1	FIRE SUPPRESSION SYSTEM FOR HOOD #34, #39. WET CHEM. MEET UL LISTING 300 ANSUL R102 OR EQ.
38	G.C.	G.C.	1	S/S WALL LINING UNDER HOOD #34. 9'0" H x 8'0"
39	G.C.	G.C.	1	S/S CANOPY TYPE I HOOD W/ FILTERS, LIGHTS, EXHAUST ONLY. 3'9"x9'0" CUSTOM FAB.
40	-	-	0	SPARE NO.
41	-	-	0	SPARE NO.
42	-	-	0	SPARE NO.
43	OWNER	G.C.	2	ESPRESSO GRINDER. SET ON #201 -
44	OWNER	G.C.	1	ESPRESSO MACHINE W/ FILTER. SET ON #33 BLICKMAN CEE-66-2
45	OWNER	G.C.	1	WASTE RECEPTACLE. SET UNDER #201
46	OWNER	G.C.	1	S/S ICE BIN CUSTOM FAB.
47	OWNER	G.C.	1	S/S CORNER ICE BIN. W/ DRAIN CUSTOM FAB.
48	OWNER	OWNER	1	CASH REGISTER. SET ON 201
49	G.C.	G.C.	1	S/S WALL MTD. SOAP AND TOWEL DISPENSER. -
50	-	-	0	SPARE NO.
51	G.C.	G.C.	1	S/S WORKCOUNTER. SHAPE, SIZE PER PLAN
52	G.C.	G.C.	1	S/S DROP-IN HAND SINK W/ DECK MTD. FAUCET. SET INTO #52 POLAR WARE K1734C
53	OWNER	G.C.	1	24" UNDERCOUNTER REFRIG. 1 SECT. REMOTE REFRIG. COND. SEE #60. W/ DRAIN DELFIELD V18324-28
54	OWNER	G.C.	1	7 QT. SOUP WARMER W/ DRAIN. SET INTO #51 WELLS SS-80
55	OWNER	G.C.	2	48" REFRIG. SANDWICH TABLE. REMOTE REFRIG. COND. SEE #61. W/ DRAIN DELFIELD V18148/V18248-28
56	G.C.	G.C.	1	S/S FILLER. SET BETWEEN #55 CUSTOM FAB.
57	G.C.	G.C.	1	WORK COUNTER. (SEE K1B/A9.2)
58	OWNER	G.C.	1	REMOTE REFRIG. COND. FOR #11 1/4 HP SIZE. ON ROOF; PROVIDE EXTERIOR HOUSING FOR #58, 59, 60, 61
59	OWNER	G.C.	1	REMOTE REFRIG. COND. FOR #12 1/3 HP SIZE, LOCATE ON ROOF
60	OWNER	G.C.	1	REMOTE REFRIG. COND. FOR #33 #53. 1/3 HP SIZE LOCATE ON ROOF
61	OWNER	G.C.	1	REMOTE REFRIG. COND. FOR #55 1/4 HP SIZE LOCATE ON ROOF
62	-	-	0	SPARE NO.
63	OWNER	G.C.	1	FLATWARE HOLDER SET ON #203 RUBBERMAID 1262
64	OWNER	OWNER	LOT	NAPKIN HOLDER. SET ON #203
65	OWNER	OWNER	1	WASTE RECEPTABLE. SET INTO #203
66	OWNER	OWNER	1	TRAY SLIDE UNIT. SET INTO #203 RUBBERMAID 3424
201	G.C.	G.C.	1	SERVICE COUNTER. SEE ARCH. FOR ADDITIONAL DETAIL
202	G.C.	G.C.	1	DINING PICKUP COUNTER. SEE ARCH. FOR ADDITIONAL INFORMATION
203	G.C.	G.C.	1	EQUIPMENT FITTING COUNTER. SEE ARCH. FOR ADDITIONAL INFORMATION

SEE ADDENDUM 2 REGARDING DISTRICT FURNISHED EQUIPMENT

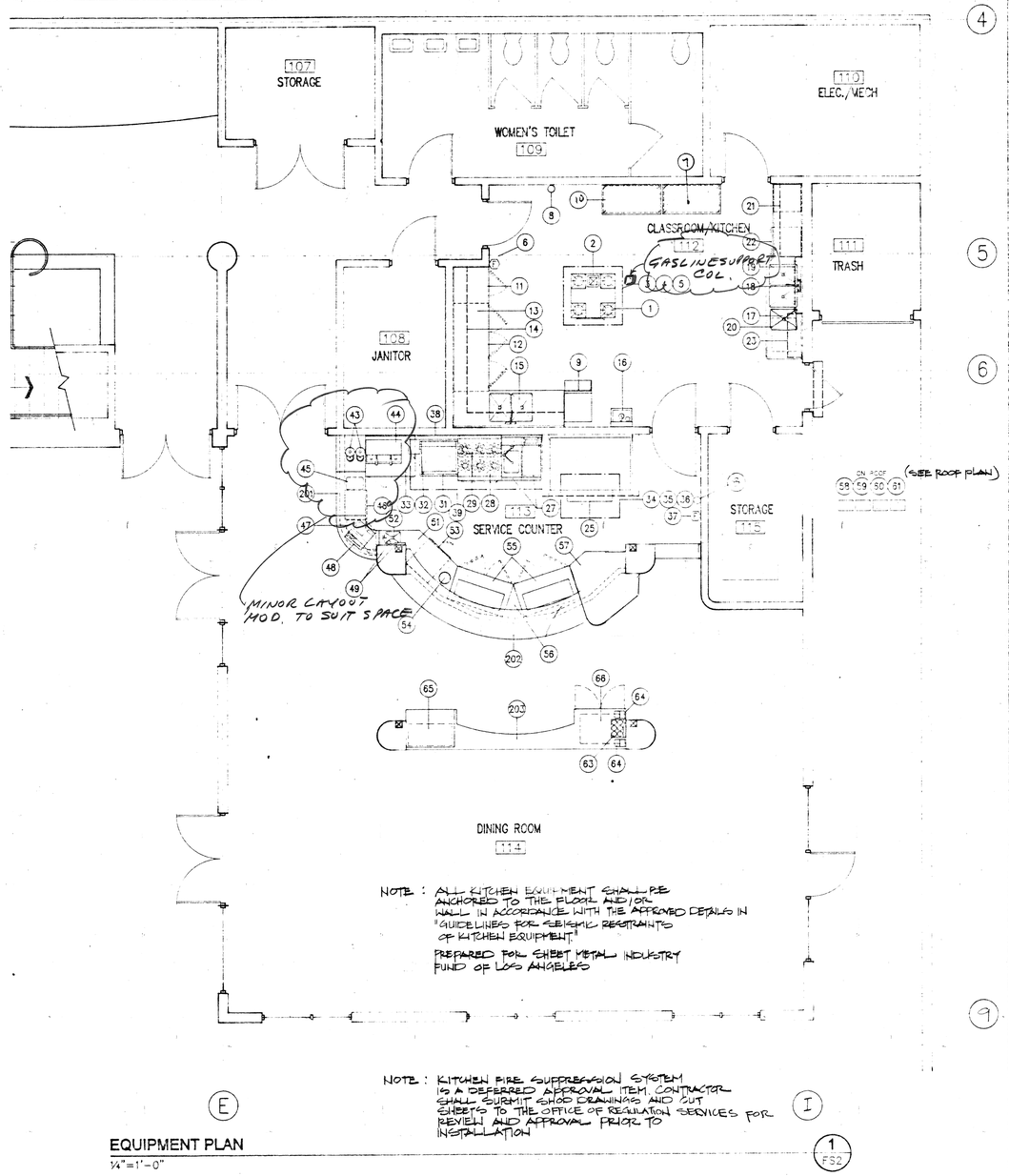

EQUIPMENT PLAN
1/4"=1'-0"
1 FS2

HAF
Oct, 97

REVISION	DATE	DESCRIPTION	INITIAL
2	6-17-96	HEALTH DEPT.	

ISSUE FOR PROGRESS REVIEW	DATE:
ISSUE FOR PLAN CHECK	ORS 10/9/95
ISSUE FOR PERMIT	
ISSUE FOR BID	4/2/96
ISSUE FOR CONSTRUCTION	

SEAL:

10/31/96

CONSULTANT:

East Bay Since 1934 RESTAURANT SUPPLY, INC.
49 FOURTH STREET OAKLAND, CA. 94607
Voice: (510) 465-4300 Fax: (510) 465-3521
Design and Supply for Hotels, Restaurants and Institutions

INTERACTIVE RESOURCES
ARCHITECTURE • PLANNING • ENGINEERING
117 PARK PLACE
POINT RICHMOND
CALIFORNIA 94801
(510) 236-7435
(FAX.) 232-5325

PROJECT:

STUDENT UNION

Diablo Valley College
321 Golf Club Road
Pleasant Hill, CA. 94523

Contra Costa
Community College District

STAMP:

GR 4-17-96

APPL. NUMBER:

KEY PLAN:

SHEET TITLE:

FOODSERVICE EQUIPMENT PLAN SCHEDULE & NOTES

SCALE	1/4"=1'-0"
PROJ. NO.	A94087.04 (ERR. #295)
PREPARATION AND REVIEW	
PURPOSE	PERSONAL INITIAL DATE
DRAWN BY	Kenneth Lim 09/13/95
PROJ. MGR.	GYN
PEER REVIEW	XXX XX/XX/XX

SHEET NUMBER:

FS2

NUMBER: OF:

PLOT DATE: 10-4-995

PLUMBING SYMBOLS

- COLD WATER INLET
- HOT WATER INLET
- SHUT OFF VALVE (S.O.V.)
- DIRECT WASTE CONNECTION
- INDIRECT WASTE CONNECTION
- FLOOR SINK
- FLOOR SINK ROUND
- FLOOR DRAIN
- FUNNEL FLOOR DRAIN
- GAS LINE CONNECTION
- (P) ITEM IS SUPPLIED & INSTALLED BY CONTRACTOR
- (E) ITEM IS SUPPLIED BY EQUIP. CONTRACTOR AND INSTALLED BY PLUMBER
- (O) ITEM IS SUPPLIED BY OWNER AND INSTALLED BY CONTRACTOR
- (X) ITEM IS EXISTING WHICH MAY BE REPAIRED, RELOCATED OR REPLACED
- (V) ITEM IS SUPPLIED BY VENDOR AND INSTALLED BY PLUMBER
- [1] REFRIGERATION LINE
- CW COLD WATER
- HW HOT WATER
- W WASTE (DIRECT CONNECTION)
- IW INDIRECT WASTE (AIR GAP)
- V VENT
- HGT HEIGHT (STUB OUT LOCATION)
- LAV LAVATORY
- WC WATER CLOSET
- UR URINAL

PLUMBING SCHEDULE

ITEM NO.	DESCRIPTION	QTY.	MFR.	MODEL NO.	BY	SUPPLY CW	SUPPLY HW	SUPPLY HT.	WASTE DIR.	WASTE INDIR	WASTE HT.	WASTE VENT	GAS KBTU	GAS CONN.	GAS HT.	REMARKS
1	(4) HOT TOP W/ OVEN BASE	1	IMPERIAL	CUST. FAB.	O								115	¾"	STUB	PROVIDE S.O.V. PIPING/FITTING TO UNIT CONNECTION
6	FIRE SUPPRESSION SYSTEM	1	ANSUL	R. 102	P											ANSUL INSTALLER TO PROVIDE GAS SOLENOID SHUT-OFF VALVE AS SIZED BY PLUMBER. PLUMBER TO INSTALL VALVE; VERIFY LOCATION.
9	ICE MACHINE/BIN/WATER FILTER	1	MANITOWOC	B 320 C 420	O	½"		60"		½" ½"						PROVIDE CW. S.O.V., PIPING/REDUCING FITTING TO FILTER TO ICEMAKER. INSTALL WATER FILTER. RUN INSULATED INDIRECT WASTE TO FLR. SINK W/ 1" AIR GAP.
11	UNDERCOUNTER FREEZER	1	DELFIELD	V18930-F 28	O					½"						RUN INSULATED INDIRECT WASTE TO FLR. SINK W/ 1" AIR GAP.
12	UNDERCOUNTER REFRIG.	1	DELFIELD	V18372-28	O					½"						RUN INSULATED INDIRECT WASTE TO FLR. SINK W/ 1" AIR GAP.
15	2 COMP. SINK W/ DECK MTD. FAUCET	1	CUST. FAB. FISHER	– 3312	P	½"	½"	12"		1½"						PROVIDE CW/HW S.O.V. PIPING/FITTING TO FAUCET. INSTALL FAUCET. RUN INDIRECT WASTE TO FLOOR SINK W/ 1" AIR GAP
16	WALL MTD. HAND SINK	1	ADVENCE	7-PS-80	P	½"	½"	18"	1½"		24"	1½"				PROVIDE CW/HW S.O.V. PIPING/FITTING TO FAUCET.
17	2 COMP. WASH SINK	1	CUST. FAB.	–	P				1½"			1½"				PROVIDE DIRECT WASTE W/ "P" TRAP
18	FAUCET	1	FISHER	2210-1WB 2901	P	½"	½"	12"								PROVIDE S.O.V. PIPING/FITTING TO FAUCET. INSTALL FAUCET
20	GREASE TRAP	1	–	–	P											PROVIDE/INSTALL TRAP W/ REQ'D FITTINGS
22	DISHWASHER	1	HOBART	LX 18C	O		½"	12"		¾"						PROVIDE S.O.V. PIPING/FITTING TO UNIT CONNECTION. RUN INDIRECT WASTE TO FLOOR SINK W/ 1" AIR GAP.
25	PIZZA OVEN	1	BAKER PRIDE	FC-516	O								130	¾"	24"	PROVIDE S.O.V. PIPING/FITTING TO UNIT CONNECTION
27	PASTA COOKER	1	PITCO	PPG-14L	O	½"	½"	12"		1¼"			52.5	¾"	12"	PROVIDE S.O.V. PIPING/FITTING TO UNIT CONNECTION. RUN INDIRECT WASTE TO FLR. SINK W/ 1" AIR GAP
28	(6) OPEN BURNER RANGE W/ OVEN BASE/SALAMANDER	1	MOTAGUE	136-5 SB-36	O								192	¾"	30"	PROVIDE S.O.V. PIPING/FITTING TO UNIT CONNECTION. INSTALL PRESSURE REGULATOR
31	BROILER	1	BAKER PRICE	SGRB-2	O								84	¾"	24"	PROVIDE S.O.V. PIPING/FITTING TO UNIT CONNECTION. CAP END. FRONT MANIFOLD CONNECTION
33	REFRIG. CABINET	1	DELFIELD	V18342-28	O					½"						RUN INSULATED INDIRECT WASTE TO FLOOR SINK W/ 1" AIR GAP
37	FIRE SUPPRESSION SYSTEM	1	ANSUL	R 102	P											ANSUL INSTALLER TO PROVIDE GAS SOLENOID SHUT-OFF VALVE AS SIZE BY PLUMBER. PLUMBER TO INSTALL VALVE
44	ESPRESSO MACHINE	1	BLICKMAN	CEE-86-2	O	½"		12"		½"						PROVIDE CW S.O.V. PIPING/REDUCING FITTING UNIT CONNECTION. RUN INDIRECT WASTE TO FLOOR SINK W/ 1" AIR GAP
46	ICE BIN	1	CUST. FAB.	–	O					½"						RUN INDIRECT WASTE TO FLOOR SINK W/ 1" AIR GAP.
47	ICE BIN	1	CUST. FAB.	–	O					½"						RUN INDIRECT WASTE TO FLOOR SINK W/ 1" AIR GAP.
52	DROP-IN HAND SINK W/ DECK MTD FAUCET	1	POLARWARE	K1734C	P	½"	½"	12"	1½"		24"	1½"				PROVIDE CW/HW S.O.V. PIPING/FITTING TO UNIT CONNECTION.
53	UNDERCOUNTER REFRIG.	1	DELFIELD	V18324-28	O					½"						RUN INSULATED INDIRECT WASTE TO FLOOR SINK W/ 1" AIR GAP
55	REFRIG. SANDWICH TABLE	2	DELFIELD	V18348-28	O					½"						RUN INSULATED INDIRECT WASTE TO FLOOR SINK W/ 1" AIR GAP
P1	FLOOR SINK	5	BY PLUMBER	ENAMEL 12"x12"x8"	P				2"		STUB	1½"				SET FLOOR SINK 1" ABOVE FIN. FLR. PROVIDE "P" TRAP UNDER FLOOR.

REFRIGERATION SCHEDULE

REF NO.	ITEM NO.	REFRIG. EQUIPMENT ITEM NO. DESCRIPTION	FIXTURE TEMP.	LINE RUN	LIQUID LINE	SUCTION LINE	CONDENSOR ELEC. REQ.	COND COOLING BTU	COND. LOCATION	REF LINE LOCATION	REMARKS
1	11	UNDERCOUNTER FREEZER (11)	5°	–	SIZE BY REF.CONT.	SIZE BY REF.CONT.	120/1ø/ 1/3HP		ON ROOF	WALL STUB +12"	UNIT AIR COOLED
2	12	UNDERCOUNTER REFRIG. (12)	38°	–	SIZE BY REF.CONT.	SIZE BY REF.CONT.	120/1ø/ 1/3HP		ON ROOF	WALL STUB +12"	UNIT AIR COOLED
3	33	REFRIG. CABINET (33)	38°	–	SIZE BY REF.CONT.	SIZE BY REF.CONT.	120/1ø/ 1/2HP		ON ROOF	WALL STUB +12"	UNIT AIR COOLED
	53	UNDERCOUNTER REFRIG. (53)	38°	–	SIZE BY REF.CONT.	SIZE BY REF.CONT.			ON ROOF	WALL STUB +12"	UNIT AIR COOLED
4	55	2 REFRIG SANDWICH TABLE (55)	38°	–	SIZE BY REF.CONT.	SIZE BY REF.CONT.	120/1ø/ 1/2HP		ON ROOF	WALL STUB +12"	UNIT AIR COOLED

PLUMBING NOTES

For refrence see Architectural / Engineering specs.

1. Comply with all County, State and Federal codes, ordinances, rules and regulations, including all requirements of serving agencies. Pay all costs required for meter installation, sewer taps, building application fees, etc.
2. Engineer and/or Plumber to refer to all sheets and specifications prior to any bidding. Any discrepancies in drawing or job site conditions shall be notes and indicated on the bid submittal.
3. Plumber to review existing conditions and determine if existing sewer/drainage system will allow for proper drain pipe slope to new fixtures.
4. Plumber shall provide all water, sewer, vent, gas lines, etc. inside demised premise and to connection points outside space. All lines shall run below floor, in walls or above ceiling. Plumber to complete all trenching and back fill required for underground installations. Plumber to install fire suppression solenoid valve
5. Plumber/General Contractor to coordinate floor, wall and ceiling penetrations with other trades. Work to avoid conflicting rough-in installations. Review with Project Coordinator.
6. Plumber to provide water connections, floor sinks and drains for all fixtures as required. Plumber to connect all water lines and drains to equipment and fixtures. Plumber to install fire suppression system solenoid valve.
7. ~~Soil, waste, drain and venting below and inside building to be service weight, no hub, cast iron, except for vents and smaller use cooper pipes or galvanized steel.~~
8. ~~PVC and ABS pipes not approved by local codes are not acceptable.~~
9. ~~Install floor, wall or ceiling cleanout where required by code or where it will allow for best access for cleaning out blockage in pipes.~~
10. ~~Water piping above ground shall be type "M" hard drawn copper~~
11. ~~Water piping below ground shall be type "L" soft drawn copper. All joints shall be made above grade and concrete slab (no concealed joints).~~
12. ~~Indirect drawn lines shall be type "L" soft drawn copper with sweat solder joints.~~
13. All horizontal dimensions are taken from face of stud (FOS) or face of wall (FOW) to centerline of pipe unless otherwise noted.
14. All pipes noted up 12", etc. to stub out of wall at height given. Pipe height is from finished floor (AFF) to centerline of pipe and not from subfloor, concrete slab or top of equipment base.
15. Plumber to run all indirect lines and drains to appropriate floor drain (number of drains to match floor sink capacity). (9)(11)(12)(15)(22)(27)(44)(52)
16. Floor sink installation is critical and must be placed exactly according to plan dimensions. Any discrepancies shall be reviewed with Project Coordinator or Equipment Supplier. Floor sinks shall be installed 1" above finished floor (so sink are not used as drains); therefore, review all floor finishes and thicknesses with General Contractor prior to setting in field. Plumber shall check all sink elevations prior to pouring of concrete slab or tile mortar bed. Size of floor sink shall be 12"x12"x8" deep. (P1)
17. Install dielectric fittings between ferrous and non ferrous materials.
18. Provide shut off valve (SOV) and back pressure check air chamber at each water stub out or fixture.
19. Plumber to provide valves and fittings necessary to connect all lines even if they are not provided with equipment either supplied by others or by the Plumber.
20. Plumber to provide escutcheon covers, rings etc. at all floor, wall and ceiling penetrations for plumbing lines and/or fixtures. All gaps, holes etc. around lines at penetrations shall be sealed and caulked solidly as per Health Department requirements.
21. Plumber to drain all noted refrigeration units to floor sinks, including refrigerator coils, unless otherwise noted. (9)(11)(12)(33)(53)(55)
22. Plumber to provide interior hose bibbs as indicated on drawings or as directed by inspector. Provide vacuum breaker type at each unit. In public areas (toilets) bibbs shall be key-type operation for security reasons. See Engineering drawings.
23. Plumber to furnish and install pressure regulator relief valve and check valve on main supply to space to insure that water pressure does not exceed 60 PSI. Provide main shut off valve and locate for easy access by Owner. See Engineering drawings. Verify with existing service.
24. Plumber to connect equipment to existing hot water source. See Mechanical drawings.
25. Installation insulation around all hot water piping in wall or above ceilings. Insulate drain lines from ice sinks, ice bins, or ice pans to eliminate condensation on these items.
26. Engineer to furnish, locate and install grease trap or interceptor as required by local code. Plumber shall connect fixture waste lines to grease trap as required by code.
27. All waste and water piping penetrating concrete floor slab shall be wrapped for protection.
28. Plumber to maintain 10'-0" minimum separation between vents through roof and outside air intakes. ~~Verify if existing vents can be reused, if not, provide new one to roof.~~
29. All floor sinks to be supplied with acid resisting enameled cast iron grate with ¼ opening and dome strainer. (P1)
30. Provide a vacuum breaker or back flow prevention device at mop sink (integral part of faucet). See Mech. dwgs.
31. Provide waterproof membrane at all floor drains and floor sinks when floor is over open space.
32. Securely fasten all piping to the building structures by means of hangers, supports, guides, anchors and sway braces to maintain pipe alignment, to prevent sagging and to prevent noise and excessive strain on piping due to movement under operating conditions.
33. ~~Pipe hangers shall be designed to support weight of pipe and weight of the contents in the pipe.~~
34. ~~Provide a hanger not more than 12" from the point of change of direction of a pipe run in both horizontal and vertical plan.~~
35. Do not support piping or valves from equipment pieces.
36. Do not spring or force piping during installation.
37. ~~Do not sleeve structural members without consent of the Architect/Engineer. Review alternative layout of runs prior to placing any sleeves. If necessary, Plumber shall be responsible for X-raying slab to determine concealed members (e.g. post tension slab with cables).~~
38. ~~Provide a tight seal of incombustible material around all pipes which penetrate fire separations. Provide collars or trim ring around piping to retain packing.~~
39. ~~Slope all drainage piping within the building with a minimum flow fall of ¼" per foot.~~
40. Install all piping concealed in walls, below floors, above ceilings or furred out drywall areas.
41. Hot and cold running water under pressure shall be provided in all areas in which food is prepared or utensils are washed. All handwashing facilities shall be equipped with hot and cold running water per Health Department. (15)(16)(18)(52)
42. Per Health Department requirement, a temperature gauge shall be installed in HW to dishwasher as close as possible to entry into machine. Also, a gauge cook shall be attached as close as possible to temperature gauge for the purpose of testing the accuracy of the install thermometer. Verify. (22)
43. If required by Building Department, the Engineer, under his contract, shall provide drawings or diagrams of piping layout, sewer pipe sizes, venting connections, etc.
44. ~~Engineer shall determine total project requirements and determine size of service is required for gas or water. If required, plumber bid price shall include work for new meters, piping and service connection. Coordinate as soon as possible with local serving agency and Water Department.~~
45. Plumber shall review operation of equipment, location of valves, etc. with the Owner and/or his representative at the completion of the project.
46. Fixture inlets and outlets with hose attachments which may constitute a cross-connection shall be protected by an approved, non-removable type backflow prevention device or by an approved vacuum breaker installed at least 6" above the highest point of usage and located on the discharge side of the last valve.
47. Floor sinks or other indirect waste receptors must be readily accessible for cleaning. (P1)
48. Protect water line connections to equipment with approved air gap or approved backflow preventer. Provided by Plumber at espresso machine, verify with inspector(s). Provide by plumber at coffee machines, espresso, drink dispenser, etc. Verify with inspector.
49. Dishwashing machines may be connected directly to the sewer immediately downstream from a floor drain or floor sink, or they may be drained through an approved indirect connection, such as to a floor sink of adequate capacity. (22)
50. All floor drains shall have automatic trap priming devices UPC section 707

REFRIGERATION NOTES

1) Furnish and install a fully automatic balanced refrigeration system and components as indicated on the drawings with start-up and service on self-contained and remote systems as part of the general contract.

2) All equipment and materials shall be the standard product of the manufacturer and shall be Underwriter's Laboratories approved and/or local city or county approved. The condensing units, evaporators, valves, dehydrators, oil filters and controls shall be, wherever possible, of the same manufacturer of each class of equipment. All equipment and installation methods shall be performed in a workmanlike manner and comply with local building codes and/or ordinances and specifications noted herein.

3) The burden of proof for equality of material other than specified shall rest with the bidder proposing such substitutions to the satisfaction of the Owner and/or his representatives.

4) Each refrigeration system shall consist of the following:
   a. Condensing unit as specified in schedule.
   b. Blower coil as specified in schedule.
   c. Liquid line drier.
   d. Liquid indicator for each condensing unit located in the liquid line at the compressor.
   e. Necessary type K or L copper tubing to make up a complete refrigerant circuit and sized to maintain a maximum pressure drop under normal operating temperature of two pounds per square inch.
   f. Low pressure control switch to control the operation of each condensing unit.
   g. Sufficient quantity of Freon 22 to insure proper operation.
   h. Necessary labor and materials to make a complete and operating refrigeration system.

5) Shop drawings and manufacturer's catalog. Furnish drawings showing refrigeration lines and line sizes, required wiring, and equipment, to the Project Coordinator for approval prior to commencement of any work.

6) The condensing units are to be mounted in the space provided, placed to take advantage of the air circulation. The condensing units shall be connected to the evaporators with soft drawn copper tubing which shall be installed in the building, complete with hangers and all other accessories by this contractor, including required insulation.

7) Compressors and evaporators shall be located in the general area indicated on the plans. Consideration must by given to special conditions that may arise at the jobsite. Copper tubing and component parts shall be placed in the fixtures, equipment and building using the utmost care not to interfere in any way with access areas usable storage area or fixtures and equipment of any other trade.

8) ~~If required, supply a steel rack for stacking remote compressors and or/air-cooled condensers constructed of 10 gauge galvanized steel and include as a part of the refrigerat~~ NOT APPLICABLE ~~compressor rack shall be cons~~ ~~of 2" x 2" x 1/8" black ir~~ ~~construction and painted with a minimum of two coats of black paint or of Unistrut Construction, or equal, to house compressors as indicated on drawing.~~

9) Copper fittings shall be seamless and wrought copper. All piping shall be type L, ARC hard. Soft copper to be used only where necessary. If underground run is used, soft copper, with no joints or welds, to be installed through PVC (supplied by Plumber). Long radius 90 degrees to be used for suction lines. Copper joints to be made with 15% sil-flos, copper to brass with 45%.

10) Refrigerant piping shall be installed to eliminate noise and vibration transmitted through the building. Furnish and install all necessary hangers and supports for piping.

11) Suction lines shall be sized to give minimum pressure drop from evaporator to compressor, (2 pounds for medium or high temp and 1 pound for freezer systems), but sized for proper oil return and so that gas velocities in risers shall not be less than 1500 FPM.

12) Suction lines for low temps are to be insulated with 3/4" Armaflex. Suction lines for all other systems to be insulated with 1/2" Armaflex. Suction lines to be insulated from evaporators to compressor rack. All joints glued.

13) Slant suction lines 1/4" per 10 feet toward compressors on horizontal runs for proper oil return.

14) P-traps are to be installed in suction lines for all low temperature systems and piped for oil return.

15) Charging the systems: Provide freon and oil, charge the systems and run an operational check on all systems of three days duration. All low temp units are R-502, hi temps are R-22, or charge units with specified freon as indicated by manufacturer. (All systems to be evacuated to 500 microns before charging).

16) All systems to be pressure tested for leaks, nitrogen test of 250 lbs. for 48 hours and leak test with refrigerant.

17) ~~Walk-in evaporators to be mounted from ceiling. Seal box penetrations with silicone and/or foam as required. Manufacturers instructions supplied with each unit. Position evaporators as per pictoral su~~ NOT APPLICABLE ~~stat in area of return ai~~ ~~need wired by Electrici~~ ~~g prior to equipment start-up. Necessary thermostatic expansion valves sized to match shall be installed on each evaporator.~~

18) Each system shall be properly connected with Ansul 1-8 replaceable cartridge driers, Allin 115 liquid indicators, reverse traps in center of vertical runs, heat exchanger and oil separator.

19) ~~Plumber shall install walk-in evaporator drain line with minimum 4" drop per foot, size 7/8" ACR with union at drain pan. Drain line should exit box ... trapped. Plumber will complete~~ NOT APPLICABLE ~~drain. Refrigeration Contractor will furnish and install a drain line heater for each freezer, heated lines to be insulated with 3/4" Armaflex. Electrical connection for heater to a wall receptacle supplied by Electrician.~~

20) All refrigerated compartments shall operate at 38° F. or as indicated. Freezers shall operate at 0°F. All units shall be self-defrosting.

21) Maintenance instruction, piping, and wiring diagrams and system shut-down procedure notice shall be sealed in plastic film and posted in easily read location in compressor area and on individual on-off switches located in power panel.

22) Instructions and diagrams: Provide any required instructions to the Plumbing and Electrical Contractors for hook-up of machines or other items.

23) Provide to the owner an as-built diagram of the piping systems for use by future servicemen. Provide all required instruction for operation and maintenance of machines and other items of equipment.

24) Normal practices, such as Halide leak detection of all functions, purging high side of non-condensable gases after start-up and necessary adjustments of expansion valves shall be pursued.

25) The complete refrigeration installation to be serviced free of all charges for a period of 90 days from the date the installation is put into operation and all materials found to be defective or inoperative one year from this date shall be replaced by the installer without charge for said material to the purchaser. The refrigeration motor compressors shall be warranted by the manufacturer for a period of 5 years from the purchase date for replacement by the manufacturer at a pro-rated charge to the purchaser for the specific unit.

GENERAL CONTRACTOR REFRIGERATION NOTES

1) Provide ~~a level platform or~~ 4x4 redwood sleepers for outdoor refrigeration condensers on roof ~~or concrete pad on level ground.~~ Verify size and lengths with Equipment Supplier and Refrigeration Contractor.

2) Provide chases for refrigeration lines (through roof, walls or ceiling). Provide a galvanized roof jack (verify size) in roof near refrigeration condensers.

3) General Contractor shall assist Refrigeration Contractor in setting condensers on roof ~~or pad.~~ General Contractor and/or building architect shall be responsible for determining unit weight and if roof members can properly support weight.

4) Provide opening near refrigeration rack through outside wall or roof jack for Refrigeration Contractor to route refrigeration lines and provide weather sealing upon completion.

5) Supply stainless steel chases to cover exposed refrigerant lines, as required, in kitchen or food preparation areas.

6) ~~Surface where walk-ins are to be installed must be flat and~~ NOT APPLICABLE ~~n 1/32" per 4 feet, 1/8" overall.~~

PLUMBING CONTRACTOR REFRIGERATION NOTES

1) Supply 3" PVC runs with long radius 90 degrees, no turns, if underground refrigerant runs are used (verify with refrigeration contractor) to act as chases for installing refrigeration lines.

2) Provide all drains from fixtures, ~~including walk-in box evaporators~~, unless otherwise noted.

3) All fixture drains to be supported by the fixture and not resting on the floor (e.g. dipping cabinets, ice machine, undercounter refrigerators).

4) Ice machine and ice pan drain lines to be properly insulated to prevent sweating. Install union in ice machine drain to allow moving machine for future servicing.

ELECTRICAL CONTRACTOR REFRIGERATION NOTES:

1) Do all wiring and connections, including conduit, outlets and boxes, in accordance with code requirements. Connect all condensers and provide disconnects, magnetic starters and thermo overload protection where required.

2) Verify voltage, phase and amperage requirements with Owner and/or Equipment Supplier.

3) If voltage is other than 208 volts, use the following multipliers to get amperage load for defrost heater: 220v use 1.06; 230v use 1.1; 240v use 1.15.

4) No aluminum wire to be used for any refrigeration load.

5) Walk-in door, drain and door jamb heaters are continuously operated and are to be wired per manufacturers specifications.

6) ~~Do not tur~~ NOT APPLICABLE ~~until refrigeration is supplied~~

7) ~~Lights must~~ NOT APPLICABLE ~~ult from fans.~~

8) All conduit, wiring, outlets, control panels, control wiring, etc. (other than those furnished by Owner or Refrigeration Contractor) are to be furnished and installed by Electrical Contractor.

9) Electrical Contractor to connect all equipment furnished by Equipment Supplier, Refrigeration Contractor or Owner.

10) Evaporator coil in walk-in freezers and remote ice machines shall be wired direct to refrigeration condenser per wiring diagrams supplied by manufacturer. Electrician to provide four (4) wire, color coded service from freezer condenser to coil unit for automatic defrost cycle.

11) Solenoid valves, defrost termination controls, etc., to be furnished by manufacturer, installed by Refrigeration Contractor and wired by Electrical Contractor.

12) Thermostats furnished by manufacturer, installed by Refrigeration Contractor and wired by Electrical Contractor.

13) ~~Make a~~ NOT APPLICABLE ~~penetrations of walk-in~~ ~~erly.~~

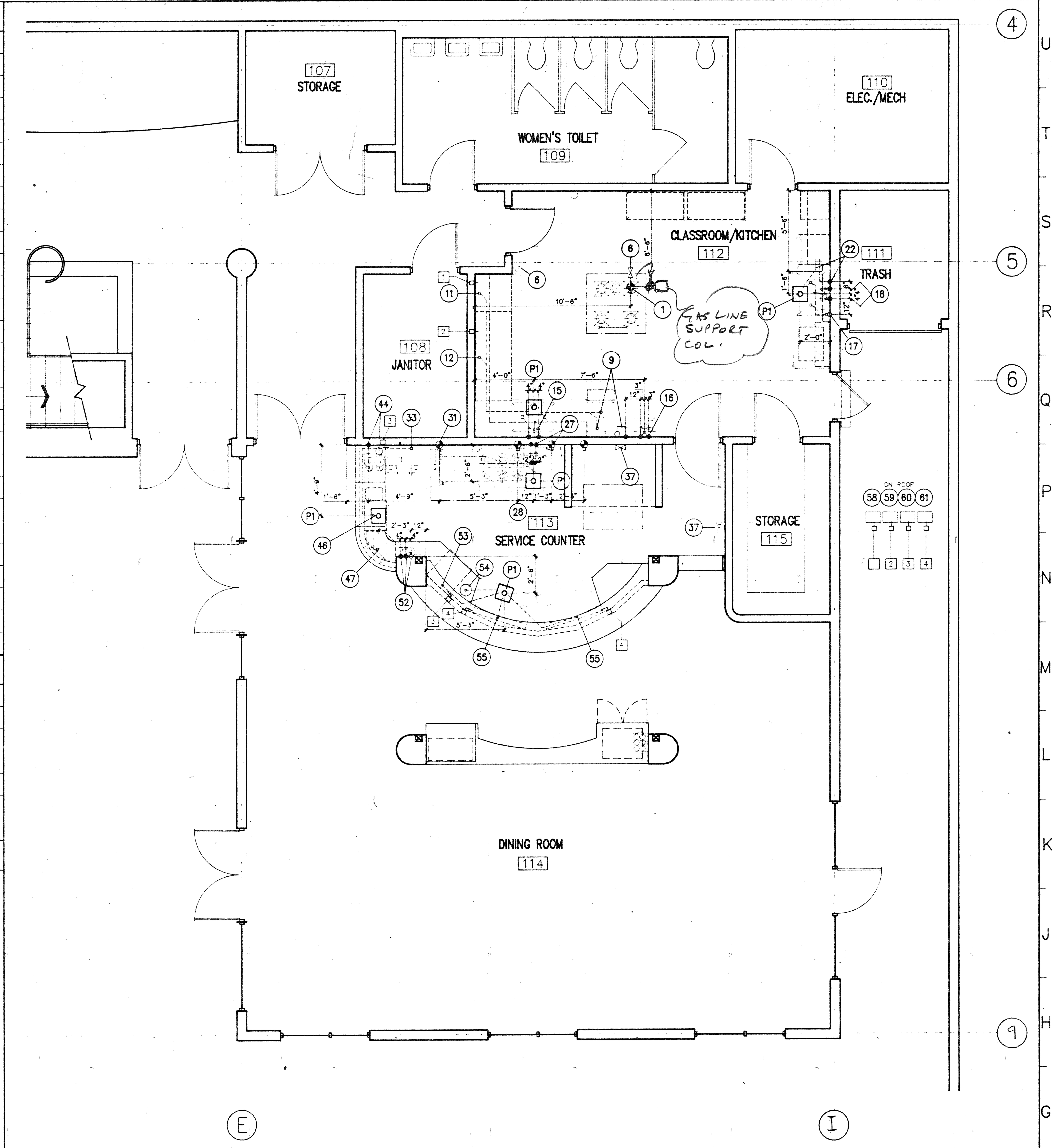

PLUMBING PLAN

¼"=1'-0"

1 / FS3

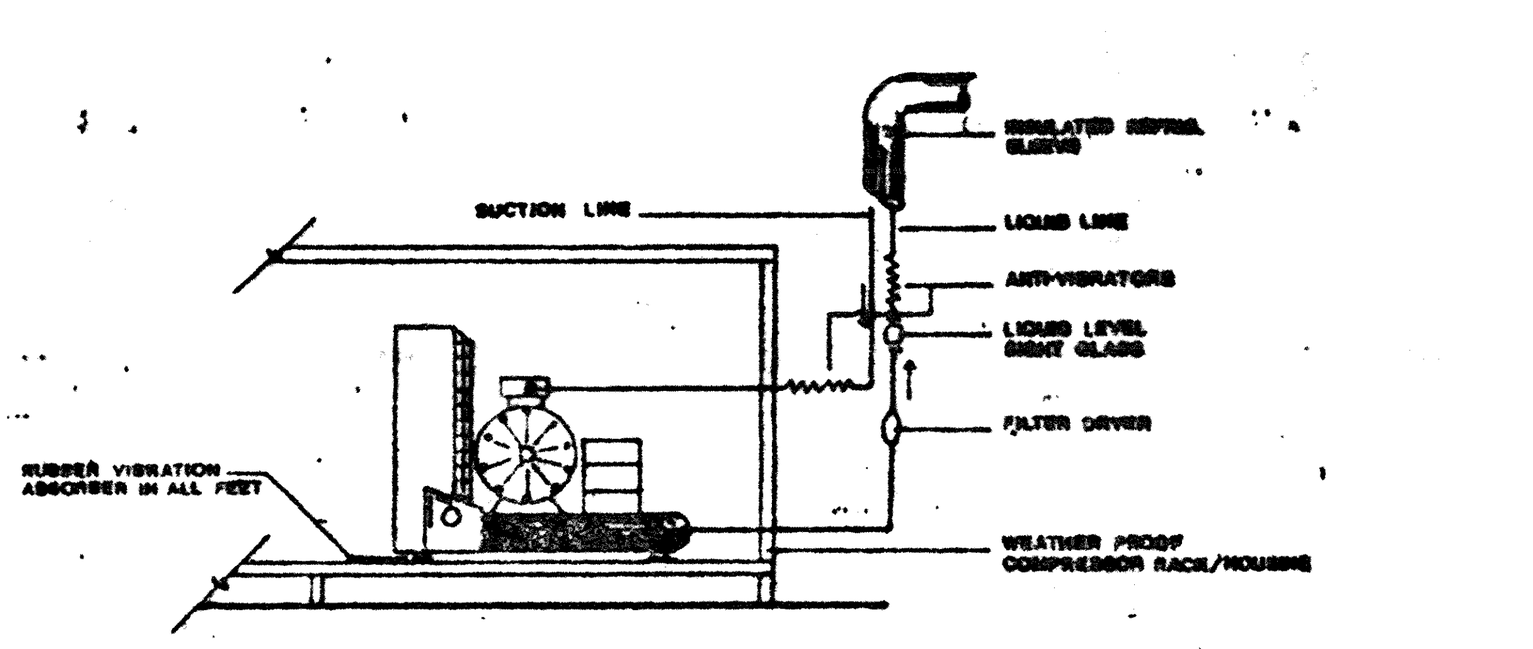

REMOTE COMPRESSOR UNIT

HAF

OCT 1 97

REVISION	DATE	DESCRIPTION	INITIAL

	DATE:
ISSUE FOR PROGRESS REVIEW	
ISSUE FOR PLAN CHECK	ORS.10/9/95
ISSUE FOR PERMIT	
ISSUE FOR BID	4/4/96
ISSUE FOR CONSTRUCTION	

SEAL: 10/31/97

CONSULTANT:

East Bay RESTAURANT SUPPLY, INC. Since 1934
49 FOURTH STREET OAKLAND, CA. 94607
Voice: (510) 465-4300 Fax: (510) 465-3521
Design and Supply for Hotels, Restaurants and Institutions

INTERACTIVE RESOURCES
ARCHITECTURE • PLANNING • ENGINEERING
117 PARK PLACE
POINT RICHMOND
CALIFORNIA 94801
(510) 236-7435
(FAX.) 232-5325

PROJECT:

STUDENT UNION

Diablo Valley College
321 Golf Club Road
Pleasant Hill, CA. 94523

Contra Costa
Community College District

STAMP: LS GR 4-17-96

APPL. NUMBER:

KEY PLAN:

SHEET TITLE:

FOODSERVICE PLUMBING PLAN SCHEDULE & NOTES

SCALE	1/4"=1'-0"	
PROJ. NO.	A94087.04 (EBR. 4295)	
PREPARATION AND REVIEW		
PURPOSE	PERSONAL/INITIAL	DATE
DRAWN BY	Kenneth Tom	09/15/95
PROJ. MGR.	GYN	
PEER REVIEW	XXX	XX/XX/XX

SHEET NUMBER:

FS3

NUMBER: OF:

PLOT DATE: 09-14-1995

51

ELECTRICAL NOTES

For refrence see Architectural/Engineering specs.

1. Furnish and install, including labor, supervision, materials, tools, services, transportation, overhead costs, fees, plan check fees, inspection charges, royalties, etc.; a complete electrical installation as specified herein and indicated on all electrical and other drawings, e.g. control wiring for mechanical system, in an approved, neat, first class, finished, safe, workmanship like manner that complies with all applicable local, state, federal and serving electrical and telephone utilities, etc. codes, ordinances, rules, regulations, standards, etc. including current addenda and errata. the entire electrical installation shall comply or surpass the most recent edition of the national electrical code per Occupational Safety and Health Administration (OSHA). All equipment shall meet U.L. approval. All work meets 1990 NEC.
2. ~~Refer to all sheets and specifications prior to any bidding. Any discrepancies in drawings~~ or job site conditions shall be noted and indicated on bid submittal.
3. Although the drawings have endeavored to show all utilities at the project site, all utility locations are not necessary known or show. Electrician shall determine electrical service to existing retail space. Also without limitation, the Electrician shall be responsible at his own cost for all work expenses or special precautions caused by the existence or proximity of utilities encountered at site (may include communications cables or high voltage cables). When core drilling, cutting, etc. in the vicinity of the cables, special precautions shall be observed by the Electrician to guard against any damage or injury.
4. Electrician shall maintain electrical service (even temporary wiring and power) to building space. If necessary to cut off power, proper and timely notice shall be given to owner and Sub-Contractors. Duration of power cut off shall be kept to a minimum.
5. Electrician shall complete any demolition work as required for new work, such as removing existing drywall, plaster, studs and relocating existing utilities as required.
6. Electrical Engineer shall determine the new electrical service load required for restaurant equipment, lighting, etc. If necessary, increase size of service as required. Review power supply with local electric power agent as soon as possible in order to meet his work schedule. Electrical Engineer to size and Electrician to install power panels and main switchboard/gear
7. Electrician to label all panels and circuit breakers in panels for ease of identification.
8. All wiring must be in rigid conduit or EMT (Electric Metallic Conduit) or flex metal conduit (pigtails to units on direct connections), or seal-tight flex conduit. All conduits shall be installed inside walls or cabinets and concealed wherever possible.
9. Electrician to connect and provide power to all fixtures supplied by Electrician, Equipment Contractor, Decor Contractor, or Owner. If not possible overhead or in wall, Equipment Contractor shall drill through floor and run underground for feeds to items or general area feeds.
10. Electrical Engineer to size all electrical circuit breakers, wire diameters, conduits, junction boxes, etc. for load requirements Electrician to provide all junction boxes and outlets in walls. Install flush with finished wall or splash unless otherwise noted. External wiring for fixtures to be connected by Electrician. no exposed lines. Where necessary, install extension rings on outlets through cabinet or equipment back splashes.
11. Electrician shall be responsible for verifying the electrical characteristics and additional requirements of all the electrical food service equipment, including outlets, plugs and any external wiring (flexible conduit direct connections from junction boxes to unit). Equipment cut sheets shall be provided. Verify and coordinate with Food Service Equipment Supplier and comply as required.
12. Electrician shall verify and coordinate with Mechanical Contractor on the location of mechanical equipment such as hood supply and exhaust fans (e.g. voltage, phase, horse power, amperage, control wiring, number of connections, etc. and comply as required).
13. All horizontal dimensions are taken from face of stud (FOS) or face of wall (FOW) to centerline of outlet, unless otherwise noted.
14. All outlets noted up 12", etc. to be placed in wall at height given (height is measured from finished floor not from concrete slab, wood sub-floor or top of equipment base) to centerline of outlet.
15. Install outlets where dimensioned. if necessary, install blocking or framing brackets between studs.
16. Any outdoor electrical outlets, switches or connections shall be weatherproof. Provide a utility outlet on roof near mechanical or refrigeration equipment. UMC 509.
17. Electrician to connect all compressor and fan motor with disconnect, magnetic starter or control switches. Provide over-current protection for motors not furnished with integral item. Provide contractors for electrical cooking equipment which must shut down when fire suppression system is activated.
18. Lighting, power, telephone and communication outlets shall not be placed back to back in common walls.
19. ~~No more than three (3) utility outlets shall be on one circuit~~.
20. Provide plugs and cords for movable equipment where they are not standard with manufacturer. Shorten cords if requested by Equipment Supplier or Owner.
21. ~~All isolated clean circuit (item #, 48), use red color outlets as indication of special use (special outlets for cash register, computer, printers or other special use)~~.
22. Electrician and General Contractor to coordinate floor, wall and ceiling penetrations with other trades and work to avoid conflicting rough-in installations. Review with Project Coordinator.
23. ~~Electrician to provide and run conduit chase for telephone as indicated. Install juntion boxes with cover plates and pull cord for telephone installer. Run back to building telephone terminal board~~.
24. All conduit penetrations through fire rated floors, walls or ceilings shall be sealed to maintain the fire separation. Electrician shall verify and receive approval from landlord and/or building Architect/Engineer prior to any slab core drilling on penetrating structural members (e.g. post tension slab with cables) If necessary, Electrician shall be responsible for X-raying slab to determine concealed members.
25. ~~Install a polyethylene pull rope in all empty conduits~~.
26. ~~In all kitchen food preparation, dishwashing and serving areas, provide stainless steel outlet cover plates. In other areas, provide standard white, ivory or brown cover plates as directed, or match adjacent finish color~~.
27. ~~All lighting circuits to be the responsibility of the Electrician. If any discrepancies with switching layout, verify with Architect. Switching shall meet Title 24 energy requirements.~~
28. ~~All lighting fixtures shall contain new lamps of power, type and size shall be furnished by Electrician unless otherwise noted~~.
29. Furnish two spare lamps for each type of light fixture used.
30. Electrician shall verify all fixture locations prior to installing or cutting holes in ceiling.
31. All light switches at +48", unless otherwise noted (handicap height at +48").
32. If any exposed incandescent lamps and/or fluorescent tubes are installed, they shall be provided with safety Toob-gard unbreakable plastic sleeves or plastic lens when over food display or preparation areas.
33. Electrician shall provide emergency power system, lights and exit signs as required by Building Department codes on lighting (1.5 hour endurance batteries with unit on separate circuit or wired ahead of main disconnect). Verify, see Engineering drawings.
34. ~~If required by Building Department, the Electrical Engineer, under his contract, shall provide drawings or diagrams of wires, breaker arrangement, etc~~.
35. Electrician shall review operation of equipment circuit breakers, etc. with Owner and/or his representative at completion of the project.
36. At exterior refrigeration compressor rack, Electrician may provide a sub-panel for disconnect switches for condenser units (units are individual wall mounted disconnect switches.
37. All outlets within 6'-0 of water source shall be GFI (Ground Fault Interrupter) type for electric shock protection.

ELECTRICAL SCHEDULE

△	ITEM NO.	DESCRIPTION	QTY.	MFR.	MODEL NO.	VOLT.	PH	LOAD KW	LOAD AMPS	LOAD HP	HT.	REMARKS
	3	HOOD LIGHT	2	HOOD MFG	VAPOR PROOF	120	1	0.1			108"	J BOX IN HOOD, PROVIDE SEALTIGHT FLEX CONDUIT TO FIXTURES. WIRE TO SWITCH CONTROL.
	4	EXHAUST FAN FOR HOOD #3	1	SEE MECH DWGS	–	208	3	–	–	–	ON ROOF	PROVIDE J BOX ON ROOF W/ SEALTIGHT FLEX CONDUIT TO UNIT CONNECTION. INTERWIRE W/ #5. WIRE TO SWITCH CONTROL. W/ DISCONN. SW.
	5	MAKE-UP AIR FAN FOR HOOD #3	1	SEE MECH DWGS	–	208	3	–	–	–	ON ROOF	PROVIDE J BOX ON ROOF W/ SEALTIGHT FLEX CONDUIT TO UNIT CONNECTION. INTERWIRE W/ #4 W/ DISCONN. SW.
	9	ICE MAKER	1	MANITOWOC	320	120	1	7.3	11.2		66"	J BOX IN WALL, PROVIDE SEALTIGHT FLEX CONDUIT TO UNIT CONNECTION
	11	UNDERCOUNTER FREEZER	1	DELFIELD	V18930-F-28	120	1		2.0		18"	J BOX IN WALL, PROVIDE SEALTIGHT FLEX CONDUIT TO UNIT CONNECTION
	12	UNDERCOUNTER REFRIG.	1	DELFIELD	V18372-28	120	1		4.0		18"	J BOX IN WALL, PROVIDE SEALTIGHT FLEX CONDUIT TO UNIT CONNECTION. SEE #59
	22	LOW TEMP DISHWASHER	1	HOBART	LX 18C	208	1		7.6	¾	24"	J BOX IN WALL, PROVIDE SEALTIGHT FLEX CONDUIT TO UNIT CONNECTION.
	24	PIZZA OVEN	1	BAKERS PRIDE	FC 516	120	1		15		18"	PROVIDE OUTLET IN WALL. UNIT W/ CORD/PLUG
	29	AIR CURTAIN FAN	1	MARS	36 CH	120	1			½	VFY	J BOX IN WALL ABOVE DOOR, WIRE TO SW CONTROL ON DOOR.
	32	ROTARY SPIT	1	BAKERSS PRIDE	HD-2	120	1			1/15	48"	OUTLET IN WALL, UNIT PROVIDED CORD/PLUG.
	33	REFRIGIRATOR	1	DELFIELD	V18342-28	120	1		2.0		18"	J BOX IN WALL, PROVIDE SEALTIGHT FLEX CONDUIT TO UNIT CONNECTION
	35	EXHAUST FAN FOR HOOD #34, #39	1	SEE MECH DWGS	–	208	3	–	–	–	ON ROOF	PROVIDE J BOX ON ROOF W/ SEALTIGHT FLEX CONDUIT TO UNIT CONNECTION. WIRE TO SWITCH CONTROL. INTERWIRE W/ #36 W/ DISCONN. SW.
	36	MAKE-UP AIR FAN FOR HOOD #34, #39	1	SEE MECH DWGS	–	208	3				ON ROOF	PROVIDE J BOX ON ROOF W/ SEALTIGHT FLEX CONDUIT TO UNIT CONNECTION. INTERWIRE W/ #35. W/ DISCONN. SW.
	39	HOOD LIGHT	2	HOOD MFG	VAPOR PROOF	120	1	0.1			108"	J BOX IN HOOD, PROVIDE SEALTIGHT FLEX CONDUIT TO FIXTURES. WIRE TO SWITCH CONTROL.
	43	ESPRESSO GRINDER	2	–	–	120	1	–	9.0		48"	OUTLET IN WALL. UNIT PROVIDED CORD/PLUG.
	44	ESPRESSO MACHINE	1	BUCKMAN	CEE-86-2	208	1	2.6	14		18"	J BOX IN WALL PROVIDE SEALTIGHT FLEX CONDUIT TO PUMP/MOTOR.
	48	CASH REGISTER	1	BY OWNER	–	120	1		15		36"	OUTLET IN CABINET. PROVIDE SEPARATE CIRCUIT GROUND. UNIT PROVIDED CORD/PLUG
	53	UNDERCOUNTER REFRIG.	1	DELFIELD	V18324-28	120	1		2.0		18"	J BOX IN DIE WALL, PROVIDE SEALTIGHT FLEX CONDUIT TO UNIT CONNECTION. SEE #60
	54	SOUP WARMER	1	WELLS	SS-8D	208	1	0.36	1.7		24"	J BOX IN DIE WALL. PROVIDE SEALTIGHT FLEX CONDUIT TO UNIT CONNECTION. WIRE TO UNIT SWITCH CONTROL. INSTALL SWITCH CONTROL
	55	REFRIG. SANDWICH TABLE	2	DELFIELD	V18148-28 V18248-28	120	1		2.0		18"	J BOX IN DIE WALL. PROVIDE SEALTIGHT FLEX CONDUIT TO UNIT CONNECTION. SEE #61
	58	REMOTE REFRIG. COND. FOR #11	1	COPELAND	FTA-A034-IAA	120	1			1/3	ON ROOF	J BOX IN WALL. PROVIDE SEALTIGHT FLEX CONDUIT TO UNIT CONNECTION. W/ DISCONN. SW.
	59	REMOTE REFRIG. COND. FOR #12	1	COPELAND	MSYH-0033-IAA	120	1			1/3	ON ROOF	J BOX IN WALL. PROVIDE SEALTIGHT FLEX CONDUIT TO UNIT CONNECTION. W/ DISCONN. SW.
	60	REMOTE REFRIG. COND. FOR #33 & #53		COPELAND	F3AM-A051-IFA	120	1			½	ON ROOF	J BOX IN WALL. PROVIDE SEALTIGHT FLEX CONDUIT TO UNIT CONNECTION. W/ DISCONN. SW.
	61	REMOTE REFRIG. COND. FOR #55	1	COPELAND	F3AMA051-IFA	120	1			½	ON ROOF	J BOX IN WALL. PROVIDE SEALTIGHT FLEX CONDUIT TO UNIT CONNECTION. W/ DISCONN. SW.
	E1	CONV. OUTLET	7	BY ELEC. CONT.	–	120	1		5.0		SEE PLAN	PROVIDE OUTLET HORIZ. IN WALL, SPLASH OR CABINET

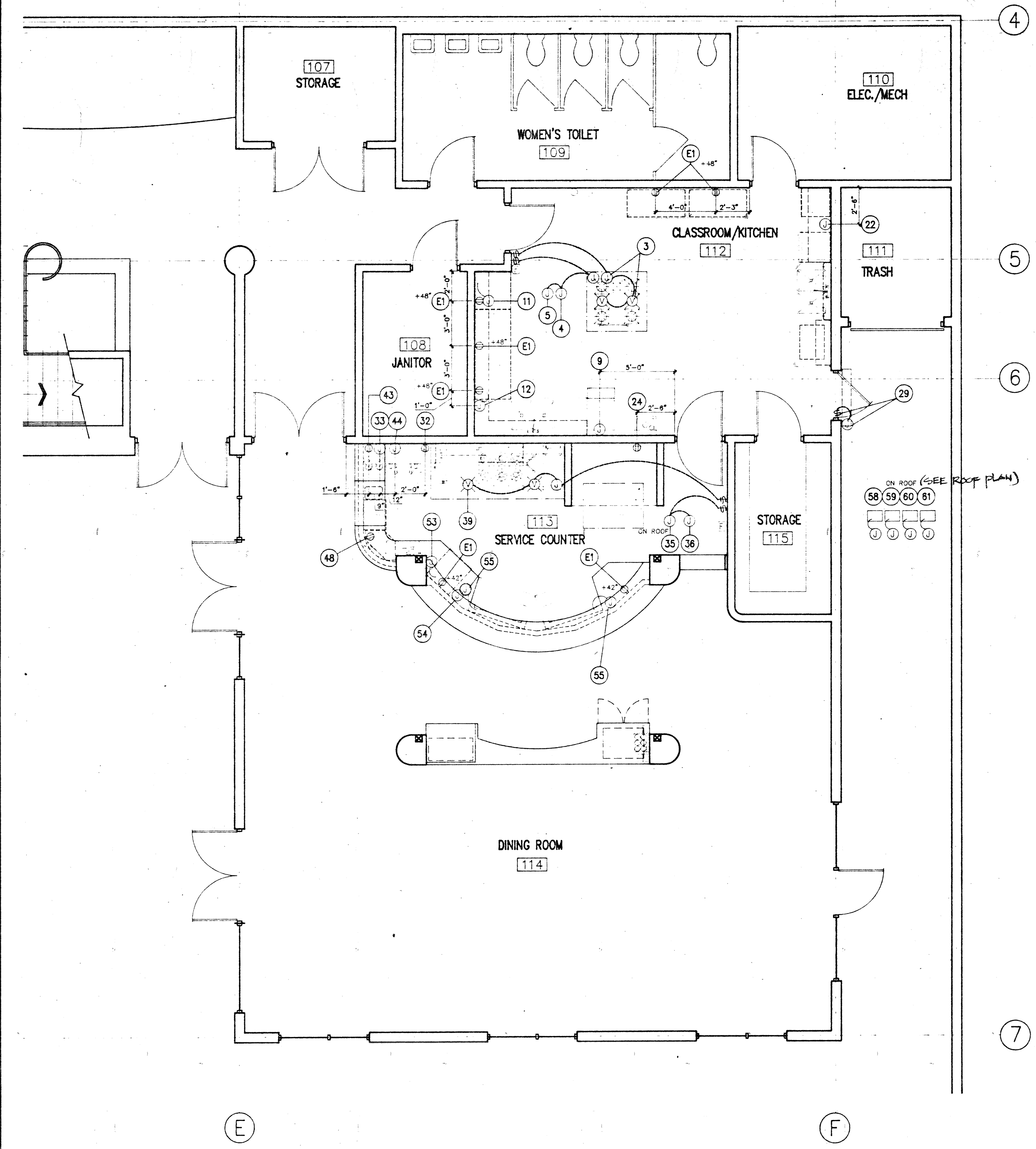

ELECTRICAL PLAN

1/4"=1'-0"

1 FS4

ELECTRICAL SYMBOLS

- DUPLEX CONVENIENCE OUTLET, 115V/1ø UNLESS OTHERWISE NOTED
- WEATHERPROOF DUPLEX CONVENIENCE OUTLET, 115V/1ø UNLESS OTHERWISE NOTED
- SPECICIAL CONVENIENCE OUTLET, 208V. 1ø OR 208V. 3ø
- FLOOR OUTLET
- JUNTION BOX
- TELEPHONE
- METER
- POWER PANEL
- SINGLE POLE SWITCH
- DIMMER SWITCH
- THREE WAY SWITCH
- FLUORESCENT LIGHT FIXTURE
- INCANDESCENT LIGHT FIXTURE
- VAPOR PROOF LIGHT FIXTURE
- DOWN LIGHT FIXTURE
- WALL WASHER LIGHT FIXTURE
- EXIT SIGN/LIGHT FIXTURE
- EMERGENCY LIGHTING FIXTURE
- CEILING EXHAUST FAN
- SUPPLY DIFFUSER
- RETURN OR EXHAUST DIFFUSER

AS BUILT
CORRECTIONS BY HAF
CONTRACT NO.
DATE Oct 1 97

REVISION	DATE	DESCRIPTION	INITIAL

	DATE:
ISSUE FOR PROGRESS REVIEW	
ISSUE FOR PLAN CHECK	ORS 10/9/95
ISSUE FOR PERMIT	
ISSUE FOR BID	4/4/96
ISSUE FOR CONSTRUCTION	

SEAL: 10/31/94

CONSULTANT:

East Bay RESTAURANT SUPPLY, INC. Since 1934
49 FOURTH STREET OAKLAND, CA. 94607
Voice: (510) 465-4300 Fax: (510) 465-3521
Design and Supply for Hotels, Restaurants and Institutions

INTERACTIVE RESOURCES
ARCHITECTURE • PLANNING • ENGINEERING
117 PARK PLACE
POINT RICHMOND
CALIFORNIA 94801
(510) 236-7435
(FAX.) 232-5325

PROJECT:

STUDENT UNION

Diablo Valley College
321 Golf Club Road
Pleasant Hill, CA. 94523

Contra Costa
Community College District

STAMP:

L> GR 4-17-96

APPL. NUMBER:

KEY PLAN:

SHEET TITLE:

FOODSERVICE ELECTRICAL PLAN SCHEDULE & NOTES

SCALE	1/4"=1'-0"	
PROJ. NO.	A94087.04 (EBR. 4295)	
PREPARATION AND REVIEW		
PURPOSE	PERSONAL/INITIAL	DATE
DRAWN BY	Kenneth Tom	09/15/95
PROJ. MGR.	GYN	
PEER REVIEW	XXX	XX/XX/XX

SHEET NUMBER:

FS4

NUMBER: OF:

PLOT DATE: 09-15-1995

52

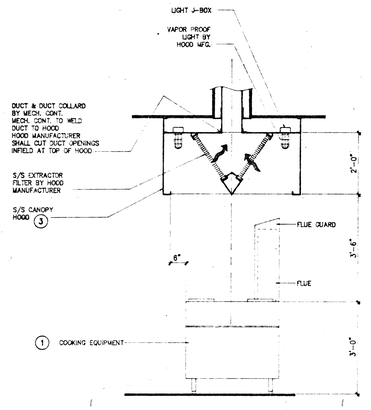

4 FS5 EXHAUST HOOD DETAIL (3)

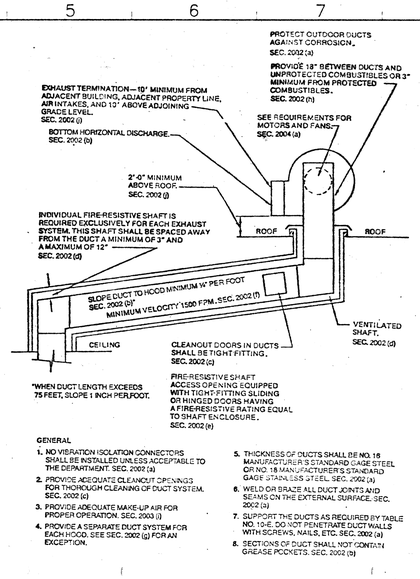

GENERAL

1. NO VIBRATION ISOLATION CONNECTORS SHALL BE INSTALLED UNLESS ACCEPTABLE TO THE DEPARTMENT. SEC. 2002 (a)
2. PROVIDE ADEQUATE CLEANOUT OPENINGS FOR THOROUGH CLEANING OF DUCT SYSTEM. SEC. 2002 (c)
3. PROVIDE ADEQUATE MAKE-UP AIR FOR PROPER OPERATION. SEC. 2003 (i)
4. PROVIDE A SEPARATE DUCT SYSTEM FOR EACH HOOD. SEE SEC. 2002 (g) FOR AN EXCEPTION.
5. THICKNESS OF DUCTS SHALL BE NO. 16 MANUFACTURER'S STANDARD GAGE STEEL OR NO. 18 MANUFACTURER'S STANDARD GAGE STAINLESS STEEL. SEC. 2002 (k)
6. WELD OR BRAZE ALL DUCT JOINTS AND SEAMS ON THE EXTERNAL SURFACE. SEC. 2002 (a)
7. SUPPORT THE DUCTS AS REQUIRED BY TABLE NO. 10-E. DO NOT PENETRATE DUCT WALLS WITH SCREWS, NAILS, ETC. SEC. 2002 (a)
8. SECTIONS OF DUCT SHALL NOT CONTAIN GREASE POCKETS. SEC. 2002 (b)

3 FS5 EXHAUST SHAFT/DUCT REFERENCE SPECIFICATION

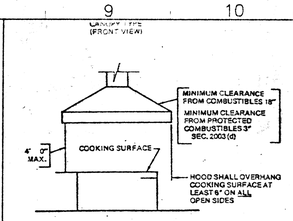

FOR REFERENCE, GENERAL INFORMATION:

GENERAL – FOR ALL HOODS

1. IF GUTTERS ARE PROVIDED THEY SHALL DRAIN TO AN ACCESSIBLE RECEPTACLE.
2. SEE TABLE NO. 20-A FOR MINIMUM DISTANCE BETWEEN LOWER EDGE OF GREASE FILTER AND THE COOKING OR HEATING SURFACE.
3. GREASE FILTERS SHALL BE INSTALLED IN FRAMES OR HOLDERS WITH HANDLES AND BE HEADILY REMOVABLE FOR CLEANING.
4. ALL JOINTS AND SEAMS SHALL BE GREASE TIGHT – USE SOLDER ONLY FOR SEALING JOINTS AND SEAMS.
5. HOODS SHALL BE SECURELY FASTENED IN PLACE BY NONCOMBUSTIBLE SUPPORTS.
6. TYPE I HOODS ALSO REQUIRE APPROVED FIRE-EXTINGUISHING SYSTEMS FOR DUCTS, GREASE REMOVAL DEVICES, HOODS AND COOKING EQUIPMENT.
7. HOOD MANUFACTURER TO VERIFY SIZE & SHAPE COOKING EQUIPMENT & ARRANGEMENT IN HOOD. VERIFY OVERALL SIZE & MAINTAIN 2" OVERHANG.
8. ALL CONSTRUCTION SHALL BE IN COMPLIANCE W/ NFPA 96 // CONSTRUCTION STAINLESS STEEL TYPE 302-304 #4 FINISH. 18GA MIN. CONTINUOUSLY WELDED.
9. FURNISH GREASE FILTER HOUSING ALONG FULL LENGTH OF CANOPY AT BACK. FURNISH S/S UL LISTED FILTERS, INSTALLED ON NOT LESS 45° ANGLE FULL LENGTH. FILTERS TERMINATE AT BOTTOM PITCHED DRIP TRAY.
10. HOOD MANUFACTURER SHALL INSTALL HOOD, MECH & SUPPLIED FANS, DUCTS, CURBS, ETC. TO PROVIDE ALL POWER, DISCONNECT SW., CONTROLS ETC. AS TO PROVIDE DRY WELL SHAFT.

2 FS5 HOOD SPECIFICATION

WET CHEMICAL R-102.

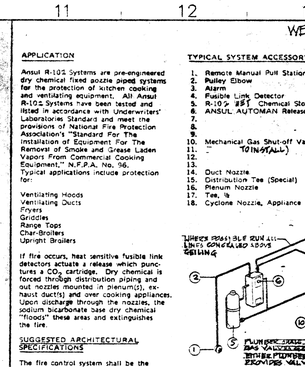

TYPICAL SYSTEM ACCESSORY OPTIONS

1. Remote Manual Pull Station
2. Pulley Elbow
3. Alarm
4. Fusible Link Detector
5. R-102 SST Chemical Storage Chamber
6. ANSUL AUTOMAN Release
7. –
8. –
9. –
10. Mechanical Gas Shut-off Valve (NUMBER TO INSTALL)
11. –
12. –
13. –
14. Duct Nozzle
15. Distribution Tee (Special)
16. Plenum Nozzle
17. Tee, 1/2
18. Cyclone Nozzle, Appliance

APPLICATION

Ansul R-102 Systems are pre-engineered dry chemical fixed nozzle piped systems for the protection of kitchen cooking and ventilating equipment. All Ansul R-102 Systems have been tested and listed in accordance with Underwriters' Laboratories Standard and meet the provisions of National Fire Protection Association's "Standard For The Installation of Equipment For The Removal of Smoke and Grease Laden Vapors From Commercial Cooking Equipment," N.F.P.A. No. 96. Typical applications include protection for:

Ventilating Hoods
Ventilating Ducts
Fryers
Griddles
Range Tops
Char-Broilers
Upright Broilers

If fire occurs, heat sensitive fusible link detectors actuate a release which punctures a CO_2 cartridge. Dry chemical is forced through distribution piping and out nozzles mounted in plenum(s), exhaust duct(s) and overlooking appliances. Upon discharge through the nozzles, the sodium bicarbonate base dry chemical "floods" these areas and extinguishes the fire.

SUGGESTED ARCHITECTURAL SPECIFICATIONS

The fire control system shall be the dry chemical pre-engineered, piped, fixed nozzle type manufactured by The Ansul Company. It shall be specifically UL listed for the hazard and installed in accordance with National Fire Protection Association Standard No. 96 (latest revision), "Standard For The Installation of Equipment For The Removal of Smoke and Grease Laden Vapors From Commercial Cooking Equipment" and conform to all local and/or state codes and standards.

The design of the system shall provide for protection of duct systems, grease removal devices and hoods. Cooking equipment such as fat fryers, ranges, griddles and broilers, which may be a source of ignition of grease in the hood or duct shall also be protected. All sources of fuel and heat to the cooking equipment shall be automatically shut off upon operation of the system.

The system shall be capable of automatic (connected to a suitably listed system of detection and actuation) and manual mechanical operation.

NOTE

INSTALLING CONTRACTOR SHALL SUBMIT PLAN LAY-OUT OF NOZZLES TO FIRE DEPT. FOR REVIEW/APPROVAL & OBTAIN PERMIT PRIOR TO INSTALLATION. FIE SHALL PERFORM PRE'D FIELD TEST OF EQUIP/INSTALLATION FOR FIRE INSPECTOR.

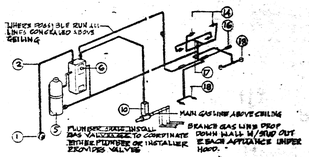

TYPICAL DETAIL - NOT TO SCALE

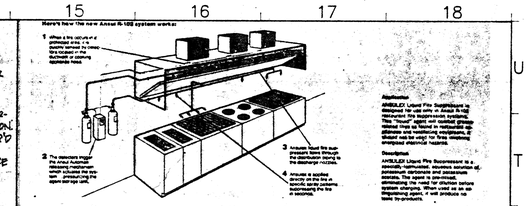

Here's how the new Ansul R-102 system works:

1. When a fire occurs at a protected cooking surface, it is detected by the fusible link located in the ventilation duct above the cooking equipment.
2. The detection head releases the pressurized gas which actuates the system – pressurizing the agent storage tank.
3. Actuation opens the gas valve releasing gas to the mechanical actuators on the discharge manifold.
4. Actuation of the mechanical actuators opens the valves on the agent storage tank.

Total System

The mechanisms the suppression system shall be the pressurized type using a nitrogen expellant type with a fixed fill pressure. The system shall consist of a tank assembly, valve assembly, actuation lines, and distribution piping and nozzles.

The system shall be capable of automatic detection and actuation with listed detection equipment. The system shall also be capable of manual actuation by means of manual gas line shutoff assemblies.

The systems shall have the responsibilities for the following mechanisms and features: tank assembly, valve assembly, actuation lines, distribution piping and nozzles, agent quantities, pressurization, and number of cylinders. The number of chain-type cooking stations, care more, or gas nature applications.

A system owner's manual shall be provided with each system installed. Instructions for system operation in case of emergency, and a maintenance record sheet shall be installed on the system cylinder. Instructions for recharging, resetting, or maintenance shall be supplied on the manufacturer shall provide services through a network of authorized distributors.

Suppression Equipment

Regulated Release Mechanisms – The regulated release mechanisms shall be of the spring-loaded, mechanical-pneumatic actuation type. The mechanisms shall be capable to hold or test agent tanks, depending on the capacity of the mechanisms. Each mechanism shall have a manual actuation handle and a tamper-resistant pull pin. The mechanisms shall have a visual indicator of the content of the mechanisms, whether charged or discharged.

The regulated release mechanisms shall have the following actuation capabilities: manual actuation by means of a pull handle, pneumatic actuation by a mechanical pull station, fixed mechanical actuation by a fusible link, and actuation of the remote mechanisms and the like.

The regulated release mechanisms shall be capable of actuating the following equipment: gas lines, and one 3 gallon agent tank located in a chrome-plated, stainless steel tank. The mechanisms shall contain knock-outs for 1/2 in. conduit. The mechanisms shall be approved for Pull pull station and manual release.

The regulated release mechanism shall be compatible with mechanical gas line shut-off devices, or other approved valves. The mechanisms shall be compatible and tested, or shall be compatible with the gas line or appliance shut-off valves.

Agent – The extinguishing agent shall be a pressurized composition, potassium bicarbonate formulation designed for use in dry chemical extinguishing systems. The agent shall be compatible with the mechanisms and tested by means of a 1/4 in. (1.6 mm) diameter stainless steel rods and 16 in. conduit. The pull station shall be located at a distance of not more than 10 ft. (3.05 m) from the hazard. The mounting height of the pull station shall be 42 in. (1.07 m) above the floor.

Pressurized Gas Line Shut-Off Valve – A UL listed, mechanical valve shall be provided which automatically gas flow to the cooking equipment in the event of a fire. The valve shall have a 1/2 in. NPT female inlet and outlet and shall be installed with a 1/2 in. NPT female inlet and outlet. The valve shall be installed in the gas line in accordance with the manufacturer's instructions. The valve shall have maximum working pressure of 5 psi (0.35 kg/cm²).

A manual reset handle shall be provided with the valve. The handle shall be used to reset the valve after it has been tripped. The handle shall be secured with tamper resistant seal.

Gas Line Shut-Off Valve – A UL listed, electric gas valve shall be provided which automatically shuts off the gas flow to the appliance in the event of a fire. The gas valve shall incorporate an electrically operated solenoid which shall be energized by electrical power from the detection system. The valve shall be rated for 120 V AC, 60 Hz, 1 amp. The valve shall be installed with the appropriate natural gas or propane orifice. The valve shall be installed in accordance with the manufacturer's instructions. The valve shall have a maximum working pressure of 5 psi (0.35 kg/cm²).

Electric Switch – A UL listed, manually operated switch shall be provided to shut off electrical power to appliances. The switch shall incorporate a red, mushroom-type button. The switch shall be rated for 30 amps at 120 V AC. The switch shall be wired in accordance with the manufacturer's instructions. The switch shall be available in single-pole, double-throw. The switch shall be rated for 10 amps at 125 VAC, 5 amps at 250 VAC, 3 amps at 125 VAC, 1.5 amps at 250 VAC, 1 amp at 125 VDC, and 0.5 amp at 250 VDC. The switch shall be installed with the appropriate rating and shall be installed in accordance with the manufacturer's instructions.

Detection System – The regulated release mechanisms shall be compatible with a fusible link detection system.

The fusible link shall be selected and installed in accordance with the manufacturer's instructions. The fusible link shall be rated as follows:

Fusible Link Temperature	Use Where Ambient Temperature Does Not Exceed
280°F (138°C)	225°F (107°C)
360°F (182°C)	286°F (141°C)
450°F (232°C)	365°F (185°C)
500°F (260°C)	400°F (204°C)
650°F (343°C)	500°F (260°C)

The fusible link shall be connected to a detector bracket/linkage assembly. The detector bracket/linkage shall be 10 in. (254 mm) above the cooking surface.

The detector bracket/linkage assembly shall have provisions for mounting 1/2 in. rigid or EMT (thin-wall) conduit, and 1/2 in. flexible conduit. The detector bracket/linkage assembly shall be compatible with the mechanical actuation system. The detector bracket/linkage assembly shall be compatible with mechanical gas line shut-off devices, or other approved valves. The detector bracket/linkage assembly shall be compatible and tested, or shall be compatible with the gas line or appliance shut-off valves.

Agent – The extinguishing agent shall be a pressurized composition, potassium bicarbonate formulation designed for use in dry chemical extinguishing systems. The agent shall be compatible with the mechanisms and tested by means of a 1/4 in. (1.6 mm) diameter stainless steel rods and 16 in. conduit. The pull station shall be located at a distance of not more than 10 ft. (3.05 m) from the hazard. The mounting height of the pull station shall be 42 in. (1.07 m) above the floor.

Pressurized Gas Line Shut-Off Valve – A UL listed, mechanical valve shall be provided which automatically gas flow to the cooking equipment in the event of a fire. The valve shall have a 1/2 in. NPT female inlet and outlet and shall be installed with a 1/2 in. NPT female inlet and outlet. The valve shall be installed in the gas line in accordance with the manufacturer's instructions. The valve shall have maximum working pressure of 5 psi (0.35 kg/cm²).

A manual reset handle shall be provided with the valve. The handle shall be used to reset the valve after it has been tripped. The handle shall be secured with tamper resistant seal.

Gas Line Shut-Off Valve – A UL listed, electric gas valve shall be provided which automatically shuts off the gas flow to the appliance in the event of a fire. The gas valve shall incorporate an electrically operated solenoid which shall be energized by electrical power from the detection system. The valve shall be rated for 120 V AC, 60 Hz, 1 amp. The valve shall be installed with the appropriate natural gas or propane orifice. The valve shall be installed in accordance with the manufacturer's instructions. The valve shall have a maximum working pressure of 5 psi (0.35 kg/cm²).

Electric Switch – A UL listed, manually operated switch shall be provided to shut off electrical power to appliances. The switch shall incorporate a red, mushroom-type button. The switch shall be rated for 30 amps at 120 V AC. The switch shall be wired in accordance with the manufacturer's instructions. The switch shall be available in single-pole, double-throw. The switch shall be rated for 10 amps at 125 VAC, 5 amps at 250 VAC, 3 amps at 125 VAC, 1.5 amps at 250 VAC, 1 amp at 125 VDC, and 0.5 amp at 250 VDC. The switch shall be installed with the appropriate rating and shall be installed in accordance with the manufacturer's instructions.

Recharge – The system shall be recharged by a professional recharge agent manufacturer's instructions.

Features

- Fast Flame Knock-Down and Secure Heat of Grease/Oil Vapor Fires
- Provides a Cooling Effect Which Further Enhances its Ability to Prevent Reflash
- Designed for a Wide Variety of Commercial Hazards
- Listed by Underwriters Laboratories, Inc. (UL EX4190) and Meets the NFPA 96 Requirements
- Ease of Recharge and Post-Fire Cleanup

Agent

Description

ANSULEX Liquid Fire Suppressant is a potassium carbonate based, low pH, liquid agent specifically designed for wet chemical applications. The "Wet" agent will combat grease fires in a manner that will prevent re-ignition. Ansulex Liquid Fire Suppressant is stored and ready for fires through a standard stainless steel nozzle.

Agent Properties

Appearance	Color-Colorless Pink
Storage Life	10 Years
Specific Gravity	1.4068
Freeze Point	– 24.7°F (– 31.5°C)
Boiling Point	200 °F (93.4 °C)
Heat Capacity	.86 Cal/gm
Surface Tension	70 dynes/cm
Vapor Pressure	15.8 mm Hg
Kinematic Viscosity	1.41
Corrosivity	4.26 centistokes

Warning: As in the case with other potassium salts which are alkaline in solution, care should be taken to avoid prolonged contact with the eyes. Flush eyes with water if the agent is inadvertently splashed into eyes. Rinse hands thoroughly with water if mild irritation persists.

Performance

When used in the Ansul R-102 restaurant system, ANSULEX liquid agent is recommended for the protection of deep fat fryers, griddles, and range tops. The agent is used in a variety of applications including: broilers, upright broilers, char-broilers, and several types of barbecue units.

In this agent is sprayed in fine droplets from specially designed nozzles which are positioned over the hazard. Rapid heat absorption, oxygen displacement, flame-quenching, and fire-securing action are the result. The agent will not support combustion and will not burn. The agent will not react with cooking oils to support combustion. The agent will not react with cooking oils to support combustion. The agent will not react with cooking oils to support combustion

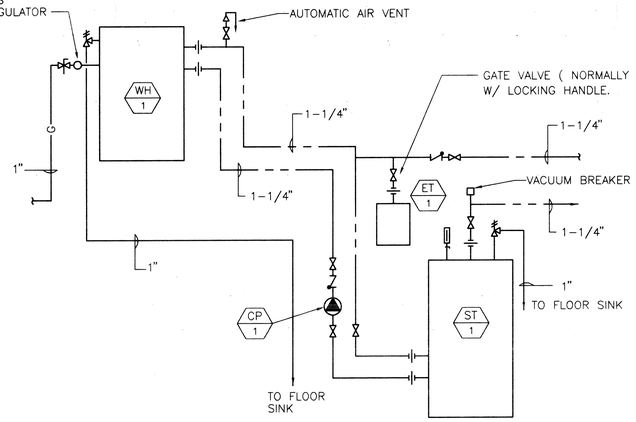

1 / P-1 DOMESTIC HOT WATER PIPING DIAGRAM
SCALE: NONE

KITCHEN EQUIPMENT AND FIXTURE CONNECTION SCHEDULE

CODE	DESCRIPTION	CW	HW	HWT	NPW	W	V	IW	GAS	REMARKS
1	HOT TOP WITH OVEN BASE	–	–	–	–	–	–	–	1"	[1] 115 CFH
6	GAS SOLENOID VALVE	–	–	–	–	–	–	–	1"	[1]
9	ICE MACHINE/BIN/WATER FILTER	1/2"	–	–	–	–	–	(2) 1/2"	–	[1][3] PROVIDE SHUT-OFF VALVES ON FILTER CONNECTIONS
11	UNDER COUNTER FREEZER	–	–	–	–	–	–	1/2"	–	[1][3]
12	UNDER COUNTER REFRIGERATOR	–	–	–	–	–	–	1/2"	–	[1][3]
15	TWO COMP. SINK WITH FAUCET	3/4"	3/4"	–	–	–	–	1 1/2"	–	[1]
16	HAND SINK	1/2"	–	1/2"	–	2"	1 1/2"	–	–	[1]
17	TWO COMP. POT SINK	–	–	–	–	2"	1 1/2"	–	–	[1] WASTE TO GREASE INTERCEPTOR
18	FAUCET	3/4"	3/4"	–	–	–	–	–	–	[1]
22	DISHWASHER	–	1"	–	–	–	–	1 1/2"	–	[1]
25	PIZZA OVEN	–	–	–	–	–	–	–	1"	[1] 130 CFH
27	PASTA COOKER	1/2"	1/2"	–	–	–	–	1 1/4"	3/4"	[1] 52.5 CFH
28	OVEN BURNER RANGE W/OVEN BASE/SALAMANDER	–	–	–	–	–	–	–	1"	[1] 192 CFH
31	BROILER	–	–	–	–	–	–	–	3/4"	[1] 84 CFH
33	REFRIGERATED CABINET	–	–	–	–	–	–	1/2"	–	[1][3]
37	GAS SOLENOID VALVE	–	–	–	–	–	–	–	1 1/2"	[1]
44	ESPRESSO MACHINE	1/2"	–	–	–	–	–	3/4"	–	[1] PROVIDE SHUT-OFF VALVES ON FILTER CONNECTIONS
46	ICE BIN	1/2"	–	–	–	–	–	1/2"	–	[1][3]
47	ICE BIN	1/2"	–	–	–	–	–	1/2"	–	[1][3]
52	HAND SINK	1/2"	–	1/2"	–	2"	1 1/2"	–	–	[1]
53	UNDERCOUNTER REFRIGERATOR	–	–	–	–	–	–	1/2"	–	[1][3]
54	SOUP WARMER	–	–	–	–	–	–	3/4"	–	[1]
55	REFRIGERATED SANDWICH TABLE	–	–	–	–	–	–	1/2"	–	[1][3]
LAV-1,2	LAVATORY	1/2"	–	1/2"	–	2"	1 1/2"	–	–	[2]
WC-1,2	WATER CLOSET	1 1/4"	–	–	–	4"	2"	–	–	[2][4]
UR-1,2	URINAL	1"	–	–	–	2"	1 1/2"	–	–	[2]
SS-1	SERVICE SINK	3/4"	3/4"	–	–	3"	2"	–	–	[2]
DF-1	DRINKING FOUNTAIN	1/2"	–	–	–	2"	1 1/2"	–	–	[2]
HB-1	HOSE BIBB	–	–	–	3/4"	–	–	–	–	[2]

NOTES:
[1] FURNISHED BY FOOD SERVICE EQUIPMENT CONTRACTOR. ROUGH IN AND FINAL CONNECTIONS BY PLUMBING CONTRACTOR. ALL WATER AND GAS CONNECTIONS TO BE PROVIDED WITH SHUT-OFF VALVES.
[2] FURNISHED AND INSTALLED BY PLUMBING CONTRACTOR.
[3] INSULATE INDIRECT WASTE LINE. [4] FOR WC-2 INSTALL FLUSH VALVE HANDLE ON THE WIDE SIDE OF STALL.

LEGEND AND ABBREVIATIONS

SYMBOL	ABBR	DESCRIPTION
WH 1		EQUIPMENT NUMBER
	S,W	SANITARY SOIL OR WASTE PIPING
	S,W	SANITARY SOIL OR WASTE PIPING BELOW SLAB
	V	VENT PIPING
	CW	DOMESTIC COLD WATER PIPING
	HW	DOMESTIC HOT WATER PIPING
G	G	NATURAL GAS PIPING
		SLOPE DOWN
	HB	HOSE BIBB
	FCO	FLOOR CLEANOUT
	WCO	WALL CLEANOUT
	TPRV	TEMPERATURE & PRESSURE RELIEF VALVE
	PRV	PRESSURE REDUCING VALVE
	SV	SOLENOID VALVE
	FD	FLOOR DRAIN
	FS	FLOOR SINK
	PD	PLANTER DRAIN
		LINE CONTINUED
	GV	GATE VALVE
	GC	GAS COCK
	CV	CHECK VALVE
	FFE	FINISHED FLOOR ELEVATION
	U.O.N.	UNLESS OTHERWISE NOTED
	FU	FIXTURE UNITS
	IW	INDIRECT WASTE
	AP	ACCESS PANEL
HWT	HWT	TEMPERED HOT WATER
CD	CD	CONDENSATE DRAIN
NPW	NPW	NON-POTABLE WATER
RWL	RWL	RAINWATER LEADER PIPING
OD	OD	OVERFLOW RAINWATER PIPING
	RD	ROOF DRAIN
	ORD	OVERFLOW ROOF DRAIN
	AFF	ABOVE FINISHED FLOOR
	RPBP	REDUCED PRESSURE BACKFLOW PREVENTER
	SSD	SEE STRUCTURAL DRAWINGS
	WHA	WATER HAMMER ARRESTOR

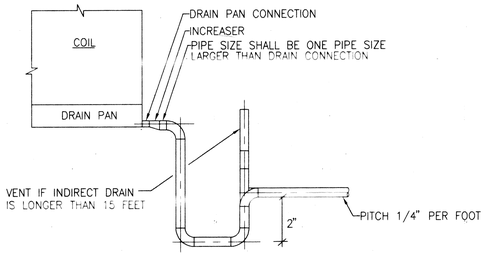

2 / P-1 CONDENSATE DRAIN TRAP PIPING DETAIL
SCALE: NONE

DRAINS AND CLEANOUT SCHEDULE

CODE	FLOOR FINISH	ZURN FIG. NUMBER	CONN.	TOP GR. MATERIAL	GRATE SIZE	REMARKS
FD-1	QUARRY TILE	Z-415	2"	NICKEL BRONZE	6"ø	
RD-1	–	Z-100	3"	DURA-COATED CAST IRON DOME	15"ø	
FS-1	QUARRY TILE	Z-1901	2"	CAST IRON W/A.R.E. COATING	12"X12"	8" SUMP DEPTH, HALF GRATE
ORD-1	–	Z-100-89	3"	DURA-COATED CAST IRON DOME	15"ø	WITH 2" HIGH EXTERNAL DAM
FS-2	QUARRY TILE	Z-1901	4"	CAST IRON W/A.R.E. COATING	12"x12"	8" SUMP DEPTH, HALF GRATE
WCO	–	Z-1468	2"/4"	STAINLESS STEEL COVER	5"/7"	NICKEL BRONZE PLUG
FCO	QUARRY TILE	Z-1400	4"	NICKEL BRONZE	6"ø	
GCO	–	Z-1474	4"	DURESIST COVER	9"ø	WITH INTERNAL CLEANOUT
PD-1	–	Z-352	2"	BRONZE DOME W/SS MESH SCREEN	6"ø	

EQUIPMENT ANCHORAGE NOTES

(1) ALL MECHANICAL AND ELECTRICAL EQUIPMENT SHALL BE BRACED OR ANCHORED TO RESIST A HORIZONTAL FORCE ACTING IN ANY DIRECTION USING THE FOLLOWING CRITERIA:

FIXED EQUIPMENT ON GRADE	20% OF OPERATING WEIGHT
FIXED EQUIPMENT ON STRUCTURE	40% OF OPERATING WEIGHT
EMERGENCY POWER EQUIPMENT ON GRADE	30% OF OPERATING WEIGHT
EMERGENCY POWER EQUIPMENT ON STRUCTURE	60% OF OPERATING WEIGHT

SIMULTANEOUS VERTICAL FORCE – USE 1/3 X HORIZONTAL FORCE.

FOR FLEXIBLE MOUNTED EQUIPMENT, SEE TITLE 24, SECTION 2312(g)2.

(2) WHERE ANCHORAGE DETAILS ARE NOT SHOWN ON THE DRAWINGS, THE FIELD INSTALLATION SHALL BE SUBJECT TO THE APPROVAL OF MECHANICAL ENGINEER AND THE FIELD REPRESENTATIVE OF THE OFFICE OF REGULATORY SERVICES (ORS)

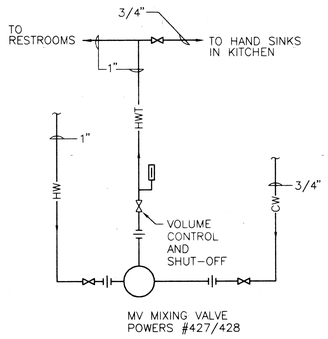

5 / P-1 MIXING VALVE MV-1 PIPING DIAGRAM
SCALE: NONE

PLUMBING EQUIPMENT SCHEDULE

CODE	DESCRIPTION	REMARKS
WH 1	GAS FIRED WATER HEATER "RAYPAK" MODEL W-133 OUTDOOR, 133 MBH INPUT, 108.8 MBH OUTPUT	LOCATION: ROOF WELL OPERATING WT.: 200 LBS.
ST 1	115 GALLONS STORAGE TANK "RAYPAK" MODEL 951044 ASME CODE CONSTRUCTION	LOCATION: FIRST FLOOR JANITOR ROOM OPERATING WT.: 1,400 LBS.
CP 1	CIRCULATING PUMP "BELL & GOSSET" SERIES 60, 15 GPM, 28 FT., 3/4 HP 208V/1 PHASE/60HZ.	LOCATION: FIRST FLOOR JANITOR ROOM
MV 1	MIXING VALVE "POWERS" HYDROGUARD MODEL 427/428, THERMOSTATIC MIXING VALVE, ROUGH BRONZE FINISH	LOCATION: FIRST FLOOR JANITOR ROOM
GI 1	GREASE INTERCEPTOR "JOSAM" MODEL 60127, 35 GPM, 70LBS. GREASE CAPACITY, A.R.E. COATED, W/EXTENSION	LOCATION: FIRST FLOOR DISHWASHING AREA
ET 1	EXPANSION TANK "WESSELS" MODEL 12 TX, 4.8 GAL., 10.6"ø, 16.2" LONG, 3/4" CONN.	LOCATION: FIRST FLOOR JANITOR ROOM

DRAWING INDEX

DWG. NO.	DESCRIPTION
P-1	LEGEND, SCHEDULES AND DETAILS
P-2	FIRST FLOOR PLAN
P-3	SECOND FLOOR PLAN
P-4	ROOF PLAN
P-5	PARTIAL FLOOR PLANS AND DETAILS

AQUADUCT
CONSTRUCTION
CONTRACT
AS NOV 1 97

REVISION	DATE	DESCRIPTION	INITIAL

ISSUE FOR PROGRESS REVIEW	DATE:
ISSUE FOR PLAN CHECK	
ISSUE FOR PERMIT	
ISSUE FOR BID	4/3/96
ISSUE FOR CONSTRUCTION	

SEAL:

CONSULTANT:
MECHANICAL DESIGN STUDIO
375 FREMONT ST., STE. 250
SAN FRANCISCO, CA 94105
TEL. (415) 284-0114
FAX (415) 284-0118

INTERACTIVE RESOURCES
ARCHITECTURE • PLANNING • ENGINEERING
117 PARK PLACE
POINT RICHMOND
CALIFORNIA 94801
(510) 236-7455
(FAX) 232-5325

PROJECT:
STUDENT UNION
Diablo Valley College
321 Golf Club Road
Pleasant Hill, CA. 94523
Contra Costa Community College District

STAMP:

JWD by GR 4-17-96
APPL. NUMBER:

KEY PLAN:

SHEET TITLE:
SCHEDULES, LEGEND, AND DRAWING INDEX

SCALE	AS NOTED
PROJ. NO.	A94087.04

PREPARATION AND REVIEW		
PURPOSE	PERSONAL/INITIAL	DATE
DRAWN BY		
PROJ. MGR.		
PEER REVIEW		

SHEET NUMBER:
P-1
NUMBER: OF:

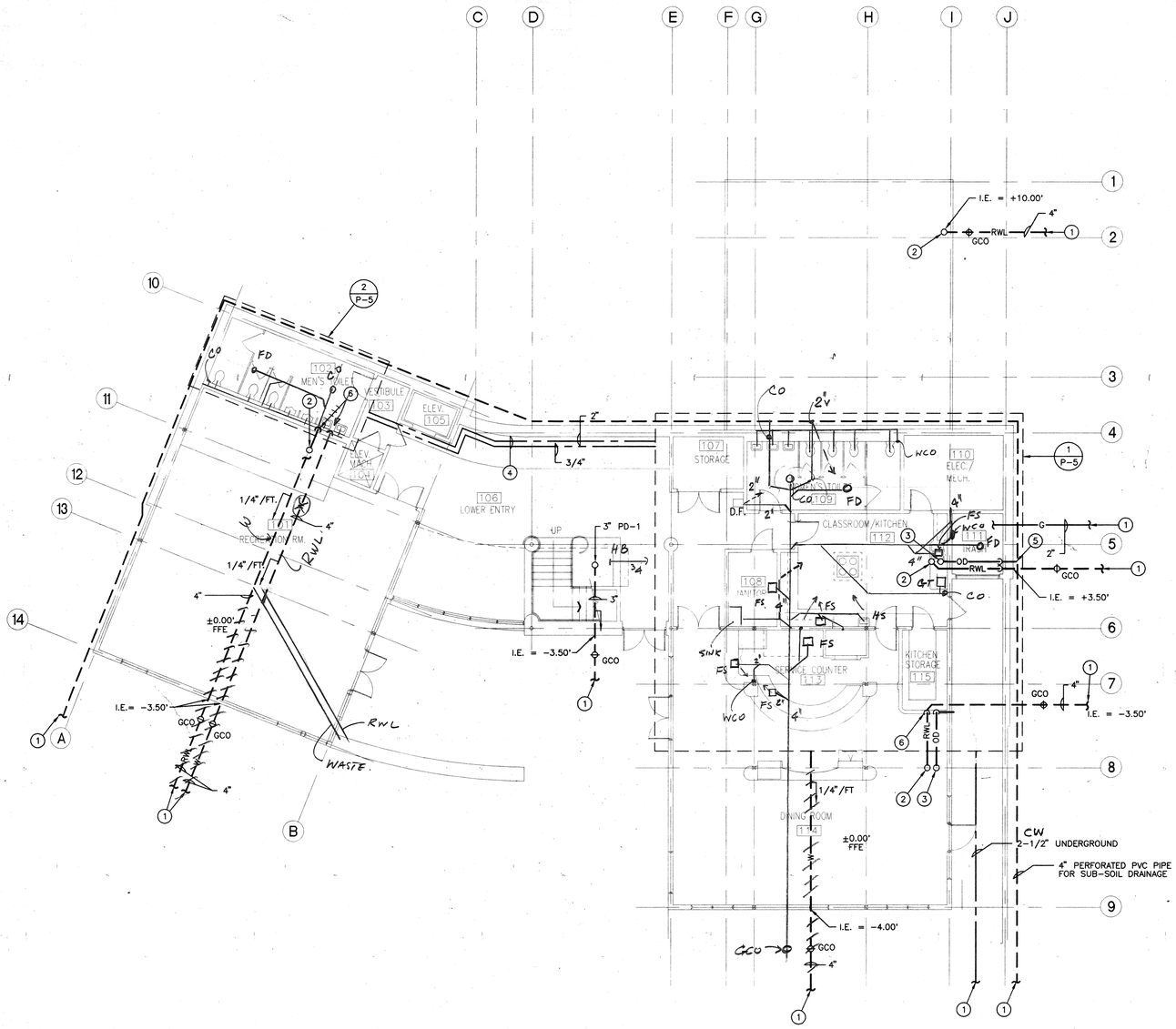

SHEET NOTES:

1. FOR CONTINUATION, REFER TO CIVIL DRAWINGS.
2. 4" RWL – UP
3. 4" OD – UP
4. PIPING RUNNING ABOVE DUCTWORK IN SOFFIT.
5. 4" OVERFLOW RAINWATER PIPING DOWN IN WALL TO SPILL ONTO THE GROUND. REFER TO ARCHITECTURAL DRAWINGS FOR DETAIL.
6. 4" RWL – DN

1 FIRST FLOOR PLAN – PLUMBING

SCALE: 1/8"=1'-0"

NORTH

REVISION	DATE	DESCRIPTION	INITIAL

ISSUE FOR PROGRESS REVIEW	DATE:
ISSUE FOR PLAN CHECK	
ISSUE FOR PERMIT	
ISSUE FOR BID	4/4/96
ISSUE FOR CONSTRUCTION	

SEAL:

REGISTERED PROFESSIONAL ENGINEER
DARELL ANGLE
No. M 26561
MECHANICAL
STATE OF CALIFORNIA

CONSULTANT:

MECHANICAL
DESIGN STUDIO
375 FREMONT ST., STE. 250
SAN FRANCISCO, CA 94105
TEL. (415) 284-0114
FAX (415) 284-0118

INTERACTIVE
RESOURCES
ARCHITECTURE • PLANNING • ENGINEERING
117 PARK PLACE
POINT RICHMOND
CALIFORNIA 94801
(510) 236-7435
(FAX.) 232-5325

PROJECT:

STUDENT UNION

Diablo Valley College
321 Golf Club Road
Pleasant Hill, CA. 94523

Contra Costa Community College District

STAMP:

BUILDING & SAFETY DEPT.
CITY OF CONCORD, CALIFORNIA
APPL 9 6 0 1 3 9
4-17-96

APPL. NUMBER:

KEY PLAN:

LICENSED ARCHITECT
RAY D. CHRISTIANSEN
C 20774
10/31/97

SHEET TITLE:

FIRST FLOOR PLAN

SCALE	AS NOTED
PROJ. NO.	A94087.04

PREPARATION AND REVIEW		
PURPOSE	PERSONAL/INITIAL	DATE
DRAWN BY		
PROJ. MGR.		
PEER REVIEW		

SHEET NUMBER:

P-2

NUMBER: OF:

AS NOTED
CONFORM
SEE
DATE NOV 1 97

HALF SCALE

55

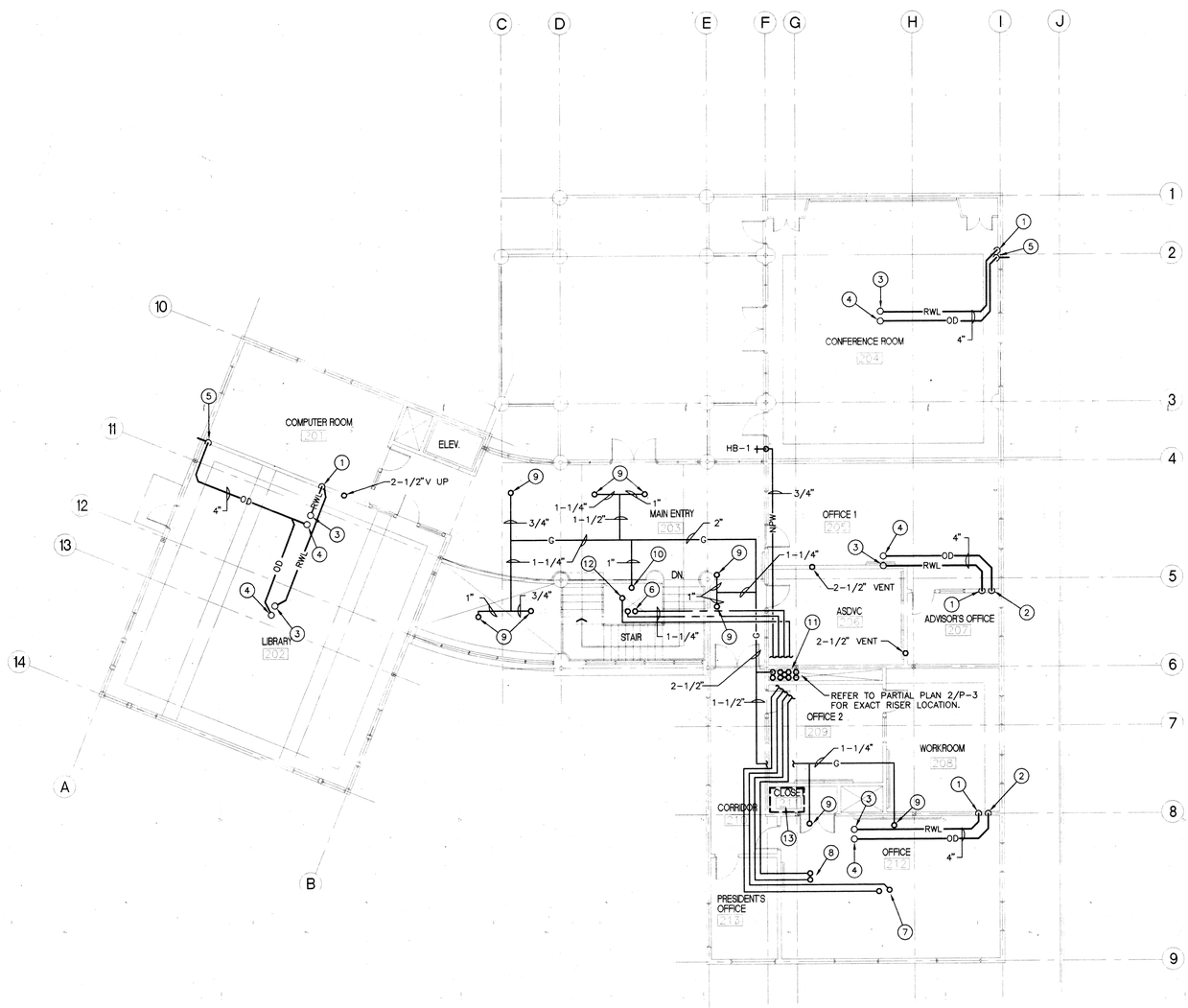

1 SECOND FLOOR PLAN – PLUMBING
SCALE: 1/8"=1'-0"

NORTH

SHEET NOTES

1. 4" RWL – DN
2. 4" OD – DN
3. 3" RWL – UP TO RD-1
4. 3" OD – UP TO ORD-1
5. 4" OVERFLOW RAINWATER PIPING DOWN IN WALL TO SPILL ONTO THE GROUND. REFER TO ARCHITECTURAL DRAWINGS FOR DETAIL.
6. (2) 1-1/4" DOMESTIC HOT WATER UP TO WATER HEATER ON ROOF.
7. 3/4" NON-POTABLE WATER AND 3/4" DRAIN TO MAU-1 ON ROOF.
8. 3/4" NON-POTABLE WATER AND 3/4" DRAIN TO MAU-2 ON ROOF. FOR FREEZE PROTECTION PIPING ASSEMBLY, REFER TO DETAIL ON DRAWING P-5.
9. NATURAL GAS PIPING UP TO AIR CONDITIONING UNIT ON ROOF.
10. NATURAL GAS PIPING UP TO WATER HEATER ON ROOF.
11. 2-1/2" G, (3) 3/4" NPW, (2) 1-1/4" HW AND (2) 3/4" DRAIN LINES, 1" TPRV DISCHARGE – DN IN CHASE.
12. 1" TPRV DISCHARGE – UP TO WATER HEATER ON ROOF.
13. ROOF ACCESS HATCH AND LADDER. KEEP CLEAR.

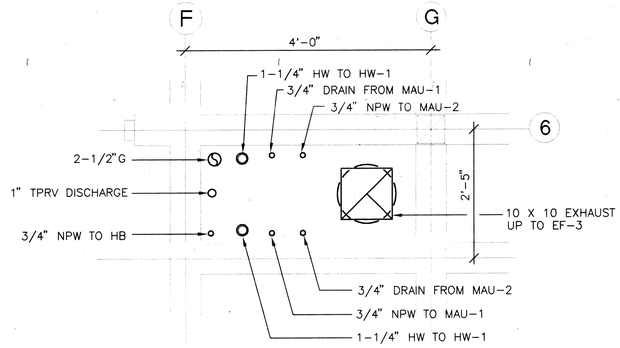

2 PARTIAL FLOOR PLAN – PLUMBING
SCALE: 1"=1'-0"

REVISION	DATE	DESCRIPTION	INITIAL

ISSUE FOR PROGRESS REVIEW	DATE:
ISSUE FOR PLAN CHECK	
ISSUE FOR PERMIT	
ISSUE FOR BID	4/4/96
ISSUE FOR CONSTRUCTION	

SEAL:

REGISTERED PROFESSIONAL ENGINEER DOREL ANGHEL No. M 26561 Exp. 6/96 MECHANICAL STATE OF CALIFORNIA

CONSULTANT:

MECHANICAL DESIGN STUDIO
375 FREMONT ST., STE. 250
SAN FRANCISCO, CA 94105
TEL. (415) 284-0114
FAX (415) 284-0118

INTERACTIVE RESOURCES
ARCHITECTURE • PLANNING • ENGINEERING
117 PARK PLACE
POINT RICHMOND
CALIFORNIA 94801
(510) 236-7435
(FAX.) 232-5325

PROJECT:

STUDENT UNION

Diablo Valley College
321 Golf Club Road
Pleasant Hill, CA. 94523

Contra Costa Community College District

STAMP:

LS GR 4-17-96

APPL. NUMBER:

KEY PLAN:

10/31/97

SHEET TITLE:

SECOND FLOOR PLAN

SCALE	AS NOTED
PROJ. NO.	A94087.04

PREPARATION AND REVIEW

PURPOSE	PERSONAL/INITIAL	DATE
DRAWN BY		
PROJ. MGR.		
PEER REVIEW		

SHEET NUMBER:

P-3

NUMBER: OF:

AQUADUCT

NOV 1 97

56

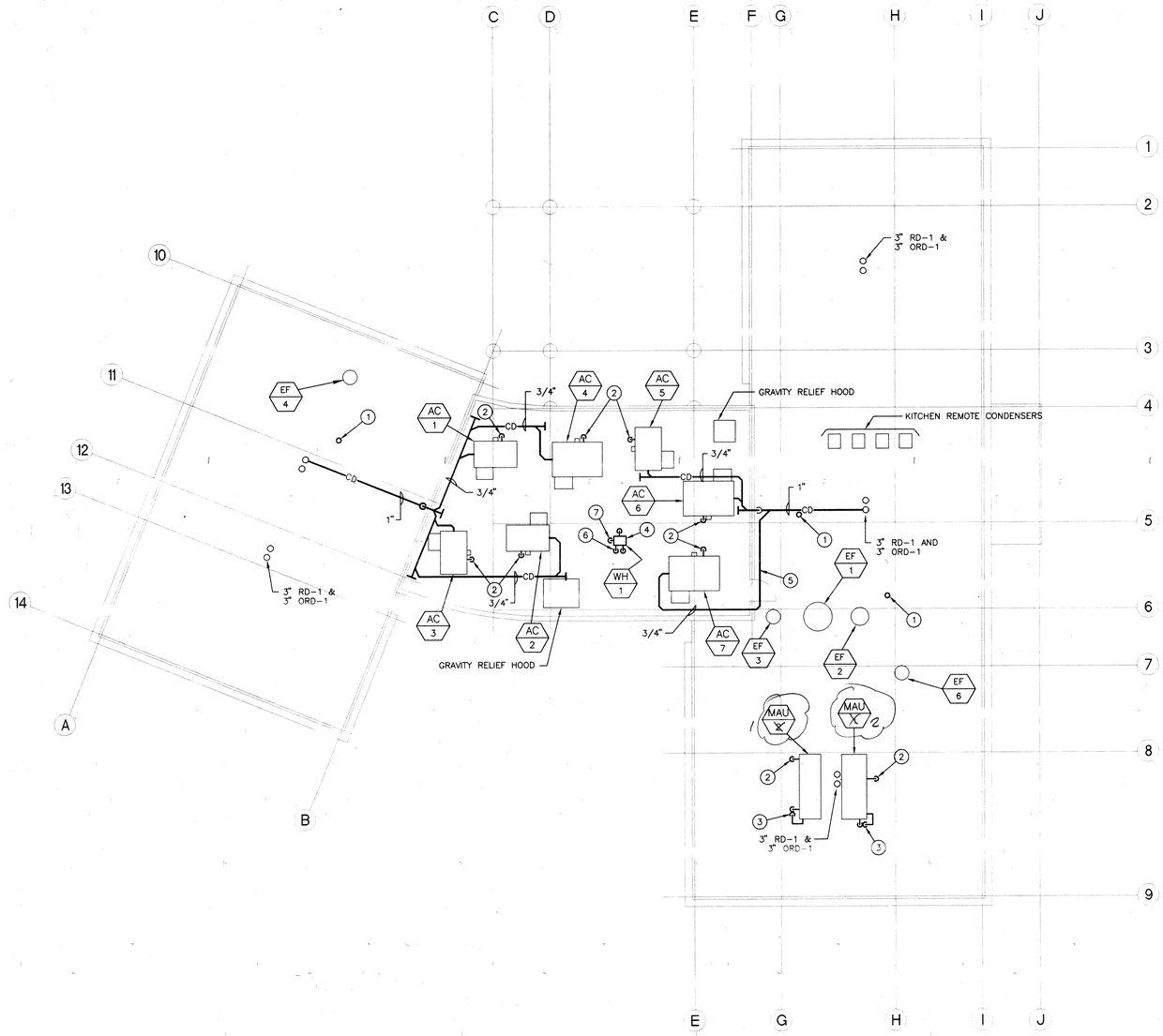

SHEET NOTES:

1. 2-1/2" VTR
2. NATURAL GAS CONNECTION WITH GAS COCK – DN
3. 3/4" NPW & 3/4" DRAIN – DN
4. WATER HEATER TO BE LOCATED 10'-0" MIN. FROM OUTSIDE AIR INTAKES OF ADJACENT AIR CONDITIONING UNITS. COORDINATE WITH MECHANICAL CONTRACTOR.
5. RUN CONDENSATE DRAIN PIPING ALONG ROOF WELL WALL AND BELOW ROOF WELL ACCESS GATE.
6. 1-1/4" DOMESTIC HOT WATER – DN.
7. 1" TPRV DISCHARGE – DN.

1 ROOF PLAN – PLUMBING

SCALE: 1/8"=1'-0"

XQUADUCT

Nov 1 97

REVISION	DATE	DESCRIPTION	INITIAL

ISSUE FOR PROGRESS REVIEW	DATE:
ISSUE FOR PLAN CHECK	
ISSUE FOR PERMIT	
ISSUE FOR BID	4/4/96
ISSUE FOR CONSTRUCTION	

SEAL:

REGISTERED PROFESSIONAL ENGINEER — No. M 26561 — Exp. 12-31-97 — MECHANICAL — STATE OF CALIFORNIA

CONSULTANT:

MECHANICAL DESIGN STUDIO
375 FREMONT ST., STE. 250
SAN FRANCISCO, CA 94105
TEL. (415) 284-0114
FAX (415) 284-0118

INTERACTIVE RESOURCES
ARCHITECTURE • PLANNING • ENGINEERING
117 PARK PLACE
POINT RICHMOND
CALIFORNIA 94801
(510) 236-7435
(FAX) 232-5325

PROJECT:

STUDENT UNION

Diablo Valley College
321 Golf Club Road
Pleasant Hill, CA. 94523

Contra Costa Community College District

STAMP:

APPL. NUMBER:

KEY PLAN:

SHEET TITLE:

ROOF PLAN

SCALE	AS NOTED
PROJ. NO.	A94087.04

PREPARATION AND REVIEW		
PURPOSE	PERSONAL/INITIAL	DATE
DRAWN BY		
PROJ. MGR.		
PEER REVIEW		

SHEET NUMBER:

P-4

NUMBER: OF:

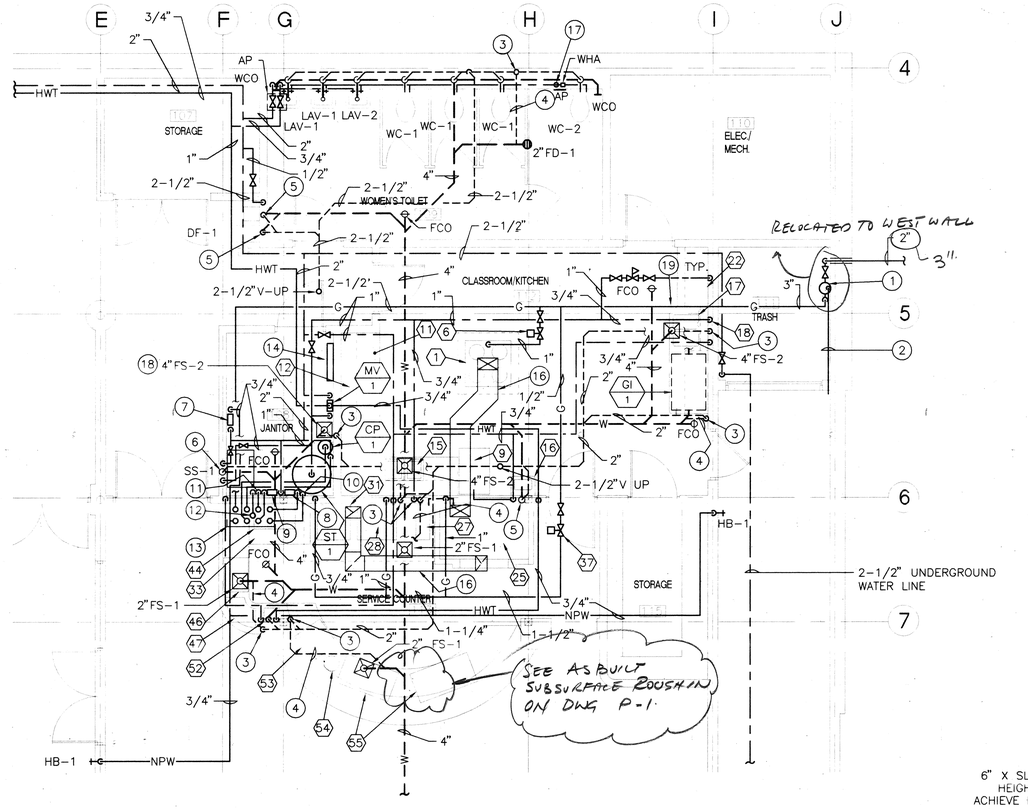

1 P-5 PARTIAL PLAN - PLUMBING
SCALE: 1/4"=1'-0"

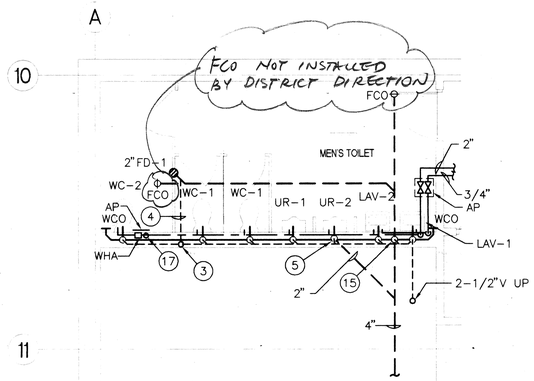

2 P-5 PARTIAL PLAN - PLUMBING
SCALE: 1/4"=1'-0"

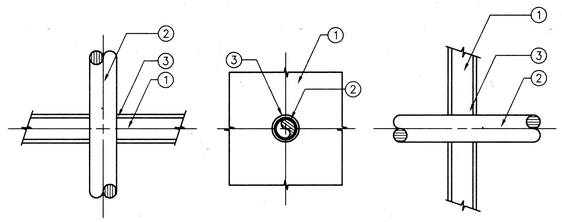

PACK SPACE BETWEEN PIPING AND PENETRATION OPENING WITH MATERIAL APPROVED BY UNDERWRITERS LABORATORIES FOR THROUGH PENETRATION FIRE STOP SYSTEMS. MATERIALS, METHODS, AND INSTALLATION SHALL BE IN ACCORDANCE WITH UL APPROVED LISTING AND SHALL BE DESIGNED TO ACT AS A FIRESTOP AS WELL AS A COLD SMOKE, NOXIOUS GAS AND WATER SEALANT. SUBMIT LISTING NUMBERS AND DETAILS FROM UL FIRE RESISTANT DIRECTORY FOR ALL SUCH SYSTEMS TO BE USED. INSULATE PIPES 3 FEET TO EITHER SIDE OF PENETRATION WITH MATERIAL SPECIFIED IN THE UL FIRE RESISTANCE DIRECTORY IF REQUIRED TO OBTAIN THE T- AND F- RATINGS.

1. WALL AND FLOOR
2. PIPE OR INSULATED PIPE
3. FIRE BARRIER - "3M PRODUCTS INC." FIRE BARRIER CAULK CP25 WB+, CP 25WB, CP 25 N/S AND S/L, FIRE BARRIER 2000+, 2000 AND 2003 SILICONE SEALANTS, MOLDABLE PUTTY.

USE FOLLOWING APPLICABLE UL SYSTEMS FOR THE CONSTRUCTION TYPES LISTED.

CONSTRUCTION TYPE	THROUGH PENETRATION FIRESTOP SYSTEM NUMBERS
CONCRETE FLOORS	CAJ1007 (F-2, 3, 4 HR; T-0 HR), CAJ1010 (F-2 HR; T-0 HR), CAJ1012 (F-1 HR; T-0 HR), CAJ1017 (F-2, 3 HR, T-0 HR), CAJ1021 (F-3 HR; T-0, 1.5 HR), CAJ1027 (F-3 HR; T-0 HR), CAJ1044 (F-2, 3, 4 HR; T-0 HR), CAJ1058 (F-3 HR; T-3 HR), CAJ1063 (F-3 HR; T-0.5 HR), CAJ1112 (F-2 HR; T-0 HR), CAJ1175 (F-2 HR; T-0 HR), CAJ5001 (F-1.5, 2, 3 HR; T-0, 0.5, 0.75, 1 HR), CAJ5002 (F-2, 3 HR; T-0, 0.5, 1 HR), CAJ5003 (F-2 HR; T-0.5, 1 HR), CAJ5024 (F-2, 3 HR; T-1, 1.5 HR), CAJ5060 (F-2, 3 HR; T-0, 0.75, 1, 1.5 HR), CBJ1020 (F-4 HR; T-0, 0.75, 1.5 HR)
CONCRETE OR MASONRY WALLS	CAJ1001 (F-3 HR; T-0 HR), CAJ1017 (F-2, 3 HR; T-0 HR), CAJ1021 (F-3 HR; T-0, 1.5 HR), CAJ1027 (F-3 HR; T-0 HR), CAJ1044 (F-2, 3, 4 HR; T-0 HR), CAJ1058 (F-3 HR; T-0 HR), CAJ1063 (F-3 HR; T-0.5 HR), CAJ1112 (F-2 HR; T-0 HR), CAJ1175 (F-2 HR; T-0 HR), CAJ5001 (F-1.5, 2, 3 HR; T-0, 0.5, 0.75, 1 HR), CAJ5002 (F-2, 3 HR; T-0, 0.5, 1 HR), CAJ5003 (F-2 HR; T-0.5, 1 HR), CAJ5024 (F-2, 3 HR; T-1, 1.5 HR), CAJ5060 (F-2, 3 HR; T-0, 0.75, 1, 1.5 HR), CBJ1020 (F-4 HR; T-0, 0.75, 1.5 HR)
GYPSUM WALLBOARD/STUD WALLS	WL1001 (F-1, 2, 3, 4 HR; T-0, 1, 2, 3, 4 HR), WL1002 (F-1, 2 HR; T-0 HR), WL1003 (F-1, 2 HR; T-0 HR), WL2002 (F-1, 1.5, 2 HR, T-0.75, 1, 1.5, 2 HR), WL2003 (F-1, 2 HR; T-1, 2 HR), WL2004 (F-2 HR; T-0.75, 1.5, 2 HR), WL2005 (F-1, 2 HR; T-0, 0.75, 1, 1.5, 2 HR), WL5001 (F-1, 2 HR; T-1, 1.5 HR), WL5002 (F-1, 2 HR; T-1, 2 HR)

8 P-5 PIPE PENETRATION THROUGH FIRE RATED BARRIER
NOT TO SCALE

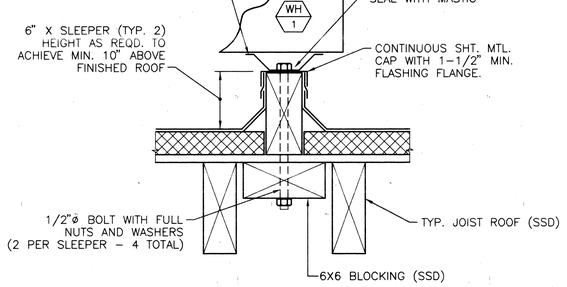

6 P-5 WH-1 SUPPORT DETAIL
NO SCALE

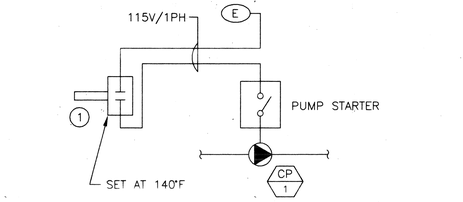

1. STORAGE TANK IMERSION AQUASTAT (HONEYWELL OR EQUAL)

7 P-5 CIRCULATING PUMP CONTROL DIAGRAM
NOT TO SCALE

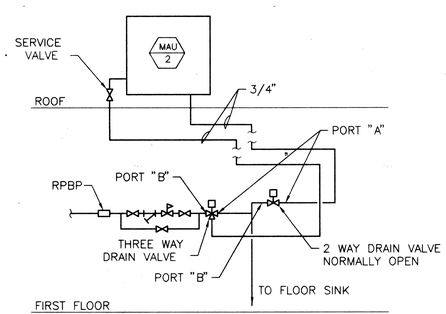

3 P-5 FREEZE PROTECTION FILL AND DRAIN ASSEMBLY FOR MAU-2
NO SCALE

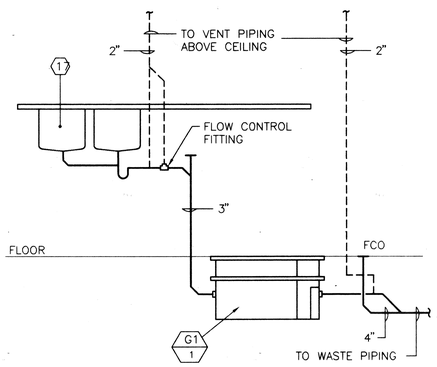

4 P-5 GREASE INTERCEPTOR PIPING DIAGRAM
NO SCALE

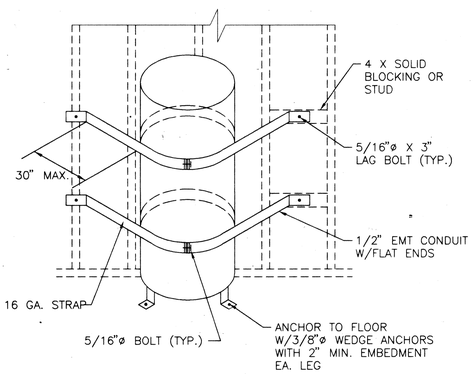

5 P-5 SEISMIC BRACE SYSTEM FOR HOT WATER STORAGE TANK ST 1
NO SCALE

SHEET NOTES:

1. NATURAL GAS SHUT-OFF VALVE AND REGULATOR (1,900 CFH, INLET PRESSURE 5 PSI, OUTLET PRESSURE 7 IN W.C.).
2. 3/4" NATURAL GAS REGULATOR VENT TO TERMINATE OUTSIDE AT MIN. 10'-0" ABOVE WALKWAY.
3. 2" V - DN.
4. 2" VENT RUNNING BELOW SLAB.
5. 2" W - DN.
6. 3" W - DN.
7. DOUBLE CHECK BACKFLOW PREVENTER ASSEMBLY FOR NON-POTABLE WATER SYSTEM SUPPLYING HOSE BIBBS.
8. FREEZE PROTECTION FILL AND DRAIN ASSEMBLY FOR MAU-2. REFER TP DETAIL 3/P-5.
9. REDUCED PRESSURE BACKFLOW PREVENTER ASSEMBLY FOR MAU-1 WATER CONNECTION.
10. 3/4" DRAIN FROM MAU-2, REFER TO DETAIL 3/P-5.
11. 3/4" DRAIN FROM MAU-1 TO FLOOR SINK.
12. 1" TPRV DISCHARGE FROM WH-1 ON ROOF. RUN TO FLOOR SINK.
13. 2-1/2" GAS, 3/4" NPW TO HOSE BIBB, (2) 1-1/4" HW TO WH-1, (2) 3/4" NPW TO MAU'S, (2) 3/4" DRAIN LINES FROM MAU'S, 1" TPRV DISCHARGE-UP TO SECOND FLOOR SHAFT.
14. TEMPERATURE CONTROL PANEL - REFER TO HVAC DRAWINGS.
15. 4" W - DN.
16. COORDINATE PIPING ROUTING WITH GREASE EXHAUST DUCT LOCATION.
17. PROVIDE TRAP PRIMER IN WALL WITH ACCESS PANEL. SAME PANEL TO BE USED AS ACCESS TO WHA.
18. PROVIDE TRAP PRIMER ON WALL.
19. FOR INDIRECT WASTE ROUTING REFER TO FOOD SERVICE DRAWING FS3 (TYPICAL).

REVISION	DATE	DESCRIPTION	INITIAL

ISSUE FOR PROGRESS REVIEW	DATE:
ISSUE FOR PLAN CHECK	
ISSUE FOR PERMIT	
ISSUE FOR BID	4/4/96
ISSUE FOR CONSTRUCTION	

SEAL:

CONSULTANT:

MECHANICAL DESIGN STUDIO
375 FREMONT ST., STE. 250
SAN FRANCISCO, CA 94105
TEL. (415) 284-0114
FAX (415) 284-0118

INTERACTIVE RESOURCES
ARCHITECTURE • PLANNING • ENGINEERING
117 PARK PLACE
POINT RICHMOND
CALIFORNIA 94801
(510) 236-7435
(FAX.) 232-5325

PROJECT:

STUDENT UNION

Diablo Valley College
321 Golf Club Road
Pleasant Hill, CA. 94523

Contra Costa Community College District

STAMP:

APPL. NUMBER:

KEY PLAN:

SHEET TITLE:

PARTIAL FLOOR PLANS

SCALE	AS NOTED
PROJ. NO.	A94087.04
PREPARATION AND REVIEW	
PURPOSE	PERSONAL/INITIAL / DATE
DRAWN BY	
PROJ. MGR.	
PEER REVIEW	

SHEET NUMBER:

P-5

NUMBER: OF:

AQUADUCT

CONTRACT

DATE NOV 1 97

AIR CONDITIONING UNIT SCHEDULE

MANUFACTURER: CARRIER

CODE	AREA SERVED	COOL. TONS (1)	FAN CFM	FAN ESP ("WC)	MIN. OSA (CFM)	MODEL & TYPE	COOLING ENT. COND.	COOLING TOTAL MBH	COOLING SENS. MBH	COOLING ENT DB	COOLING ENT WB	COOLING LVG DB	COOLING LVG WB	HEATING INPUT MBH	HEATING OUPUT MBH	ELECTRICAL COMPR. QTY	ELECTRICAL COMPR. RLA/EA	ELECTRICAL COMPR. LRA/EA	ELECTRICAL EVAP FAN FLA	ELECTRICAL COND FAN FLA	ELECTRICAL COMB. FAN FLA	ELECTRICAL MCA	ELECTRICAL VOLT/ PHASE	EER	OPER WT LBS(5)	REMARKS
AC-1	RECREATION RM.	4	1600	1.2(4)	300	48HJD-005	95'F	45.3	39.9	80	63	57	53	72.0	59	1	7.4	49.5	2.2	0.4	0.3	9.7	460/3	11.05	850	
AC-2	COMPUTER RM.	3	1000	0.8(4)	360	48HJE-004	95'F	34.9	29.8	82	64	55	52	72.0	59	1	5.1	39.0	2.2	0.4	0.3	9.0	460/3	11.20	800	
AC-3	LIBRARY	5	1800	1.0(4)	900	48HJE-006	95'F	59.5	56.2	85	65	56	54	115.0	93	1	9.0	62.0	2.6	0.8	0.3	14.7	460/3	11.00	900	
AC-4	LOBBIES/TOILETS	10	4000	1.5(4)	600	48HJD-012	95'F	114.7	103.4	80	63	56	53	180.0	148	2	10.0	62.0	4.8	1.4	0.3	28.7	460/3	11.00	1500	(7)
AC-5	CONFERENCE RM.	5	2000	0.8(4)	560	48HJE-006	95'F	57.8	54.6	81	63	56	53	115.0	93	1	9.0	62.0	2.6	0.8	0.3	14.7	460/3	11.00	900	
AC-6	OFFICES	7.5	3000	1.4	650	48HJD-008	95'F	85.4	77.6	80	63	56	53	125.0	102	2	6.4	44.0	3.4	1.4	0.3	19.2	460/3	11.00	1250	(7)
AC-7	DINING	7.5	2600	1.6	1200	48HJD-008	95'F	84.6	79.8	84	64	56	53	125.0	102	2	6.4	44.0	3.4	1.4	0.3	19.2	460/3	11.00	1250	(7)

NOTES:
(1) AT UL(ARI) CONDITIONS
(2) ALL UNITS TO MEET C.A.C TITLE 24 ENERGY REGULATIONS.
(3) PROVIDE INTEGRATED VARISLIDE ECONOMIZER W/ SOLID STATE OUSIDE AIR ENTHALPY CONTROL FOR AC-4,6 & 7, MOTORLESS 100% OA TWO POSITION DAMPER FOR AC-2,3& 5 AND MANUAL OUTSIDE AIR DAMPER/HOOD FOR AC-1.
(4) FURNISH AND INSTALL FIELD-SUPPLIED DRIVES AS REQUIRED TO PROVIDE LISTED AIR FLOWS.
(5) UNIT WEIGHT INCLUDES ROOF CURB, VIB AND ALL ACCESSORIES.
(6) PROVIDE NON-STANDARD 18" HIGH ROOF CURBS FOR ALL UNITS, SAME GAUGE AND REINFORCEMENTS AS STANDARD 24" CURB.
(7) PROVIDE CAN-FAB SPRING TYPE RAIL ISOLATOR W/ MIN. 1.0" DEFLECTION AND INTEGRAL SEISMIC RESTRAINTS.
(8) SEE SPECIFICATIONS AND CONTROL DIAGRAMS FOR ADDITIONAL REQUIREMENTS INCLUDING CONTROLS.
(9) PROVIDE ACUTHERM SMC VAV AND PIM BY-PASS DAMPER CONTROL SYSTEMS FOR AC-7. SEE SPECIFICATIONS AND CONTROL DIAGRAMS FOR COMPLETE REQUIREMENTS.

MAKE UP AIR UNIT SCHEDULE

CODE	AREA SERVED	MFR AND MODEL	TYPE	FAN CFM	FAN ESP. WG	FAN HP	GAS INPUT KBUTH	LOCATION	OPER WT #	REMARKS
MAU-1	SERVICE AREA	ARES 225	PACKAGED OUTDOOR WITH EVAP. COOLING	4460	0.75"	2.0	225.0	ROOF	1,100	(1) INTERLOCK WITH EF-1
MAU-2	CLASSROOM/ KITCHEN	STERLING RT-10-B-1	ROOFTOP WITH EVAP. COOLING	1600	0.80"	1.0	100.0(3)	ROOF	1,300	(2) INTERLOCK WITH EF-2

NOTES:
(1) PROVIDE WITH MODEL SH-1 HIGH EFFICIENCY EVAP. UNIT (23.8 SQ.FT. MEDIA AREA). 24 VOLT TRANSFORMER, REMOTE FAN INTERLOCK RELAY, REMOTE CONTROL PANEL AND TWO STAGE GAS VALVE.
(2) PROVIDE WITH 12" DEEP EVAP. MEDIA, 100% STAINLESS STEEL HEAT EXCHANGER AND BURNERS, TWO STAGE GAS VALVE, REMOTE CONTROL PANEL, FREEZE PROTECTION FILL AND DRAIN KIT, 2" THROWAWAY FILTERS, REMOTE BULB DUCTSTAT AND REMOTE FAN INTERLOCK RELAY.
(3) DERATE INPUT OF MAU-2 TO PROVIDE 70 KBUTH OUTPUT.
(4) SEE PLAN FOR LEFT OR RIGHT HAND CONNECTIONS
(5) 460 VOLT/3 PHASE
(6) NATURAL GAS
(7) SEE SPECIFICATIONS AND CONTROL DIAGRAMS FOR ADDITIONAL REQUIREMENTS INCLUDING CONTROLS.

EXHAUST FAN SCHEDULE

MFR.: GREENHECK

CODE	FAN CFM	S.P. ("WC)	TYPE AND MODEL	MOTOR BHP	MOTOR HP	MOTOR VOLT/ø	SERVICE	LOCATION	OPER WT #	REMARKS
EF-1	5660	1.25	UP-BLAST CENT. CUBE - 300 HP	2.0	3	460/3	SERVICE AREA	ROOF	300	(1) (2)
EF-2	1600	1.5	UP-BLAST CENT. CUBE - 160 HP	0.7	1	460/3	CLASSROOM/ KITCHEN	ROOF	100	(1) (2)
EF-3	650	0.75	ROOFTOP CENT. GB - 90	0.16	1/4	115/1	WOMENS TOILET	ROOF	50	(1) (4)
EF-4	600	0.75	ROOFTOP CENT. GB - 90	0.15	1/4	115/1	MENS TOILET	ROOF	50	(1) (4)
EF-5	900	0.375	IN-LINE CABINET CSP-162A	-	455 W.	115/1	ELEC. RM.	TRASH RM.	60	(3)
EF-6	600	0.25	ROOFTOP CENT. G-100-B	0.05	1/6	115/1	WORK ROOM 208	ROOF	50	(1) (4)

NOTES:
(1) PROVIDE WITH 18" HIGH MFR'S MODEL GPI ROOF CURB (WOOD NAILER AND W/O CANT).
(2) PROVIDE CONSTRUCTION AND ACCESSORIES TO MEET UL 762 LABELED FOR KITCHEN GREASE EXHAUST
(3) PROVIDE WITH MANUFACTURER'S HANGING VIBRATION ISOLATOR KIT.
(4) PROVIDE WITH MANUFACTURER'S BACKDRAFT DAMPER.

EQUIPMENT ANCHORAGE NOTES

1. ALL MECHANICAL AND ELECTRICAL EQUIPMENT SHALL BE BRACED OR ANCHORED TO RESIST A HORIZONTAL FORCE ACTING IN ANY DIRECTION USING THE FOLLOWING CRITERIA:

FIXED EQUIPMENT ON GRADE	20% OF OPERATING WEIGHT
FIXED EQUIPMENT ON STRUCTURE	40% OF OPERATING WEIGHT
EMERGENCY POWER EQUIPMENT ON GRADE	30% OF OPERATING WEIGHT
EMERGENCY POWER EQUIPMENT ON STRUCTURE	60% OF OPERATING WEIGHT

SIMULTANEOUS VERTICAL FORCE - USE 1/3 X HORIZONTAL FORCE.

FOR FLEXIBLE MOUNTED EQUIPMENT, SEE TITLE 24, SECTION 1630.2

2. WHERE ANCHORAGE DETAILS ARE NOT SHOWN ON THE DRAWINGS, THE FIELD INSTALLATION SHALL BE SUBJECT TO THE APPROVAL OF MECHANICAL ENGINEER AND THE FIELD REPRESENTATIVE OF THE OFFICE OF REGULATION SERVICES (ORS)

AIR OUTLET SCHEDULE

MFR: TITUS (U.O.N.)

CODE	MODEL	DESCRIPTION
CSD-1	PSS-NT	PERFORATED PLATE CEILING SUPPLY DIFFUSER WITH STAR PATTERN DEFLECTOR, NOMINAL 24X24 FACE WITH BORDER FOR NARROW TEE LAY-IN T-BAR CEILINGS. SEE PLAN FOR ROUND OR SQUARE NECK SIZE.
CSD-2	PAS	PERFORATED PLATE CEILING SUPPLY DIFFUSER WITH ADJUSTABLE PATTERN DEFLECTORS, AND BORDER TYPE 1 FOR GYPSUM BOARD CEILINGS AND OBD. SEE PLAN FOR SQUARE NECK AND FRAME SIZES.
CSD-3	MCD-NT	MODULAR CORE-LOUVER FACE CEILING SUPPLY DIFFUSER WITH NOMINAL 24X24 FACE WITH BORDER FOR NARROW TEE LAY-IN T-BAR CEILINGS. SEE PLAN FOR SQUARE NECK SIZE.
CSD-4	MCD	SAME AS CSD-4 EXCEPT WITH BORDER TYPE 1 FOR SURFACE MOUNTING IN GYPSUM BOARD CEILINGS.
CRG-1/ CEG-1	PAR-NT	PERFORATED PLATE CEILING RETURN GRILLE WITH NOMINAL 24X24 FACE WITH BORDER FOR NARROW TEE LAY-IN T-BAR CEILINGS. SEE PLAN FOR ROUND NECK SIZE.
CRG-2/ CER-2	PAR	PERFORATED PLATE CEILING RETURN/EXHAUST REGISTER WITH OBD AND BORDER TYPE 1 FOR GYPSUM BOARD CEILINGS. SEE PLAN FOR SQUARE NECK SIZES. U.O.N., FRAMES TO BE AS SMALL AS POSSIBLE FOR LISTED NECK SIZE. OMIT OBD AT GRILLES.
LSD-1	FL-25 FLOW BAR	LINEAR SUPPLY DIFFUSER WITH SINGLE 2 1/2" WIDE SLOT, BORDER TYPE 33 WITH HARD CEILING CLIPS FOR CONCEALED MOUNTING IN GYPSUM BOARD CEILINGS, MITERED NON-90° CORNERS AND END FLANGES AND MANUFACTURER'S PLENUMS WITH INTERIOR ACOUSTICAL LINING.
WSR-1	SERIES 1700	REVERSABLE CORE NARROW BLADE WALL SUPPLY REGISTER WITH MODEL 07 ADJUSTABLE BACK BLADES AND OBD.
WSG-2	300RS	DOUBLE DEFLECTION BAR FACED WALL SUPPLY GRILLE.
WRG-1	SERIES 1700	SAME AS WSR-1 EXCEPT WITHOUT BACK BLADES AND OBD.
WRG-2/ WER-2/ WEG-2	355RL	SINGLE DEFLECTION BAR FACED WALL RETURN/EXHAUST REGISTER WITH OBD. OMIT OBD AT GRILLE.

NOTES: (1) U.O.N. ALL AIR OUTLETS TO BE STEEL CONSTRUCTION WITH OFF-WHITE FINISH. INTERIORS OF PERFORATED PLATE MODELS TO BE FLAT BLACK.

LEGEND AND ABBREVIATIONS

SYMBOL	ABBR	DESCRIPTION
		DETAIL NUMBER / DRAWING NUMBER
		SECTION NUMBER / DRAWING NUMBER
		EQUIPMENT IDENTIFICATION / EQUIPMENT NUMBER
CODE / SIZE CFM		AIR OUTLET (SIZE IS INLET SIZE)(4 WAY U.O.N.)
	CSD	CEILING SUPPLY DIFFUSER
	CRG/R	CEILING RETURN GRILLE/REGISTER
	CEG/R	CEILING EXHAUST GRILLE/REGISTER
	WSG/R	WALL SUPPLY GRILLE/REGISTER
	WRG/R	WALL RETURN GRILLE/REGISTER
	WEG/R	WALL EXHAUST GRILLE/REGISTER
		SECTION THRU SUPPLY OR OUTSIDE AIR DUCT
		SECTION THRU RETURN
		SECTION THRU EXHAUST
	R (D)	DUCT RISE OR DROP
OR	AL	ACOUSTICAL LINING (1" FIBERGLASS U.O.N.)
		DIRECTION OF AIRFLOW
	FC	FLEXIBLE DUCT CONNECTION
	VD/FD	VOLUME DAMPER/FIRE DAMPER
OR	DSD	DUCT MOUNTED SMOKE DETECTOR
	TV	TURNING VANES
		FLEXIBLE DUCT
		SQUARE TO ROUND DUCT
		REDUCING TRANSITION
OR		REDUCING TRANSITION
		LINE CONTINUED
	CFF	CAPPED FOR FUTURE
D	CD,D	CONDENSATE DRAIN
T	TSTAT	THERMOSTAT (MOUNTED AT 4'-0" AFF)
S		ROOM TEMPERATURE SENSOR (MOUNTED AT 4'-0" AFF)
SD	SD	SMOKE DETECTOR
SP		STATIC PRESSURE SENSOR
	AD	ACCESS DOOR (DUCT)
	AP	ACCESS PANEL (CEILING)
	EA,OA	EXHAUST AIR, OUTSIDE AIR
	RA,SA	RETURN AIR, SUPPLY AIR
	MA	MAKE UP AIR
	BOD	BOTTOM OF DUCT
	OBD	OPPOSED BLADE DAMPER
	UON	UNLESS OTHERWISE NOTED
	NIMC	NOT IN MECHANICAL CONTRACT
	SAD	SEE ARCHITECTURAL DRAWINGS
	SSD	SEE STRUCTURAL DRAWINGS
	SPD	SEE PLUMBING DRAWINGS
	SKD	SEE KITCHEN DRAWINGS
	DL	DOOR LOUVER (NFA LISTED ON PLAN)
	EQ	EQUAL
	NFA	NET FREE AREA
	SQ. FT.	SQUARE FOOT
	EMS	ENERGY MANAGEMENT SYSTEM
	TCP	TEMPERATURE CONTROL PANEL
	AFF	ABOVE FINISHED FLOOR

DRAWING INDEX

DWG. NO.	DESCRIPTION
M-1	LEGEND AND SCHEDULES
M-2	FIRST FLOOR PLAN
M-3	SECOND FLOOR PLAN
M-4	ROOF PLAN
M-5	CONTROL DIAGRAMS
M-6	DETAILS
M-7	TITLE 24 DOCUMENTATION

REVISION	DATE	DESCRIPTION	INITIAL

ISSUE FOR PROGRESS REVIEW	DATE:
ISSUE FOR PLAN CHECK	
ISSUE FOR PERMIT	
ISSUE FOR BID	4/4/96
ISSUE FOR CONSTRUCTION	

SEAL:

REGISTERED PROFESSIONAL ENGINEER JOSEPH ANGELL No. M 25561 MECHANICAL STATE OF CALIFORNIA

CONSULTANT:
MECHANICAL DESIGN STUDIO
375 FREMONT ST., STE. 250
SAN FRANCISCO, CA 94105
TEL. (415) 284-0114
FAX (415) 284-0118

INTERACTIVE RESOURCES
ARCHITECTURE • PLANNING • ENGINEERING
117 PARK PLACE
POINT RICHMOND
CALIFORNIA 94801
(510) 236-7435
(FAX.) 232-5325

PROJECT:
STUDENT UNION

Diablo Valley College
321 Golf Club Road
Pleasant Hill, CA. 94523

Contra Costa Community College District

STAMP:

LS GR 4-17-96

APPL. NUMBER:

KEY PLAN:

10/3/97

SHEET TITLE:
SCHEDULES LEGEND, AND DRAWING INDEX

SCALE	AS NOTED
PROJ. NO.	A94087.04

PREPARATION AND REVIEW

PURPOSE	PERSONAL/INITIAL	DATE
DRAWN BY		
PROJ. MGR.		
PEER REVIEW		

SHEET NUMBER:
M-1

NUMBER: OF:

TODD DOSCH
Nov 1 97

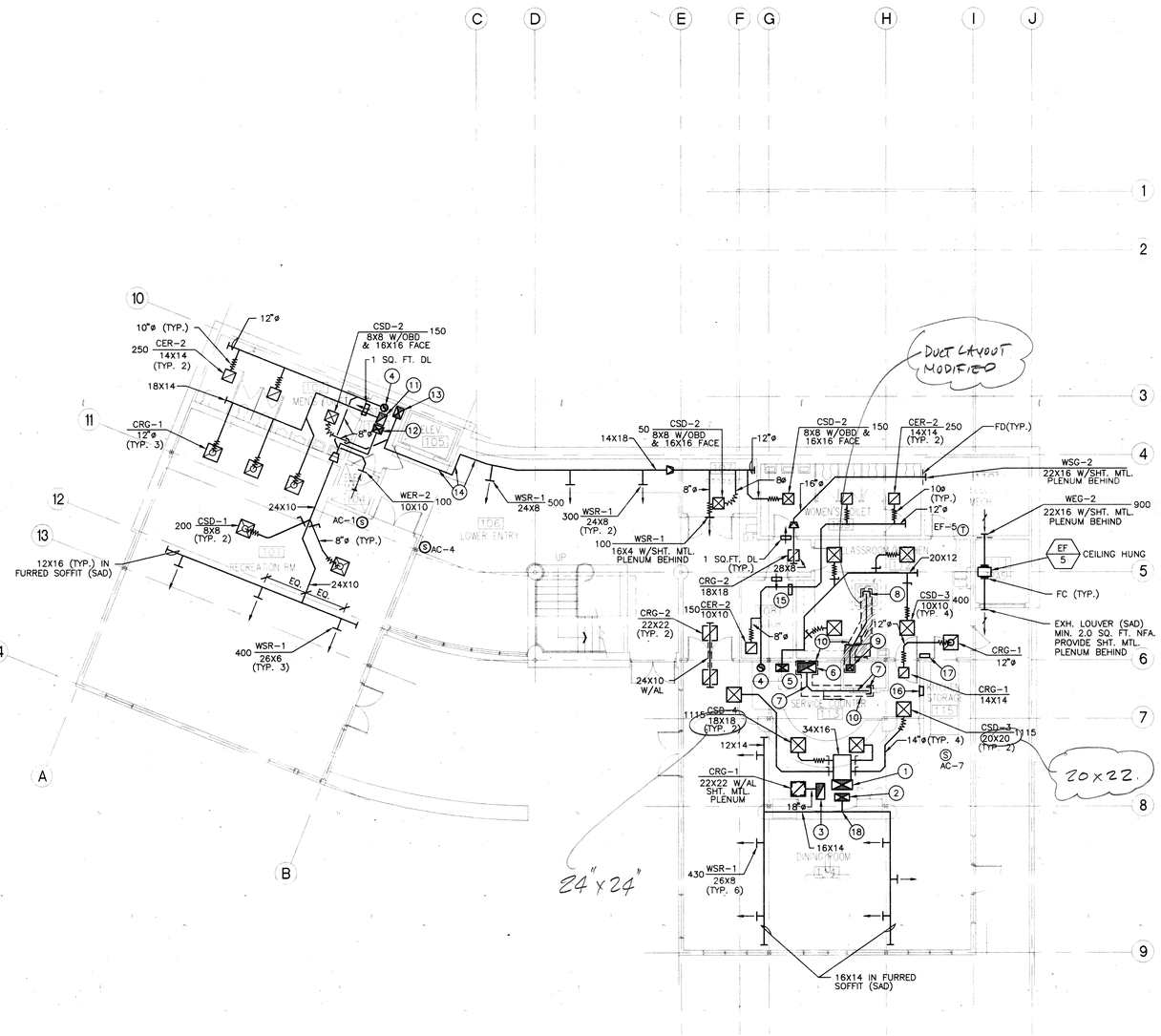

1 FIRST FLOOR PLAN – MECHANICAL
SCALE: 1/8"=1'-0"

SHEET NOTES:

1. 34 x 16 MAKE-UP AIR DUCT W/ AL UP TO SECOND FLOOR ABOVE.
2. 28 x 14 SUPPLY AIR DUCT UP TO SECOND FLOOR ABOVE.
3. 24 x 14 RETURN AIR UP TO SECOND FLOOR ABOVE.
4. 12 DIAM EXHAUST AIR DUCT UP TO SECOND FLOOR ABOVE.
5. 20 X 12 SUPPLY AIR DUCT UP TO SECOND FLOOR ABOVE.
6. 30 X 16 GREASE EXHAUST AIR DUCT UP TO SECOND FLOOR ABOVE AND 26 X 14 DUCT DOWN TO KITCHEN EXHAUST HOOD BENEATH (SKD). COORDINATE EXACT SIZE AND LOCATION OF EXHAUST DROP WITH HOOD CONNECTION COLLAR. PROVIDE WELDED CONNECTION TO HOOD CONNECTION COLLAR. CUT OPENING IN HOOD AND WELD CONNECTION COLLAR TO HOOD IF SHIPPED LOOSE. (SKD).
7. 12 X 8 EXHAUST AIR DUCT TO PIZZA OVEN HOOD. PROVIDE 45 DEG UPWARD CONNECTION TO 30 X 16 GREASE EXHAUST RISER.
8. CONNECT TO KITCHEN EXHAUST HOOD BENEATH (SKD). COORDINATE EXACT SIZE AND LOCATION OF EXHAUST DROP WITH HOOD CONNECTION COLLAR. PROVIDE WELDED CONNECTION TO HOOD CONNECTION COLLAR. CUT OPENING IN HOOD AND WELD CONNECTION COLLAR TO HOOD IF SHIPPED LOOSE. (SKD).
9. 16 X 8 GREASE EXHAUST AIR DUCT UP TO SECOND FLOOR ABOVE.
10. FIRE RATED DUCT WRAP DIVISION 7 AROUND ALL GREASE EXHAUST FROM TOP OF HOOD CONNECTION TO VERTICAL FIRE RATED GYPSUM BOARD SHAFT. INSTALL PER MANUCTURER'S RECOMMENDATIONS.
11. 18 X 14 RETURN AIR DUCT UP TO SECOND FLOOR ABOVE.
12. 18 X 14 SUPPLY AIR DUCT UP TO SECOND FLOOR ABOVE.
13. 18 X 14 SUPPLY AIR DUCT UP TO SECOND FLOOR ABOVE.
14. 14 X 18 SUPPLY AIR DUCT IN GYPSUM BOARD SOFFIT (SAD).
15. HVAC TEMPERATURE CONTROL PANELS "A" AND "B" IN JANITOR ROOM 108. (2 PANELS TOTAL).
16. MAKE-UP AIR UNIT MAU-1 RECESSED MOUNTED CONTROL PANEL.
17. MAKE-UP AIR UNIT MAU-2 SURFACED MOUNTED CONTROL PANEL.
18. USE TWO SQUARE THROAT ELBOWS OF EQUAL SIZE AT AC-7 "T" FITTING.

GENERAL NOTES

1. SEE ARCHITECTURAL REFLECTED CEILING PLANS AND DETAILS FOR EXACT LOCATIONS OF CEILING AND WALL AIR OUTLETS.
2. PROVIDE TURNING VANES IN ALL SUPPLY AND RETURN 90 DEG RECTANGULAR ELBOWS.
3. PIPES, DUCTS AND CONDUITS SHALL BE SUPPORTED AND BRACED PER OSHPD ANCHORAGE PRE-APPROVAL NO. R-0010, THE SMACNA "GUIDELINES FOR SEISMIC RESTRAINTS OF MECHANICAL SYSTEMS AND PLUMBING PIPING SYSTEMS".

AS BUILT
CORRECTIONS BY KAF
CONTRACT NO. TODD DOUGLAS
DATE NOV 1 97

REVISION	DATE	DESCRIPTION	INITIAL

ISSUE FOR PROGRESS REVIEW	DATE:
ISSUE FOR PLAN CHECK	
ISSUE FOR PERMIT	
ISSUE FOR BID	4/2/96
ISSUE FOR CONSTRUCTION	

SEAL:

REGISTERED PROFESSIONAL ENGINEER — ROBERT ARCHER — No. M 26561 — Exp 6-30-96 — MECHANICAL — STATE OF CALIFORNIA

CONSULTANT:

MECHANICAL DESIGN STUDIO
375 FREMONT ST., STE. 250
SAN FRANCISCO, CA 94105
TEL. (415) 284-0114
FAX (415) 284-0118

INTERACTIVE RESOURCES
ARCHITECTURE • PLANNING • ENGINEERING
117 PARK PLACE
POINT RICHMOND
CALIFORNIA 94801
(510) 236-7435
(FAX.) 232-5325

PROJECT:

STUDENT UNION

Diablo Valley College
321 Golf Club Road
Pleasant Hill, CA. 94523

Contra Costa Community College District

STAMP:

APPL. NUMBER:

KEY PLAN:

10/31/97

SHEET TITLE:

FIRST FLOOR PLAN

SCALE	AS NOTED
PROJ. NO.	A94087.04

PREPARATION AND REVIEW		
PURPOSE	PERSONAL/INITIAL	DATE
DRAWN BY		
PROJ. MGR.		
PEER REVIEW		

SHEET NUMBER:

M-2

NUMBER: OF:

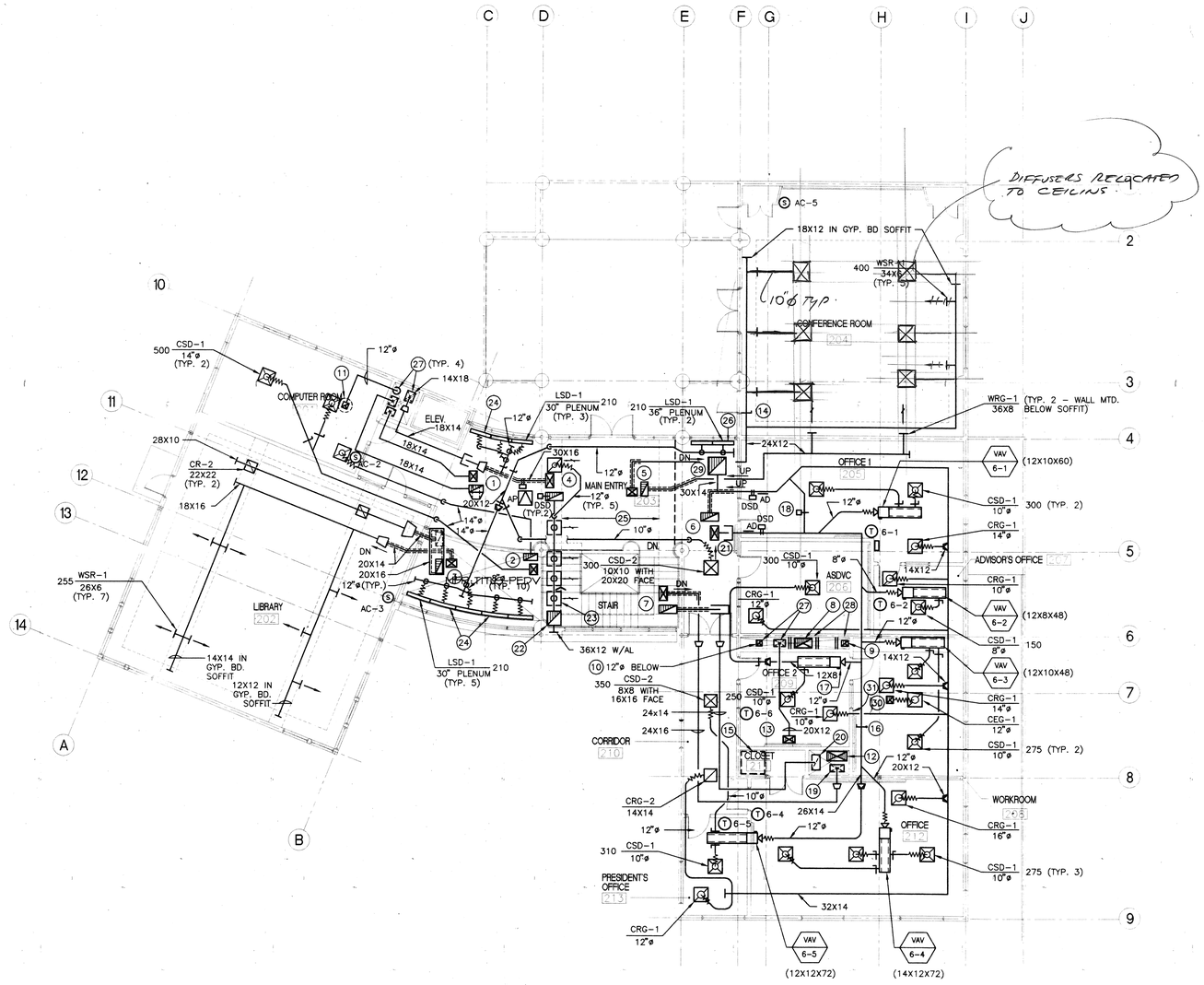

1 SECOND FLOOR PLAN - MECHANICAL

SCALE: 1/8"=1'-0"

SHEET NOTES

1. 18X14 SUPPLY AND 18X14 RETURN DUCTS UP W/AL AND TV'S AT ELBOWS TO AC-1 ON ROOF ABOVE
2. 18X10 SUPPLY AND 24X8 RETURN DUCTS W/AL AND TV'S AT ELBOWS UP TO AC-2 ON ROOF ABOVE
3. 20X14 SUPPLY AND 20X14 RETURN DUCTS UP TO W/AL AND TV'S AT ELBOWS AC-3 ON ROOF ABOVE
4. 30X16 SUPPLY AND 36X12 RETURN DUCTS UP W/AL AND TV'S AT ELBOWS TO AC-4 ON ROOF ABOVE
5. 24X12 SUPPLY AND 24X12 RETURN DUCTS UP W/AL AND TV'S AT ELBOWS TO AC-5 ON ROOF ABOVE
6. 28X14 SUPPLY AND 32X14 RETURN DUCTS UP W/AL AND TV'S AT ELBOWS TO AC-6 ON ROOF ABOVE
7. 28X14 SUPPLY AND 28X12 RETURN DUCTS W/AL AND TV'S AT ELBOWS UP TO AC-7 ON ROOF ABOVE
8. 30X16 GREASE EXHAUST AIR DUCT UP TO EF-1 ON ROOF ABOVE
9. 16X8 GREASE EXHAUST AIR DUCT UP TO EF-2 ON ROOF ABOVE
10. 10X10 EXHAUST AIR DUCT UP TO EF-3 ON ROOF ABOVE
11. 10X10 EXHAUST AIR DUCT UP TO EF-4 ON ROOF ABOVE
12. 28X19 MAKE-UP AIR DUCT W/AL UP TO MAU-1 ON ROOF ABOVE AND 34X16 W/AL TO FIRST FLOOR BELOW. PROVIDE UL LISTED FIRE STOPPING AT FLOOR PENETRATION.
13. 20X12 MAKE-UP AIR DUCT W/AL UP TO MAU-2 ON ROOF ABOVE
14. VOLUME DAMPER WITH CONCEALED DAMPER REGULATOR IN BOTTOM OF SOFFIT. PROVIDE WITH OFF-WHITE FINISH.
15. ROOF ACCESS LADDER, KEEP CLEAR.
16. AC-6 DUCT STATIC PRESSURE SENSOR.
17. VAV BOX 6-6 WITH 12X10X48 ACOUSTICALLY LINED PLENUM.
18. AC-6 24X14 BY-PASS DUCT WITH CONTROL DAMPER.
19. 28X14 SUPPLY AIR DUCT DOWN TO FIRST FLOOR. PROVIDE UL LISTED FIRE STOPPING AT FLOOR PENETRATION.
20. 24X14 RETURN AIR DUCT DOWN TO FIRST FLOOR. PROVIDE UL LISTED FIRE STOPPING AT FLOOR PENETRATION.
21. OFF-SET AC-6 LINED SUPPLY DUCT TO MISS LIGHT FIXTURE BENEATH.
22. 34X34 RELIEF AIR DUCT UP W/AL TO RELIEF HOOD ON ROOF.
23. 24X6 RETURN AIR DUCT WITH OPENING IN LIGHT COVE AT CEILING (SAD). MOUNT DUCT AS LOW AS POSSIBLE AND PAINT INTERIOR FLAT BLACK. TYPICAL OF 5.
24. LINEAR SLOT DIFFUSER TO BE CONTINUOUS ALONG SEGMENTED EXTERIOR WINDOW. PROVIDE MITERED CORNERS SO THAT DIFFUSER PARALLELS EACH WINDOW SEGMENT.
25. HIGH DOMED CEILING (SAD). LOCATE DUCTS AS HIGH AS POSSIBLE IN THIS AREA.
26. LINEAR SLOT DIFFUSER IN HIGH CEILING POCKET (SAD)
27. NOT USED.
28. GREASE EXHAUST DUCTS DOWN INSIDE RATED SHAFT DUCT ENCLOSURE. SAD FOR EXTENT OF RATED ENCLOSURE. PROVIDE SPECIFIED RATED DUCT WRAP BEYOND.
29. 30X30 RELIEF AIR DUCT UP TO RELIEF DUCT ON ROOF.
30. 12X12 WITH ACOUSTICAL LINER UP TO EF-6 ON ROOF ABOVE.
31. EXHAUST FAN EF-6 SWITCH LOCATION AND VAV BOX 6-3 THERMOSTAT LOCATION.

GENERAL NOTES

1. SEE ARCHITECTURAL REFLECTED CEILING PLANS AND DETAILS FOR EXACT LOCATIONS OF CEILING AND WALL AIR OUTLETS.
2. PROVIDE TURNING VANES IN ALL SUPPLY AND RETURN 90 DEG RECTANGULAR ELBOWS.
3. PIPES, DUCTS AND CONDUITS SHALL BE SUPPORTED AND BRACED PER OSHPD ANCHORAGE PRE-APPROVAL NO. R-0010, THE SMACNA "GUIDELINES FOR SEISMIC RESTRAINTS OF MECHANICAL SYSTEMS AND PLUMBING PIPING SYSTEMS."

VAV TERMINAL BOX SCHEDULE

MFR: TITUS MODEL DESV(2)

CODE	CFM SETTING MAX.	CFM SETTING MIN.	DUCT CONNECTION INLET (INCHES)	DUCT CONNECTION OUTLET (INCHES)	ΔP_s(3)	REMARKS
VAV-6-1	600	145	8	12 X 10	0.12	
VAV-6-2	150	45	4	12 X 8	0.014	
VAV 6-3	550	145	8	12 X 10	0.10	
VAV 6-4	825	175	9	14 X 12-1/2	0.15	
VAV 6-5	660	145	8	12 X 10	0.14	
VAV 6-6	550	145	8	12 X 10	0.10	

NOTES:
1. PROVIDE SHOP FABRICATED PLENUMS WITH MINIMUM SIZES SHOWN ON PLANS (WIDTH X HEIGHT X LENGTH GIVEN IN INCHES).
2. PROVIDE WITH ANDOVER TCX 852 CONTROLLER AND BELIMO LM 24 DAMPER ACUATOR. SEE FLOOR PLANS FOR RIGHT OR LEFT HAND CONTROLS AND CONTROL DRAWINGS FOR ADDITIONAL REQUIREMENTS.
3. STATIC PRESSURE DROPS ARE FOR DAMPER BOX ONLY (EXCLUDES ATTENUATOR AND MULTIPLE OUTLET CREDITS) AT MAXIMUM AIR FLOWS LISTED.

AS BUILT
CORRECTIONS BY HF TODD DOUGLAS
CONTRACT NO.
DATE Nov 1 97

REVISION	DATE	DESCRIPTION	INITIAL

ISSUE FOR PROGRESS REVIEW	DATE:
ISSUE FOR PLAN CHECK	
ISSUE FOR PERMIT	
ISSUE FOR BID	4/4/96
ISSUE FOR CONSTRUCTION	

SEAL:

REGISTERED PROFESSIONAL ENGINEER GREGORY RAMEL HANSEN No. M 26561 MECHANICAL STATE OF CALIFORNIA

CONSULTANT:

MECHANICAL DESIGN STUDIO
375 FREMONT ST., STE. 250
SAN FRANCISCO, CA 94105
TEL. (415) 284-0114
FAX (415) 284-0118

INTERACTIVE RESOURCES
ARCHITECTURE • PLANNING • ENGINEERING
117 PARK PLACE
POINT RICHMOND
CALIFORNIA 94801
(510) 236-7435
(FAX) 232-5325

PROJECT:

STUDENT UNION

Diablo Valley College
321 Golf Club Road
Pleasant Hill, CA. 94523

Contra Costa Community College District

STAMP:

APPL. NUMBER:

KEY PLAN:

SHEET TITLE:

SECOND FLOOR PLAN

SCALE	AS NOTED
PROJ. NO.	A94087.04

PREPARATION AND REVIEW		
PURPOSE	PERSONAL/INITIAL	DATE
DRAWN BY		
PROJ. MGR.		
PEER REVIEW		

SHEET NUMBER:

M-3

NUMBER: OF:

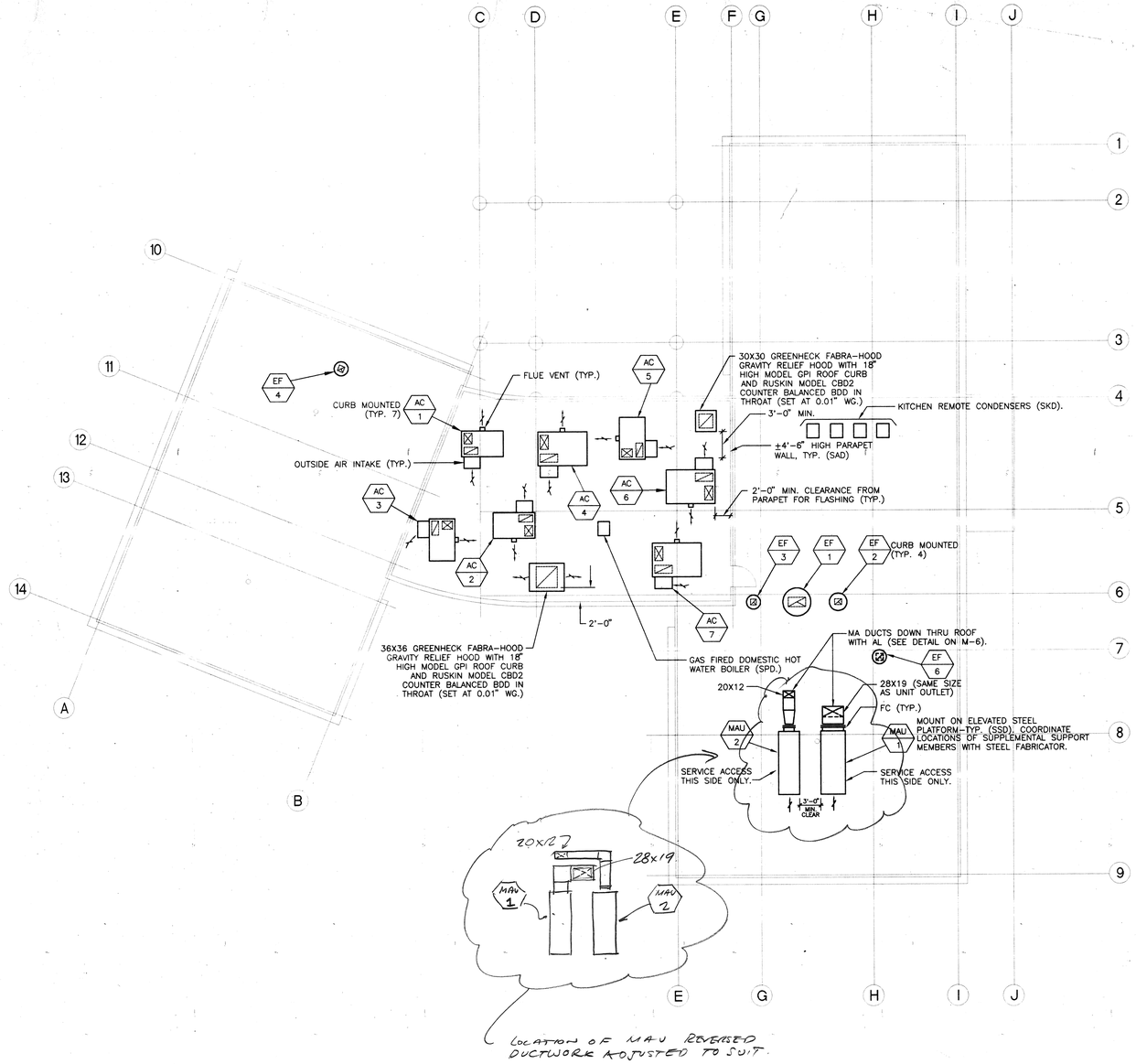

1 ROOF PLAN – MECHANICAL
SCALE: 1/8"=1'-0"

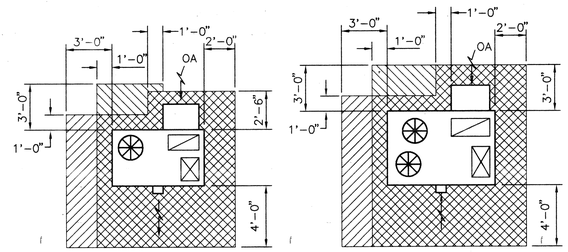

3 THRU 5 TON

7-1/2 AND 10 TON

ALTERNATE CLEARANCE "A"

ALTERNATE CLEARANCE "B"

2 AC UNIT SERVICE CLEARANCES
SCALE: 1/4"=1'-0"

GENERAL NOTES:

1. MAINTAIN 10'-0" MINIMUM CODE CLEARANCE FROM ALL OUTSIDE AIR INTAKES TO ANY ADJACENT FLUE VENT, EXHAUST FAN OUTLET OR PLUMBING VENT.
2. MAINTAIN ELECTRICAL CODE AND UNIT MANUFACTURER'S SERVICE CLEARANCES OF ALL ROOF MOUNTED EQUIPMENT. SEE DETAIL 2 THIS SHEET FOR CLEARANCES AT AC UNITS.
3. SEE DRAWING M-6 FOR EQUIPMENT MOUNTING AND BRACING DETAILS.
4. SEE ARCHITECTURAL DRAWINGS FOR FLASHING DETAILS.

AS BUILT
CORRECTIONS BY ### TODD DOUGLAS
CONTRACT NO.
DATE NOV 1 97

REVISION	DATE	DESCRIPTION	INITIAL

ISSUE FOR PROGRESS REVIEW	DATE:
ISSUE FOR PLAN CHECK	
ISSUE FOR PERMIT	
ISSUE FOR BID	4/16/96
ISSUE FOR CONSTRUCTION	

SEAL:

REGISTERED PROFESSIONAL ENGINEER DANIEL ANGRAD No. M 29561 EXP. 6/30/97 MECHANICAL STATE OF CALIFORNIA

CONSULTANT:

MECHANICAL DESIGN STUDIO
375 FREMONT ST., STE. 250
SAN FRANCISCO, CA 94105
TEL. (415) 284-0114
FAX (415) 284-0118

INTERACTIVE RESOURCES
ARCHITECTURE • PLANNING • ENGINEERING
117 PARK PLACE
POINT RICHMOND
CALIFORNIA 94801
(510) 236-7435
(FAX.) 232-5325

PROJECT:

STUDENT UNION

Diablo Valley College
321 Golf Club Road
Pleasant Hill, CA. 94523

Contra Costa Community College District

STAMP:

APPROVED
APR 6 4 39
GR
4-17-96

APPL. NUMBER:

KEY PLAN:

LICENSED ARCHITECT RAFAEL D. DIAZ No. C-17195 CIVIL STATE OF CALIFORNIA
10/9/97

SHEET TITLE:

ROOF PLAN

SCALE	AS NOTED
PROJ. NO.	A94087.04

PREPARATION AND REVIEW		
PURPOSE	PERSONAL/INITIAL	DATE
DRAWN BY		
PROJ. MGR.		
PEER REVIEW		

SHEET NUMBER:

M-4

NUMBER: OF:

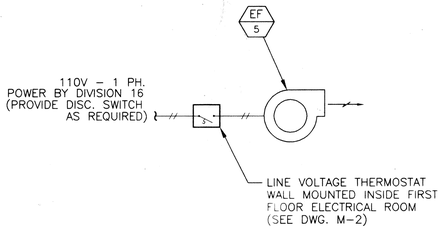

7 / M-5 ELECTRICAL ROOM EXHAUST CONTROL DIAGRAM
NO SCALE

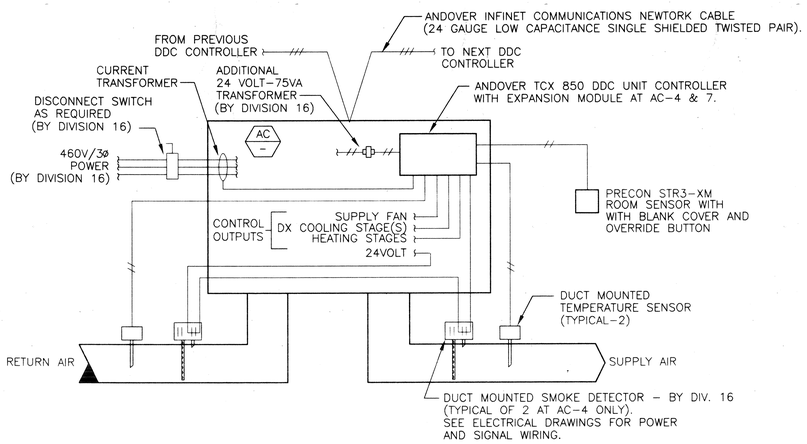

4 / M-5 AC UNIT AC-1,2,3,4,5 AND 7 CONTROL DIAGRAM
NO SCALE

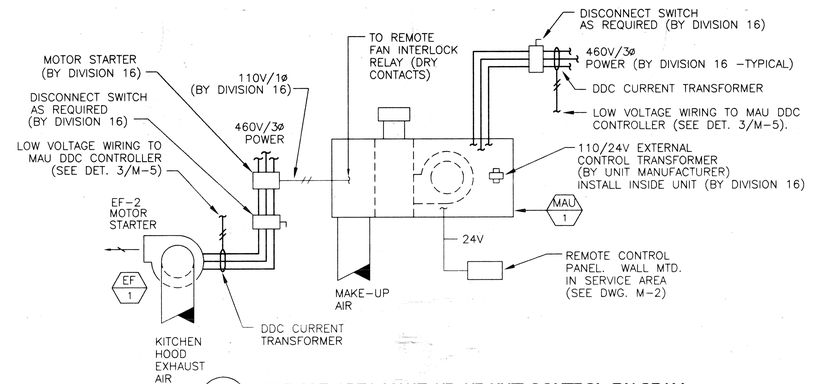

1 / M-5 SERVICE AREA MAKE-UP AIR UNIT CONTROL DIAGRAM
NO SCALE

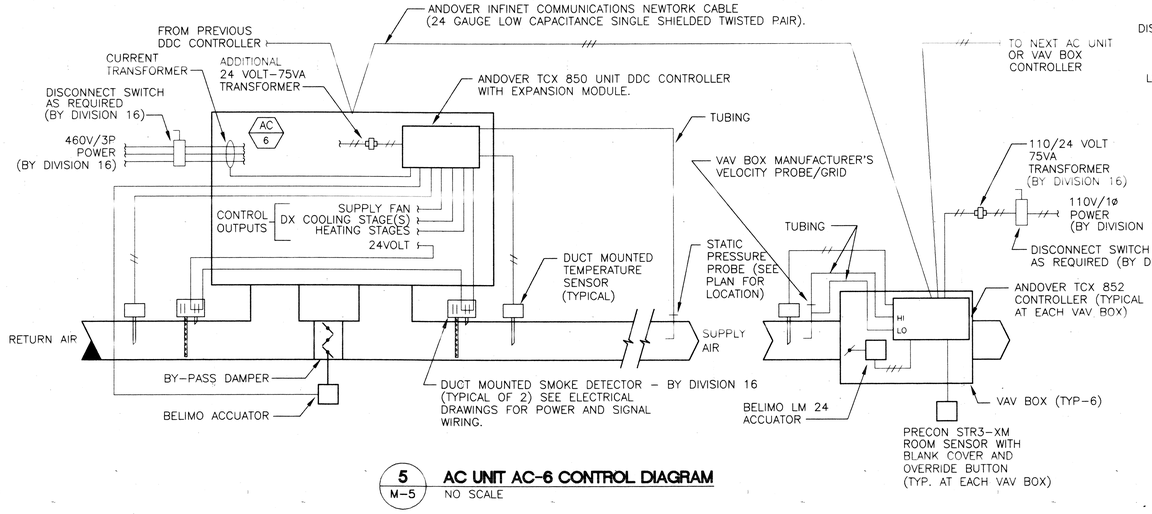

5 / M-5 AC UNIT AC-6 CONTROL DIAGRAM
NO SCALE

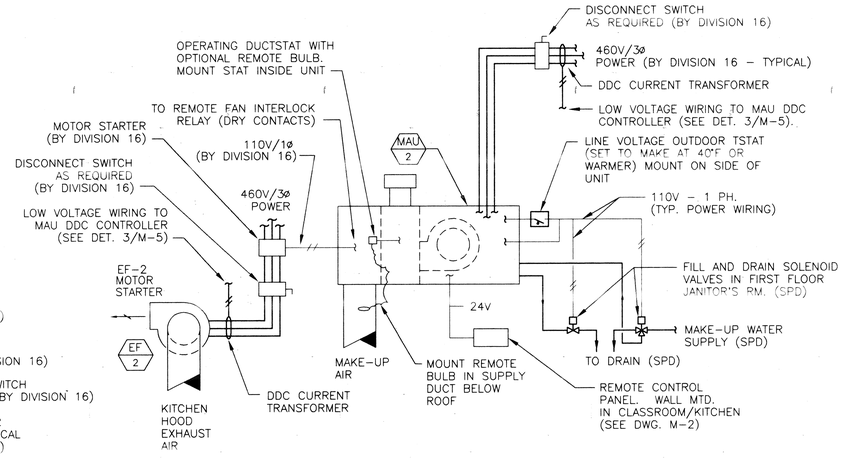

2 / M-5 CLASSROOM/KITCHEN MAKE-UP AIR UNIT CONTROL DIAGRAM
NO SCALE

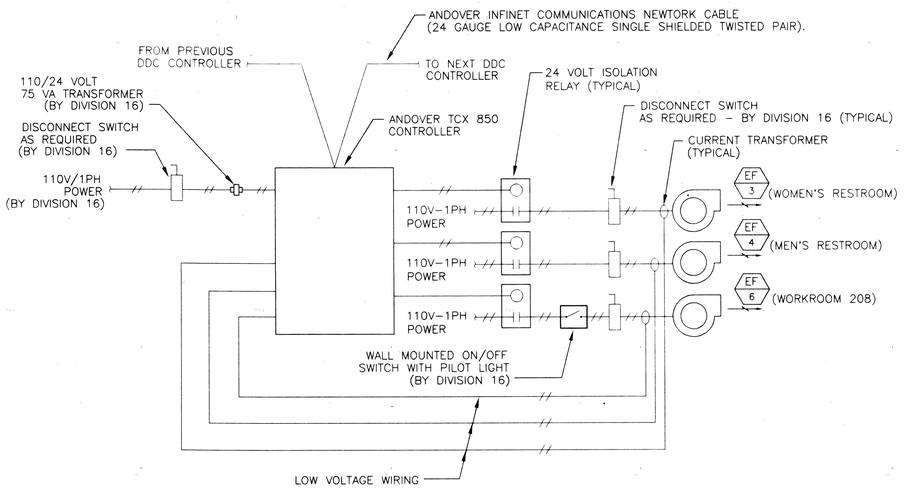

NOTE: ENCLOSE DDC CONTROLLER WITH RELAYS INSIDE NEMA 1 PANEL
(LABEL: PANEL "B" EF–3, 4 & 6 CONTROL). SEE M–2 FOR LOCATION.

6 / M-5 EF-3, 4 AND 6 CONTROL DIAGRAM
NO SCALE

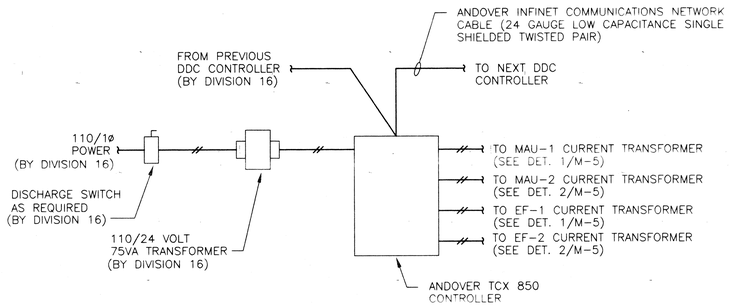

NOTE: ENCLOSE INSIDE NEMA 1 PANEL (LABEL: PANEL "A" MAU–1 & 2
AND EF–1 & 2 MONITORING). SEE M–2 FOR LOCATION.

3 / M-5 MAU DDC CONTROL DIAGRAM
NO SCALE

SHEET NOTES:

1. GENERAL CONTRACTOR TO HAVE FINAL RESPONSIBILITY FOR DETERMINING THE SCOPE OF WORK BETWEEN DIVISION 15 AND DIVISION 16, INCLUDING WHICH IS TO FURNISH, INSTALL AND WIRE THE VARIOUS CONTROL COMPONENTS SHOWN ON THE DRAWINGS, DESCRIBED OR INFERRED IN THE SPECIFICATIONS.
2. POINT OF CONNECTION TO THE EXISTING CAMPUS ENERGY MANAGEMENT COMMUNICATIONS NETWORK FOR DIVISION 15 WILL BE INSIDE ELECTRICAL/MECHANICAL ROOM 110 IN THE NEW STUDENT UNION. ALL ANDOVER DDC CONTROLLERS TO BE CONNECTED TOGETHER VIA THE COMMUNICATIONS NETWORK CABLE IN EITHER DIASY CHAIN OR STAR FASSION. (WHICHEVER IS COMPATIBLE TO THE ANDOVER CONTROLS SYSTEM).

AS BUILT
CORRECTIONS BY TODD/DOUGH
CONTRACT NO.
DATE NOV 1 97

REVISION	DATE	DESCRIPTION	INITIAL

ISSUE FOR PROGRESS REVIEW	DATE:
ISSUE FOR PLAN CHECK	
ISSUE FOR PERMIT	
ISSUE FOR BID	4/5/96
ISSUE FOR CONSTRUCTION	

SEAL:

CONSULTANT:
MECHANICAL
DESIGN STUDIO
375 FREMONT ST., STE. 250
SAN FRANCISCO, CA 94105
TEL. (415) 284-0114
FAX (415) 284-0118

INTERACTIVE
RESOURCES
ARCHITECTURE • PLANNING • ENGINEERING
117 PARK PLACE
POINT RICHMOND
CALIFORNIA 94801
(510) 236-7435
(FAX.) 232-5325

PROJECT:
STUDENT UNION

Diablo Valley College
321 Golf Club Road
Pleasant Hill, CA. 94523

Contra Costa
Community College District

STAMP:

APPL. NUMBER:

KEY PLAN:

SHEET TITLE:
CONTROL DIAGRAMS

SCALE	AS NOTED
PROJ. NO.	A94087.04

PREPARATION AND REVIEW		
PURPOSE	PERSONAL/INITIAL	DATE
DRAWN BY		
PROJ. MGR.		
PEER REVIEW		

SHEET NUMBER:
M-5
NUMBER: OF:

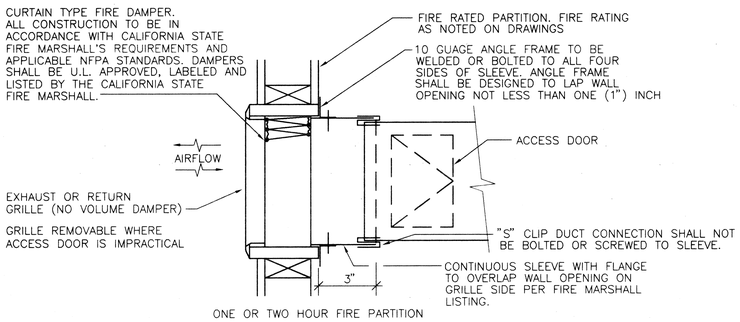

7 M-6 **SIDEWALL FIRE DAMPER**
NOT TO SCALE

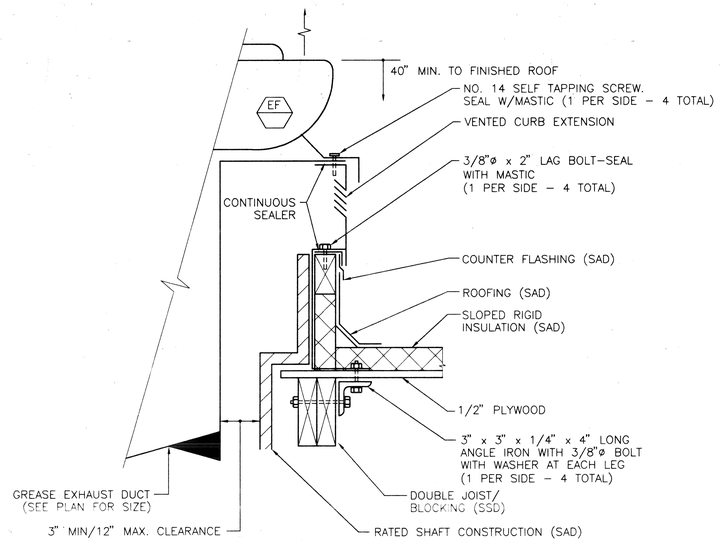

4 M-6 **EF-1 AND 2 CURB DETAIL**
NOT TO SCALE

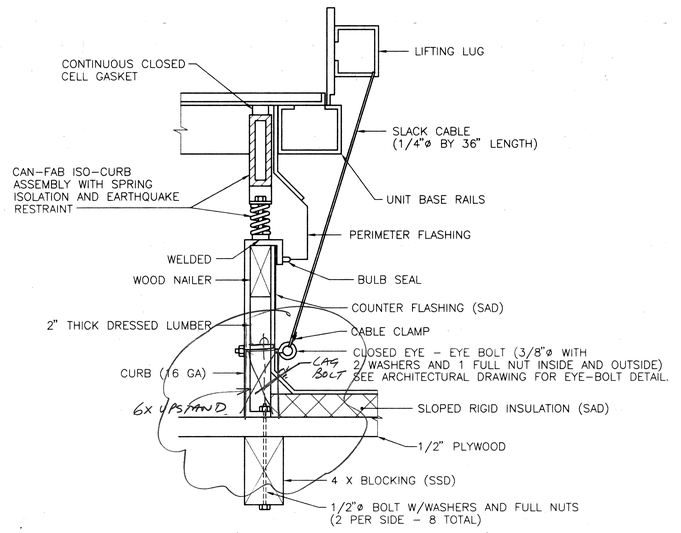

1 M-6 **AC-4, 6, AND 7 CURB DETAIL**
NOT TO SCALE

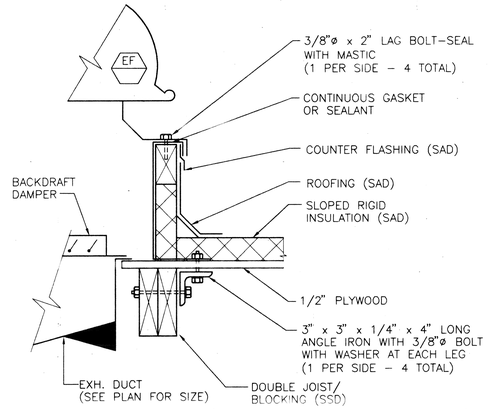

5 M-6 **EF-3 AND 4 CURB DETAIL**
NOT TO SCALE

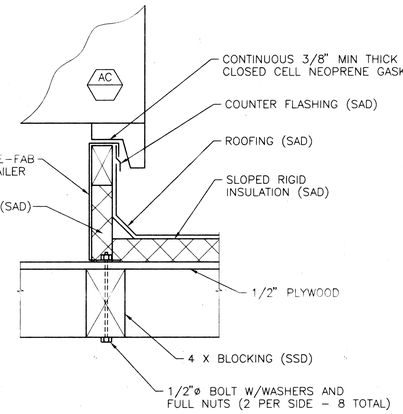

2 M-6 **AC-1, 2, 3, AND 5 CURB DETAIL**
NOT TO SCALE

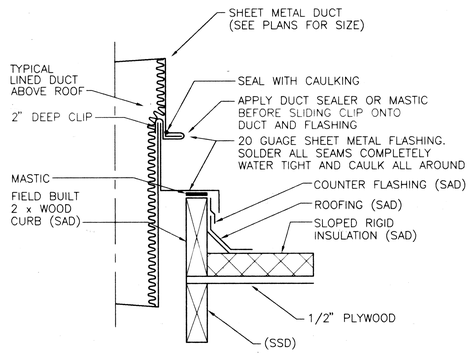

6 M-6 **DUCT ROOF PENETRATION DETAIL**
NOT TO SCALE

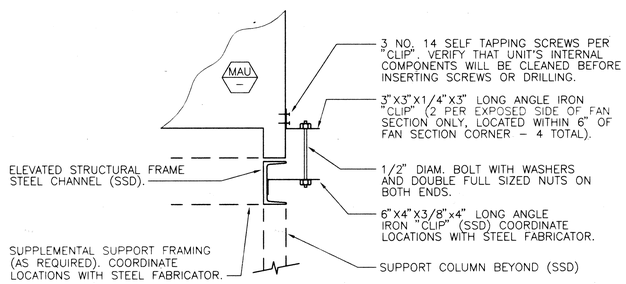

3 M-6 **MAU-1 AND 2 SUPPORT DETAIL**
NOT TO SCALE

AS BUILT
CORRECTIONS BY Todd Dousens
CONTRACT NO.
DATE 10/1/97

REVISION	DATE	DESCRIPTION	INITIAL

ISSUE FOR PROGRESS REVIEW	DATE:
ISSUE FOR PLAN CHECK	
ISSUE FOR PERMIT	
ISSUE FOR BID	4/4/96
ISSUE FOR CONSTRUCTION	

SEAL:

CONSULTANT:
MECHANICAL DESIGN STUDIO
375 FREMONT ST., STE. 250
SAN FRANCISCO, CA 94105
TEL. (415) 284-0114
FAX (415) 284-0118

INTERACTIVE RESOURCES
ARCHITECTURE • PLANNING • ENGINEERING
117 PARK PLACE
POINT RICHMOND
CALIFORNIA 94801
(510) 236-7435
(FAX) 232-5325

PROJECT:
STUDENT UNION

Diablo Valley College
321 Golf Club Road
Pleasant Hill, CA. 94523

Contra Costa Community College District

STAMP:
4@ us GR 4-17-96

APPL. NUMBER:

KEY PLAN:
10/31/97

SHEET TITLE:
DETAILS

SCALE	AS NOTED
PROJ. NO.	A94087.04

PREPARATION AND REVIEW		
PURPOSE	PERSONAL/INITIAL	DATE
DRAWN BY		
PROJ. MGR.		
PEER REVIEW		

SHEET NUMBER:
M-6
NUMBER: OF:

ENVELOPE MANDATORY MEASURES

- [ ] INSTALLED INSULATING MATERIAL SHALL HAVE BEEN CERTIFIED BY THE MANUFACTURER TO COMPLY WITH THE CALIFORNIA QUALITY STANDARDS FOR INSULATING MATERIAL.
- [ ] ALL INSULATING MATERIALS SHALL BE INSTALLED IN COMPLIANCE WITH THE FLAME SPREAD RATING AND SMOKE DENSITY REQUIREMENTS OF SECTIONS 1712 AND 1713 OF THE UBC.
- [ ] ALL EXTERIOR JOINTS AND OPENINGS IN THE BUILDING ENVELOPE THAT ARE OBSERVABLE SOURCES OF LEAKAGE SHALL BE CAULKED, GASKETED, WEATHER-STRIPPED OR OTHERWISE SEALED.
- [ ] SITE CONSTRUCTED DOORS, WINDOWS AND SKYLIGHTS SHALL BE CAULKED BETWEEN THE UNIT AND THE BUILDING, AND SHALL BE WEATHER-STRIPPED (EXCEPT FOR UNFRAMED GLASS DOORS AND FIRE DOORS).
- [ ] MANUFACTURED DOORS AND WINDOWS INSTALLED SHALL HAVE AIR INFILTRATION RATES CERTIFIED BY THE MANUFACTURER PER SECTION 116(a)1. MANUFACTURED FENESTRATION PRODUCTS MUST BE LABELED FOR U-VALVE ACCORDING TO NFRC PROCEDURES.
- [ ] DEMISING WALL INSULATION SHALL BE INSTALLED IN ALL OPAQUE PORTIONS OF FRAMED WALLS (EXCEPT DOORS).

MECHANICAL MANDATORY MEASURES

EQUIPMENT AND SYSTEMS EFFICIENCY

- [x] ANY APPLIANCE FOR WHICH THERE IS A CALIFORNIA STANDARD ESTABLISHED IN THE APPLIANCE EFFICIENCY STANDARDS MAY BE INSTALLED ONLY IF THE MANUFACTURER HAS CERTIFIED TO THE COMMISSION, AS SPECIFIED IN THOSE REGULATIONS, THAT THE APPLIANCE COMPLIES WITH THE APPLICABLE STANDARD FOR THAT APPLIANCE. INCLUDED ARE CENTRAL AIR CONDITIONERS WITH A COOLING CAPACITY LESS THAN 135,000 Btu/hr, AND DUCT FURNACES SHALL HAVE BEEN CERTIFIED TO THE CALIFORNIA ENERGY COMMISION BY ITS MANUFACTURER TO COMPLY WITH THE APPLIANCE EFFICIENCY STANDARDS.
- [ ] AIR HANDLING DUCT SYSTEMS SHALL BE CONSTRUCTED, INSTALLED SEALED, AND INSULATED AS PROVIDED IN CHAPTER 10 OF THE UNIFORM MECHANICAL CODE.

CONTROLS

- [ ] EACH SPACE CONDITIONING SYSTEM SERVING BUILDING TYPES SUCH AS OFFICES AND MANUFACTURING FACILITIES (AND ALL OTHERS NOT EXPLICITLY EXEMPT FROM THE REQUIREMENTS OF SECTION 112(d) SHALL BE INSTALLED WITH AN AUTOMATIC TIME SWITCH WITH AN ACCESSIBLE MANUAL OVERRIDE THAT ALLOWS OPERATION OF THE SYSTEM DURING OFF-HOURS FOR UP TO 4 HOURS. THE TIME SWITCH SHALL BE CAPABLE OF PROGRAMMING DIFFERENT SCHEDULES FOR WEEKENDS; THAT PREVENT THE LOSS OF THE DEVICE'S PROGRAM AND TIME SETTING FOR AT LEAST 10 HOURS IF POWER IS INTERRUPTED.
- [ ] EACH SPACE CONDITIONING SYSTEM SHALL BE INSTALLED WITH CONTROLS THAT TEMPORARILY RESTART AND TEMPORARILY OPERATE THE SYSTEM AS REQUIRED TO MAINTAIN A SETBACK HEATING THERMOSTAT SETPOINT.

  EACH SPACE CONDITIONING ZONE SHALL BE CONTROLLED BY AN INDIVIDUAL THERMOSTATIC CONTROL THAT RESPONDS TO TEMPERATURE WITHIN THE ZONE. WHERE USED TO CONTROL HEATING, THE CONTROL SHALL BE ADJUSTABLE DOWN TO 55°F OR LOWER. FOR COOLING, THE CONTROL SHALL BE ADJUSTABLE UP TO 85°F OF HIGHER. WHERE USED TO CONTROL BOTH HEATING AND COOLING, THE CONTROL SHALL BE CAPABLE OF PROVIDING A DEAD BAND OF AT LEAST 5°F WITHIN WHICH THE SUPPLY OF HEATING AND COOLING IS SHUT OFF OR REDUCED TO A MINIMUM.
- [ ] THEROMSTATS SHALL HAVE NUMERIC SETPOINTS IN °F.
- [ ] THERMOSTATS SHALL HAVE ADJUSTABLE SETPOINT STOPS ACCESSIBLE ONLY TO AUTHORIZED PERSONNEL.

SERVICE WATER HEATING SYSTEMS

- [ ] THE FOLLOWING SERVICE WATER HEATING SYSTEMS AND EQUIPMENT MAY BE INSTALLED ONLY IF THE MANUFACTURER HAS CERTIFIED THAT THE EQUIPMENT MEETS OR EXCEEDS ALL APPLICABLE EFFICIENCY REQUIREMENTS LISTED IN THE APPLIANCE EFFICIENCY REGULATIONS OR APPENDIX B, TABLE B-14.
- [ ] UNFIRED SERVICE WATER HEATER STORAGE TANKS SHALL HAVE EITHER EXTERNAL INSULATION WITH AN INSTALLED R-VALUE OF AT LEAST R-12; INTERNAL AND EXTERNAL INSULATION WITH A COMBINED R-VALUE OF AT LEAST R-16; OR SUFFICIENT INSULATION SO THAT THE HEAT LOSS OF THE TANK SURFACE BASED ON AN 80 F WATER-AIR TEMPERATURE DIFFERENCE SHALL BE LESS THAN 6. Btu/hr/sf
- [ ] IF A CIRCULATING HOT WATER SYSTEM IS INSTALLED, IT SHALL HAVE A CONTROL CAPABLE OF AUTOMATICALLY TURNING OFF THE CIRCULATING PUMP(S) WHEN HOT WATER IS NOT REQUIRED.
- [ ] LAVATORIES IN RESTROOMS OF PUBLIC FACILITIES SHALL BE EQUIPPED WITH OUTLET DEVICES THAT LIMIT THE FLOW OF HOT WATER TO A MAXIMUM OF 0.5 GALLONS PER MINUTE.

CERTIFICATE OF COMPLIANCE (part 2 of 3) MECH-1 page 17 of 44

Project Name: STUDENT UNION, Diablo Valley College | Date: 9/22/1995

Documentation: FARBER ENERGY DESIGN | COMPLY 24 User 2624

SYSTEM FEATURES (Note to Field)

Zone Name	AC-1/ Nonres Zone	AC-4/ Nonres Zone
Time Control		
Setback Control	Heating	Heating
# of Isolation Zones	n/a	n/a
HP Thermostat	n/a	n/a
Electric Heat	n/a	n/a
Fan Control	Constant Volume	Constant Volume
VAV Min Position	n/a	n/a
Simul. Heat/Cool	n/a	n/a
Heat Supply Reset	Constant Temp	Constant Temp
Cool Supply Reset	Constant Temp	Constant Temp
Ventilation		
OA Damper Control		
Economizer Type	No Economizer	Fixed Enth (Integrated)
Outdoor Air CFM	206	1123
Heat Equip Type	Gas Furnace	Gas Furnace
Make & Model No.	CARRIER 48DJE005* 4t	CARRIER 48DJD012531 ECN
Cool Equip Type	DX	DX
Make and Model		

Zone Name	AC-7/ Nonres Zone	MAU-1/ Nonres Zone
Time Control		
Setback Control	Heating	Heating
# of Isolation Zones	n/a	n/a
HP Thermostat	n/a	n/a
Electric Heat	n/a	n/a
Fan Control	Constant Volume	Constant Volume
VAV Min Position	n/a	n/a
Simul. Heat/Cool	n/a	n/a
Heat Supply Reset	Constant Temp	Constant Temp
Cool Supply Reset	Constant Temp	Constant Temp
Ventilation		
OA Damper Control		
Economizer Type	Fixed Enth (Integrated)	No Economizer
Outdoor Air CFM	676	5665
Heat Equip Type	Gas Furnace	Gas Furnace
Make & Model No.	CARRIER 48DJD008531 ECN	ARES 225 Outdoor
Cool Equip Type	DX	DX
Make and Model		4460 CFM Evap. Cooler

Zone Name	MAU-2/ Nonres Zone	AC-2/ Nonres Zone
Time Control		
Setback Control	Heating	Heating
# of Isolation Zones	n/a	n/a
HP Thermostat	n/a	n/a
Electric Heat	n/a	n/a
Fan Control	Constant Volume	Constant Volume
VAV Min Position	n/a	n/a
Simul. Heat/Cool	n/a	n/a
Heat Supply Reset	Constant Temp	Constant Temp
Cool Supply Reset	Constant Temp	Constant Temp
Ventilation		
OA Damper Control		
Economizer Type	No Economizer	No Economizer
Outdoor Air CFM	1613	50
Heat Equip Type	Gas Furnace	Gas Furnace
Make & Model No.	STERLING RT-10-E-1	CARRIER 48DJE004* 3t
Cool Equip Type	DX	DX
Make and Model	1600 CFM Evap. Cooler	

Zone Name	AC-3/ Nonres Zone	AC-5/ Nonres Zone
Time Control		
Setback Control	Heating	Heating
# of Isolation Zones	n/a	n/a
HP Thermostat	n/a	n/a
Electric Heat	n/a	n/a
Fan Control	Constant Volume	Constant Volume
VAV Min Position	n/a	n/a
Simul. Heat/Cool	n/a	n/a
Heat Supply Reset	Constant Temp	Constant Temp
Cool Supply Reset	Constant Temp	Constant Temp
Ventilation		
OA Damper Control		
Economizer Type	No Economizer	No Economizer
Outdoor Air CFM	194	591
Heat Equip Type	Gas Furnace	Gas Furnace
Make & Model No.	CARRIER 48DJE006* 5t	CARRIER 48DJE006* 5t
Cool Equip Type	DX	DX
Make and Model		

Zone Name	AC-6/ Nonres Zone
Time Control	
Setback Control	Heating
# of Isolation Zones	n/a
HP Thermostat	n/a
Electric Heat	n/a
Fan Control	Constant Volume
VAV Min Position	n/a
Simul. Heat/Cool	n/a
Heat Supply Reset	Constant Temp
Cool Supply Reset	Constant Temp
Ventilation	
OA Damper Control	
Economizer Type	Fixed Enth (Integrated)
Outdoor Air CFM	347
Heat Equip Type	Gas Furnace
Make & Model No.	CARRIER 48DJD008531 ECN
Cool Equip Type	DX
Make and Model	

Code Tables

Time Control	Ventilation	OA Damper
S:Prog Switch	B:Air Balance	A:Auto
O:Occ Sensor	C:OA Cert.	G:Gravity
M:Man Timer	M:OA Measure	
	D:Demand Cont	
	N:Natural	

CERTIFICATE OF COMPLIANCE (part 3 of 3) MECH-1 page 20 of 44

Project Name: STUDENT UNION, Diablo Valley College | Date: 9/22/1995

Documentation: FARBER ENERGY DESIGN | COMPLY 24 User 2624

DUCT INSULATION System Name	Type	Duct Location	Duct Tape Allowed	Insul R-Val	Note to Field
CARRIER 48DJE005* 4t	Heating	Ducts in Attic	Y / N	4.2	
	Cooling	Ducts in Attic	Y / N	4.2	
CARRIER 48DJD012531 ECN	Heating	Ducts in Attic	Y / N	4.2	
	Cooling	Ducts in Attic	Y / N	4.2	
CARRIER 48DJD008531 ECN	Heating	Ducts in Attic	Y / N	4.2	
	Cooling	Ducts in Attic	Y / N	4.2	
ARES 225 Outdoor	Heating	Ducts in Attic	Y / N	4.2	
	Cooling	Ducts in Attic	Y / N	4.2	
STERLING RT-10-E-1	Heating	Ducts in Attic	Y / N	4.2	
	Cooling	Ducts in Attic	Y / N	4.2	
CARRIER 48DJE004* 3t	Heating	Ducts in Attic	Y / N	4.2	
	Cooling	Ducts in Attic	Y / N	4.2	
CARRIER 48DJE006* 5t	Heating	Ducts in Attic	Y / N	4.2	
	Cooling	Ducts in Attic	Y / N	4.2	
CARRIER 48DJE006* 5t	Heating	Ducts in Attic	Y / N	4.2	
	Cooling	Ducts in Attic	Y / N	4.2	
CARRIER 48DJD008531 ECN	Heating	Ducts in Attic	Y / N	4.2	
	Cooling	Ducts in Attic	Y / N	4.2	

PIPE INSULATION System Name	Pipe Type	Insul Required	Note to Field
Domestic Hot Water	________	Y / N	
ARES 225 Outdoor	________	Y / N	
STERLING RT-10-E-1	________	Y / N	

NOTES TO FIELD - For Building Department Use Only

CERTIFICATE OF COMPLIANCE (part 1 of 2) ENV-1 page 3 of 44

Project Name: STUDENT UNION, Diablo Valley College | Date: 9/22/1995
Address: 321 Golf Club Rd.
Pleasant Hill, CA | Building Permit No
Envelope
Designer: Interactive Resources | Checked by / Date
Documentation: FARBER ENERGY DESIGN | COMPLY 24 User 2624

GENERAL INFORMATION
Date of Plans: ________ Building Conditioned Floor Area: 11235 sf
Building Type: Nonresidential Climate Zone: 12

Phase of Construction: ● New Construction O Addition O Alteration

Method of Envelope Compliance: Prescriptive - Overall Envelope

STATEMENT OF COMPLIANCE
This Certificate of Compliance lists the Building features and performance specifications needed to comply with Title 24, Part 6, Chapter 1 and Title 20, Chapter 2, Subchapter 4, Article 1 of the California Code of Regulations. This certificate applies only to Building envelope requirements.

The Principal Envelope Designer hereby certifies that the proposed building design represented in this set of construction documents is consistent with the other compliance forms and worksheets, with the specifications, and with any other calculations submitted with this permit application. The proposed Building has been designed to meet the envelope requirements contained in sections 110, 116 through 118, and 143 or 149 of Title 24, Part 6, Chapter 1.

Please check one:

O I hereby affirm that I am eligible under the provisions of Division 3 of the Business and Professions Code to sign this document as the person responsible for its preparation; and that I am a civil engineer or architect.

O I affirm that I am eligible under the exemption to Division 3 of the Business and Professions Code by Section 5537.2 of the Business and Professions Code to sign this document as the person responsible for its preparation; and that I am a licensed contractor preparing documents for work that I have contracted to perform.

O I affirm that I am eligible under the exemption to Division 3 of the Business and Professions Code by Section ______ of the ____________ Code to sign this document as the person responsible for its preparation; and for the following reason: ______________.

PRINCIPAL ENVELOPE DESIGNER
Interactive Resources
(510) 236-7435
[signature] C-5710
(Signature) (Lic. #) (Date)

ENVELOPE MANDATORY MEASURES
Indicate location on plans of Note Block for Mandatory Measures: M-7

CERTIFICATE OF COMPLIANCE (part 2 of 2) ENV-1 page 4 of 44

Project Name: STUDENT UNION, Diablo Valley College | Date: 9/22/1995

Documentation: FARBER ENERGY DESIGN | COMPLY 24 User 2624

OPAQUE SURFACES Assembly Name	Const Type	Location/Comments	Note to Field
R-19 Ext. Wall	Wood	WHERE TILE OR METAL FINISH OCCURS.	
2.5" EIFS (R-9.63) Wall	Wood	FIRST FLOOR EIFS WALLS.	
Floor w/ R-19	Wood	FLOOR ABOVE ELECT./MECH. ROOM	
R-16.92 Roof(inv.ave.U)	None	ROOF R-VALUE BASED ON AVE. ASSEMBLY U-VALUE	
2.5" EIFS + R-19 Wall	Wood	SECOND FLOOR EIFS WALLS.	
R-11 Demising Wall	Wood	WALLS FACING ELECT./MECH. ROOM	
Hollow Metal Door	None		

FENESTRATION Orient	Panes	Frame Type	Exterior Shade	OH	Glazing Type
Left (N)	2	Metal	None	N	2-Pane Tint (NR DftMtl)
Left (NE)	2	Metal	None	N	2-Pane Tint (NR DftMtl)
Back (E)	2	Metal	None	N	2-Pane Tint (NR DftMtl)
Back (E)	2	Metal	None	N	2-Pane Tint (NR DftMtl)
Back (SE)	2	Metal	None	N	2-Pane Tint (NR DftMtl)
Right (S)	2	Metal	None	N	2-Pane Tint (NR DftMtl)
Right (SW)	2	Metal	None	N	2-Pane Tint (NR DftMtl)
Front (W)	2	Metal	None	N	2-Pane Tint (NR DftMtl)
Front (W)	2	Metal	None	N	2-Pane Tint (NR DftMtl)
Front (NW)	2	Metal	None	N	2-Pane Tint (NR DftMtl)

CERTIFICATE OF COMPLIANCE (part 1 of 3) MECH-1 page 16 of 44

Project Name: STUDENT UNION, Diablo Valley College | Date: 9/22/1995
Address: 321 Golf Club Rd.
Pleasant Hill, CA | Building Permit No
Mechanical
Designer: Mechanical Design Studio | Checked by / Date
Documentation: FARBER ENERGY DESIGN | COMPLY 24 User 2624

GENERAL INFORMATION
Date of Plans: ________ Building Conditioned Floor Area: 11235 sf
Building Type: Nonresidential Climate Zone: 12

Phase of Construction: ● New Construction O Addition O Alteration

Method of Mechanical Compliance: Prescriptive
Proof of Envelope Compliance: O Previous Permit ● Compliance Attached

STATEMENT OF COMPLIANCE
This Certificate of Compliance lists the Building features and performance specifications needed to comply with Title 24, Part 6, Chapter 1 and Title 20, Chapter 2, Subchapter 4, Article 1 of the California Code of Regulations. This certificate applies only to Building mechanical requirements.

The Principal Mechanical Designer hereby certifies that the proposed building design represented in this set of construction documents is consistent with the other compliance forms and worksheets, with the specifications, and with any other calculations submitted with this permit application. The proposed Building has been designed to meet the mechanical requirements contained in sections 110 through 115, 120 through 124, 140 through 142,144 and 145.

Please check one:

● I hereby affirm that I am eligible under the provisions of Division 3 of the Business and Professions Code to sign this document as the person responsible for its preparation; and that I am a civil engineer mechanical engineer or architect.

O I affirm that I am eligible under the exemption to Division 3 of the Business and Professions Code by Section 5537.2 of the Business and Professions Code to sign this document as the person responsible for its preparation; and that I am a licensed contractor preparing documents for work that I have contracted to perform.

O I affirm that I am eligible under the exemption to Division 3 of the Business and Professions Code by Section ______ of the ____________ Code to sign this document as the person responsible for its preparation; and for the following reason: ______________.

PRINCIPAL MECHANICAL DESIGNER
Mechanical Design Studio
(415) 284-0114
[signature] M26561 10/2/95
(Signature) (Lic. #) (Date)

MECHANICAL MANDATORY MEASURES
Indicate location on plans of Note Block for Mandatory Measures: M-7

AS BUILT
CORRECTIONS BY TODD DOUGLAS
CONTRACT NO. ______
DATE Nov 1 97

REVISION	DATE	DESCRIPTION	INITIAL

	DATE:
ISSUE FOR PROGRESS REVIEW	
ISSUE FOR PLAN CHECK	ORS 10/9/95
ISSUE FOR PERMIT	
ISSUE FOR BID	4/4/96
ISSUE FOR CONSTRUCTION	

SEAL: REGISTERED PROFESSIONAL ENGINEER DOREL ANGHEL No. M 26561 Exp. 6/98 MECHANICAL STATE OF CALIFORNIA

CONSULTANT:
MECHANICAL DESIGN STUDIO
375 FREMONT ST., STE. 250
SAN FRANCISCO, CA 94105
TEL. (415) 284-0114
FAX (415) 284-0118

INTERACTIVE RESOURCES
ARCHITECTURE • PLANNING • ENGINEERING
117 PARK PLACE
POINT RICHMOND
CALIFORNIA 94801
(510) 236-7435
(FAX.) 232-5325

PROJECT:
STUDENT UNION

Diablo Valley College
321 Golf Club Road
Pleasant Hill, CA. 94523

Contra Costa Community College District

STAMP: GR 4-17-96

APPL. NUMBER:

KEY PLAN: 10/31/97

SHEET TITLE:
TITLE 24 DOCUMENTATION

SCALE	NONE	
PROJ. NO.	A94087.04	
PREPARATION AND REVIEW		
PURPOSE	PERSONAL/INITIAL	DATE
DRAWN BY		
PROJ. MGR.		
PEER REVIEW		

SHEET NUMBER:
M-7

NUMBER: OF:

65

FIXTURE SCHEDULE

TYPE	MANUFACTURER AND CATALOG NUMBER	LAMP QUANTITY AND TYPE	DESCRIPTION	MTG DETAIL
A	DAYBRITE #2DG232-RS-KSH3E	2 - F032 T8 277V	2' X 4' RECESSED TYPE FLUORESCENT FIXTURE WITH KSH-3E LENS FOR T-BAR CEILING	1/E2.5, 4/E2.5
B	DAYBRITE #2DG332-RS-KSH3E	3 - F032 T8 277V	SAME AS TYPE "A" EXCEPT 3-LAMP	1/E2.5, 4/E2.5
C	DAYBRITE #2DG432-RS-KSH3E	4 - F032 T8 277V	SAME AS TYPE "A" EXCEPT 4-LAMP	1/E2.5, 4/E2.5
D	DAYBRITE #2DG432-RS-LEXAN	4 - F032 T8 277V	SAME AS TYPE "C" EXCEPT WITH LEXAN LENS	1/E2.5, 4/E2.5
E	DAYBRITE #2DG432-RS-KSH-3E	4 - F032 T8 277V	SAME AS TYPE "D" EXCEPT FOR GYPSUM BOARD CEILING	1/E2.5, 4/E2.5
F	DAYBRITE #2F232-PP	2 - F032 T8 277V	4-FOOT INDUSTRIAL TYPE FLUORESCENT FIXTURE WITH 25% UPLIGHT	
G	NEOREY 76/2 SERIES	2 - F032 T8 277V	9" RECESSED 2-LAMP STAGGERED PERIMETER FLUORESCENT FIXTURE SYSTEM WITH PARABOLIC BAFFLES. (LENGTH TO FIT)	
H1	LEDALITE 1715-31-PF-277-OC-XX	1-F032T8 TOP 3-F032T8 BOTTOM 277V	PENDANT MOUNTED DIRECT/INDIRECT FIXTURE WITH PARABLADE LENS BOTTOM AND FLAT CLEAR ACRYLIC TOP SEPARATELY SWITCHED	
H2	LEDALITE 1715-X3-XF-277-OC-XX	3 - F032 T8 277V	PENDANT MOUNTED INDIRECT FLUORESCENT FLUORESCENT WITH FLAT CLEAR ACRYLIC LENS TOP	
I	ELLIPTIPAR M204-250T-277	1 - 250W MH 277V	SEMI-RECESSED ADJUSTABLE H.I.D. CEILING MOUNTED FIXTURE WITH CUT-OFF VISOR	2/E2.5
J	CAPRI PL29/120-T462	2 - F26W QUAD 277V	8" DIAMETER FLUORESCENT DOWNLIGHT WITH SPECULAR CLEAR ALZAK REFLECTOR	2/E2.5
K	LIGHTOLIER ADA LUNA 40620	1 - A19 75W 130V	12" INCANDESCENT WALL SCONCE WITH OVERBLOWN OPAL GLASS TOTALLY ENCLOSED	
L	ELLIPTIPAR M-404-250-W-277-XX	1 - 250W MH 277V	ADJUSTABLE WALL MOUNTED H.I.D. FIXTURE WITH ASYMMETRICAL REFLECTOR	
M	DAYBRITE #SS232	2 - F032 T8 277V	STAGGERED STRIP LIGHT	
O	LOUIS POULSEN DKTR-326S-HPF-277-L	3 - F26W QUAD 277V	8" DIA. RECESSED FLUORESCENT DOWNLIGHT WITH POLISHED ALUM. PARABOLIC CONE. PROVIDE WITH DIMMING BALLAST	2/E2.5
P	LOUIS POULSEN DKTS-326S-HPF-277-L	3 -F26W QUAD 277V	8" DIA. SURFACE FLUORESCENT DOWNLIGHT WITH POLISHED ALUM. PARABOLIC CONE PROVIDE WITH DIMMING BALLAST	2/E2.5
Q	STAFF 58XXX SERIES/8461	1 - 150W PAR38 130V	18 FT. INCANDESCENT RECESSED MOUNTED TRACK LIGHTING COMPLETE WITH INSTALLATION HARDWARE, FLANGED, SUPPORTS (6 HEADS)	
R	DAYBRITE HWN 232	2 - F032 T8 277V	1' X 4' WRAPAROUND FLUORESCENT FIXTURE	
S	ALKCO SF 3XX SERIES	- - - 277V	UNDERCABINET FLUORESCENT FIXTURE WITH 45 DEG. BATWING PRISMATIC LENS (LENGTH TO FIT)	
T	NEOREY 88/2	2 - F032 T8 277V	4-FOOT PENDANT MOUNTED DIRECT/INDIRECT FIXTURE WITH PARABOLIC LENS BOTTOM	
U	ARCH'L AREA LTG ALS-178A	1 - 250W HPS 277V	WALL MOUNTED H.I.D. AREA LIGHTING FIXTURE EXTRUDED ALUMINUM HOUSING AND TEMPERED GLASS LENS	
V	CROUSE HINDS VGR 216	1 -200W A19 130V	SURFACE MOUNTED INCANDESCENT FIXTURE WITH GLASS GLOBE AND GUARD	
W	NUTONE PFBW-52WC/GCLK-4AB	5 - 60W A-19 130V	5 DE LUXE BLADE VERANDAH PADDED FAN WITH CANE-INSERTS AND ANT. BRASS LIGHT KIT	
X	DAYBRITE IFS-209G-PC	2 - 9W PL 120V	SURFACE MOUNTED VAPORTIGHT FIXTURE WITH GLASS GLOBE AND GUARD	
Y	DAYBRITE #2SM232-LEXAN	2 - F032 T8 277V	1' X 4' SURFACE MOUNTED FLUORESCENT FIXTURE WITH LEXAN LENS	
⊗	ASTRALITE 3000 XDL-SP1RA-277-V	L.E.D. LAMPS 277V	L.E.D. EXIT LIGHT COMPLETE WITH HARDWARE AND UNIVERSAL ARROWS, 90-MINUTE BATTERY PACK. PENDANT AND/OR CEILING MOUNTED.	
$\otimes_L$	ASTRALITE 3000 XDL-SP1RA-277-V-XXX	L.E.D. LAMPS 277V	SAME AS ABOVE EXCEPT LOW LEVEL VANDAL RESISTANT TYPE	

GENERAL ELECTRICAL NOTES

1) ELECTRICAL CONTRACTOR IS TO PROVIDE LABOR, MATERIALS, TRANSPORTATION, EQUIPMENT, RELATED HAND TOOLS, SPECIAL AND OCCASIONAL SERVICES TO CONSTRUCT AND INSTALL THE COMPLETE ELECTRICAL SYSTEM AS SPECIFIED AND SHOWN ON THE PLANS.

2) MOUNTING HEIGHTS SHOWN (I.E. +48") ARE FROM FINISHED FLOOR TO CENTERLINE OUTLET. ALL MOUNTING HEIGHTS SHALL BE AS SHOWN ON SYMBOL LIST UNLESS OTHERWISE NOTED ON DRAWINGS.

3) BONDING JUMPERS SHALL BE INSTALLED TO INSURE CONTINUITY WHERE CONDUIT CONNECTIONS AT CONCENTRIC KNOCKOUTS ARE USED.

4) PROVIDE GREEN THWN COPPER GROUND WIRE FROM PANELBOARD GROUND BUS TO ALL MECHANICAL EQUIPMENT.

5) THE ELECTRICIAN SHALL CHECK THE TIGHTNESS OF ALL PANELBOARD BUSES AND CIRCUIT BREAKER LUGS. COMPLETELY VACUUM AND CLEAN INTERIOR OF EQUIPMENT PRIOR TO PLACING SERVICE INTO OPERATION.

6) ALL EQUIPMENT SHALL BE U.L. LISTED AND INSTALLED AS PER LISTING OR LABELING (I.E. MAX. FUSE SIZES MEAN FUSE PROTECTION REQUIRED).

7) REFER TO ARCHITECTURAL DRAWINGS FOR ACTUAL LAYOUT OF ALL LIGHTING FIXTURES IN CEILING AND FOR EXACT LOCATION AND ORIENTATION OF ALL OUTLETS. ARCHITECTURAL DRAWINGS SHALL GOVERN IN ANY CASE OF DISCREPANCIES.

8) CONTRACTOR TO COORDINATE ALL NEW WORK WITH EXISTING CONDITIONS.

9) ALL ELECTRICAL CONDUIT AND ELECTRICAL EQUIPMENT SHALL BE BRACED OR ANCHORED TO RESIST HORIZONTAL FORCES AS REQUIRED BY SECTION 2-2312(g) AND TABLE 2-23(j), PART B, TITLE 24, CALIFORNIA ADMINISTRATIVE CODE, PART 2. WHERE ANCHORAGE DETAILS ARE NOT SHOWN ON DRAWINGS THE FIELD INSTALLATION SHALL BE SUBJECT TO THE APPROVAL OF THE STRUCTURAL ENGINEER AND THE ORS FIELD INSPECTOR.

10) COORDINATE EQUIPMENT LOCATIONS AND ELECTRICAL REQUIREMENTS OF ALL EQUIPMENT REQUIRING ELECTRICAL HOOK-UP WITH CONTRACTOR RESPONSIBLE FOR PROVIDING EQUIPMENT AND EQUIPMENT MANUFACTURER DATA SHEETS.

11) FLUORESCENT LIGHT FIXTURES SHALL HAVE CERTIFIED LUMINAIRE/BALLASTS PER STATE OF CALIFORNIA BUILDING ENERGY STANDARDS 2-5314(a).

12) PENETRATIONS OF FIRE RATED WALLS, CEILINGS OR FLOORS SHALL COMPLY WITH U.B.C. REQUIREMENTS. PROVIDE APPROVED U.L. SYSTEM PER 2-4304(e) T24 CBC.

13) ELECTRICAL CONTRACTOR SHALL REVIEW MECHANICAL AND PLUMBING CONTRACT DRAWINGS. VERIFY ALL MECHANICAL EQUIPMENT LOCATIONS, MOTOR SIZES AND PROVIDE WIRING AS REQUIRED BY THE MECHANICAL CONTRACTOR AND MECHANICAL EQUIPMENT SUPPLIERS.

14) RECEPTACLES SHALL NOT BE INSTALLED BACK TO BACK AND SHALL BE SPACED 24" APART.

15) PROVIDE AN ISOLATED GROUND WIRE IN ADDITION TO NORMAL EQUIPMENT GROUND IN ALL COMPUTER DEDICATED CIRCUITS.

16) ALL CONTROL DEVICES TO BE USED BY THE OCCUPANT OF THE ROOM OR AREA SHALL BE INSTALLED AT A MINIMUM OF 36" C/L, TO A MAXIMUM OF 48" C/L FROM THE FINISHED FLOOR, UNLESS OTHERWISE NOTED.

17) ELECTRICAL DRAWINGS ARE DIAGRAMMATIC AND ALTHOUGH THE SIZE AND LOCATIONS OF EQUIPMENT IS SHOWN TO SCALE WHEREVER POSSIBLE, CONTRACTOR SHALL MAKE USE OF MANUFACTURER'S OR OWNER'S DATA AVAILABLE AND/OR VERIFY DATA IN THE FIELD FOR PROVIDING AND INSTALLING CORRECT CABLE SIZE AND LENGTH.

18) A TYPEWRITTEN DIRECTORY SHALL BE MOUNTED BEHIND GLASS OR PLASTIC ON INSIDE OF PANEL DOOR, GIVING CIRCUIT NUMBER AND COMPLETE DESCRIPTION OF ALL OUTLETS CONTROLLED BY EACH CIRCUIT BREAKER.

19) ALL PAVING, CONCRETE WORK, ETC., SHALL BE SAW CUT TO ACCEPT THE NEW CONDUIT INSTALLATION. CONCRETE BEING REPLACED SHALL MATCH THE COLOR AND FINISH OF EXISTING CONCRETE.

20) MOUNT LOW LEVEL EXIT LIGHTS WITH BOTTOM OF FIXTURE AT 8" ABOVE FINISH FLOOR. SEE DETAIL 7 SHEET E2.5. LOW LEVEL EXIT LIGHTS TO COMPLY WITH UL NO. 924.

21) ALL RECEPTACLES AND SWITCHES SHALL BE LABELED ON FRONT OF FACEPLATE AND BACK AT BOX WITH "BROTHERS" LABELING MACHINE, INDICATING THE PANEL AND CIRCUIT NUMBERS. CHARACTERS TO BE 3/8" HIGH MINIMUM.

22) CONTRACTOR SHALL VERIFY AND COORDINATE WITH SCHOOL, ALL UNDERGROUND UTILITIES PRIOR TO INSTALLATION OF NEW WORK.

23) SUBMIT FIRE ALARM SYSTEM SHOP DRAWINGS FOR ORS APPROVAL. NO WORK SHALL BE DONE PRIOR TO ORS APPROVAL.

24) UPON COMPLETION OF THE INSTALLATION OF THE FIRE PROTECTIVE SIGNALING EQUIPMENT, A SATISFACTORY TEST OF THE ENTIRE SYSTEM SHALL BE MADE IN THE PRESENCE OF THE ENFORCING FIRE AGENCY.

25) ALL EQUIPMENT, DEVICES AND ELECTRICAL APPARUTUS MOUNTED OUTDOOR SHALL BE WEATHERPROOF TYPE.

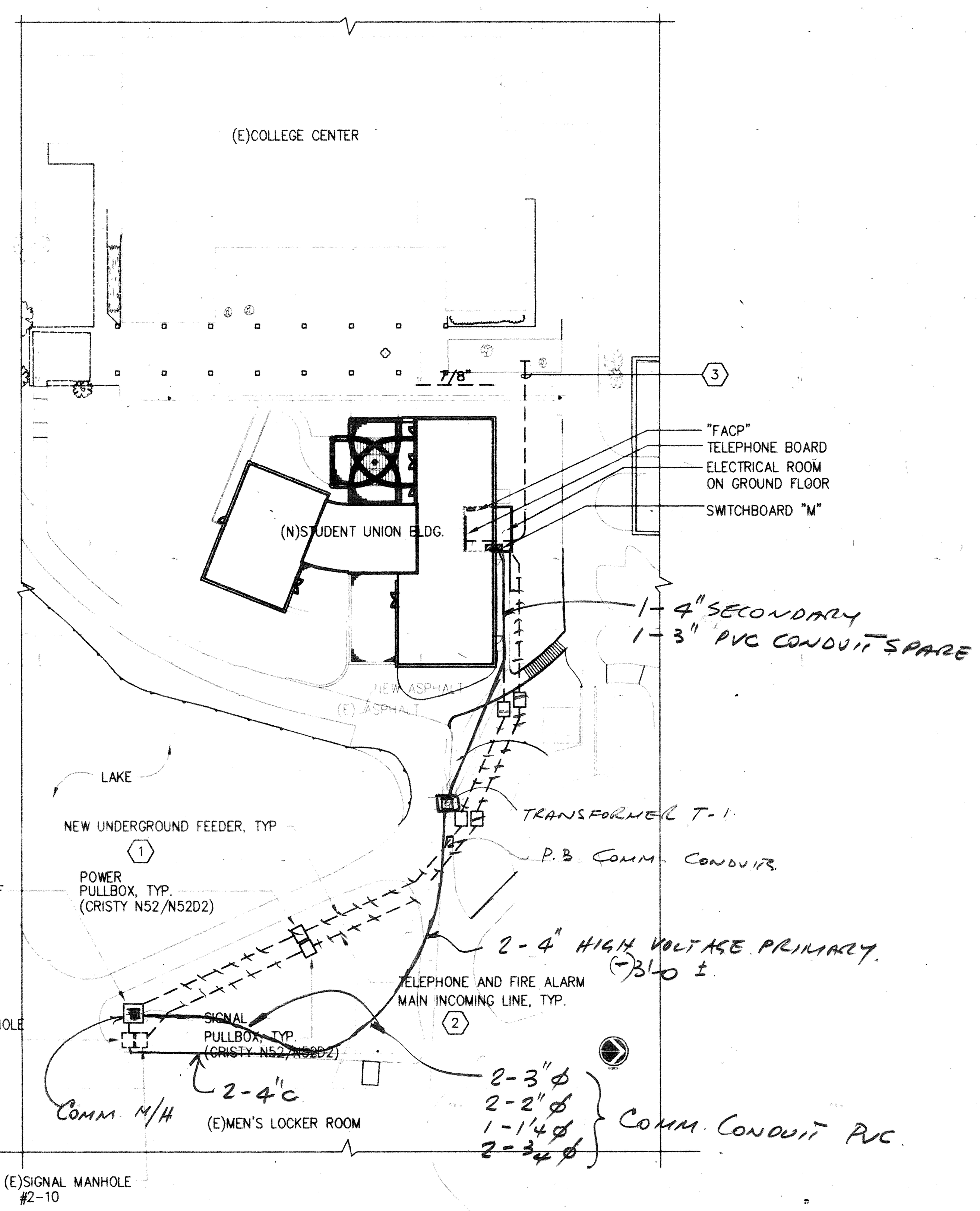

1/E0.1 **SITE PLAN**

SCALE: 1" = 40'-0"

SYMBOL LIST

SYMBOL	DESCRIPTION
	FLUORESCENT LIGHT FIXTURE AND OUTLET - SEE FIXTURE SCHEDULE
	FLUORESCENT OR STRIP LIGHT AND OUTLET - CEILING SURFACE MOUNTED; IN COVE SCHEDULE PENDANT MOUNTED - SEE FIXTURE SCHEDULE
	SURFACE MOUNTED LIGHT FIXTURE - SEE FIXTURE SCHEDULE
	RECESSED DOWNLIGHT, HID OR INCANDESCENT FIXTURE - SEE FIXTURE SCHEDULE
⊗	UNIVERSAL MOUNTING EXIT LIGHT - SEE FIXTURE SCHEDULE
L⊗	LOW-LEVEL EXIT SIGN, WALL OR DOOR MOUNTED - SEE FIXTURE SCHEDULE
S_a	1PST LIGHT SWITCH +48" U.O.N. LETTER INDICATES OUTLET CONTROLLED
S_3	3-WAY LIGHT SWITCH, +48" U.O.N.
S_D	DIMMER SWITCH +48"
S_T	SWITCH WITH THERMAL PROTECTION FOR MOTORS, HORSEPOWER RATED
ALSO	AUTOMATIC LIGHT SHUT OFF
	20A, 125V, 3W GROUNDING TYPE, FOURPLEX RECEPTACLE, +18" U.O.N.
	20A, 125V, 3W GROUNDING TYPE DUPLEX RECEPTACLE, +18" U.O.N.
	DUPLEX RECEPTACLE UP 48" A.F.F.; 6" ABOVE COUNTERTOP ON HORIZONTAL CENTERLINE OF BACKSPLASH AS APPLICABLE
	WEATHERPROOF 20A, 125V, 3W GROUNDING TYPE DUPLEX RECEPTACLE ON ROOF
	SPECIAL PURPOSE RECEPTACLE - SEE PANEL SCHEDULE, +18" A.F.F.
	DUPLEX RECEPTACLE OUTLET IN FLOOR BOX
	HALF-SWITCHED DUPLEX RECEPTACLE + 18" U.O.N.
	GROUND FAULT DUPLEX RECEPTACLE, +48" U.O.N.
	MULTI-OUTLET SURFACE RACEWAY WITH OUTLETS AS INDICATED ON DRAWINGS
M	CEILING MOUNTED MOTION DETECTOR WITH CONTROL UNIT "SENSOR SWITCH WV-160-CU" (PROVIDE OVERIDE SWITCH WHERE SHOWN)
M	WALL MOUNTED SENSOR SWITCH "SENSOR SWITCH WSD-I"
PS	PHOTOSWITCH MOUNTED ON ROOF, TORK 2101
	TELEPHONE/DATA OUTLET, +18" U.O.N., WITH 3/4"MT TO ACCESSIBLE CEILING SPACE
	TELEPHONE/DATA OUTLET IN FLOOR BOX WITH 3/4"MT TO ACCESSIBLE CEILING SPACE
TV	TELEVISION OUTLET, +90" U.O.N. WITH 1"C AND RG-6 TV CABLE TO TV CABINET IN EE ROOM
S	SPEAKER OUTLET + 90" OR CEILING MOUNTED
	CLOCK OUTLET, +90", U.O.N.
J	JUNCTION BOX, CEILING OR WALL MOUNTED - SIZED PER CODE
F	FIRE ALARM MANUAL PULL STATION +48" U.O.N.
S	FIRE ALARM HORN AND STROBE LIGHT +80" U.O.N. CEILING MOUNTED
SD	CEILING MOUNTED SMOKE DETECTOR
DSD	DUCT SMOKE DETECTOR WITH RELAY, AS REQUIRED, FOR SHUT DOWN OF EQUIPMENT
HD	HEAT DETECTOR MOUNTED IN ATTIC SPACE. PROVIDE BLUE DOT ON CEILING BELOW LOCATION IN ATTIC ABOVE
	DISCONNECT SWITCH - FUSED AS REQUIRED, WEATHERPROOF FOR OUTDOORS, HORSEPOWER RATED
⊠	MOTOR CONTROLLER/STARTER
	DISCONNECT SWITCH WITH CONTROLLER - FUSED AS REQUIRED, WEATHERPROOF FOR OUTDOORS, SIZED PER EQUIPMENT MANUFACTURER'S REQUIREMENTS
	MOTOR CONNECTION
	ELECTRICAL PANEL BOARD SURFACE MOUNTED +6'-6" TO TOP
T	TRANSFORMER
→	HOMERUN TO PANELBOARD OR OTHER TERMINATION POINT
	ANY BRANCH CIRCUIT CONDUIT SHALL BE MINIMUM 3/4"C -2#12 UNLESS OTHERWISE NOTED OR INDICATED. FOR A GREATER NUMBER OF #12 WIRES: (———=3/4"C - 3#12) ETC. FOR WIRE SIZES OTHER THAN #12: (——#8 =3#8 IN CODE SIZE CONDUIT) ETC.
— — —	CONDUIT AND CONDUCTORS CONCEALED BELOW FLOOR OR UNDERGROUND, MIN. 3/4"
—T—	INDICATES TELEPHONE CONDUIT RUN
—F—	INDICATES FIRE ALARM CONDUIT RUN
—C—	COMPUTER SYSTEM CONDUIT, 1"MT
—×—×—	SURFACE MOUNTED CONDUIT RUN
	4" CONDUIT PIPE SLEEVE IN CEILING SPACE, U.O.N.
—o	CONDUIT UP
—●	CONDUIT DOWN
A-1,3,5	INDICATES CIRCUITS 1, 3 AND 5 OF PANEL A
(E)	EXISTING
(N)	NEW
MT	EMPTY CONDUIT WITH PULL CORD
U.O.N.	UNLESS OTHERWISE NOTED
WP	WEATHERPROOF
G	GROUND
C	CONDUIT
NL	NIGHT LIGHT, WITH 90-MINUTE EMERGENCY BATTERY PACK
GFI	GROUND FAULT INTERRUPTER
A/2/32	FIXTURE TAG - LETTER DENOTES TYPE, NUMBERS INDICATE LAMP QUANTITY AND WATTAGE
1/E1	REFERS TO DETAIL NO. 1 ON DRAWING E-1
1	SHEET NOTE

SHEET NOTES:

(1) PROVIDE 1 - 3"MT SPARE AND STUBBED OUT AT THE ELECTRICAL ROOM.

(2) PROVIDE 2 - 3" MT FOR TELEPHONE AND COMPUTER SYSTEMS , 2 - 2"MT FOR FIRE ALARM AND "EMS" SYSTEMS.

(3) PROVIDE 1 - 2½"MT TO TELEPHONE SYSTEM. VERIFY EXACT CONNECTION POINT TO SUTDENT ACTIVITES BUILDING WITH CAMPUS ENGINEERING DEPARTMENT.

AS BUILT
CORRECTIONS BY HAF.
CONTRACT NO.
DATE OCT 1 97

REVISION	DATE	DESCRIPTION	INITIAL

ISSUE FOR PROGRESS REVIEW	DATE:
ISSUE FOR PLAN CHECK	
ISSUE FOR PERMIT	
ISSUE FOR BID	4/4/96
ISSUE FOR CONSTRUCTION	

SEAL:

REGISTERED PROFESSIONAL ENGINEER RICHARD A. MADDEN No. E 8626 Exp. 9-30-98 ELECTRICAL STATE OF CALIFORNIA

CONSULTANT:

WHM INCORPORATED
Engineering Consultants
1605 School Street
Moraga, CA 94556
Tel (510)376-2902 • Fax (510)376-2904
94112

INTERACTIVE RESOURCES
ARCHITECTURE • PLANNING • ENGINEERING
117 PARK PLACE
POINT RICHMOND
CALIFORNIA 94801
(510) 236-7435
(FAX.) 232-5325

PROJECT:

STUDENT UNION

Diablo Valley College
321 Golf Club Road
Pleasant Hill, CA. 94523

Contra Costa Community College District

STAMP:

JW LS GR 4-17-96

APPL. NUMBER:

KEY PLAN:

10/3/97

SHEET TITLE:

SYMBOLS LIST NOTES AND SCHEDULE

SCALE	As Shown	
PROJ. NO.	A94087.04	
PREPARATION AND REVIEW		
PURPOSE	PERSONAL/INITIAL	DATE
DRAWN BY	Denggoy	
PROJ. MGR.	JLWe	
PEER REVIEW	XXX	XX/XX/XX

SHEET NUMBER:

E 0.1

NUMBER: OF:

E:/94112/E0.1

07:25 am
04/16/96

PANEL- 1L1 * (10 KAIC)

SERVICE	LTG.	REC.	RES.	MOT.	CB	CKT	CKT	CB	LTG.	REC.	RES.	MOT.	SERVICE
REC.-RECREATION RM/TOILET		0.8			20/1	1	2	20/1	0.8				CEILING FAN/LIGHT
		0.8				3	4		0.4				RECREATION ROOM LIGHTS
		0.8				5	6			1.2			RECEPT ON ROOF
		0.8				7	8			0.4			MUA-2 TEMP CONT ON ROOF
REC.-ENTRY/TOILET/JANITOR		0.6				9	10			0.4			TCP-A/TCP-B JAN. RM.
S P A R E		1.0				11	12			0.2			COMPUTER RM 101
		1.0				13	14						S P A R E
REC.-DINING RM.		0.8				15	16						
		0.8				17	18						
		0.8				19	20						
REC.-CLASSROOM/KITCHEN		0.4				21	22						
		0.8				23	24						
		0.6				25	26						
S P A R E						27	28						
						29	30						
						31	32						
						33	34			0.8			DRINKING FOUNTAIN- CORRIDOR
FACP						35	36			0.8			AUTOMATIC DOOR OPENER 106
ELEV. PIT/LIGHT		0.8				37	38						S P A R E
ELEV. LIGHTS		0.4				39	40			1.0			HEATRACE CABLE JAN. RM
ELEV. CONTROL		0.4				41	42			1.0			HEATRACE CABLE JAN. RM
TOTALS		11.6							1.2	5.8			TOTALS

VOLTS: 120/208V 3PH 4W MTG: SURFACE
TYPE: NQOD SOURCE: SEE RISER DIAGRAM
MAINS: 225A GROUND TOTAL 18.6 KVA

* ALL LIGHT CIRCUITS VIA AUTOMATIC LIGHT SHUT OFF, ALSO

PANEL- 1H1 * (14 KAIC)

SERVICE	LTG.	REC.	RES.	MOT.	CB	CKT	CKT	CB	LTG.	REC.	RES.	MOT.	SERVICE
LTG. - RECREATION AREA	2.2				20/1	1	2	20/1	3.0				LTG. - LIBRARY/COMPUTER RM.
LTG. - RECREATION AREA/TOIL.	3.0					3	4		2.0				LTG. - LIBRARY/COMPUTER RM.
LTG. - LOWER ENTRY/CORR.	1.0					5	6		1.1				LTG. - CORRIDOR
LTG. - LOWER ENTRY/CORR.	0.6					7	8		1.7				LTG. - CORRIDOR
LTG. - EXTERIOR	0.8					9	10		1.8				LTG. - CONFERENCE/OFFICE
LTG. - DINING ROOM	0.8					11	12		2.4				LTG. - OFFICE/ADVISOR
LTG. - DINING ROOM	1.1					13	14		2.1				LTG. - WORKROOM/OFFICE
LTG. - ELECT./KITCHEN/TOILET	1.6					15	16						S P A R E
LTG. - COMPUTER ROOM	1.2					17	18						S P A R E
S P A R E						19	20		0.6				LTG. - EXTERIOR LOBBY
						21	22		0.6				
						23	24		0.6				
						25	26		0.6				
						27	28						S P A R E
						29	30						
						31	32						
						33	34						
LTG. - EXIT LIGHTS	0.2					35	36						
SPACE						37	38						SPACE
						39	40						
						41	42						
TOTALS	12.5								16.5				TOTALS

VOLTS: 277/480V 3PH 4W MTG: SURFACE
TYPE: NEHB SOURCE: SEE RISER DIAGRAM
MAINS: 225A GROUND TOTAL 29.0 KVA

* ALL LIGHT CIRCUITS VIA AUTOMATIC LIGHT SHUT OFF, ALSO EXCEPT EXIT LIGHT CKT #35

PANEL- 2L1 (10 KAIC)

SERVICE	LTG.	REC.	RES.	MOT.	CB	CKT	CKT	CB	LTG.	REC.	RES.	MOT.	SERVICE
REC.-OFFICE/ADVISOR		0.6			20/1	1	2	20/1		0.8			REC.-COMPUTER ROOM
		0.8				3	4			0.8			
		0.8				5	6			0.8			
REC.-OFFICE/ASDVC/ENTRY		0.6				7	8			0.8			
		0.8				9	10			1.0			
MAIN LOBBY		0.6				11	12			0.6			REC.-QUIET ROOM
REC.-CONFERENCE RM./ENTRY		0.8				13	14			0.6			
OFFICE		0.8				15	16			1.0			REC.-QUIET ROOM
		0.8				17	18			1.0			
CONFERENCE RM.		0.6				19	20			0.6			REC.-OFFICE/~~CLUBROOM~~ WORKROOM
REC. - CONF RM COMPUTER		0.8				21	22			0.6			
REC. - CONF RM COMPUTER		0.8				23	24			0.6			
S P A R E						25	26			0.6			
REC. - STAIR		0.2				27	28			0.8			REC.-WORKROOM/CLUBRM.#2
REC. - COMPUTER RM.		0.4				29	30			0.8			
S P A R E						31	32			0.8			
						33	34			0.8			REC.-~~WORKROOM~~ CLUBROOM
						35	36			0.6			REC.-~~WORKROOM~~ CLUBROOM
						37	38			1.0			COPIER 205
						39	40			1.0			COPIER 209
LIGHTS - ON ROOF		0.2				41	42			1.0			COPIER 212
TOTALS		9.6								16.6			TOTALS

VOLTS: 120/208V 3PH 4W MTG: SURFACE
TYPE: NQOD SOURCE: SEE RISER DIAGRAM
MAINS: 225A GROUND TOTAL 26.2 KVA

SPRINKLER CONTROLER

PANEL- K (10 KAIC)

SERVICE	LTG.	REC.	RES.	MOT.	CB	CKT	CKT	CB	LTG.	REC.	RES.	MOT.	SERVICE
~~29 AIR CURTAIN~~				1.1	20/1	1	2	20/1		0.8			ICE MAKER (9)
(11) UNDERCOUNTER REFRIG.		0.4				3	4	20/2		0.3			SOUP WARMER (54)
(12) UNDERCOUNTER REFRIG.		0.5				5	6						—
(48) CASH REGISTER		0.8				7	8	20/1		0.3			UNDERCOUNTER REFRIG. (53)
(22) DISHWASHER		1.6			20/2	9	10			0.5			SANDWICH TABLE (55)
—						11	12			0.6			REC. - KITCHEN
(3) HOOD LIGHTS		0.2			20/1	13	14			0.2			SERVICE COUNTER HOOD LTS. (39)
REC. - KITCHEN		0.6				15	16			0.1			ROTARY SPIT (32)
REC. - KITCHEN		0.4				17	18			1.1			EXPRESSO GRINDER (43)
~~S P A R E~~ ANSUL FAN CONTROL						19	20	20/2		2.0			EXPRESSOR MACHINE (44)
						21	22						—
(24) PIZZA OVEN		1.8				23	24	20/1		0.5			REFRIGERATOR (33)
S P A R E						25	26			1.1			EXPRESSO GRINDER (43)
						27	28						S P A R E
						29	30						
						31	32					0.5	EF-5 RM 111
						33	34					0.8	EF-3 ON ROOF
(58) REFRIG. COND. ON ROOF				0.9		35	36					0.8	EF-4 ON ROOF
(59) REFRIG. COND. ON ROOF				0.9		37	38			0.8			WH-1 ON ROOF
(60) REFRIG. COND. ON ROOF				1.2		39	40	20/2				1.6	CP-1 ~~ON ROOF~~ IN JAN. RM.
(61) REFRIG. COND. ON ROOF				1.2		41	42						—
TOTALS		6.3		5.3						7.3		3.7	TOTALS

VOLTS: 120/208V,3ø,4W MTG: SURFACE
TYPE: NQOD SOURCE: SEE RISER DIAGRAM
MAINS: 225A GROUND TOTAL 22.6 KVA

SEE KITCHEN EQUIPMENT SCHEDULE ON SHEET E2.3

PANEL- 2L2 (10 KAIC)

SERVICE	LTG.	REC.	RES.	MOT.	CB	CKT	CKT	CB	LTG.	REC.	RES.	MOT.	SERVICE
S P A R E					20/1	1	2	20/1			0.5		VAV CONTROL TRANSFORMERS
						3	4				0.15		MAU-1 & 2 CONTROL TRANSFORMERS
						5	6				0.5		A/C UNITS CONTROL TRANSFORMERS
						7	8						S P A R E
						9	10						
						11	12						
						13	14						
						15	16						
						17	18						
						19	20						
						21	22						
						23	24						
						25	26						
						27	28						
						29	30						
EF-6 ON ROOF 1/6 HP		0.6				31	32			0.4			TEL. BOARD EE ROOM
CEILING PROJECTOR RM 204		0.8				33	34			0.4			COMPUTER RACK EE ROOM
AUTOMATIC DOOR OPENER 203		0.8				35	36			0.4			COMPUTER RACK EE ROOM
PROJECTOR RM 204		0.8				37	38			1.0			COPIER 205
PROJ. SCREEN RM 204		0.6				39	40			1.0			COPIER 209
S P A R E						41	42			1.0			COPIER 212
TOTALS		3.6								4.2	1.15		TOTALS

VOLTS: 120/208V 3PH 4W MTG: SURFACE
TYPE: NQOD SOURCE: SEE RISER DIAGRAM
MAINS: 225A GROUND TOTAL 8.95 KVA

SWITCHBOARD 'M' (22 KAIC)

SERVICE	LTG.	REC.	RES.	MOT.	CB	CKT	CKT	CB	LTG.	REC.	RES.	MOT.	SERVICE
~~AC-1~~ MAU-1				6.4	20/3	1	2	15/3				4.0	EF-1
~~AC-2~~ MAU-2				6.0	20/3	3	4	15/3				1.5	EF-2
AC-~~3~~ 5				9.8	30/3	5	6						~~SPACE~~ AC-3
AC-4				19	40/3	7	8	20/3				2.9	~~MUA-1~~ AC-6
AC-~~5~~ 2				9.8	30/3	9	10	20/3				1.5	~~MUA-2~~ AC-1
~~AC-6~~ SPARE				12.7	30/3	11	12	30/3				12.7	AC-7
S P A R E					225/3	13	14						S P A R E
					125/3	15	16						
					125/3	17	18						
PANEL "1H1"	29.0				225/3	19	20	175/3		112.5			TRANSF. "T1" 112.5 KVA
TOTALS	29.0			63.7		350A				112.5		22.6	TOTALS

VOLTS: 277/480V,3ø,4W MTG: SURFACE
TYPE: POW-R-LINE SOURCE: SEE RISER DIAGRAM
MAINS: 350AMP MAIN BREAKER GROUND TOTAL 227.8 KVA

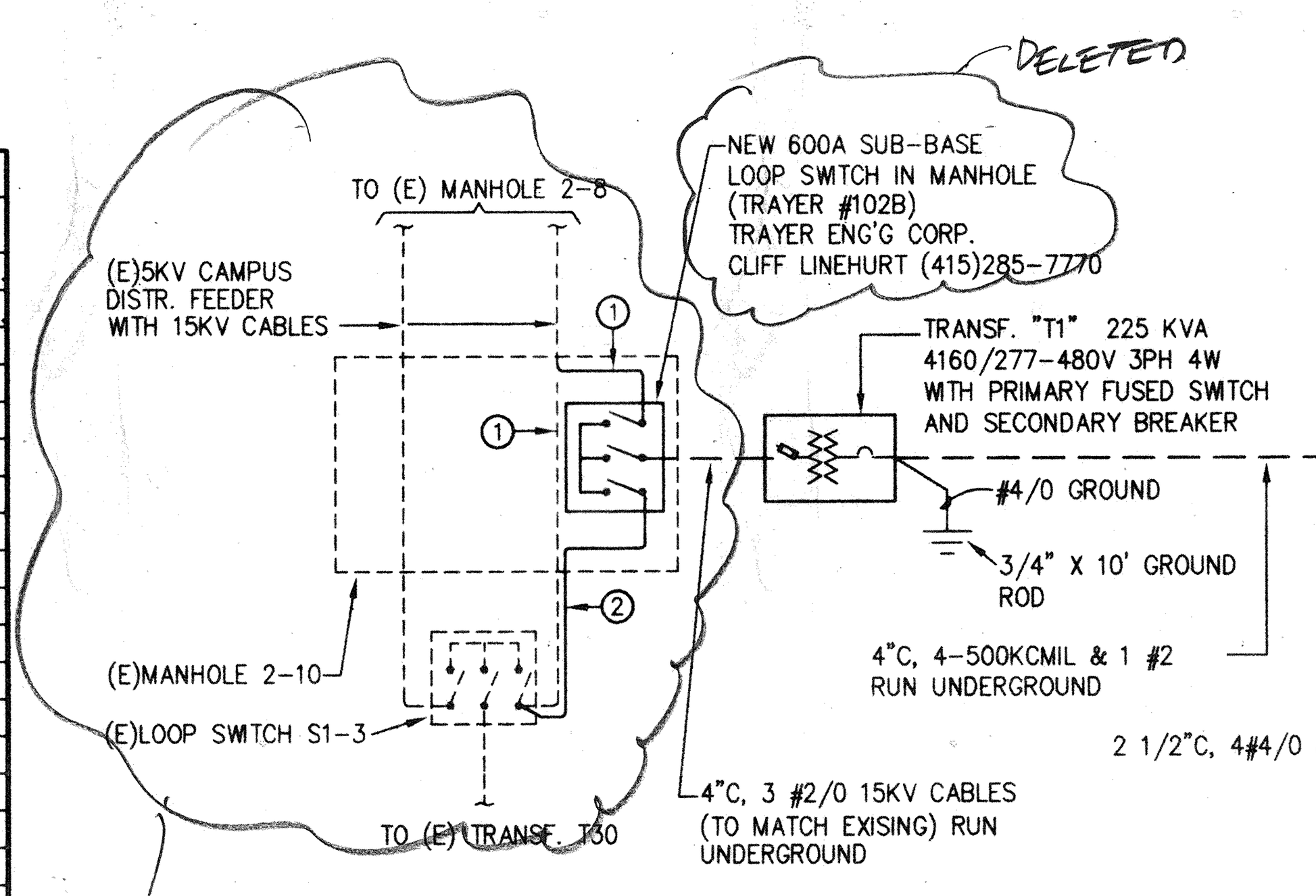

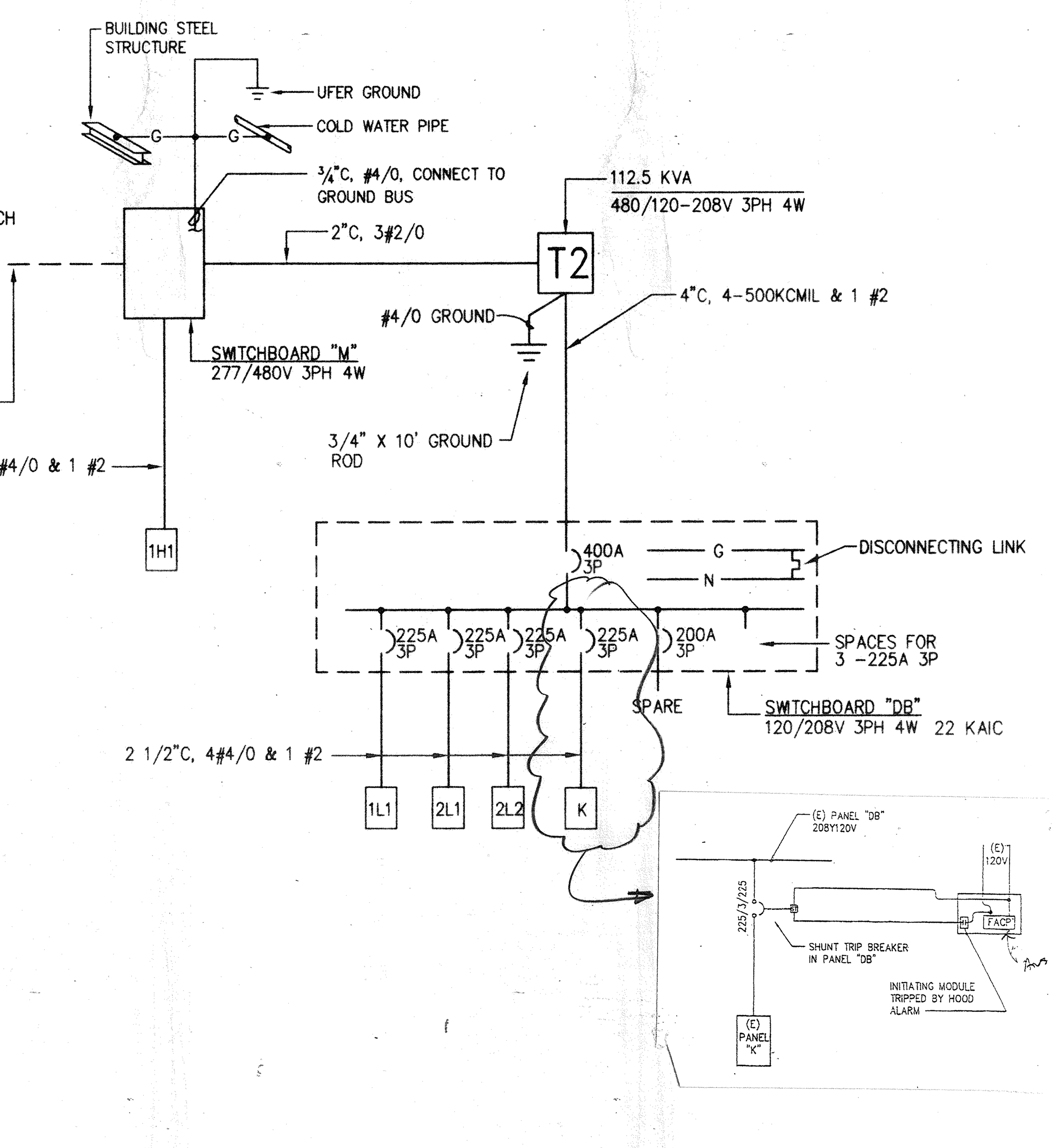

NOTES:

1. PULL BACK (E) HIGH VOLTAGE CABLES, LOOP AND CONNECT TO NEW LOOP SWITCH.
2. PROVIDE NEW 4"C, 3 #2/0 15KV CABLES (MATCH EXISTING).

LOAD CALCULATIONS:

LIGHTING	29	X 1.25	36.25 KVA
RECEPTACLES	10	X 1.0	10.0
	55	X 0.5	25.5
KITCHEN EQPT	22.6	X 0.8	18.1
H V A C	88.6	X 1.0	88.6
	14.6	X 0.25	3.65
			182.10 KVA

$$I_T = \frac{182.10\,KVA}{480V \times 1.732} = 219.1 \text{ AMPS}$$

1/E0.2 POWER RISER DIAGRAM
NO SCALE

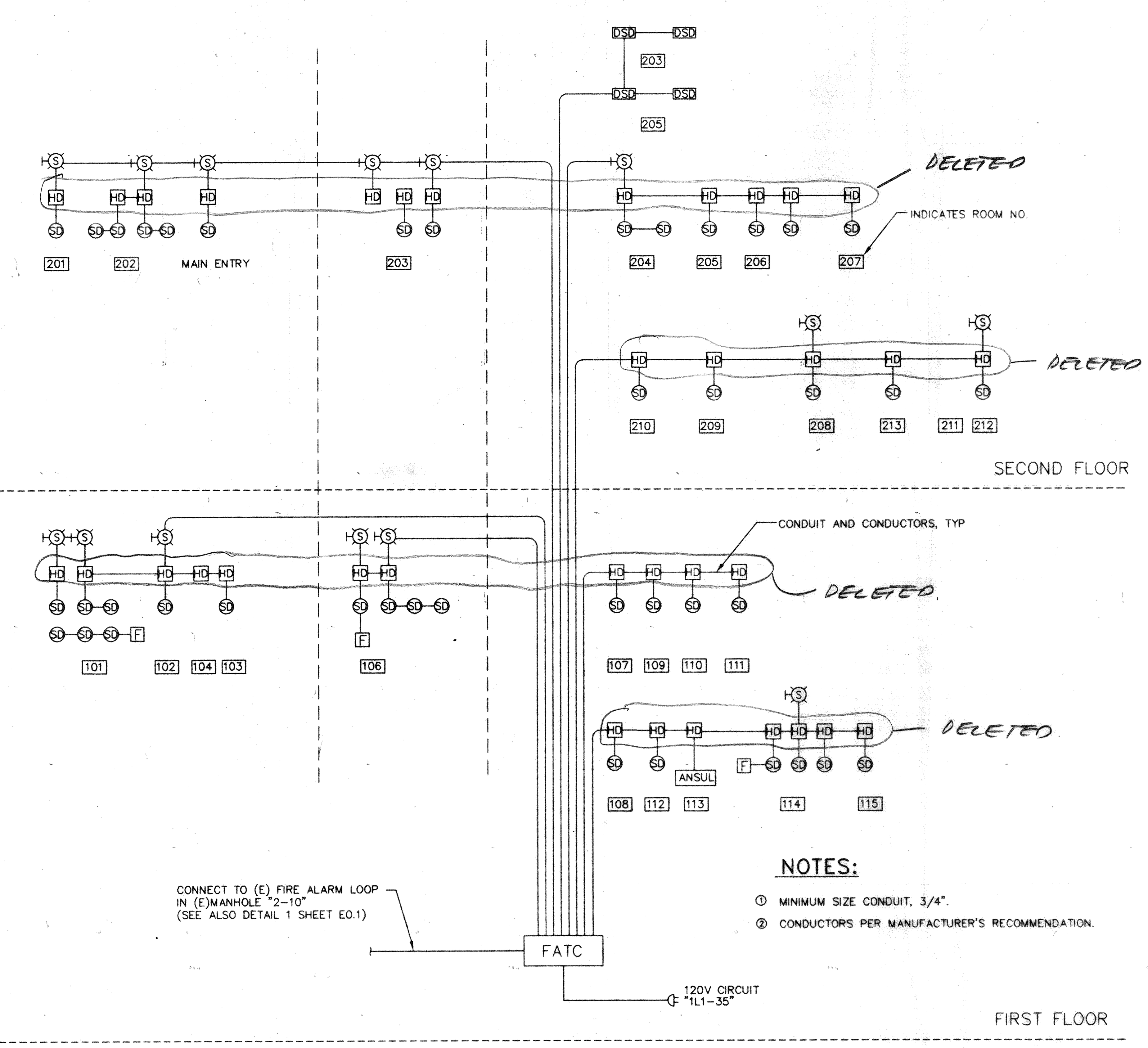

NOTES:

1. MINIMUM SIZE CONDUIT, 3/4".
2. CONDUCTORS PER MANUFACTURER'S RECOMMENDATION.

2/E0.2 FIRE ALARM RISER DIAGRAM
NO SCALE (FOR REF. ONLY)

AS BUILT
CORRECTIONS BY HAF
CONTRACT NO.
DATE OCT 31 97

04/16/96
07:30 am

REVISION	DATE	DESCRIPTION	INITIAL

ISSUE FOR PROGRESS REVIEW	DATE:
ISSUE FOR PLAN CHECK	
ISSUE FOR PERMIT	
ISSUE FOR BID	4/4/96
ISSUE FOR CONSTRUCTION	

SEAL: REGISTERED PROFESSIONAL ENGINEER RICHARD A. MADDEN No. E 8626 Exp. 9-30-98 ELECTRICAL STATE OF CALIFORNIA

CONSULTANT:
WHM INCORPORATED
Engineering Consultants
1605 School Street
Moraga, CA 94556
Tel (510)376-2902 • Fax (510)376-2904
94112

INTERACTIVE RESOURCES
ARCHITECTURE • PLANNING • ENGINEERING
117 PARK PLACE
POINT RICHMOND
CALIFORNIA 94801
(510) 236-7435
(FAX.) 232-5325

PROJECT:
STUDENT UNION

Diablo Valley College
321 Golf Club Road
Pleasant Hill, CA. 94523

Contra Costa Community College District

STAMP:
JO LS GR 4-17-96

APPL. NUMBER:

KEY PLAN:
10/31/97

SHEET TITLE:
PANEL SCHEDULES AND RISER DIAGRAMS

SCALE	AS NOTED	
PROJ. NO.	A94087.04	
PREPARATION AND REVIEW		
PURPOSE	PERSONAL/INITIAL	DATE
DRAWN BY	Denggoy	
PROJ. MGR.	JLWe	
PEER REVIEW	XXX	XX/XX/XX

SHEET NUMBER: E 0.2
NUMBER: OF:

E:\94112\E0-2

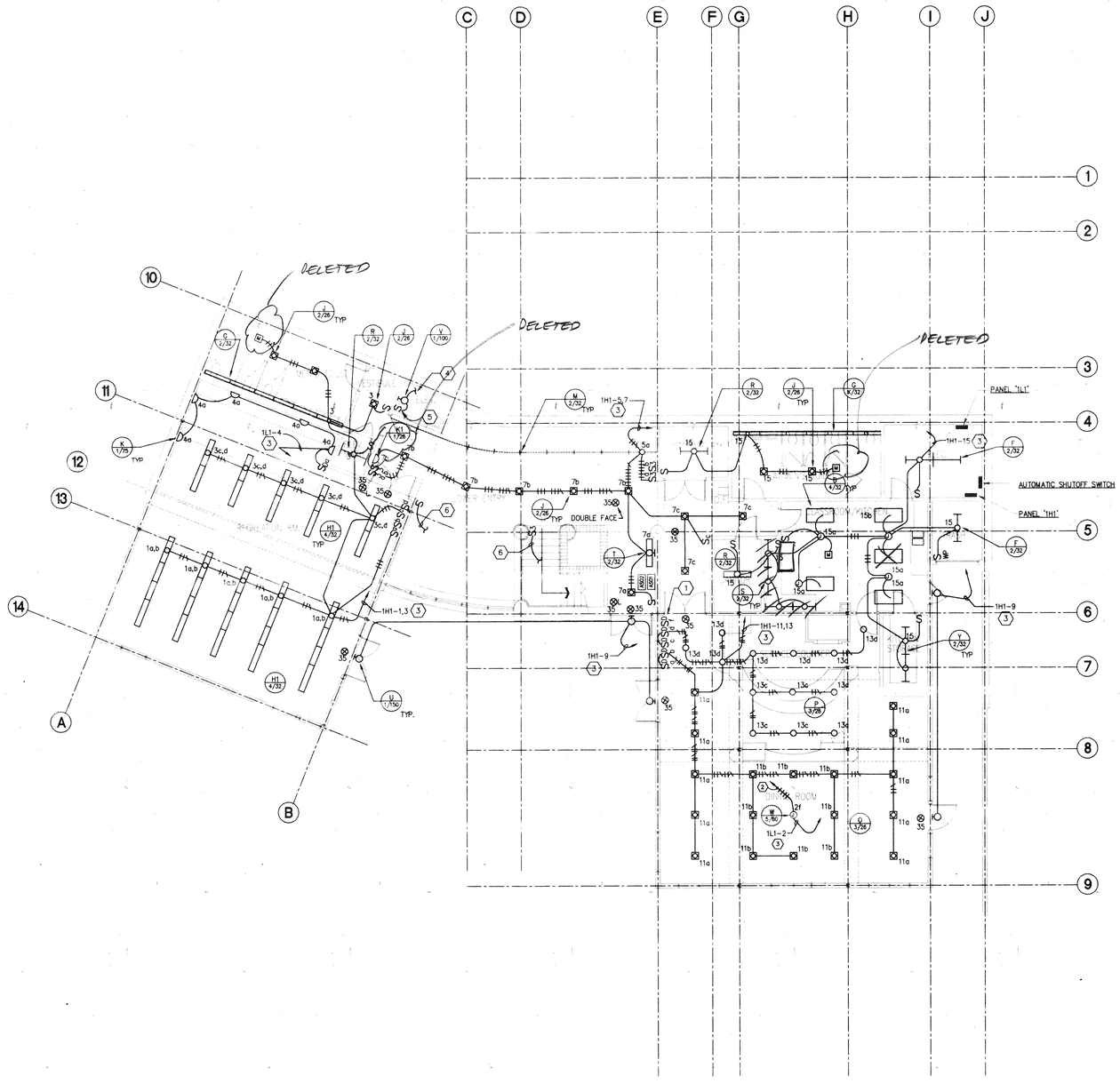

1 E1.1 FIRST FLOOR LIGHTING PLAN

NORTH

SHEET NOTES

1. COMBINATION CEILING FAN/VARIABLE SPEED SWITCH AND INCANDESCENT LIGHT DIMMER. (P & S 94331-I)
2. TO LIGHT AND CEILING FAN SWITCH.
3. VIA AUTOMATIC SHUTOFF SWITCH.
4. SEE E-2.1 FOR CONTINUATION.
5. MOUNT SWITCH CLOSE TO PIT ACCESS DOOR.
6. SEE E-1.2 FOR CONTINUATION.

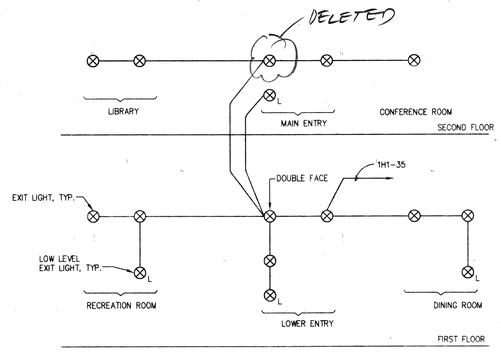

2 E1.1 EXIT LIGHTS CIRCUIT RISER DIAGRAM

NO SCALE

AS BUILT
CORRECTIONS BY HAF
CONTRACT NO.
DATE OCT 31 97

REVISION	DATE	DESCRIPTION	INITIAL

ISSUE FOR PROGRESS REVIEW	DATE:
ISSUE FOR PLAN CHECK	
ISSUE FOR PERMIT	
ISSUE FOR BID	4/4/96
ISSUE FOR CONSTRUCTION	

SEAL:

REGISTERED PROFESSIONAL ENGINEER RICHARD A. MORGAN No. E 8626 Exp. 9-30-98 ELECTRICAL STATE OF CALIFORNIA

CONSULTANT:

WHM INCORPORATED
Engineering Consultants
1605 School Street
Moraga, CA 94556
Tel (510)376-2902 • Fax (510)376-2904
94112

INTERACTIVE RESOURCES
ARCHITECTURE • PLANNING • ENGINEERING
117 PARK PLACE
POINT RICHMOND
CALIFORNIA 94801
(510) 236-7435
(FAX.) 232-5325

PROJECT:

STUDENT UNION

Diablo Valley College
321 Golf Club Road
Pleasant Hill, CA. 94523

Contra Costa
Community College District

STAMP:

GR 4-17-96

APPL. NUMBER:

KEY PLAN:

10/31/97

SHEET TITLE:

FIRST FLOOR LIGHTING PLAN

SCALE	As Shown
PROJ. NO.	A94087.04

PREPARATION AND REVIEW

PURPOSE	PERSONAL/INITIAL	DATE
DRAWN BY	Denggoy	
PROJ. MGR.	JLWe	
PEER REVIEW	XXX	XX/XX/XX

SHEET NUMBER:

E 1.1

NUMBER: OF:

E:\94112\E1-2

04/16/96 07:37 am

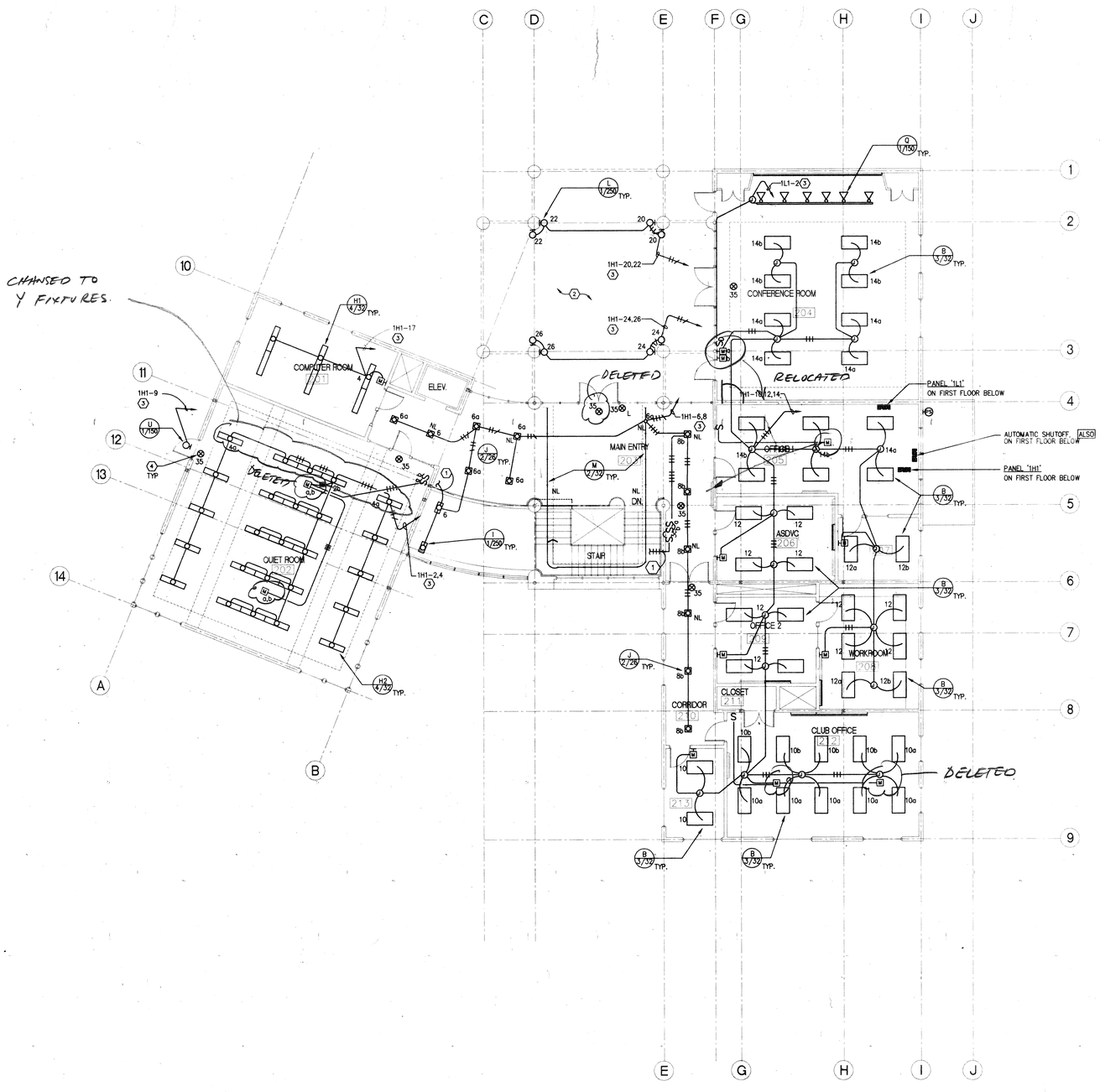

SHEET NOTES

1. SEE SHEET E1.1 FOR CONTINUATION.
2. COORDINATE WITH ARCHITECT IN CONCEALING ALL WIRING IN THIS AREA.
3. VIA AUTOMATIC SHUT-OFF CONTROL.
4. SEE SHEET E1.1 FOR CIRCUITRY OF EXIT LIGHTS.

1 / E1.1 SECOND FLOOR LIGHTING PLAN

SCALE 1/8" = 1'-0"

AS BUILT
CORRECTIONS BY HAF
CONTRACT NO.
DATE Oct 31 97

04/16/96 07:39 am

REVISION	DATE	DESCRIPTION	INITIAL

ISSUE FOR PROGRESS REVIEW	DATE:
ISSUE FOR PLAN CHECK	
ISSUE FOR PERMIT	
ISSUE FOR BID	4/4/96
ISSUE FOR CONSTRUCTION	

SEAL:

REGISTERED PROFESSIONAL ENGINEER RICHARD A. MADDEN No. E 8626 Exp. 9-30-98 ELECTRICAL STATE OF CALIFORNIA

CONSULTANT:

INTERACTIVE RESOURCES

ARCHITECTURE • PLANNING • ENGINEERING

117 PARK PLACE
POINT RICHMOND
CALIFORNIA 94801
(510) 236-7435
(FAX.) 232-5325

PROJECT:

STUDENT UNION

Diablo Valley College
321 Golf Club Road
Pleasant Hill, CA. 94523

Contra Costa Community College District

STAMP:

GR 4-17-96

APPL. NUMBER:

KEY PLAN:

10/31/97

SHEET TITLE:

SECOND FLOOR LIGHTIN6 PLAN

SCALE	As Shown
PROJ. NO.	A94087.04

PREPARATION AND REVIEW

PURPOSE	PERSONAL/INITIAL	DATE
DRAWN BY	Denggoy	
PROJ. MGR.	JLWe	
PEER REVIEW	XXX	XX/XX/XX

SHEET NUMBER:

E 1.2

NUMBER: OF:

E:\94112\E1.2

69

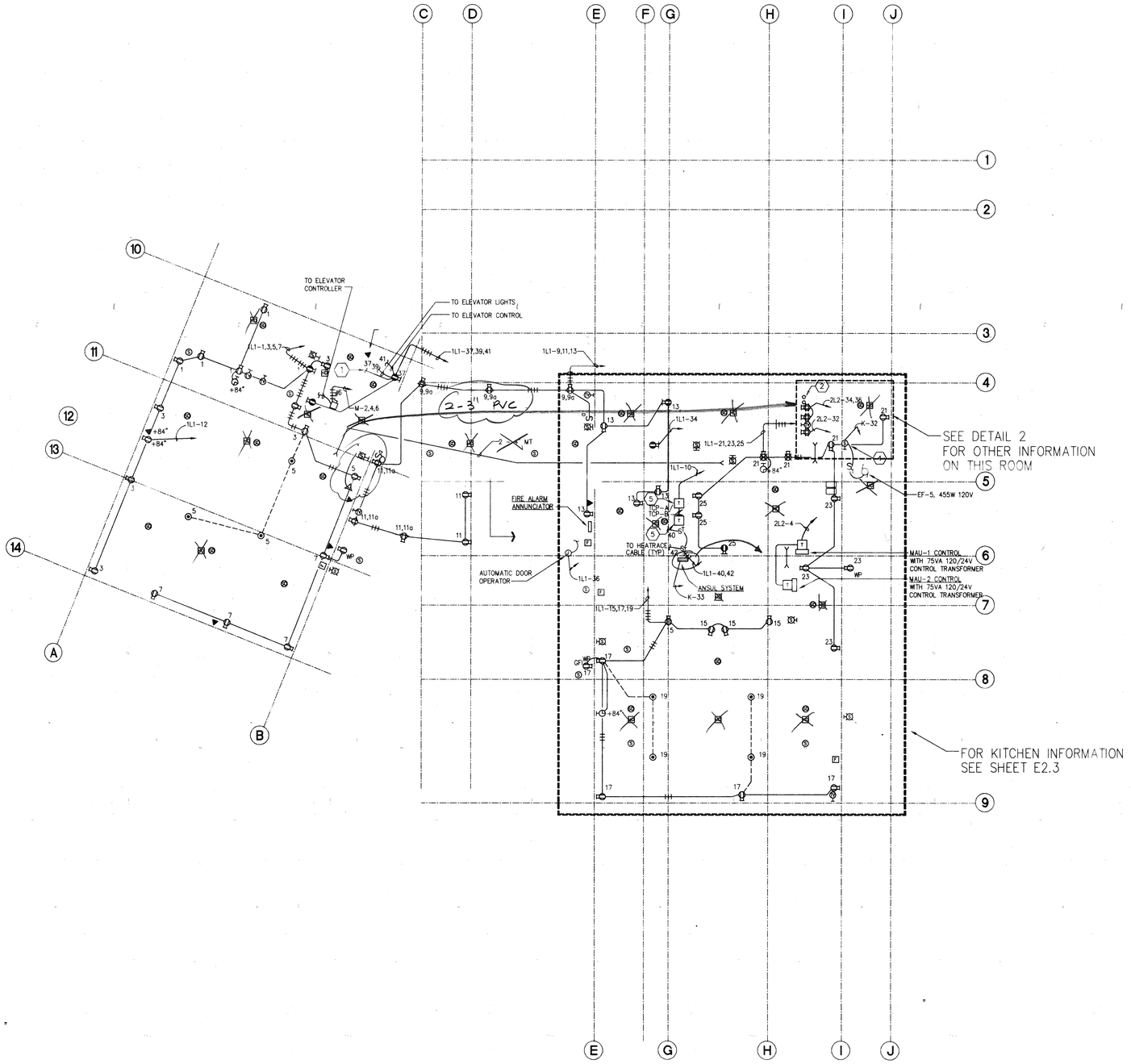

1 E2.1 FIRST FLOOR POWER PLAN

SCALE: 1/8" : 1'-0"

NOTE: SEE SHEET EC-1 FOR EXACT SPEAKER AND TV OUTLET LOCATION, DETAILS AND DIAGRAM

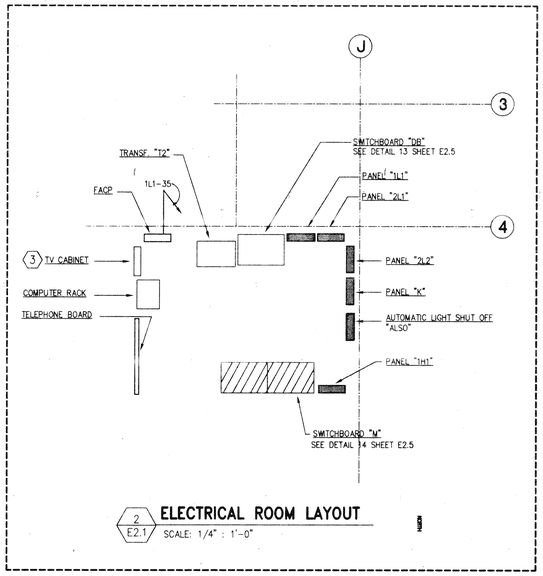

2 E2.1 ELECTRICAL ROOM LAYOUT

SCALE: 1/4" : 1'-0"

SHEET NOTES:

1. SEE SHEET E1.1 FOR CONTINUATION
2. PROVIDE 2 - 4" COMPUTER CONDUIT STUBBED TO SECOND FLOOR ACCESSIBLE CEILING SPACE
3. PROVIDE 1 - 4"MT FOR ANTENNA TO ROOF. TERMINATE WITH WEATHER CAP.
4. ON/OFF SWITCH PROVIDED, INSTALLED AND WIRED BY ELECTRICAL CONTRACTOR.
4. 75KVA 120/24V TRANSFORMER FOR TEMPERATURE CONTROL PANEL INSTALLED AND WIRED BY ELECTRICAL CONTRACTOR.

EQUIPMENT ANCHORAGE NOTES

ALL MECHANICAL AND ELECTRICAL EQUIPMENT SHALL BE BRACED OR ANCHORED TO RESIST A HORIZONTAL FORCE ACTING IN ANY DIRECTION USING THE FOLLOWING CRITERIA:

FIXED EQUIPMENT ON GRADE	20% OF OPERATING WT.
FIXED EQUIPMENT ON STRUCTURE	30% OF OPERATING WT.
EMERGENCY POWER EQUIPMENT ON GRADE	30% OF OPERATING WT.
EMERGENCY POWER EQUIPMENT ON STRUCTURE	40% OF OPERATING WT.

SIMULTANEOUS VERTICAL FORCE - USE 1/3 X HORIZ. FORCE FOR FLEXIBLY MOUNTED EQUIPMENT SEE TITLE 24 - SECTION 2312 (b)2

WHERE ANCHORAGE DETAILS ARE NOT SHOWN ON THE DRAWINGS, THE FIELD INSTALLATION SHALL BE SUBJECT TO THE APPROVAL OF THE ELECTRICAL ENGINEER AND THE FIELD REPRESENTATIVE OF THE OFFICE OF REGULATION SERVICES.

AS BUILT
CORRECTIONS BY HHF
CONTRACT NO.
DATE Oct 31 97

04/16/96 07:47 am

REVISION	DATE	DESCRIPTION	INITIAL

ISSUE FOR PROGRESS REVIEW	DATE:
ISSUE FOR PLAN CHECK	
ISSUE FOR PERMIT	
ISSUE FOR BID	4/4/96
ISSUE FOR CONSTRUCTION	

SEAL:

REGISTERED PROFESSIONAL ENGINEER RICHARD A. MARCUS No. E 9606 Exp. 9-30-98 ELECTRICAL STATE OF CALIFORNIA

CONSULTANT:

WHM INCORPORATED
Engineering Consultants
1605 School Street
Moraga, CA 94556
Tel (510)376-2902 • Fax (510)376-2904
94112

INTERACTIVE RESOURCES
ARCHITECTURE • PLANNING • ENGINEERING
117 PARK PLACE
POINT RICHMOND
CALIFORNIA 94801
(510) 236-7435
(FAX.) 232-5325

PROJECT:

STUDENT UNION

Diablo Valley College
321 Golf Club Road
Pleasant Hill, CA. 94523

Contra Costa Community College District

STAMP:

APPL. NUMBER:

KEY PLAN:

10/31/97

SHEET TITLE:

FIRST FLOOR POWER AND SIGNAL PLAN

SCALE	As Shown
PROJ. NO.	A94087.04

PREPARATION AND REVIEW		
PURPOSE	PERSONAL/INITIAL	DATE
DRAWN BY	Dengpy	
PROJ. MGR.	J.We	
PEER REVIEW	XXX	XX/XX/XX

SHEET NUMBER:

E 2.1

NUMBER: OF:

E:\WHI\E2X1

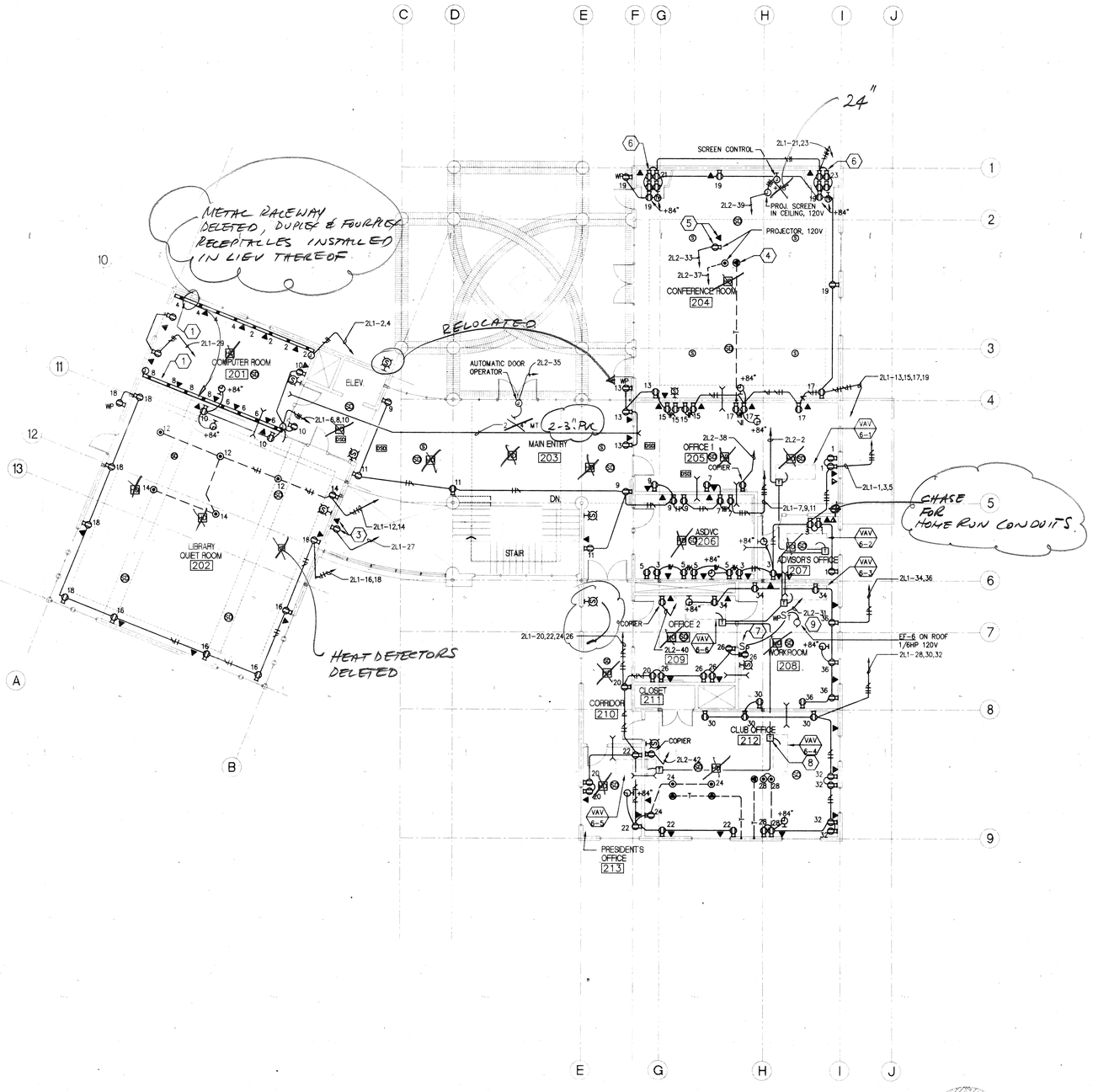

SHEET NOTES:

1. PROVIDE 3 – 1 1/4" COMPUTER MT FROM METAL RACEWAY TO ACCESSIBLE CEILING SPACE.
2. PROVIDE 1"MT WITH RG-6 TV CABLE TO TV TERMINAL BOX AT ELECTRICAL RM. GROUND FLOOR.
3. INSTALL OUTLETS @ +84" ABOVE SECOND FLOOR LINE.
4. COMPUTER OUTLET IN FLOOR BOX. PROVIDE 3/4"MT TO ACCESSIBLE CEILING SPACE
5. COMPUTER AND RECEPTACLE OUTLETS IN CEILING.
6. FOUR RECEPTACLES IN CLOSET SHELVINGS.
7. SWITCH WITH PILOT LIGHT, P & S 20AC1-RPL.
8. 75VA, 120/24V CONTROL TRANSFORMER FOR VAV CONTROL. MOUNT ON J-BOX ABOVE CEILING ADJACENT TO VAV UNIT (TYPICAL OF 6).
9. VIA TCP-B AT JANITORS ROOM GROUND FLOOR. SEE 'M' SERIES DRAWINGS SHEET M-5.

1 / E2.2 SECOND FLOOR POWER PLAN

SCALE: 1/4" = 1'-0"

NOTE: SEE SHEET EC-2 FOR EXACT SPEAKER AND TV OUTLET LOCATIONS, DETAILS AND DIAGRAM.

AS BUILT
CORRECTIONS BY HAF
CONTRACT NO.
DATE OCT 31 97

04/16/96 08:52 am

REVISION	DATE	DESCRIPTION	INITIAL

ISSUE FOR PROGRESS REVIEW	DATE:
ISSUE FOR PLAN CHECK	
ISSUE FOR PERMIT	
ISSUE FOR BID	4/4/96
ISSUE FOR CONSTRUCTION	

SEAL:

REGISTERED PROFESSIONAL ENGINEER — EDWARD A. RICHARDS — No. E 8625 — Exp. 9-30-98 — ELECTRICAL — STATE OF CALIFORNIA

CONSULTANT:

WHM INCORPORATED
Engineering Consultants
1605 School Street
Moraga, CA 94556
Tel (510)376-2902 • Fax (510)376-2904
94112

INTERACTIVE RESOURCES
ARCHITECTURE • PLANNING • ENGINEERING
117 PARK PLACE
POINT RICHMOND
CALIFORNIA 94801
(510) 236-7435
(FAX.) 232-5325

PROJECT:

STUDENT UNION

Diablo Valley College
321 Golf Club Road
Pleasant Hill, CA. 94523

Contra Costa
Community College District

STAMP:

JJW LS GR 4-17-96

APPL. NUMBER:

KEY PLAN:

10/31/97

SHEET TITLE:

SECOND FLOOR POWER AND SIGNAL PLAN

SCALE	As Shown
PROJ. NO.	A94087.04

PREPARATION AND REVIEW		
PURPOSE	PERSONAL/INITIAL	DATE
DRAWN BY	Denggoy	
PROJ. MGR	JLWe	
PEER REVIEW	XXX	XX/XX/XX

SHEET NUMBER:

E 2.2

NUMBER: OF:

E\94112\E2-2

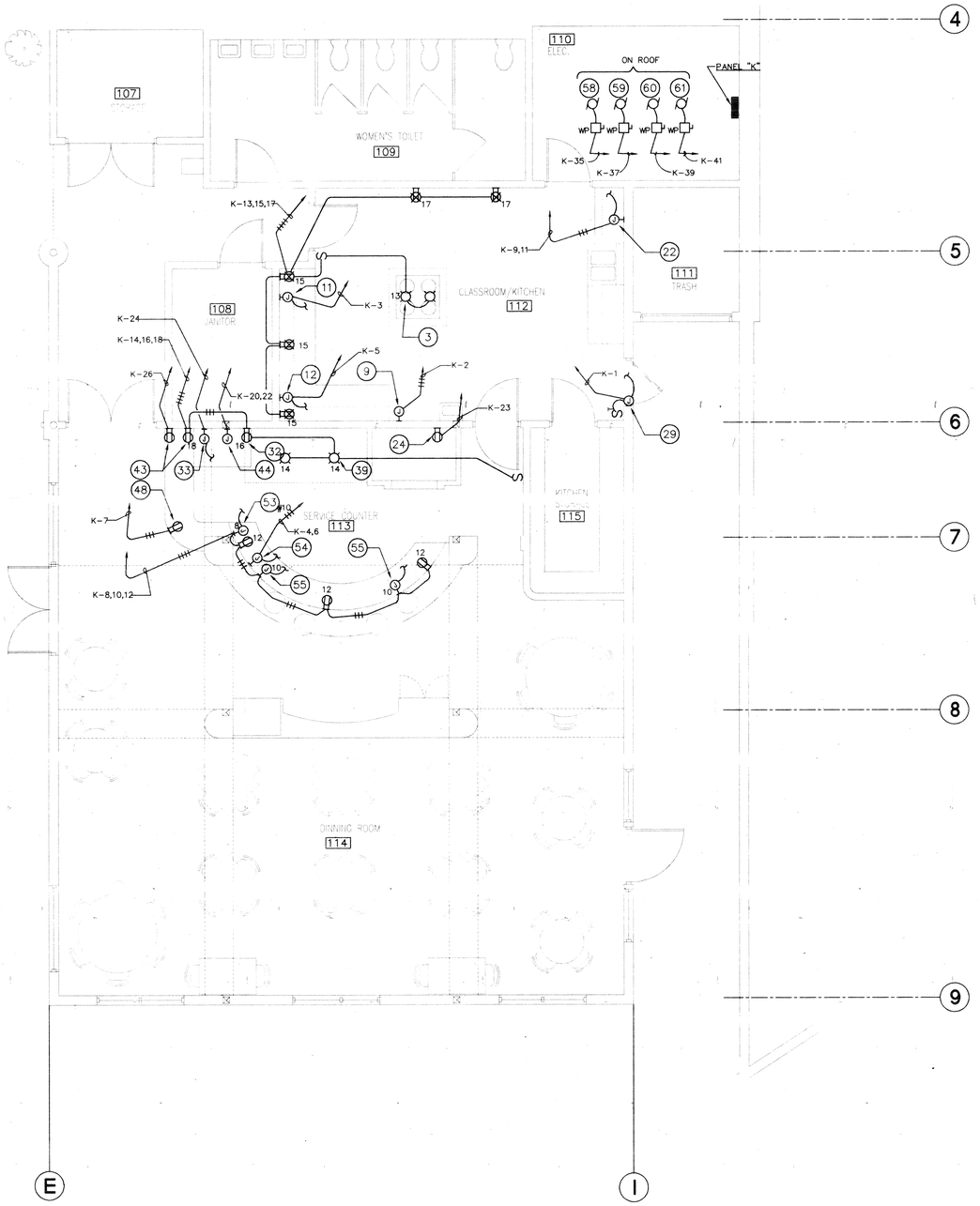

1 FIRST FLOOR KITCHEN POWER PLAN
E2.3

KITCHEN EQUIPMENT SCHEDULE

	DESCRIPTION	QTY	ELECTRICAL DATA		
③	HOOD LIGHTS	2	120V 100W		
④	EXHAUST FAN	1			480V 3PH 3HP
⑤	MAKE-UP AIR FAN	1			480V 3PH 1HP
⑨	ICE MAKER	1	120V 7.3 KW		
⑪	UNDERCOUNTER REFRIG.	1	120V 2.0 AMPS		
⑫	UNDERCOUNTER REFRIG.	1	120V 4.0 AMPS		
㉒	DISHWASHER	1		208V 1PH 7.6 AMPS	
㉔	PIZZA OVEN	1	120V 15 AMPS		
㉙	AIR CURTAIN FAN	1	120V 1/2 HP		
		1			
㉜	ROTARY SPLIT	1	120V 1/15 HP		
㉝	REFRIGERATOR	1	120V 2.0 AMPS		
㉟	EXHAUST FAN	1			480V 3PH 1HP
㊱	MAKE-UP AIR FAN	1			480V 3PH 2HP
㊴	HOOD LIGHTS	2	120V 100W		
㊸	EXPRESSO GRINDER	2	120V 9.0 AMPS		
㊹	EXPRESSO MACHINE	1		208V 1PH 14 AMPS	
㊽	CASH REGISTER	1	120V 15 AMPS		
㊸	UNDERCOUNTER REFRIG.	1	120V 2.0 AMPS		
㊹	SOUPWARMER	1		208V 1PH .36KW	
㊺	REFRIG. SANDWCH	2	120V 2.0 AMPS		
㊽	REMOTE REFRIG. COND.	1	120V 1/3 HP		
㊾	REMOTE REFRIG. COND.	1	120V 1/3 HP		
㊿	REMOTE REFRIG. COND.	1	120V 1/2 HP		
⑥①	REMOTE REFRIG. COND.	1	120V 1/2 HP		

NOTE:
REFER TO "FS" SERIES DRAWINGS FOR EXACT LOCATION AND CONNECTION REQUIREMENTS

AS BUILT
CONTRACTOR HAF
CONTRACT DATE
DATE OCT 31 97

04/15/96 07:42 am

REVISION	DATE	DESCRIPTION	INITIAL

ISSUE FOR PROGRESS REVIEW	DATE:
ISSUE FOR PLAN CHECK	
ISSUE FOR PERMIT	
ISSUE FOR BID	4/24/96
ISSUE FOR CONSTRUCTION	

SEAL:
REGISTERED PROFESSIONAL ENGINEER
RICHARD A. MOORE
Exp. 9-30-96
ELECTRICAL
STATE OF CALIFORNIA

CONSULTANT:
WHM INCORPORATED
Engineering Consultants
1605 School Street
Moraga, CA 94556
Tel (510)376-2902 • Fax (510)376-2904
94112

INTERACTIVE
RESOURCES
ARCHITECTURE • PLANNING • ENGINEERING
117 PARK PLACE
POINT RICHMOND
CALIFORNIA 94801
(510) 236-7435
(FAX.) 232-5325

PROJECT:
STUDENT UNION

Diablo Valley College
321 Golf Club Road
Pleasant Hill, CA. 94523

Contra Costa
Community College District

STAMP:
LS GR
4-17-96

APPL. NUMBER:

KEY PLAN:
10/31/97

SHEET TITLE:
KITCHEN ELECTRICAL PLAN

SCALE	As Shown
PROJ. NO.	A94087.04

PREPARATION AND REVIEW		
PURPOSE	PERSONAL/INITIAL	DATE
DRAWN BY	Denggoy	
PROJ. MGR.	J.We	
PEER REVIEW	XXX	XX/XX/XX

SHEET NUMBER:
E
2.3

NUMBER: OF:

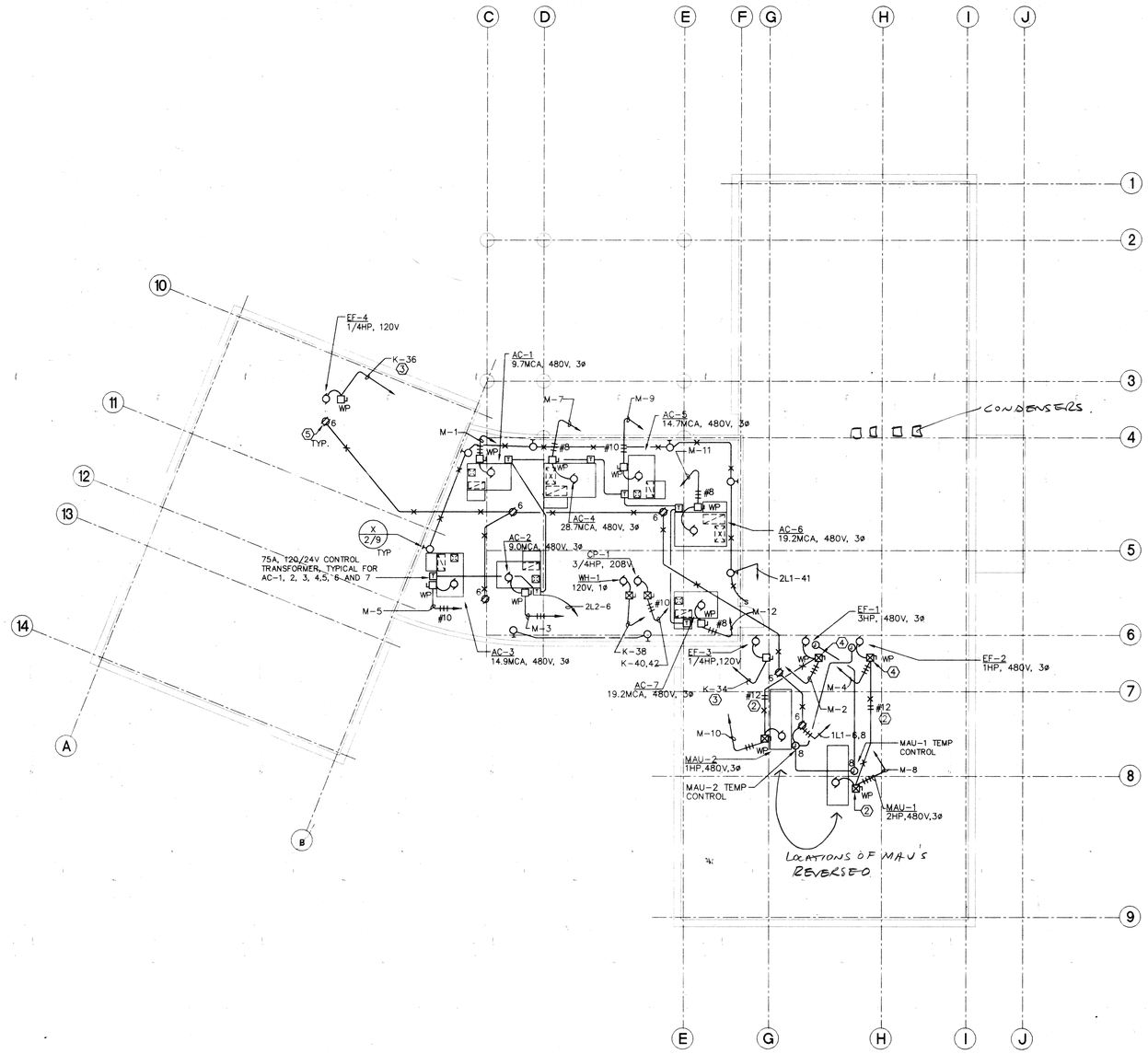

SHEET NOTES:

1. ALL ELECTRCICAL DEVICES INSTALLED OUTDOOR SHALL BE WEATHERPROOF TYPE AND/OR WITH NEMA 3R ENCLOSURES. SEE "M" SERIES DRAWINGS FOR EXACT LOCATION AND CONNECTION REQUIREMENTS.
2. PROVIDE INTERLOCK WIRING.
3. VIA "TCP-A"/"TCP-B" AT JANITOR'S ROOM, GROUND FLOOR. SEE "M" SERIES DRAWINGS, SHEET M-5.
4. PROVIDE 110V STARTER COIL WITH INTEGRAL CONTROL TRANSFORMER, 50VA 480/110V 1PH FOR STARTER COIL AND HVAC CONTROL.
5. MOUNT RECEPTACLE CLOSE TO EQUIPMENT.

1 / E2.4 ELECTRICAL ROOF PLAN (1)
SCALE: 1/8" = 1'-0"

NORTH

AS BUILT
CORRECTIONS BY HAF
CONTRACT NO.
DATE OCT 3 / 97

04/16/96 09:10 am

REVISION	DATE	DESCRIPTION	INITIAL

ISSUE FOR PROGRESS REVIEW	DATE:
ISSUE FOR PLAN CHECK	
ISSUE FOR PERMIT	
ISSUE FOR BID	4/4/96
ISSUE FOR CONSTRUCTION	

SEAL:

REGISTERED PROFESSIONAL ENGINEER
RICHARD A. MADDEN
No. E 8626
Exp. 9-30-98
ELECTRICAL
STATE OF CALIFORNIA

CONSULTANT:

WHM INCORPORATED
Engineering Consultants
1605 School Street
Moraga, CA 94556
Tel (510)376-2902 • Fax (510)376-2904
94112

INTERACTIVE RESOURCES
ARCHITECTURE • PLANNING • ENGINEERING
117 PARK PLACE
POINT RICHMOND
CALIFORNIA 94801
(510) 236-7435
(FAX.) 232-5325

PROJECT:

STUDENT UNION

Diablo Valley College
321 Golf Club Road
Pleasant Hill, CA. 94523

Contra Costa
Community College District

STAMP:

LS GR
4-17-96

APPL. NUMBER:

KEY PLAN:

LICENSED ARCHITECT
10/31/97

SHEET TITLE:

ELECTRICAL ROOF PLAN

SCALE	As Shown
PROJ. NO.	A94087.04

PREPARATION AND REVIEW

PURPOSE	PERSONAL/INITIAL	DATE
DRAWN BY	Denggoy	
PROJ. MGR.	JLWe	
PEER REVIEW	XXX	XX/XX/XX

SHEET NUMBER:

E
2.4

NUMBER: OF:

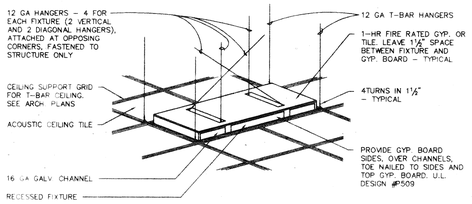

1 / E2.5 **1-HOUR RATED RECESSED FIXTURE ENCLOSURE** NO SCALE

RELAY SCHEDULE "ALSO"			
1H1-1	1	2	1H1-2
1H1-3	3	4	1H1-4
1H1-5	5	6	1H1-6
1H1-7	7	8	1H1-7
* 1H1-9	9	10	1H1-8
1H1-11	11	12	1H1-10
1H1-13	13	14	1H1-12
1H1-15	15	16	1H1-14
1L1-2	17	18	1H1-20
1L1-4	19	20	1H1-22
S P A R E	21	22	1H1-24
	23	24	1H1-26
	25	26	S P A R E
	27	28	
	29	30	
	31	32	

NOTE:
* ALL EXTERIOR LIGHTS TO BE CONTROLLED VIA PHOTO SWITCH

5 / E2.5 **AUTOMATIC LIGHT SHUT-OFF SCHEDULE** NO SCALE

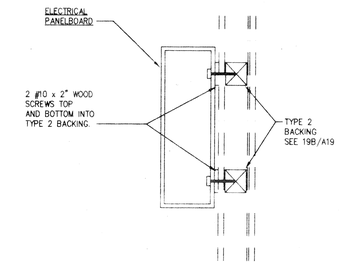

9 / E2.5 **SURFACE MT'D PANEL DETAIL** NO SCALE

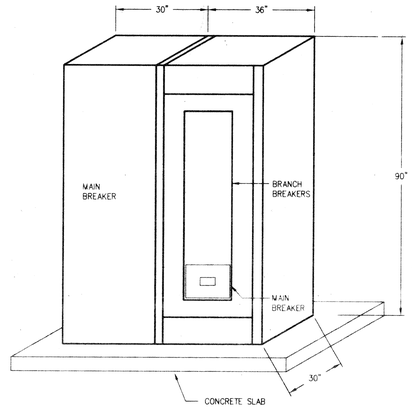

13 / E2.5 **SWITCHBOARD "M" ELEVATION** NOT TO SCALE

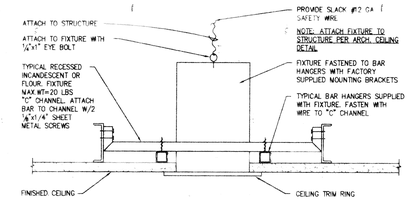

2 / E2.5 **RECESSED FLUORESCENT OR INC. FIXTURE** NO SCALE

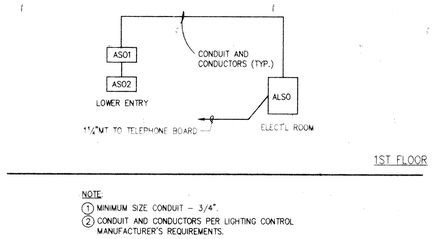

NOTE:
1. MINIMUM SIZE CONDUIT - 3/4".
2. CONDUIT AND CONDUCTORS PER LIGHTING CONTROL MANUFACTURER'S REQUIREMENTS.

6 / E2.5 **AUTOMATIC LIGHT SHUT-OFF RISER DIAGRAM** NO SCALE

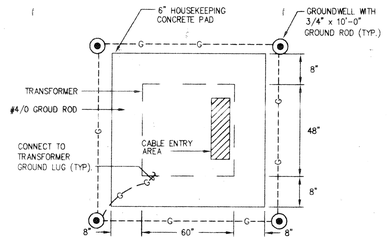

10 / E2.5 **TRANSFORMER LAYOUT** NO SCALE

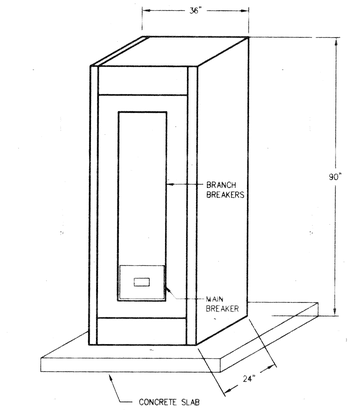

14 / E2.5 **SWITCHBOARD "DB" ELEVATION** NOT TO SCALE

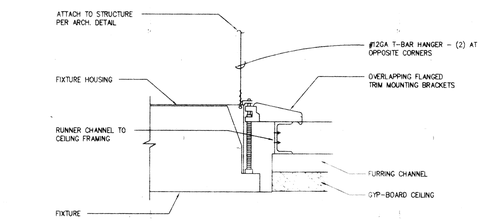

3 / E2.5 **RECESSED FIXTURE MOUNTING DETAIL FOR GYP-BOARD CEILING** NO SCALE

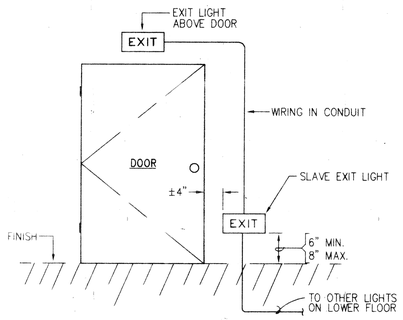

7 / E2.5 **TYPICAL LOW LEVEL EXIT SIGN INSTALLATION** NO SCALE

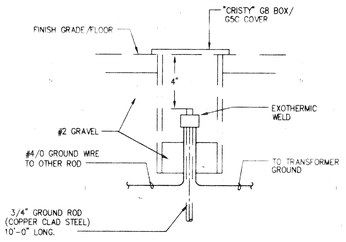

11 / E2.5 **GROUND WELL DETAIL** NO SCALE

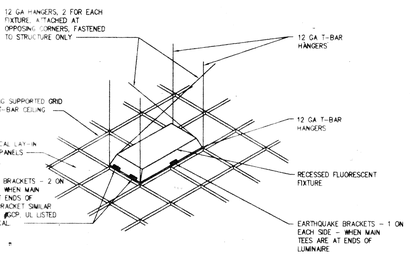

4 / E2.5 **RECESSED FLUORESCENT FIXTURE MOUNTING DETAIL FOR T-BAR CEILING** NO SCALE

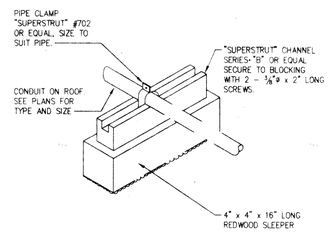

8 / E2.5 **PIPE SUPPORT ON ROOF DETAIL** (USE ON FLAT ROOF ONLY) NO SCALE

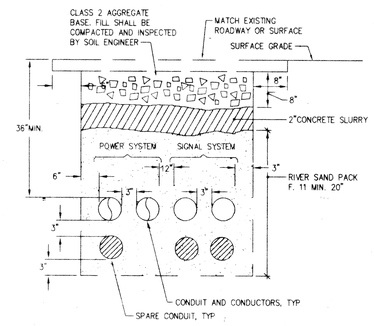

12 / E2.5 **TYPICAL UNDERGROUND CONDUIT INSTALLATION/ARRANGEMENT DETAIL** NO SCALE
(SEE SHEET E0.1 FOR REQUIREMENTS)

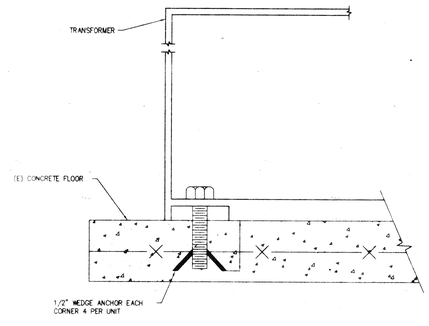

15 / E2.5 **TRANSFORMER/SWITCHBOARD BOLT DOWN DETAIL** NOT TO SCALE

AS BUILT
CORRECTIONS BY: HAF
CONTRACT NO.
DATE: OCT 8 '97

04/16/96 07:44 am

REVISION	DATE	DESCRIPTION	INITIAL

ISSUE FOR PROGRESS REVIEW	DATE:
ISSUE FOR PLAN CHECK	
ISSUE FOR PERMIT	
ISSUE FOR BID	4/4/96
ISSUE FOR CONSTRUCTION	

SEAL:

REGISTERED PROFESSIONAL ENGINEER RICHARD A. WOODS No. E 9635 Exp. 9-30-98 ELECTRICAL STATE OF CALIFORNIA

CONSULTANT:

WHM INCORPORATED
Engineering Consultants
1605 School Street
Moraga, CA 94556
Tel (510)376-2902 • Fax (510)376-2904
94112

INTERACTIVE RESOURCES
ARCHITECTURE • PLANNING • ENGINEERING
117 PARK PLACE
POINT RICHMOND
CALIFORNIA 94801
(510) 236-7435
(FAX) 232-5325

PROJECT:

STUDENT UNION

Diablo Valley College
321 Golf Club Road
Pleasant Hill, CA. 94523

Contra Costa
Community College District

STAMP:

LY GR 4-17-96

APPL. NUMBER:

KEY PLAN:

10/31/97

SHEET TITLE:

PANEL SCHEDULES AND RISER DIAGRAM

SCALE	AS SHOWN NOTED
PROJ. NO.	A94087.04
PREPARATION AND REVIEW	
PURPOSE	PERSONAL/INITIAL / DATE
DRAWN BY	Deggoy
PROJ. MGR	JL We
PEER REVIEW	XXX / XX/XX/XX

SHEET NUMBER:

E 2.5

NUMBER: OF:

E:\WHI2\E2-5

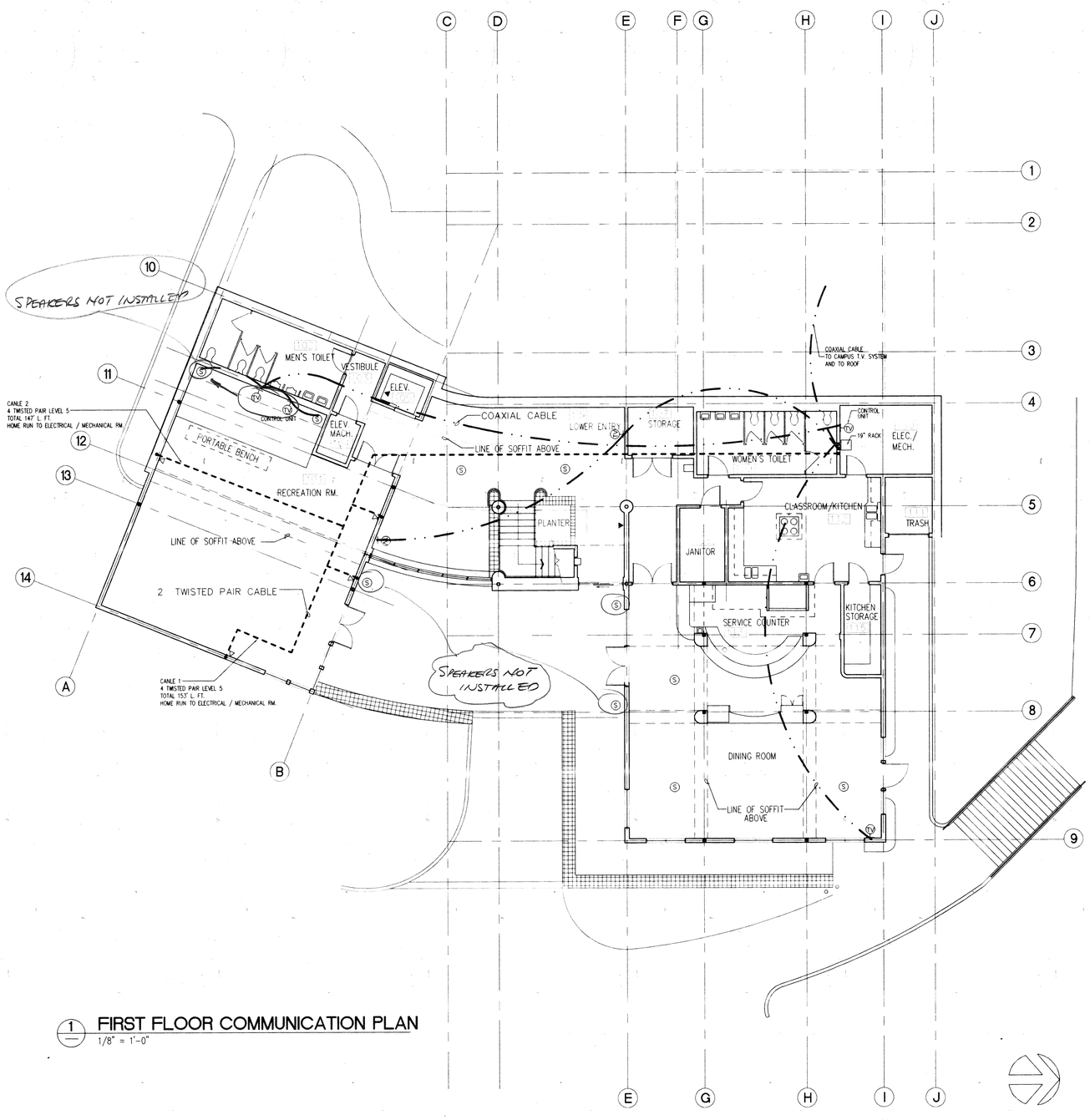

1 FIRST FLOOR COMMUNICATION PLAN
1/8" = 1'-0"

LEGEND

- TELEPHONE OUTLET
- TELEPHONE OUTLET IN FLOOR BOX
- COMPUTER OUTLET (2 - RJ45 DATA JACKS & 2 - CATEGORY 5 TWISTED PAIR)
- COMPUTER OUTLET IN FLOOR BOX (2 - RJ45 DATA JACKS & 2 - CATEGORY 5 TWISTED PAIR)
- 2 TWISTED PAIR CABLE
- COAXIAL CABLE
- CONDUIT UP
- CONDUIT DOWN
- TELEVISION OUTLET
- SPEAKER

GENERAL NOTES:

1. CABLE RUNS IN EXCESS OF TEN (10) CABLES SHALL BE SUPPORTED BY J-HOOKS.
2. NOT USED
3. ALL 10-BASE-T COMPONENTS SHALL BE CATEGORY 5 COMPLIANT.
4. NO 10-BASE -T CABLE RUN SHALL EXCEED 295 FEET INCLUDING LINE CORD.
5. NOT USED
6. 10-BASE-T JACKS AND PATCH PANELS SHALL BE TERMINATED ACCORDING TO T568B AND TSB40 STANDARDS.
7. ALL CABLES SHALL BE ROUTED WITHIN THE UPPER 25% OF THE CEILING SPACE.
8. JACKS SHOWN ADJACENT TO ONE ANOTHER SHALL BE COMBINED INTO ONE PLATE.
9. JACKS ON MODULAR FURNITURE SHALL BE SURFACE MOUNTED TO THE UNDERSIDE OF THE WORK SURFACE.
10. UTP CABLE SHALL BE ROUTED WELL CLEAR OF FLUORESCENT LIGHT FIXTURES, ELECTRIC MOTORS, ELEVATORS, AND OTHER SOURCES OF ELECTRICAL INTERFERENCE.
11. CONTRACTOR AND ARCHITECT TO COORDINATE LOCATION AND ORIENTATION OF EQUIPMENT RACK IN DATA CLOSET WITH DISTRICT.

SHEET NOTES

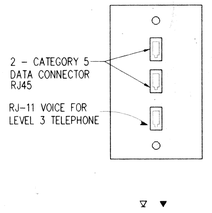

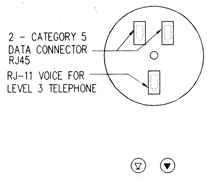

A EC1 TYPICAL TELEPHONE/DATA WALL PLATE ELEVATION
NO SCALE

B EC1 TYPICAL TELEPHONE/DATA CONNECTION INSTALLED IN FLOOR BOX
NO SCALE

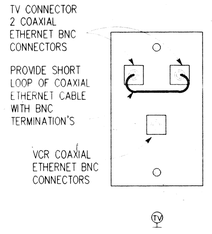

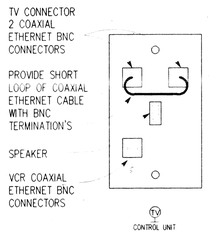

C EC1 TYPICAL TELEVISION WALL PLATE ELEVATION
NO SCALE

D EC1 TV PLATE IN COMMUNICATION ROOM ELEVATION CONTROL UNIT
NO SCALE

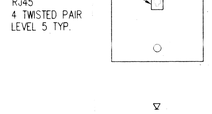



E EC1 TYPICAL DATA WALL PLATE ELEVATION
NO SCALE

F EC1 TYPICAL DATA CONNECTION INSTALLED IN FLOOR BOX
NO SCALE

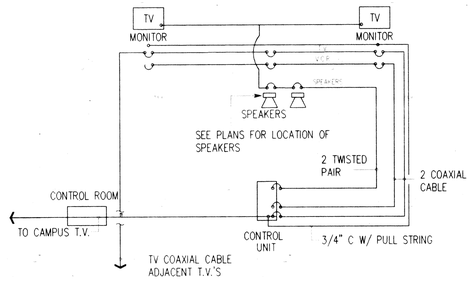

CONTROL UNIT LAYOUT
N.T.S.

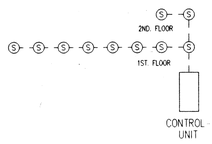

SPEAKER LAYOUT
N.T.S.

AS BUILT
CORRECTIONS BY HAF
CONTACT NO.
DATE OCT 31 97

REVISION	DATE	DESCRIPTION	INITIAL

ISSUE FOR PROGRESS REVIEW	09/18/95
ISSUE FOR PLAN CHECK	G.R.S.10/9/95
ISSUE FOR PERMIT	04/04/96
ISSUE FOR BID	4/4/96
ISSUE FOR CONSTRUCTION	

SEAL:

LICENSED ARCHITECT PAUL D. CRAWFORD No. C 14,225 REN. 10-31-97 STATE OF CALIFORNIA

CONSULTANT:

INTERACTIVE RESOURCES
ARCHITECTURE • PLANNING • ENGINEERING
117 PARK PLACE
POINT RICHMOND
CALIFORNIA 94801
(510) 236-7435
(FAX) 232-5325

PROJECT:

STUDENT UNION

Diablo Valley College
321 Golf Club Road
Pleasant Hill, CA. 94523

Contra Costa Community College District

STAMP:

gp LV GR 4-17-96

APPL. NUMBER:

KEY PLAN:

10/31/97

SHEET TITLE:

ELECTRICAL COMMUNICATION 1ST. FLOOR PLAN

SCALE	AS NOTED
PROJ. NO.	A94087.04

PREPARATION AND REVIEW		
PURPOSE	PERSONAL/INITIAL	DATE
DRAWN BY	IRI	09/18/95
PROJ. MGR.	GYN	09/18/95
PEER REVIEW		

SHEET NUMBER:

EC 1

NUMBER: OF:

L:\A94087.04\CADD\EC1.DWG

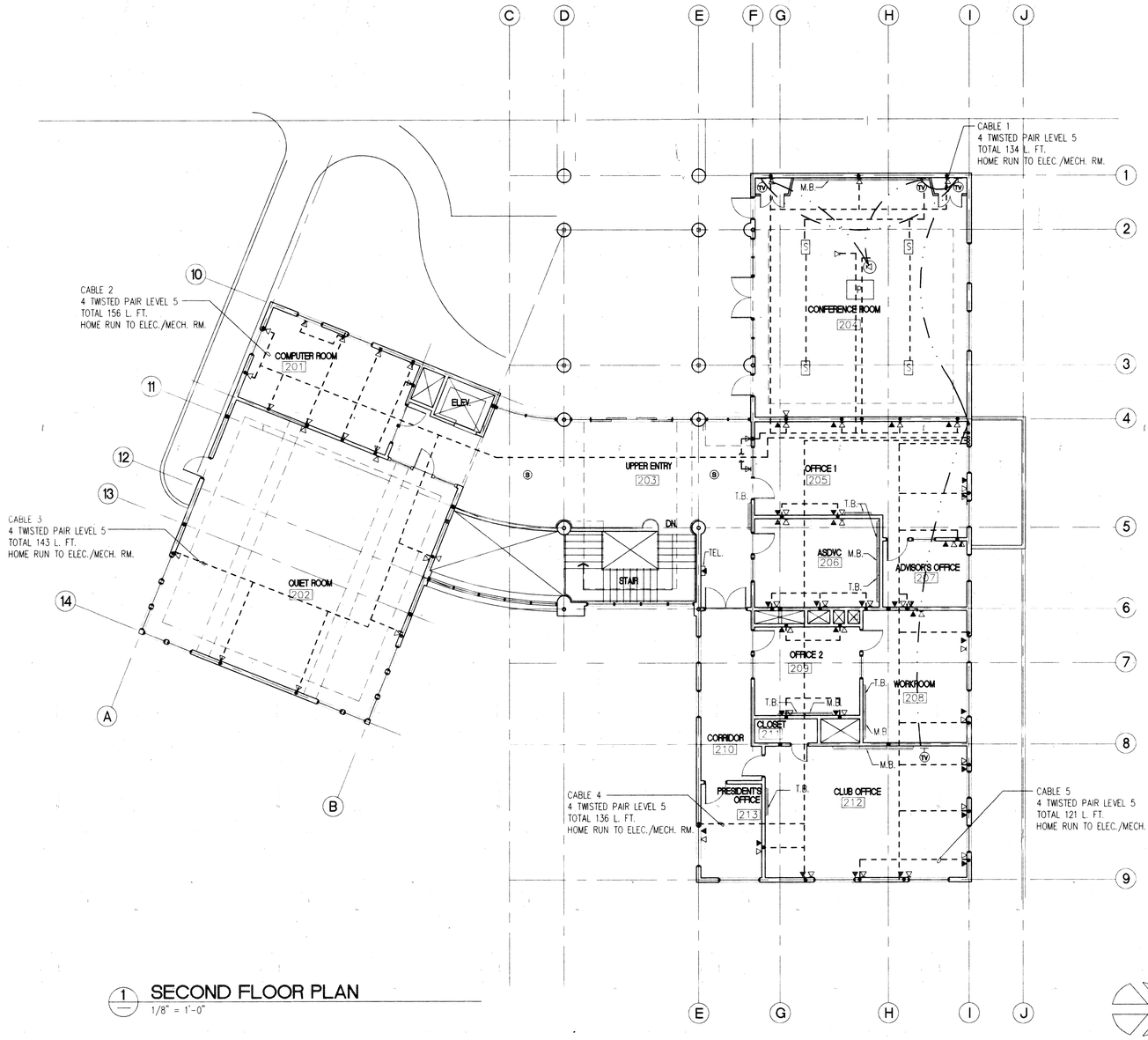

1 SECOND FLOOR PLAN
1/8" = 1'-0"

SHEET NOTES

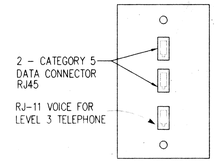

A / EC1 TYPICAL TELEPHONE/DATA WALL PLATE ELEVATION
NO SCALE

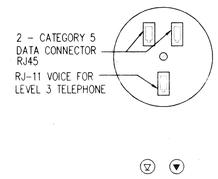

B / EC1 TYPICAL TELEPHONE/DATA CONNECTION INSTALLED IN FLOOR BOX
NO SCALE

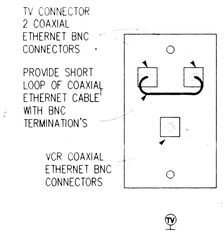

C / EC1 TYPICAL TELEVISION WALL PLATE ELEVATION
NO SCALE

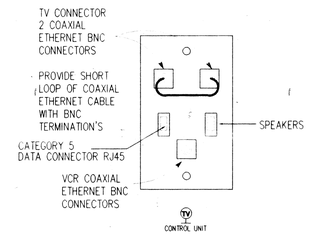

D / EC1 TV PLATE IN COMMUNICATION ROOM ELEVATION
CONTROL UNIT NO SCALE

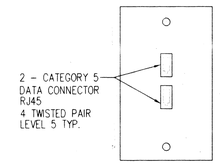

E / EC1 TYPICAL DATA WALL PLATE ELEVATION
NO SCALE

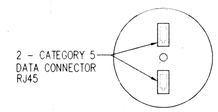

F / EC1 TYPICAL DATA CONNECTION INSTALLED IN FLOOR BOX
NO SCALE

LEGEND

- MAIN FRAME
- COMPUTER OUTLET
- COMPUTER OUTLET IN FLOOR BOX
- TELEPHONE OUTLET
- TELEPHONE OUTLET IN FLOOR BOX
- 2 TWISTED PAIR CABLE
- COAXIAL CABLE
- CONDUIT UP
- CONDUIT DOWN
- SPEAKER
- TELEVISION OUTLET

GENERAL NOTES:

1. CABLE RUNS IN EXCESS OF TEN (10) CABLES SHALL BE SUPPORTED BY J-HOOKS.
2. NOT USED
3. ALL 10-BASE-T COMPONENTS SHALL BE CATEGORY 5 COMPLIANT.
4. NO 10-BASE -T CABLE RUN SHALL EXCEED 295 FEET INCLUDING LINE CORD.
5. NOT USED
6. 10-BASE-T JACKS AND PATCH PANELS SHALL BE TERMINATED ACCORDING TO T568B AND TSB40 STANDARDS.
7. ALL CABLES SHALL BE ROUTED WITHIN THE UPPER 25% OF THE CEILING SPACE.
8. JACKS SHOWN ADJACENT TO ONE ANOTHER SHALL BE COMBINED INTO ONE PLATE.
9. JACKS ON MODULAR FURNITURE SHALL BE SURFACE MOUNTED TO THE UNDERSIDE OF THE WORK SURFACE.
10. UTP CABLE SHALL BE ROUTED WELL CLEAR OF FLUORESCENT LIGHT FIXTURES, ELECTRIC MOTORS, ELEVATORS, AND OTHER SOURCES OF ELECTRICAL INTERFERENCE.
11. CONTRACTOR AND ARCHITECT TO COORDINATE LOCATION AND ORIENTATION OF EQUIPMENT RACK IN DATA CLOSET WITH DISTRICT.

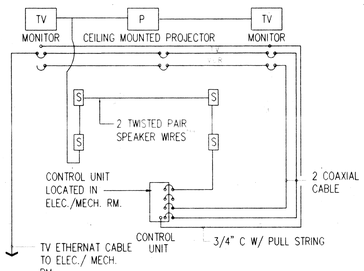

CONTROL UNIT LAYOUT
N.T.S.

AS BUILT
CORRECTIONS BY HAF
CONTR
DATE OCT 31 97

REVISION	DATE	DESCRIPTION	INITIAL

ISSUE FOR PROGRESS REVIEW	09/18/95
ISSUE FOR PLAN CHECK	O.R.S.10/9/95
ISSUE FOR PERMIT	04/04/96
ISSUE FOR BID	4/4/96
ISSUE FOR CONSTRUCTION	

SEAL:
LICENSED ARCHITECT PAUL D. CIANCHETTA No. C 14,225 REN. 10-31-97 STATE OF CALIFORNIA

CONSULTANT:

INTERACTIVE RESOURCES
ARCHITECTURE • PLANNING • ENGINEERING
117 PARK PLACE
POINT RICHMOND
CALIFORNIA 94801
(510) 236-7335
(FAX) 232-5325

PROJECT:
STUDENT UNION

Diablo Valley College
321 Golf Club Road
Pleasant Hill, CA. 94523

Contra Costa Community College District

STAMP:

GR 4-17-96

APPL. NUMBER:

KEY PLAN:

10/31/97

SHEET TITLE:

ELECTRICAL COMMUNICATIONS 2ND. FLOOR PLAN

SCALE	AS NOTED
PROJ. NO.	A94087.04

PREPARATION AND REVIEW		
PURPOSE	PERSONAL/INITIAL	DATE
DRAWN BY	IRI	09/18/95
PROJ. MGR.	GYN	09/18/95
PEER REVIEW		

SHEET NUMBER:

EC 2

NUMBER: OF:

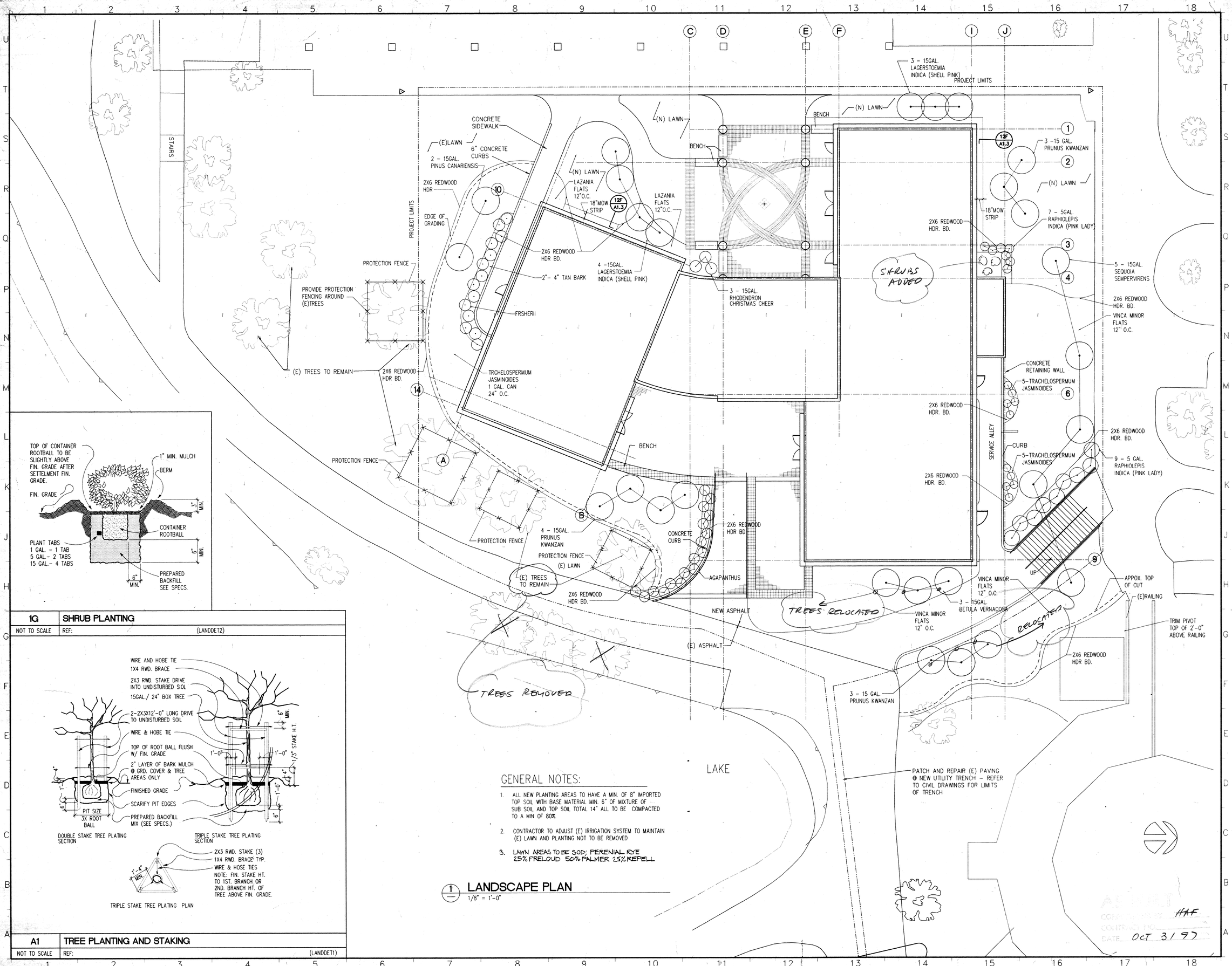

1G	SHRUB PLANTING
NOT TO SCALE	REF: (LANDDET2)

A1	TREE PLANTING AND STAKING
NOT TO SCALE	REF: (LANDDET1)

GENERAL NOTES:

1. ALL NEW PLANTING AREAS TO HAVE A MIN. OF 8" IMPORTED TOP SOIL WITH BASE MATERIAL MIN. 6" OF MIXTURE OF SUB SOIL AND TOP SOIL TOTAL 14" ALL TO BE COMPACTED TO A MIN OF 80%
2. CONTRACTOR TO ADJUST (E) IRRIGATION SYSTEM TO MAINTAIN (E) LAWN AND PLANTING NOT TO BE REMOVED
3. LAWN AREAS TO BE SOD; PERENIAL RYE 25% PRELOUD 50% PALMER 25% REPELL

1/1 LANDSCAPE PLAN

1/8" = 1'-0"

REVISION	DATE	DESCRIPTION	INITIAL

ISSUE FOR PROGRESS REVIEW	09/18/95
ISSUE FOR PLAN CHECK	O.R.S.10/9/95
ISSUE FOR PERMIT	04/04/96
ISSUE FOR BID	4/4/96
ISSUE FOR CONSTRUCTION	

SEAL:

LICENSED ARCHITECT PAUL S. CRAMPTON No. C 14,225 REN. 10-31-97 STATE OF CALIFORNIA

CONSULTANT:

INTERACTIVE RESOURCES

ARCHITECTURE • PLANNING • ENGINEERING

117 PARK PLACE
POINT RICHMOND
CALIFORNIA 94801
(510) 236-7435
(FAX) 232-5325

PROJECT:

STUDENT UNION

Diablo Valley College
321 Golf Club Road
Pleasant Hill, CA. 94523

Contra Costa Community College District

STAMP:

APPROVED
APR 04 1996
CONTRA COSTA COUNTY
DEPT. OF CONSTRUCTION
qwd LS GR
4-18-96

APPL. NUMBER:

KEY PLAN:

LICENSED ARCHITECT PAUL S. CRAMPTON No. C 14,225 REN. 10-31-97 STATE OF CALIFORNIA
10/31/97

SHEET TITLE:

LANDSCAPE PLAN AND DETAILS

SCALE	1/8" = 1'-0"
PROJ. NO.	A94087.04

PREPARATION AND REVIEW

PURPOSE	PERSONAL/INITIAL	DATE
DRAWN BY	IRI	09/18/95
PROJ. MGR.	GYN	09/18/95
PEER REVIEW	TKB	04/11/96

SHEET NUMBER:

L 1.0

NUMBER: OF:

HAF
CONTRACTOR
DATE OCT 31 97

L:\A\94087.04\DWG\L1.0.DWG

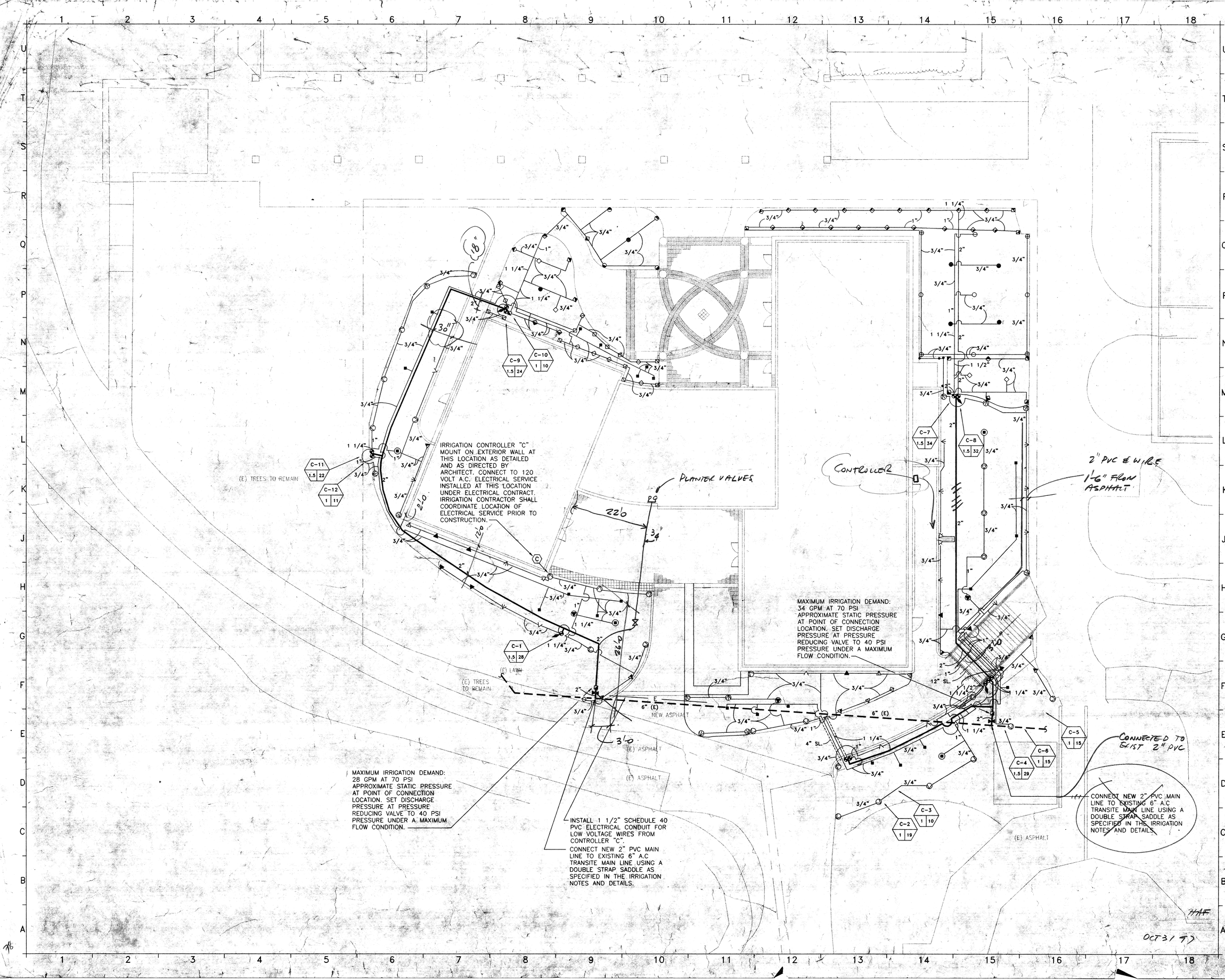

ISSUE FOR PROGRESS REVIEW
ISSUE FOR PLAN CHECK
ISSUE FOR PERMIT
ISSUE FOR BID
ISSUE FOR CONSTRUCTION 4/4/96

LICENSED ARCHITECT PAUL D. CIAMPICHI C-5310 REGISTERED DATE STATE OF CALIFORNIA

CONSULTANT:

Irrigation Consultant:
Russell D. Mitchell & Associates, Inc.
2760 Camino Diablo
Walnut Creek, CA 94596
(510) 935-2660
(510) 935-5671 FAX

INTERACTIVE RESOURCES
ARCHITECTURE • PLANNING • ENGINEERING
117 PARK PLACE
POINT RICHMOND
CALIFORNIA 94801
(510) 236-7435
(FAX.) 232-5325

PROJECT:

STUDENT UNION

Diablo Valley College
321 Golf Club Road
Pleasant Hill, CA. 94523

Contra Costa
Community College District

STAMP:

APPL. NUMBER:

KEY PLAN:

LICENSED ARCHITECT PAUL D. CIAMPICHI 10/31/97

SHEET TITLE:

IRRIGATION PLAN

1/8" = 1'-0"
A94087.04

PREPARATION AND REVIEW

PURPOSE	PERSONAL/INITIAL	DATE
	IRI	09/18/95
	GYN	
	XXX	XX/XX/XX

SHEET NUMBER:

L
2.0

IRRIGATION NOTES

1. THESE IRRIGATION DRAWINGS ARE DIAGRAMMATIC AND INDICATIVE OF THE WORK TO BE INSTALLED. ALL PIPING, VALVES, ETC. SHOWN WITHIN PAVED AREAS IS FOR CLARITY ONLY AND ARE TO BE INSTALLED WITHIN PLANTING AREAS WHERE POSSIBLE. DUE TO THE SCALE OF THE DRAWINGS, IT IS NOT POSSIBLE TO INDICATE ALL OFFSETS, FITTINGS, SLEEVES, ETC. WHICH MAY BE REQUIRED. THE CONTRACTOR IS REQUIRED TO INVESTIGATE THE STRUCTURAL AND FINISHED CONDITIONS AFFECTING ALL OF THE CONTRACT WORK INCLUDING OBSTRUCTIONS, GRADE DIFFERENCES OR AREA DIMENSIONAL DIFFERENCES WHICH MAY NOT HAVE BEEN CONSIDERED IN THE ENGINEERING. IN THE EVENT OF FIELD DIFFERENCES, THE CONTRACTOR IS REQUIRED TO PLAN THE INSTALLATION WORK ACCORDINGLY BY NOTIFICATION AND APPROVAL OF THE DISTRICT'S AUTHORIZED REPRESENTATIVE AND ACCORDING TO THE CONTRACT SPECIFICATIONS. THE CONTRACTOR IS ALSO REQUIRED TO NOTIFY AND COORDINATE IRRIGATION CONTRACT WORK WITH ALL APPLICABLE CONTRACTORS FOR THE LOCATION AND INSTALLATION OF PIPE, CONDUIT OR SLEEVES THROUGH OR UNDER WALLS, ROADWAYS, PAVING, STRUCTURE, ETC. BEFORE CONSTRUCTION. IN THE EVENT THESE NOTIFICATIONS ARE NOT PERFORMED, THE CONTRACTOR SHALL ASSUME FULL RESPONSIBILITY FOR ALL REQUIRED REVISIONS.

2. THE INTENT OF THIS IRRIGATION SYSTEM IS TO PROVIDE THE MINIMUM AMOUNT OF WATER REQUIRED TO SUSTAIN GOOD PLANT HEALTH.

3. IT IS THE RESPONSIBILITY OF THE LANDSCAPE MAINTENANCE CONTRACTOR AND/OR DISTRICT TO PROGRAM THE IRRIGATION CONTROLLER TO PROVIDE THE MINIMUM AMOUNT OF WATER NEEDED TO SUSTAIN GOOD PLANT HEALTH. THIS INCLUDES MAKING ADJUSTMENTS TO THE PROGRAM FOR SEASONAL WEATHER CHANGES, PLANT MATERIAL, WATER REQUIREMENTS, MOUNDS AND SLOPES, SUN, SHADE AND WIND EXPOSURES.

4. 120 VOLT A.C. (2.5 AMP DEMAND PER CONTROLLER) ELECTRICAL SERVICE TO IRRIGATION CONTROLLER LOCATION TO BE PROVIDED UNDER ELECTRICAL CONTRACT WORK. IRRIGATION CONTRACTOR TO MAKE FINAL CONNECTION FROM ELECTRICAL STUB-OUT TO CONTROLLER AND PROVIDE PROPER GROUNDING PER CONTROLLER MANUFACTURER'S INSTRUCTIONS.

5. INSTALL NEW BATTERIES IN IRRIGATION CONTROLLER TO RETAIN PROGRAM IN MEMORY DURING TEMPORARY POWER FAILURES. USE QUANTITY, TYPE, AND SIZE REQUIRED AS PER CONTROLLER MANUFACTURER'S INSTRUCTIONS.

6. THE IRRIGATION CONTRACTOR SHALL SCHEDULE A MEETING WHICH INCLUDES REPRESENTATIVES OF THE IRRIGATION CONTROLLER MANUFACTURER, THE MAINTENANCE CONTRACTOR, THE DISTRICT AND THE IRRIGATION CONTRACTOR AT THE SITE FOR INSTRUCTION ON THE PROPER PROGRAMMING AND OPERATION OF THE IRRIGATION CONTROLLER.

7. IRRIGATION CONTROL WIRES SHALL BE COPPER WITH U.L. APPROVAL FOR DIRECT BURIAL IN GROUND, SIZE #14-1. COMMON GROUND WIRE SHALL HAVE WHITE INSULATING JACKET. CONTROL WIRE SHALL HAVE INSULATING JACKET OF COLOR OTHER THAN WHITE. SPLICE SHALL BE MADE WITH 3M-DBY SEAL PACKS.

8. INSTALL SPARE CONTROL WIRE ALONG THE ENTIRE WIRE ROUTING FOR THE CONTROLLER. LOOP 36" EXCESS WIRE INTO EACH SINGLE VALVE BOX AND INTO ONE VALVE BOX IN EACH GROUP OF VALVES.

9. SPLICING OF 24 VOLT WIRES IS NOT PERMITTED EXCEPT IN VALVE BOXES. LEAVE A 36" LONG, 1" DIAMETER COIL OF EXCESS WIRE AT EACH SPLICE AND A 36" LONG EXPANSION LOOP EVERY 100 FEET ALONG WIRE RUN. TAPE WIRES TOGETHER EVERY TEN FEET. TAPING WIRES IS NOT REQUIRED INSIDE SLEEVES.

10. PLASTIC VALVE BOXES ARE TO BE GREEN IN COLOR WITH BOLT DOWN, NON-HINGED COVER MARKED "IRRIGATION". BOX BODY SHALL HAVE KNOCK OUTS. MANUFACTURER SHALL BE CARSON-BROOKS.

11. INSTALL REMOTE CONTROL VALVE BOXES 12" FROM WALK, CURB, LAWN, HEADER BOARD, BUILDING, OR LANDSCAPE FEATURE. AT MULTIPLE VALVE BOX GROUPS, EACH BOX SHALL BE AN EQUAL DISTANCE FROM THE WALK, CURB, LAWN, ETC. AND EACH BOX SHALL BE 12" APART. SHORT SIDE OF RECTANGULAR VALVE BOXES SHALL BE PARALLEL TO WALK, CURB, LAWN, ETC.

12. VALVE LOCATIONS SHOWN ARE DIAGRAMMATIC. INSTALL IN GROUND COVER/SHRUB AREAS WHERE POSSIBLE (NOT IN LAWN AREA)

13. THE IRRIGATION CONTRACTOR SHALL FLUSH AND ADJUST ALL SPRINKLER HEADS FOR OPTIMUM PERFORMANCE AND TO PREVENT OVER SPRAY ONTO WALKS, ROADWAYS, AND/OR BUILDINGS AS MUCH AS POSSIBLE. THIS SHALL INCLUDE SELECTING THE BEST DEGREE OF ARC TO FIT THE EXISTING SITE CONDITIONS AND TO THROTTLE THE FLOW CONTROL AT EACH VALVE TO OBTAIN THE OPTIMUM OPERATING PRESSURE FOR EACH SYSTEM.

14. ALL SPRINKLER HEADS SHALL BE SET PERPENDICULAR TO FINISH GRADE OF THE AREA TO BE IRRIGATED UNLESS OTHERWISE NOTED ON THE DRAWINGS.

15. LOCATE BUBBLERS ON UP-HILL SIDE OF TREE.

16. AT LOCATIONS WHERE LOW SPRINKLER HEAD DRAINAGE WILL CAUSE EROSION AND/OR EXCESS WATER, USE A RAIN BIRD 1800-SAM SERIES POP-UP BODY WITH INTEGRAL CHECK VALVE.

17. THE SPRINKLER SYSTEM DESIGN IS BASED ON THE MINIMUM OPERATING PRESSURE SHOWN ON THE IRRIGATION DRAWINGS. THE IRRIGATION CONTRACTOR SHALL VERIFY WATER PRESSURE PRIOR TO CONSTRUCTION. REPORT ANY DIFFERENCE BETWEEN THE WATER PRESSURE INDICATED ON THE DRAWINGS AND THE ACTUAL PRESSURE READING AT THE IRRIGATION POINT OF CONNECTION TO THE DISTRICT'S AUTHORIZED REPRESENTATIVE.

18. IRRIGATION DEMAND: 34 GPM AT 40 PSI AFTER THE PRESSURE REDUCING VALVE. STATIC PRESSURE IN THE TRANSITE MAIN IS APPROXIMATELY 70 PSI.

19. THE EXISTING MAIN LINE SHOWN ON THE DRAWINGS IS DIAGRAMMATIC. CONTRACTOR TO VERIFY AND LOCATE EXISTING MAIN LINE IN FIELD. ANY DEVIATION OF EXISTING MAIN LINE LOCATION AS SHOWN ON THE DRAWINGS IS TO BE REPORTED TO ARCHITECT FOR REVIEW AND POSSIBLE REVISION.

20. AT POINTS OF CONNECTION AT EXISTING TRANSITE MAIN LINE USE A SMITH-BLAIR SADDLE, MODEL 317 WITH REQUIRED TAPPED OUTLET SIZE.

21. PIPE THREAD SEALANT COMPOUND SHALL BE PERMATEX 51 OR RECTOR SEAL T+2.

22. THIS IRRIGATION SYSTEM INTERFACES WITH AN EXISTING IRRIGATION SYSTEM WHICH IS TO REMAIN IN SERVICE. THE EXISTING UNDERGROUND IRRIGATION EQUIPMENT AND OTHER UTILITIES HAVE NOT BEEN FIELD VERIFIED UNDER THE CONSTRUCTION DOCUMENT PHASE OF WORK. THE CONTRACTOR IS TO FIELD VERIFY THE LOCATION OF EXISTING IRRIGATION MAIN LINE PIPING, LATERAL LINE PIPING, LOW VOLTAGE AND HIGH VOLTAGE WIRE, COMMUNICATION CABLE, AND VALVES BEFORE CONSTRUCTION IS STARTED. DAMAGE TO THE EXISTING IRRIGATION SYSTEM AND OTHER VARIOUS UTILITIES SHALL BE REPAIRED BY THE CONTRACTOR AT NO ADDITIONAL EXPENSE TO THE DISTRICT. THE CONTRACTOR IS RESPONSIBLE FOR MAINTAINING THE CURRENT OPERATION OF THE EXISTING IRRIGATION SYSTEM WHICH SERVICES AREAS OUTSIDE OF THE CONTRACT WORK AREA. DO NOT SHUT DOWN GATE VALVES, SEVER MAIN OR LATERAL PIPING, AND/OR SEVER WIRE WHICH ORIGINATES IN OR TRAVELS THROUGH THIS CONTRACT WORK AREA UNLESS SPECIFICALLY DIRECTED TO DO SO BY THE CONTRACT DOCUMENTS OR BY WRITTEN APPROVAL FROM THE ARCHITECT. LANDSCAPE STRESS OUTSIDE OF THIS CONTRACT AREA WILL REQUIRE FULL REPLACEMENT OF THE LANDSCAPE DAMAGED UNDER THIS CONTRACT WORK AT NO ADDITIONAL EXPENSE TO THE DISTRICT. IF THE CONTRACTOR IS NOT AGREEABLE TO THIS CONDITION THEN THE CONTRACTOR MUST STATE THIS IN THE BID PROPOSAL DOCUMENTS.

IRRIGATION LEGEND

SYMBOL	NUMBER	DESCRIPTION	PSI	RADIUS (FEET)	NOZZLE GPM
○ ⊖ ⊕	1804-15F,H,Q	RAIN BIRD POP-UP SPRAY SPRINKLER (LAWN)	30	15	3.7,1.9,.9
◒	1804-12 VAN	RAIN BIRD POP-UP SPRAY SPRINKLER (LAWN)	30	12	1.1
●	1804-10 F-LA	RAIN BIRD POP-UP SPRAY SPRINKLER (LAWN)	30	10	1.6
◒	1804-10 VAN	RAIN BIRD POP-UP SPRAY SPRINKLER (LAWN)	30	10	1.2
◇	1804-8 F-FLT	RAIN BIRD POP-UP SPRAY SPRINKLER (LAWN)	30	8	1.6
◒	1804-8 VAN	RAIN BIRD POP-UP SPRAY SPRINKLER (LAWN)	30	8	1.2
∨	1812-15 H	RAIN BIRD POP-UP SPRAY SPRINKLER (SHRUB)	30	15	1.9
ⓥ	1812-15 VAN	RAIN BIRD POP-UP SPRAY SPRINKLER (SHRUB)	30	15	2.1
◬ ∨ ▽	1812-12 F,H,Q	RAIN BIRD POP-UP SPRAY SPRINKLER (SHRUB)	30	12	2.6,1.3,.7
ⓥ	1812-12 VAN	RAIN BIRD POP-UP SPRAY SPRINKLER (SHRUB)	30	12	1.1
⦿ ▼	1812-10 F,H-LA	RAIN BIRD POP-UP SPRAY SPRINKLER (SHRUB)	30	10	1.6,.8
▼	1812-10 VAN	RAIN BIRD POP-UP SPRAY SPRINKLER (SHRUB)	30	10	1.2
◬	1812-8 F-FLT	RAIN BIRD POP-UP SPRAY SPRINKLER (SHRUB)	30	8	1.6
▽	1812-8 VAN	RAIN BIRD POP-UP SPRAY SPRINKLER (SHRUB)	30	8	1.2
◈	1812-6 VAN	RAIN BIRD POP-UP SPRAY SPRINKLER (SHRUB)	30	6	.6
◈	1812-4 VAN	RAIN BIRD POP-UP SPRAY SPRINKLER (SHRUB)	30	4	.5
•	1812-15 EST	RAIN BIRD POP-UP STRIP SPRAY SPRINKLER (SHRUB)	30	4X15	.6
■	1804-PA-80-1404	RAIN BIRD POP-UP BUBBLER (TREE)	30	FLOOD	1.0
◉	PEB-SERIES	RAIN BIRD REMOTE CONTROL VALVE			
◆	33 DNP	RAIN BIRD QUICK COUPLING VALVE			
⋈	T-311	NIBCO ISOLATION VALVE (LINE SIZE)			
◪	600HLR-2"	WILKINS PRESSURE REDUCING VALVE			
ⓒ	RC-1260C	RAIN BIRD CONTROLLER (WALL MOUNT)			

CHANGED TO ELECTRONIC TYPE

CONTROLLER AND STATION NUMBER

FLOW (GPM)

REMOTE CONTROL VALVE SIZE (IN INCHES)

MAIN LINE: 1120-SCHEDULE 40 PVC PLASTIC PIPE WITH SCHEDULE 40 PVC SOLVENT WELD FITTINGS. 18" COVER.

LATERAL LINE: 1120-CL. 200 PVC PLASTIC PIPE WITH SCHEDULE 40 PVC SOLVENT WELD FITTINGS. 12" COVER.

SLEEVING: 1120-CL. 200 PVC PLASTIC PIPE. COVER TO BE AS INDICATED IN SPECIFICATIONS OR AS INDICATED ABOVE FOR PIPE DEPTH OF COVER.

HAF
OCT 31 '95

ISSUE FOR PROGRESS REVIEW
ISSUE FOR PLAN CHECK
ISSUE FOR PERMIT
ISSUE FOR BID 4/4/96
ISSUE FOR CONSTRUCTION

(0134)

Irrigation Consultant:
Russell D. Mitchell & Associates, Inc.
2740 Camino Ramon
Walnut Creek, CA 94596
(510) 935-3988
(510) 935-3871 FAX

INTERACTIVE
RESOURCES
117 PARK PLACE
POINT RICHMOND
CALIFORNIA 94801
(510) 236-7435
(FAX.) 232-5325

STUDENT UNION

Diablo Valley College
321 Golf Club Road
Pleasant Hill, CA. 94523

Contra Costa
Community College District

CHK LS GR
4-17-96

IRRIGATION NOTES AND LEGEND

NONE
A94087.04

PURPOSE	PREPARATION AND REVIEW PERSONAL/INITIAL	DATE
	IRI	09/18/95
	GYN	
	XXX	XX/XX/XX

L
2.1

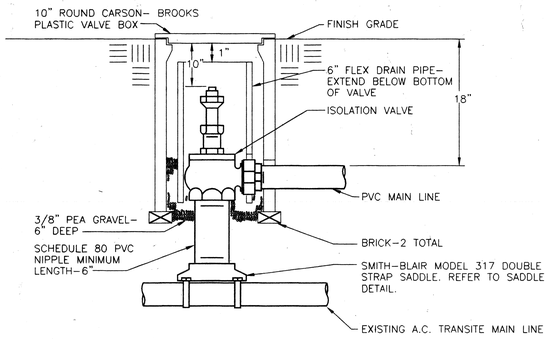

ISOLATION VALVE DETAIL
NOT TO SCALE

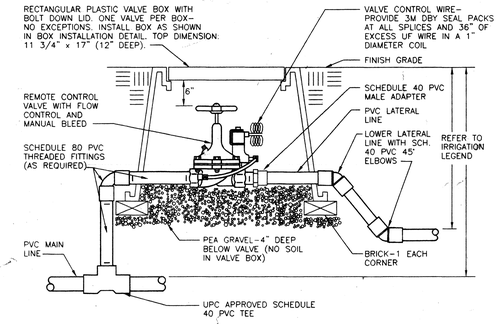

REMOTE CONTROL VALVE DETAIL
NOT TO SCALE

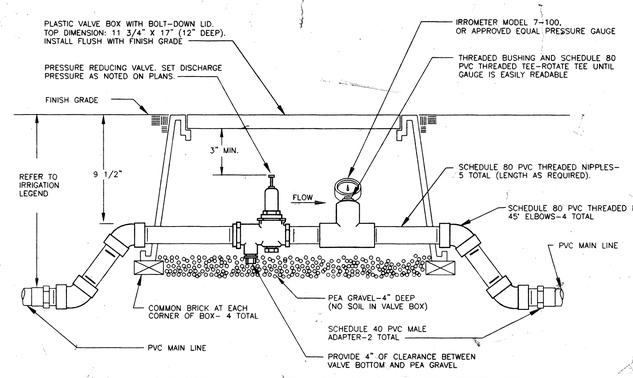

PRESSURE REDUCING VALVE DETAIL
NOT TO SCALE

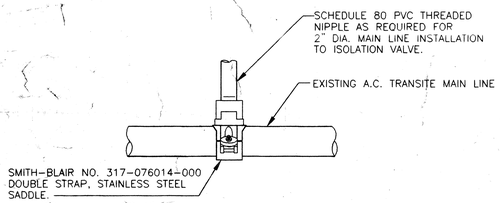

SADDLE CONNECTION DETAIL
NOT TO SCALE

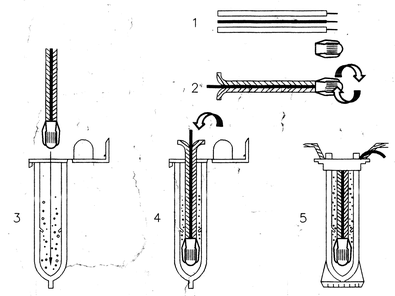

INSTRUCTIONS:
1. STRIP WIRES APPROXIMATELY 1/2" (12.7 MM) TO EXPOSE WIRE.
2. TWIST CONNECTOR AROUND WIRES CLOCKWISE UNTIL HAND TIGHT. DO NOT OVERTIGHTEN.
3. INSERT WIRE ASSEMBLY INTO PLASTIC TUBE UNTIL WIRE CONNECTOR SNAPS PAST LIP IN BOTTOM OF TUBE.
4. PLACE WIRES WHICH EXIT TUBE IN WIRE EXIT HOLES AND CLOSE CAP UNTIL IT SNAPS.
5. INSPECT FINAL SPLICE ASSEMBLY TO BE SECURE AND FINISHED.

WEATHERPROOF SPLICE ASSEMBLY DETAIL
NOT TO SCALE

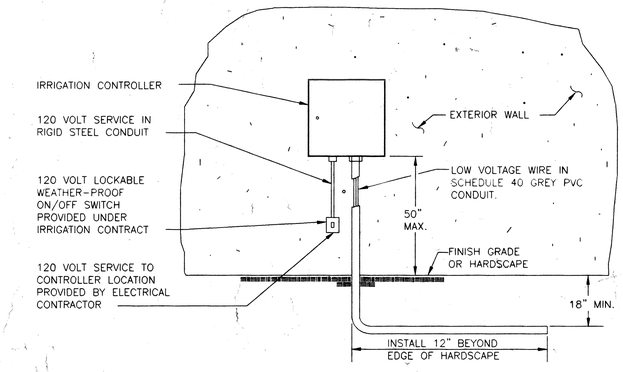

EXTERIOR MOUNTED CONTROLLER DETAIL
NOT TO SCALE

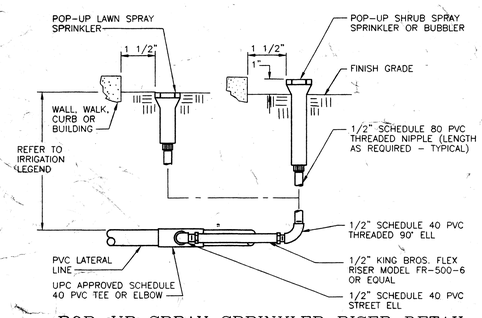

POP-UP SPRAY SPRINKLER RISER DETAIL
NOT TO SCALE

NOTE: NIPPLES AND FITTINGS TO BE SAME SIZE AS VALVE IPT INLET THREAD SIZE.

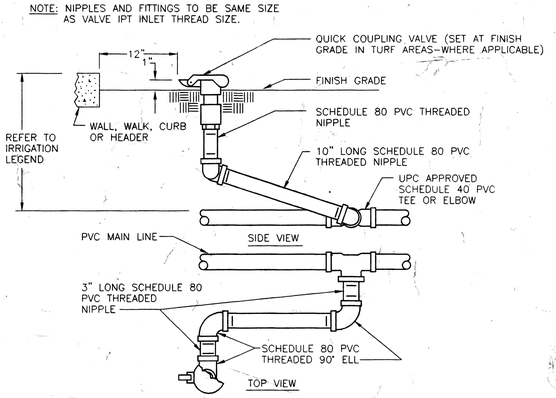

QUICK COUPLING VALVE DETAIL
NOT TO SCALE

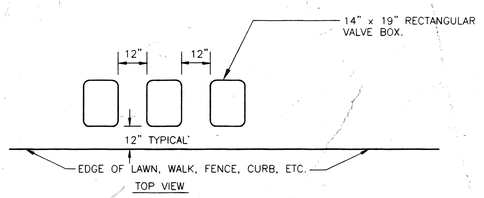

1. CENTER VALVE BOX OVER REMOTE CONTROL VALVE TO FACILITATE SERVICING VALVE.
2. SET BOXES 1" ABOVE FINISH GRADE OR MULCH COVER IN GROUND COVER/SHRUB AREA AND FLUSH WITH FINISH GRADE IN TURF AREA.
3. SET RCV AND VALVE BOX ASSEMBLY IN GROUND COVER/SHRUB AREA WHERE POSSIBLE. INSTALL IN LAWN ONLY IF GROUND COVER DOES NOT EXIST ADJACENT TO LAWN.
4. SET BOXES PARALLEL TO EACH OTHER AND PERPENDICULAR TO EDGE OF LAWN, WALK, FENCE, CURB, ETC.
5. AVOID HEAVILY COMPACTING SOIL AROUND VALVE BOXES TO PREVENT COLLAPSE AND DEFORMATION OF VALVE BOX SIDES.
6. INSTALL EXTENSION BY VALVE BOX MANUFACTURER AS REQUIRED TO COMPLETELY ENCLOSE ASSEMBLY FOR EASY ACCESS.

VALVE BOX INSTALLATION
NOT TO SCALE

HALF
Oct 31 97

ISSUE FOR PROGRESS REVIEW
ISSUE FOR PLAN CHECK
ISSUE FOR PERMIT
ISSUE FOR BID 4/4/97
ISSUE FOR CONSTRUCTION

Irrigation Consultant:
Russell D. Mitchell & Associates, Inc.
2760 Camino Diablo, Suite 205
Walnut Creek, CA 94596
(510) 932-3677 Fax 932-3697

INTERACTIVE RESOURCES
117 PARK PLACE
POINT RICHMOND
CALIFORNIA 94801
(510) 236-7435
(FAX.) 232-5325

STUDENT UNION

Diablo Valley College
321 Golf Club Road
Pleasant Hill, CA. 94523

Contra Costa
Community College District

LS GR 4-17-96

IRRIGATION DETAILS

NONE
A94087.04

PREPARATION AND REVIEW		
PURPOSE	PERSONAL/INITIAL	DATE
	IRI	09/18/95
	GYN	
	XXX	XX/XX/XX

L
2.2