PROJECT NOTES:

CHAPTER 4, PART 1, TITLE 24, CCR, ADMINISTRATIVE REQUIREMENTS (PARTIAL LISTING ONLY)

1.) A Copy of Parts 1 & 2, Title 24, CCR shall be kept on the job site at all times.
2.) All Change Orders and Addenda to be signed by the Architect and Owner and Approved by DSA. Change Orders are not valid until approved by DSA per Section 4–338, Part 1, Title 24.
3.) All test to conform to the requirements of Section 4–335, Part 1, Title 24 and approved Testing and Inspections sheet.
4.) Test of Materials and testing laboratory shall be in accordance with Section 4–335 of Part 7, Title 24, and the District shall employ and pay the laboratory. Costs of Re–test maybe back charged to the contractor.
5.) DSA shall be notified at the start of Construction and prior to the placement of concrete per Section 4–331, Part 1, Title 24.
6.) Inspector shall be approved by DSA. Inspection shall be in Accordance with Section 4–339(b) and 4–342 Part 1, Title 24.
7.) Supervision of Construction by DSA shall be in accordance with Section 4–334, Part 1, Title 24.
8.) Contractor, Inspector, Architect, and Engineers shall submit verified reports (Form SSS–6) in accordance with Section4–336 and 4–343, Part 1, Title 24.
9.) The Architect and the Structural Engineer shall perform their duties in accordance with Section 4–343, part 1, Title 24.
10.) The Contractor shall perform his duties in accordance with section 4–343, Part 1, Title 24.
11.) The intent of the drawings and specifications is to construct the new College Bookstore in accordance with Title 24, CCR. Should any conditions develop not covered by the contract documents wherein finished work will not comply with said Title 24, CCR, a change order detailing and specifying the required work shall be submitted to and approved by the office of reguaition services before proceeding with the work.

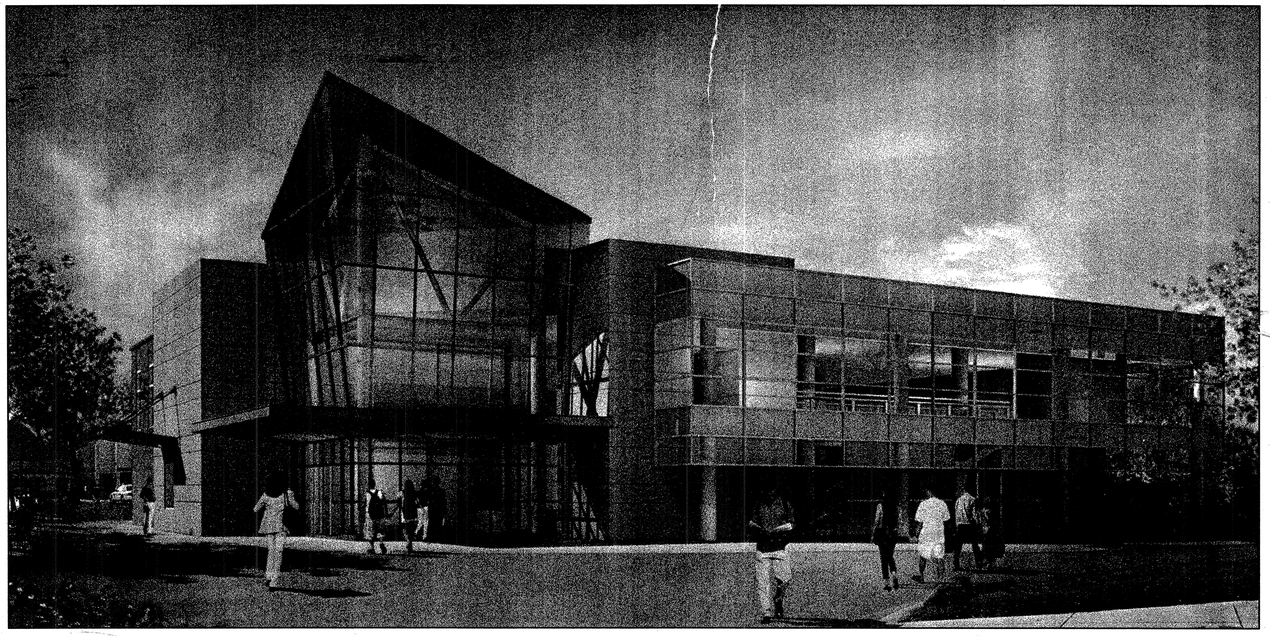

DIABLO VALLEY COLLEGE– NEW COLLEGE BOOKSTORE

Pleasant Hill, California 94523

GOVERNING BUILDING CODES:

The code analysis is based upon the following codes:
2001 California Building Standards Administrative Code (Part 1, Title 24 CCR)

2001 California Building Code Vol 1, 2 &3 (Part 2, Title 24, CCR)

2001 California Electrical Code (Part 3, Title 24 CCR)
(1999 Ed. National Electric Code w/ 2001 California amendments)

2001 California Plumbing Code (Part 5, Title 24 CCR)
(2000 Ed. IAPMO Uniform Plumbing Code w/ 2001 California amendments)

2001 California Energy Code (Part 6, title 24 CCR)

2001 California Elevator Safety Construction Code (Part 7, Title 24 CCR)

2001 California Fire Code (Part 9 Title 24 CCR)

2001 California Referenced Standards Code (Part12 title 24 CCR)

NFPA 13, 1999 Ed., The installation of Automatic Sprinkler systems as amended
NFPA 14, 2000 Ed., The installation of Standpipe, private hydrant and hose systems.
NFPA 24, 1995 Ed., Installation of private fire service mains and their appurtenances
NFPA 72, 1999 Ed., National Fire larm Code, as amended

This project is under DSA jurisdiction. Therefore all DSA ammendments and the DSA Interpretations of Regulations apply to this project.

DEFERRED SUBMITTALS

1.) AUTOMATIC OVERHEAD FIRE SPRINKLER SYSTEM
2.) ELEVATORS: ELEVATOR GUIDE RAILS PER 5/S7.5
3.) CURTAIN WALL SYSTEMS, WHERE APPLICABLE
4.) SKYLIGHTS

APPLICABLE CODES

FOR LIST OF APPLICABLE CODES SEE SHEET T1.0

BSA Architects
A California Corporation
350 PACIFIC AVENUE
SAN FRANCISCO, CA 94111
415–781–1526

DIABLO VALLEY COLLEGE
NEW BOOKSTORE

321 GOLF CLUB RD.
PLEASANT HILL, CALIFORNIA

© 2003 BSA Architects
"All drawings and written material appearing herein constitute the original and unpublished work of the architect and the same may not be duplicated, used, or disclosed without the written consent of the architect."

DATE: 23 JULY, 2004

REVISIONS:
0 REVISIONS– 23 JULY, 2004

LOCATION MAP (*FOR DETAILED CAMPUS MAP SEE 1/A1.1)

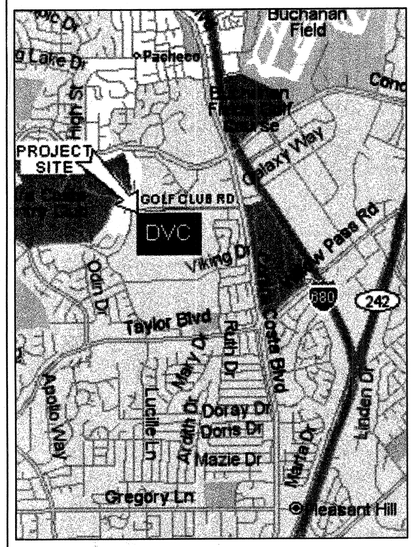

NORTH

DIRECTORY

CLIENT

THE BOOK CENTER
DIABLO VALLEY COLLEGE
321 GOLF CLUB RD.
PLEASANT HILL, CA 94523

CONTACT: BILL MCDONALD
T: 925/685–1230
F: 925/825–7419
E:bmcdonald@dvc.edu

CLIENT

CONTRA COSTA COMMUNITY COLLEGE DISTRICT
500 COURT ST.
MARTINEZ, CA 94553

CONTACT: TOM BECKETT
T: 925/229–1000
F: 925/335–9697
E:tbeckett@4cd.net

ARCHITECTS

BSA ARCHITECTS
350 PACIFIC AVE. SUITE 302
SAN FRANCISCO, CA 94111

CONTACT: GERARD LEE
T: 415/781–1526
F: 415/982–1551
E: glee@bsaarchitects.com

STRUCTURAL

DASSE DESIGN, INC.
33 NEW MONTGOMERY STREET,
SUITE 850
SAN FRANCISCO, CA 94105

CONTACT: BILL ANDREWS
T: 415/243–8400 EXT. 274
F: 415/243–9165
E: andrews@dasse.com

ELECTRICAL

O'MAHONY & MYER
4340 REDWOOD HIGHWAY #245
SAN RAFAEL, CA 94903

CONTACT: PAUL CAREY
T: 415/492–0420 EXT. 118
F: 415/479–9662
E: pcarey@ommconsulting.com

MECHANICAL

MECHANICAL DESIGN STUDIO, INC.
1777 OAKLAND BLVD., Ste 210
WALNUT CREEK, CA 94596

CONTACT: DOREL ANGHEL
T: 925/210–0100
F: 925/210–0144
E: dorel@mds–sf.com

LANDSCAPE ARCHITECTS

ROYSTONHANNAMOTO, ALLEY & ABEY
323 GEARY ST., STE.602
SAN FRANCISCO, CA 94102

CONTACT: ADITYA ADVANI
T: 415/861–7900
F: 415/861–7908
E: aditya@rhaa.com

CIVIL

LEPTIEN CRONIN COOPER MORRIS & POORE, INC.
930 ESTUDILLO ST.
MARTINEZ, CA 94553–1620

CONTACT: ALBERT MORRIS
T: 925/228–4218
F: 925/228–4638
E: aam@lcc–inc.com

SOILS

KLEINFELDER
7133 KOLL CENTER PARKWAY,
STE. 100
PLEASANTON, CA 94566

CONTACT: CARRIE FOULK
T: 925/484–1700
F: 925/484–5838
E:cfoulk@kleinfelder.com

SPECIFICATIONS

TOPFLIGHT SPECS.
55 NEW MONTGOMERY ST.
SUITE 805
SAN FRANCISCO, CA 94105

CONTACT: RICHARD FIORY
T: 415/546–6033
F: 415/546–6034
E: fiory@topflightspecs.com

COST ESTIMATOR

DAVIS LANGDON ADAMSON
1395 GARDEN HIGHWAY, SUITE 150
SACRAMENTO, CA 95833

CONTACT: GARY HOLLAND
T: 415/981–1004
F: 415/981–1419
E: gholland@dladamson.com

DRAWING SHEET INDEX

TITLE

T1.0 TITLE SHEET
T1.1 SYMBOLS, CODE ANALYSIS, ABBREVIATIONS
T1.2 EXITING DIAGRAMS

CIVIL

C1.0 EXISTING CONDITIONS
C1.1 GRADING, PAVING, AND DRAINAGE (1 OF 2)
C1.2 GRADING, PAVING, AND DRAINAGE (2 OF 2)
C1.3 UTILITY PLAN
C1.4 DETAILS
C1.5 BUILDING LOCATION PLAN
C1.6 FIRE LANE ROUTE EXHIBIT

LANDSCAPE

L1.0 LAYOUT & CONSTRUCTION PLAN
L1.1 CONSTRUCTION DETAILS
L1.2 CONSTRUCTION DETAILS

L2.0 IRRIGATION PLAN
L2.1 IRRIGATION PLAN

L3.0 PLANTING PLAN
L3.1 PLANTING DETAIL

ARCHITECTURAL

A1.0 ARCHITECTURAL SITE PLAN
A1.1 CAMPUS SITE PLAN
A1.2 SITE DETAILS

A2.0 BASEMENT FLOOR & LOADING DOCK PLAN
A2.1 FIRST FLOOR PLAN & LOADING DOCK ROOF PLAN
A2.2 SECOND FLOOR PLAN
A2.3 ROOF PLAN
A2.4 FIRST FLOOR FINISH PLAN
A2.5 SECOND FLOOR FINISH PLAN

A3.1 EXTERIOR ELEVATIONS
A3.2 EXTERIOR ELEVATIONS
A3.3 EXTERIOR ELEVATIONS

A3.10 BUILDING SECTIONS
A3.11 BUILDING SECTIONS
A3.12 BUILDING SECTIONS
A3.13 BUILDING SECTIONS

A3.20 WALL SECTIONS
A3.21 WALL SECTIONS
A3.22 WALL SECTIONS
A3.23 WALL SECTIONS
A3.24 WALL SECTIONS
A3.25 WALL SECTIONS
A3.26 WALL SECTIONS
A3.27 WALL SECTIONS
A3.28 WALL SECTIONS
A3.29 WALL SECTIONS
A3.30 INTERIOR WALL SECTIONS

A4.1 ENLARGED FLOOR PLANS

A5.1 INTERIOR ELEVATIONS
A5.2 INTERIOR ELEVATIONS
A5.3 INTERIOR ELEVATIONS
A5.4 INTERIOR ELEVATIONS
A5.5 INTERIOR ELEVATIONS
A5.6 INTERIOR ELEVATIONS

A6.0 BASEMENT REFLECTED CEILING PLANS
A6.1 FIRST FLOOR REFLECTED CEILING PLANS
A6.2 SECOND FLOOR REFLECTED CEILING PLANS

A7.1 ENLARGED STAIR & ELEV. PLANS
A7.2 STAIR & ELEV. SECTION
A7.3 ENLARGED STAIR PLANS & SECTION
A7.4 ENLARGED STAIR PLANS & SECTION
A7.5 STAIR SECTION
A7.6 STAIR No. 1 DETAILS
A7.7 STAIR No. 2 & MISC. DETAILS

A8.1 EXTERIOR DETAILS: WALL ASSEMBLIES
A8.2 EXTERIOR DETAILS: FOUNDATION AND BASEMENT
A8.3 EXTERIOR DETAILS
A8.4 EXTERIOR DOOR & WINDOW DETAILS
A8.5 EXTERIOR DOOR & WINDOW DETAILS
A8.6 EXTERIOR DOOR & WINDOW DETAILS
A8.7 EXTERIOR DOOR & WINDOW DETAILS
A8.8 EXTERIOR DETAILS: ROOF
A8.9 EXTERIOR DETAILS: ROOF
A8.10 EXTERIOR DETAILS: ROOF & CANOPY
A8.11 EXTERIOR DETAILS: ROOF & CANOPY

A9.1 PARTITION TYPES & DETAILS
A9.2 PARTITION TYPES & DETAILS
A9.3 INTERIOR DETAILS
A9.4 INTERIOR DETAILS: DOORS AND WINDOWS
A9.5 INTERIOR DETAILS: FLOOR AND MISC.
A9.6 INTERIOR DETAILS: CEILING
A9.7 INTERIOR DETAILS: MISC.
A9.8 INTERIOR DETAILS: DOOR & WINDOW
A9.9 SIGNAGE PLAN
A9.10 SIGNAGE DETAILS

A10.1 CASEWORK: CAFE PLANS & ELEVATIONS
A10.2 CASEWORK DETAILS
A10.3 CASEWORK DETAILS

A11.1 DOOR TYPES & SCHEDULE
A11.2 WINDOW TYPES
A11.3 WINDOW SCHEDULE, LOUVER TYPES & SCHEDULE
A11.4 MATERIALS SCHEDULES
A11.5 ROOM FINISH & EQUIPMENT SCHEDULES

STRUCTURAL

S1.0 GENERAL STRUCTURAL NOTES

S2.0 BASEMENT LEVEL FOUNDATION PLAN
S2.1 FIRST FLOOR FOUNDATION PLAN
S2.2 SECOND FLOOR FRAMING PLAN
S2.3 ROOF FRAMING PLAN

S3.1 BRACED FRAME ELEVATIONS
S3.2 ELEVATIONS
S3.3 ELEVATIONS

S5.1 TYPICAL CONCRETE DETAILS
S5.2 CONCRETE DETAILS
S5.3 CONCRETE DETAILS

S7.1 TYPICAL STEEL DECK DETAILS
S7.2 TYPICAL STEEL FRAMING DETAILS
S7.3 STEEL BRACED FRAME DETAILS
S7.4 STEEL BRACED FRAME DETAILS
S7.5 ELEVATOR AND STAIR DETAILS
S7.6 STEEL DETAILS
S7.7 STEEL DETAILS

S9.1 TYPICAL EXTERIOR STUD DETAILS
S9.2 EXTERIOR STEEL STUD DETAILS

MECHANICAL

M0.1 LEGEND SYMBOLS AND ABBREVIATIONS
M0.2 GENERAL NOTES
M0.3 SCHEDULES
M0.4 SCHEDULES

M2.0 BASEMENT FLOOR PLAN – HVAC
M2.1 FIRST FLOOR PLAN – HVAC
M2.2 SECOND FLOOR PLAN – HVAC
M2.3 ROOF PLAN – HVAC

M3.1 FIRST FLOOR PLAN – PIPING
M3.2 SECOND FLOOR PLAN – PIPING

M4.1 DETAILS
M4.2 DETAILS
M4.3 DETAILS
M4.4 DETAILS

M5.1 PIPING AND CONTROL DIAGRAMS

M6.1 TITLE 24 DOCUMENTATION
M7.1 TITLE 24 DOCUMENTATION
M7.2 TITLE 24 DOCUMENTATION

PLUMBING

P0.1 LEGEND SYMBOLS AND ABBREVIATIONS
P0.2 SCHEDULES AND GENERAL NOTES

P1.0 SITE PLAN – PLUMBING

P2.0 BASEMENT FLOOR PLAN – PLUMBING
P2.1 FIRST FLOOR PLAN – PLUMBING
P2.2 SECOND FLOOR PLAN – PLUMBING
P2.3 ROOF PLAN – PLUMBING

P3.1 DETAILS

ELECTRICAL

E0.1 GENERAL NOTES, SYMBOLS LIST & LIST OF DRAWINGS
E0.2 LIGHTING FIXTURE SCHEDULE
E0.3 TITLE 24 DOCUMENTATION

E1.1 SITE PLAN – ELECTRICAL

E2.1 BASEMENT FLOOR PLAN– LIGHTING
E2.2 FIRST FLOOR PLAN– LIGHTING
E2.3 SECOND FLOOR PLAN– LIGHTING

E3.1 BASEMENT FLOOR PLAN– POWER & SIGNAL
E3.2 FIRST FLOOR PLAN– POWER & SIGNAL
E3.3 SECOND FLOOR PLAN– POWER & SIGNAL

E3.7 ROOF PLAN– ELECTRICAL

E4.1 PARTIAL PLANS

E5.1 POWER SINGLE LINE DIAGRAM
E5.2 TELEPHONE/DATA SYSTEM RISER DIAGRAMS AND DETAILS

E6.1 PANEL SCHEDULES
E6.2 LOW VOLTAGE PANELS & DETAILS
E6.3 TELEPHONE/DATA SCHEDULES AND PARTIAL PLANS

E7.1 DETAILS
E7.2 DETAILS
E7.3 DETAILS
E7.4 DETAILS
E7.5 DETAILS

FE0.1 FIRE ALARM EQUIPMENT LIST, NOTES, & CALCULATIONS
FE3.1 BASEMENT FLOOR PLAN – FIRE ALARM
FE3.2 FIRST FLOOR PLAN – FIRE ALARM
FE3.3 SECOND FLOOR PLAN – FIRE ALARM
FE3.4 ROOF PLAN – ELECTRICAL
FE5.1 FIRE ALARM SINGLE LINE DIAGRAM
FE7.1 FIRE ALARM DETAILS

DISPLAY FURNITURE (NIC. FOR REFERENCE ONLY)

D1.0 FIXTURE FLOOR PLAN
D2.10 CHECKOUT
D2.11 CHECKOUT
D2.20 SERVICE DESK
D2.30 WALL CASE
D2.40 DISPLAY BOOKSHELVES

0

REDATE JUL 26 2004
ACS D.Rooney
FLS
SSS

LICENSED ARCHITECT JOHN ASHWORTH No. C26747 REN. 1–31–05 STATE OF CALIFORNIA

BID SET

SHEET TITLE:
TITLE SHEET

IDENTIFICATION STAMP
DIVISION OF THE STATE ARCHITECT
105925
APPL 01
AC Lekman FLS deGasso SS Al
DATE: 5-12-04

BLDG. ID: 098
ID CODE: 312098–109.01–A

DRAWN BY: GL
CHECKED BY: JA
JOB NO: 0307

SHEET T1.0

7/29/03 T01-00.DWG

ARCHITECTURAL DRAWING ABBREVIATIONS

&	And
L	Angle
@	At
℄	Centerline
ø	Diameter or Round
#	Pound or Number
(E)	Existing
ACOUS.	Acoustical
A.D.	Area Drain
ADC	Automatic Door Control
ADO	Automatic Door Operator
ADJ.	Adjustable
A.F.F.	Above Finish Floor
AGGR.	Aggregate
ALUM.	Aluminum
AP.	Acoustical Panel
APPROX.	Approximate
ARCH.	Architectural
AT.	Acoustical Tile
ASPH.	Asphalt
BD.	Board
BITUM.	Bituminous
BLDG.	Building
BLK.	Block
BLKG.	Blocking
BM.	Beam
B.O.H.	Back of House
B.O.	Bottom of
BOT.	Bottom
CAB.	Cabinet
C.B.	Catch Basin
C.B.U.	Cementitious Backer Unit
CEM.	Cement
CER.	Ceramic
C.G.	Corner Guard
C.I.	Cast Iron
C.J.	Control Joint
CLG.	Ceiling
CLKG.	Caulking
CLOS.	Closet
CLR.	Clear
CMU	Concrete Masonry Unit
CNTR.	Counter
C.O.	Cased Opening
COL.	Column
CONC.	Concrete
CONN.	Connection
CONST.	Construction
CONT.	Continuous
CS.	Concrete Sealer
CTR.	Center
CTSK.	Countersunk
DBL.	Double
DEPT.	Department
DET.	Detail
D.A.	Disabled Accessible
D.F.	Drinking Fountain
DIA.	Diameter
DIM.	Dimension
DISP.	Dispenser
DN.	Down
D.O.	Door Opening
DR.	Door
DS.	Downspout
D.S.P.	Dry Standpipe
DWG.	Drawing
DWR.	Drawer
(E)	Existing
E.	Electrical
EA.	Each
EIFS	Exterior Insulation Finish System
E.J.	Expansion Joint
EL.	Elevation
ELEC.	Electrical
EMER.	Emergency
ENCL.	Enclosure
E.P.	Electrical Panelboard
EQ.	Equal
EQPT.	Equipment
E.W.C.	Electric Water Cooler
EXP.	Expansion
EXPO.	Exposed
EXIST.	Existing
EXT.	Exterior
F.A.P.	Fire Alarm Panel
F.A.	Fire Alarm
F.B.	Flat Bar
F.D.	Floor Drain
FDN.	Foundation
F.E.	Fire Extinguisher
F.E.C.	Fire Extinguisher Cabinet
F.G.R.	Fiberglass Reinforced
FIN.	Finish
FL.	Floor
FLASH.	Flashing
FLUOR.	Fluorescent
F.O.C.	Face of Concrete
F.O.F.	Face of Finish
F.O.S.	Face of Studs
FPRF.	Fireproof
F.S.	Floor Sink
F.S.	Full Size
FT.	Foot or Feet
FTG.	Footing
FURR.	Furring
GA.	Gauge
GALV.	Galvanized
G.B.	Grab Bar
GL.	Glass
GND.	Ground
GR.	Grade
GYP.	Gypsum
H.B.	Hose Bibb
H.C.	Hollow Core
HD.	Heat Detector
HDWD.	Hardwood
HDWE.	Hardware
HGT.	Height
H.M.	Hollow Metal
HORIZ.	Horizontal
HR.	Hour
I.D.	Inside Diameter (Dim.)
INSUL.	Insulation
INT.	Interior
IRRIG.	Irrigation
JAN.	Janitor
JT.	Joint
KIT.	Kitchen
LAM.	Laminate
LAV.	Lavatory
LKR.	Locker
LT.	Light
MAX.	Maximum
M.D.F.	Medium Density Fiber Board
MECH.	Mechanical
MEMB.	Membrane
MTL.	Metal
MFR.	Manufacturer
MH.	Manhole
MIN.	Minimum
MIR.	Mirror
MISC.	Miscellaneous
M.O.	Masonry Opening
MTD.	Mounted
MUL.	Mullion
(N)	New
N.	North
N.I.C.	Not in Contract
NO. or #	Number
NOM.	Nominal
N.T.S.	Not to Scale
O.A.	Overall
OBS.	Obscure
OCC.	Occupants
O.C.	On Center
O.D.	Outside Diameter (Dim.)
O.F.D.	Overflow Drain
O.H.	Opposite Hand
OFF.	Office
OPNG.	Opening
OPP.	Opposite
PL.	Plate
P.LAM.	Plastic Laminate
PLAS.	Plaster
PLYWD.	Plywood
PNT.	Point
PR.	Pair
PRCST.	Pre-Cast
PT.	Point
P.T.D.	Paper Towel Dispenser
P.T.D/R	Combination Paper Towel Dispenser & Receptacle
PTN.	Partition
P.TR	Preservative Treated Wood
Q.T.	Quarry Tile
R.	Riser
RAD.	Radius
R.B.	Resilient Base
R.D.	Roof Drain
REF.	Reference
REFR.	Refrigerator
REINF.	Reinforced
REQ.	Required
RESIL.	Resilient
RGTR.	Register
R.J.	Reveal Joint
RM.	Room
R.O.	Rough Opening
RWD.	Redwood
R.W.L.	Rainwater Leader
S.	South
S.C.	Solid Core
—	—
SCHED.	Schedule
SD.	Smoke Detector
SECT.	Section
SH.	Shelf
SHR.	Shower
SHT.	Sheet
SIM.	Similar
SJ.	Seismic Joint
S.N.D.	Sanitary Napkin Dispenser
S.N.R.	Sanitary Napkin Receptacle
SPEC.	Specification
SQ.	Square
S.S.	Sanitary Sewer
S.ST.	Stainless Steel
STA.	Station
STD.	Standard
STL.	Steel
STOR.	Storage
STRL.	Structural
SUSP.	Suspended
SYM.	Symmetrical
T	Telephone
T.B.	Towel Bar
T.C.	Top of Curb
TEL.	Telephone
TER.	Terrazzo
T.&G.	Tongue and Groove
T.G.	Truss Joist
THK.	Thick
T.O.	Top of
T.O.C.	Top of Curb
T.O.P.	Top of Plate
T.O.S.	Top of Slab
T.P.	Top of Pavement
T.P.D.	Toilet Paper Dispenser
TRD.	Tread
T.V.	Television
T.W.	Top of Wall
TYP.	Typical
UNF.	Unfinished
U.O.N.	Unless Otherwise Noted
UR.	Urinal
VCT.	Vinyl Composition Tile
VERT.	Vertical
VEST.	Vestibule
VWC.	Vinyl Wall Covering
W.	Water
W/	With
W.C.	Water Closet
WD.	Wood
WDB.	Wood Base
WH	Water Heater
W/O	Without
W.O.	Where Occurs
WP.	Waterproof
WSCT.	Wainscot
WT.	Weight

DRAWING REFERENCES

S.A.D.	See Architectural Drawings
S.C.D.	See Civil Drawings
S.E.D.	See Electrical Drawings
S.G.D.	See Graphics Drawings
S.L.D.	See Landscape Drawings
S.M.D	See Mechanical Drawings
S.P.D.	See Plumbing Drawings
S.S.D.	See Structural Drawings

ARCHITECTURAL SYMBOLS

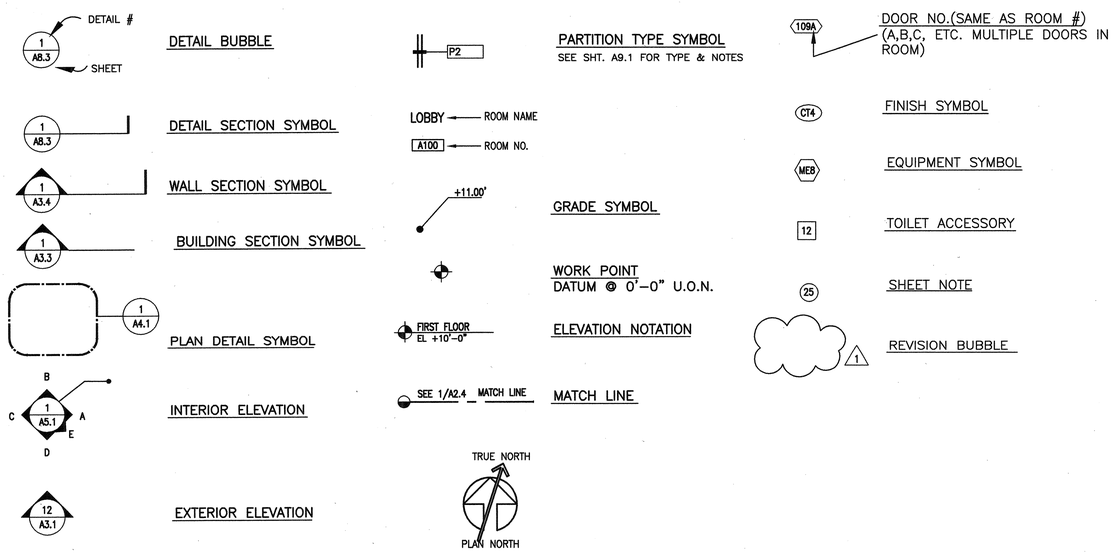

BUILDING CODE ANALYSIS

Project Description
The project is a new Bookstore and related administrative, retail, storage and food services at the Diablo Valley College in Pleasant Hill, Contra Costa County, California. The facility consists of a new ±15,500 sf 2-story facility (plus a basement). It is composed of steel columns, steel floor and roof joists, concrete floor slab-on-grade and cast concrete foundations. There will be 3 elevators, one designed as a service elevator, one passenger elevator and one freight lift.

Classification
Construction of the Building is to be Type II One-hour throughout.

Automatic Sprinkler System
The entire building will be protected by an approved automatic fire sprinkler system, to be installed in accordance with NFPA 13. CBC Section 508 permits the sprinkler system to subsitute for One-hour fire-resistive construction. Design/build system plans and specifications will be submitted to the Division of the State Architect for review, prior to the commencement of construction of the automatic sprinkler system.

Occupancies
CBC Table 3-A
The Bookstore will be a mixed-use facility combining B, M and S occupancies as defined in Table 3-A. A breakdown of the rooms and occupancy group is listed below:

Room Name:	Occupancy
Retail	M
Buy Back/Counting	M
Convenience Store	B
Cafe	B
Offices	B
Service	B
Electrical, Mechanical	B
Receiving	M
Storage	S

Occupancy Separation Requirements
CBC Table 3-B

Type B to Type M – None required
Type B to Type S – None required
Type M to Type S – None required

Allowable Floor Areas
Section 504.2 allows an increase for a multistory building by a factor of 2 for the area permitted by UBC Table 5-B. Doubling the permitted area of 18,000sf permits an area of 36,000 sf. Therefore the total combined building area of ±15,500 sf is less than the allowable maximum permitted.

Allowable Height
CBC Table 5-B
For Type II One-hour construction, the maximum allowable height is 4 stories. The maximium height of the bookstore building is 45'-9" at the entry.

Distance to Property Line & Protection of Exterior Walls and Openings
UBC Table 5-A
For Type II-1 hour, occupancy groups B, M and S, the exterior walls must be One-hour noncombustible construction. The fire sprinkler system provides a substitution for the 1 hour construction requirments and the materials are non combustable. The canopy projections are of non combustable construction and meet the requirements of section 503.2.1.

Openings are not permitted if less than 5 feet from a property line and are required to be protected if less than 10 feet from property line.

Location on Property
Since there are existing buildings adjacent to the new Bookstore on the property, for the purpose of this analysis it is assumed that the property line lies in the center between the buildings. Distance shall be measured at right angles from the property line.

The closest existing building to the Bookstore is the Math building to the south. It is Type VN construction, B occupancy. Refer to Site Plan, sheet A1.0. The locations and application numbers for all campus buildings are shown on sheet A1.1.

Occupant Load Calculations for Exiting Purposes
CBC Table 10-A

Room Name	Use	Area	Occupant Load Factor	# of Occ.	Min. # of Exits
Basement:					
Receiving, Storage	26	859	300	3	1
Secure Storage	26	123	300	1	1
Service Elevator	–	70	–	–	–
Elevator Mechanical	26	61	300	1	1
Stair #2	–	186	–	–	–
Electrical	26	113	300	1	1
Miscellaneous	26	328	300	1	1
Total Basement		1,740		7	
First floor:					
Entry, Checkout	27	816	30	28	1
Convenience Store	27	770	30	26	1
Walk in Coolers	26	105	–	–	–
Cafe	4	131	15	9	1
Cafe Storage	26	46	30	2	1
Retail	27	5422	30	181	2*
Restrooms	–	63	–	–	–
Buyback	23	241	100	3	1
Counting	23	211	100	3	1
Service	27	486	30	17	1
Supervisor	23	100	100	1	1
Customer Care	23	87	100	1	1
Security	23	96	100	1	1
Elevator	–	82	–	–	–
Elevator Mechanical	–	51	–	–	–
Electrical	26	47	30	2	1
Janitor	26	57	30	2	1
Stair #1	–	301	–	–	–
Misc.	–	618	–	–	–
Total First Floor		9,730		276	
Second floor:					
Waiting, Seating	23	116	100	2	1
Break, Meeting	4	466	15	31	1
Manager	23	132	100	2	1
Office Assistant	23	151	100	2	1
Open Office	23	805	100	9	1
Server	26	86	300	1	1
Restrooms	–	333	–	–	–
Janitor	26	26	300	1	1
Storage	26	68	300	1	1
Misc.	–	1707	300	–	–
Total Second Floor		3,890		49	

*All required exit doors from rooms with 50 or more occupants will be equipped with panic hardware (1007.2.5) and will swing in the direction of the exit travel (1003.3.1.5).

The width of the means of egress for the basement will be 36" minimum since the occupant load is less than 50 as per CBC Section 1004.3.4.2. The total width of stairs required for exiting per CBC Table 10-B from the basement is 44" (14 x .3 = 5).

The total width of exits required for exiting the First Floor is 73" (363 x .2) as per CBC Table 10-B.

The width of the means of egress for the second floor will be 36" minimum since the occupant load is less than 50 as per CBC Section 1004.3.4.2. The total width of stairs required for exiting per CBC Table 10-B from the second floor is 44" (23 x .3 = 7).

Sanitary Fixture Requirements
Chapter 29 and Appendix Table A-29-A

Area	Male	Fixtures Req'd	Female	Fixtures Req'd	
Group M					
6576 sf/200 sf per occ.	15	1 WC,	16	2 WC,	2 Lav
Group B					
6609 sf/200 sf per occ.	16	1 WC,	16	1 WC,	1 Lav

Total fixture required:
Female: 3 WC, 2 Lav
Male: 2 WC-Ur, 1 Lav

The footnotes to Table A-29-A call for one drinking fountain per 150 occupants when the occupant load exceeds 30. The total occupant load is 400; therefore 3 drinking fountains are required and provided. One fixture will meet the accessible requirements.

Other Fire Safety Requirements
Portable fire extinguishers will be located no more than 75' from any point within the building per NFPA-10. A specially labeled fire extinguisher will be provided in the Cafe??.

Smoke detectors will be provided where indicated on the electrical drawings, and where required by the reviewing Fire Marshal. Mechanical rooms will also have heat detectors.

Maximum occupant load signs are required in all rooms with over 50 occupants per UBC section 1002.3. These signs will be provided at the Retail Space. These signs will located near the primary exit.

Accessibility Requirements
This project will be designed to comply with the stricter of the requirements of the ADA and California Title 24.

Each toilet room will have at least one accessible toilet and one accessible lavatory. In addition, each men's room with urinals will have at least one accessible urinal. The drinking fountains will be a combination "hi-lo" unit.

All door hardware will be accessible lever, push/pull or panic hardware type. All doors will be of the required widths, with the prescribed clearances and maximum operating pressures.

All signage will include raised letters and CA braille. In addition, there will be symbols of accessibility at all designated parking stalls and building entries.

Heights of electrical outlets and switches, as well as the operable portions of all toilet accessories will be as prescribed.

All stairs, ramps and elevators will be in compliance with the regulations.

Energy Requirements
The building envelope, lighting system and mechanical system will comply with the requirements of California Title 24. Calculations are provided in the Architectural, Mechanical and Electrical drawing sections.

BSA
Architects
A California Corporation
350 PACIFIC AVENUE
SAN FRANCISCO, CA 94111
415-781-1526

DIABLO VALLEY COLLEGE

DIABLO VALLEY COLLEGE NEW BOOKSTORE

321 GOLF CLUB RD.
PLEASANT HILL, CALIFORNIA

© 2003 BSA Architects
"All drawings and written material appearing herein constitute the original and unpublished work of the architect and the same may not be duplicated, used, or disclosed without the written consent of the architect."

DATE: 23 JULY, 2004

REVISIONS:

LICENSED ARCHITECT
LORI A. ASHWORTH
No. C26747
REN. 1-31-05
STATE OF CALIFORNIA

BID SET

SHEET TITLE:
SYMBOLS, CODE ANALYSIS, ABBREVIATIONS,

IDENTIFICATION STAMP
DIVISION OF THE STATE ARCHITECT
105925
APPL 01
AC LF FLS ED SS A1
DATE: 5-12-04 JUL 2 0 2004

BLDG. ID: 098
ID CODE: 312098-109.01-A
DRAWN BY: GL
CHECKED BY: JA
JOB NO: 0307
SHEET T1.1

7/29/03 T01-01.DWG

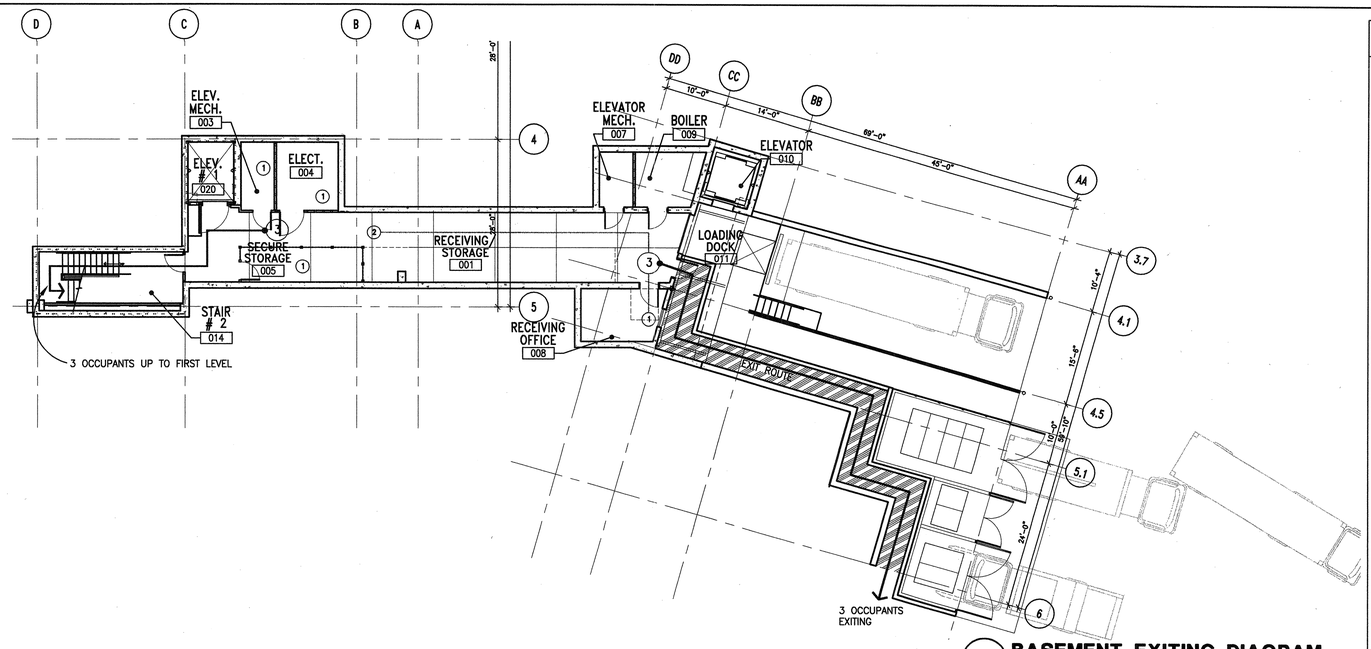

1 BASEMENT EXITING DIAGRAM

N.T.S. PLAN–1

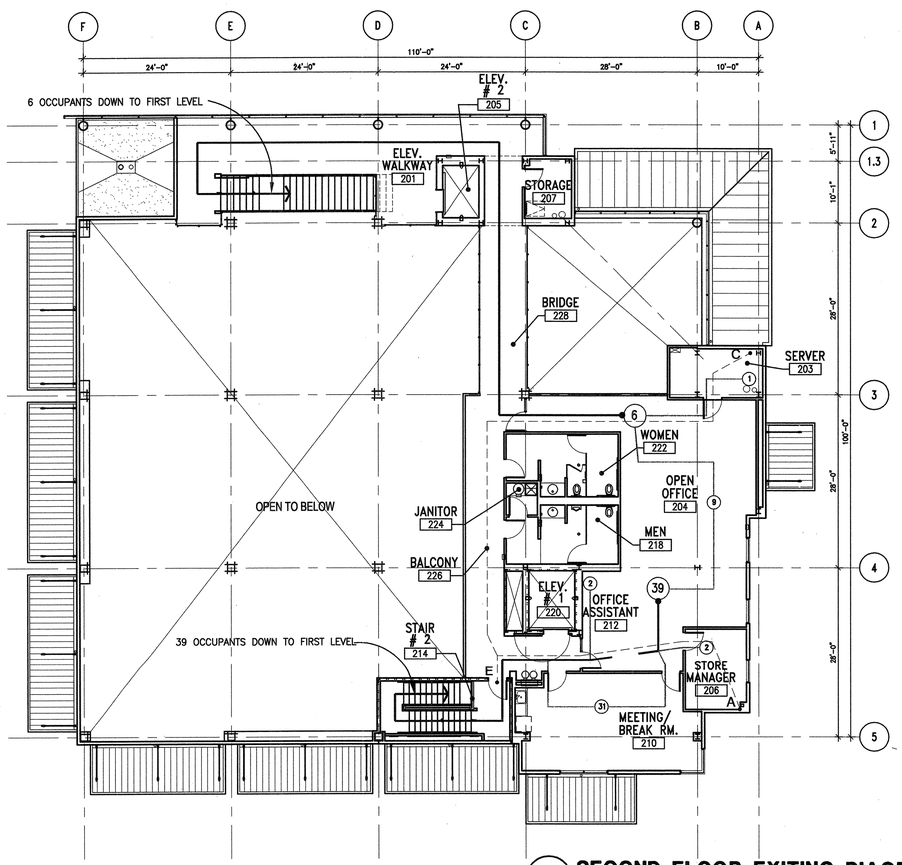

3 SECOND FLOOR EXITING DIAGRAM

N.T.S. PLAN–1

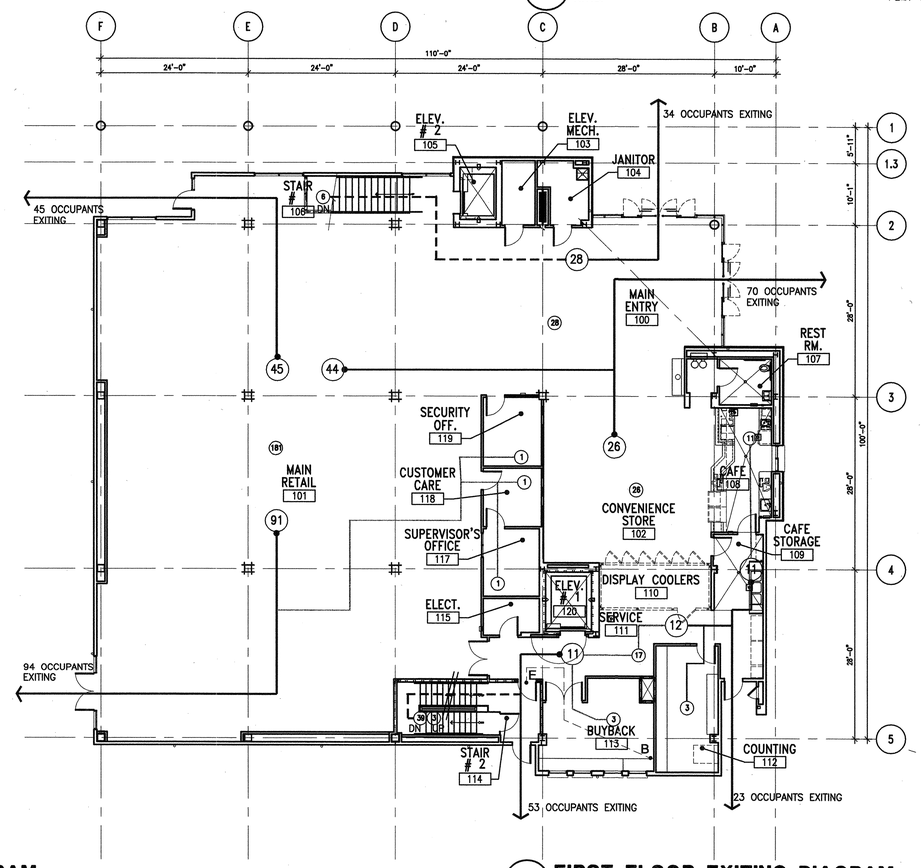

2 FIRST FLOOR EXITING DIAGRAM

N.T.S. PLAN–1

PROGRAM AREA

PROGRAM SPACES	SQ. FT.
LOADING DOCK	
RECEIVING OFFICE	77 SQ. FT.
BOILER ROOM	125 SQ. FT.
ELEV.	65 SQ.FT.
MISC.	91 SQ. FT.
SUBTOTAL	358 SQ. FT.
BASEMENT	
RECEIVING/ STORAGE	859 SQ.FT.
SECURE STORAGE	123 SQ.FT.
SERVICE ELEV.	70 SQ.FT.
ELEV. MECH	61 SQ.FT.
STAIR # 2	186 SQ.FT.
ELEC./TEL.	113 SQ. FT.
MISC.	328 SQ. FT.
SUBTOTAL	1,740 SQ. FT.
FIRST FLOOR	
ENTRY	816 SQ.FT.
CONVENIENCE STORE	770 SQ. FT.
WALK IN COOLERS	105 SQ.FT.
CAFE	131 SQ.FT.
CAFE STORAGE	46 SQ.FT.
TEXTBOOKS/GENERAL	5422 SQ.FT.
REST.	63 SQ. FT.
BUYBACK	241 SQ.FT.
COUNTING	211 SQ.FT.
SERVICE	486 SQ. FT.
SUPERVISOR	100 SQ.FT.
CUSTOMER CARE	87 SQ.FT.
SECURITY	96 SQ.FT.
ELEV.	82 SQ.FT.
ELEV. MECH.	51 SQ.FT.
ELEC.	47 SQ.FT.
JANITOR	57 SQ.FT.
STAIR # 1	301 SQ.FT.
MISC.	618 SQ.FT.
SUBTOTAL	9,730 SQ.FT.
SECOND FLOOR	
WAITTING/ SEATING	116 SQ.FT.
BREAK/ MEETING	466 SQ.FT.
MANAGER	132 SQ.FT.
OFFICE ASST.	151 SQ.FT.
OPEN OFFICE	805 SQ.FT.
SERVER	86 SQ.FT.
MENS	163 SQ.FT.
WOMEN'S	170 SQ.FT.
JAN.	26 SQ.FT.
STORAGE	68 SQ.FT.
MISC.	1707 SQ.FT.
SUBTOTAL	3,890 SQ.FT.
BOOKSTORE TOTAL	15,360 SQ.FT.
BOOKSTR. & LOAD. DOCK TOTAL	15,718 SQ.FT.

EXITING LEGEND

①	# OF OCCUPANTS IN ROOM
①→	# OF OCCUPANTS USING SPECIFIED EXIT PATH
——	EXIT PATH FROM SPECIFIED ROOM
①- - -→	EXITING PATH FROM LEVEL ABOVE
A• - - -•A	LINE OF TRAVEL DISTANCE

TRAVEL DISTANCES

PATH	ROOM #	DISTANCE
A–E	206	52'–3"
B–E	113	32'–8"
C–E	203	95'–0"

BSA Architects
A California Corporation
350 PACIFIC AVENUE
SAN FRANCISCO, CA 94111
415–781–1526

DIABLO VALLEY COLLEGE

DIABLO VALLEY COLLEGE NEW BOOKSTORE

321 GOLF CLUB RD.
PLEASANT HILL, CALIFORNIA

© 2003 BSA Architects
"All drawings and written material appearing herein constitute the original and unpublished work of the architect and the same may not be duplicated, used, or disclosed without the written consent of the architect."

DATE: 23 JULY, 2004

REVISIONS:

LICENSED ARCHITECT JOHN ASHWORTH No. C26747 REN. 1-31-05 STATE OF CALIFORNIA

BID SET

SHEET TITLE:

EXITING DIAGRAM

IDENTIFICATION STAMP
DIVISION OF THE STATE ARCHITECT
105925
APPL 01
AC LE FLS EO SS M
DATE: 5-12-04 JUL 2 6 2004

BLDG. ID: 098
ID CODE: 312098–109.01–A

DRAWN BY: JH
CHECKED BY: JA
JOB NO: 0307

SHEET T1.2

7/29/03 T01-02.DWG

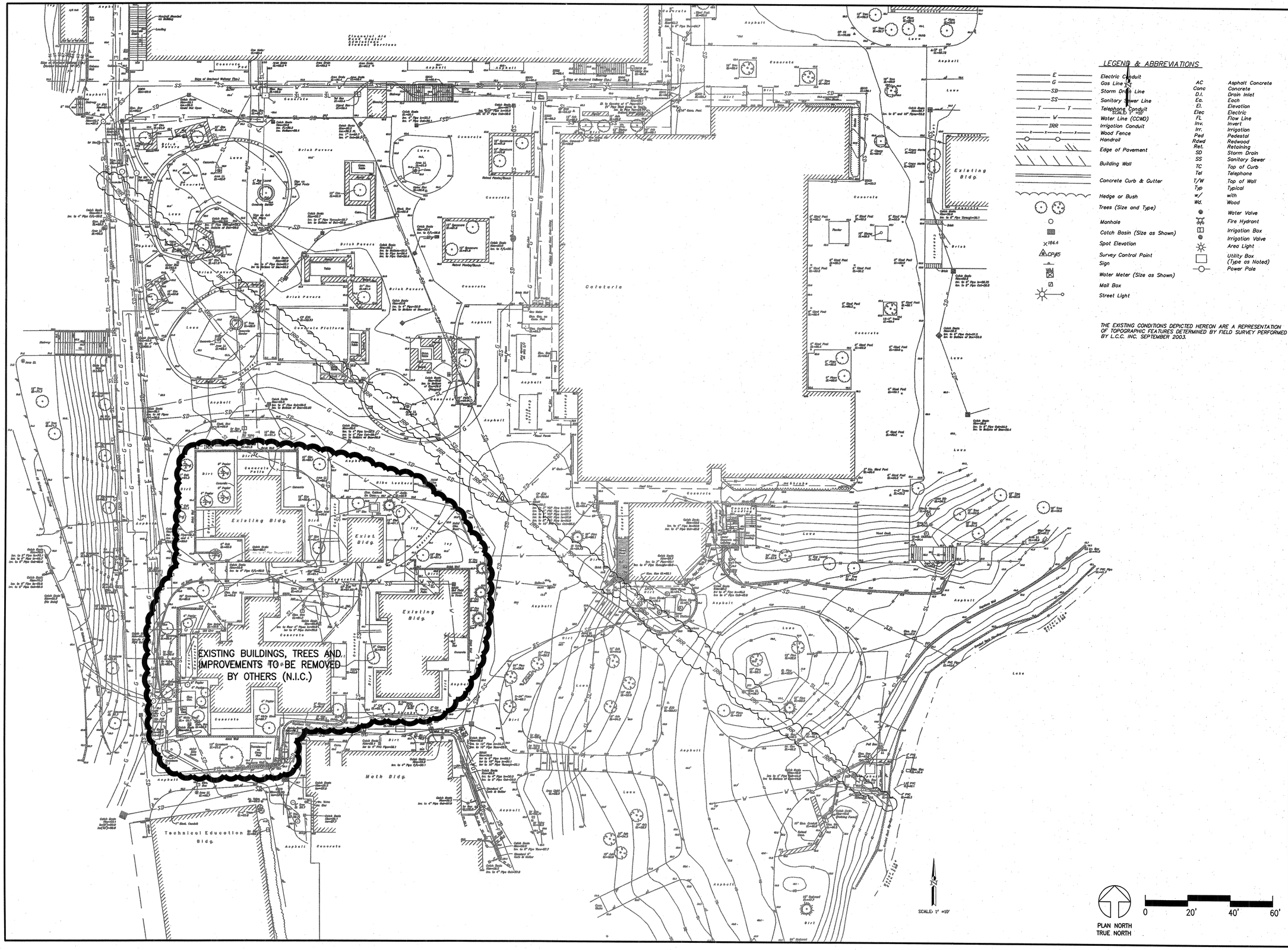

LEGEND & ABBREVIATIONS

E	Electric Conduit	AC	Asphalt Concrete
G	Gas Line	Conc	Concrete
SD	Storm Drain Line	D.I.	Drain Inlet
SS	Sanitary Sewer Line	Ea.	Each
T	Telephone Conduit	El.	Elevation
W	Water Line (CCWD)	Elec	Electric
IRR	Irrigation Conduit	FL	Flow Line
X	Wood Fence	Inv.	Invert
	Handrail	Irr.	Irrigation
	Edge of Pavement	Ped	Pedestal
	Building Wall	Rdwd	Redwood
	Concrete Curb & Gutter	Ret.	Retaining
	Hedge or Bush	SD	Storm Drain
	Trees (Size and Type)	SS	Sanitary Sewer
	Manhole	TC	Top of Curb
	Catch Basin (Size as Shown)	Tel	Telephone
×164.4	Spot Elevation	T/W	Top of Wall
CP#5	Survey Control Point	Typ	Typical
	Sign	w/	with
WM	Water Meter (Size as Shown)	Wd.	Wood
	Mail Box		Water Valve
	Street Light		Fire Hydrant
			Irrigation Box
			Irrigation Valve
			Area Light
			Utility Box (Type as Noted)
			Power Pole

THE EXISTING CONDITIONS DEPICTED HEREON ARE A REPRESENTATION OF TOPOGRAPHIC FEATURES DETERMINED BY FIELD SURVEY PERFORMED BY L.C.C. INC. SEPTEMBER 2003.

LEPTIEN, CRONIN, COOPER, MORRIS & POORE, INC.
dba LCC, Inc.
Civil Engineering - Land Surveying
930 Estudillo Street
Martinez, California 94553-1620
(925) 228-4218 Fax (925) 228-4638
LCC Job No. 2003.039

REGISTERED PROFESSIONAL ENGINEER
ALBERT A. ADAMS
No. 19623
Exp. 06/30/05
CIVIL
STATE OF CALIFORNIA

JUL 2 2 2004

DIABLO VALLEY COLLEGE

DIABLO VALLEY COLLEGE NEW BOOKSTORE

321 GOLF CLUB RD.
PLEASANT HILL, CALIFORNIA

DATE: 23 JULY, 2004

REVISIONS:
0 REVISIONS- 23 JULY, 2004

BID SET

SHEET TITLE:

EXISTING CONDITIONS

IDENTIFICATION STAMP
DIVISION OF THE STATE ARCHITECT
105925
APPL 01
AC LE FLS EO SS AI
DATE: 5-12-04 JUL 26 2004

BLDG. ID: 098
ID CODE: 312098-109.01-A

DRAWN BY:
CHECKED BY:
JOB NO:

SHEET
C1.0

AutoCAD 07/21/2004 07:18:59 DVC Bookstore Design.dwg

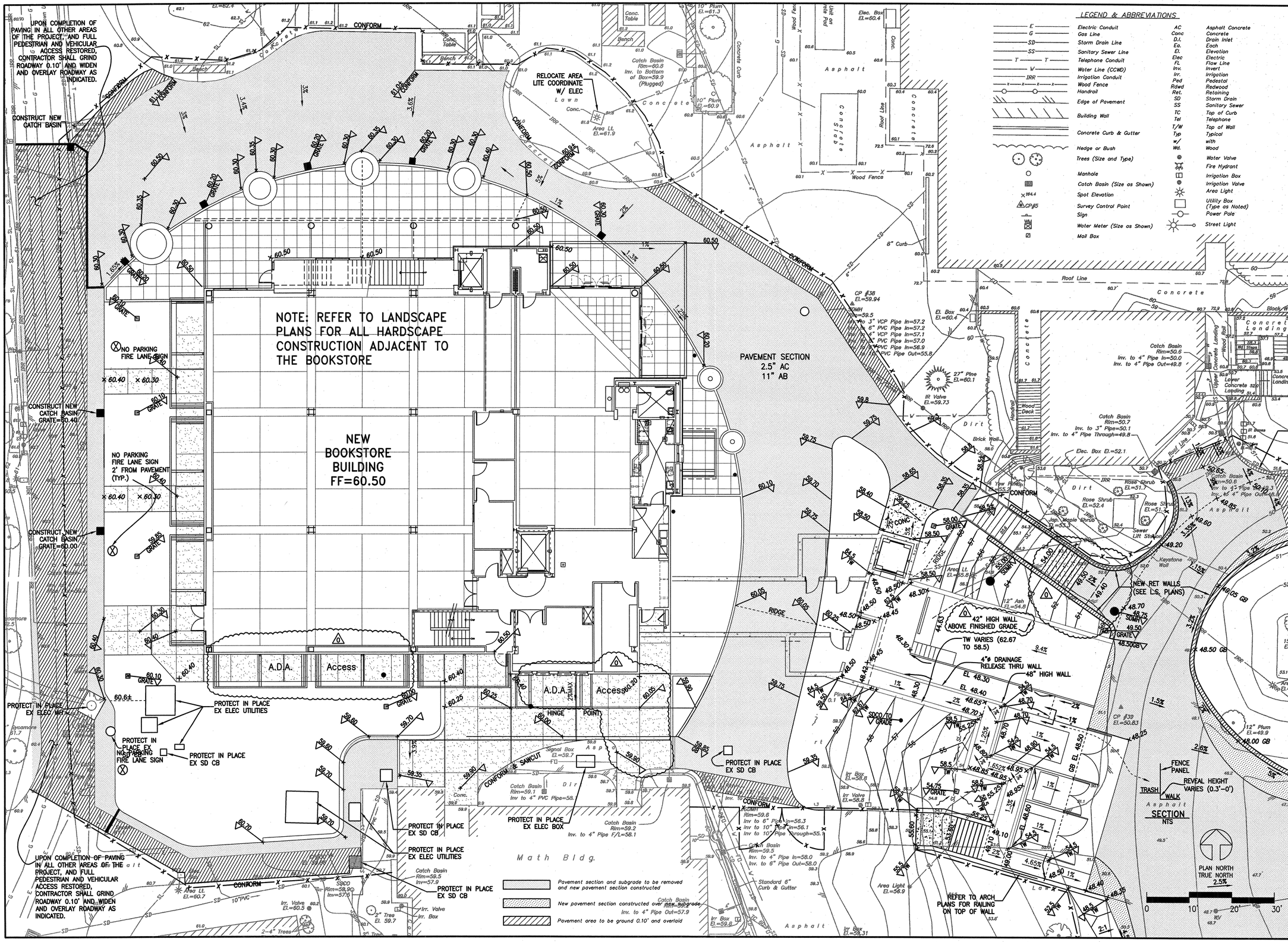

LEGEND & ABBREVIATIONS

E	Electric Conduit	AC	Asphalt Concrete
G	Gas Line	Conc	Concrete
SD	Storm Drain Line	D.I.	Drain Inlet
SS	Sanitary Sewer Line	Ea.	Each
T	Telephone Conduit	El.	Elevation
W	Water Line (CCWD)	Elec	Electric
IRR	Irrigation Conduit	FL	Flow Line
x x x x	Wood Fence	Inv.	Invert
	Handrail	Irr.	Irrigation
	Edge of Pavement	Ped	Pedestal
	Building Wall	Rdwd	Redwood
	Concrete Curb & Gutter	Ret.	Retaining
	Hedge or Bush	SD	Storm Drain
	Trees (Size and Type)	SS	Sanitary Sewer
	Manhole	TC	Top of Curb
	Catch Basin (Size as Shown)	Tel	Telephone
×184.4	Spot Elevation	T/W	Top of Wall
CP#5	Survey Control Point	Typ	Typical
	Sign	w/	with
WM	Water Meter (Size as Shown)	Wd.	Wood
	Mail Box		Water Valve
			Fire Hydrant
			Irrigation Box
			Irrigation Valve
			Area Light
			Utility Box (Type as Noted)
			Power Pole
			Street Light

LEPTIEN, CRONIN, COOPER, MORRIS & POORE, INC.
dba LCC, Inc.
Civil Engineering - Land Surveying
930 Estudillo Street
Martinez, California 94553-1620
(925) 228-4218 Fax (925) 228-4638
LCC Job No. 2003.039

REGISTERED PROFESSIONAL ENGINEER
LARRY E. EDWARDS
No. 46923
Exp. 06/30/06
CIVIL
STATE OF CALIFORNIA

JUL 2 2 2004

DIABLO VALLEY COLLEGE

DIABLO VALLEY COLLEGE NEW BOOKSTORE

321 GOLF CLUB RD.
PLEASANT HILL, CALIFORNIA

DATE: 23 JULY, 2004

REVISIONS:
0 REVISIONS- 23 JULY, 2004

BID SET

SHEET TITLE:

GRADING PAVING AND DRAINAGE (1 OF 2)

IDENTIFICATION STAMP
DIVISION OF THE STATE ARCHITECT
APPL 01 105925
AC LE FLS EO SS A1
DATE: 5-12-04 JUL 2 6 2004

BLDG. ID: 098
ID CODE: 312098-109.01-A

DRAWN BY:
CHECKED BY:
JOB NO:

SHEET C1.1

AutoCAD 07/21/2004 07:14:08 SVC Bookstore Design.dwg

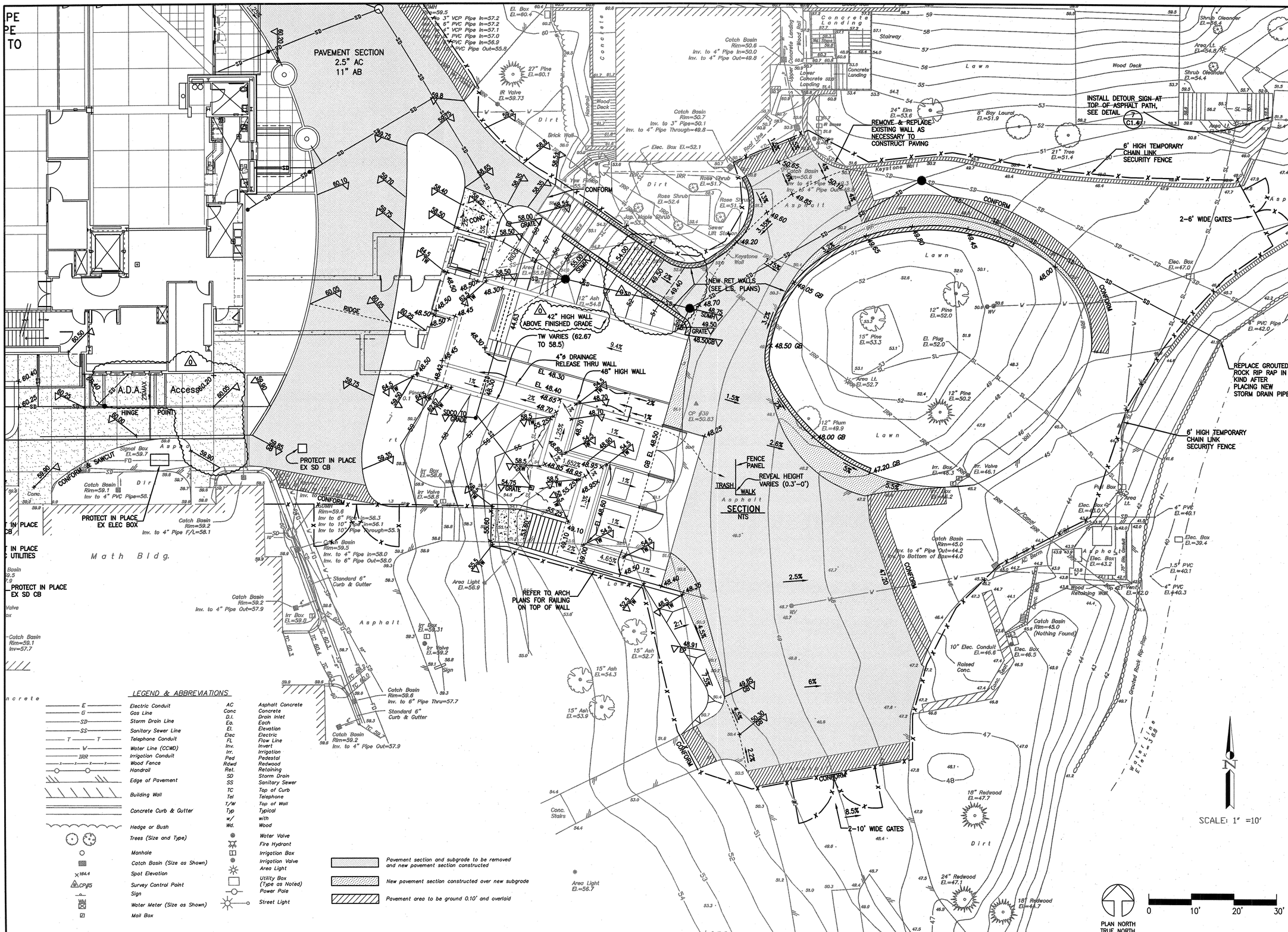

LEGEND & ABBREVIATIONS

E	Electric Conduit	AC	Asphalt Concrete
G	Gas Line	Conc	Concrete
SD	Storm Drain Line	D.I.	Drain Inlet
SS	Sanitary Sewer Line	Ea.	Each
T	Telephone Conduit	El.	Elevation
W	Water Line (CCWD)	Elec	Electric
IRR	Irrigation Conduit	FL	Flow Line
x	Wood Fence	Inv.	Invert
	Handrail	Irr.	Irrigation
	Edge of Pavement	Ped	Pedestal
	Building Wall	Rdwd	Redwood
	Concrete Curb & Gutter	Ret.	Retaining
	Hedge or Bush	SD	Storm Drain
	Trees (Size and Type)	SS	Sanitary Sewer
	Manhole	TC	Top of Curb
	Catch Basin (Size as Shown)	Tel	Telephone
164.4	Spot Elevation	T/W	Top of Wall
CP#5	Survey Control Point	Typ	Typical
	Sign	w/	with
	Water Meter (Size as Shown)	Wd.	Wood
	Mail Box		Water Valve
			Fire Hydrant
			Irrigation Box
			Irrigation Valve
			Area Light
			Utility Box (Type as Noted)
			Power Pole
			Street Light

Pavement section and subgrade to be removed and new pavement section constructed

New pavement section constructed over new subgrade

Pavement area to be ground 0.10' and overlaid

LEPTIEN, CRONIN, COOPER, MORRIS & POORE, INC.
dba LCC, Inc.
Civil Engineering - Land Surveying
930 Estudillo Street
Martinez, California 94553-1620
(925) 228-4218 Fax (925) 228-4638
LCC Job No. 2003.039

REGISTERED PROFESSIONAL ENGINEER ALBERT A. MORRIS No. 19822 Exp. 09/30/05 CIVIL STATE OF CALIFORNIA

JUL 2 2 2004

DIABLO VALLEY COLLEGE

DIABLO VALLEY COLLEGE NEW BOOKSTORE

321 GOLF CLUB RD.
PLEASANT HILL, CALIFORNIA

DATE: 23 JULY, 2004

REVISIONS:

0 REVISIONS- 23 JULY, 2004

BID SET

SHEET TITLE:

GRADING PAVING AND DRAINAGE (2 OF 2)

IDENTIFICATION STAMP
DIVISION OF THE STATE ARCHITECT
105925
APPL 01
AC LE FLS EO SS A1
DATE: 5-12-04 JUL 2 6 2004

BLDG. ID: 098
ID CODE: 312098-109.01-A

DRAWN BY:
CHECKED BY:
JOB NO:

SHEET C1.2

AutoCAD 07/21/2004 07:11:03 DVC Bookstore Design.dwg

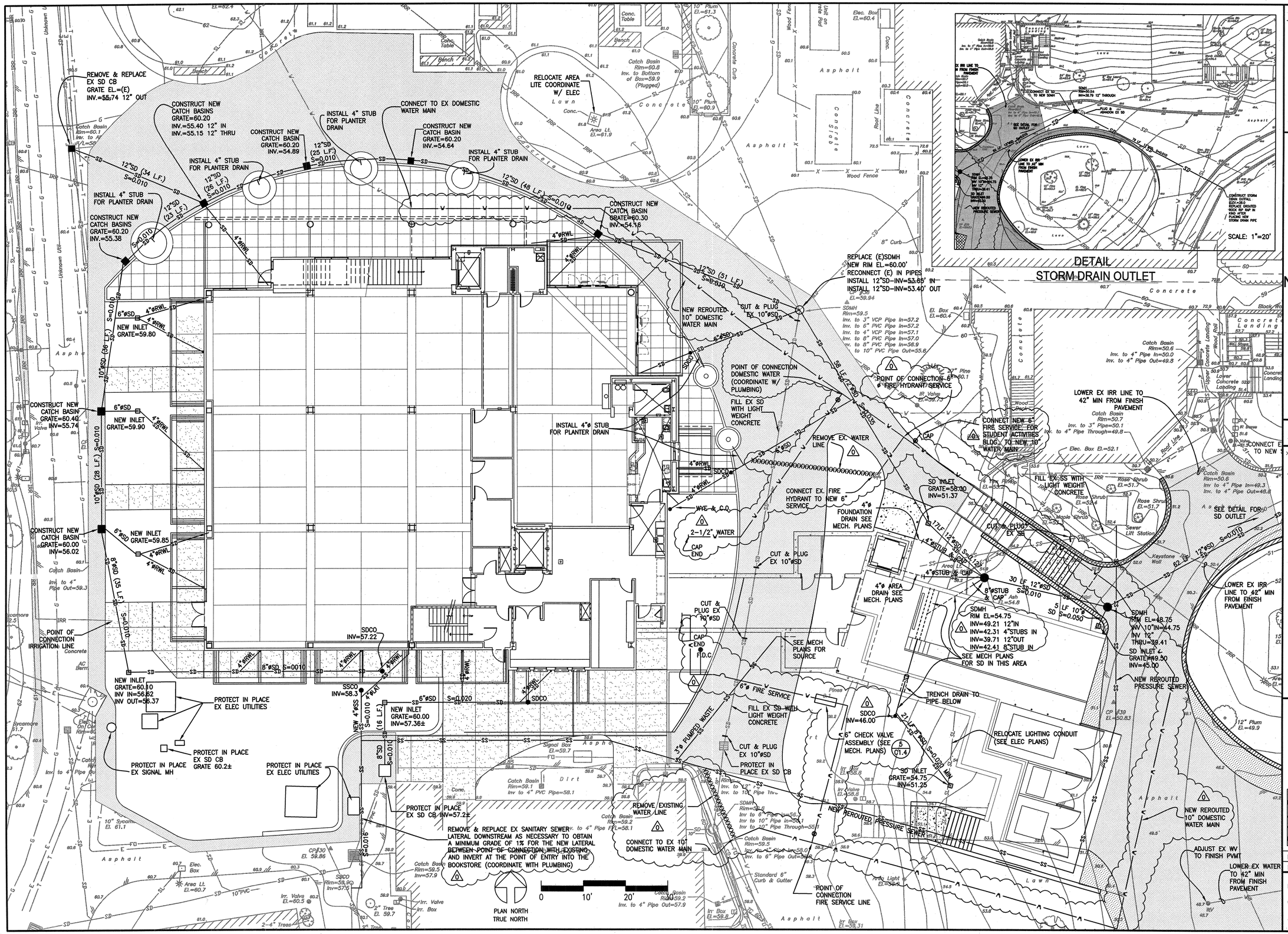

DETAIL
STORM DRAIN OUTLET

LEPTIEN, CRONIN, COOPER, MORRIS & POORE, INC.
dba LCC, Inc.
Civil Engineering - Land Surveying
930 Estudillo Street
Martinez, California 94553-1620
(925) 228-4218 Fax (925) 228-4638
LCC Job No. 2003.039
REGISTERED PROFESSIONAL ENGINEER
Exp. 09/30/05
CIVIL
STATE OF CALIFORNIA
26 JULY 04

DIABLO VALLEY COLLEGE

DIABLO VALLEY COLLEGE NEW BOOKSTORE

321 GOLF CLUB RD.
PLEASANT HILL, CALIFORNIA

DATE: 23 JULY, 2004

REVISIONS:

0 REVISIONS- 23 JULY, 2004

BID SET

SHEET TITLE:

UTILITY PLAN

IDENTIFICATION STAMP
DIVISION OF THE STATE ARCHITECT
105925
APPL 01
AC LE FLS EP SS M
DATE: 5-12-04 JUL 26 2004

BLDG. ID: 098
ID CODE: 312098-109.01-A

DRAWN BY:
CHECKED BY:
JOB NO:

SHEET C1.3

07/25/2004 08:22:34 DVC Bookstore Design.dwg CAG

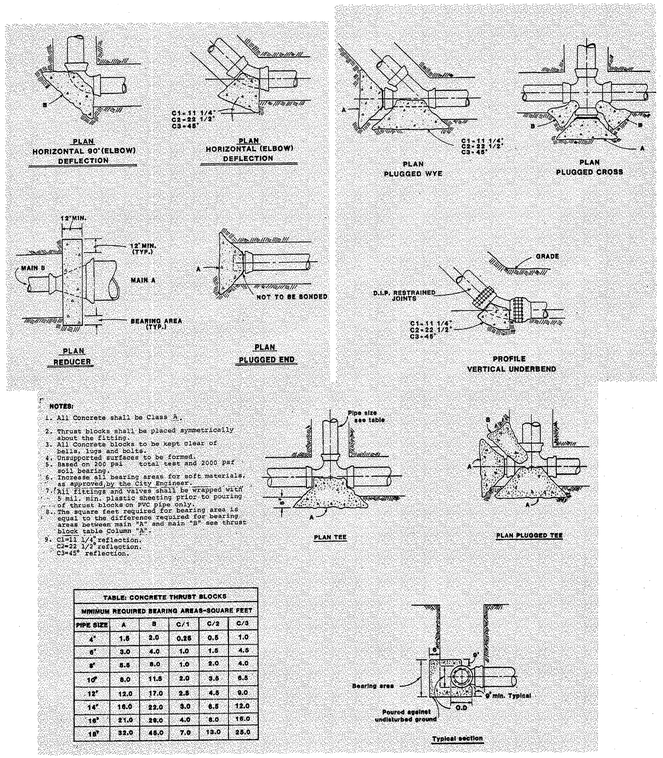

TABLE: CONCRETE THRUST BLOCKS					
MINIMUM REQUIRED BEARING AREAS-SQUARE FEET					
PIPE SIZE	A	B	C/1	C/2	C/3
4"	1.5	2.0	0.25	0.5	1.0
6"	3.0	4.0	1.0	1.5	4.5
8"	5.5	8.0	1.0	2.0	4.0
10"	8.0	11.5	2.0	3.5	6.5
12"	12.0	17.0	2.5	4.5	9.0
14"	16.0	22.0	3.0	6.5	12.0
16"	21.0	28.0	4.0	8.0	16.0
18"	32.0	46.0	7.0	13.0	23.0

1 CONC THRUST BLOCKING

N.T.S.

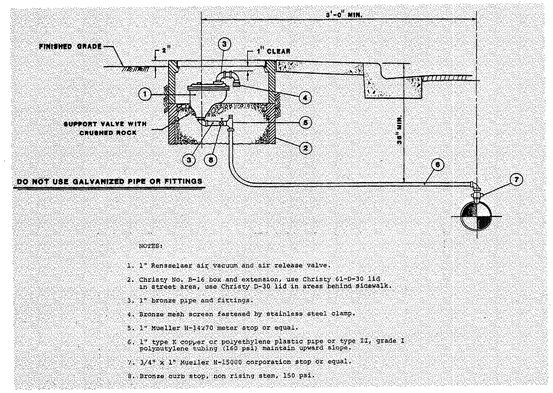

2 VACUUM RELEASE VALVE

N.T.S.

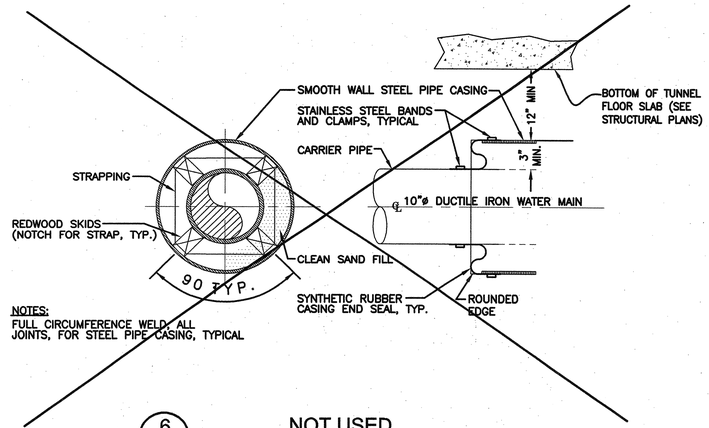

6 NOT USED

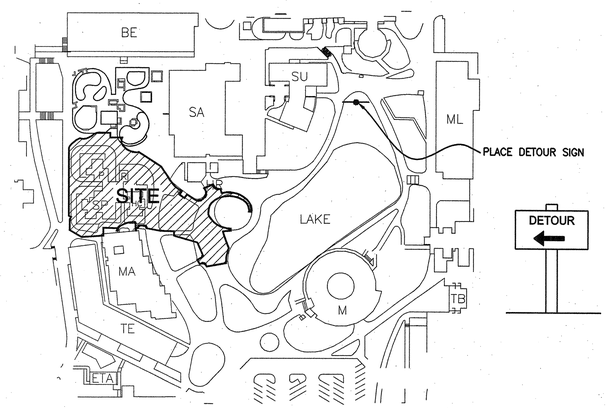

7 DETOUR SIGN LOCATION

N.T.S.

3 NOT USED

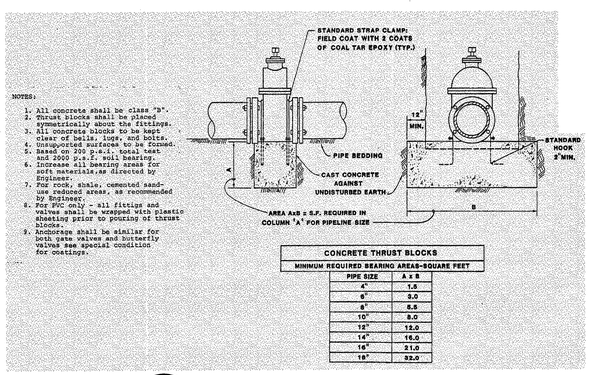

CONCRETE THRUST BLOCKS	
MINIMUM REQUIRED BEARING AREAS-SQUARE FEET	
PIPE SIZE	A x B
4"	1.5
6"	3.0
8"	5.5
10"	8.0
12"	12.0
14"	16.0
16"	21.0
18"	32.0

4 VALVE THRUST ANCHOR

N.T.S.

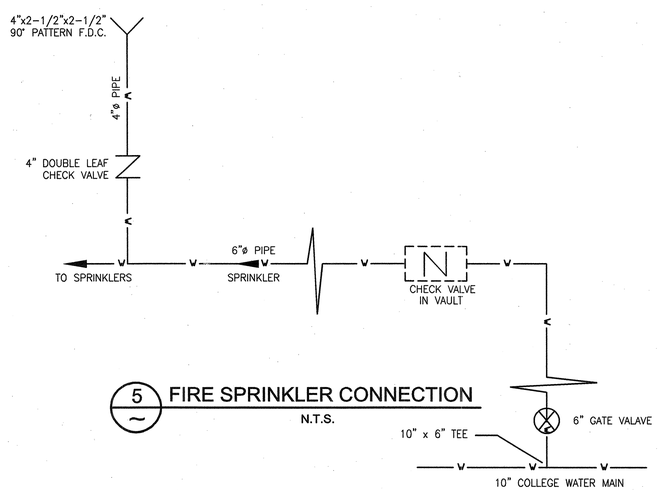

5 FIRE SPRINKLER CONNECTION

N.T.S.

LOCAL FIRE AUTHORITY REVIEW:

ACCESS ROADS & GATE ENTRANCES ARE IN ACCORDANCE WITH TITLE 19, CALIFORNIA CODE OF REGULATIONS SUBCHAPTER 1, ARTICLE 3.05 (ACCESS ROADS) AND ARTICLE 3.16 (GATE ENTRANCES) TO SCHOOL SITES.

FIRE FLOW, FIRE HYDRANT LOCATIONS AND DISTRIBUTION ARE IN ACCORDANCE WITH CALIFORNIA FIRE CODE, APPENDIX III-A (FIRE FLOW) AND APPENDIX III-B (HYDRANT LOCATIONS).

LOCAL FIRE AUTHORITY: _____

ADDRESS: _____ CITY/STATE/ZIP: _____

PHONE NUMBER: _____ DATE: _____

APPROVAL ISSUED BY: _____ RANK/TITLE: _____

COMMENTS: _____

(A SIGNATURE ABOVE SIGNIFIES THAT THE LOCAL FIRE AUTHORITY WAS CONSULTED REGARDING ACCESS ROADS, GATES IN PERIMETER FENCES, LOCATION OF FIRE HYDRANTS, FIRE FLOW, FIRE DEPARTMENT CONNECTIONS, PORTABLE FIRE EXTINGUISHERS, AND FIRE PROTECTION DURING CONSTRUCTION. METHODS INDICATED ON PLANS AND IN SPECIFICATIONS ARE CONSIDERED ADEQUATE.)

LEPTIEN, CRONIN, COOPER, MORRIS & POORE, INC.
dba LCC, Inc.
Civil Engineering - Land Surveying
930 Estudillo Street
Martinez, California 94553-1620
(925) 228-4218 Fax (925) 228-4638
LCC Job No. 2003.039
REGISTERED PROFESSIONAL ENGINEER LARRY A. MORRIS Exp. 09/30/05 CIVIL STATE OF CALIFORNIA
26 JUL 04

DIABLO VALLEY COLLEGE

DIABLO VALLEY COLLEGE NEW BOOKSTORE

321 GOLF CLUB RD.
PLEASANT HILL, CALIFORNIA

DATE: 23 JULY, 2004

REVISIONS:

0 REVISIONS- 23 JULY, 2004

BID SET

SHEET TITLE:

DETAILS

IDENTIFICATION STAMP
DIVISION OF THE STATE ARCHITECT
105925
APPL 01
AC LE FLS ED SS AT
DATE: 5-12-04 JUL 26 2004

BLDG. ID: 098
ID CODE: 312098-109.01-A

DRAWN BY:
CHECKED BY:
JOB NO:

SHEET C1.4

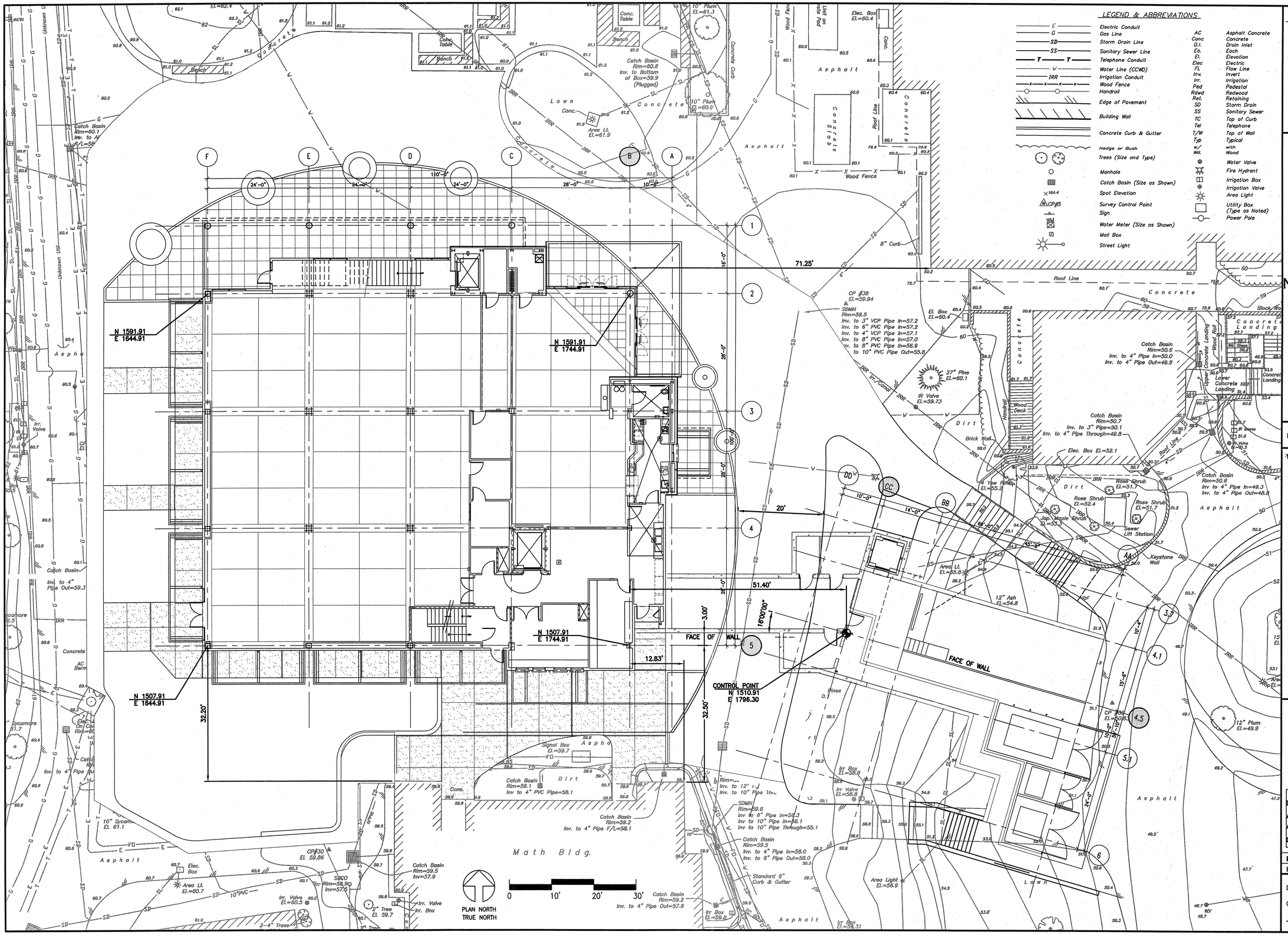

LEPTIEN, CRONIN, COOPER, MORRIS & POORE, INC.
dba LCC, Inc.
Civil Engineering - Land Surveying
930 Estudillo Street
Martinez, California 94553-1620
(925) 228-4218 Fax (925) 228-4638
LCC Job No. 2003.039

REGISTERED PROFESSIONAL ENGINEER
ALBERT A. MORRIS
No. 16823
Exp. 09/30/05
CIVIL
STATE OF CALIFORNIA

JUL 2 2 2004

DIABLO VALLEY COLLEGE

DIABLO VALLEY COLLEGE NEW BOOKSTORE

321 GOLF CLUB RD.
PLEASANT HILL, CALIFORNIA

DATE: 23 JULY, 2004

REVISIONS:

BID SET

SHEET TITLE:

BUILDING LOCATION PLAN

IDENTIFICATION STAMP
DIVISION OF THE STATE ARCHITECT
105925
APPL 01
AC LE FLS ED SS A1
DATE: 5-12-04 JUL 2 6 2004

BLDG. ID: 098
ID CODE: 312098-109.01-A

DRAWN BY:
CHECKED BY:
JOB NO:

SHEET C1.5

AutoCAD 07/21/2004 07:15:27 DVC Bookstore Design.dwg

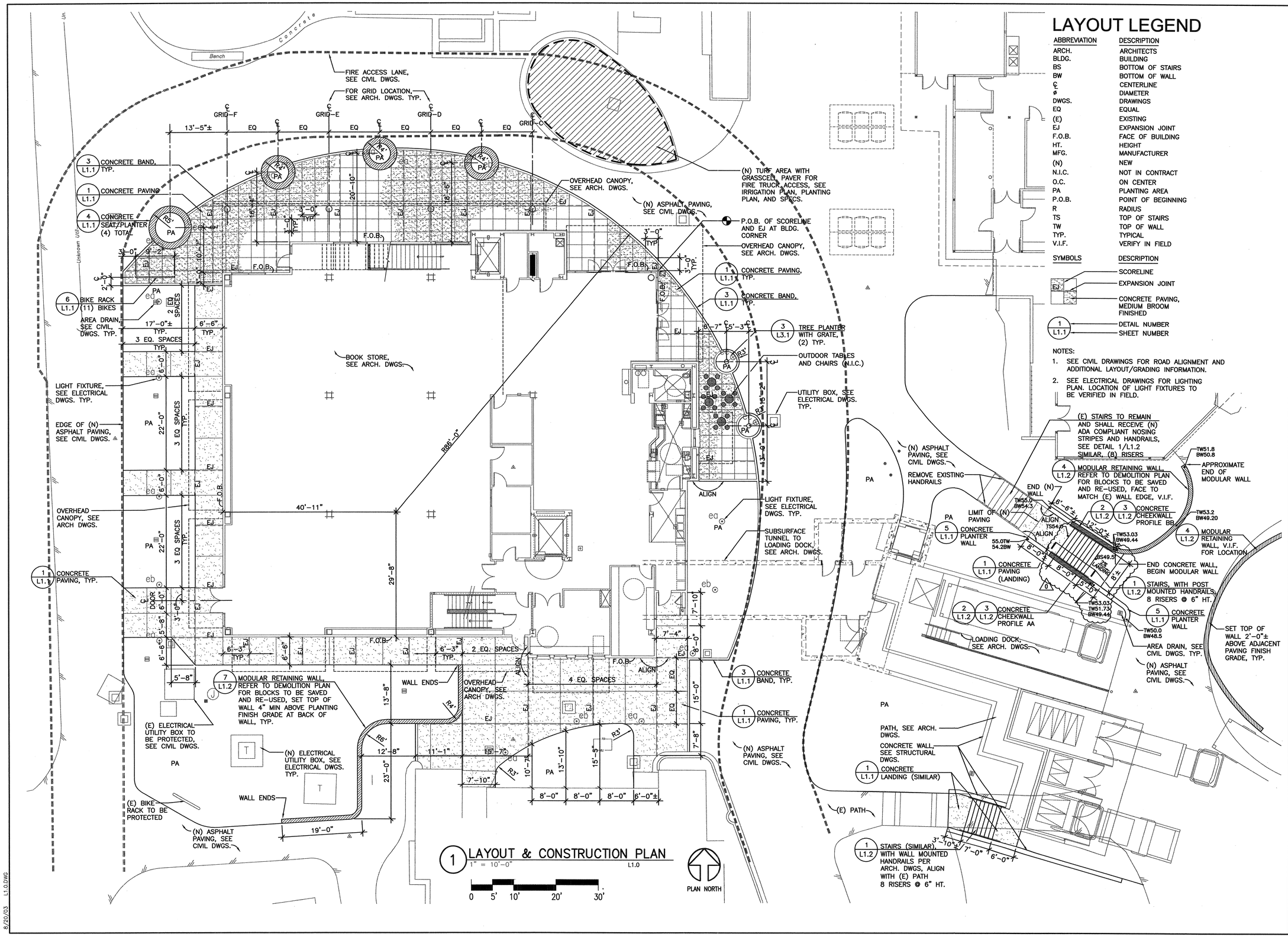

1 LAYOUT & CONSTRUCTION PLAN L1.0
1" = 10'–0"

LAYOUT LEGEND

ABBREVIATION	DESCRIPTION
ARCH.	ARCHITECTS
BLDG.	BUILDING
BS	BOTTOM OF STAIRS
BW	BOTTOM OF WALL
℄	CENTERLINE
ø	DIAMETER
DWGS.	DRAWINGS
EQ	EQUAL
(E)	EXISTING
EJ	EXPANSION JOINT
F.O.B.	FACE OF BUILDING
HT.	HEIGHT
MFG.	MANUFACTURER
(N)	NEW
N.I.C.	NOT IN CONTRACT
O.C.	ON CENTER
PA	PLANTING AREA
P.O.B.	POINT OF BEGINNING
R	RADIUS
TS	TOP OF STAIRS
TW	TOP OF WALL
TYP.	TYPICAL
V.I.F.	VERIFY IN FIELD

SYMBOLS	DESCRIPTION
	SCORELINE
EJ	EXPANSION JOINT
	CONCRETE PAVING, MEDIUM BROOM FINISHED
1 / L1.1	DETAIL NUMBER / SHEET NUMBER

NOTES:

1. SEE CIVIL DRAWINGS FOR ROAD ALIGNMENT AND ADDITIONAL LAYOUT/GRADING INFORMATION.
2. SEE ELECTRICAL DRAWINGS FOR LIGHTING PLAN. LOCATION OF LIGHT FIXTURES TO BE VERIFIED IN FIELD.

ROYSTON HANAMOTO ALLEY & ABEY
R | H | A
LANDSCAPE ARCHITECTS & PLANNERS
225 Miller Avenue
Mill Valley, CA 94941
415.383.7900
415.383.1433 Fax
mvstudio@rhaa.com
323 Geary Street, #602
San Francisco, CA 94102
415.861.7900
415.861.7908 Fax
sfstudio@rhaa.com

DIABLO VALLEY COLLEGE

DIABLO VALLEY COLLEGE NEW BOOKSTORE

321 GOLF CLUB RD.
PLEASANT HILL, CALIFORNIA

DATE: 23 JULY, 2004

REVISIONS:
0 REVISIONS– 23 JULY, 2004

LICENSED LANDSCAPE ARCHITECT
ADITYA ADVANI NO. 4544
6/30/06
STATE OF CALIFORNIA

BID SET

SHEET TITLE:

LAYOUT & CONSTRUCTION PLAN

IDENTIFICATION STAMP
DIVISION OF THE STATE ARCHITECT
105925
APPL 01
AC LE FLS ED SS A1
DATE: 5-12-04 JUL 26 2004

BLDG. ID: 098
ID CODE: 312098–109.01–A

DRAWN BY: RG
CHECKED BY: AA
JOB NO: 0307

SHEET L1.0

8/20/03 L1.0.DWG

KEYSTONE RETAINING WALL SYSTEMS
A CONTECH COMPANY

Standardized Engineering

for 3 to 6 foot Keystone retaining walls

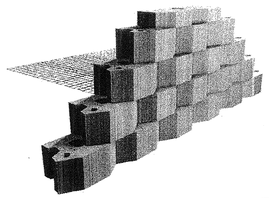

BASALITE® CONCRETE PRODUCTS
a subsidiary of PACIFIC COAST

(800) 747-8971 (National)
(800) 350-5866 (California)
www.keystonewalls.com

REGISTERED PROFESSIONAL ENGINEER
MICHAEL J. MERRILL
No. 27944
STATE OF CALIFORNIA
9/1/05

Michael J. Merrill
2133 Research Dr. Suite 18
Livermore, CA 94550
Ph. 925-606-0985
Fax 925-606-0988

1 of 13

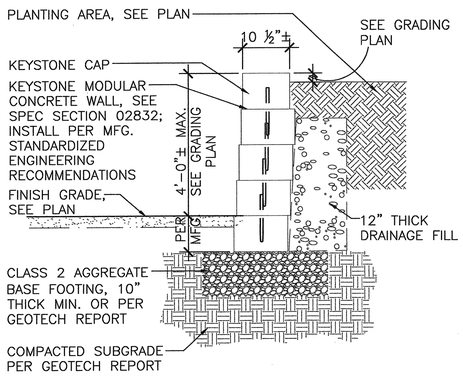

SECTION

7 MODULAR RETAINING WALL (TYPICAL)

NOT TO SCALE — RETWALL

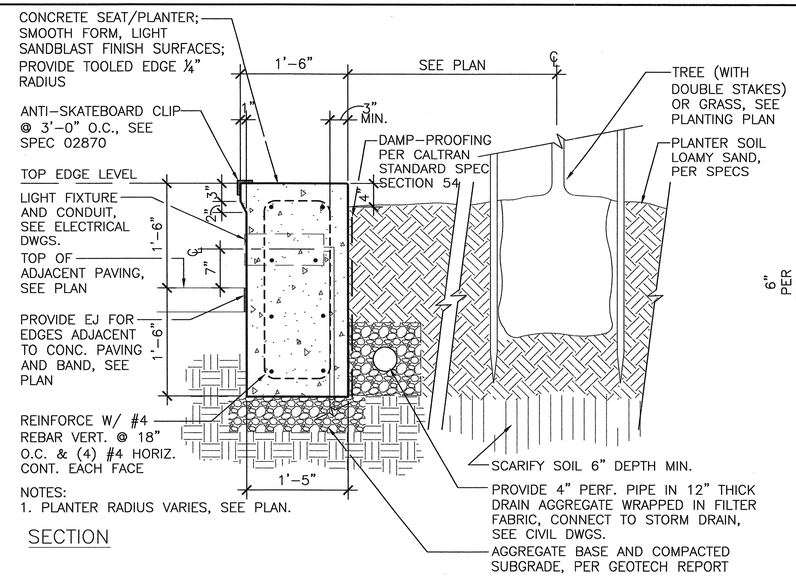

NOTES:
1. PLANTER RADIUS VARIES, SEE PLAN.

SECTION

4 CONCRETE SEAT/PLANTER

NOT TO SCALE — PLANTWALL

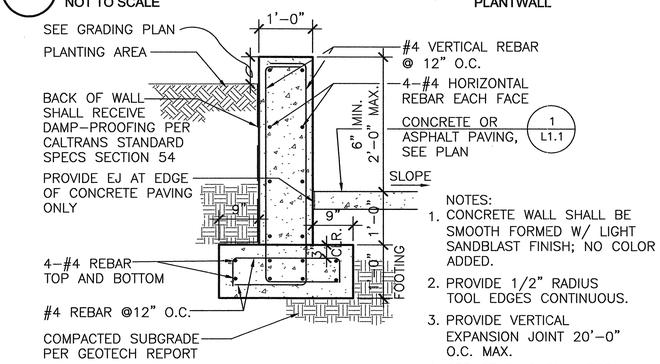

NOTES:
1. CONCRETE WALL SHALL BE SMOOTH FORMED W/ LIGHT SANDBLAST FINISH; NO COLOR ADDED.
2. PROVIDE 1/2" RADIUS TOOL EDGES CONTINUOUS.
3. PROVIDE VERTICAL EXPANSION JOINT 20'-0" O.C. MAX.
4. SEE GRADING PLAN FOR TOP OF WALL.

SECTION

5 CONCRETE PLANTER WALL

NOT TO SCALE — CONCPLANTER

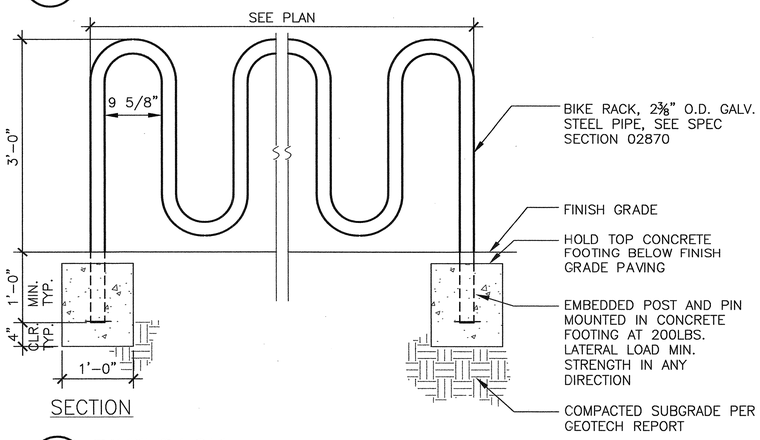

SECTION

6 BIKE RACK

NOT TO SCALE — BIKERACK

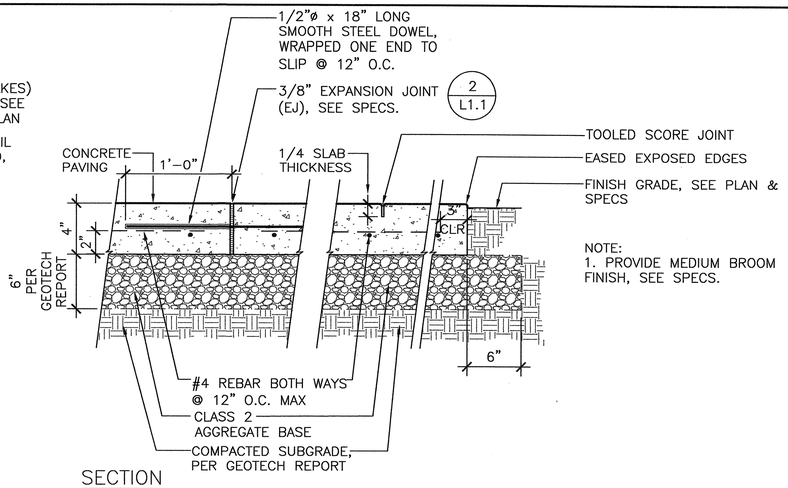

NOTE:
1. PROVIDE MEDIUM BROOM FINISH, SEE SPECS.

SECTION

1 CONCRETE PAVING

NOT TO SCALE — CONCPAV

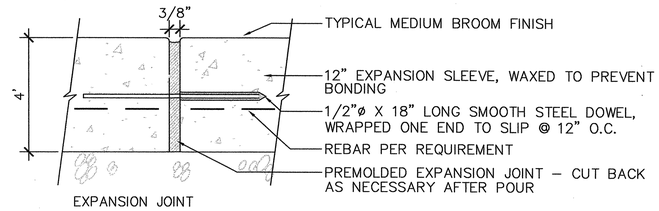

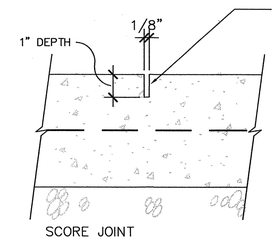

NOTES:
1. INSTALL EXPANSION JOINTS AT 18'-0" O.C. MAX. SEE PLAN.
2. SCORE JOINTS AS SHOWN ON PLAN AND AT 8'-0" MAX PER GEOTECH
3. DOWEL IS TYPICAL AT ALL E-J'S EXCEPT AGAINST WITH CURBS, WALLS, COLUMNS OR SIMILAR VERTICAL STRUCTURES.
4. PROVIDE EJ AT EDGE OF BUILDING AND WALLS.

SECTION

2 EXPANSION / SCORE JOINT

NOT TO SCALE — EJ-SJ1

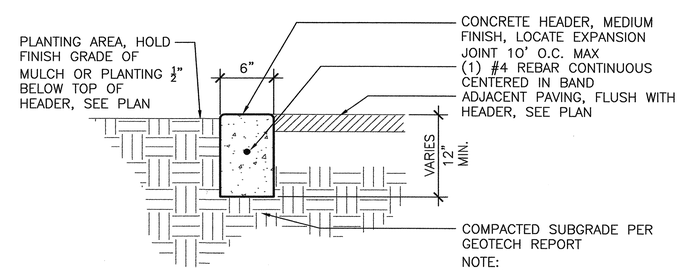

NOTE:
1. PROVIDE EXPANSION JOINT FOR EDGES ADJACENT TO CONC. PAVING

SECTION

3 CONCRETE BAND

NOT TO SCALE — CONCHEADER

ROYSTON HANAMOTO ALLEY & ABEY
RHA
LANDSCAPE ARCHITECTS & PLANNERS
225 Miller Avenue, Mill Valley, CA 94941, 415.383.7900, 415.383.1433 Fax, mvstudio@rhaa.com
323 Geary Street, #602, San Francisco, CA 94102, 415.861.7900, 415.861.7908 Fax, sfstudio@rhaa.com

DIABLO VALLEY COLLEGE

DIABLO VALLEY COLLEGE NEW BOOKSTORE

321 GOLF CLUB RD.
PLEASANT HILL, CALIFORNIA

DATE: 23 JULY, 2004

REVISIONS:

LICENSED LANDSCAPE ARCHITECT
ADITYA ADVANI No. 4624
Aditya Advani 6/30/05
Signature Date
STATE OF CALIFORNIA

BID SET

SHEET TITLE:
CONSTRUCTION DETAILS

IDENTIFICATION STAMP
DIVISION OF THE STATE ARCHITECT
105925
APPL 01
AC LE FLS EO SS A1
DATE: 5-12-04 JUL 26 2004

BLDG. ID: 098
ID CODE: 312098-109.01-A

DRAWN BY: RG
CHECKED BY: AA
JOB NO: 0307

SHEET L1.1

12/3/03 L1.1CONSTDET.DWG

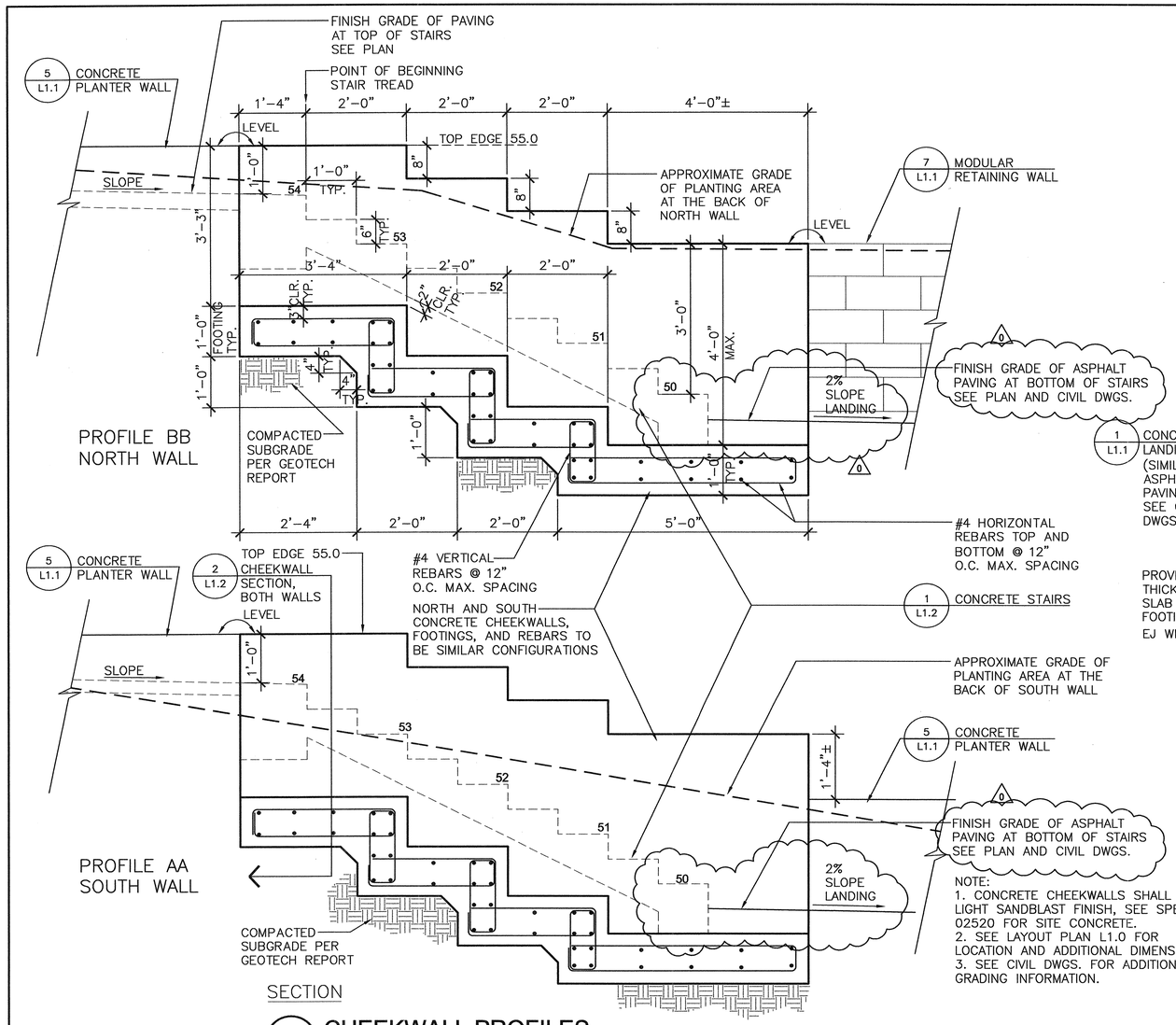

NOTE:
1. CONCRETE CHEEKWALLS SHALL BE LIGHT SANDBLAST FINISH, SEE SPECS 02520 FOR SITE CONCRETE.
2. SEE LAYOUT PLAN L1.0 FOR LOCATION AND ADDITIONAL DIMENSIONS.
3. SEE CIVIL DWGS. FOR ADDITIONAL GRADING INFORMATION.

3 CHEEKWALL PROFILES

NOT TO SCALE — CHKWALPROFILE

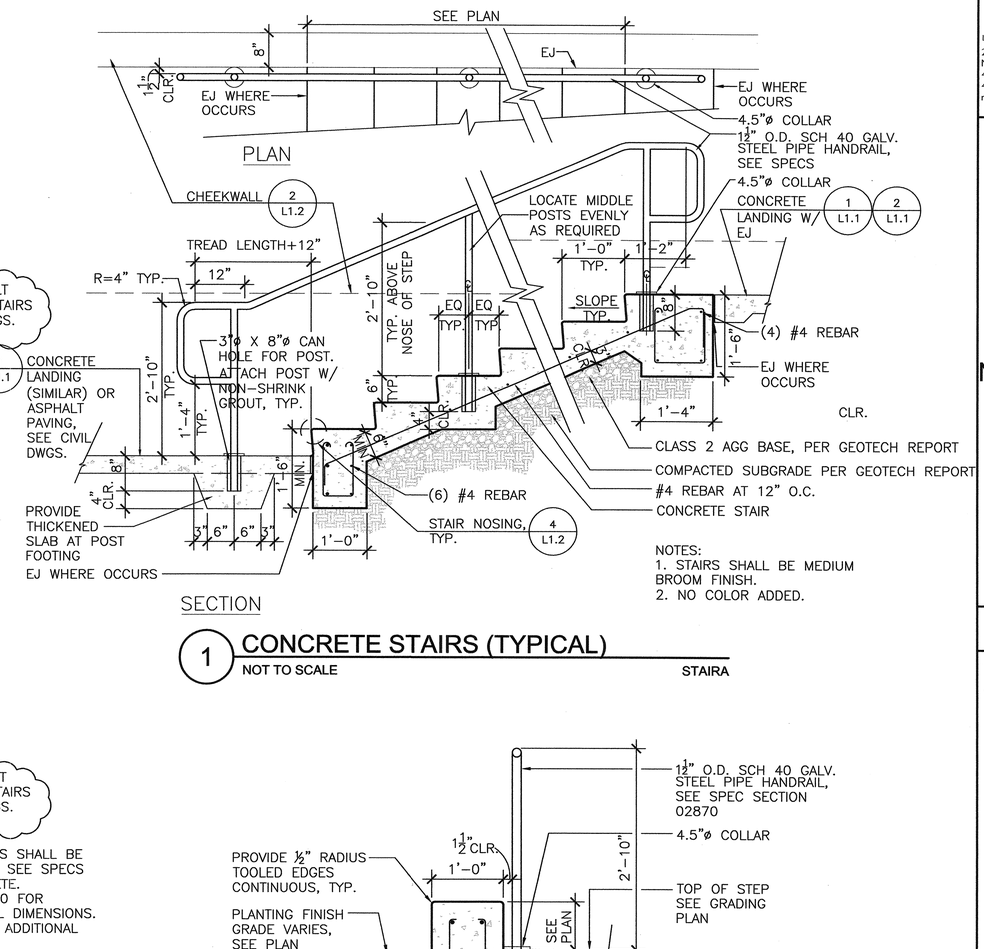

NOTES:
1. STAIRS SHALL BE MEDIUM BROOM FINISH.
2. NO COLOR ADDED.

1 CONCRETE STAIRS (TYPICAL)

NOT TO SCALE — STAIRA

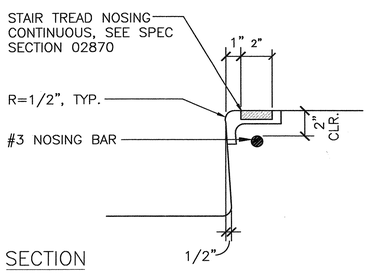

4 STAIR NOSING, TYP.

NOT TO SCALE — STAIRNOSE

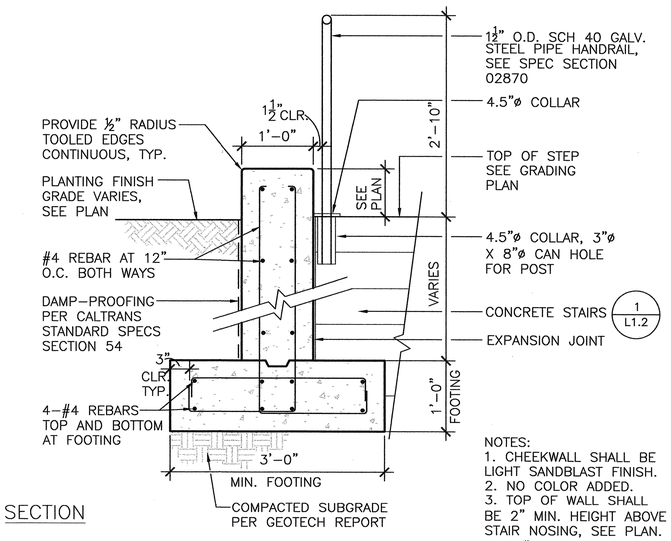

NOTES:
1. CHEEKWALL SHALL BE LIGHT SANDBLAST FINISH.
2. NO COLOR ADDED.
3. TOP OF WALL SHALL BE 2" MIN. HEIGHT ABOVE STAIR NOSING, SEE PLAN.
4. 12" THICK FOOTING TO BE STEPPED.

2 CHEEKWALL WALL (TYPICAL)

NOT TO SCALE — CHKWLPIC

ROYSTON HANAMOTO ALLEY & ABEY
RHAA
LANDSCAPE ARCHITECTS & PLANNERS
225 Miller Avenue, Mill Valley, CA 94941, 415.383.7900, 415.383.1433 Fax, mvstudio@rhaa.com
323 Geary Street, #602, San Francisco, CA 94102, 415.861.7900, 415.861.7908 Fax, sfstudio@rhaa.com

DIABLO VALLEY COLLEGE NEW BOOKSTORE

321 GOLF CLUB RD.
PLEASANT HILL, CALIFORNIA

DATE: 23 JULY, 2004

REVISIONS:
0 REVISIONS- 23 JULY, 2004

LICENSED LANDSCAPE ARCHITECT — ADITYA ADVANI NO. 4524 — STATE OF CALIFORNIA

BID SET

SHEET TITLE:
CONSTRUCTION DETAILS

IDENTIFICATION STAMP
DIVISION OF THE STATE ARCHITECT
105925
APPL 01
AC LE FLS EO SS AI
DATE: 5-12-04 JUL 26 2004

BLDG. ID: 098
ID CODE: 312098-109.01-A

DRAWN BY: RG
CHECKED BY: AA
JOB NO: 0307

SHEET L1.2

12/9/03 L1.2CONSTDET.DWG

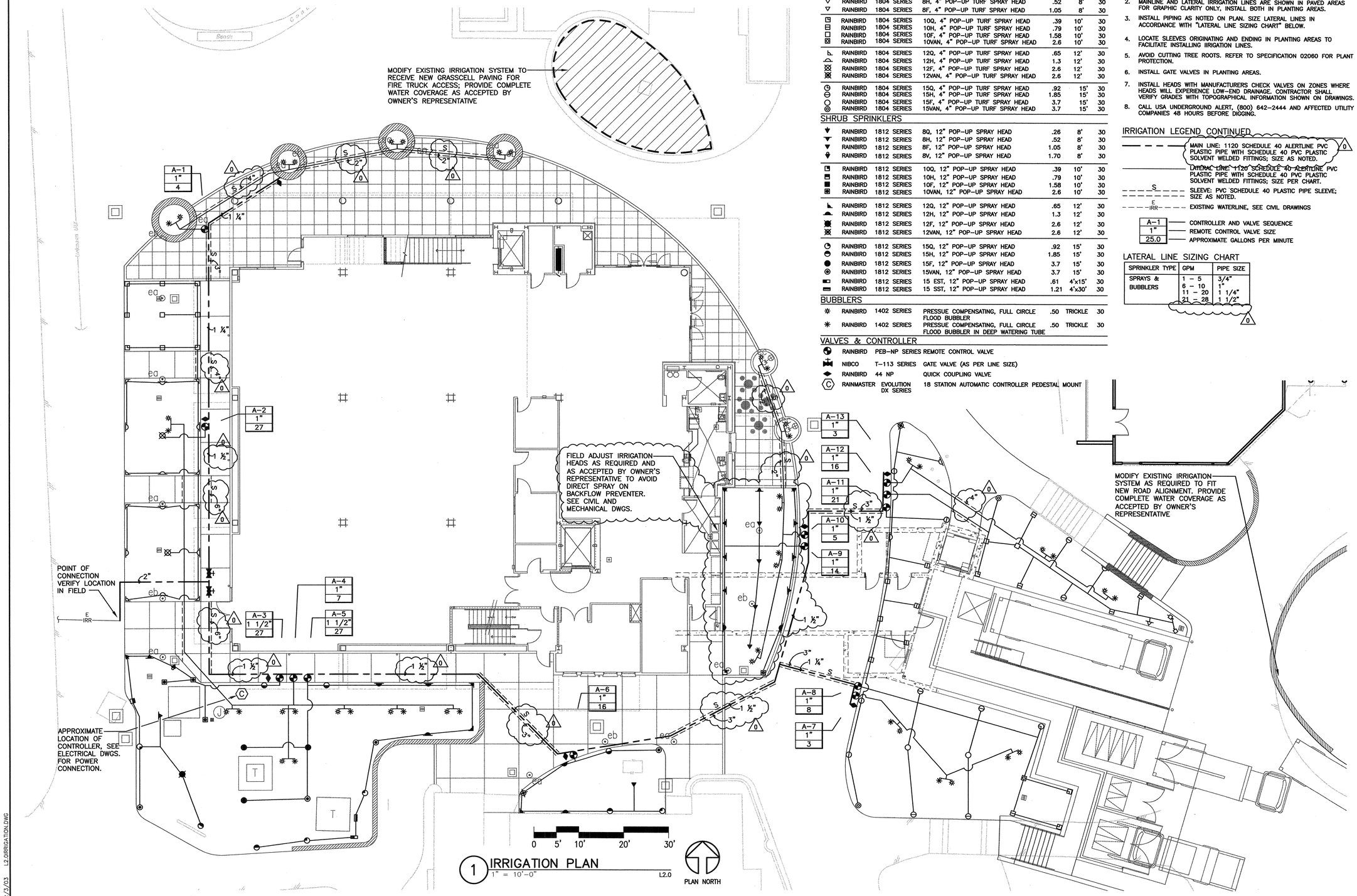

1 IRRIGATION PLAN
1" = 10'-0"
L2.0

IRRIGATION LEGEND

SYM	MANUF.	MODEL NO.	DESCRIPTION	GPM	RAD.	PSI
TURF SPRINKLERS						
	RAINBIRD	1804 SERIES	5Q, 4" POP-UP TURF SPRAY HEAD	.1	5'	30
	RAINBIRD	1804 SERIES	5H, 4" POP-UP TURF SPRAY HEAD	.2	5'	30
	RAINBIRD	1804 SERIES	8Q, 4" POP-UP TURF SPRAY HEAD	.26	8'	30
	RAINBIRD	1804 SERIES	8H, 4" POP-UP TURF SPRAY HEAD	.52	8'	30
	RAINBIRD	1804 SERIES	8F, 4" POP-UP TURF SPRAY HEAD	1.05	8'	30
	RAINBIRD	1804 SERIES	10Q, 4" POP-UP TURF SPRAY HEAD	.39	10'	30
	RAINBIRD	1804 SERIES	10H, 4" POP-UP TURF SPRAY HEAD	.79	10'	30
	RAINBIRD	1804 SERIES	10F, 4" POP-UP TURF SPRAY HEAD	1.58	10'	30
	RAINBIRD	1804 SERIES	10VAN, 4" POP-UP TURF SPRAY HEAD	2.6	10'	30
	RAINBIRD	1804 SERIES	12Q, 4" POP-UP TURF SPRAY HEAD	.65	12'	30
	RAINBIRD	1804 SERIES	12H, 4" POP-UP TURF SPRAY HEAD	1.3	12'	30
	RAINBIRD	1804 SERIES	12F, 4" POP-UP TURF SPRAY HEAD	2.6	12'	30
	RAINBIRD	1804 SERIES	12VAN, 4" POP-UP TURF SPRAY HEAD	2.6	12'	30
	RAINBIRD	1804 SERIES	15Q, 4" POP-UP TURF SPRAY HEAD	.92	15'	30
	RAINBIRD	1804 SERIES	15H, 4" POP-UP TURF SPRAY HEAD	1.85	15'	30
	RAINBIRD	1804 SERIES	15F, 4" POP-UP TURF SPRAY HEAD	3.7	15'	30
	RAINBIRD	1804 SERIES	15VAN, 4" POP-UP TURF SPRAY HEAD	3.7	15'	30
SHRUB SPRINKLERS						
	RAINBIRD	1812 SERIES	8Q, 12" POP-UP SPRAY HEAD	.26	8'	30
	RAINBIRD	1812 SERIES	8H, 12" POP-UP SPRAY HEAD	.52	8'	30
	RAINBIRD	1812 SERIES	8F, 12" POP-UP SPRAY HEAD	1.05	8'	30
	RAINBIRD	1812 SERIES	8V, 12" POP-UP SPRAY HEAD	1.70	8'	30
	RAINBIRD	1812 SERIES	10Q, 12" POP-UP SPRAY HEAD	.39	10'	30
	RAINBIRD	1812 SERIES	10H, 12" POP-UP SPRAY HEAD	.79	10'	30
	RAINBIRD	1812 SERIES	10F, 12" POP-UP SPRAY HEAD	1.58	10'	30
	RAINBIRD	1812 SERIES	10VAN, 12" POP-UP SPRAY HEAD	2.6	10'	30
	RAINBIRD	1812 SERIES	12Q, 12" POP-UP SPRAY HEAD	.65	12'	30
	RAINBIRD	1812 SERIES	12H, 12" POP-UP SPRAY HEAD	1.3	12'	30
	RAINBIRD	1812 SERIES	12F, 12" POP-UP SPRAY HEAD	2.6	12'	30
	RAINBIRD	1812 SERIES	12VAN, 12" POP-UP SPRAY HEAD	2.6	12'	30
	RAINBIRD	1812 SERIES	15Q, 12" POP-UP SPRAY HEAD	.92	15'	30
	RAINBIRD	1812 SERIES	15H, 12" POP-UP SPRAY HEAD	1.85	15'	30
	RAINBIRD	1812 SERIES	15F, 12" POP-UP SPRAY HEAD	3.7	15'	30
	RAINBIRD	1812 SERIES	15VAN, 12" POP-UP SPRAY HEAD	3.7	15'	30
	RAINBIRD	1812 SERIES	15 EST, 12" POP-UP SPRAY HEAD	.61	4'x15'	30
	RAINBIRD	1812 SERIES	15 SST, 12" POP-UP SPRAY HEAD	1.21	4'x30'	30
BUBBLERS						
	RAINBIRD	1402 SERIES	PRESSUE COMPENSATING, FULL CIRCLE FLOOD BUBBLER	.50	TRICKLE	30
	RAINBIRD	1402 SERIES	PRESSUE COMPENSATING, FULL CIRCLE FLOOD BUBBLER IN DEEP WATERING TUBE	.50	TRICKLE	30
VALVES & CONTROLLER						
	RAINBIRD	PEB-NP SERIES	REMOTE CONTROL VALVE			
	NIBCO	T-113 SERIES	GATE VALVE (AS PER LINE SIZE)			
	RAINBIRD	44 NP	QUICK COUPLING VALVE			
C	RAINMASTER	EVOLUTION DX SERIES	18 STATION AUTOMATIC CONTROLLER PEDESTAL MOUNT			

NOTES:

1. DESIGN PSI = 85; DEMAND GPM = 27. CONTRACTOR TO TEST AND VERIFY THAT PRESSURE AND GPM ARE WITHIN 10% OF THESE RANGES PRIOR TO START OF WORK. IF NOT, NOTIFY OWNER'S REPRESENTATIVE PRIOR TO PROCEEDING WITH WORK. WATER SOURCE IS NON-POTABLE.
2. MAINLINE AND LATERAL IRRIGATION LINES ARE SHOWN IN PAVED AREAS FOR GRAPHIC CLARITY ONLY, INSTALL BOTH IN PLANTING AREAS.
3. INSTALL PIPING AS NOTED ON PLAN. SIZE LATERAL LINES IN ACCORDANCE WITH "LATERAL LINE SIZING CHART" BELOW.
4. LOCATE SLEEVES ORIGINATING AND ENDING IN PLANTING AREAS TO FACILITATE INSTALLING IRRIGATION LINES.
5. AVOID CUTTING TREE ROOTS. REFER TO SPECIFICATION 02060 FOR PLANT PROTECTION.
6. INSTALL GATE VALVES IN PLANTING AREAS.
7. INSTALL HEADS WITH MANUFACTURERS CHECK VALVES ON ZONES WHERE HEADS WILL EXPERIENCE LOW-END DRAINAGE. CONTRACTOR SHALL VERIFY GRADES WITH TOPOGRAPHICAL INFORMATION SHOWN ON DRAWINGS.
8. CALL USA UNDERGROUND ALERT, (800) 642-2444 AND AFFECTED UTILITY COMPANIES 48 HOURS BEFORE DIGGING.

IRRIGATION LEGEND CONTINUED

- MAIN LINE: 1120 SCHEDULE 40 ALERTLINE PVC PLASTIC PIPE WITH SCHEDULE 40 PVC PLASTIC SOLVENT WELDED FITTINGS; SIZE AS NOTED. (0)
- LATERAL LINE: 1120 SCHEDULE 40 ALERTLINE PVC PLASTIC PIPE WITH SCHEDULE 40 PVC PLASTIC SOLVENT WELDED FITTINGS; SIZE PER CHART.
- S — SLEEVE: PVC SCHEDULE 40 PLASTIC PIPE SLEEVE; SIZE AS NOTED.
- E IRR — EXISTING WATERLINE, SEE CIVIL DRAWINGS
- A-1 / 1" / 25.0 — CONTROLLER AND VALVE SEQUENCE / REMOTE CONTROL VALVE SIZE / APPROXIMATE GALLONS PER MINUTE

LATERAL LINE SIZING CHART

SPRINKLER TYPE	GPM	PIPE SIZE
SPRAYS & BUBBLERS	1 – 5	3/4"
	6 – 10	1"
	11 – 20	1 1/4"
	21 – 28	1 1/2"

(0)

ROYSTON HANAMOTO ALLEY & ABEY
R | H | A
LANDSCAPE ARCHITECTS & PLANNERS
225 Miller Avenue, Mill Valley, CA 94941, 415.383.7900, 415.383.1433 Fax, mvstudio@rhaa.com
323 Geary Street, #602, San Francisco, CA 94102, 415.861.7900, 415.861.7908 Fax, sfstudio@rhaa.com

DIABLO VALLEY COLLEGE

DIABLO VALLEY COLLEGE NEW BOOKSTORE

321 GOLF CLUB RD.
PLEASANT HILL, CALIFORNIA

DATE: 23 JULY, 2004

REVISIONS:
(0) REVISIONS- 23 JULY, 2004

LICENSED LANDSCAPE ARCHITECT — ADITYA ADVANI — STATE OF CALIFORNIA

BID SET

SHEET TITLE:
IRRIGATION PLAN

IDENTIFICATION STAMP
DIVISION OF THE STATE ARCHITECT
105925
APPL 01
AC LE FLS EN SS A1
DATE: 5-12-04 JUL 26 2004

BLDG. ID: 098
ID CODE: 312098-109.01-A

DRAWN BY: RG
CHECKED BY: AA
JOB NO: 0307

SHEET L2.0

12/3/03 L2.0IRRIGATION.DWG

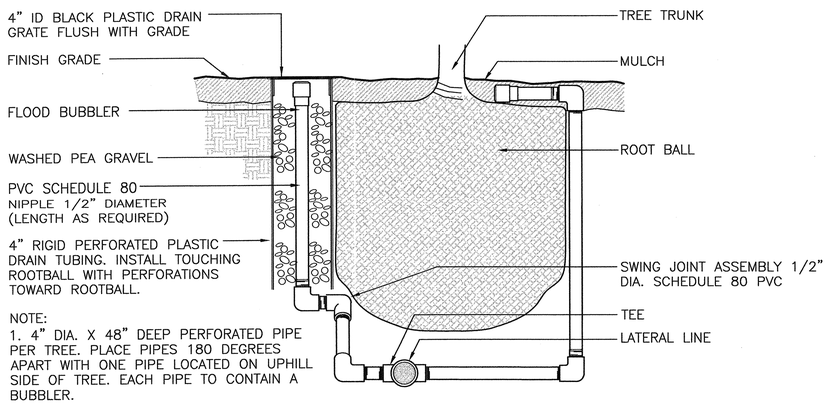

NOTE:
1. 4" DIA. X 48" DEEP PERFORATED PIPE PER TREE. PLACE PIPES 180 DEGREES APART WITH ONE PIPE LOCATED ON UPHILL SIDE OF TREE. EACH PIPE TO CONTAIN A BUBBLER.

SECTION

7 VERTICAL DEEP WATERING TREE BUBBLER

NOT TO SCALE — IRTBUB2_24

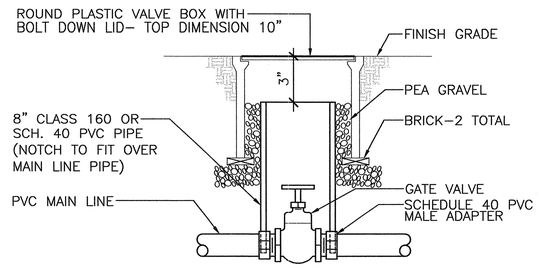

SECTION

4 GATE VALVE

NOT TO SCALE — IRGVLV24

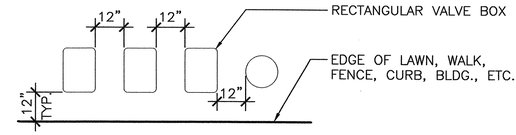

NOTES:

1. CENTER VALVE BOX OVER REMOTE CONTROL VALVE TO FACILITATE SERVICING VALVE.
2. SET BOXES 2" ABOVE FINISH SOIL GRADE GROUND COVER / SHRUB AREA 1/2" ABOVE FINISH SOIL GRADE IN TURF AREA UNLESS OTHERWISE REQUIRED.
3. TYPICALLY SET REMOTE CONTROL VALVE AND VALVE BOX ASSEMBLY IN GROUND COVER / SHRUB AREA.
4. SET BOXES PARALLEL TO EACH OTHER AND PERPENDICULAR TO EDGE OF LAWN, WALL, FENCE, CURB, ETC.
5. AVOID HEAVILY COMPACTING SOIL AROUND VALVE BOXES TO PREVENT COLLAPSE AND DEFORMATION OF VALVE BOX SIDES.
6. INSTALL EXTENSION BY VALVE BOX MANUFACTURER AS REQUIRED TO COMPLETELY ENCLOSE ASSEMBLY FOR EASY ACCESS.
7. PROVIDE CONCRETE BOXES WITH CONCRETE LIDS WHEN THEY OCCUR IN PAVEMENT AREAS.

PLAN

1 VALVE BOX LAYOUT

NOT TO SCALE — I_BOX32

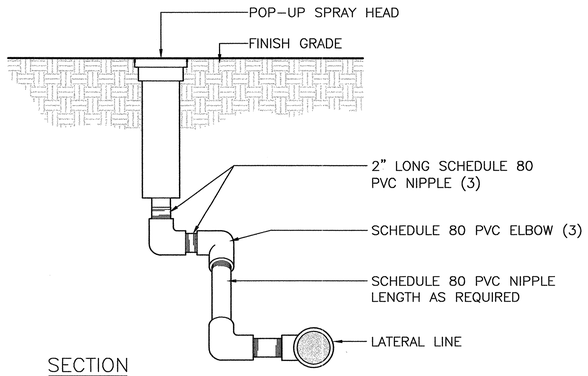

SECTION

5 POP-UP SPRAY ASSEMBLY

NOT TO SCALE — IRRPOP16

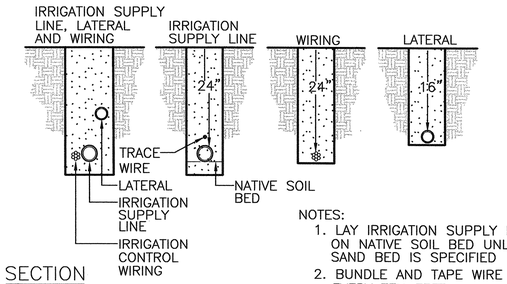

NOTES:
1. LAY IRRIGATION SUPPLY LINE ON NATIVE SOIL BED UNLESS SAND BED IS SPECIFIED
2. BUNDLE AND TAPE WIRE EVERY TEN FEET

SECTION

2 IRRIGATION TRENCHING

NOT TO SCALE — IRTRNCH4

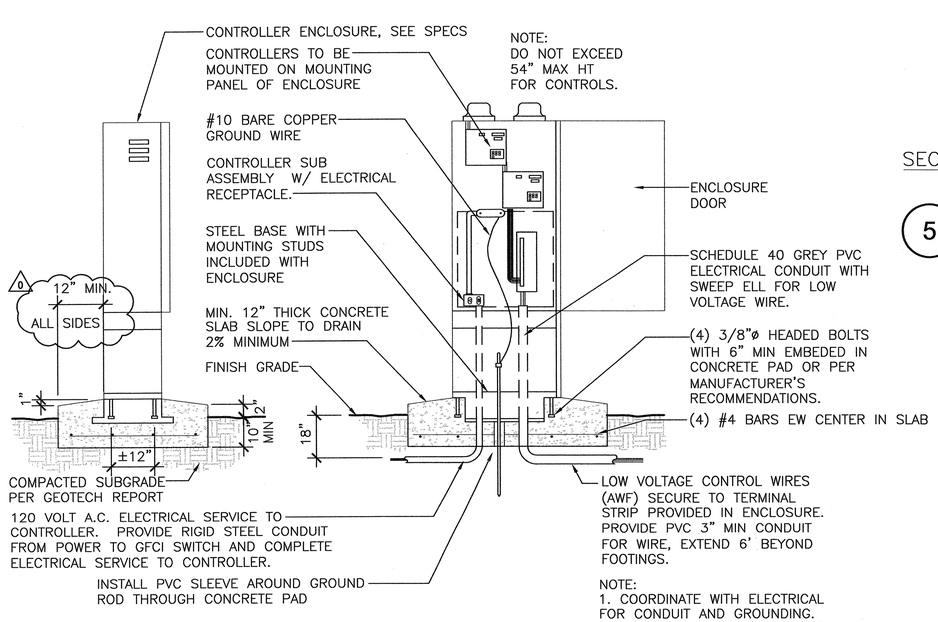

NOTE:
1. COORDINATE WITH ELECTRICAL FOR CONDUIT AND GROUNDING.
2. PEDESTAL MOUNT INSTALLATION IN CONCRETE FOOTING SHALL BE PER MANUFACTURER'S RECOMMENDATIONS.

SECTION

8 PEDESTAL MOUNT CONTROLLER

NOT TO SCALE — IRCTRW16

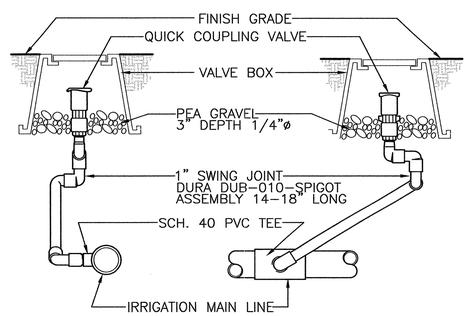

SECTION

6 QUICK COUPLING VALVE

NOT TO SCALE — IRRQCV24

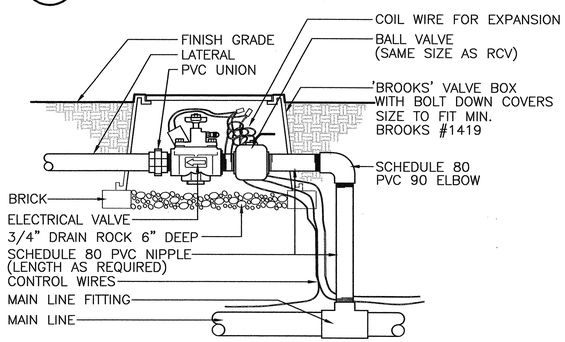

NOTES:
1. BUNDLE AND TAPE WIRE EVERY 10 FEET
2. PROVIDE 36" EXPANSION LOOP AT EACH WIRE CONNECTION
3. SIZE BOX TO INCLUDE RCV AND BALL VALVES. INSTALL IN PLANTING AREAS.

SECTION

3 REMOTE CONTROL VALVE

NOT TO SCALE — IRRCV24

ROYSTON HANAMOTO ALLEY & ABEY
R | H | A
LANDSCAPE ARCHITECTS & PLANNERS
225 Miller Avenue, Mill Valley, CA 94941, 415.383.7900, 415.383.1433 Fax, rmvstudio@rhaa.com
323 Geary Street, #602, San Francisco, CA 94102, 415.861.7900, 415.861.7908 Fax, sfstudio@rhaa.com

DIABLO VALLEY COLLEGE NEW BOOKSTORE

321 GOLF CLUB RD.
PLEASANT HILL, CALIFORNIA

DATE: 23 JULY, 2004

REVISIONS:
0 REVISIONS– 23 JULY, 2004

LICENSED LANDSCAPE ARCHITECT — ADITYA ADVANI NO. 4824 — STATE OF CALIFORNIA

BID SET

SHEET TITLE:
IRRIGATION DETAILS

IDENTIFICATION STAMP
DIVISION OF THE STATE ARCHITECT
APPL 01 105925
AC LE FLS EO SS A1
DATE: 5-12-04 JUL 26 2004

BLDG. ID: 098
ID CODE: 312098–109.01–A

DRAWN BY: RG
CHECKED BY: AA
JOB NO: 0307
SHEET L2.1

12/3/03 L2-IRRDET.DWG

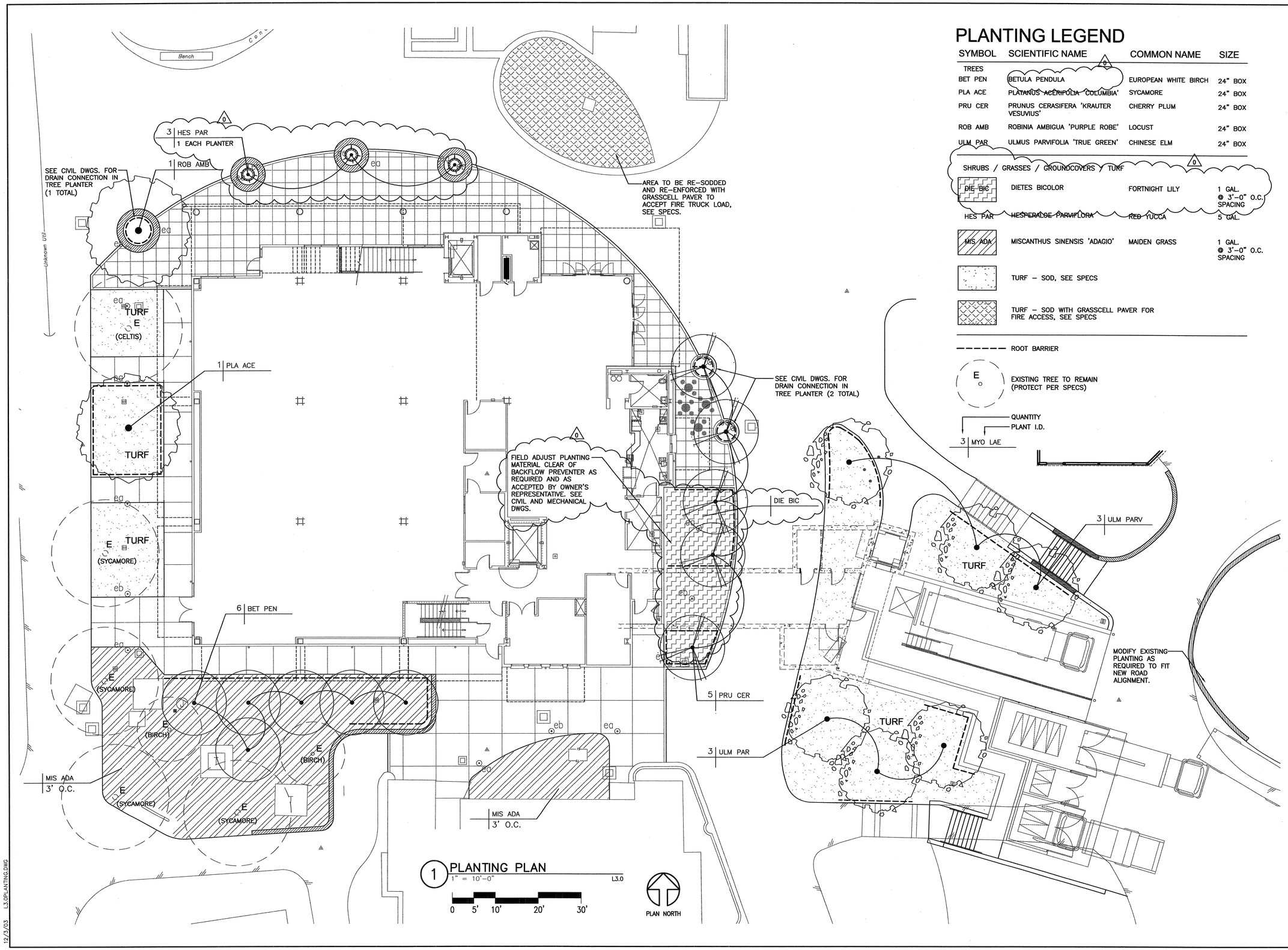

1 PLANTING PLAN
1" = 10'-0"
L3.0

PLANTING LEGEND

SYMBOL	SCIENTIFIC NAME	COMMON NAME	SIZE
TREES			
BET PEN	BETULA PENDULA	EUROPEAN WHITE BIRCH	24" BOX
PLA ACE	PLATANUS ACERIFOLIA 'COLUMBIA'	SYCAMORE	24" BOX
PRU CER	PRUNUS CERASIFERA 'KRAUTER VESUVIUS'	CHERRY PLUM	24" BOX
ROB AMB	ROBINIA AMBIGUA 'PURPLE ROBE'	LOCUST	24" BOX
ULM PAR	ULMUS PARVIFOLIA 'TRUE GREEN'	CHINESE ELM	24" BOX
SHRUBS / GRASSES / GROUNDCOVERS / TURF			
DIE BIC	DIETES BICOLOR	FORTNIGHT LILY	1 GAL. @ 3'-0" O.C. SPACING
HES PAR	HESPERALOE PARVIFLORA	RED YUCCA	5 GAL.
MIS ADA	MISCANTHUS SINENSIS 'ADAGIO'	MAIDEN GRASS	1 GAL. @ 3'-0" O.C. SPACING
	TURF – SOD, SEE SPECS		
	TURF – SOD WITH GRASSCELL PAVER FOR FIRE ACCESS, SEE SPECS		

ROOT BARRIER

E — EXISTING TREE TO REMAIN (PROTECT PER SPECS)

QUANTITY
PLANT I.D.
3 MYO LAE

ROYSTON HANAMOTO ALLEY & ABEY
R | H | A | A
LANDSCAPE ARCHITECTS & PLANNERS
225 Miller Avenue
Mill Valley, CA 94941
415.383.7900
415.383.1433 Fax
mvstudio@rhaa.com
323 Geary Street, #602
San Francisco, CA 94102
415.861.7900
415.861.7908 Fax
sfstudio@rhaa.com

DIABLO VALLEY COLLEGE

DIABLO VALLEY COLLEGE NEW BOOKSTORE

321 GOLF CLUB RD.
PLEASANT HILL, CALIFORNIA

DATE: 23 JULY, 2004

REVISIONS:
0 REVISIONS– 23 JULY, 2004

LICENSED LANDSCAPE ARCHITECT
ADITYA ADVANI NO. 4524
Signature
6/30/05
Renewal Date
7/22/04
Date
STATE OF CALIFORNIA

BID SET

SHEET TITLE:
PLANTING PLAN

IDENTIFICATION STAMP
DIVISION OF THE STATE ARCHITECT
105925
APPL 01
AC LE FLS ED SS A1
DATE: 5-12-04 JUL 26 2004

BLDG. ID: 098
ID CODE: 312098-109.01-A

DRAWN BY: RG
CHECKED BY: AA
JOB NO: 0307

SHEET
L3.0

12/3/03 L3.0PLANTING.DWG

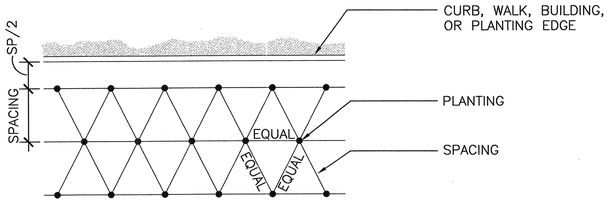

SECTION

5 GROUND COVER PLANTING LAYOUT

NOT TO SCALE PLGCVR24

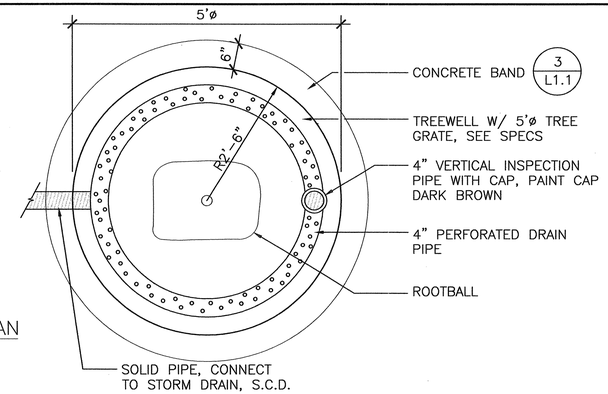

PLAN

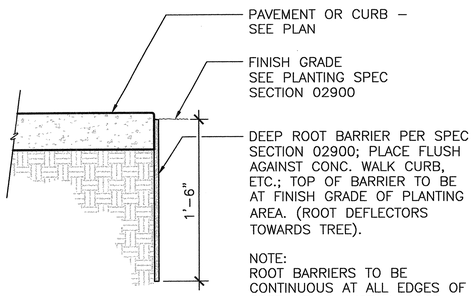

NOTE:
ROOT BARRIERS TO BE CONTINUOUS AT ALL EDGES OF TREE WELLS. INSTALL ROOT BARRIER AT WALKS AND CURBS WHERE TREES ARE LOCATED WITHIN 6'-0" OF PAVING, FOR A DISTANCE OF 8'-0" MIN. EACH SIDE OF CENTERLINE TREE.

SECTION

6 ROOT BARRIER

NOT TO SCALE PLRTBAR8

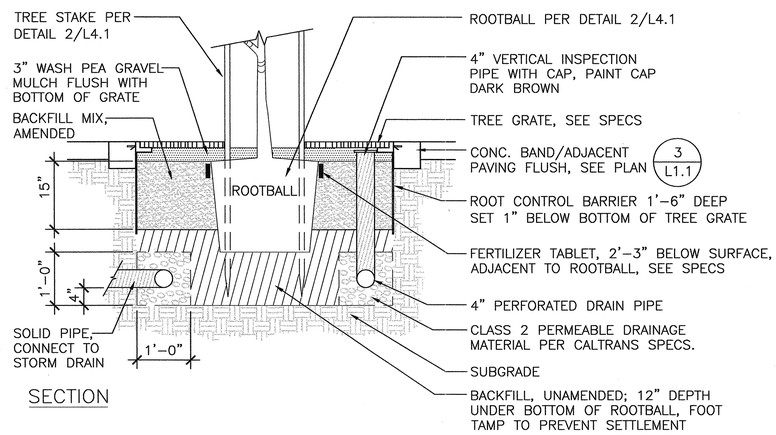

SECTION

3 TREE PLANTER WITH GRATE

NOT TO SCALE TREEGR16

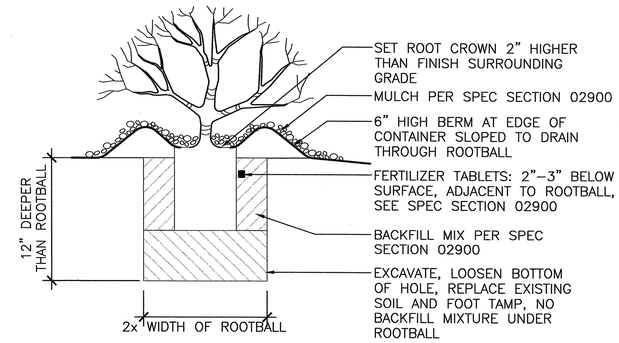

SECTION

1 SHRUB PLANTING

NOT TO SCALE PLSHRB16

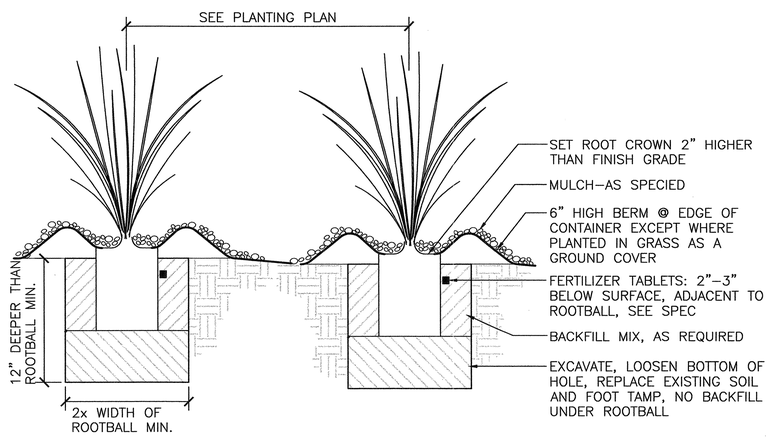

SECTION

4 ORNAMENTAL GRASS PLANTING

NOT TO SCALE PGRASS16

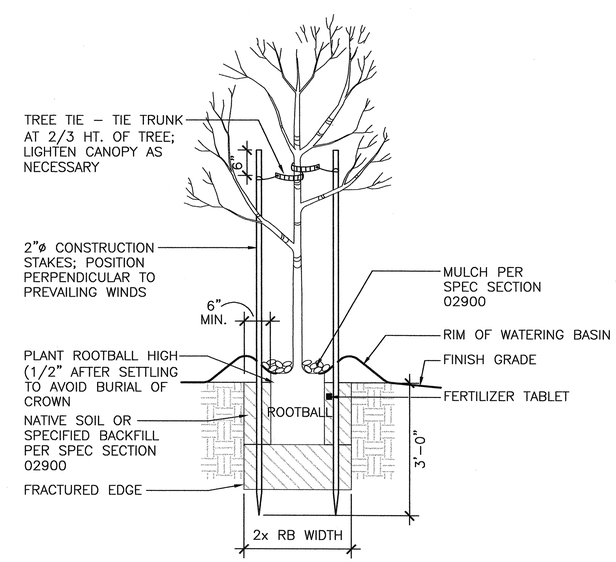

NOTES:

1. EXCAVATE FOR CONTAINER–GROWN PLANTS TO THE FOLLOWING: TREES: WIDTH=2X CONTAINER WIDTH; DEPTH = CONTAINER DEPTH
2. STAKES TO BE USED ONLY IF PLANT CAN NOT STAND ALONE IN WIND CONDITIONS OF THE SITE

SECTION

2 TREE STAKING

NOT TO SCALE PLTRSK16

ROYSTON HANAMOTO ALLEY & ABEY
R | H | A
LANDSCAPE ARCHITECTS & PLANNERS
225 Miller Avenue
Mill Valley, CA 94941
415.383.7900
415.383.1433 Fax
mvstudio@rhaa.com
323 Geary Street, #602
San Francisco, CA 94102
415.861.7900
415.861.7908 Fax
sfstudio@rhaa.com

DIABLO VALLEY COLLEGE

DIABLO VALLEY COLLEGE NEW BOOKSTORE

321 GOLF CLUB RD.
PLEASANT HILL, CALIFORNIA

DATE: 23 JULY, 2004

REVISIONS:

LICENSED LANDSCAPE ARCHITECT
ADITYA ADVANI NO. 4624
Aditya Advani
Expiration 12/31/05
Registered State CALIFORNIA
STATE OF CALIFORNIA

BID SET

SHEET TITLE:
PLANTING DETAIL

IDENTIFICATION STAMP
DIVISION OF THE STATE ARCHITECT
105925
APPL 01
AC LE FLS EO SS A1
DATE: 5-12-04 JUL 26 2004

BLDG. ID: 098
ID CODE: 312098–109.01–A

DRAWN BY: RG
CHECKED BY: AA
JOB NO: 0307

SHEET L3.1

12/3/03 L3.1PlantDet.DWG

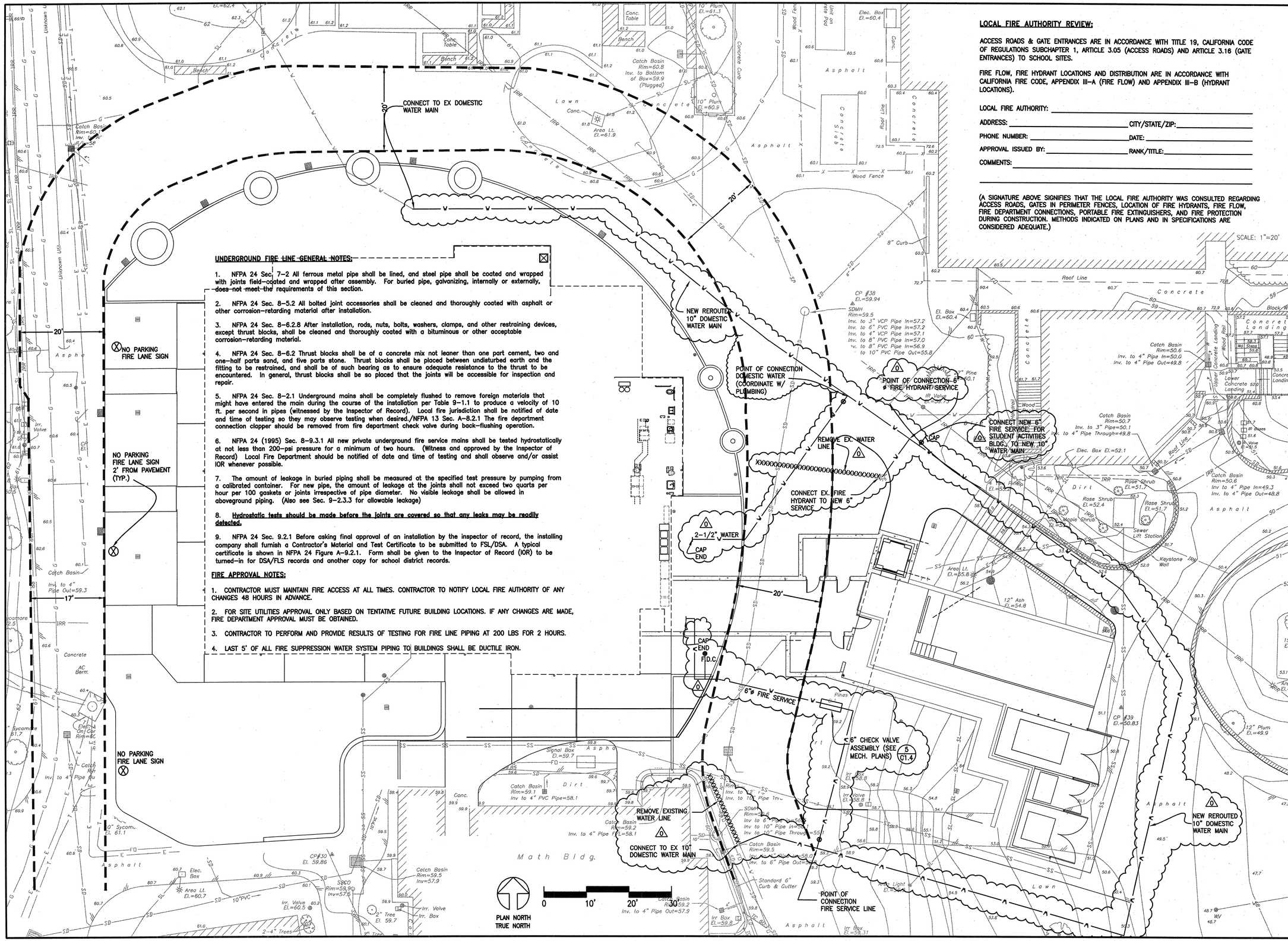

UNDERGROUND FIRE LINE GENERAL NOTES:

1. NFPA 24 Sec. 7-2 All ferrous metal pipe shall be lined, and steel pipe shall be coated and wrapped with joints field-coated and wrapped after assembly. For buried pipe, galvanizing, internally or externally, does not meet the requirements of this section.

2. NFPA 24 Sec. 8-5.2 All bolted joint accessories shall be cleaned and thoroughly coated with asphalt or other corrosion-retarding material after installation.

3. NFPA 24 Sec. 8-6.2.8 After installation, rods, nuts, bolts, washers, clamps, and other restraining devices, except thrust blocks, shall be cleaned and thoroughly coated with a bituminous or other acceptable corrosion-retarding material.

4. NFPA 24 Sec. 8-6.2 Thrust blocks shall be of a concrete mix not leaner than one part cement, two and one-half parts sand, and five parts stone. Thrust blocks shall be placed between undisturbed earth and the fitting to be restrained, and shall be of such bearing as to ensure adequate resistance to the thrust to be encountered. In general, thrust blocks shall be so placed that the joints will be accessible for inspection and repair.

5. NFPA 24 Sec. 8-2.1 Underground mains shall be completely flushed to remove foreign materials that might have entered the main during the course of the installation per Table 9-1.1 to produce a velocity of 10 ft. per second in pipes (witnessed by the Inspector of Record). Local fire jurisdiction shall be notified of date and time of testing so they may observe testing when desired./NFPA 13 Sec. A-8.2.1 The fire department connection clapper should be removed from fire department check valve during back-flushing operation.

6. NFPA 24 (1995) Sec. 8-9.3.1 All new private underground fire service mains shall be tested hydrostatically at not less than 200-psi pressure for a minimum of two hours. (Witness and approved by the Inspector of Record) Local Fire Department should be notified of date and time of testing and shall observe and/or assist IOR whenever possible.

7. The amount of leakage in buried piping shall be measured at the specified test pressure by pumping from a calibrated container. For new pipe, the amount of leakage at the joints shall not exceed two quarts per hour per 100 gaskets or joints irrespective of pipe diameter. No visible leakage shall be allowed in aboveground piping. (Also see Sec. 9-2.3.3 for allowable leakage)

8. <u>Hydrostatic tests should be made before the joints are covered so that any leaks may be readily detected.</u>

9. NFPA 24 Sec. 9.2.1 Before asking final approval of an installation by the inspector of record, the installing company shall furnish a Contractor's Material and Test Certificate to be submitted to FSL/DSA. A typical certificate is shown in NFPA 24 Figure A-9.2.1. Form shall be given to the inspector of Record (IOR) to be turned-in for DSA/FLS records and another copy for school district records.

FIRE APPROVAL NOTES:

1. CONTRACTOR MUST MAINTAIN FIRE ACCESS AT ALL TIMES. CONTRACTOR TO NOTIFY LOCAL FIRE AUTHORITY OF ANY CHANGES 48 HOURS IN ADVANCE.

2. FOR SITE UTILITIES APPROVAL ONLY BASED ON TENTATIVE FUTURE BUILDING LOCATIONS. IF ANY CHANGES ARE MADE, FIRE DEPARTMENT APPROVAL MUST BE OBTAINED.

3. CONTRACTOR TO PERFORM AND PROVIDE RESULTS OF TESTING FOR FIRE LINE PIPING AT 200 LBS FOR 2 HOURS.

4. LAST 5' OF ALL FIRE SUPPRESSION WATER SYSTEM PIPING TO BUILDINGS SHALL BE DUCTILE IRON.

LOCAL FIRE AUTHORITY REVIEW:

ACCESS ROADS & GATE ENTRANCES ARE IN ACCORDANCE WITH TITLE 19, CALIFORNIA CODE OF REGULATIONS SUBCHAPTER 1, ARTICLE 3.05 (ACCESS ROADS) AND ARTICLE 3.16 (GATE ENTRANCES) TO SCHOOL SITES.

FIRE FLOW, FIRE HYDRANT LOCATIONS AND DISTRIBUTION ARE IN ACCORDANCE WITH CALIFORNIA FIRE CODE, APPENDIX III-A (FIRE FLOW) AND APPENDIX III-B (HYDRANT LOCATIONS).

LOCAL FIRE AUTHORITY: _____

ADDRESS: _____ CITY/STATE/ZIP: _____

PHONE NUMBER: _____ DATE: _____

APPROVAL ISSUED BY: _____ RANK/TITLE: _____

COMMENTS: _____

(A SIGNATURE ABOVE SIGNIFIES THAT THE LOCAL FIRE AUTHORITY WAS CONSULTED REGARDING ACCESS ROADS, GATES IN PERIMETER FENCES, LOCATION OF FIRE HYDRANTS, FIRE FLOW, FIRE DEPARTMENT CONNECTIONS, PORTABLE FIRE EXTINGUISHERS, AND FIRE PROTECTION DURING CONSTRUCTION. METHODS INDICATED ON PLANS AND IN SPECIFICATIONS ARE CONSIDERED ADEQUATE.)

LEPTIEN, CRONIN, COOPER, MORRIS & POORE, INC.
dba LCC, Inc.
Civil Engineering - Land Surveying
930 Estudillo Street
Martinez, California 94553-1620
(925) 228-4218 Fax (925) 228-4638
LCC Job No. 2003.039
REGISTERED PROFESSIONAL ENGINEER No. 18823 Exp. 09/30/05 CIVIL STATE OF CALIFORNIA

DIABLO VALLEY COLLEGE
NEW BOOKSTORE

321 GOLF CLUB RD.
PLEASANT HILL, CALIFORNIA

DATE: 23 JULY, 2004

REVISIONS:

0 REVISIONS- 23 JULY, 2004

BID SET

SHEET TITLE:

FIRE LANE ROUTE EXHIBIT

IDENTIFICATION STAMP
DIVISION OF THE STATE ARCHITECT
APPL 01 105925
AC LE FLS ED SS AJ
DATE: 5-12-04 JUL 26 2004

BLDG. ID: 098
ID CODE: 312098-109.01-A

DRAWN BY:
CHECKED BY:
JOB NO:

SHEET C1.6

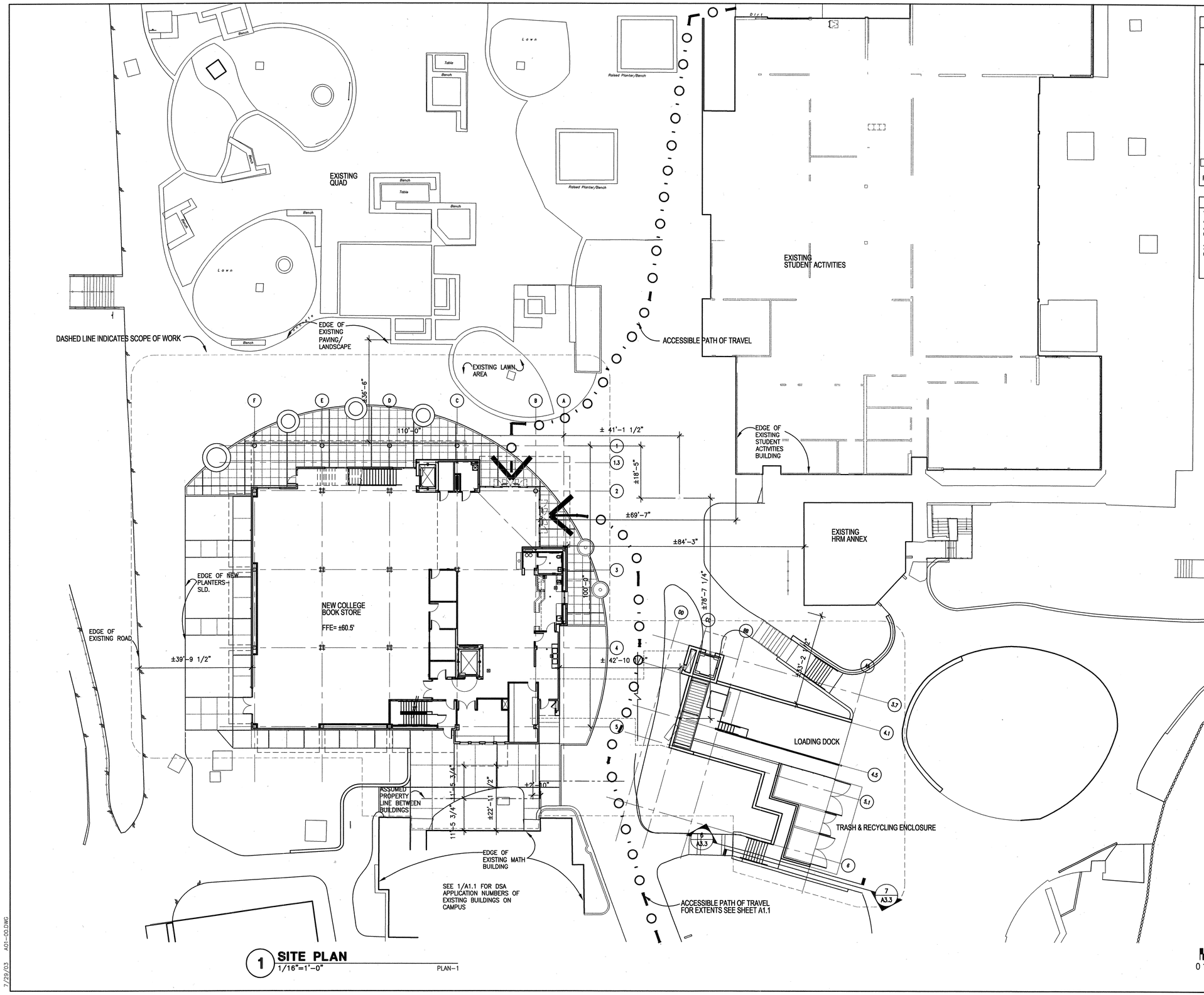

1 **SITE PLAN**
1/16"=1'-0"

PLAN-1

SITE PLAN LEGEND

PAVING- SCD & SLD FOR ACCESSIBLE STRIPING/GRAPHICS-SCD

ACCESSIBLE PATH-SCD
PATH OF TRAVEL (P.O.T.) AS INDICATED IS A BARRIER FREE ACCESS WITHOUT ANY ABRUPT VERTICAL CHANGES EXCEEDING 1/2" AT 1:2 MAXIMUM SLOPE, EXCEPT THAT LEVEL CHANGES DO NOT EXCEED 1/4" VERTICAL. MAXIMUM CROSS-SLOPE 2% TYPICAL. THE CONTRACTORE SHALL VERIFY THAT ALL BARRIERS ON THE INDICATED PATH OF TRAVEL HAVE BEEN REMOVED.

X/X ACCESSIBLE SIGNAGE

FOR EXTENT OF LANDSCAPING SLD

SITE PLAN SHEET NOTES

1) SHEET A1.0 IS AN ARCHITECTURAL SITE PLAN AND MEANT TO BE USED TO DELINEATE THE ASSUMED PROPERTY LINE AND BUILDING CLEARANCES.

2) FOR HORIZONTAL CONTROL PLAN AND LOCATION OF SITE UTILITIES -REFER TO CIVIL DRAWINGS

BSA
Architects
A California Corporation
350 PACIFIC AVENUE
SAN FRANCISCO, CA 94111
415-781-1526

DIABLO VALLEY COLLEGE

DIABLO VALLEY COLLEGE NEW BOOKSTORE

321 GOLF CLUB RD.
PLEASANT HILL, CALIFORNIA

© 2003 BSA Architects
"All drawings and written material appearing herein constitute the original and unpublished work of the architect and the same may not be duplicated, used, or disclosed without the written consent of the architect."

DATE: 23 JULY, 2004

REVISIONS:

LICENSED ARCHITECT JOHN ASHWORTH No. C26747 REN. 1-31-05 STATE OF CALIFORNIA

BID SET

SHEET TITLE:

ARCHITECTURAL SITE PLAN

IDENTIFICATION STAMP
DIVISION OF THE STATE ARCHITECT
APPL 01 105925
AC LE FLS ED SS A1
DATE: 5-12-04 JUL 26 2004

BLDG. ID: 098
ID CODE: 312098-109.01-A

DRAWN BY: GL
CHECKED BY: JA
JOB NO: 0307

SHEET A1.0

7/29/03 A01-00.DWG

ACCESSIBLE PARKING LOCATIONS					
LOT NO.	BUILDING	DSA # OVER 61000	STANDARD ACCESSIBLE STALLS	ACCESSIBLE VAN STALLS	TOTAL # STALLS IN LOT
1	M	01-101016	7	4	363
2	ET	**	0	0	94
3	L	01-101337	9	1	318
4	LS	01-104333 UNDER CONSTRUCTION	4	2	397
5	FA	01-100728	3	1	207
6	*	**	0	0	267
7	BFL	01-101859	16	4	330
8	*	**	4	0	450
9	PE/WM	**	0	0	215
9A	H	01-104472	3	0	122
10	SU	64139	2	0	50
10A	WL	01-104864 UNDER CONSTRUCTION	3	1	4
TL SITE	TL	01-105599 CURRENT APPLICATION	*	*	*
SC	SC	**	2	0	6
STALL TOTALS			53	13	2823

**= BELOW 61000

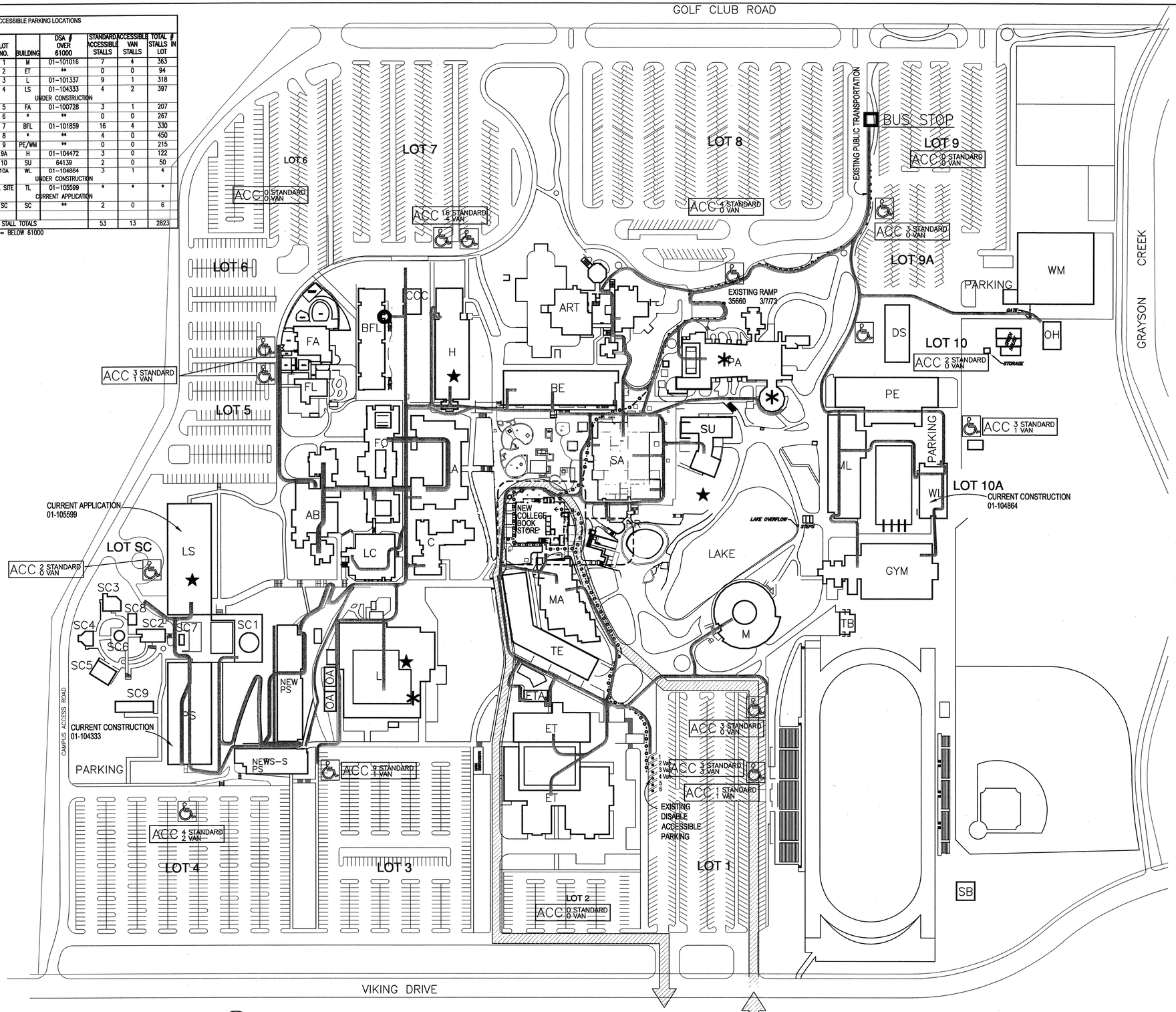

1 **SITE PLAN -ACCESSIBLE PATH OF TRAVEL**
1"=100'-0"
SITEPOT

LEGEND

- PAVING- SCD & SLD FOR ACCESSIBLE STRIPING/GRAPHICS-SCD
- ACCESSIBLE PATH-SCD — PATH OF TRAVEL (P.O.T.) AS INDICATED IS A BARRIER FREE ACCESS WITHOUT ANY ABRUPT VERTICAL CHANGES EXCEEDING 1/2" AT 1:2 MAXIMUM SLOPE, EXCEPT THAT LEVEL CHANGES DO NOT EXCEED 1/4" VERTICAL. MAXIMUM CROSS-SLOPE 2% TYPICAL. THE CONTRACTORE SHALL VERIFY THAT ALL BARRIERS ON THE INDICATED PATH OF TRAVEL HAVE BEEN REMOVED.
- EXISTING ACCESSIBLE PATH-BY CCCCD
- X/X ACCESSIBLE SIGNAGE
- ELEVATOR
- TDD PAY PHONE
- ASSISTIVE LISTENING DEVICE AVAILABLE
- PARKING

FOR EXTENT OF LANDSCAPING -SLD

LOCAL FIRE AUTHORITY REVIEW:
• ACCESS ROADS & GATE ENTRANCES ARE IN ACCORDANCE WITH TITLE 19, CALIFORNIA CODE OF REGULATIONS
SUBCHAPTER 1, ARTICLE 3.05 (ACCESS ROADS) AND ARTICLE 3.16 (GATE ENTRANCES) TO SCHOOL SITES.
• FIRE FLOW, FIRE HYDRANT LOCATION AND DISTRIBUTION ARE IN ACCORDANCE WITH CALIFORNIA FIRE CODE,
APPENDIX III-A (FIRE FLOW) AND APPENDIX III-B (HYDRANT LOCATIONS).

LOCAL FIRE AUTHORITY: CONTRA COSTA FIRE PROTECTION DISTRICT
ADDRESS: 2010 GEARY ROAD
CITY/STATE/ZIP: PLEASANT HILL, CA 94523-4694
PHONE NUMBER: 925/930-5545

DATE: _____

APPROVAL ISSUED BY: _____
RANK/TITLE: _____

COMMENTS: _____

(A WET SIGNATURE ABOVE SIGNIFIES THAT THE LOCAL FIRE AUTHORITY WAS CONSULTED REGARDING ACCESS ROADS, GATES IN PERIMETER FENCES, LOCATION OF FIRE HYDRANTS, FIRE FLOW, FIRE DEPARTMENT CONNECTIONS, PORTABLE FIRE EXTINGUISHERS, AND FIRE PROTECTION DURING CONSTRUCTION. METHODS INDICATED ON PLANS AND IN SPECIFICATIONS ARE CONSIDERED ADEQUATE.)

DSA APPLICATION NUMBERS				
PLAN KEY & PROJECT NAME		APP.	NUMBER	DATE
A	ART BUILDING	SAN	35660	3/7/73
B	BUSINESS EDUCATION BLDG.	SAN	10974	8/3/53
		SAN	10974	8/15/55
		SAN	33415	8/21/70
		SAN	33848	1/15/71
		SAN	35452	6/8/72
		SAN	304537	5/28/76
BFL	BUSINESS AND LANGUAGE BUILDING	DSA	101859	4/7/00
C	COUNSELING BLDG.	SAN	33639	1/8/71
SA/CC	STUDENT ACTIVITIES/COLLEGE CTR.	SAN	13867	12/19/55
		SAN	13331	2/8/60
		SAN	33332	10/15/70
E	ENGINEERING TECHNOLOGY	SAN	32247	10/3/69
F	FAMILY LIFE EDUCATION BLDG.	SAN	41210	4/17/78
FA	FAMILY LIFE ANNEX			
FO	FACULTY OFFICES	SAN	33638	1/8/71
FS	FOOD SERVICE LAB	SAN	46144	4/3/85
		SAN	47991	4/30/87
G	GYMNASIUM (PHYSICAL EDUCATION OFFICES)	SAN	15946	6/6/57
		SAN	3480	3/6/72
H	HUMANITIES BLDG.	SAN	23213	3/20/63
				7/12/63
				11/1/63
I	INSTRUCTIONAL SERVICES BLDG.	SAN	34545	11/8/71
L	LEARNING RESOURCES CTR. (COMPUTER LAB)	SAN	31075	11/19/68
		SAN	47228	10/29/86
		SAN	55111	12/14/90
LA	LIBERAL ARTS BLDG.	SAN	33638	1/8/71
LS	LIFE SCIENCES BLDG.	SAN	17818	12/17/58
		SAN	36915	3/15/74
M	MUSIC BLDG.	SAN	22255	5/7/62
MA	MATHEMATICS BLDG.	DSA	65770	7/10/97
ML	MEN'S LOCKER BLDG.	SAN	20357	9/23/60
		SAN	33039	5/19/70
MT	MAINTENANCE			
O	ORNAMENTAL HORTICULTURE			
P	PHYSICAL EDUCATION BLDG.	SAN	29711	9/22/67
PA	PERFORMING ARTS CTR.	SAN	21841	10/25/61
		SAN	33039	5/19/70
PS	PHYSICAL SCIENCES BLDG.	SAN	19598	3/14/60
		SAN	36915	3/15/74
		DSA	69893	3/10/98
S	SCIENCE BUILDING COMPLEX	SAN	37358	10/31/74
SC	SKILLS CTR.	SAN	33638	1/8/71
		SAN	55252	7/25/91
SM	SCIENCE MUSEUM	SAN	17818	12/17/58
		SAN	36015	3/15/74
SP	STUDENT PERSONNEL	SAN	34415	8/31/71
SU	STUDENT UNION	DSA	64139	4/17/96
T	TECHNICAL EDUCATION BLDG.	SAN	10148	9/ /57
W	WAREHOUSE/MAINTENANCE	SAN	21841	10/25/61
WL	WOMEN'S LOCKER BUILDING	SAN	33039	5/19/70

THIS DRAWING IS FOR REFERENCE ONLY. IT DESCRIBES THE ACCESSIBLE AND FIRE ACCESS ROUTES THRIUGH THE COLLGE CAMPUS TO THE BOOKSTORE PROJECT. REFER TO THE CIVIL DRAWINGS FOR THE FIRE ACCESS ROUTE AND CLEARANCES AT THE BOOKSTORE.

0 10' 50' 150' 300'

PLAN NORTH

BSA Architects
A California Corporation
350 PACIFIC AVENUE
SAN FRANCISCO, CA 94111
415-781-1526

DIABLO VALLEY COLLEGE

DIABLO VALLEY COLLEGE NEW BOOKSTORE

321 GOLF CLUB RD.
PLEASANT HILL, CALIFORNIA

© 2003 BSA Architects
"All drawings and written material appearing herein constitute the original and unpublished work of the architect and the same may not be duplicated, used, or disclosed without the written consent of the architect."

DATE: 23 JULY, 2004

REVISIONS:

LICENSED ARCHITECT JOHN ASHWORTH No. C26747 REN. 1-31-05 STATE OF CALIFORNIA

BID SET

SHEET TITLE:
CAMPUS SITE PLAN

IDENTIFICATION STAMP
DIVISION OF THE STATE ARCHITECT
105925
APPL 01
AC LE FLS ED SS A1
DATE: 5-12-04 JUL 2 6 2004

BLDG. ID: 098
ID CODE: 312098-109.01-A

DRAWN BY: GL
CHECKED BY: JA
JOB NO: 0307

SHEET A1.1

7/29/03 A01-01.DWG

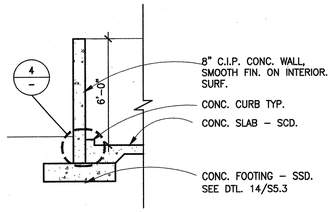

A SECTION
1/4"=1'-0"

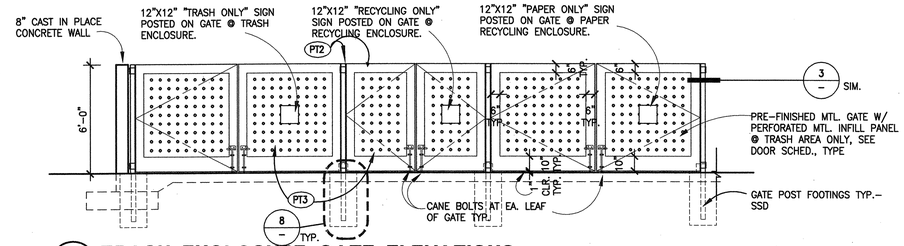

B TRASH ENCLOSURE GATE ELEVATIONS
1/4"=1'-0"

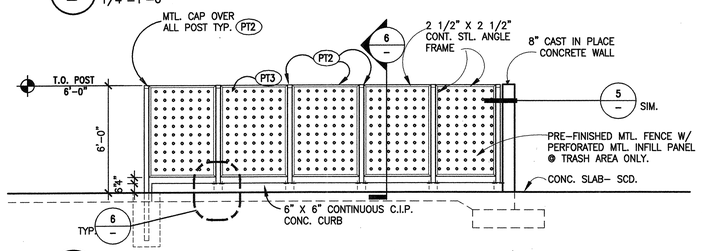

C TRASH ENCLOSURE SIDE FENCE ELEVATION
1/4"=1'-0"

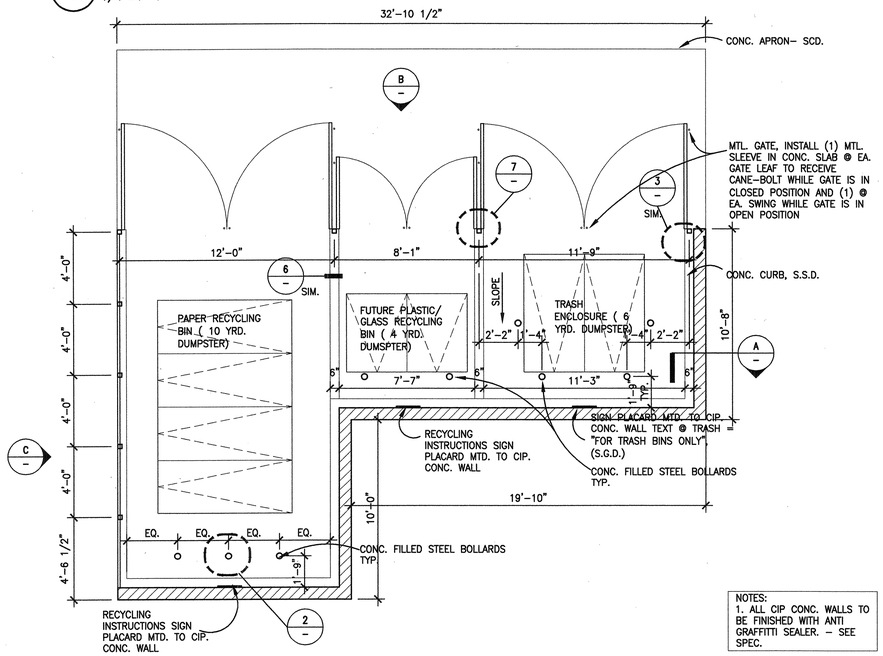

NOTES:
1. ALL CIP CONC. WALLS TO BE FINISHED WITH ANTI GRAFFITTI SEALER. – SEE SPEC.

12 TRASH & RECYCLING ENCLOSURE
SCALE: 1/4"=1'-0"
TRASH

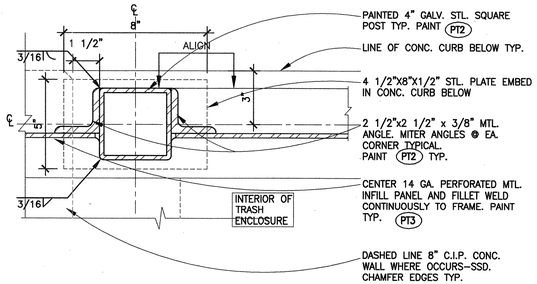

5 FENCE POST @ TRASH ENCLOSURE
SCALE: 3"=1'-0" (PLAN DETAIL) SFENCE1

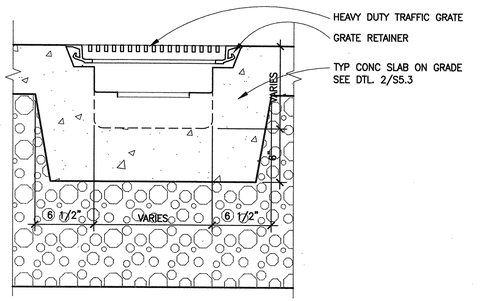

1 TRENCH DRAIN @ SLAB ON GRADE
SCALE: 1 1/2"=1'-0" EDRNSLB1

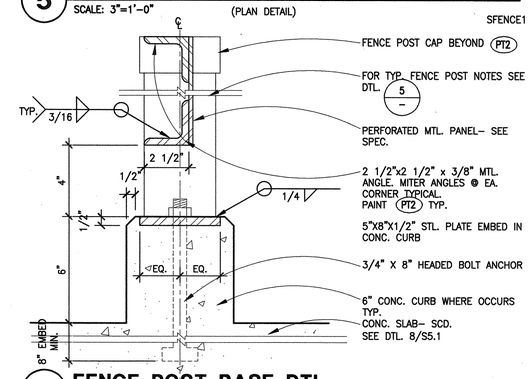

6 FENCE POST BASE DTL.
SCALE: 3"=1'-0" SFENCE2

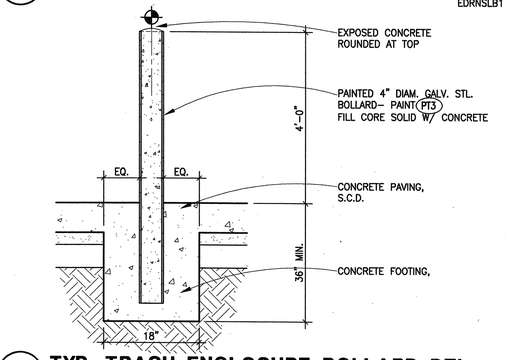

2 TYP. TRASH ENCLOSURE BOLLARD DTL.
SCALE: 1"=1'-0" LBOLDTL1

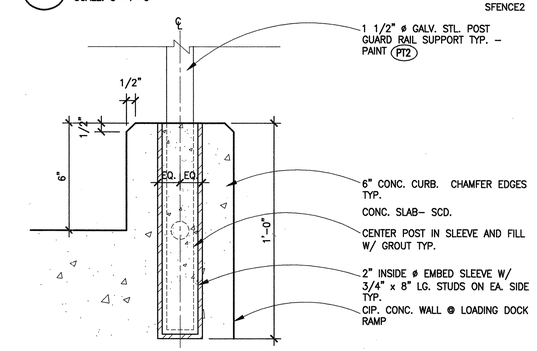

7 GUARD RAIL BASE @ CIP. CONC.
SCALE: 3"=1'-0" SGRDRAL1

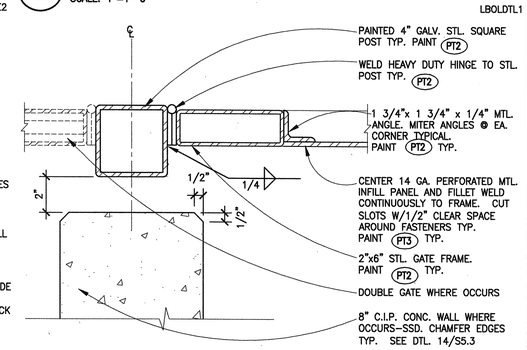

3 GATE POST @ TRASH ENCLOSURE
SCALE: 3"=1'-0" (PLAN DETAIL) SCMUGAT1

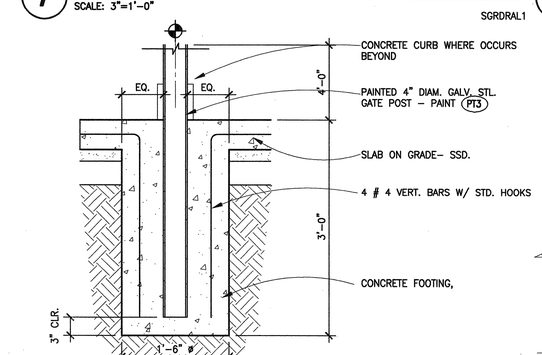

8 TRASH ENCLOSURE GATE POST DTL.
SCALE: 1"=1'-0" LGATPST1

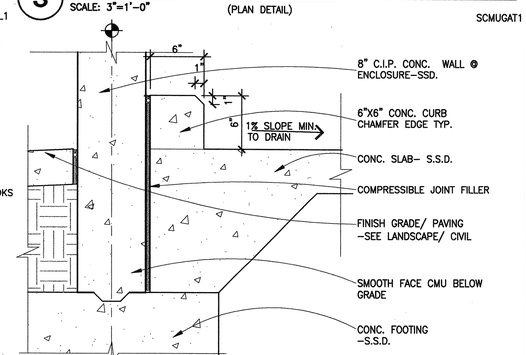

4 CONC. CURB @ TRASH ENCLOSURE
SCALE: 1 1/2"=1'-0" ECIPFTG1

BSA Architects
A California Corporation
350 PACIFIC AVENUE
SAN FRANCISCO, CA 94111
415-781-1526

DIABLO VALLEY COLLEGE

DIABLO VALLEY COLLEGE NEW BOOKSTORE

321 GOLF CLUB RD.
PLEASANT HILL, CALIFORNIA

© 2003 BSA Architects
"All drawings and written material appearing herein constitute the original and unpublished work of the architect and the same may not be duplicated, used, or disclosed without the written consent of the architect."

DATE: 23 JULY, 2004

REVISIONS:

LICENSED ARCHITECT JOHN ASHWORTH No. C26747 REN. 1-31-05 STATE OF CALIFORNIA

BID SET

SHEET TITLE:
SITE DETAILS

IDENTIFICATION STAMP
DIVISION OF THE STATE ARCHITECT
105925
APPL 01
AC LE FLS ED SS AL
DATE: 5-12-04 JUL 26 2004

BLDG. ID: 098
ID CODE: 312098-109.01-A

DRAWN BY: JH
CHECKED BY: JA
JOB NO: 0307

SHEET A1.2

8/27/03 A01-02.DWG

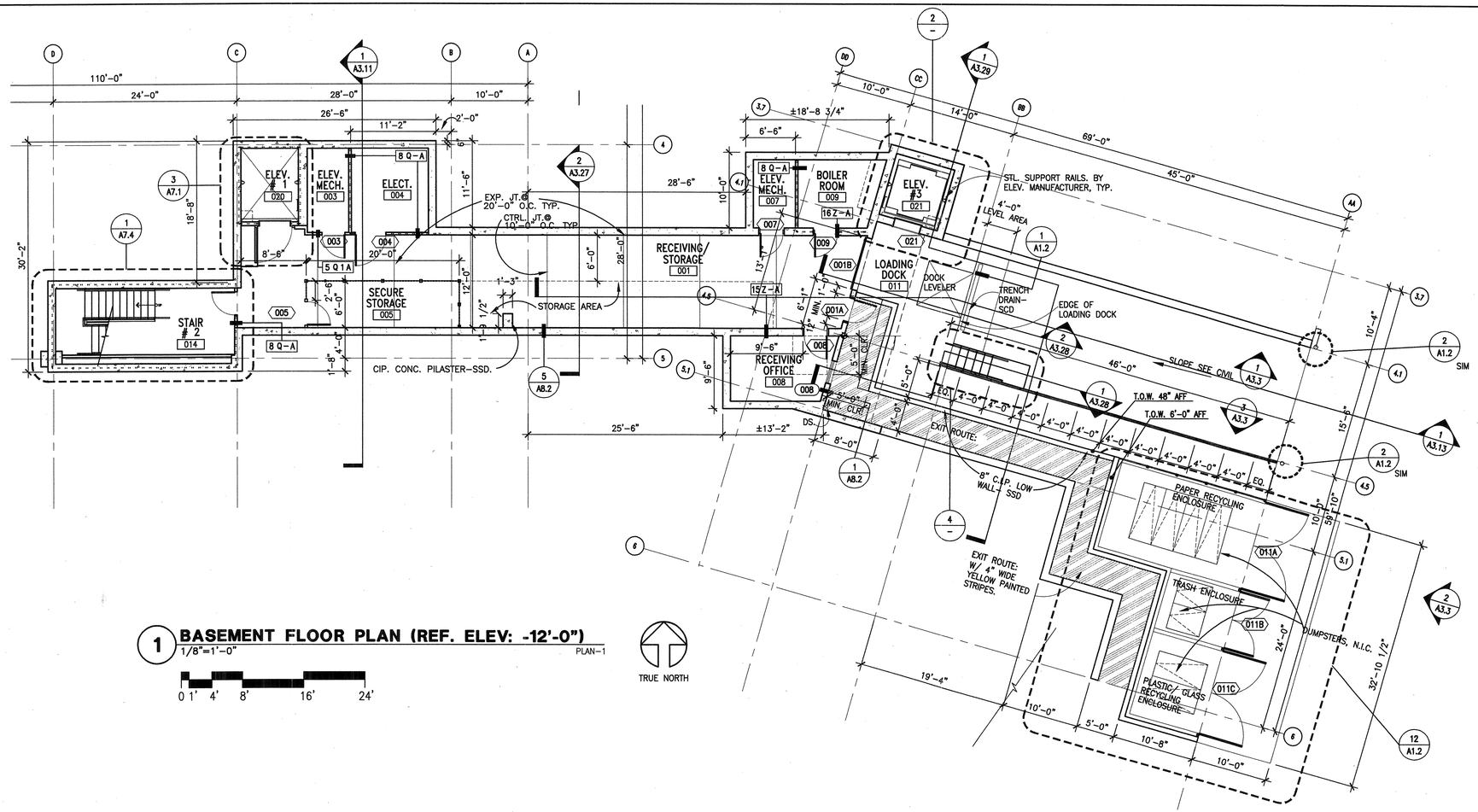

1 BASEMENT FLOOR PLAN (REF. ELEV: -12'-0")

1/8"=1'-0" PLAN-1

0 1' 4' 8' 16' 24'

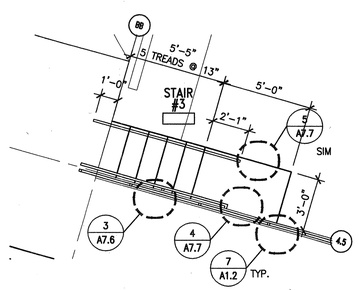

4 ENLARGED STAIR No. 3 PLAN

1/4"=1'-0" LDPLAN

0 1' 4' 8' 12'

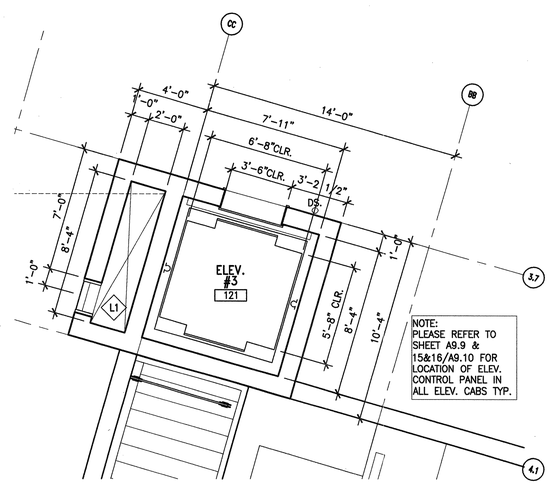

3 ENLARGED ELEV. 3 FIRST FLR. PLAN

1/4"=1'-0" LDPLAN

0 1' 4' 8' 12'

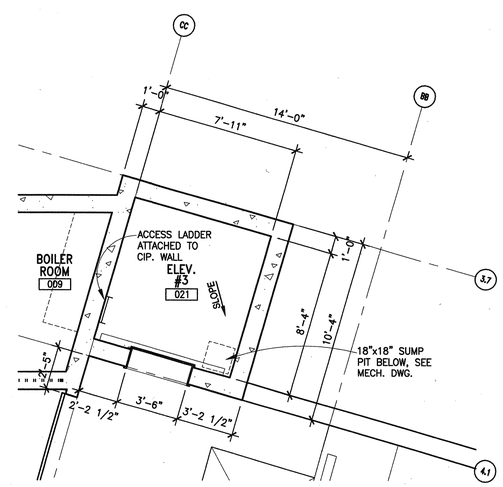

2 ENLARGED ELEV. 3 BASEMENT PLAN

1/4"=1'-0" LDPLAN

0 1' 4' 8' 12'

PLAN LEGEND

- UNIT / 100 — ROOM NAME / ROOM NUMBER
- INTERNATIONAL SYMBOL OF ACCESSIBILITY
- 1 A-H — PARTITION TYPES – SEE A9.1
- 100 — DOOR NUMBER – SEE SCHEDULE: A11.1
- 100 — WINDOW NUMBER – SEE SCHEDULE: A11.2/A11.3
- 100 — LOUVER NUMBER – SEE SCHEDULE: A11.3
- 100 — TOILET ACCESSORY SYMBOL –SEE SCHED.: A5.6
- 100 — EQUIPMENT SYMBOL –SEE SCHEDULE: A11.5
- CPT — FLOOR FINISH, SEE SCHEDULE A11.4, A11.5
- C.I.P. PARTITION – SSD
- 1 HR. RATED WALL ASSEMBLY – SEE 8/A9.1
- [] F.E.C. FIRE EXTINGUISHER CABINET, DIMENSIONED TO CENTERLINE REF. 4/A9.2
- ○ DS DOWN SPOUT FOR TYP. MOUNTING HEIGHT SEE 2/A3.20, 4/A8.3

GENERAL NOTES

1. ALL DIMENSIONS ARE FROM GRIDLINE, FACE OF FRAMING OR FACE OF CONC., U.O.N.
2. SEE SHEET A9.1 FOR PARTITION TYPES AND DETAILS.
3. SEE SHEET A11.1, A11.2 & A11.3 FOR DOOR AND WINDOW SCHEDULES.
4. SEE ENLARGED PLANS SHEETS A4.1 FOR ADDITIONAL DIMENSIONS, PARTITION TYPE SYMBOLS AND DOOR & WINDOW KEYS
5. SEE SHEETS A2.4 & A2.5 FOR FINISH PLAN
6. FOR STRUCTURAL STL. LOCATIONS & SIZES @ STAIR LANDINGS & STRINGERS –SSD. TYP.
7. SEE SHEET A5.6 & A11.5 FOR TOILET ACCESSORIES LIST & EQUIPMENT SCHEDULES.
8. SEE SHEET A8.1 FOR EXTERIOR WALL ASSEMBLY TYPES AND DETAILS.
9. REFER TO STRUCTURAL DRAWINGS FOR STEEL LOCATIONS AND SIZES AT LANDINGS AND STRINGERS

BSA Architects
A California Corporation
350 PACIFIC AVENUE
SAN FRANCISCO, CA 94111
415-781-1526

DIABLO VALLEY COLLEGE

DIABLO VALLEY COLLEGE NEW BOOKSTORE

321 GOLF CLUB RD.
PLEASANT HILL, CALIFORNIA

© 2003 BSA Architects
"All drawings and written material appearing herein constitute the original and unpublished work of the architect and the same may not be duplicated, used, or disclosed without the written consent of the architect."

DATE: 23 JULY, 2004

REVISIONS:

LICENSED ARCHITECT JOHN ASHWORTH No. C26747 REN. 1-31-05 STATE OF CALIFORNIA

BID SET

SHEET TITLE:

BASEMENT FLOOR & LOADING DOCK PLAN

IDENTIFICATION STAMP
DIVISION OF THE STATE ARCHITECT
105925
APPL 01
AC LE FLS ED SS A1
DATE: 5-12-04 JUL 2 0 2004

BLDG. ID: 098
ID CODE: 312098-109.01-A

DRAWN BY: GL/WC
CHECKED BY: JA
JOB NO: 0307

SHEET A2.0

8/22/03 DWG-03-02.DWG

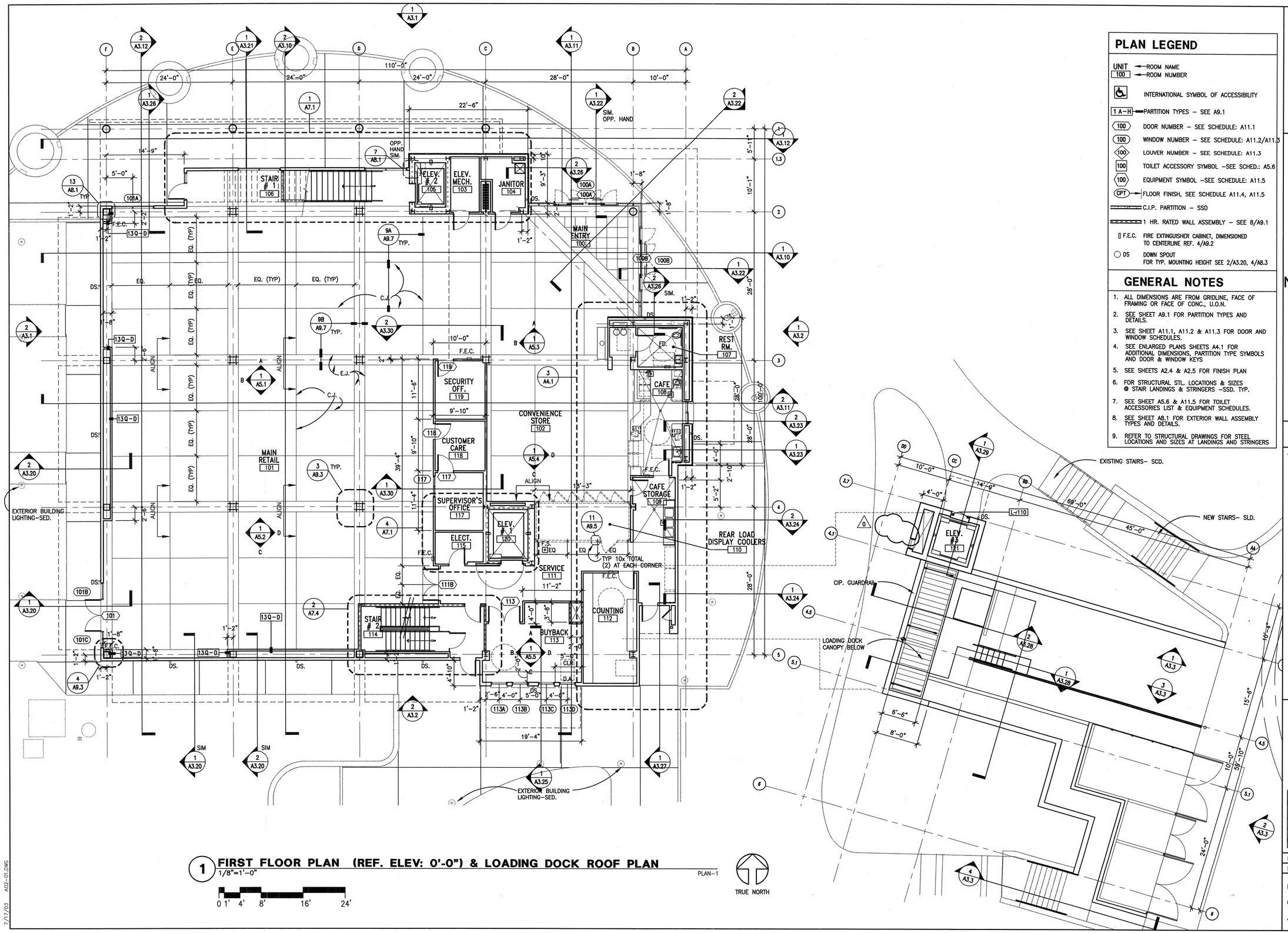

1 FIRST FLOOR PLAN (REF. ELEV: 0'-0") & LOADING DOCK ROOF PLAN
1/8"=1'-0"

0 1' 4' 8' 16' 24'

PLAN-1

TRUE NORTH

PLAN LEGEND

- UNIT / 100 — ROOM NAME / ROOM NUMBER
- INTERNATIONAL SYMBOL OF ACCESSIBILITY
- 1 A-H — PARTITION TYPES – SEE A9.1
- 100 — DOOR NUMBER – SEE SCHEDULE: A11.1
- 100 — WINDOW NUMBER – SEE SCHEDULE: A11.2/A11.3
- 100 — LOUVER NUMBER – SEE SCHEDULE: A11.3
- 100 — TOILET ACCESSORY SYMBOL –SEE SCHED.: A5.6
- 100 — EQUIPMENT SYMBOL –SEE SCHEDULE: A11.5
- CPT — FLOOR FINISH, SEE SCHEDULE A11.4, A11.5
- C.I.P. PARTITION – SSD
- 1 HR. RATED WALL ASSEMBLY – SEE 8/A9.1
- F.E.C. — FIRE EXTINGUISHER CABINET, DIMENSIONED TO CENTERLINE REF. 4/A9.2
- DS — DOWN SPOUT FOR TYP. MOUNTING HEIGHT SEE 2/A3.20, 4/A8.3

GENERAL NOTES

1. ALL DIMENSIONS ARE FROM GRIDLINE, FACE OF FRAMING OR FACE OF CONC., U.O.N.
2. SEE SHEET A9.1 FOR PARTITION TYPES AND DETAILS.
3. SEE SHEET A11.1, A11.2 & A11.3 FOR DOOR AND WINDOW SCHEDULES.
4. SEE ENLARGED PLANS SHEETS A4.1 FOR ADDITIONAL DIMENSIONS, PARTITION TYPE SYMBOLS AND DOOR & WINDOW KEYS
5. SEE SHEETS A2.4 & A2.5 FOR FINISH PLAN
6. FOR STRUCTURAL STL. LOCATIONS & SIZES @ STAIR LANDINGS & STRINGERS –SSD. TYP.
7. SEE SHEET A5.6 & A11.5 FOR TOILET ACCESSORIES LIST & EQUIPMENT SCHEDULES.
8. SEE SHEET A8.1 FOR EXTERIOR WALL ASSEMBLY TYPES AND DETAILS.
9. REFER TO STRUCTURAL DRAWINGS FOR STEEL LOCATIONS AND SIZES AT LANDINGS AND STRINGERS

BSA Architects
A California Corporation
350 PACIFIC AVENUE
SAN FRANCISCO, CA 94111
415-781-1526

DIABLO VALLEY COLLEGE

DIABLO VALLEY COLLEGE NEW BOOKSTORE

321 GOLF CLUB RD.
PLEASANT HILL, CALIFORNIA

© 2003 BSA Architects
"All drawings and written material appearing herein constitute the original and unpublished work of the architect and the same may not be duplicated, used, or disclosed without the written consent of the architect."

DATE: 23 JULY, 2004

REVISIONS:

LICENSED ARCHITECT JOHN ASHWORTH No. C26747 REN. 1-31-05 STATE OF CALIFORNIA

BID SET

SHEET TITLE:

FIRST FLOOR PLAN & LOADING DOCK ROOF PLAN

IDENTIFICATION STAMP
DIVISION OF THE STATE ARCHITECT
105925
APPL 01
AC LE FLS EO SS AL
DATE: 5-12-04 JUL 26 2004

BLDG. ID: 098
ID CODE: 312098-109.01-A

DRAWN BY: GL
CHECKED BY: JA
JOB NO: 0307

SHEET A2.1

7/17/03 A02-01.DWG

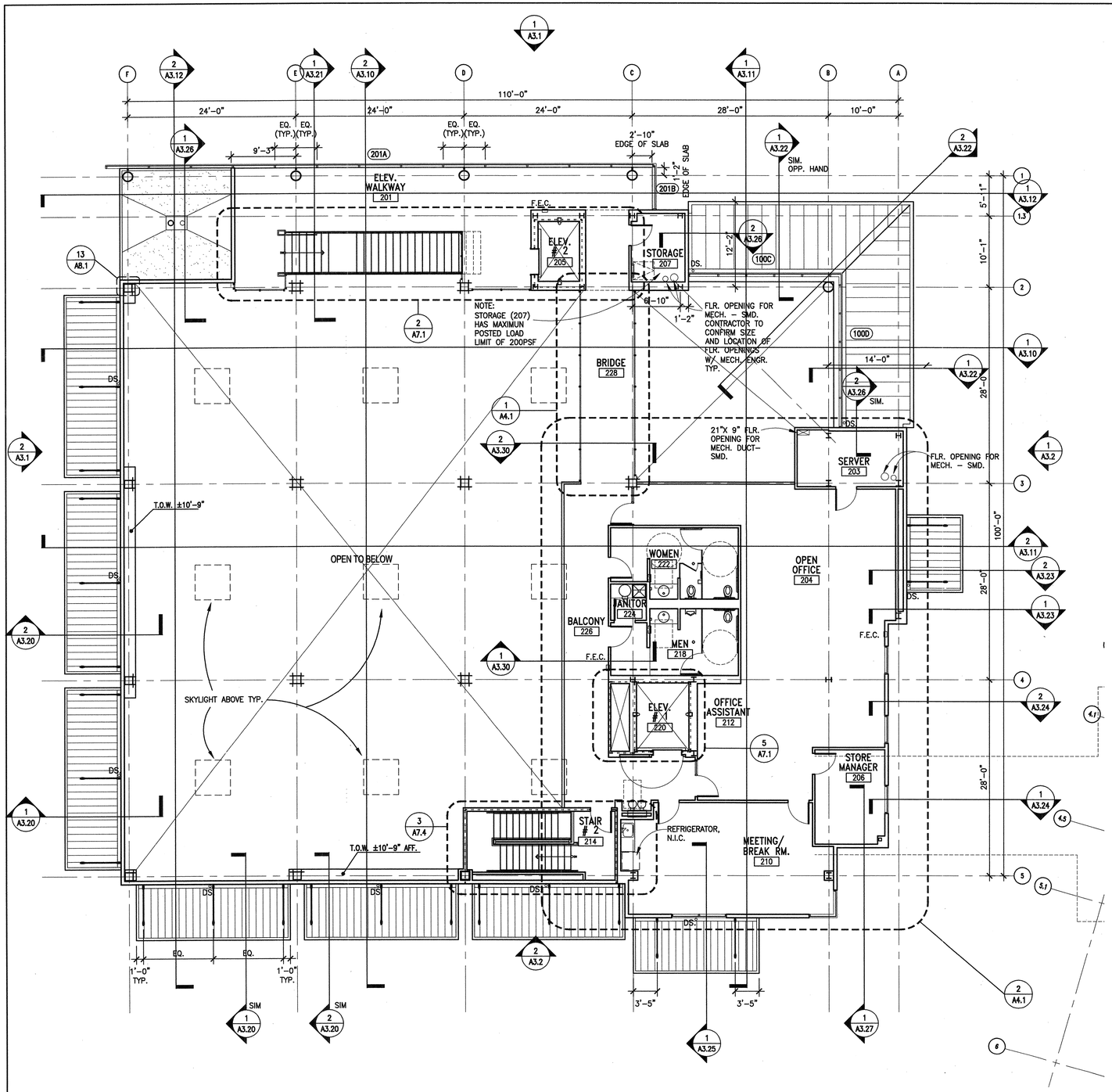

1 SECOND FLOOR PLAN (REF. ELEV: 13'-0")

1/8"=1'-0"

PLAN-2

0 1' 4' 8' 16' 24'

TRUE NORTH

PLAN LEGEND

UNIT / 100	ROOM NAME / ROOM NUMBER
♿	INTERNATIONAL SYMBOL OF ACCESSIBILITY
1 A–H	PARTITION TYPES – SEE A9.1
100	DOOR NUMBER – SEE SCHEDULE: A11.1
100	WINDOW NUMBER – SEE SCHEDULE: A11.2/A11.3
100	LOUVER NUMBER – SEE SCHEDULE: A11.3
100	TOILET ACCESSORY SYMBOL –SEE SCHED.: A5.6
100	EQUIPMENT SYMBOL –SEE SCHEDULE: A11.5
CPT	FLOOR FINISH, SEE SCHEDULE A11.4, A11.5
	C.I.P. PARTITION – SSD
	1 HR. RATED WALL ASSEMBLY – SEE 8/A9.1
F.E.C.	FIRE EXTINGUISHER CABINET, DIMENSIONED TO CENTERLINE REF. 4/A9.2
DS	DOWN SPOUT FOR TYP. MOUNTING HEIGHT SEE 2/A3.20, 4/A8.3

GENERAL NOTES

1. ALL DIMENSIONS ARE FROM GRIDLINE, FACE OF FRAMING OR FACE OF CONC., U.O.N.
2. SEE SHEET A9.1 FOR PARTITION TYPES AND DETAILS.
3. SEE SHEET A11.1, A11.2 & A11.3 FOR DOOR AND WINDOW SCHEDULES.
4. SEE ENLARGED PLANS SHEETS A4.1 FOR ADDITIONAL DIMENSIONS, PARTITION TYPE SYMBOLS AND DOOR & WINDOW KEYS
5. SEE SHEETS A2.4 & A2.5 FOR FINISH PLAN
6. FOR STRUCTURAL STL. LOCATIONS & SIZES @ STAIR LANDINGS & STRINGERS –SSD. TYP.
7. SEE SHEET A5.6 & A11.5 FOR TOILET ACCESSORIES LIST & EQUIPMENT SCHEDULES.
8. SEE SHEET A8.1 FOR EXTERIOR WALL ASSEMBLY TYPES AND DETAILS.
9. REFER TO STRUCTURAL DRAWINGS FOR STEEL LOCATIONS AND SIZES AT LANDINGS AND STRINGERS

BSA Architects
A California Corporation
350 PACIFIC AVENUE
SAN FRANCISCO, CA 94111
415–781–1526

DIABLO VALLEY COLLEGE

DIABLO VALLEY COLLEGE NEW BOOKSTORE

321 GOLF CLUB RD.
PLEASANT HILL, CALIFORNIA

© 2003 BSA Architects
"All drawings and written material appearing herein constitute the original and unpublished work of the architect and the same may not be duplicated, used, or disclosed without the written consent of the architect."

DATE: 23 JULY, 2004

REVISIONS:

LICENSED ARCHITECT JOHN ASHWORTH No. C26747 REN. 1-31-05 STATE OF CALIFORNIA

BID SET

SHEET TITLE:

SECOND FLOOR PLAN

IDENTIFICATION STAMP
DIVISION OF THE STATE ARCHITECT
105925
APPL 01
AC LE FLS EO SS A1
DATE: 5-12-04 JUL 26 2004

BLDG. ID: 098
ID CODE: 312098–109.01–A

DRAWN BY: GL
CHECKED BY: JA
JOB NO: 0307

SHEET A2.2

7/17/03 A02-02.DWG

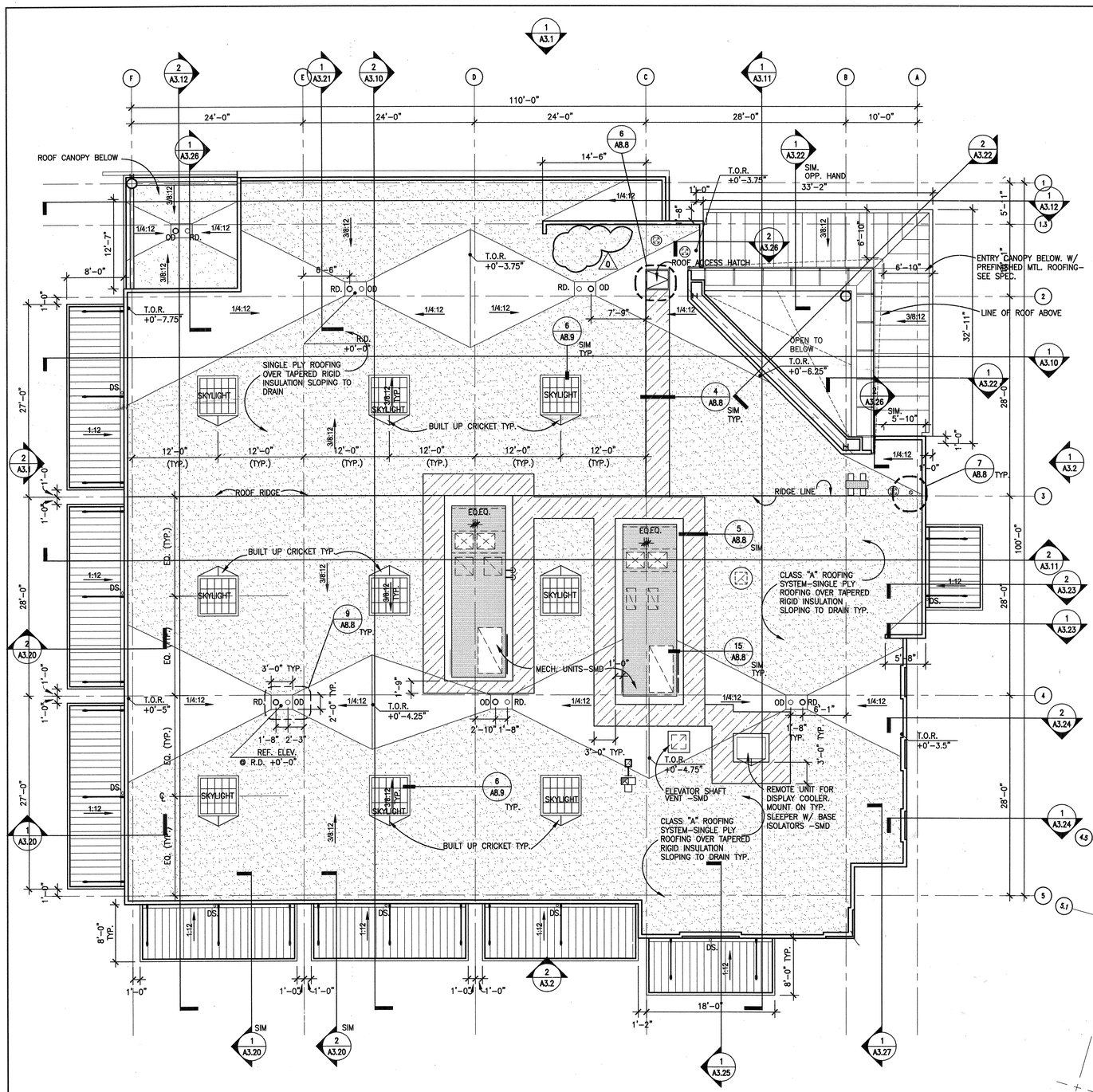

1 ROOF PLAN
1/8"=1'-0"
PLAN-R
0 1' 4' 8' 16' 24'

TRUE NORTH

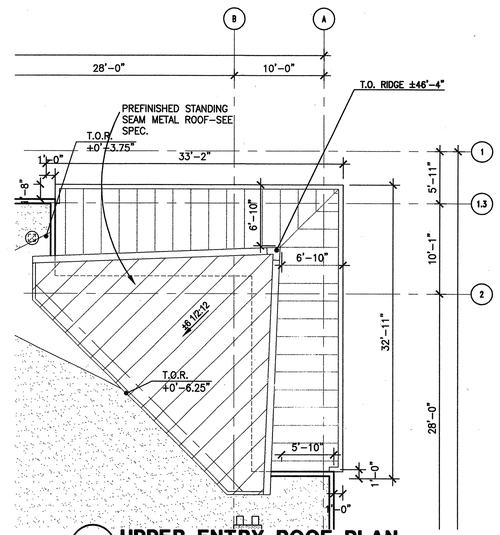

2 UPPER ENTRY ROOF PLAN
1/8"=1'-0"
PLAN-R
0 1' 4' 8' 16' 24'

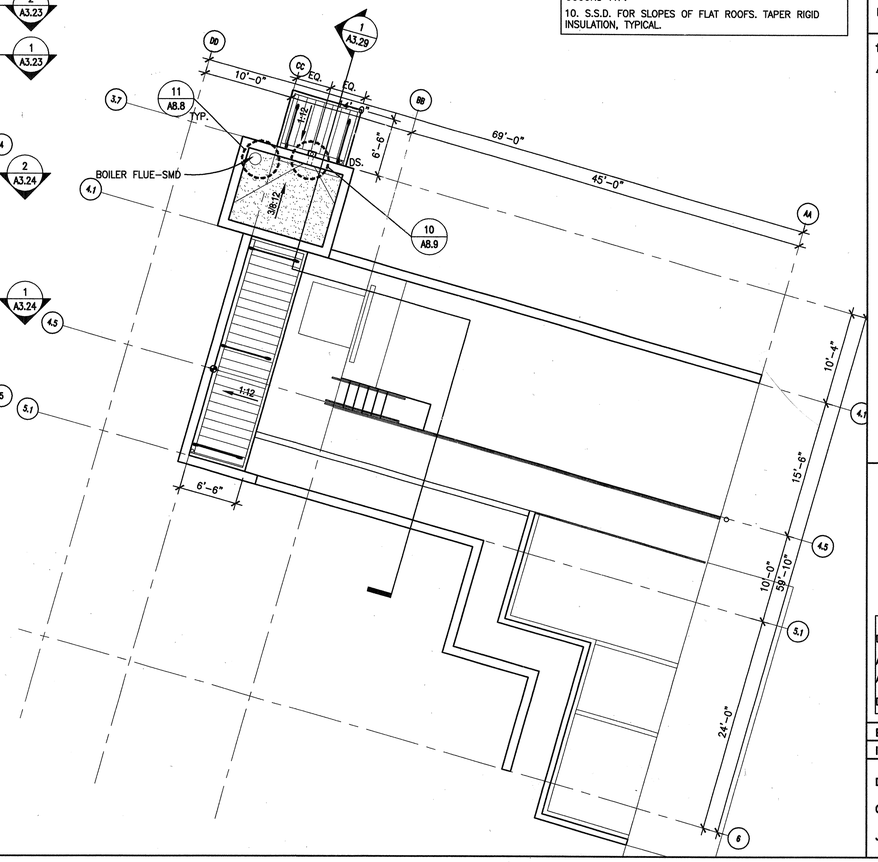

ROOF PLAN LEGEND

- 3/8:12 — ROOF SLOPE
- DS — DOWNSPOUT
- E.J. — EXPANSION JOINT
- RIDGE CAP-TYP. SEE DTL. 1/A8.9
- ROOF WALKWAY PAD -SEE DTL. 4/A8.8
- SINGLE PLY ROOF MEMBRANE
- PREFINISHED STANDING SEAM MTL. ROOF
- PREFINISHED CORRUGATED MTL. ROOF DECK
- PREFINISHED FLAT SEAM MTL. ROOF

ROOF PLAN NOTES

1. TERMINATE PREFINISHED RIDGE CAP ±12" FROM INTERSECTION & PROVIDE PREFINISHED END CAPS FOR RIDGE.
2. ROOF PENETRATIONS TO BE PAINTED TO MATCH ROOF. REFER TO MECH. PLUM. & ELEC. FOR FULL EXTENT OF ROOF PENETRATIONS.
3. ALL MECH., ELECTRICAL & PLUMBING RUNS ON ROOF TOP TO BE PLACED ON MECH. SLEEPERS TYP. FOR REFERENCE SEE DTL. 9/A8.9
4. SKYLIGHT OPENINGS TO BE CENTERED ON STRUCTURAL GRID TYP. U.O.N.
5. REFER TO SHEET A8.8 TO A8.9 FOR ROOF DETAILS.
6. REFER TO DETAIL 2/A8.3 FOR TYP. GUTTER PROFILE
7. UNLESS OTHERWISE NOTED , DOWNSPOUTS ARE 3" ROUND G.S.M.
8. SEE 7/A8.8, 9/A8.8 & 11/A8.8 FOR DETAIL OF PLUMBING VENT PENETRATION THROUGH ROOF.
9. ROOF PENETRATIONS IN STANDING SEAM MTL ROOFS TO BE CENTERED WITHIN STANDING SEAM ROOF PANS, WHERE OCCURS TYP.
10. S.S.D. FOR SLOPES OF FLAT ROOFS. TAPER RIGID INSULATION, TYPICAL.

BSA Architects
A California Corporation
350 PACIFIC AVENUE
SAN FRANCISCO, CA 94111
415-781-1526

DIABLO VALLEY COLLEGE

DIABLO VALLEY COLLEGE NEW BOOKSTORE

321 GOLF CLUB RD.
PLEASANT HILL, CALIFORNIA

© 2003 BSA Architects
"All drawings and written material appearing herein constitute the original and unpublished work of the architect and the same may not be duplicated, used, or disclosed without the written consent of the architect."

DATE: 23 JULY, 2004

REVISIONS:
0 REVISIONS- 23 JULY, 2004

LICENSED ARCHITECT JOHN ASHWORTH No. C26747 REN. 1-31-06 STATE OF CALIFORNIA

BID SET

SHEET TITLE:
ROOF PLAN

IDENTIFICATION STAMP
DIVISION OF THE STATE ARCHITECT
105925
APPL 01
AC LE FLS ED SS 41
DATE: 5-12-04 JUL 26 2004

BLDG. ID: 098
ID CODE: 312098-109.01-A

DRAWN BY: GL
CHECKED BY: JA
JOB NO: 0307

SHEET A2.3

7/25/03 A02-03.DWG

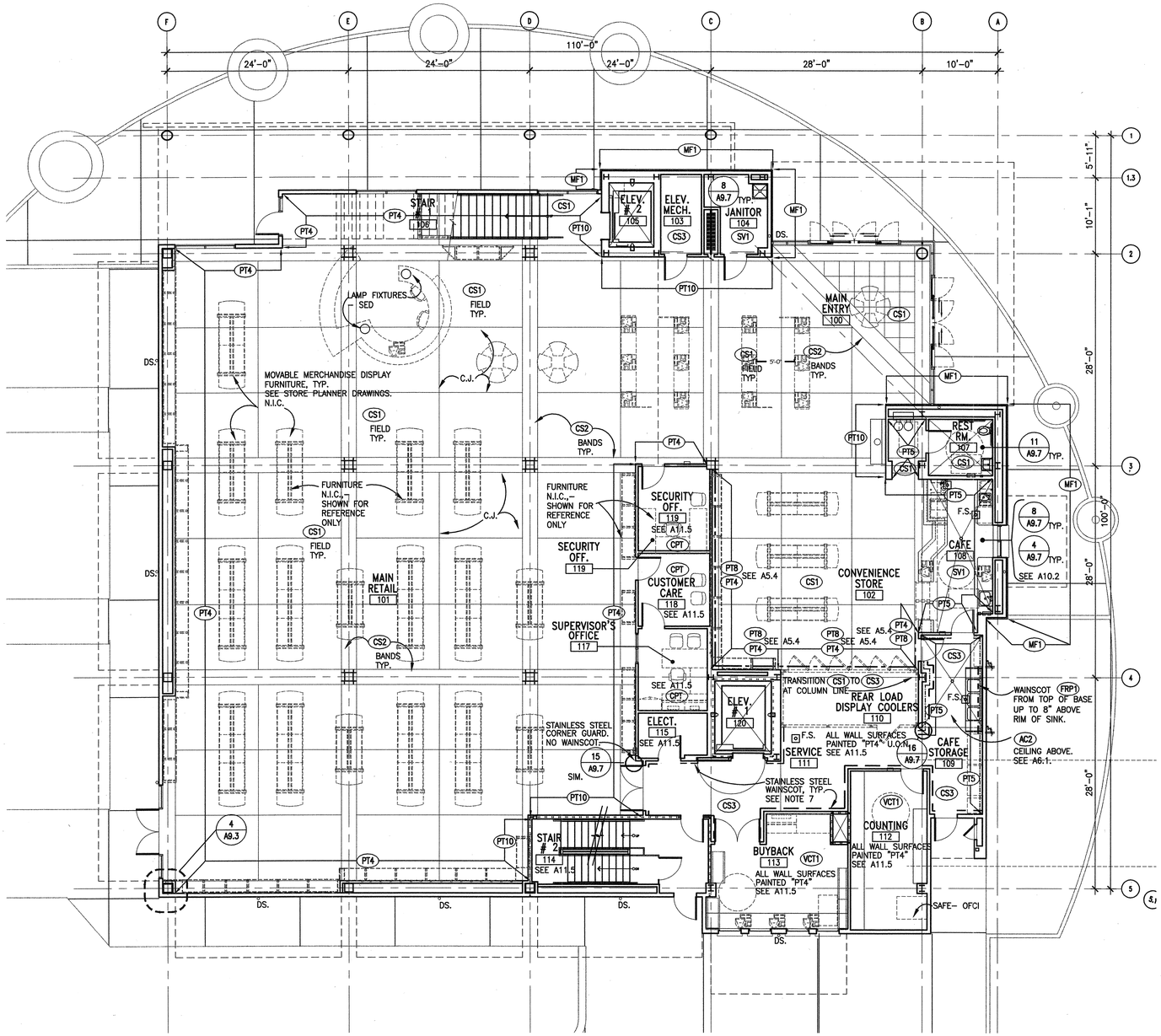

1 FIRST FLOOR FINISH PLAN

1/8"=1'-0"

PLAN-1

0 1' 4' 8' 16' 24'

PLAN NORTH

PLAN LEGEND

UNIT	ROOM NAME
100	ROOM NUMBER
	INTERNATIONAL SYMBOL OF ACCESSIBILITY
1 A–H	PARTITION TYPES – SEE A9.1
100	DOOR NUMBER – SEE SCHEDULE: A11.1
100	WINDOW NUMBER – SEE SCHEDULE: A11.2/A11.3
100	LOUVER NUMBER – SEE SCHEDULE: A11.3
100	TOILET ACCESSORY SYMBOL –SEE SCHED.: A5.6
100	EQUIPMENT SYMBOL –SEE SCHEDULE: A11.5
CPT	FLOOR FINISH, SEE SCHEDULE A11.4, A11.5
	C.I.P. PARTITION – SSD
	1 HR. RATED WALL ASSEMBLY – SEE 8/A9.1
F.E.C.	FIRE EXTINGUISHER CABINET, DIMENSIONED TO CENTERLINE REF. 4/A9.2
DS	DOWN SPOUT FOR TYP. MOUNTING HEIGHT SEE 2/A3.20, 4/A8.3

GENERAL NOTES

1. UNDERSIDE OF STRUCTURAL DECKING TO BE PAINTED "PT6", U.O.N. SEE REFLECTED CEILING PLANS ON A6.1 AND A6.2 FOR CEILING FINISHES
2. REFER TO SHEET A11.5 FOR ALL ROOM FINISHES NOT NOTED ON FINISH PLAN
3. SEE SHEET A11.1, A11.2 FOR DOOR AND WINDOW FINISHES.
4. SEE INTERIOR ELEVATIONS FOR FURTHER CLARIFICATION ON FINISHES.
5. ALL EXTERIOR STRUCTURAL STEEL BEAMS AND COLUMNS TO BE PAINTED "PT3" U.O.N. ALL INTERIOR STRUCTURAL BEAMS AND COLUMNS TO BE PAINTED "PT7" U.O.N.
6. VERTICAL POSTS AND MESH INFILL PANELS AT ALL RAILINGS TO BE PAINTED "PT7" U.O.N.
7. — — — — —INDICATES STAINLESS STEEL WAINSCOT TO 36" A.F.F. U.O.N SEE DWGS 10, 14 – 16/A9.7.
8. —— - —— - —INDICATES STEEL ANGLE DATUM AT 9'-0" A.F.F. SEE DETAIL 6/A9.5 AND INTERIOR ELEV.
9. —·—·—·—·—·—INDICATES CERAMIC TILE BASE SEE DETAIL 7/A9.7

BSA Architects
A California Corporation
350 PACIFIC AVENUE
SAN FRANCISCO, CA 94111
415–781–1526

DIABLO VALLEY COLLEGE

DIABLO VALLEY COLLEGE NEW BOOKSTORE

321 GOLF CLUB RD.
PLEASANT HILL, CALIFORNIA

© 2003 BSA Architects
"All drawings and written material appearing herein constitute the original and unpublished work of the architect and the same may not be duplicated, used, or disclosed without the written consent of the architect."

DATE: 23 JULY, 2004

REVISIONS:

LICENSED ARCHITECT JOHN ASHWORTH No. C26747 REN. 1-31-05 STATE OF CALIFORNIA

BID SET

SHEET TITLE:

FIRST FLOOR FINISH PLAN

IDENTIFICATION STAMP
DIVISION OF THE STATE ARCHITECT
105925
APPL 01
AC LE FLS SD SS A1
DATE: 5-12-04 JUL 26 2004

BLDG. ID: 098
ID CODE: 312098–109.01–A

DRAWN BY: JH
CHECKED BY: JA
JOB NO: 0307

SHEET A2.4

10/06/03 A02-04.DWG

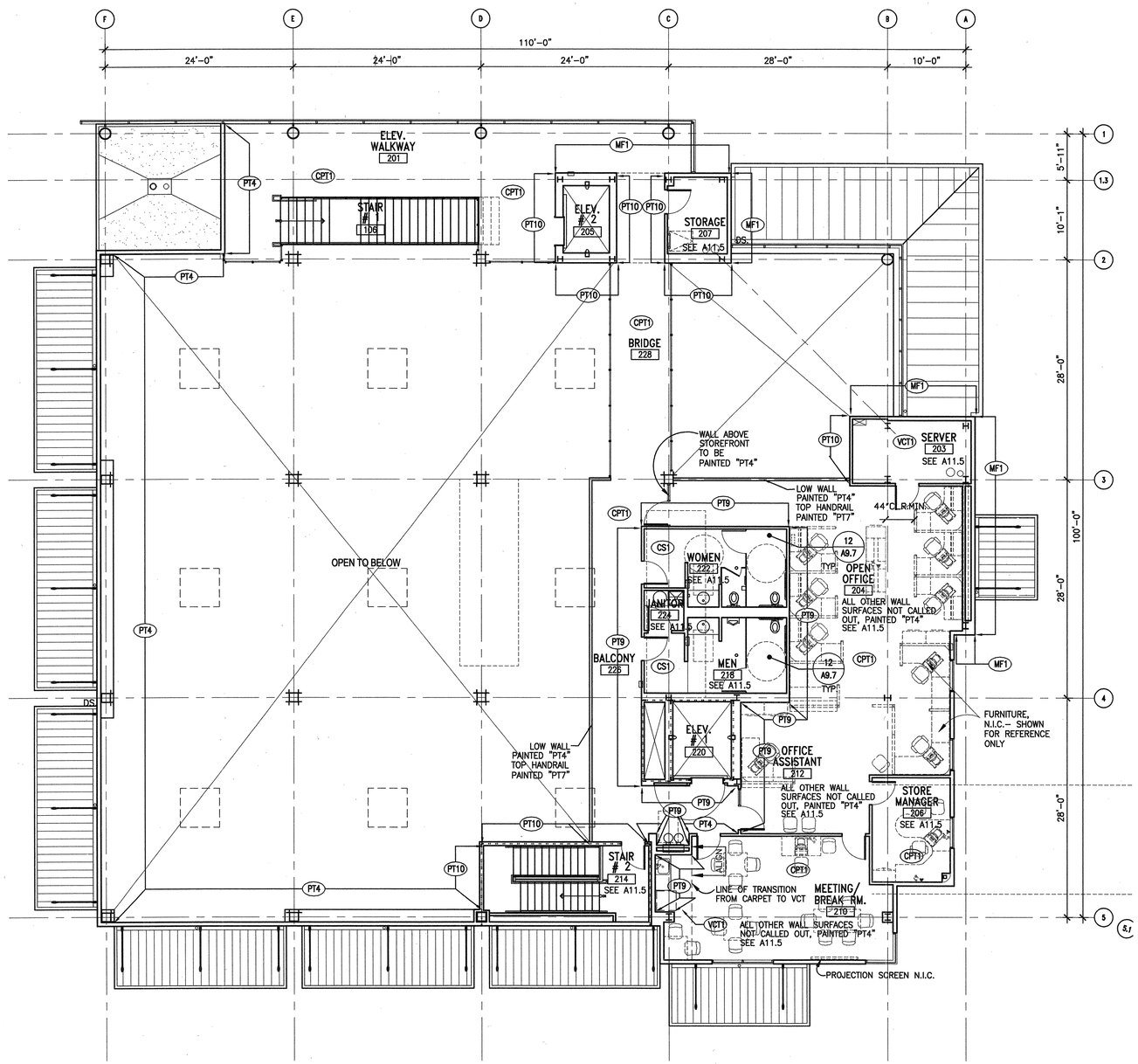

1 SECOND FLOOR FINISH PLAN

1/8"=1'-0"

PLAN-2

0 1' 4' 8' 16' 24'

PLAN NORTH

PLAN LEGEND

UNIT — ROOM NAME
100 — ROOM NUMBER

INTERNATIONAL SYMBOL OF ACCESSIBILITY

1 A–H — PARTITION TYPES – SEE A9.1

100 — DOOR NUMBER – SEE SCHEDULE: A11.1

100 — WINDOW NUMBER – SEE SCHEDULE: A11.2/A11.3

100 — LOUVER NUMBER – SEE SCHEDULE: A11.3

100 — TOILET ACCESSORY SYMBOL –SEE SCHED.: A5.6

100 — EQUIPMENT SYMBOL –SEE SCHEDULE: A11.5

CPT — FLOOR FINISH, SEE SCHEDULE A11.4, A11.5

C.I.P. PARTITION – SSD

1 HR. RATED WALL ASSEMBLY – SEE 8/A9.1

F.E.C. FIRE EXTINGUISHER CABINET, DIMENSIONED TO CENTERLINE REF. 4/A9.2

DS DOWN SPOUT FOR TYP. MOUNTING HEIGHT SEE 2/A3.20, 4/A8.3

GENERAL NOTES

1. UNDERSIDE OF STRUCTURAL DECKING TO BE PAINTED "PT6", U.O.N. SEE REFLECTED CEILING PLANS ON A6.1 AND A6.2 FOR CEILING FINISHES
2. REFER TO SHEET A11.5 FOR ALL ROOM FINISHES NOT NOTED ON FINISH PLAN
3. SEE SHEET A11.1, A11.2 FOR DOOR AND WINDOW FINISHES.
4. SEE INTERIOR ELEVATIONS FOR FURTHER CLARIFICATION ON FINISHES.
5. ALL EXTERIOR STRUCTURAL STEEL BEAMS AND COLUMNS TO BE PAINTED "PT3" U.O.N. ALL INTERIOR STRUCTURAL BEAMS AND COLUMNS TO BE PAINTED "PT7" U.O.N.
6. VERTICAL POSTS AND MESH INFILL PANELS AT ALL RAILINGS TO BE PAINTED "PT7" U.O.N.
7. — — — — —INDICATES STAINLESS STEEL WAINSCOT TO 36" A.F.F., U.O.N. SEE DWGS 10, 14 – 16/A9.7.
8. — - — - — —INDICATES STEEL ANGLE DATUM AT 9'-0" A.F.F. SEE DETAIL 6/A9.5 AND INTERIOR ELEV.
9. —·—·—·—·—INDICATES CERAMIC TILE BASE SEE DETAIL 7/A9.7

BSA Architects
A California Corporation
350 PACIFIC AVENUE
SAN FRANCISCO, CA 94111
415–781–1526

DIABLO VALLEY COLLEGE

DIABLO VALLEY COLLEGE NEW BOOKSTORE

321 GOLF CLUB RD.
PLEASANT HILL, CALIFORNIA

© 2003 BSA Architects
"All drawings and written material appearing herein constitute the original and unpublished work of the architect and the same may not be duplicated, used, or disclosed without the written consent of the architect."

DATE: 23 JULY, 2004

REVISIONS:

LICENSED ARCHITECT JOHN ASHWORTH No. C26747 REN. 1-31-05 STATE OF CALIFORNIA

BID SET

SHEET TITLE:

SECOND FLOOR FINISH PLAN

IDENTIFICATION STAMP
DIVISION OF THE STATE ARCHITECT
105925
APPL 01
AC LE FLS EO SS AI
DATE: 5-12-04 JUL 26 2004

BLDG. ID: 098
ID CODE: 312098–109.01–A

DRAWN BY: JH
CHECKED BY: JA
JOB NO: 0307

SHEET A2.5

7/17/03 A02-05.DWG

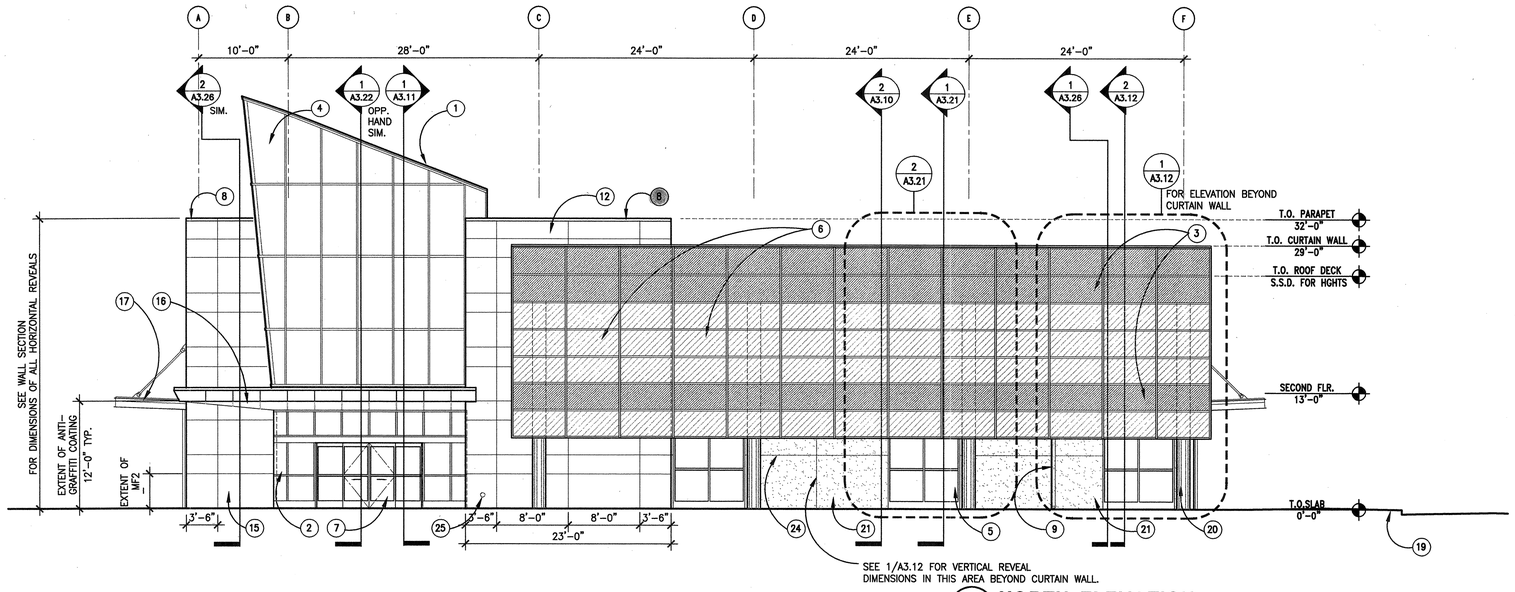

1 NORTH ELEVATION

1/8"=1'-0"

ELEV-1

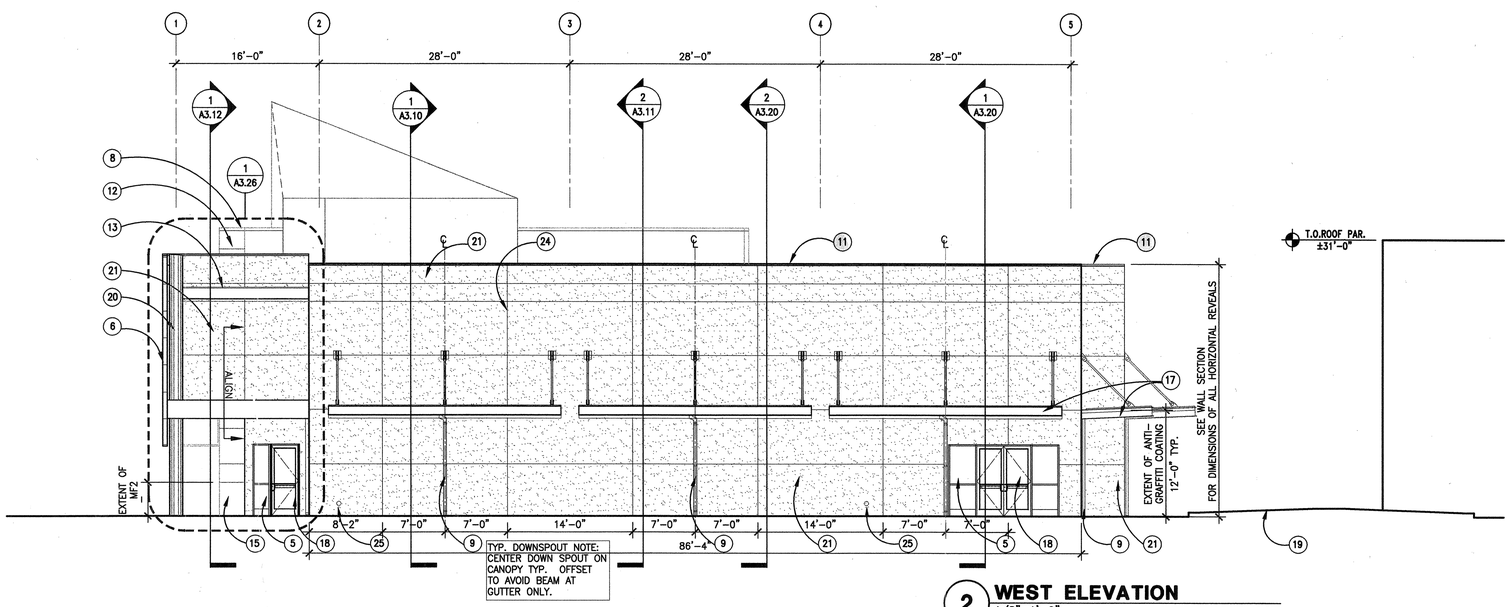

2 WEST ELEVATION

1/8"=1'-0"

ELEV-1

TYP. EXTERIOR MATERIALS LEGEND

1. PREFINISHED STANDING SEAM METAL ROOFING
2. PREFINISHED ALUMINUM STOREFRONT ENTRY, TYP. (FF1) W/ STANDARD GLAZING
3. CURTAIN WALL SYSTEM W/ CAPTURED 4 SIDES TYP. (FF2) W/ SPANDREL GLAZING
4. SLOPED CURTAIN WALL SYSTEM CAPTURED 4 SIDES TYP. W/ LOW-E GLAZING (FF1) (EXTERIOR) (FF2) (INTERIOR)
5. PREFINISHED ALUMINUM STOREFRONT WINDOWS, TYP. (FF2) W/ STANDARD GLAZING
6. CURTAIN WALL SYSTEM W/ CAPTURED 4 SIDES TYP. (FF2) W/ STANDARD GLAZING
7. AUTOMATIC GLASS SLIDING ENTRY DOORS–FINISH TO MATCH (FF1)
8. PREFINISHED METAL COPING (MF1)
9. PREFINISHED 3"ø DOWNSPOUT –SEE DTL 2/A8.3, 4/A8.3 (PT1)
10. PREFINISHED ALUMINUM STOREFRONT WINDOWS, TYP. (FF2) W/ SPANDREL GLAZING
11. METAL FLASHING (PT1)
12. EXTERIOR METAL PANEL CLADDING (MF1)
13. EXTERIOR STRUCTURAL STEEL BEAM–S.S.D. (PT3)
14. HOLLOW METAL DOOR & FRAME (PT2)
15. EXTERIOR ALUMINUM PLATE PANEL CLADDING (SEE NOTE 10) (MF2)
16. ENCLOSED ENTRY CANOPY (MF3)
17. STEEL FRAME CANOPY (PT2) (FF3)
18. ALUMN. STOREFRONT DOORS (FF2)
19. GRADE– SCD.
20. ROUND STRUCTURAL STEEL COLUMN–S.S.D. (PT3)
21. CEMENT PLASTER W/ ACRYLIC FINISH (ST1)
22. CAST IN PLACE CONCRETE WALL– SSD
24. CEMENT PLASTER CHANNEL SCREED REVEAL
25. OVERFLOW DRAIN DOWNSPOUT NOZZLE–S.P.D.(SEE DTL.5/A8.3)

SHEET NOTES

1. CONTROL JOINTS AND HORIZONTAL REVEALS TO MATCH AROUND ALL CORNERS.
2. SEE SHEET A11.4 FOR EXT. MATERIALS SCHEDULE
3. SEE SHEET A11.1 AND A11.2 FOR GLASS TYPES AND LOCATIONS.
4. SEE DIMENSIONS ON WALL SECTIONS FOR ALL HORIZONTAL REVEALS AND SCORING.
5. NOTE ALL DIMENSIONS FOR VERTICAL REVEALS AND SCORELINES ARE TO THE CENTERLINE OF REVEAL
6. SEE SHEET A3.12 FOR ALL OTHER VERTICAL REVEAL DIMENSIONS NOT NOTED ON ELEVATIONS.
7. HATCH DENOTES SPANDREL GLASS–SEE WINDOW TYPES AND SCHEDULE –A11.2, A11.3
8. GRAFFITI COATING TO BE APPLIED CONSISTENTLY AROUND PERIMETER OF BUILDING UP TO 12'–0" A.F.F. USE HORIZONTAL SCORING/ REVEALS AS DATUM. SEE SPECIFICATIONS
9. ALL DIMENSIONS IN ELEVATION ARE TO F.O.F. U.N.O.
10. AT ALL OCCURENCES OF METAL CLADDING ON BUILDING SKIN, ALUMINUM PLATE PANEL CLADDING (MF2) ONLY TO BE APPLIED AT FIRST ROW OF PANELS AT THE BASE OF BUILDING. ALL PANELS ABOVE DATUM LINE NOTED ON DRAWING, TO BE "MF1"

0 1' 4' 8' 16' 24'

BSA Architects
A California Corporation
350 PACIFIC AVENUE
SAN FRANCISCO, CA 94111
415–781–1526

DIABLO VALLEY COLLEGE

DIABLO VALLEY COLLEGE NEW BOOKSTORE

321 GOLF CLUB RD.
PLEASANT HILL, CALIFORNIA

© 2003 BSA Architects
"All drawings and written material appearing herein constitute the original and unpublished work of the architect and the same may not be duplicated, used, or disclosed without the written consent of the architect."

DATE: 23 JULY, 2004

REVISIONS:

LICENSED ARCHITECT JOHN ASHWORTH No. C26747 REN. 1-31-05 STATE OF CALIFORNIA

BID SET

SHEET TITLE:

EXTERIOR ELEVATIONS

IDENTIFICATION STAMP
DIVISION OF THE STATE ARCHITECT
APPL 01 105925
AC VE FLS ED SS AI
DATE: 5-12-04 JUL 26 2004

BLDG. ID: 098
ID CODE: 312098–109.01–A

DRAWN BY: GL
CHECKED BY: JA
JOB NO: 0307

SHEET A3.1

7/22/03 A03-01.DWG

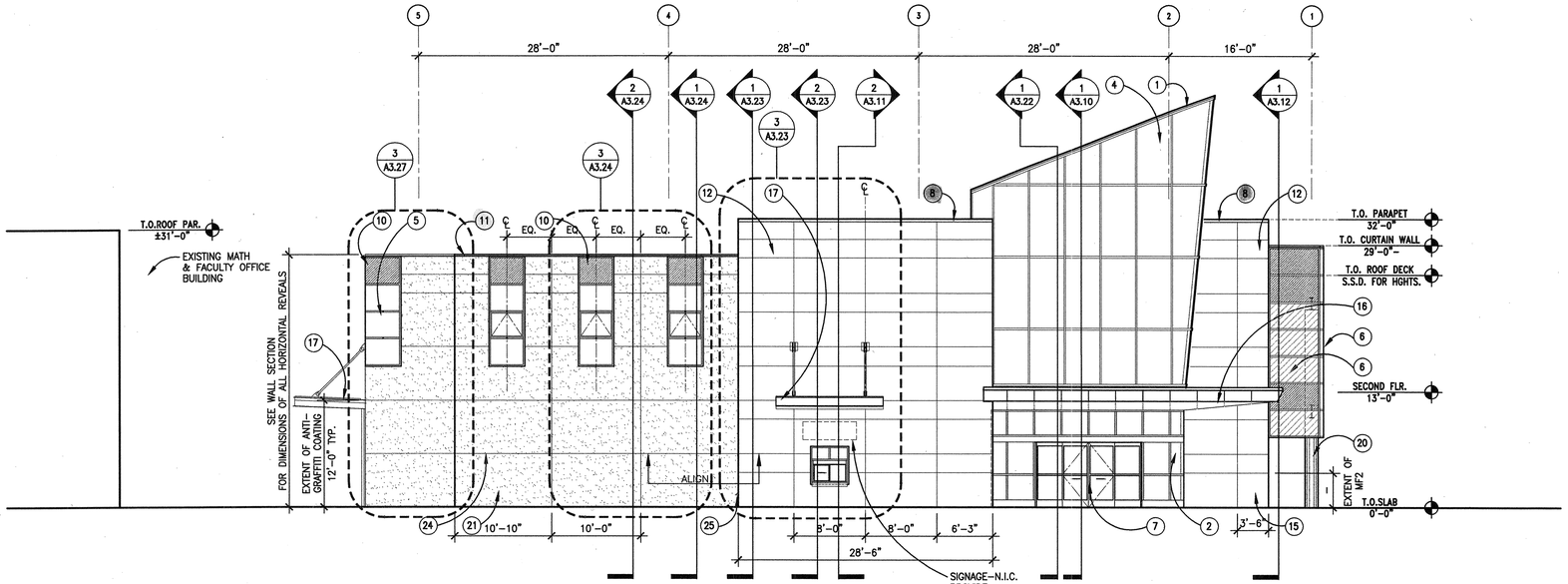

1 EAST ELEVATION

1/8"=1'-0"

ELEV-1

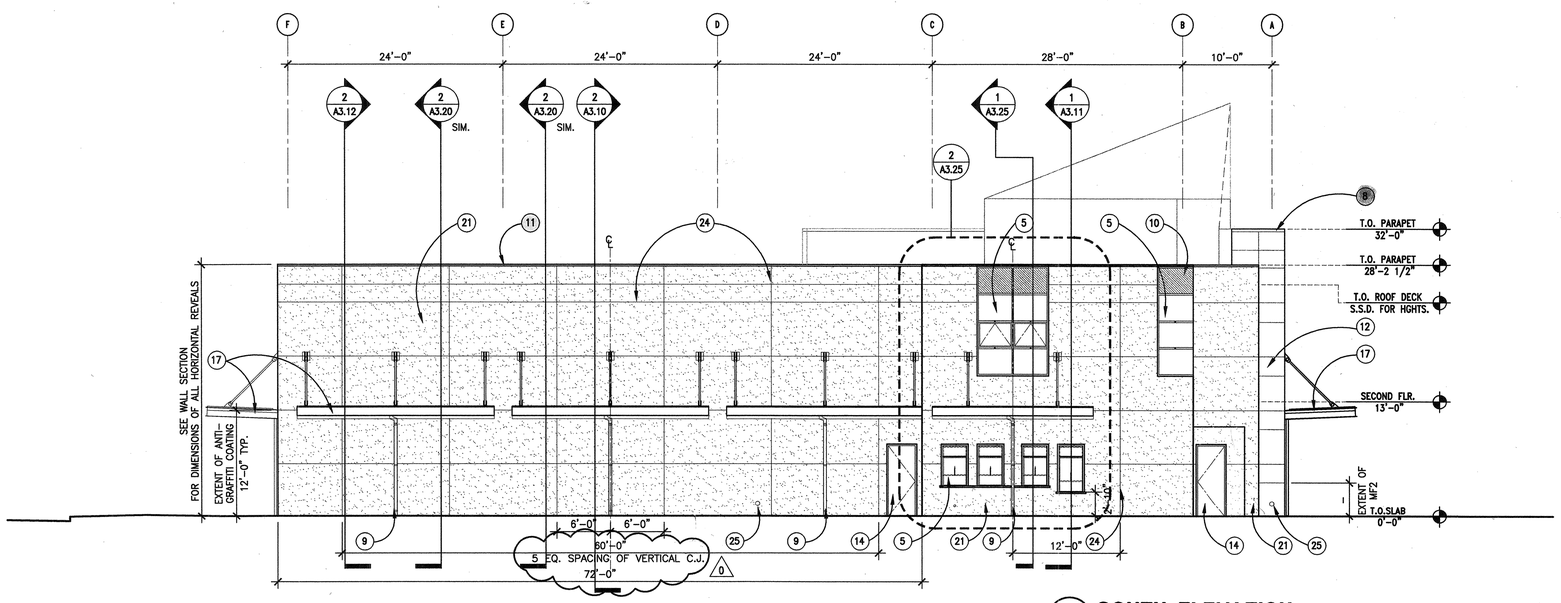

2 SOUTH ELEVATION

1/8"=1'-0"

ELEV-1

TYP. EXTERIOR MATERIALS LEGEND

1. PREFINISHED STANDING SEAM METAL ROOFING
2. PREFINISHED ALUMINUM STOREFRONT ENTRY, TYP. (FF1) W/ STANDARD GLAZING
3. CURTAIN WALL SYSTEM W/ CAPTURED 4 SIDES TYP. (FF2) W/ SPANDREL GLAZING
4. SLOPED CURTAIN WALL SYSTEM CAPTURED 4 SIDES TYP. W/ LOW-E GLAZING (FF1) (EXTERIOR) (FF2) (INTERIOR)
5. PREFINISHED ALUMINUM STOREFRONT WINDOWS, TYP. (FF2) W/ STANDARD GLAZING
6. CURTAIN WALL SYSTEM W/ CAPTURED 4 SIDES TYP. (FF2) W/ STANDARD GLAZING
7. AUTOMATIC GLASS SLIDING ENTRY DOORS-FINISH TO MATCH (FF1)
8. PREFINISHED METAL COPING (MF1)
9. PREFINISHED 3"ø DOWNSPOUT -SEE DTL 2/A8.3, 4/A8.3 (PT1)
10. PREFINISHED ALUMINUM STOREFRONT WINDOWS, TYP. (FF2) W/ SPANDREL GLAZING
11. METAL FLASHING (PT1)
12. EXTERIOR METAL PANEL CLADDING (MF1)
13. EXTERIOR STRUCTURAL STEEL BEAM-S.S.D. (PT3)
14. HOLLOW METAL DOOR & FRAME (PT2)
15. EXTERIOR ALUMINUM PLATE PANEL CLADDING (SEE NOTE 10) (MF2)
16. ENCLOSED ENTRY CANOPY (MF3)
17. STEEL FRAME CANOPY (PT2) (FF3)
18. ALUMN. STOREFRONT DOORS (FF2)
19. GRADE- SCD.
20. ROUND STRUCTURAL STEEL COLUMN-S.S.D. (PT3)
21. CEMENT PLASTER W/ ACRYLIC FINISH (ST1)
22. CAST IN PLACE CONCRETE WALL- SSD
24. CEMENT PLASTER CHANNEL SCREED REVEAL
25. OVERFLOW DRAIN DOWNSPOUT NOZZLE-S.P.D.(SEE DTL.5/A8.3)

SHEET NOTES

1. CONTROL JOINTS AND HORIZONTAL REVEALS TO MATCH AROUND ALL CORNERS.
2. SEE SHEET A11.4 FOR EXT. MATERIALS SCHEDULE
3. SEE SHEET A11.1 AND A11.2 FOR GLASS TYPES AND LOCATIONS.
4. SEE DIMENSIONS ON WALL SECTIONS FOR ALL HORIZONTAL REVEALS AND SCORING.
5. NOTE ALL DIMENSIONS FOR VERTICAL REVEALS AND SCORELINES ARE TO THE CENTERLINE OF REVEAL
6. SEE SHEET A3.12 FOR ALL OTHER VERTICAL REVEAL DIMENSIONS NOT NOTED ON ELEVATIONS.
7. HATCH DENOTES SPANDREL GLASS-SEE WINDOW TYPES AND SCHEDULE -A11.2, A11.3
8. GRAFFITI COATING TO BE APPLIED CONSISTENTLY AROUND PERIMETER OF BUILDING UP TO 12'-0" A.F.F. USE HORIZONTAL SCORING/ REVEALS AS DATUM. SEE SPECIFICATIONS
9. ALL DIMENSIONS IN ELEVATION ARE TO F.O.F. U.N.O.
10. AT ALL OCCURENCES OF METAL CLADDING ON BUILDING SKIN, ALUMINUM PLATE PANEL CLADDING (MF2) ONLY TO BE APPLIED AT FIRST ROW OF PANELS AT THE BASE OF BUILDING. ALL PANELS ABOVE DATUM LINE NOTED ON DRAWING, TO BE "MF1"

0 1' 4' 8' 16' 24'

BSA Architects
A California Corporation
350 PACIFIC AVENUE
SAN FRANCISCO, CA 94111
415-781-1526

DIABLO VALLEY COLLEGE

DIABLO VALLEY COLLEGE NEW BOOKSTORE

321 GOLF CLUB RD.
PLEASANT HILL, CALIFORNIA

© 2003 BSA Architects
"All drawings and written material appearing herein constitute the original and unpublished work of the architect and the same may not be duplicated, used, or disclosed without the written consent of the architect."

DATE: 23 JULY, 2004

REVISIONS:
0 REVISIONS- 23 JULY, 2004

LICENSED ARCHITECT JOHN ASHWORTH No. C26747 REN. 1-31-05 STATE OF CALIFORNIA

BID SET

SHEET TITLE:
EXTERIOR ELEVATIONS

IDENTIFICATION STAMP
DIVISION OF THE STATE ARCHITECT
105925
APPL 01
AC LE FLS EO SS 41
DATE: 5-12-04 JUL 26 2004

BLDG. ID: 098
ID CODE: 312098-109.01-A

DRAWN BY: GL
CHECKED BY: JA
JOB NO: 0307

SHEET A3.2

7/22/03 A03-02.DWG

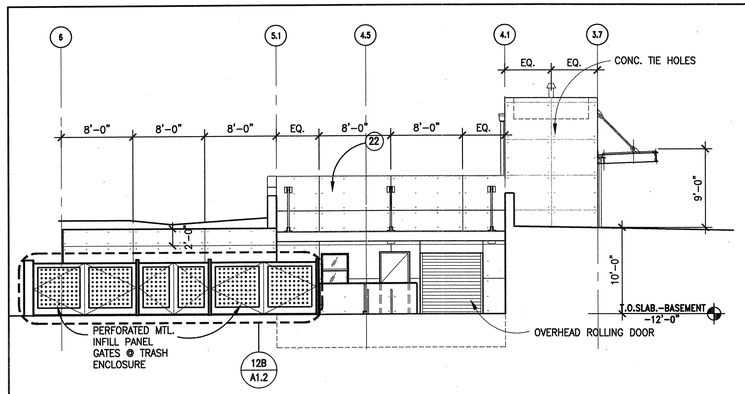

2 WEST ELEVATION
1/8"=1'-0" LDELEV

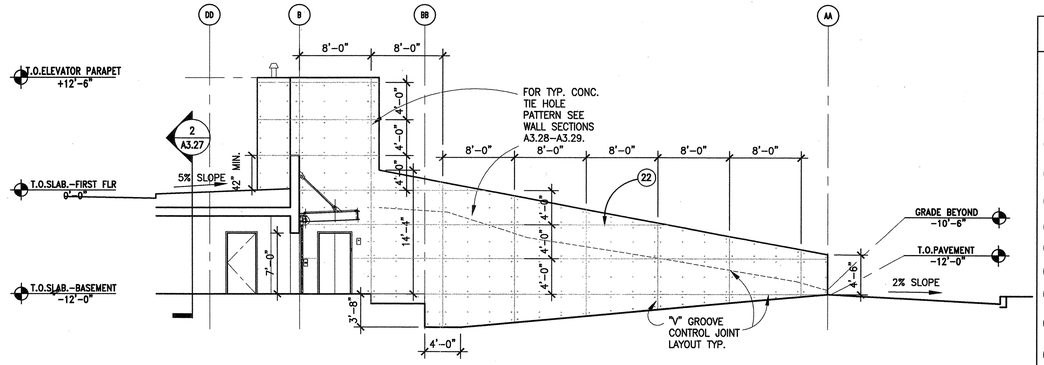

1 NORTH ELEVATION @ DOCK RAMP
1/8"=1'-0" LDELEV

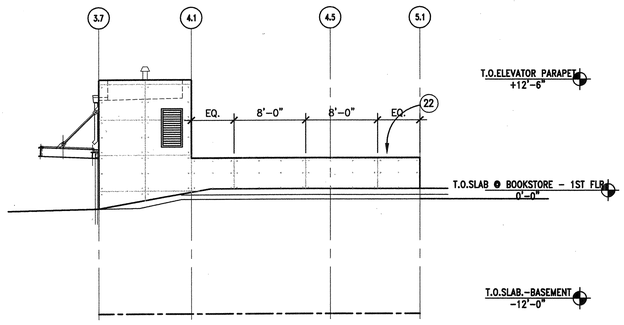

4 EAST ELEVATION
1/8"=1'-0" LDELEV

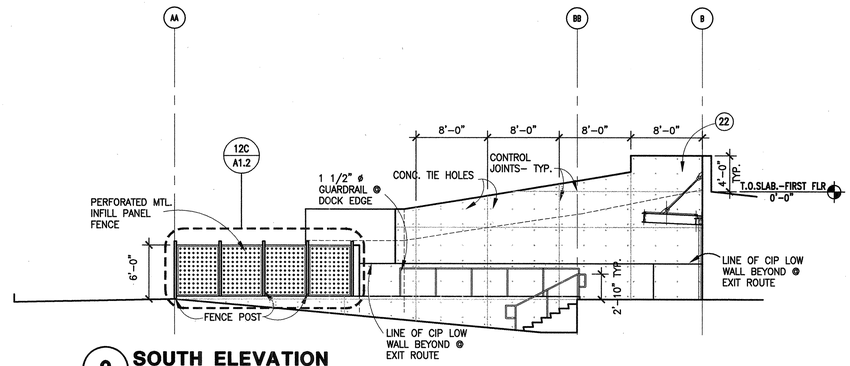

3 SOUTH ELEVATION
1/8"=1'-0" LDELEV

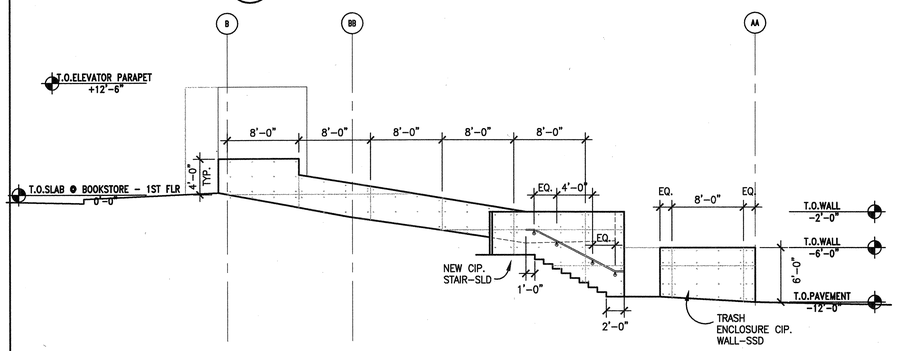

6 NORTH ELEVATION
1/8"=1'-0" LDELEV

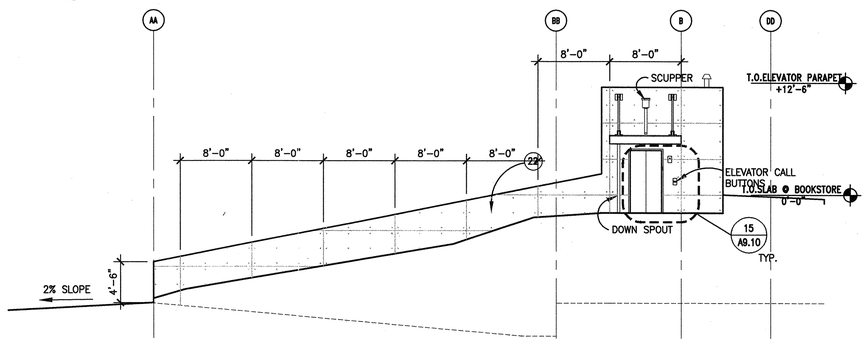

5 SOUTH ELEVATION @ ELEVATOR
1/8"=1'-0" LDELEV

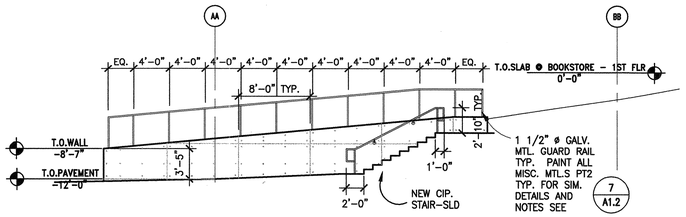

7 SOUTH ELEVATION @ LOWER STAIR
1/8"=1'-0" LDELEV

0 1' 4' 8' 16' 24'

TYP. EXTERIOR MATERIALS LEGEND

1. PREFINISHED STANDING SEAM METAL ROOFING
2. PREFINISHED ALUMINUM STOREFRONT ENTRY, TYP. (FF1) W/ STANDARD GLAZING
3. CURTAIN WALL SYSTEM W/ CAPTURED 4 SIDES TYP. (FF2) W/ SPANDREL GLAZING
4. SLOPED CURTAIN WALL SYSTEM CAPTURED 4 SIDES TYP. W/ LOW-E GLAZING (FF1) (EXTERIOR) (FF2) (INTERIOR)
5. PREFINISHED ALUMINUM STOREFRONT WINDOWS, TYP. (FF2) W/ STANDARD GLAZING
6. CURTAIN WALL SYSTEM W/ CAPTURED 4 SIDES TYP. (FF2) W/ STANDARD GLAZING
7. AUTOMATIC GLASS SLIDING ENTRY DOORS-FINISH TO MATCH (FF1)
8. PREFINISHED METAL COPING (MF1)
9. PREFINISHED 3"ø DOWNSPOUT -SEE DTL 2/A8.3, 4/A8.3 (PT1)
10. PREFINISHED ALUMINUM STOREFRONT WINDOWS, TYP. (FF2) W/ SPANDREL GLAZING
11. METAL FLASHING (PT1)
12. EXTERIOR METAL PANEL CLADDING (MF1)
13. EXTERIOR STRUCTURAL STEEL BEAM-S.S.D. (PT3)
14. HOLLOW METAL DOOR & FRAME (PT2)
15. EXTERIOR ALUMINUM PLATE PANEL CLADDING (SEE NOTE 10) (MF2)
16. ENCLOSED ENTRY CANOPY (MF3)
17. STEEL FRAME CANOPY (PT2) (FF3)
18. ALUMN. STOREFRONT DOORS (FF2)
19. GRADE- SCD.
20. ROUND STRUCTURAL STEEL COLUMN-S.S.D. (PT3)
21. CEMENT PLASTER W/ ACRYLIC FINISH (ST1)
22. CAST IN PLACE CONCRETE WALL- SSD
24. CEMENT PLASTER CHANNEL SCREED REVEAL
25. OVERFLOW DRAIN DOWNSPOUT NOZZLE-S.P.D.(SEE DTL.5/A8.3)

SHEET NOTES

1. CONTROL JOINTS AND HORIZONTAL REVEALS TO MATCH AROUND ALL CORNERS.
2. SEE SHEET A11.4 FOR EXT. MATERIALS SCHEDULE
3. SEE SHEET A11.1 AND A11.2 FOR GLASS TYPES AND LOCATIONS.
4. SEE DIMENSIONS ON WALL SECTIONS FOR ALL HORIZONTAL REVEALS AND SCORING.
5. NOTE ALL DIMENSIONS FOR VERTICAL REVEALS AND SCORELINES ARE TO THE CENTERLINE OF REVEAL
6. SEE SHEET A3.12 FOR ALL OTHER VERTICAL REVEAL DIMENSIONS NOT NOTED ON ELEVATIONS.
7. HATCH DENOTES SPANDREL GLASS-SEE WINDOW TYPES AND SCHEDULE -A11.2, A11.3
8. GRAFFITI COATING TO BE APPLIED CONSISTENTLY AROUND PERIMETER OF BUILDING UP TO 12'-0" A.F.F. USE HORIZONTAL SCORING/ REVEALS AS DATUM. SEE SPECIFICATIONS
9. ALL DIMENSIONS IN ELEVATION ARE TO F.O.F. U.N.O.
10. AT ALL OCCURENCES OF METAL CLADDING ON BUILDING SKIN, ALUMINUM PLATE PANEL CLADDING (MF2) ONLY TO BE APPLIED AT FIRST ROW OF PANELS AT THE BASE OF BUILDING. ALL PANELS ABOVE DATUM LINE NOTED ON DRAWING, TO BE "MF1"

BSA Architects
A California Corporation
350 PACIFIC AVENUE
SAN FRANCISCO, CA 94111
415-781-1526

DIABLO VALLEY COLLEGE

DIABLO VALLEY COLLEGE NEW BOOKSTORE

321 GOLF CLUB RD.
PLEASANT HILL, CALIFORNIA

© 2003 BSA Architects
"All drawings and written material appearing herein constitute the original and unpublished work of the architect and the same may not be duplicated, used, or disclosed without the written consent of the architect."

DATE: 23 JULY, 2004

REVISIONS:

LICENSED ARCHITECT JOHN ASHWORTH No. C26747 REN. 1-31-05 STATE OF CALIFORNIA

BID SET

SHEET TITLE:

EXTERIOR ELEVATIONS

IDENTIFICATION STAMP
DIVISION OF THE STATE ARCHITECT
105925
APPL 01
AC LE FLS EO SS A1
DATE: 5-12-04 JUL 26 2004

BLDG. ID: 098
ID CODE: 312098-109.01-A

DRAWN BY: WC
CHECKED BY: JA
JOB NO: 0307

SHEET A3.3

8/22/03 A03-02.DWG

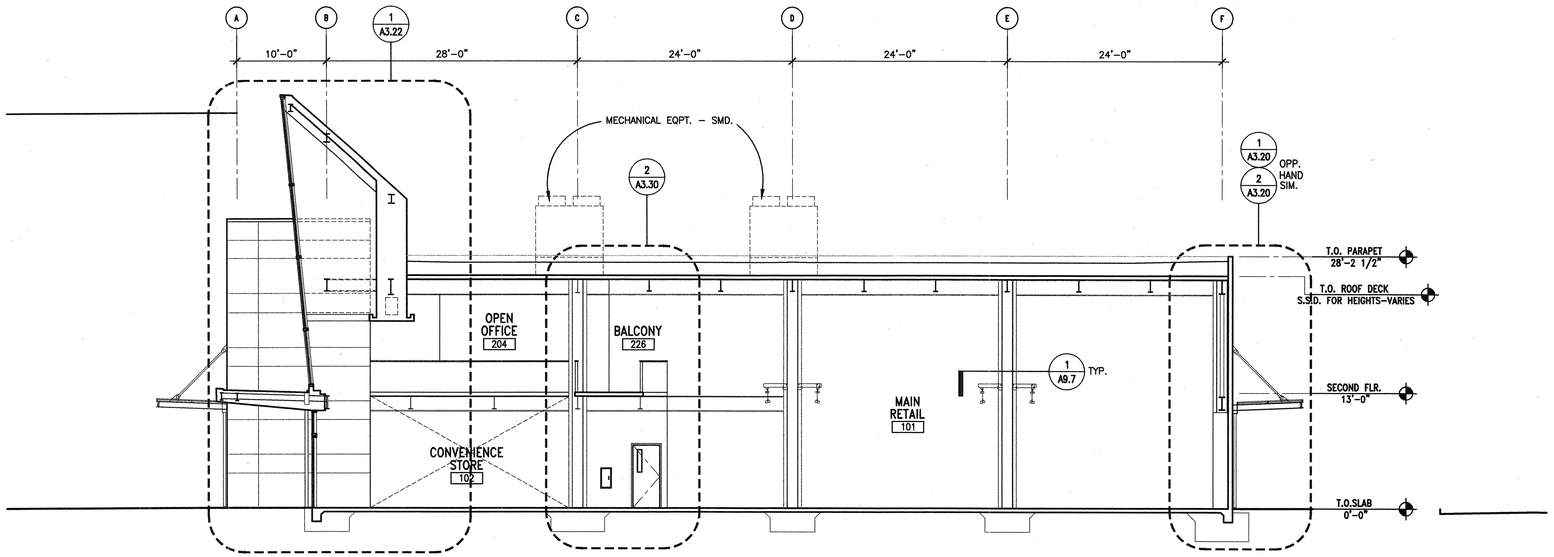

1 SECTION THROUGH ENTRY (EAST -WEST)

1/8"=1'-0"

BSECT-1

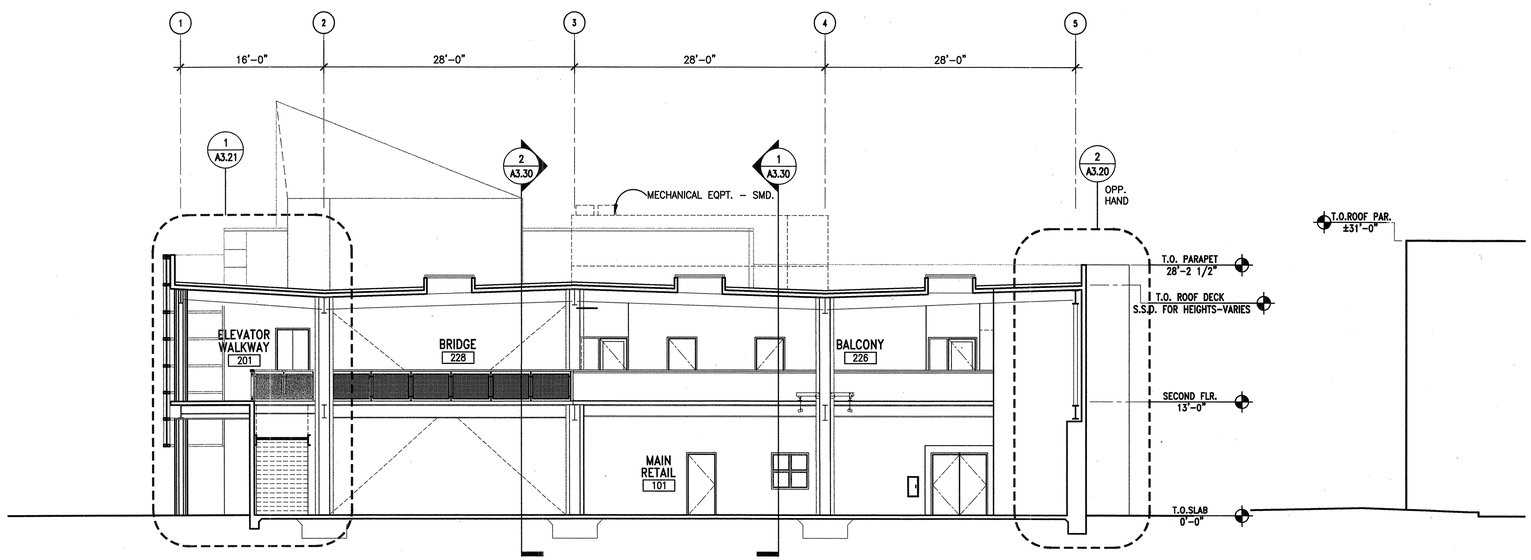

2 SECTION THROUGH RETAIL (NORTH-SOUTH)

1/8"=1'-0"

BSECT-1

0 1' 4' 8' 16' 24'

TYP. EXTERIOR MATERIALS LEGEND

1. PREFINISHED STANDING SEAM METAL ROOFING
2. PREFINISHED ALUMINUM STOREFRONT ENTRY, TYP. (FF1) W/ STANDARD GLAZING
3. CURTAIN WALL SYSTEM W/ CAPTURED 4 SIDES TYP. (FF2) W/ SPANDREL GLAZING
4. SLOPED CURTAIN WALL SYSTEM CAPTURED (FF1) (EXTERIOR) 4 SIDES TYP. W/ LOW-E GLAZING (FF2) (INTERIOR)
5. PREFINISHED ALUMINUM STOREFRONT WINDOWS, TYP. (FF2) W/ STANDARD GLAZING
6. CURTAIN WALL SYSTEM W/ CAPTURED 4 SIDES TYP. (FF2) W/ STANDARD GLAZING
7. AUTOMATIC GLASS SLIDING ENTRY DOORS–FINISH TO MATCH (FF1)
8. PREFINISHED METAL COPING (MF1)
9. PREFINISHED 3"ø DOWNSPOUT –SEE DTL 2/A8.3, 4/A8.3 (PT1)
10. PREFINISHED ALUMINUM STOREFRONT WINDOWS, TYP. (FF2) W/ SPANDREL GLAZING
11. METAL FLASHING (PT1)
12. EXTERIOR METAL PANEL CLADDING (MF1)
13. EXTERIOR STRUCTURAL STEEL BEAM–S.S.D. (PT3)
14. HOLLOW METAL DOOR & FRAME (PT2)
15. EXTERIOR ALUMINUM PLATE PANEL CLADDING (SEE NOTE 10) (MF2)
16. ENCLOSED ENTRY CANOPY (MF3)
17. STEEL FRAME CANOPY (PT2) (FF3)
18. ALUMN. STOREFRONT DOORS (FF2)
19. GRADE– SCD.
20. ROUND STRUCTURAL STEEL COLUMN–S.S.D. (PT3)
21. CEMENT PLASTER W/ ACRYLIC FINISH (ST1)
22. CAST IN PLACE CONCRETE WALL– SSD
24. CEMENT PLASTER CHANNEL SCREED REVEAL
25. OVERFLOW DRAIN DOWNSPOUT NOZZLE–S.P.D.(SEE DTL.5/A8.3)

SHEET NOTES

1. REFER TO ARCHITECTURAL PLAN SHEETS FOR PARTITION HEIGHTS – TYP. SEE SHEET A9.1 FOR PARTITION TYPES
2. SEE MATERIAL AND FINISH SCHEDULE FOR DESCRIPTION OF MATERIALS AND SYSTEMS.
3. SEE SHEET A11.1 AND A11.2 FOR GLASS TYPES AND LOCATIONS.
4. SEE DIMENSIONS ON WALL SECTIONS FOR ALL HORIZONTAL REVEALS AND SCORING.
5. NOTE ALL DIMENSIONS FOR VERTICAL REVEALS AND SCORELINES ARE TO THE CENTERLINE OF REVEAL
6. REFER TO MECH. ELECT. PLUMB. DRAWINGS FOR FULL EXTENT OF ROOF PENETRATIONS.
7. NOT USED.
8. NOT USED.

BSA Architects
A California Corporation
350 PACIFIC AVENUE
SAN FRANCISCO, CA 94111
415-781-1526

DIABLO VALLEY COLLEGE

DIABLO VALLEY COLLEGE NEW BOOKSTORE

321 GOLF CLUB RD.
PLEASANT HILL, CALIFORNIA

© 2003 BSA Architects
"All drawings and written material appearing herein constitute the original and unpublished work of the architect and the same may not be duplicated, used, or disclosed without the written consent of the architect."

DATE: 23 JULY, 2004

REVISIONS:

LICENSED ARCHITECT JOHN ASHWORTH No. C26747 REN. 1-31-05 STATE OF CALIFORNIA

BID SET

SHEET TITLE:

BUILDING SECTIONS

IDENTIFICATION STAMP
DIVISION OF THE STATE ARCHITECT
APPL 01 105925
AC LE FLS ED SS A1
DATE: 5-12-04 JUL 20 2004

BLDG. ID: 098
ID CODE: 312098-109.01-A

DRAWN BY: GL
CHECKED BY: JA
JOB NO: 0307

SHEET A3.10

7/28/03 A03-10.DWG

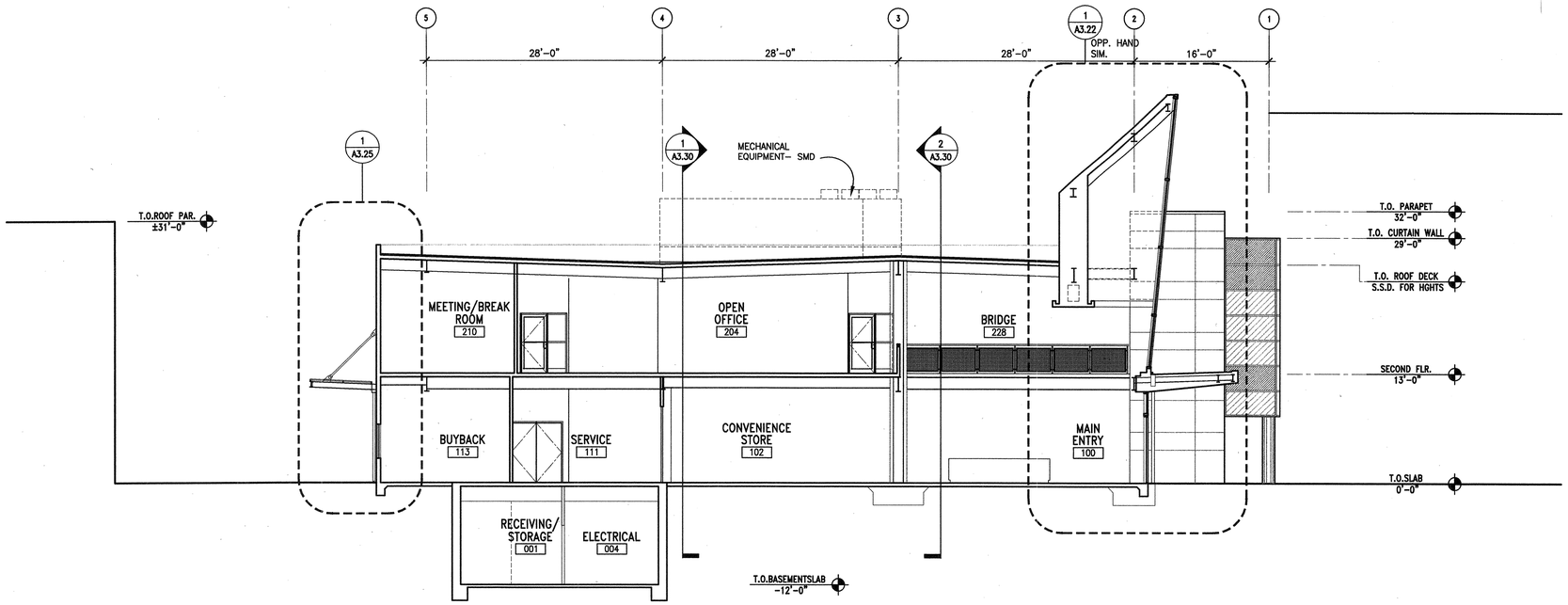

1 SECTION THROUGH CONVENIENCE STORE (NORTH-SOUTH)

1/8"=1'-0"

BSECT-1

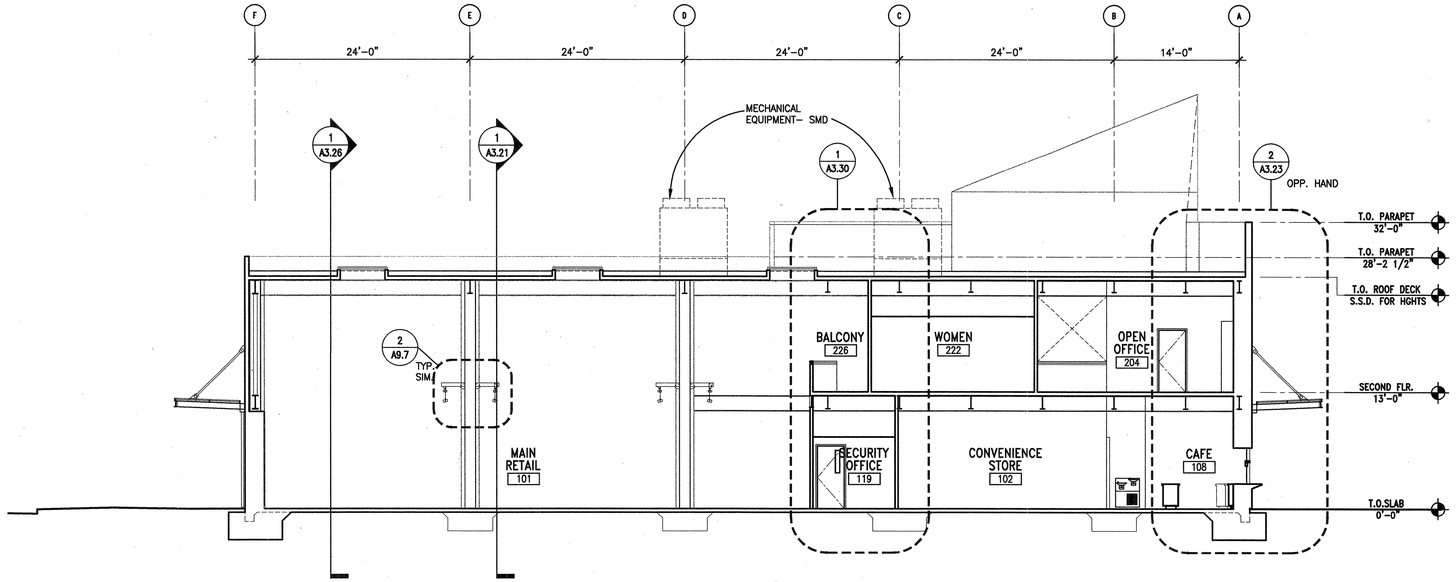

2 SECTION THROUGH CAFE (WEST-EAST)

1/8"=1'-0"

BSECT-1

TYP. EXTERIOR MATERIALS LEGEND

1. PREFINISHED STANDING SEAM METAL ROOFING
2. PREFINISHED ALUMINUM STOREFRONT ENTRY, TYP. (FF1) W/ STANDARD GLAZING
3. CURTAIN WALL SYSTEM W/ CAPTURED 4 SIDES TYP. (FF2) W/ SPANDREL GLAZING
4. SLOPED CURTAIN WALL SYSTEM CAPTURED (FF1) (EXTERIOR) 4 SIDES TYP. W/ LOW-E GLAZING (FF2) (INTERIOR)
5. PREFINISHED ALUMINUM STOREFRONT WINDOWS, TYP. (FF2) W/ STANDARD GLAZING
6. CURTAIN WALL SYSTEM W/ CAPTURED 4 SIDES TYP. (FF2) W/ STANDARD GLAZING
7. AUTOMATIC GLASS SLIDING ENTRY DOORS-FINISH TO MATCH (FF1)
8. PREFINISHED METAL COPING (MF1)
9. PREFINISHED 3"ø DOWNSPOUT -SEE DTL 2/A8.3, 4/A8.3 (PT1)
10. PREFINISHED ALUMINUM STOREFRONT WINDOWS, TYP. (FF2) W/ SPANDREL GLAZING
11. METAL FLASHING (PT1)
12. EXTERIOR METAL PANEL CLADDING (MF1)
13. EXTERIOR STRUCTURAL STEEL BEAM-S.S.D. (PT3)
14. HOLLOW METAL DOOR & FRAME (PT2)
15. EXTERIOR ALUMINUM PLATE PANEL CLADDING (SEE NOTE 10) (MF2)
16. ENCLOSED ENTRY CANOPY (MF3)
17. STEEL FRAME CANOPY (PT2) (FF3)
18. ALUMN. STOREFRONT DOORS (FF2)
19. GRADE- SCD.
20. ROUND STRUCTURAL STEEL COLUMN-S.S.D. (PT3)
21. CEMENT PLASTER W/ ACRYLIC FINISH (ST1)
22. CAST IN PLACE CONCRETE WALL- SSD
24. CEMENT PLASTER CHANNEL SCREED REVEAL
25. OVERFLOW DRAIN DOWNSPOUT NOZZLE-S.P.D.(SEE DTL.5/A8.3)

SHEET NOTES

1. REFER TO ARCHITECTURAL PLAN SHEETS FOR PARTITION HEIGHTS - TYP. SEE SHEET A9.1 FOR PARTITION TYPES
2. SEE MATERIAL AND FINISH SCHEDULE FOR DESCRIPTION OF MATERIALS AND SYSTEMS.
3. SEE SHEET A11.1 AND A11.2 FOR GLASS TYPES AND LOCATIONS.
4. SEE DIMENSIONS ON WALL SECTIONS FOR ALL HORIZONTAL REVEALS AND SCORING.
5. NOTE ALL DIMENSIONS FOR VERTICAL REVEALS AND SCORELINES ARE TO THE CENTERLINE OF REVEAL
6. REFER TO MECH. ELECT. PLUMB. DRAWINGS FOR FULL EXTENT OF ROOF PENETRATIONS.
7. NOT USED.
8. NOT USED.

BSA Architects
A California Corporation
350 PACIFIC AVENUE
SAN FRANCISCO, CA 94111
415-781-1526

DIABLO VALLEY COLLEGE

DIABLO VALLEY COLLEGE NEW BOOKSTORE

321 GOLF CLUB RD.
PLEASANT HILL, CALIFORNIA

© 2003 BSA Architects
"All drawings and written material appearing herein constitute the original and unpublished work of the architect and the same may not be duplicated, used, or disclosed without the written consent of the architect."

DATE: 23 JULY, 2004

REVISIONS:

LICENSED ARCHITECT JOHN ASHWORTH No. C26747 REN. 1-31-05 STATE OF CALIFORNIA

BID SET

SHEET TITLE:

BUILDING SECTIONS

IDENTIFICATION STAMP
DIVISION OF THE STATE ARCHITECT
105925
APPL 01
AC LE FLS EO SS AI
DATE: 5-12-04 JUL 26 2004

BLDG. ID: 098
ID CODE: 312098-109.01-A

DRAWN BY: GL
CHECKED BY: JA
JOB NO: 0307

SHEET A3.11

0 1' 4' 8' 16' 24'

7/22/03 A03-11.DWG

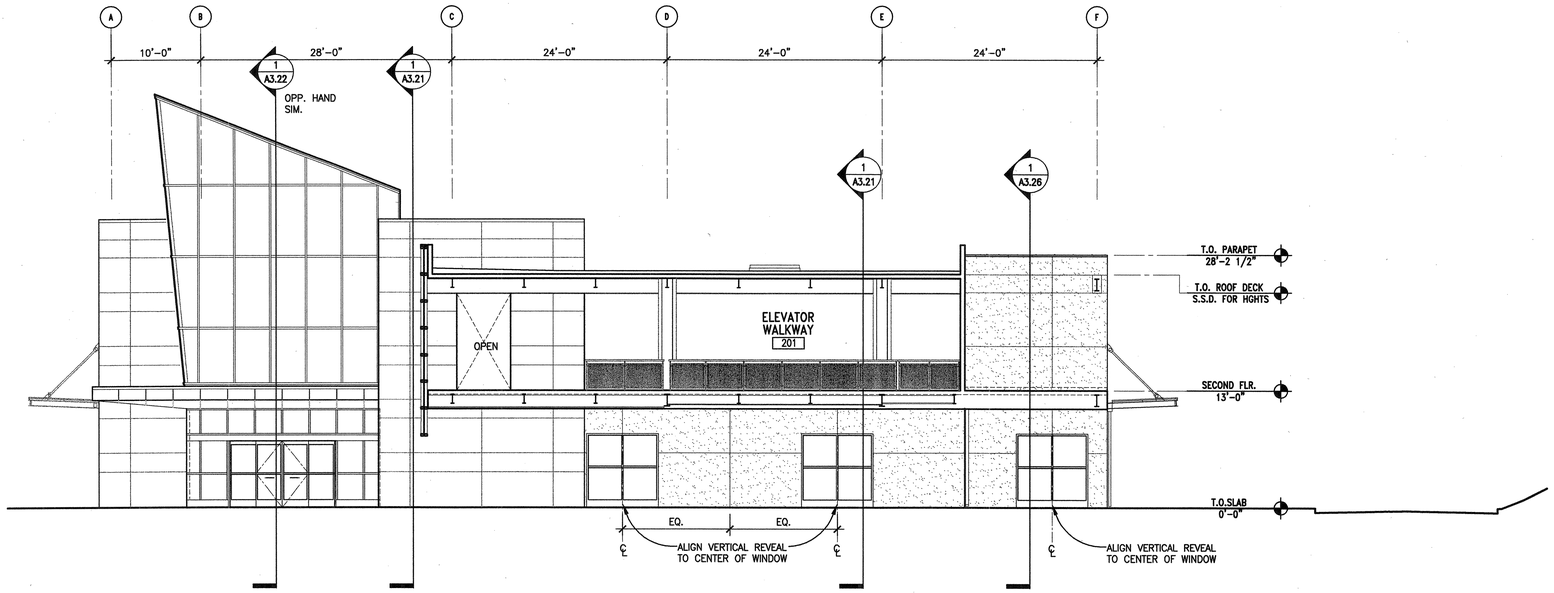

1 SECTION THROUGH WALKWAY (EAST -WEST)

1/8"=1'-0" BSECT-1

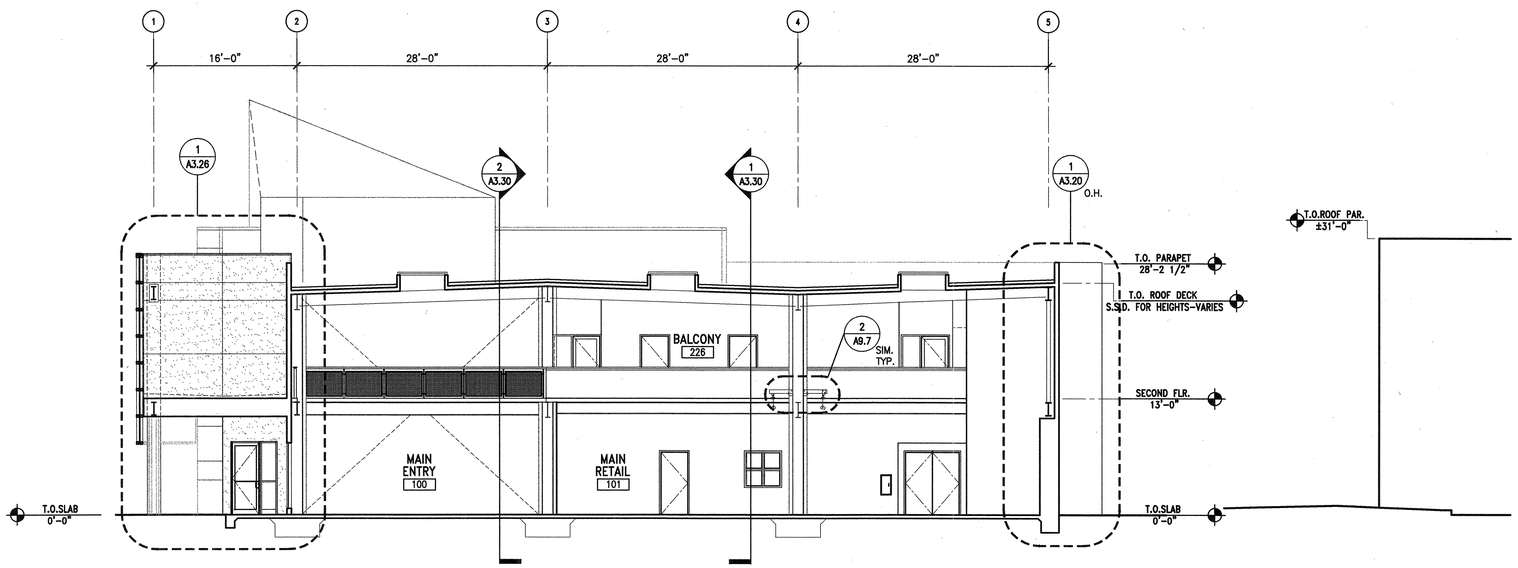

2 SECTION THROUGH RETAIL (NORTH-SOUTH)

1/8"=1'-0" BSECT-1

TYP. EXTERIOR MATERIALS LEGEND

1. PREFINISHED STANDING SEAM METAL ROOFING
2. PREFINISHED ALUMINUM STOREFRONT ENTRY, TYP. (FF1) W/ STANDARD GLAZING
3. CURTAIN WALL SYSTEM W/ CAPTURED 4 SIDES TYP. (FF2) W/ SPANDREL GLAZING
4. SLOPED CURTAIN WALL SYSTEM CAPTURED (FF1) (EXTERIOR) 4 SIDES TYP. W/ LOW-E GLAZING (FF2) (INTERIOR)
5. PREFINISHED ALUMINUM STOREFRONT WINDOWS, TYP. (FF2) W/ STANDARD GLAZING
6. CURTAIN WALL SYSTEM W/ CAPTURED 4 SIDES TYP. (FF2) W/ STANDARD GLAZING
7. AUTOMATIC GLASS SLIDING ENTRY DOORS-FINISH TO MATCH (FF1)
8. PREFINISHED METAL COPING (MF1)
9. PREFINISHED 3"ø DOWNSPOUT -SEE DTL 2/A8.3, 4/A8.3 (PT1)
10. PREFINISHED ALUMINUM STOREFRONT WINDOWS, TYP. (FF2) W/ SPANDREL GLAZING
11. METAL FLASHING (PT1)
12. EXTERIOR METAL PANEL CLADDING (MF1)
13. EXTERIOR STRUCTURAL STEEL BEAM-S.S.D. (PT3)
14. HOLLOW METAL DOOR & FRAME (PT2)
15. EXTERIOR ALUMINUM PLATE PANEL CLADDING (SEE NOTE 10) (MF2)
16. ENCLOSED ENTRY CANOPY (MF3)
17. STEEL FRAME CANOPY (PT2) (FF3)
18. ALUMN. STOREFRONT DOORS (FF2)
19. GRADE- SCD.
20. ROUND STRUCTURAL STEEL COLUMN-S.S.D. (PT3)
21. CEMENT PLASTER W/ ACRYLIC FINISH (ST1)
22. CAST IN PLACE CONCRETE WALL- SSD
24. CEMENT PLASTER CHANNEL SCREED REVEAL
25. OVERFLOW DRAIN DOWNSPOUT NOZZLE-S.P.D.(SEE DTL.5/A8.3)

SHEET NOTES

1. REFER TO ARCHITECTURAL PLAN SHEETS FOR PARTITION HEIGHTS - TYP. SEE SHEET A9.1 FOR PARTITION TYPES
2. SEE MATERIAL AND FINISH SCHEDULE FOR DESCRIPTION OF MATERIALS AND SYSTEMS.
3. SEE SHEET A11.1 AND A11.2 FOR GLASS TYPES AND LOCATIONS.
4. SEE DIMENSIONS ON WALL SECTIONS FOR ALL HORIZONTAL REVEALS AND SCORING.
5. NOTE ALL DIMENSIONS FOR VERTICAL REVEALS AND SCORELINES ARE TO THE CENTERLINE OF REVEAL
6. REFER TO MECH. ELECT. PLUMB. DRAWINGS FOR FULL EXTENT OF ROOF PENETRATIONS.
7. NOT USED.
8. NOT USED.

0 1' 4' 8' 16' 24'

BSA Architects
A California Corporation
350 PACIFIC AVENUE
SAN FRANCISCO, CA 94111
415-781-1526

DIABLO VALLEY COLLEGE

DIABLO VALLEY COLLEGE NEW BOOKSTORE

321 GOLF CLUB RD.
PLEASANT HILL, CALIFORNIA

© 2003 BSA Architects
"All drawings and written material appearing herein constitute the original and unpublished work of the architect and the same may not be duplicated, used, or disclosed without the written consent of the architect."

DATE: 23 JULY, 2004

REVISIONS:

LICENSED ARCHITECT JOHN ASHWORTH No. C26747 REN. 1-31-05 STATE OF CALIFORNIA

BID SET

SHEET TITLE:

BUILDING SECTIONS

IDENTIFICATION STAMP
DIVISION OF THE STATE ARCHITECT
105925
APPL 01
AC LE FLS EO SS AI
DATE: 5-12-04 JUL 26 2004

BLDG. ID: 098
ID CODE: 312098-109.01-A

DRAWN BY: GL
CHECKED BY: JA
JOB NO: 0307

SHEET A3.12

8/27/03 A03-12.DWG

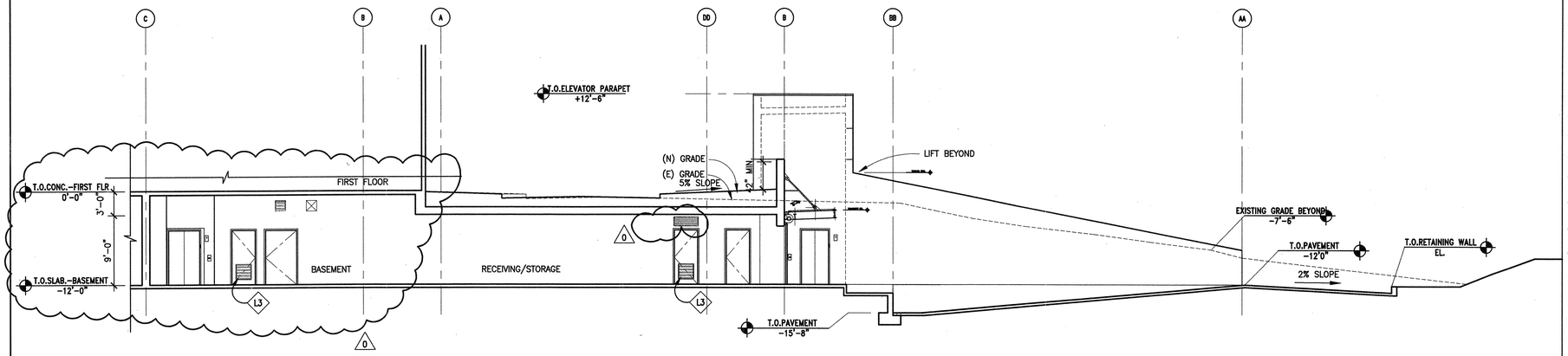

1 SECTION THRU LOADING LOCK AND TUNNEL

1/8"=1'-0"

BSECT-1

TYP. EXTERIOR MATERIALS LEGEND

1. PREFINISHED STANDING SEAM METAL ROOFING
2. PREFINISHED ALUMINUM STOREFRONT ENTRY, TYP. (FF1) W/ STANDARD GLAZING
3. CURTAIN WALL SYSTEM W/ CAPTURED 4 SIDES TYP. (FF2) W/ SPANDREL GLAZING
4. SLOPED CURTAIN WALL SYSTEM CAPTURED 4 SIDES TYP. W/ LOW-E GLAZING (FF1) (EXTERIOR) (FF2) (INTERIOR)
5. PREFINISHED ALUMINUM STOREFRONT WINDOWS, TYP. (FF2) W/ STANDARD GLAZING
6. CURTAIN WALL SYSTEM W/ CAPTURED 4 SIDES TYP. (FF2) W/ STANDARD GLAZING
7. AUTOMATIC GLASS SLIDING ENTRY DOORS-FINISH TO MATCH (FF1)
8. PREFINISHED METAL COPING (MF1)
9. PREFINISHED 3"ø DOWNSPOUT -SEE DTL 2/A8.3, 4/A8.3 (PT1)
10. PREFINISHED ALUMINUM STOREFRONT WINDOWS, TYP. (FF2) W/ SPANDREL GLAZING
11. METAL FLASHING (PT1)
12. EXTERIOR METAL PANEL CLADDING (MF1)
13. EXTERIOR STRUCTURAL STEEL BEAM-S.S.D. (PT3)
14. HOLLOW METAL DOOR & FRAME (PT2)
15. EXTERIOR ALUMINUM PLATE PANEL CLADDING (SEE NOTE 10) (MF2)
16. ENCLOSED ENTRY CANOPY (MF3)
17. STEEL FRAME CANOPY (PT2) (FF3)
18. ALUMN. STOREFRONT DOORS (FF2)
19. GRADE- SCD.
20. ROUND STRUCTURAL STEEL COLUMN-S.S.D. (PT3)
21. CEMENT PLASTER W/ ACRYLIC FINISH (ST1)
22. CAST IN PLACE CONCRETE WALL- SSD
24. CEMENT PLASTER CHANNEL SCREED REVEAL
25. OVERFLOW DRAIN DOWNSPOUT NOZZLE-S.P.D.(SEE DTL.5/A8.3)

SHEET NOTES

1. CONTROL JOINTS AND HORIZONTAL REVEALS TO MATCH AROUND ALL CORNERS.
2. SEE SHEET A11.4 FOR EXT. MATERIALS SCHEDULE
3. SEE SHEET A11.1 AND A11.2 FOR GLASS TYPES AND LOCATIONS.
4. SEE DIMENSIONS ON WALL SECTIONS FOR ALL HORIZONTAL REVEALS AND SCORING.
5. NOTE ALL DIMENSIONS FOR VERTICAL REVEALS AND SCORELINES ARE TO THE CENTERLINE OF REVEAL
6. SEE SHEET A3.12 FOR ALL OTHER VERTICAL REVEAL DIMENSIONS NOT NOTED ON ELEVATIONS.
7. HATCH DENOTES SPANDREL GLASS-SEE WINDOW TYPES AND SCHEDULE -A11.2, A11.3
8. GRAFFITI COATING TO BE APPLIED CONSISTENTLY AROUND PERIMETER OF BUILDING UP TO 12'-0" A.F.F. USE HORIZONTAL SCORING/ REVEALS AS DATUM. SEE SPECIFICATIONS
9. ALL DIMENSIONS IN ELEVATION ARE TO F.O.F. U.N.O.
10. AT ALL OCCURENCES OF METAL CLADDING ON BUILDING SKIN, ALUMINUM PLATE PANEL CLADDING (MF2) ONLY TO BE APPLIED AT FIRST ROW OF PANELS AT THE BASE OF BUILDING. ALL PANELS ABOVE DATUM LINE NOTED ON DRAWING, TO BE "MF1"

0 1' 4' 8' 16' 24'

BSA Architects
A California Corporation
350 PACIFIC AVENUE
SAN FRANCISCO, CA 94111
415-781-1526

DIABLO VALLEY COLLEGE

DIABLO VALLEY COLLEGE NEW BOOKSTORE

321 GOLF CLUB RD.
PLEASANT HILL, CALIFORNIA

© 2003 BSA Architects
"All drawings and written material appearing herein constitute the original and unpublished work of the architect and the same may not be duplicated, used, or disclosed without the written consent of the architect."

DATE: 23 JULY, 2004

REVISIONS:
0 REVISIONS- 23 JULY, 2004

LICENSED ARCHITECT JOHN ASHWORTH No. C26747 REN. 1-31-05 STATE OF CALIFORNIA

BID SET

SHEET TITLE:

BUILDING SECTIONS

IDENTIFICATION STAMP
DIVISION OF THE STATE ARCHITECT
105925
APPL 01
AC LE FLS EJ SS AI
DATE: 5-12-04 JUL 20 2004

BLDG. ID: 098
ID CODE: 312098-109.01-A

DRAWN BY: WC
CHECKED BY: JA
JOB NO: 0307

SHEET
A3.13

8/22/03 A03-13.DWG

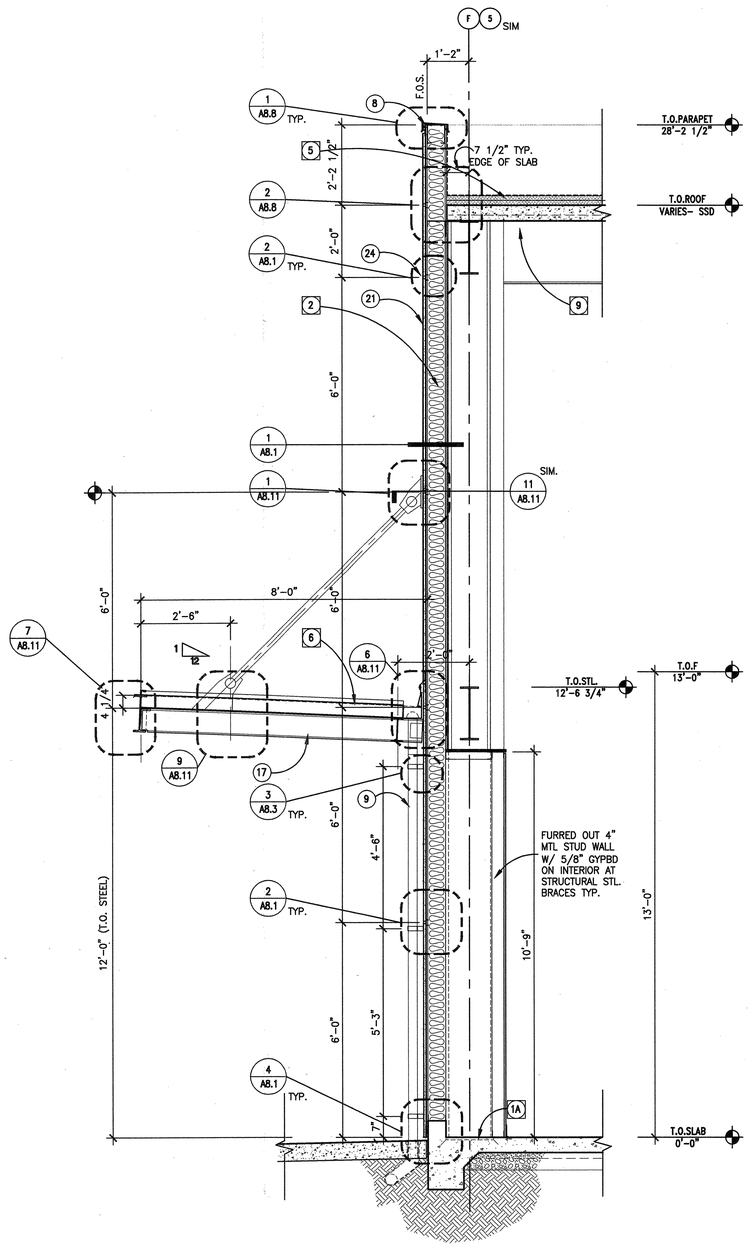

2 TYP. WALL SECTION @ RETAIL

1/2"=1'-0"

BSECT-1

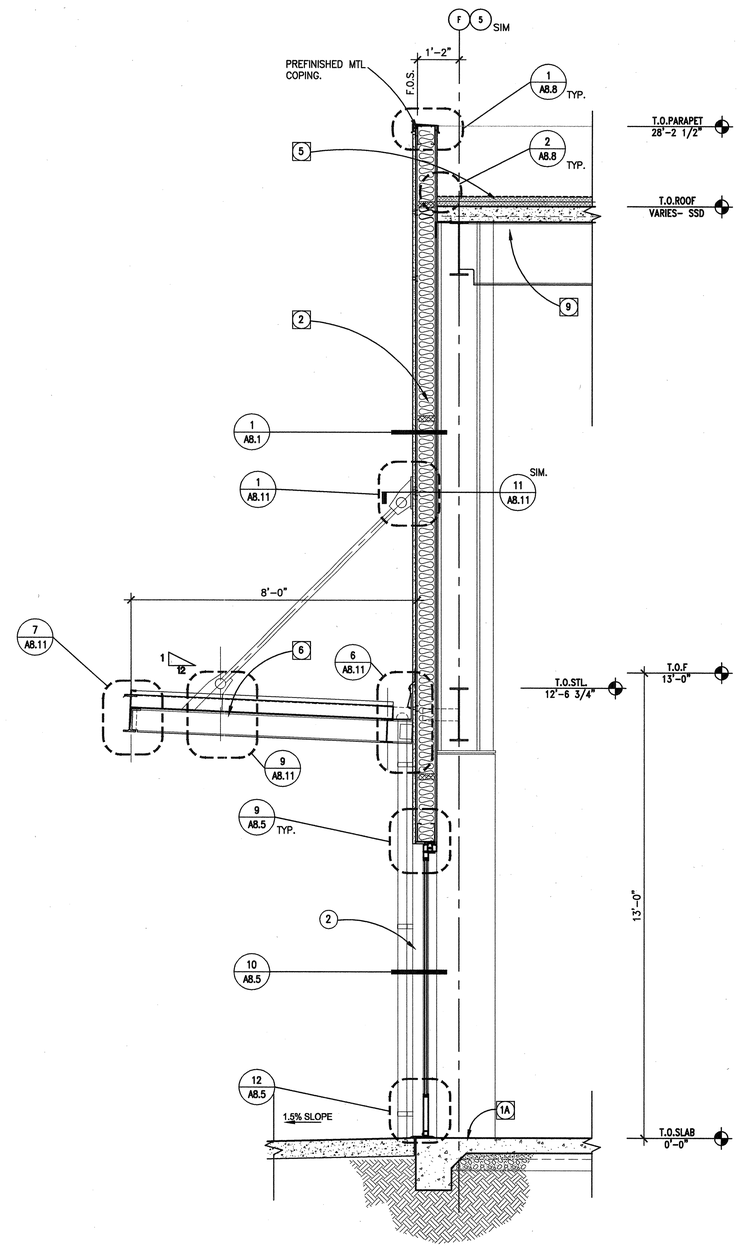

1 TYP. WALL SECTION @ RETAIL

1/2"=1'-0"

BSECT-1

WALL SECTION NOTES:

1A FLOOR ASSEMBLY 1: TYPICAL SLAB ON GRADE CONSTRUCTION: REINFORCED CONCRETE SLAB-ON-GRADE, SSD. FOR REINFORCING, CURBS & SLAB DEPRESSIONS, OVER VAPOR RETARDER, OVER COMPACTED GRANULAR FILL, SEE FINISH SCHEDULE FOR FLOOR FINISHES

1B FLOOR ASSEMBLY 2: TYPICAL CONC. OVER MTL. DECK CONSTRUCTION: 3 1/4" REINFORCED LIGHT WEIGHT CONCRETE FILL OVER 2" MTL. DECK, SSD. FOR REINFORCING, CURBS & SLAB DEPRESSIONS, OVER STL. STRUCTURE, SEE FINISH SCHEDULE FOR FLOOR FINISHES

2 WALL ASSEMBLY 1: ACRYLIC FINISH TOP COAT OVER 2 LAYERS CEMENT PLASTER OVER PAPER BACKED EXPANDED MTL. LATH OVER 1 LAYER GRADE "D" BUILDING PAPER OVER 1/2" GYPBD. SHEATHING ON 6" MTL.STUDS W/ R-19 BATT INSULATION W/ VAPOR BARRIER AND 5/8" GYP BD. @ INTERIOR FACE OF WALL. SEE FINISH SCHEDULE FOR INTERIOR FINISHES.

3 WALL ASSEMBLY 2: EXTERIOR HONEYCOMB MTL. SIDING PANEL SYSTEM W/ MTL. BACK UP, OVER 1/2" GYPBD. SHEATHING ON 6" MTL. STUDS W/ R-19 BATT INSULATION W/ VAPOR RETARDER AND 5/8" GYP. BD. @ INTERIOR FACE OF WALL, SEE FINISH SCHEDULE FOR INTERIOR FINISHES

3B WALL ASSEMBLY 3: EXTERIOR MTL. PLATE PANEL SYSTEM W/ MTL. BACK UP, OVER 1/2" GYPBD. SHEATHING ON 6" MTL. STUDS W/ R-19 BATT INSULATION W/ VAPOR RETARDER AND 5/8" GYP. BD. @ INTERIOR FACE OF WALL, SEE FINISH SCHEDULE FOR INTERIOR FINISHES

4A WALL ASSEMBLY 4: ALUMINUM CURTAIN WALL SYSTEM. ATTACHED TO STL. STRUCTURE. SEE FINISH SCHEDULE FOR INTERIOR FINISHES

4B WALL ASSEMBLY 5: NOMINAL 12" C.I.P. REINF. CONC. WALL-SSD. W/ WATERPROOFING MEMBRANE ASSEMBLY. SEE FINISH SCHEDULE FOR INTERIOR FINISHES 0

5A ROOF ASSEMBLY 1: TYPICAL STANDING SEAM METAL ROOF PREFINISHED STANDING SEAM METAL ROOFING OVER 1 LAYER UNDERLAYMENT OVER 1/2" ROOF SHEATHING, TYP. OVER 2 LAYERS 1 1/2' RIGID INSULATION OVER STEEL DECK- SEE STRUCTURAL DWGS.

5B ROOF ASSEMBLY 2: TYPICAL FLAT ROOF SINGLE PLY MEMBRANE ROOFING OVER GYPSUM ROOF SHEATHING, OVER 2 LAYERS (STAGGERED) OF 2" RIGID INSUL., MIN. R-5 PER INCH OVER CONCRETE FILLED STRUCTURAL STL. DECK - SEE STRUCTURAL DWGS. R-20 RIGID INSULATION, VAPOR RETARDER

6 ROOF ASSEMBLY 3: TYPICAL CANOPY ROOF PREFINISHED CORRUGATED MTL. ROOF DECKING, OVER PREFINISHED EXPOSED STEEL STRUCTURE - SEE STRUCTURAL DWGS.

7 CEILING ASSEMBLY 1: TYP. SUSPENDED GYP. BD. CEILING 5/8" GYP. BD. ATTACHED TO 7/8" HAT CHANNELS @ 24" O.C. FASTENED TO 1 1/2" "C" CHANNELS @ 48" O.C. SUSPENDED FROM STRUCTURE ABOVE BY 16 GA. WIRE HANGERS. SEE FINISH SCHEDULE FOR INTERIOR FINISHES.

8 CEILING ASSEMBLY 2: TYP. SUSPENDED ACOUSTIC PANEL CEILING. SEE FINISH SCHEDULE FOR INTERIOR FINISHES.

9 CEILING ASSEMBLY 3: TYP. EXPOSED CEILING WITH PAINTED EXPOSED STEEL DECK (SEE FINISH SCHEDULE), ARCHITECTURAL STEEL WHERE REQUIRED

10 CEILING ASSEMBLY 4: TYP. EXPOSED CEILING WITH PAINTED EXPOSED STEEL DECK

11 CEILING ASSEMBLY 5: TYP. EXT. PREFINISHED CORRUGATED MTL. DECK CEILING PANEL. ATTACHED TO STRUCTURE ABOVE. SEE FINISH SCHEDULE

TYP. EXTERIOR MATERIALS LEGEND

1. PREFINISHED STANDING SEAM METAL ROOFING
2. PREFINISHED ALUMINUM STOREFRONT ENTRY, TYP. (FF1) W/ STANDARD GLAZING
3. CURTAIN WALL SYSTEM W/ CAPTURED 4 SIDES TYP. (FF2) W/ SPANDREL GLAZING
4. SLOPED CURTAIN WALL SYSTEM CAPTURED (FF1) (EXTERIOR) 4 SIDES TYP. W/ LOW-E GLAZING (FF2) (INTERIOR)
5. PREFINISHED ALUMINUM STOREFRONT WINDOWS, TYP. (FF2) W/ STANDARD GLAZING
6. CURTAIN WALL SYSTEM W/ CAPTURED 4 SIDES TYP. (FF2) W/ STANDARD GLAZING
7. AUTOMATIC GLASS SLIDING ENTRY DOORS-FINISH TO MATCH (FF1)
8. PREFINISHED METAL COPING (MF1)
9. PREFINISHED 3"ø DOWNSPOUT -SEE DTL 2/A8.3, 4/A8.3 (PT1)
10. PREFINISHED ALUMINUM STOREFRONT WINDOWS, TYP. (FF2) W/ SPANDREL GLAZING
11. METAL FLASHING (PT1)
12. EXTERIOR METAL PANEL CLADDING (MF1)
13. EXTERIOR STRUCTURAL STEEL BEAM-S.S.D. (PT3)
14. HOLLOW METAL DOOR & FRAME (PT2)
15. EXTERIOR ALUMINUM PLATE PANEL CLADDING (SEE NOTE 10) (MF2)
16. ENCLOSED ENTRY CANOPY (MF3)
17. STEEL FRAME CANOPY (PT2) (FF3)
18. ALUMN. STOREFRONT DOORS (FF2)
19. GRADE- SCD.
20. ROUND STRUCTURAL STEEL COLUMN-S.S.D. (PT3)
21. CEMENT PLASTER W/ ACRYLIC FINISH (ST1)
22. CAST IN PLACE CONCRETE WALL- SSD
24. CEMENT PLASTER CHANNEL SCREED REVEAL
25. OVERFLOW DRAIN DOWNSPOUT NOZZLE-S.P.D.(SEE DTL.5/A8.3)

BSA Architects
A California Corporation
350 PACIFIC AVENUE
SAN FRANCISCO, CA 94111
415-781-1526

DIABLO VALLEY COLLEGE

DIABLO VALLEY COLLEGE NEW BOOKSTORE

321 GOLF CLUB RD.
PLEASANT HILL, CALIFORNIA

© 2003 BSA Architects
"All drawings and written material appearing herein constitute the original and unpublished work of the architect and the same may not be duplicated, used, or disclosed without the written consent of the architect."

DATE: 23 JULY, 2004

REVISIONS:
0 REVISIONS- 23 JULY, 2004

LICENSED ARCHITECT JOHN ASHWORTH No. C26747 REN. 1-31-05 STATE OF CALIFORNIA

BID SET

SHEET TITLE:
WALL SECTIONS

IDENTIFICATION STAMP
DIVISION OF THE STATE ARCHITECT
105925
APPL 01
AC VE FLS EO SS A-1
DATE: 5-12-04 JUL 26 2004

BLDG. ID: 098
ID CODE: 312098-109.01-A

DRAWN BY: GL
CHECKED BY: JA
JOB NO: 0307

SHEET
A3.20

9/4/03 A03-20.DWG

WALL SECTION NOTES:

WALL SECTION SHEET NOTES:
SEE SHEET A3.20 FOR COMPLETE SHEET NOTES.
SEE SHEET A3.20 FOR TYP. EXTERIOR MATERIALS NOTES

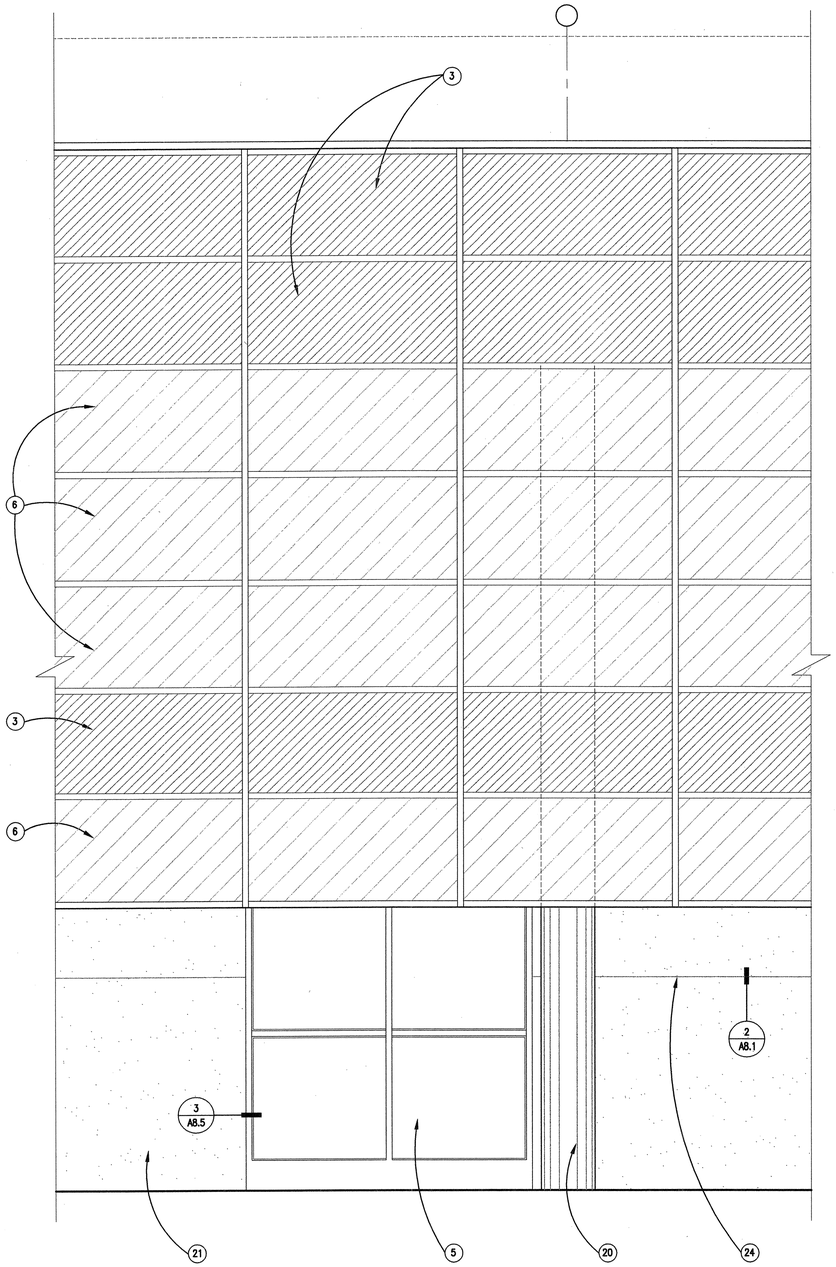

2 ENLARGED CURTAIN WALL ELEVATION
1/2"=1'-0"
BWALSEC-1

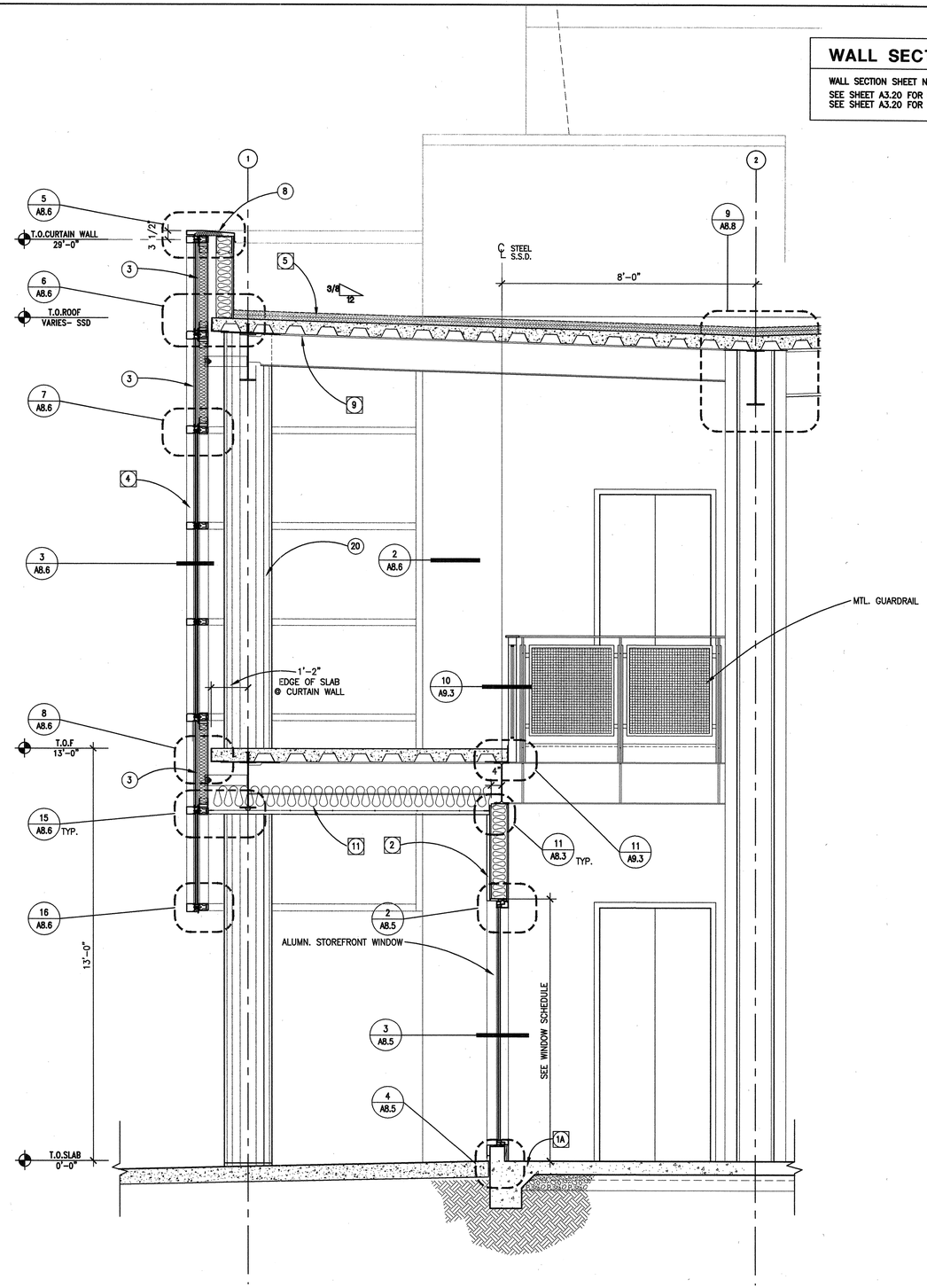

1 TYP. WALL SECTION @ CATWALK & CURTAIN WALL
1/2"=1'-0"
BWALSEC-1

9/16/03 A03-21.DWG

BSA
Architects
A California Corporation
350 PACIFIC AVENUE
SAN FRANCISCO, CA 94111
415-781-1526

DIABLO VALLEY COLLEGE

DIABLO VALLEY COLLEGE NEW BOOKSTORE

321 GOLF CLUB RD.
PLEASANT HILL, CALIFORNIA

© 2003 BSA Architects
"All drawings and written material appearing herein constitute the original and unpublished work of the architect and the same may not be duplicated, used, or disclosed without the written consent of the architect."

DATE: 23 JULY, 2004

REVISIONS:

LICENSED ARCHITECT JOHN ASHWORTH No. C26747 REN. 1-31-05 STATE OF CALIFORNIA

BID SET

SHEET TITLE:
WALL SECTIONS

IDENTIFICATION STAMP
DIVISION OF THE STATE ARCHITECT
105925
APPL 01
AC LE FLS ED SS AI
DATE: 5-12-04 JUL 26 2004

BLDG. ID: 098
ID CODE: 312098-109.01-A

DRAWN BY: GL
CHECKED BY: JA
JOB NO: 0307

SHEET
A3.21

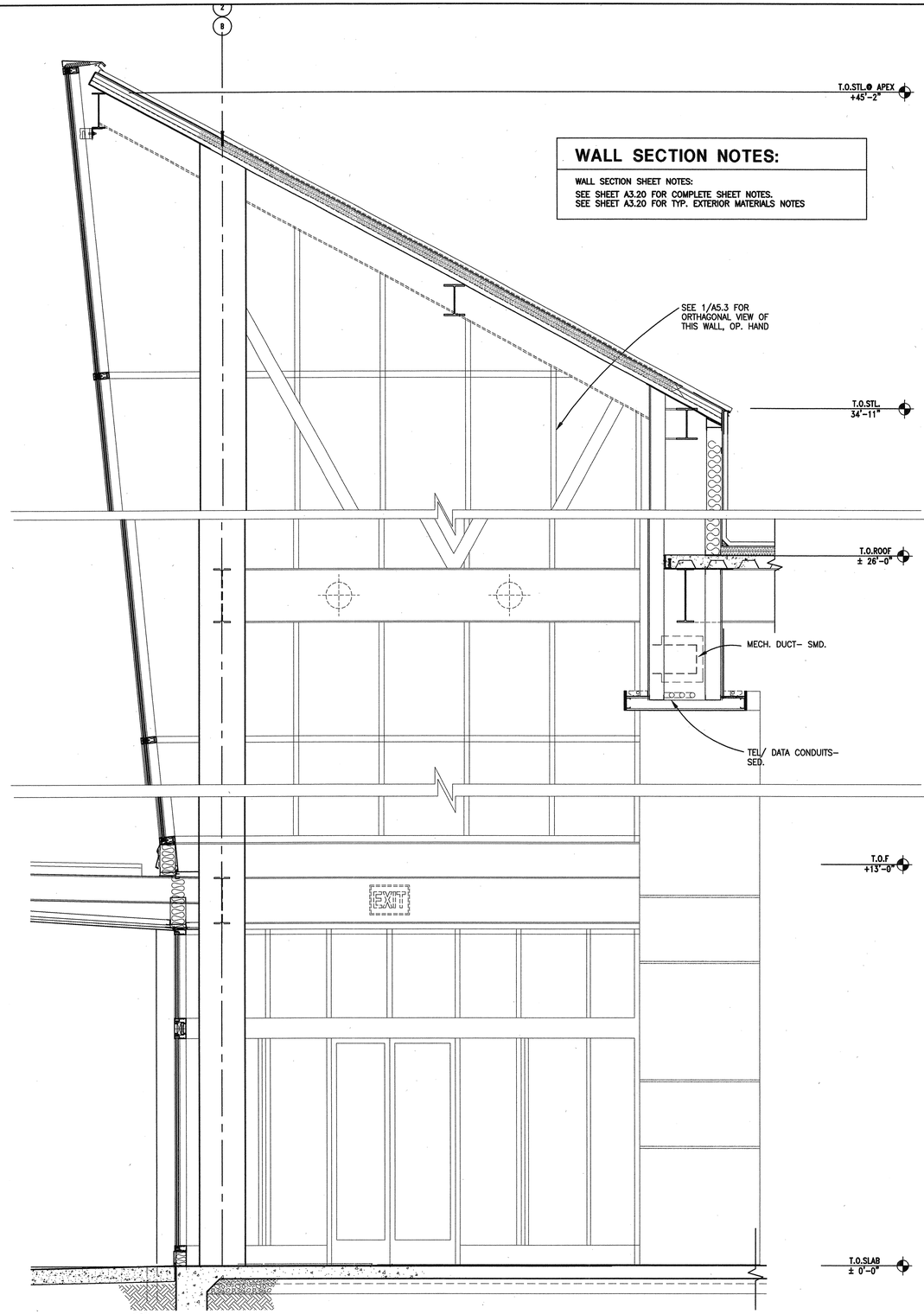

WALL SECTION NOTES:

WALL SECTION SHEET NOTES:

SEE SHEET A3.20 FOR COMPLETE SHEET NOTES.
SEE SHEET A3.20 FOR TYP. EXTERIOR MATERIALS NOTES

2 DIAGONAL SECTION THROUGH ENTRY TOWER

1/2"=1'-0"

BWALSEC-1

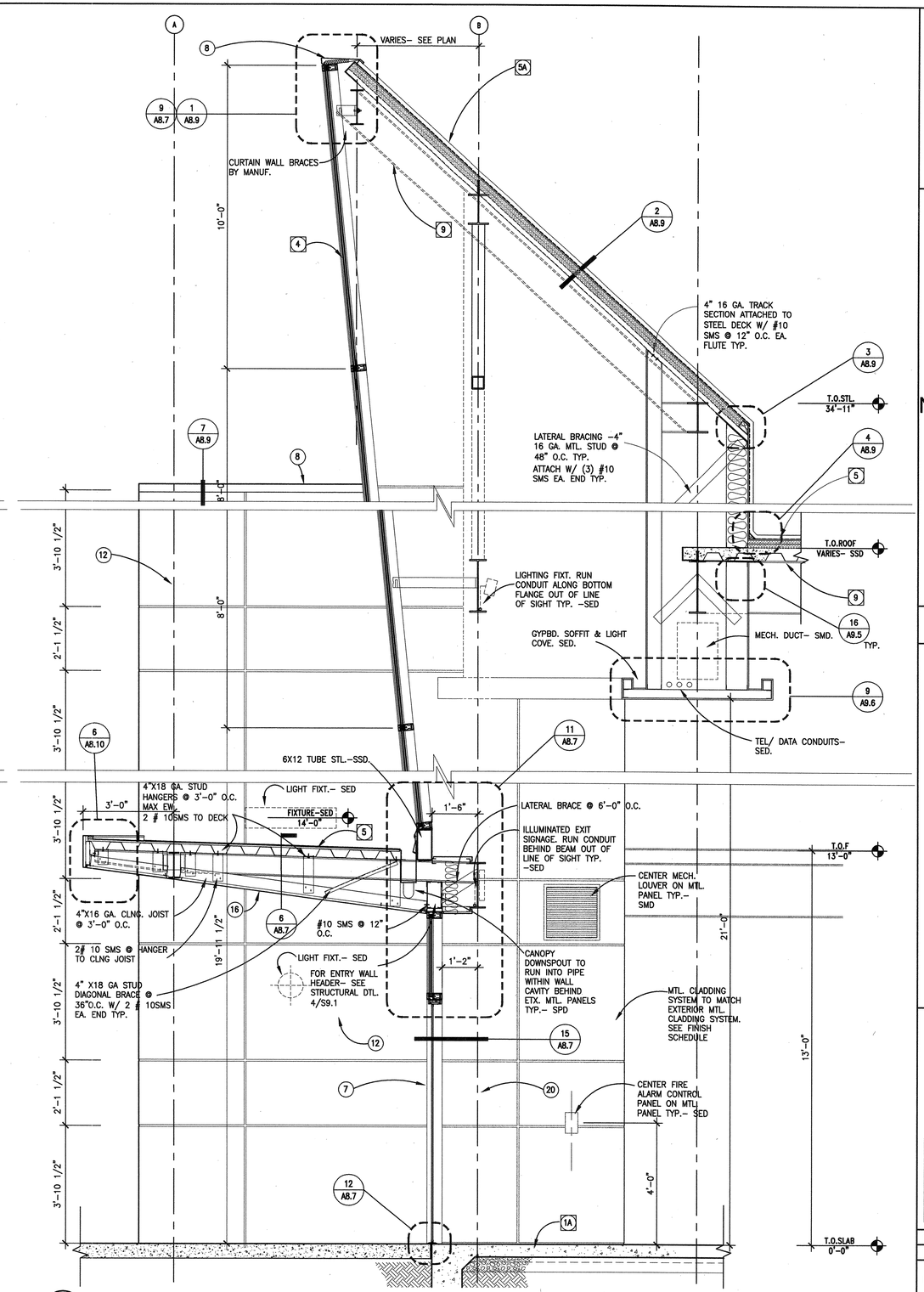

1 TYP. WALL SECTION @ ENTRY TOWER CURTAIN WALL

1/2"=1'-0"

BWALSEC-1

BSA Architects
A California Corporation
350 PACIFIC AVENUE
SAN FRANCISCO, CA 94111
415-781-1526

DIABLO VALLEY COLLEGE

DIABLO VALLEY COLLEGE NEW BOOKSTORE

321 GOLF CLUB RD.
PLEASANT HILL, CALIFORNIA

© 2003 BSA Architects
"All drawings and written material appearing herein constitute the original and unpublished work of the architect and the same may not be duplicated, used, or disclosed without the written consent of the architect."

DATE: 23 JULY, 2004

REVISIONS:

LICENSED ARCHITECT JOHN ASHWORTH No. C26747 REN. 1-31-05 STATE OF CALIFORNIA

BID SET

SHEET TITLE:

WALL SECTIONS

IDENTIFICATION STAMP
DIVISION OF THE STATE ARCHITECT
105925
APPL 01
AC LE FLS ED SS A1
DATE: 5-12-04 JUL 2 6 2004

BLDG. ID: 098
ID CODE: 312098-109.01-A

DRAWN BY: GL
CHECKED BY: JA
JOB NO: 0307

SHEET
A3.22

10/14/03 A03-22.DWG

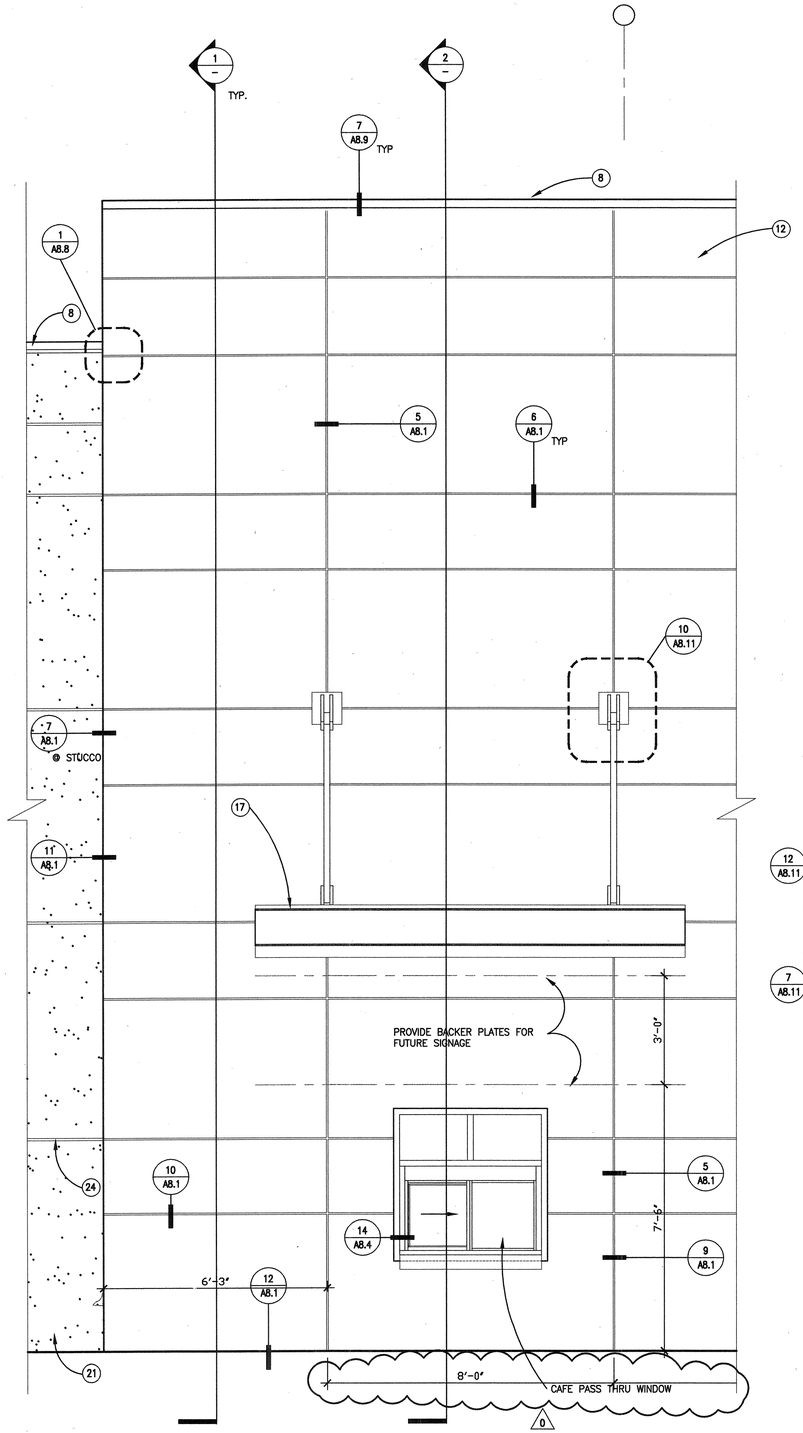

3 ENLARGED CAFE PASS THRU ELEVATION

1/2"=1'-0"

BWALSEC-1

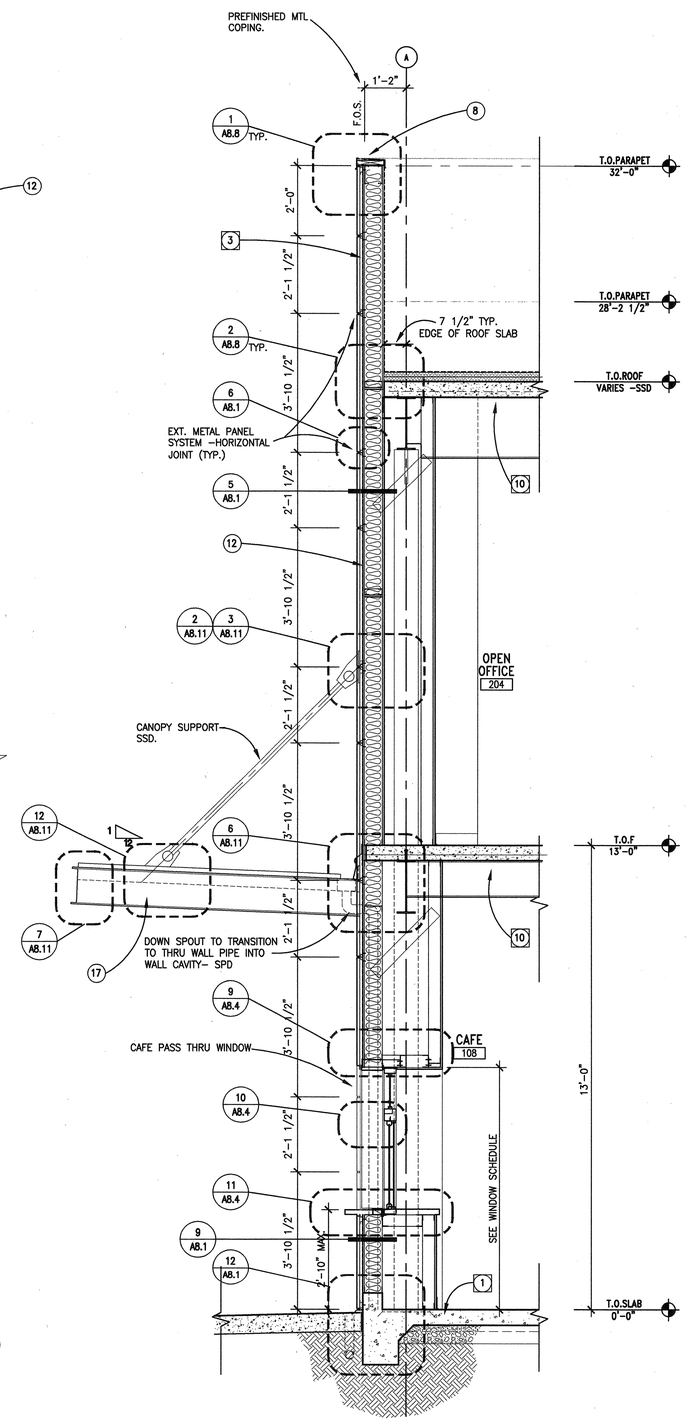

2 TYP. WALL SECTION @ CAFE

1/2"=1'-0"

BWALSEC-1

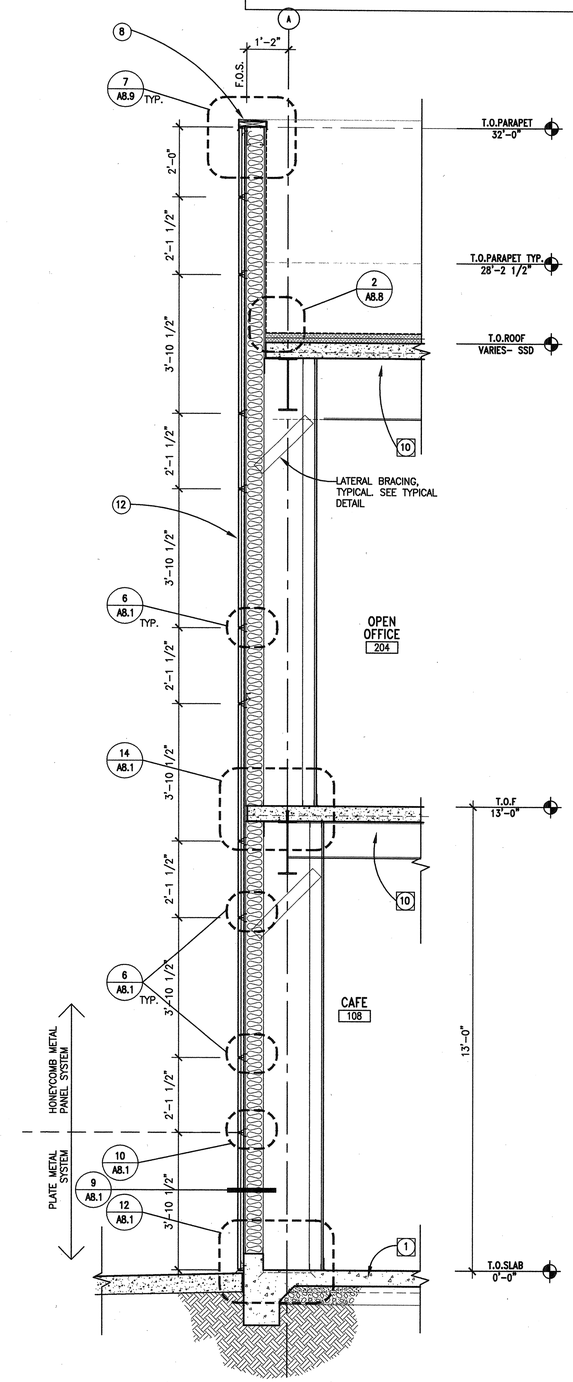

1 TYP. WALL SECTION @ MTL. PANEL SYSTEM

1/2"=1'-0"

BWALSEC-1

WALL SECTION NOTES:

WALL SECTION SHEET NOTES:

SEE SHEET A3.20 FOR COMPLETE SHEET NOTES.
SEE SHEET A3.20 FOR TYP. EXTERIOR MATERIALS NOTES

BSA Architects
A California Corporation
350 PACIFIC AVENUE
SAN FRANCISCO, CA 94111
415-781-1526

DIABLO VALLEY COLLEGE

DIABLO VALLEY COLLEGE NEW BOOKSTORE

321 GOLF CLUB RD.
PLEASANT HILL, CALIFORNIA

© 2003 BSA Architects
"All drawings and written material appearing herein constitute the original and unpublished work of the architect and the same may not be duplicated, used, or disclosed without the written consent of the architect."

DATE: 23 JULY, 2004

REVISIONS:
0 REVISIONS- 23 JULY, 2004

LICENSED ARCHITECT JOHN ASHWORTH No. C26747 REN. 1-31-05 STATE OF CALIFORNIA

BID SET

SHEET TITLE:
WALL SECTIONS

IDENTIFICATION STAMP
DIVISION OF THE STATE ARCHITECT
105925
APPL 01
AC LE FLS EO SS A1
DATE: 5-12-04 JUL 26 2004

BLDG. ID: 098
ID CODE: 312098-109.01-A

DRAWN BY: GL
CHECKED BY: JA
JOB NO: 0307

SHEET A3.23

9/16/03 A03-23.DWG

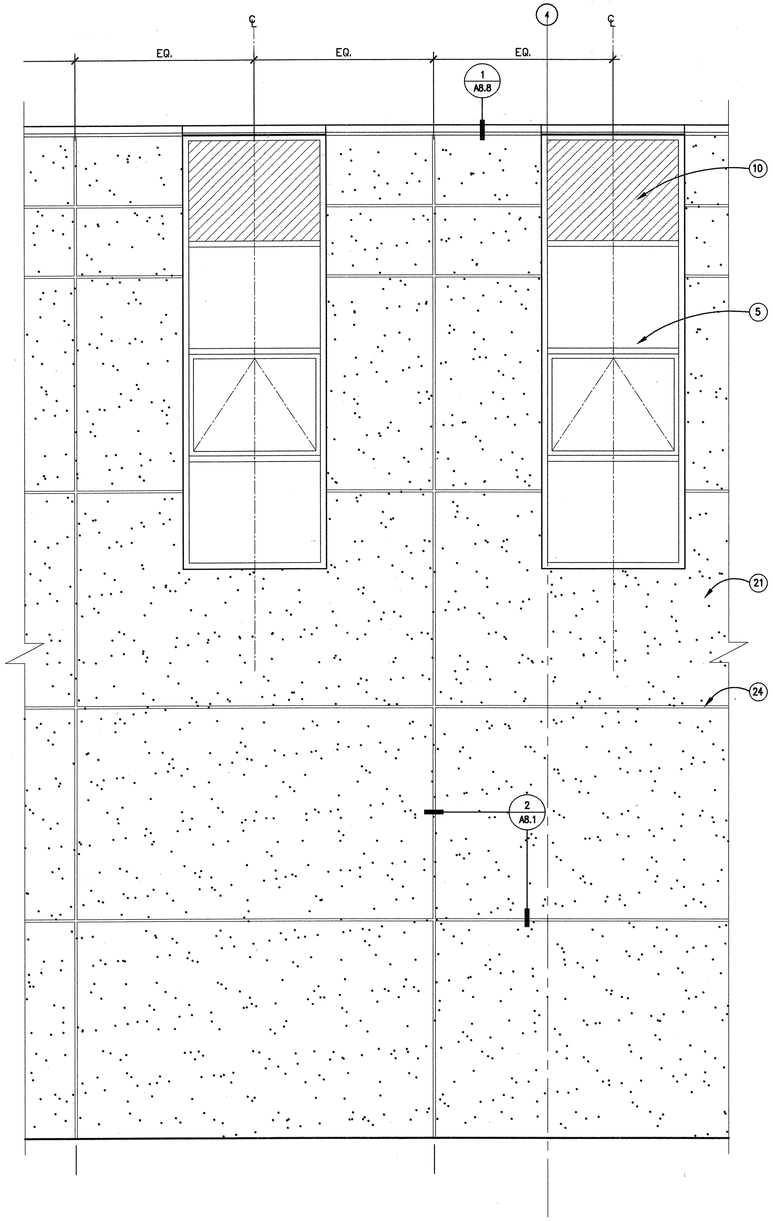

3 ENLARGED EAST ELEVATION
1/2"=1'-0"
BWALSEC-1

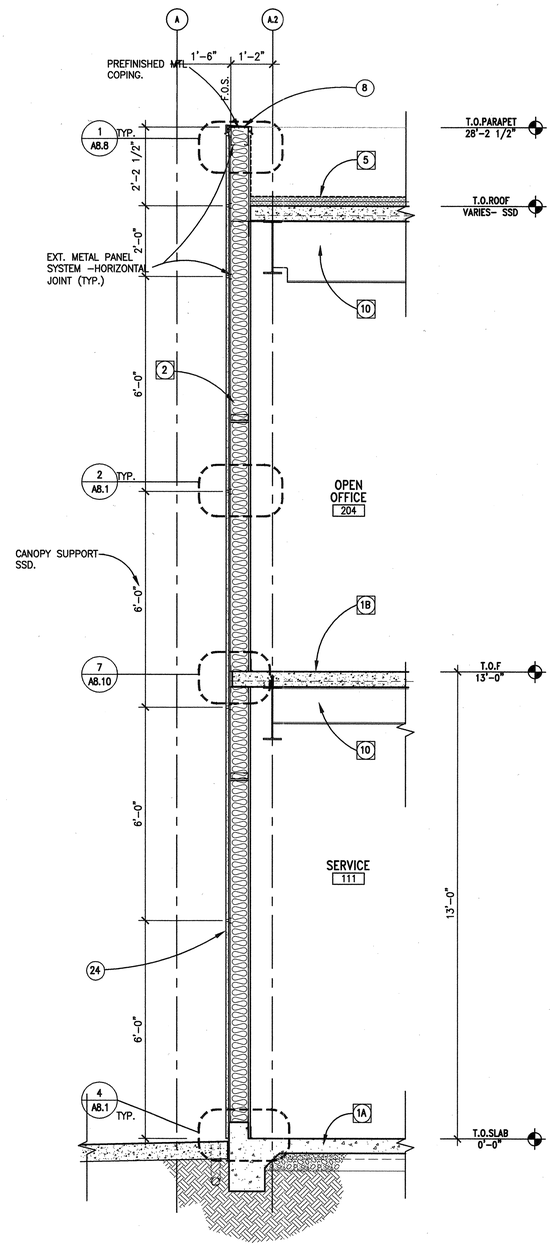

2 TYP. WALL SECTION @ OPEN OFFICE
1/2"=1'-0"
BWALSEC-1

WALL SECTION NOTES:

WALL SECTION SHEET NOTES:
SEE SHEET A3.20 FOR COMPLETE SHEET NOTES.
SEE SHEET A3.20 FOR TYP. EXTERIOR MATERIALS NOTES

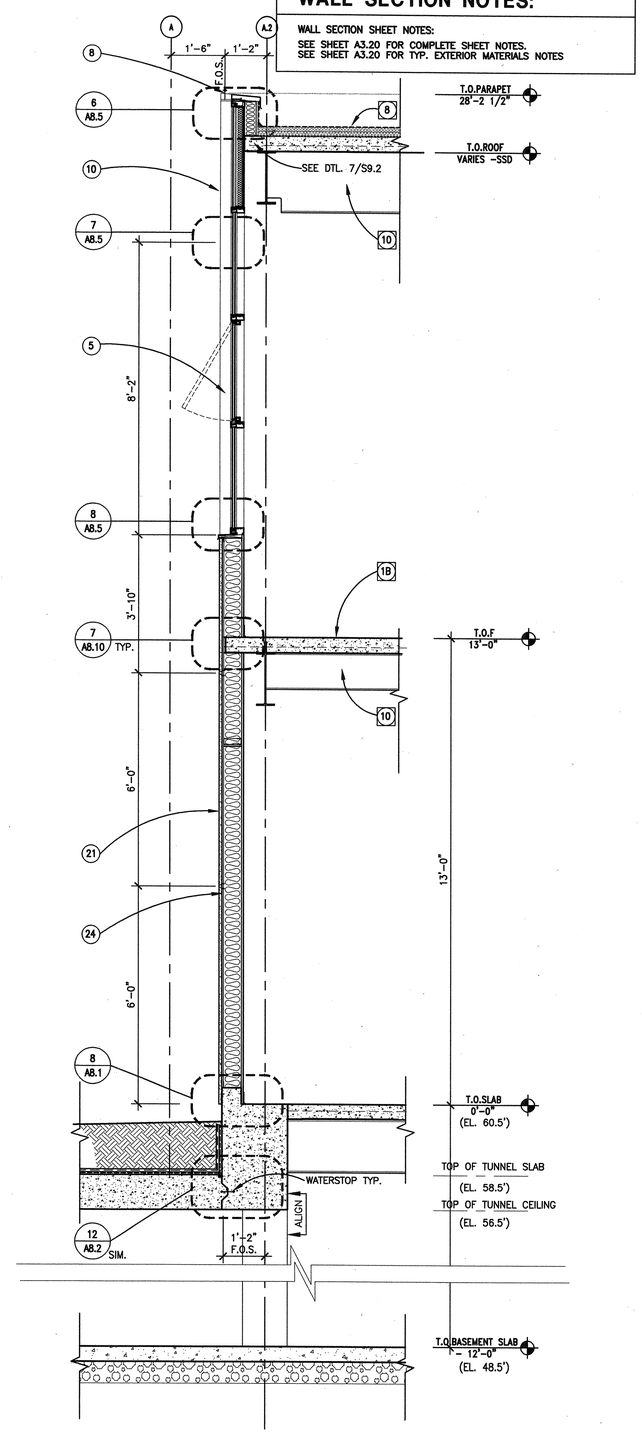

1 TYP. WALL SECTION @ STORE MANAGER OFFICE
1/2"=1'-0"
BWALSEC-1

BSA
Architects
A California Corporation
350 PACIFIC AVENUE
SAN FRANCISCO, CA 94111
415-781-1526

DIABLO VALLEY COLLEGE

DIABLO VALLEY COLLEGE NEW BOOKSTORE

321 GOLF CLUB RD.
PLEASANT HILL, CALIFORNIA

© 2003 BSA Architects
"All drawings and written material appearing herein constitute the original and unpublished work of the architect and the same may not be duplicated, used, or disclosed without the written consent of the architect."

DATE: 23 JULY, 2004

REVISIONS:

LICENSED ARCHITECT
JOHN ASHWORTH
No. C26747
REN. 1-31-05
STATE OF CALIFORNIA

BID SET

SHEET TITLE:
WALL SECTIONS

IDENTIFICATION STAMP
DIVISION OF THE STATE ARCHITECT
105925
APPL 01
AC LE FLS ED SS A1
DATE: 5-12-04 JUL 26 2004

BLDG. ID: 098
ID CODE: 312098-109.01-A

DRAWN BY: GL
CHECKED BY: JA
JOB NO: 0307

SHEET
A3.24

10/3/03 A03-24.DWG

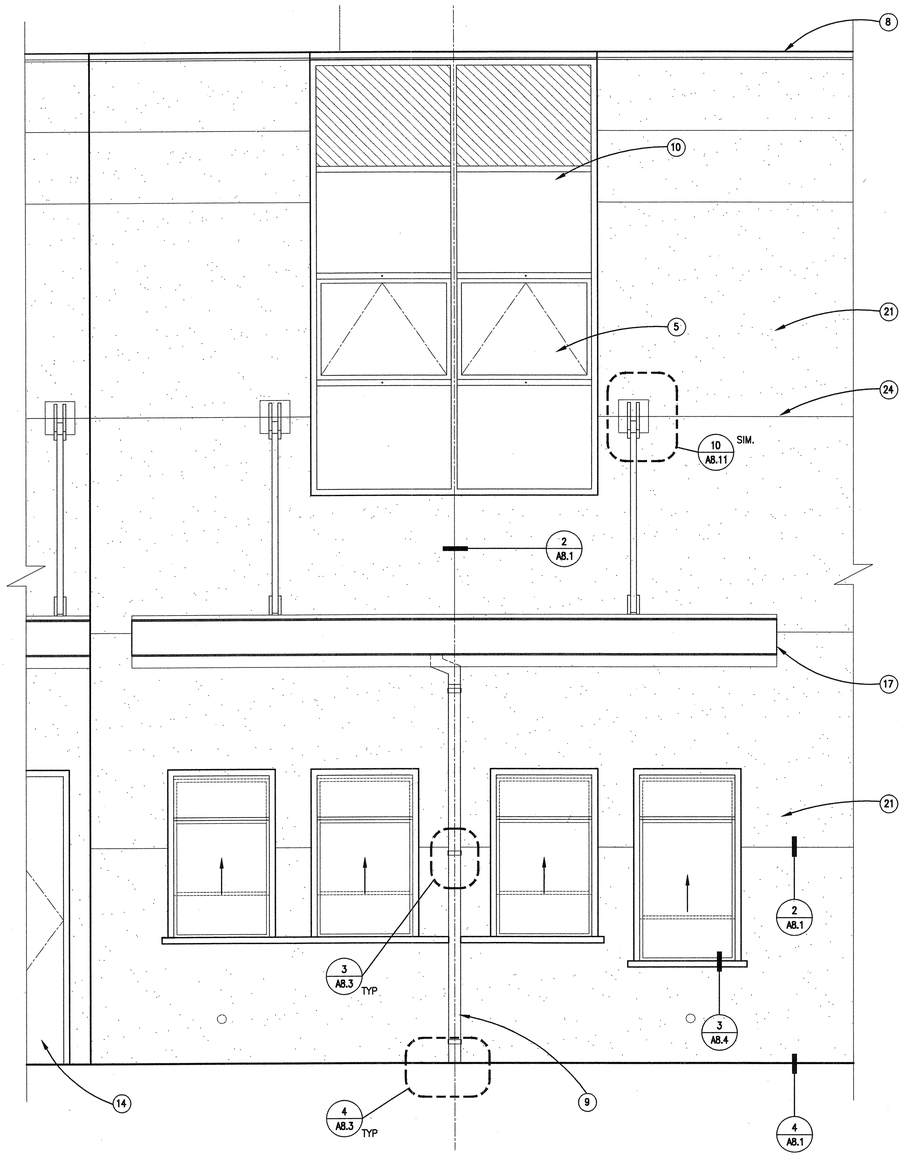

2 ENLARGED SOUTH ELEVATION
1/2"=1'-0"

BWALSEC-1

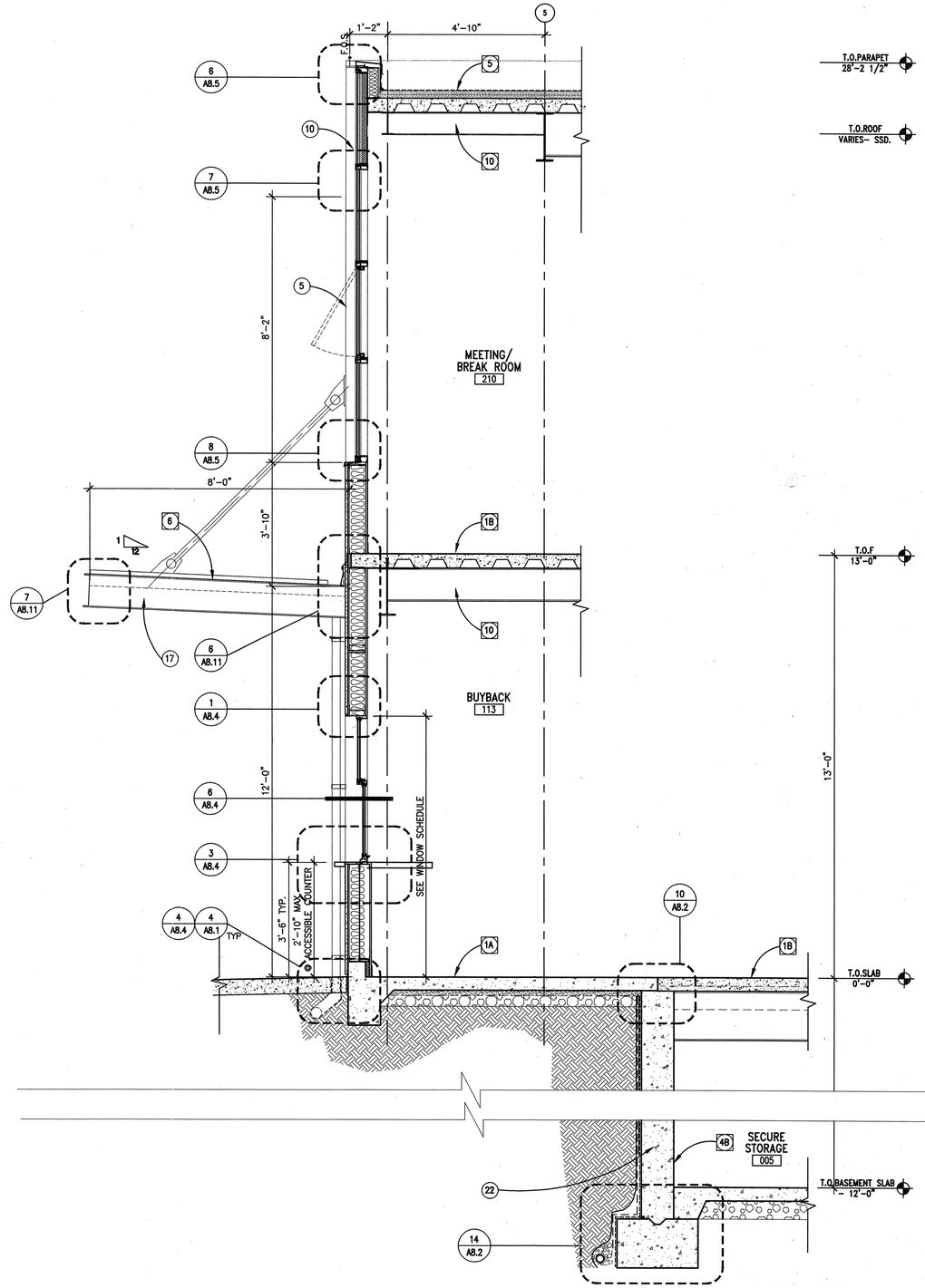

1 TYP. WALL SECTION @ MEETING ROOM
1/2"=1'-0"

BWALSEC-1

WALL SECTION NOTES:

WALL SECTION SHEET NOTES:
SEE SHEET A3.20 FOR COMPLETE SHEET NOTES.
SEE SHEET A3.20 FOR TYP. EXTERIOR MATERIALS NOTES

BSA
Architects
A California Corporation
350 PACIFIC AVENUE
SAN FRANCISCO, CA 94111
415-781-1526

DIABLO VALLEY COLLEGE

DIABLO VALLEY COLLEGE NEW BOOKSTORE

321 GOLF CLUB RD.
PLEASANT HILL, CALIFORNIA

© 2003 BSA Architects
"All drawings and written material appearing herein constitute the original and unpublished work of the architect and the same may not be duplicated, used, or disclosed without the written consent of the architect."

DATE: 23 JULY, 2004

REVISIONS:

LICENSED ARCHITECT
JOHN ASHWORTH
No. C26747
REN. 1-31-05
STATE OF CALIFORNIA

BID SET

SHEET TITLE:

WALL SECTIONS

IDENTIFICATION STAMP
DIVISION OF THE STATE ARCHITECT
105925
APPL 01
AC LE FLS ED SS A-1
DATE: 5-12-04 JUL 26 2004

BLDG. ID: 098
ID CODE: 312098-109.01-A

DRAWN BY: GL
CHECKED BY: JA
JOB NO: 0307

SHEET
A3.25

10/15/03 A03-25.DWG

WALL SECTION NOTES:

WALL SECTION SHEET NOTES:

SEE SHEET A3.20 FOR COMPLETE SHEET NOTES.
SEE SHEET A3.20 FOR TYP. EXTERIOR MATERIALS NOTES

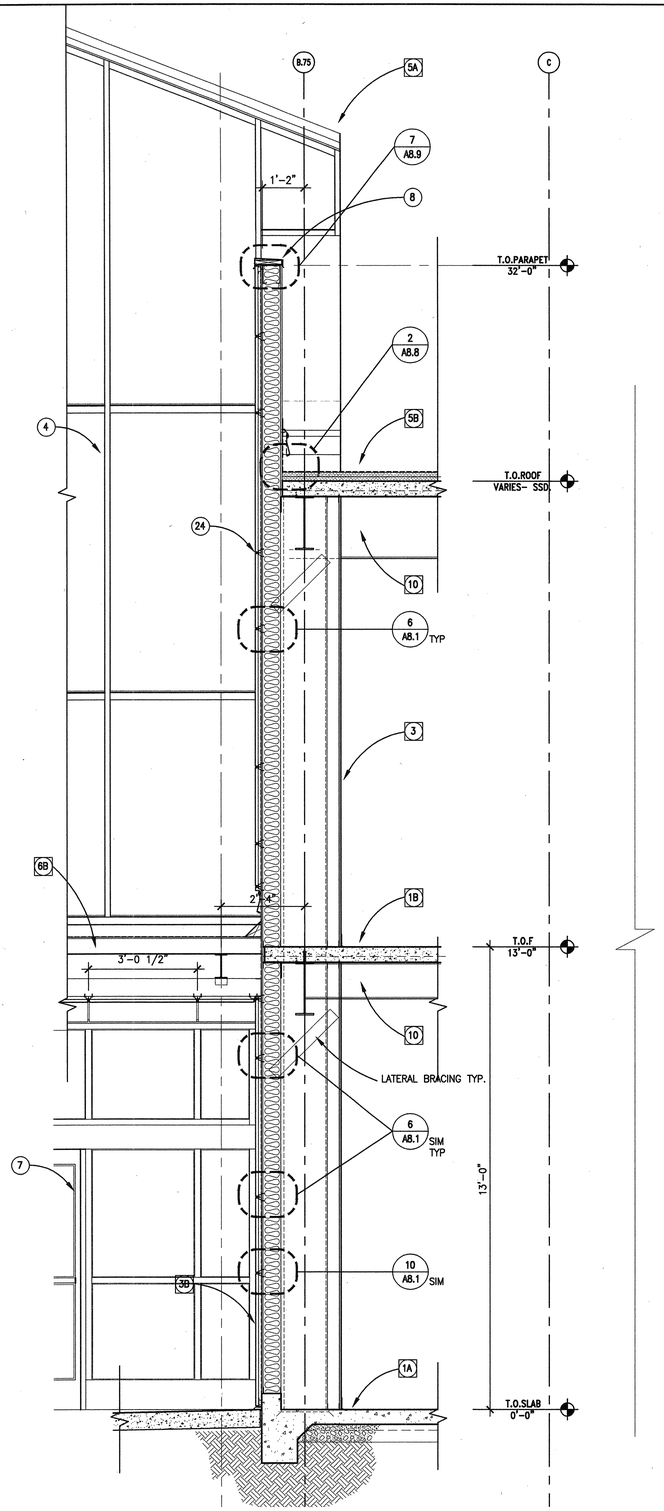

2 TYP. WALL SECTION @ ENTRY
1/2"=1'-0"

BWALSEC-1

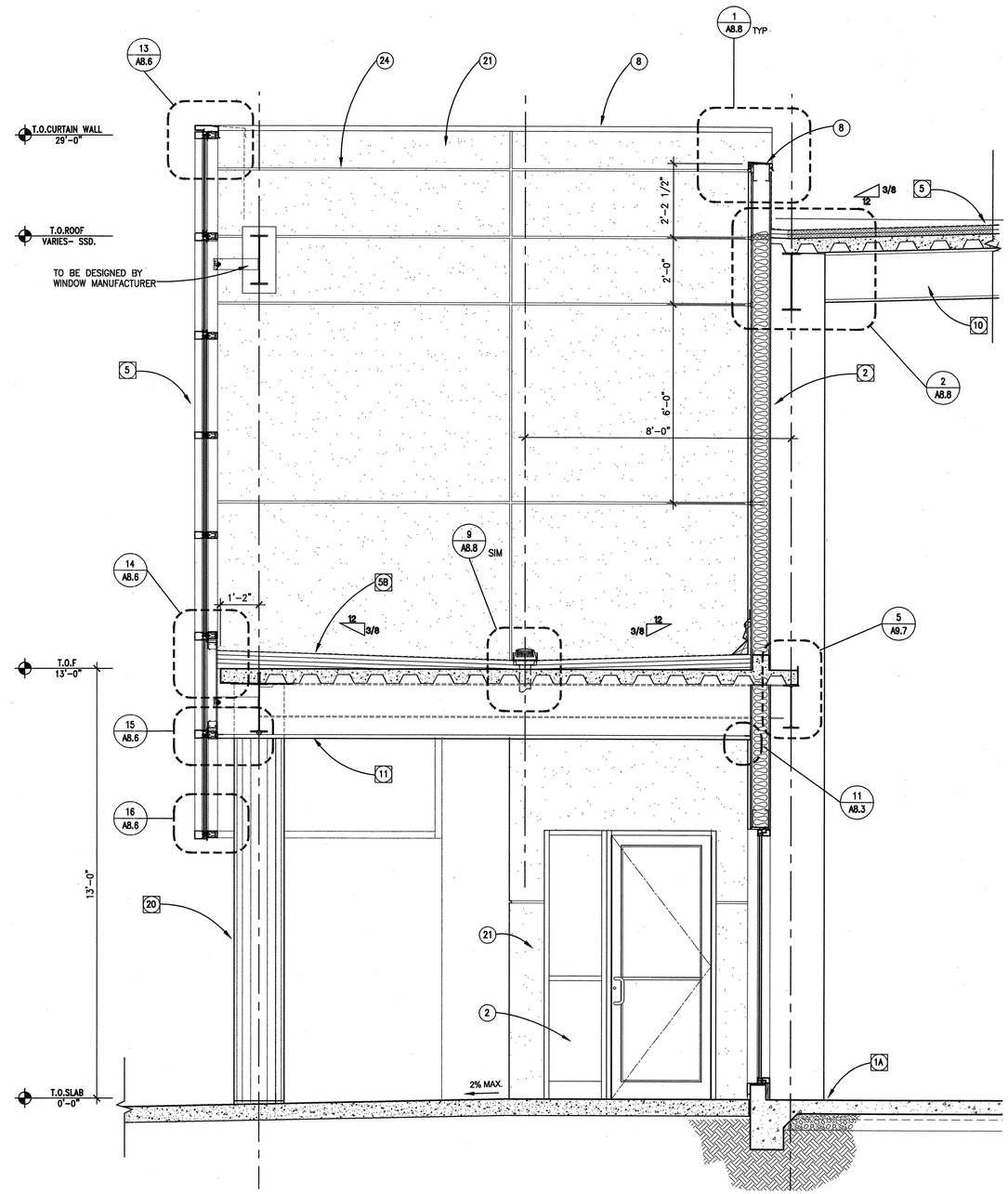

1 TYP. WALL SECTION @ WEST ENTRY
1/2"=1'-0"

BWALSEC-1

BSA Architects
A California Corporation
350 PACIFIC AVENUE
SAN FRANCISCO, CA 94111
415-781-1526

DIABLO VALLEY COLLEGE

DIABLO VALLEY COLLEGE NEW BOOKSTORE

321 GOLF CLUB RD.
PLEASANT HILL, CALIFORNIA

© 2003 BSA Architects
"All drawings and written material appearing herein constitute the original and unpublished work of the architect and the same may not be duplicated, used, or disclosed without the written consent of the architect."

DATE: 23 JULY, 2004

REVISIONS:

LICENSED ARCHITECT JOHN ASHWORTH C No. C26747 REN. 1-31-05 STATE OF CALIFORNIA

BID SET

SHEET TITLE:

WALL SECTIONS

IDENTIFICATION STAMP
DIVISION OF THE STATE ARCHITECT
105925
APPL 01
AC LE FLS ED SS AI
DATE: 5-12-04 JUL 26 2004

BLDG. ID: 098
ID CODE: 312098-109.01-A

DRAWN BY: GL
CHECKED BY: JA
JOB NO: 0307

SHEET
A3.26

10/16/03 A03-26.DWG

WALL SECTION NOTES:

WALL SECTION SHEET NOTES:

SEE SHEET A3.20 FOR COMPLETE SHEET NOTES.
SEE SHEET A3.20 FOR TYP. EXTERIOR MATERIALS NOTES

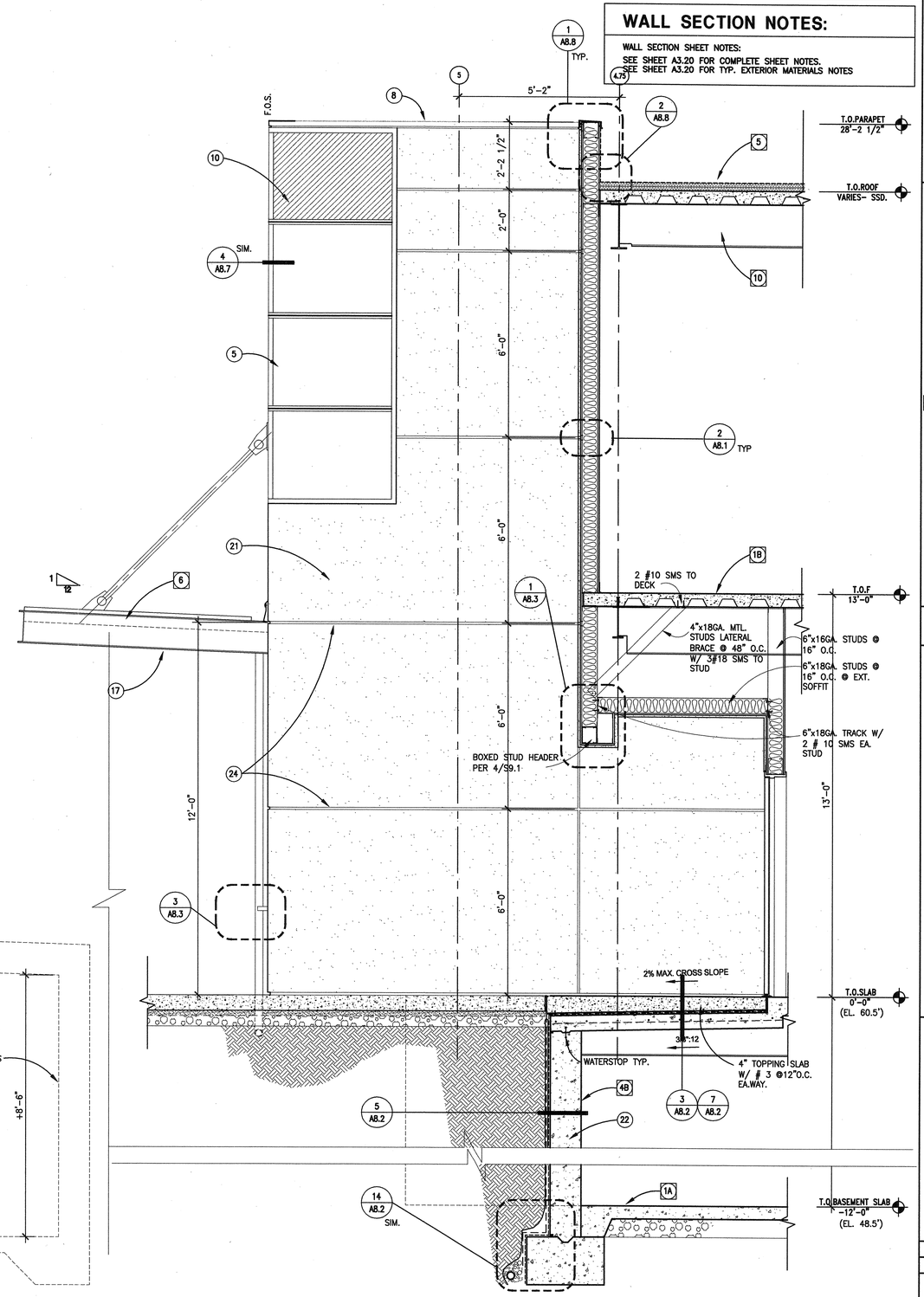

1 TYP. WALL SECTION @ SOUTH ENTRY
1/2"=1'-0"
BWALSEC-1

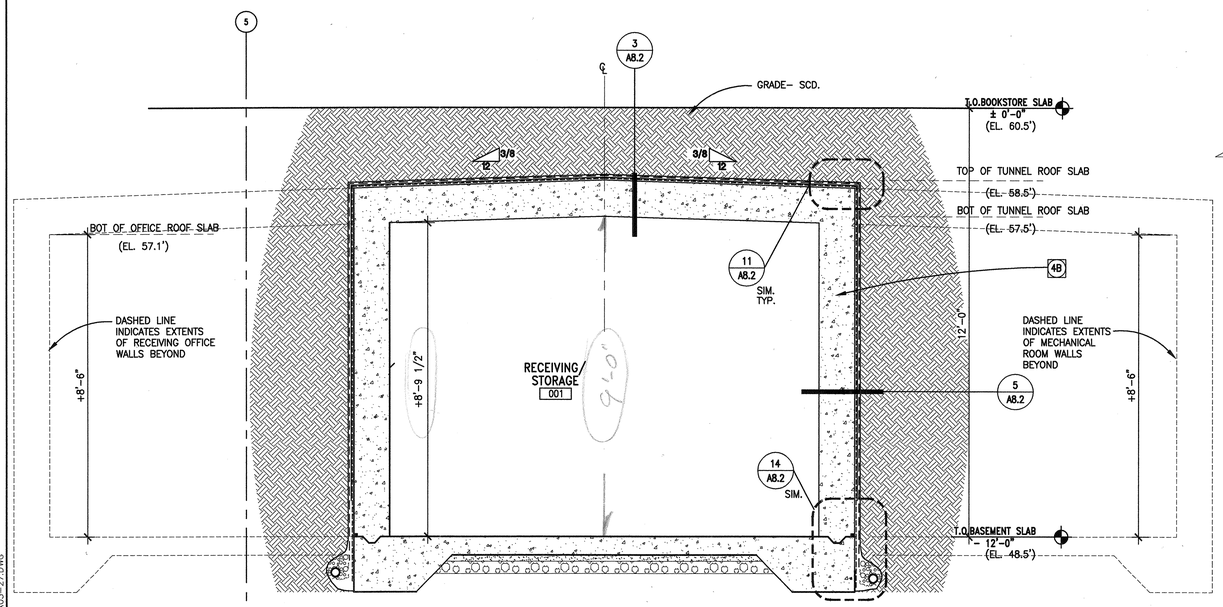

2 WALL SECTION @ RECEIVING/ STORAGE
1/2"=1'-0"
LWALSECT

BSA Architects
A California Corporation
350 PACIFIC AVENUE
SAN FRANCISCO, CA 94111
415-781-1526

DIABLO VALLEY COLLEGE

DIABLO VALLEY COLLEGE NEW BOOKSTORE

321 GOLF CLUB RD.
PLEASANT HILL, CALIFORNIA

© 2003 BSA Architects
"All drawings and written material appearing herein constitute the original and unpublished work of the architect and the same may not be duplicated, used, or disclosed without the written consent of the architect."

DATE: 23 JULY, 2004

REVISIONS:

LICENSED ARCHITECT JOHN ASHWORTH No. C26747 REN. 1-31-05 STATE OF CALIFORNIA

BID SET

SHEET TITLE:
WALL SECTIONS

IDENTIFICATION STAMP
DIVISION OF THE STATE ARCHITECT
105925
APPL 01
AC LE FLS EO SS AI
DATE: 5-12-04 JUL 26 2004

BLDG. ID: 098
ID CODE: 312098-109.01-A

DRAWN BY: GL
CHECKED BY: JA
JOB NO: 0307

SHEET A3.27

11/10/03 A03-27.DWG

WALL SECTION NOTES:

WALL SECTION SHEET NOTES:

SEE SHEET A3.20 FOR COMPLETE SHEET NOTES.
SEE SHEET A3.20 FOR TYP. EXTERIOR MATERIALS NOTES

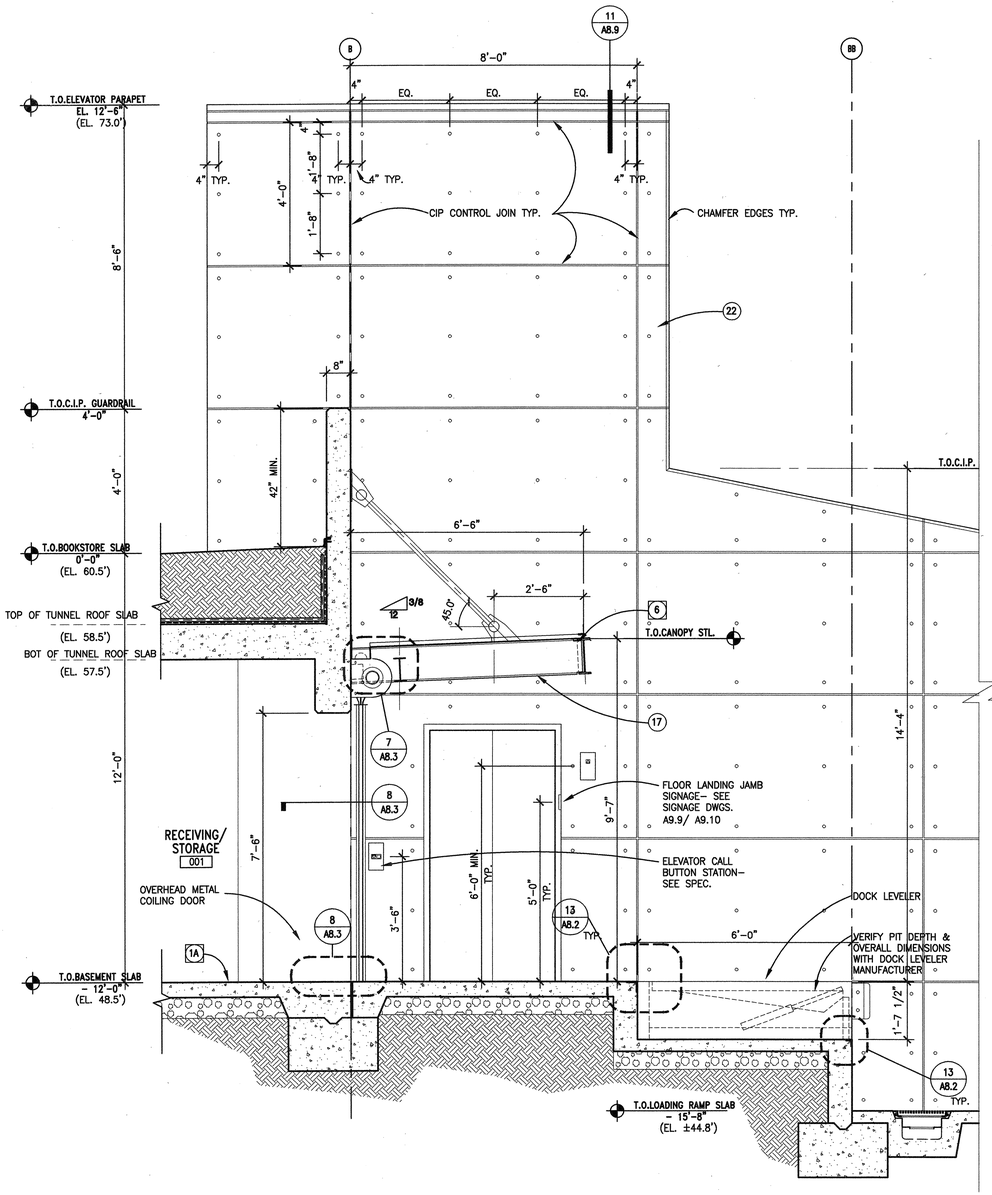

2 ENLARGED ELEVATION @ LOADING DOCK LIFT

1/2"=1'-0"

LWALSECT

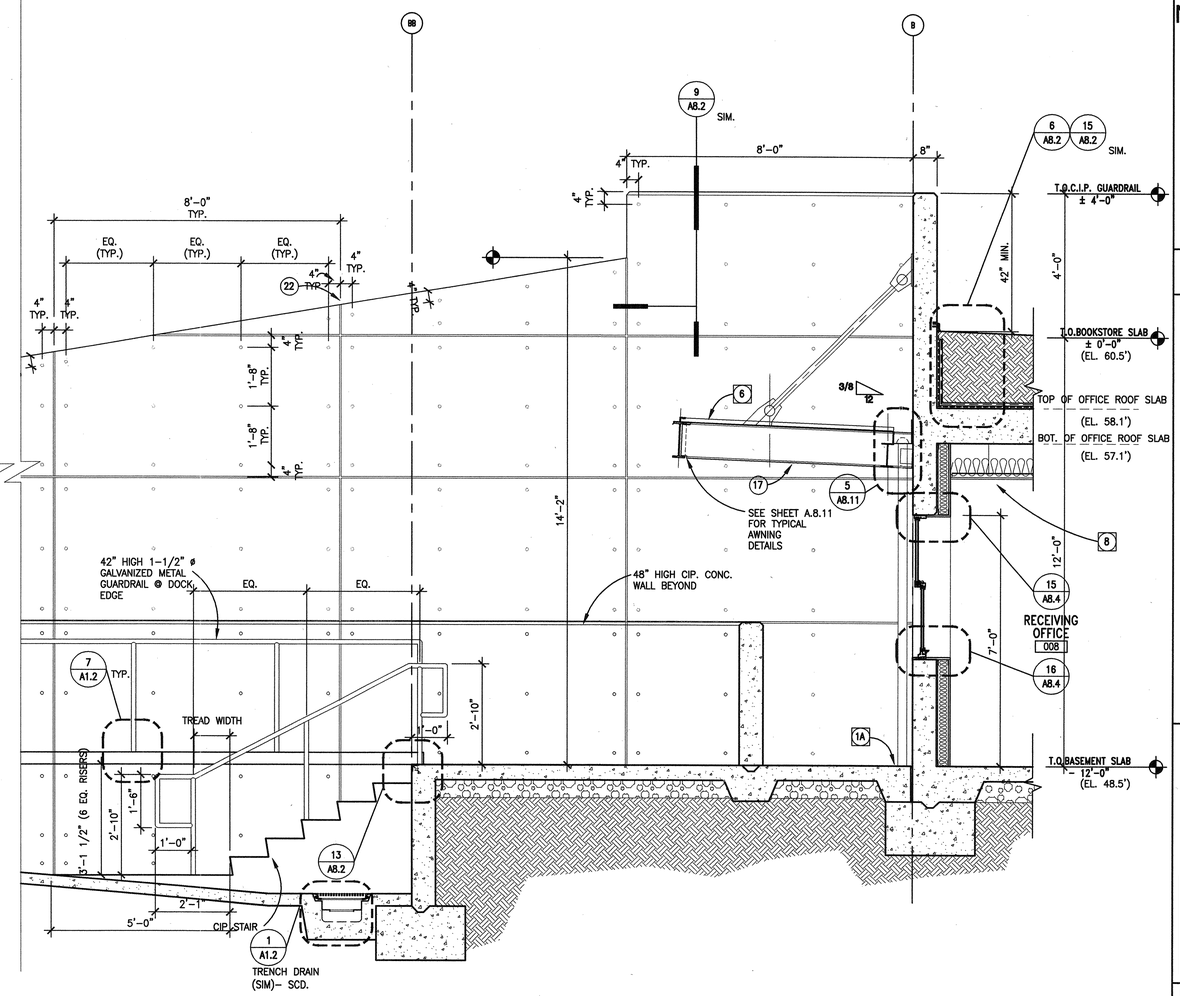

1 TYP. WALL SECTION @ LOADING DOCK

1/2"=1'-0"

LWALSECT

BSA Architects
A California Corporation
350 PACIFIC AVENUE
SAN FRANCISCO, CA 94111
415-781-1526

DIABLO VALLEY COLLEGE

DIABLO VALLEY COLLEGE NEW BOOKSTORE

321 GOLF CLUB RD.
PLEASANT HILL, CALIFORNIA

© 2003 BSA Architects
"All drawings and written material appearing herein constitute the original and unpublished work of the architect and the same may not be duplicated, used, or disclosed without the written consent of the architect."

DATE: 23 JULY, 2004

REVISIONS:

LICENSED ARCHITECT JOHN ASHWORTH No. C26747 REN. 1-31-05 STATE OF CALIFORNIA

BID SET

SHEET TITLE:

WALL SECTIONS

IDENTIFICATION STAMP
DIVISION OF THE STATE ARCHITECT
105925
APPL 01
AC LE FLS ED SS A1
DATE: 5-12-04 JUL 26 2004

BLDG. ID: 098
ID CODE: 312098-109.01-A

DRAWN BY: GL
CHECKED BY: JA
JOB NO: 0307

SHEET A3.28

11/14/03 A03-28.DWG

WALL SECTION NOTES:

WALL SECTION SHEET NOTES:
SEE SHEET A3.20 FOR COMPLETE SHEET NOTES.
SEE SHEET A3.20 FOR TYP. EXTERIOR MATERIALS NOTES

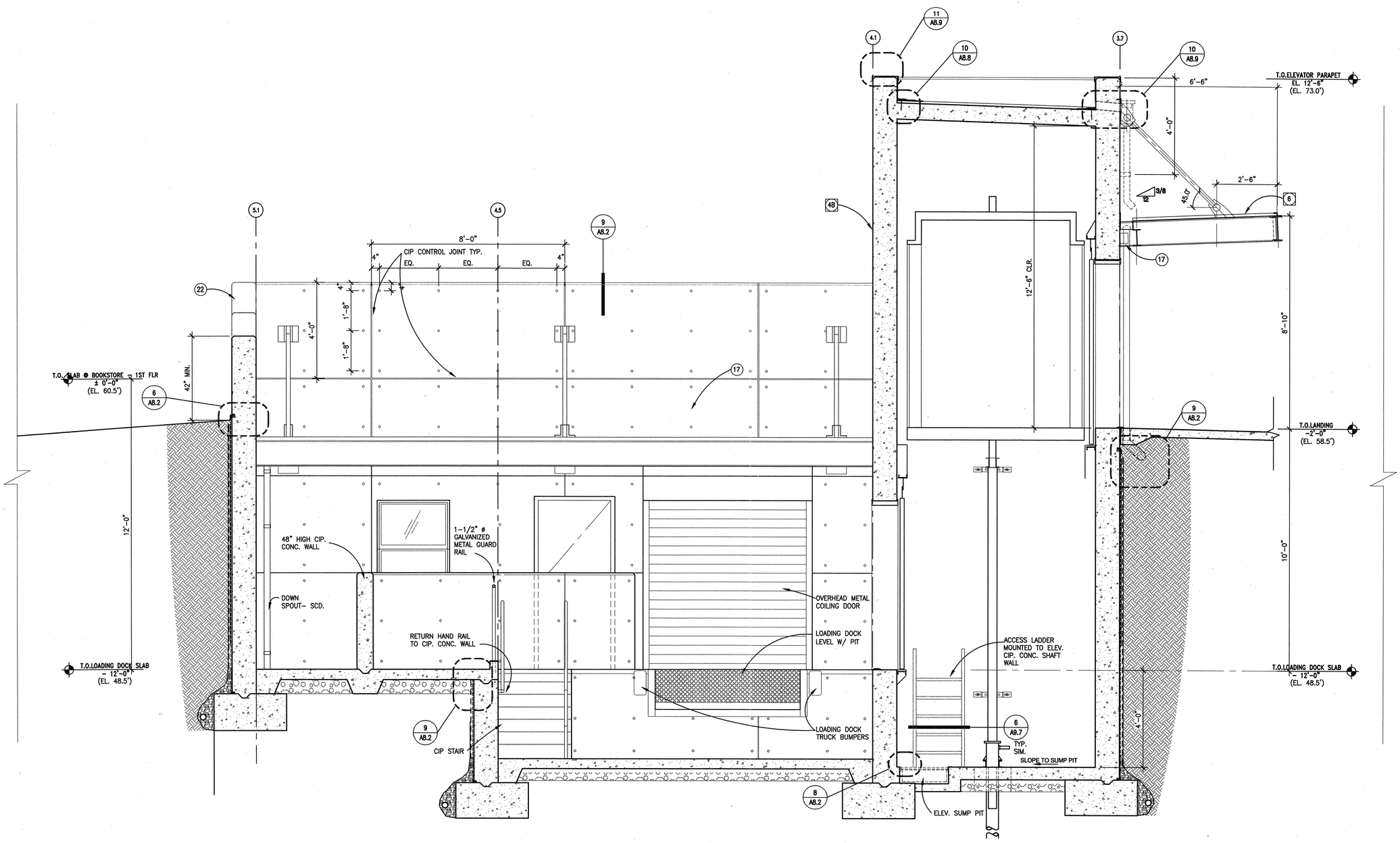

1 **TYP. WALL SECTION @ LOADING DOCK**
1/2"=1'-0"
LWALSECT

11/14/03 A03-29.DWG

BSA Architects
A California Corporation
350 PACIFIC AVENUE
SAN FRANCISCO, CA 94111
415-781-1526

DIABLO VALLEY COLLEGE

DIABLO VALLEY COLLEGE NEW BOOKSTORE

321 GOLF CLUB RD.
PLEASANT HILL, CALIFORNIA

© 2003 BSA Architects
"All drawings and written material appearing herein constitute the original and unpublished work of the architect and the same may not be duplicated, used, or disclosed without the written consent of the architect."

DATE: 23 JULY, 2004

REVISIONS:

LICENSED ARCHITECT JOHN ASHWORTH No. C26747 REN. 1-31-05 STATE OF CALIFORNIA

BID SET

SHEET TITLE:
WALL SECTIONS

IDENTIFICATION STAMP
DIVISION OF THE STATE ARCHITECT
APPL 01 105925
AC LE FLS ED SS A1
DATE: 5-12-04 JUL 26 2004

BLDG. ID: 098
ID CODE: 312098-109.01-A

DRAWN BY: GL
CHECKED BY: JA
JOB NO: 0307

SHEET
A3.29

WALL SECTION NOTES:

WALL SECTION SHEET NOTES:
SEE SHEET A3.20 FOR COMPLETE SHEET NOTES.
SEE SHEET A3.20 FOR TYP. EXTERIOR MATERIALS NOTES

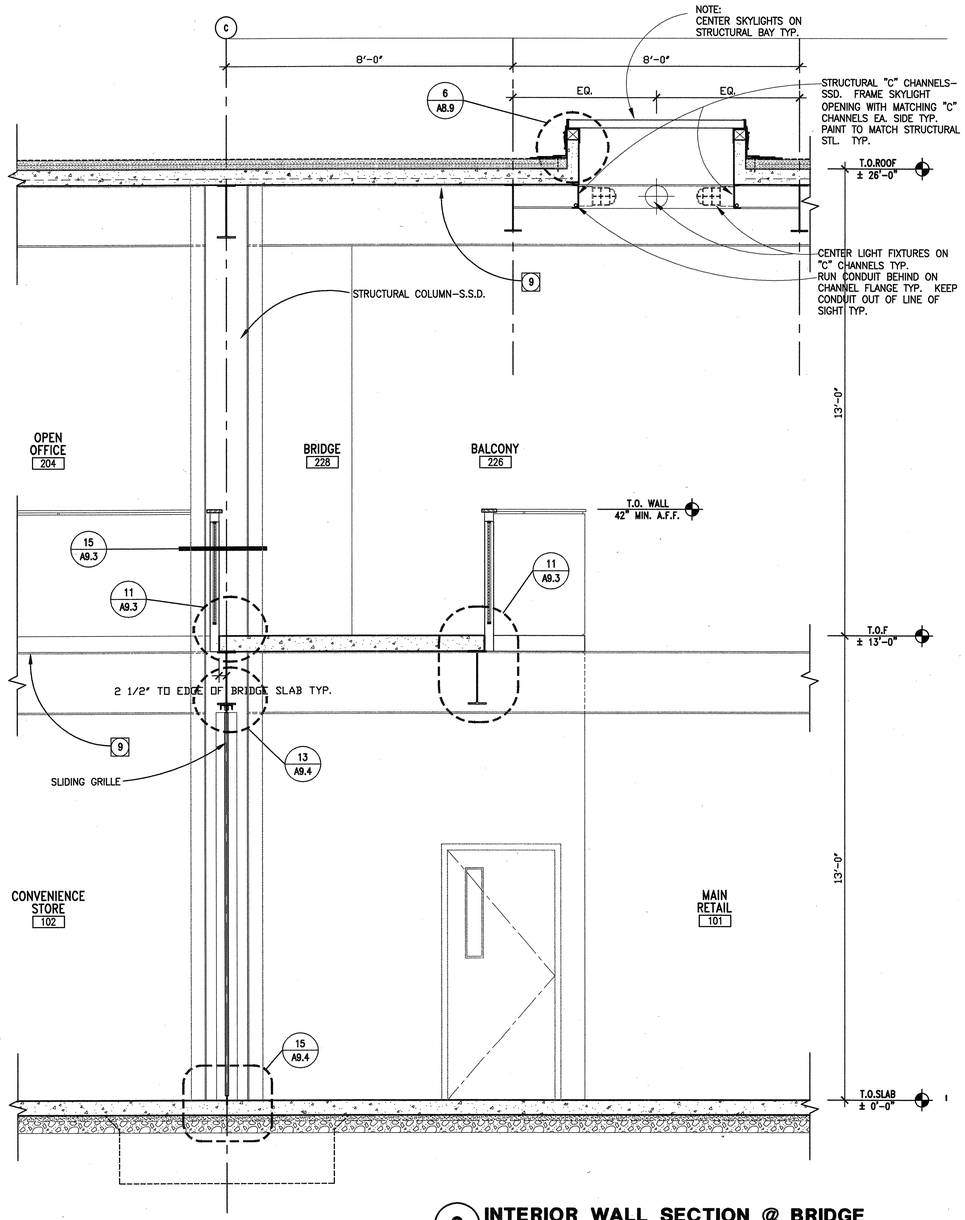

2 INTERIOR WALL SECTION @ BRIDGE
1/2"=1'-0"
iwalsec1

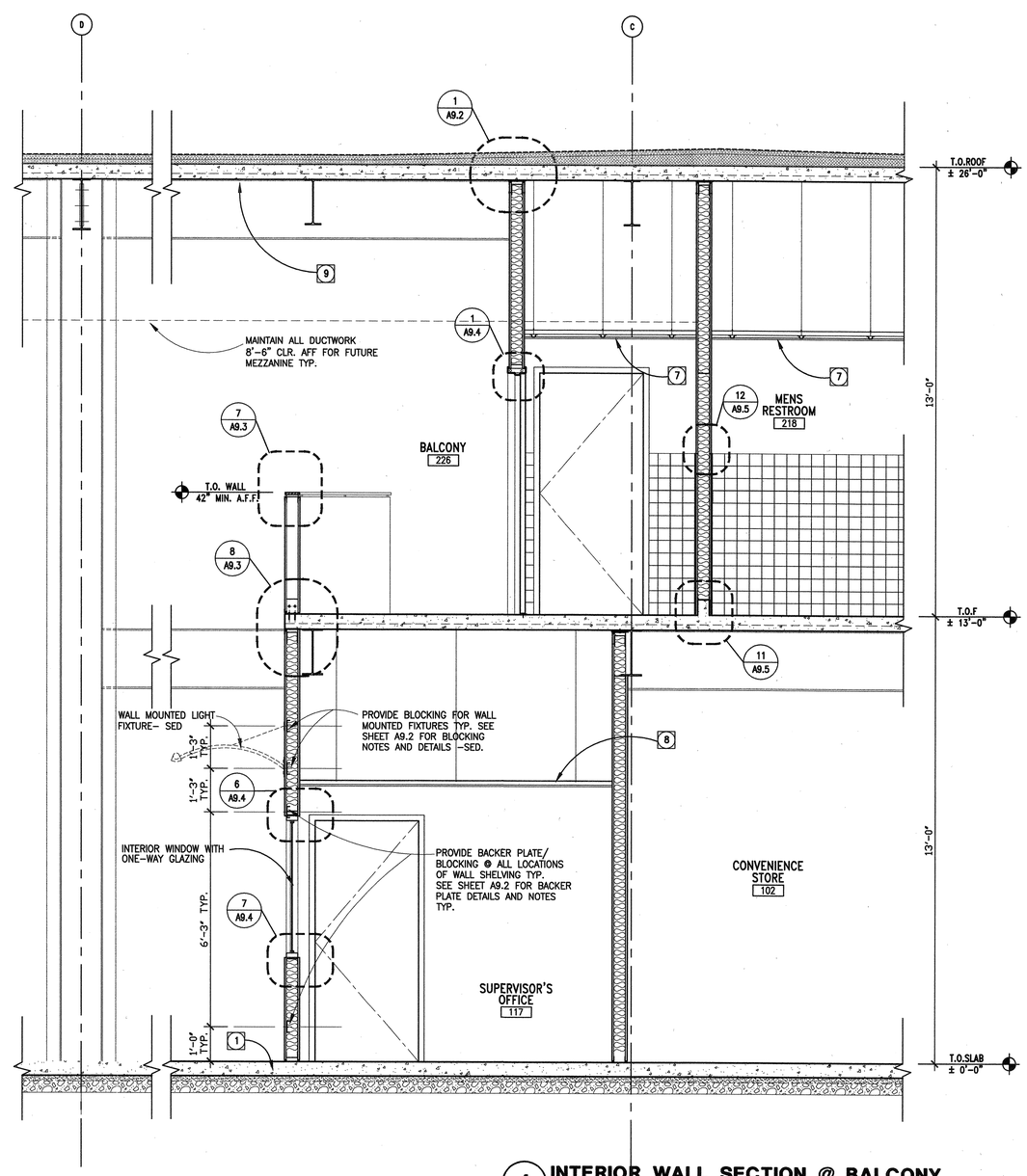

1 INTERIOR WALL SECTION @ BALCONY
1/2"=1'-0"
iwalsec1

BSA
Architects
A California Corporation
350 PACIFIC AVENUE
SAN FRANCISCO, CA 94111
415-781-1526

DIABLO VALLEY COLLEGE

DIABLO VALLEY COLLEGE NEW BOOKSTORE

321 GOLF CLUB RD.
PLEASANT HILL, CALIFORNIA

© 2003 BSA Architects
"All drawings and written material appearing herein constitute the original and unpublished work of the architect and the same may not be duplicated, used, or disclosed without the written consent of the architect."

DATE: 23 JULY, 2004

REVISIONS:

LICENSED ARCHITECT
JOHN ASHWORTH
No. C26747
REN. 1-31-05
STATE OF CALIFORNIA

BID SET

SHEET TITLE:
INTERIOR WALL SECTIONS

IDENTIFICATION STAMP
DIVISION OF THE STATE ARCHITECT
105925
APPL 01
AC LE FLS ED SS 41
DATE: 5-12-04 JUL 26 2004

BLDG. ID: 098
ID CODE: 312098-109.01-A

DRAWN BY: JH
CHECKED BY: JA
JOB NO: 0307

SHEET
A3.30

10/3/03 A03-30.DWG

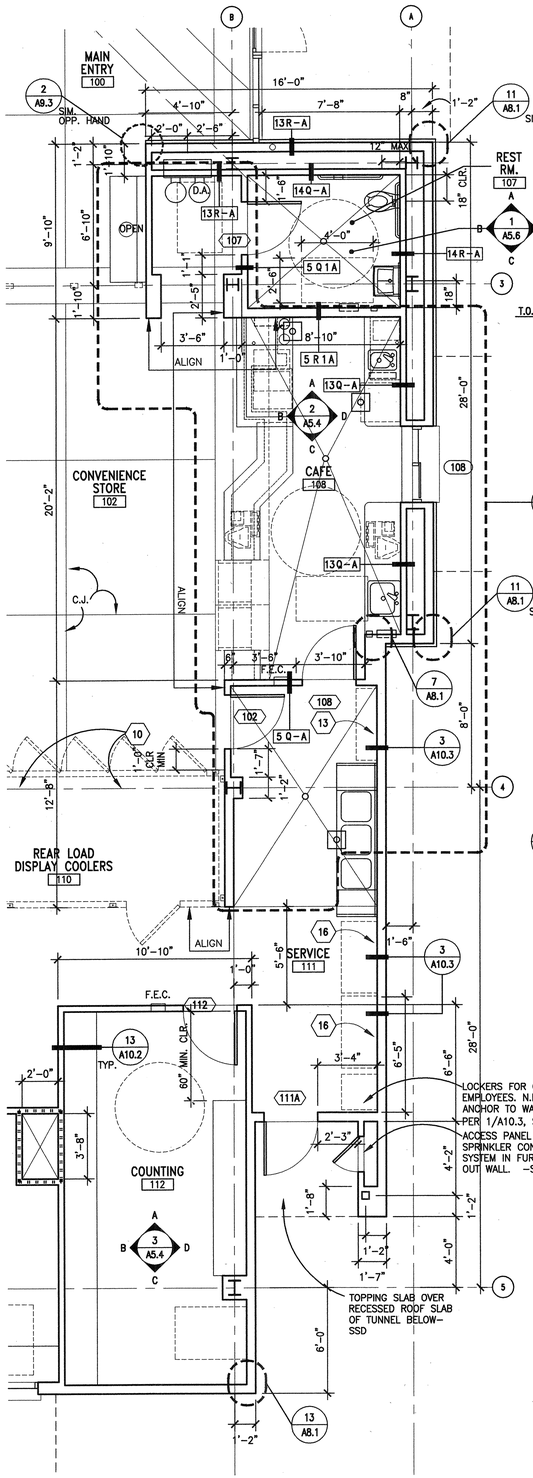

3 ENLARGED FIRST FLR. RESTROOM PLAN
1/4"=1'-0"
PLAN-2

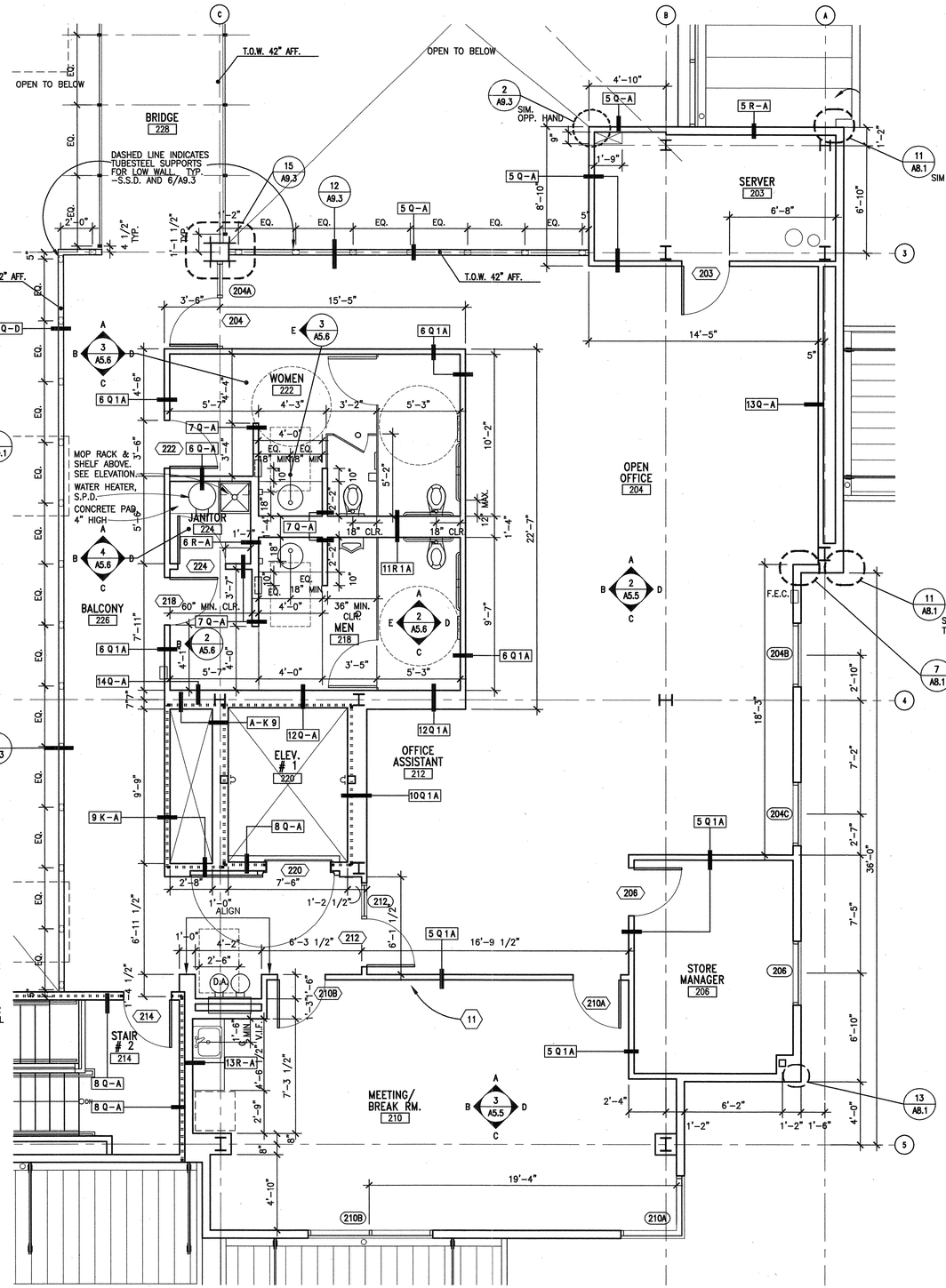

2 ENLARGED SECOND FLR. RESTROOM & CATWALK PLAN
1/4"=1'-0"
PLAN-2

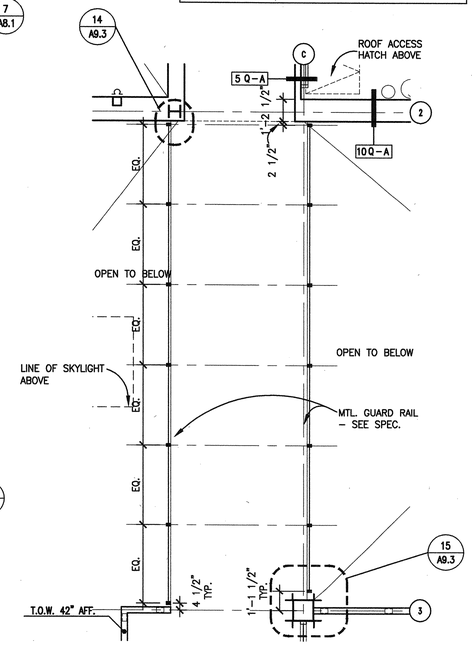

1 ENLARGED CATWALK PLAN
1/4"=1'-0"
PLAN-2

TRUE NORTH

0 1' 4' 8' 12'

PLAN LEGEND

- UNIT — ROOM NAME
- 100 — ROOM NUMBER
- INTERNATIONAL SYMBOL OF ACCESSIBILITY
- 1 A-H — PARTITION TYPES – SEE A9.1
- 100 — DOOR NUMBER – SEE SCHEDULE: A11.1
- 100 — WINDOW NUMBER – SEE SCHEDULE: A11.2/A11.3
- 100 — LOUVER NUMBER – SEE SCHEDULE: A11.3
- 100 — TOILET ACCESSORY SYMBOL –SEE SCHED.: A5.6
- 100 — EQUIPMENT SYMBOL –SEE SCHEDULE: A11.5
- CPT — FLOOR FINISH, SEE SCHEDULE A11.4, A11.5
- C.I.P. PARTITION – SSD
- 1 HR. RATED WALL ASSEMBLY – SEE 8/A9.1
- F.E.C. — FIRE EXTINGUISHER CABINET, DIMENSIONED TO CENTERLINE REF. 4/A9.2
- DS — DOWN SPOUT FOR TYP. MOUNTING HEIGHT SEE 2/A3.20, 4/A8.3

GENERAL NOTES

1. ALL DIMENSIONS ARE FROM GRIDLINE, FACE OF FRAMING OR FACE OF CONC., U.O.N.
2. SEE SHEET A9.1 FOR PARTITION TYPES AND DETAILS.
3. SEE SHEET A11.1, A11.2 & A11.3 FOR DOOR AND WINDOW SCHEDULES.
4. SEE ENLARGED PLANS SHEETS A4.1 FOR ADDITIONAL DIMENSIONS, PARTITION TYPE SYMBOLS AND DOOR & WINDOW KEYS
5. SEE SHEETS A2.4 & A2.5 FOR FINISH PLAN
6. FOR STRUCTURAL STL. LOCATIONS & SIZES @ STAIR LANDINGS & STRINGERS –SSD. TYP.
7. SEE SHEET A5.6 & A11.5 FOR TOILET ACCESSORIES LIST & EQUIPMENT SCHEDULES.
8. SEE SHEET A8.1 FOR EXTERIOR WALL ASSEMBLY TYPES AND DETAILS.
9. REFER TO STRUCTURAL DRAWINGS FOR STEEL LOCATIONS AND SIZES AT LANDINGS AND STRINGERS

BSA Architects
A California Corporation
350 PACIFIC AVENUE
SAN FRANCISCO, CA 94111
415-781-1526

DIABLO VALLEY COLLEGE

DIABLO VALLEY COLLEGE NEW BOOKSTORE

321 GOLF CLUB RD.
PLEASANT HILL, CALIFORNIA

© 2003 BSA Architects
"All drawings and written material appearing herein constitute the original and unpublished work of the architect and the same may not be duplicated, used, or disclosed without the written consent of the architect."

DATE: 23 JULY, 2004

REVISIONS:

LICENSED ARCHITECT TODD ASHWORTH No. C26747 REN. 1-31-05 STATE OF CALIFORNIA

BID SET

SHEET TITLE:

ENLARGED FLOOR PLANS

IDENTIFICATION STAMP
DIVISION OF THE STATE ARCHITECT
105925
APPL 01
AC LE FLS EO SS 41
DATE: 5-12-04 JUL 2 6 2004

BLDG. ID: 098
ID CODE: 312098-109.01-A

DRAWN BY: GL
CHECKED BY: JA
JOB NO: 0307

SHEET A4.1

8/11/03 A04-01.DWG

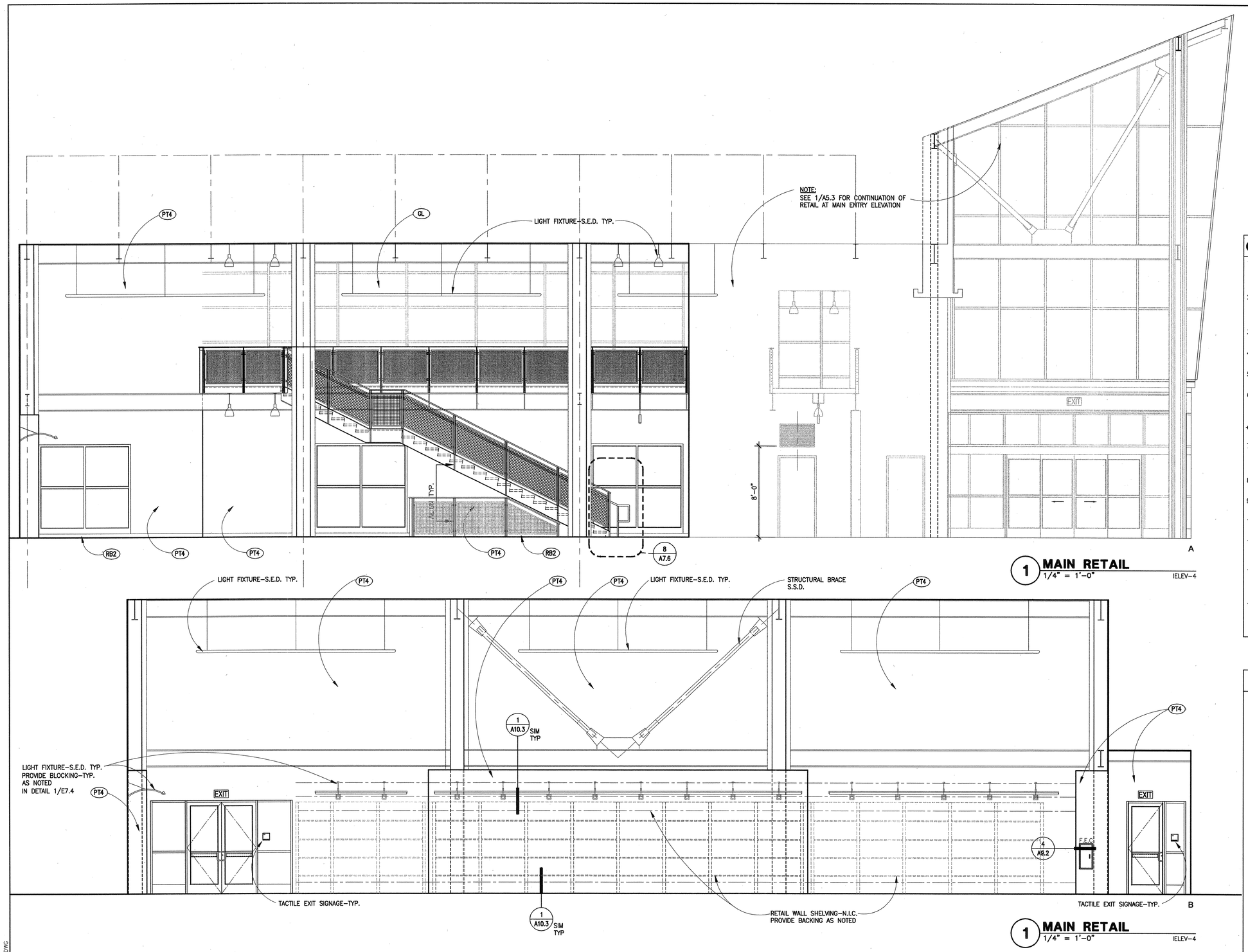

GENERAL NOTES

1. ABBREVIATIONS AT RIGHT SIDE OF DRAWING TITLE INDICATE A COMPUTER DRAWING FILE NAME AND HAS NOTHING TO DO WITH CONSTRUCTION.
2. ALL INTERIOR, EXPOSED STRUCTURAL STEEL IN ADDITION TO ALL VERTICAL POSTS, HANDRAILS, AND MESH PANELS AT RAILINGS TO BE PAINTED "PT7" U.O.N.
3. ALL DIMENSIONS IN ELEVATION ARE FROM FACE OF FINISH, U.O.N.
4. REFER TO FINISH SCHEDULE A11.5 FOR ALL MATERIAL DESIGNATIONS.
5. CONFIRM ALL TOILET ACCESSORY MOUNTING HEIGHTS WITH 5/A5.6
6. PROVIDE 12" WIDE 18 GA. FLAT STOCK GSM FOR BACKING/WALL ANCHORAGE AT 93" A.F.F. TYP. U.O.N. WHERE INDICATED BY DASHED LINE AS FOLLOWS:
7. FOR RESTROOMS PROVIDE BLOCKING FOR MOUNTING OF TOILET ACCESSORIES WHERE APPLICABLE. SEE DETAIL 1/A9.3 AS REFERENCE.
8. FOR EQUIPMENT LIST AND DESIGNATION SEE EQUIPMENT SCHEDULE ON A11.5
9. SEAL ALL EXPOSED EDGES OF MDF AT WET LOCATIONS – TYP.
10. REFER TO ENLARGED PLANS FOR SPACING OF ALL VERTICAL POSTS AT RAILINGS.
11. FOR FIRE EXTINGUISHER CABINET MOUNTING HEIGHT, SEE ACCESSORY MOUNTING HEIGHTS–5/A5.6
12. FOR ALL LIGHTING FIXTURE LOCATIONS, MOUNTING HEIGHTS, AND TYPES–SEE ELECTRICAL DRAWINGS AND REFLECTED CEILING PLANS
13. CO–ORDINATE EXACT LOCATIONS OF RUBBER BASE IN RETAIL AND CONVENIENCE WITH STORE PLAN RETAIL LAYOUT WALL SHELVING AND CASEWORK.

TYP. MTRLS. LEGEND

- AC ACOUSTIC CEILING TILE
- CT CERAMIC TILE
- CPT CARPET
- CS CONCRETE FLOOR
- GB GYPSUM BOARD
- SV SHEET VINYL FLOORING
- VCT VINYL COMPOSITION TILE
- MF METAL CLADDING
- GL GLASS
- FRP FIBERGLASS REINFORCED PLASTIC
- MR MIRROR
- PL PLASTIC LAMINATE
- PT PAINT
- RB RESILIENT BASE
- SS SOLID SURFACE

BSA
Architects
A California Corporation
350 PACIFIC AVENUE
SAN FRANCISCO, CA 94111
415–781–1526

DIABLO VALLEY COLLEGE

DIABLO VALLEY COLLEGE NEW BOOKSTORE

321 GOLF CLUB RD.
PLEASANT HILL, CALIFORNIA

© 2003 BSA Architects
"All drawings and written material appearing herein constitute the original and unpublished work of the architect and the same may not be duplicated, used, or disclosed without the written consent of the architect."

DATE: 23 JULY, 2004

REVISIONS:

LICENSED ARCHITECT
JOHN ASHWORTH
No. C26747
REN. 1-31-05
STATE OF CALIFORNIA

BID SET

SHEET TITLE:

INTERIOR ELEVATIONS

IDENTIFICATION STAMP
DIVISION OF THE STATE ARCHITECT
105925
APPL 01
AC LE FLS EO SS AI
DATE: 5-12-04 JUL 26 2004

BLDG. ID: 098
ID CODE: 312098–109.01–A

DRAWN BY: JH
CHECKED BY: JA
JOB NO: 0307

SHEET
A5.1

09/02/03 A05-01.DWG

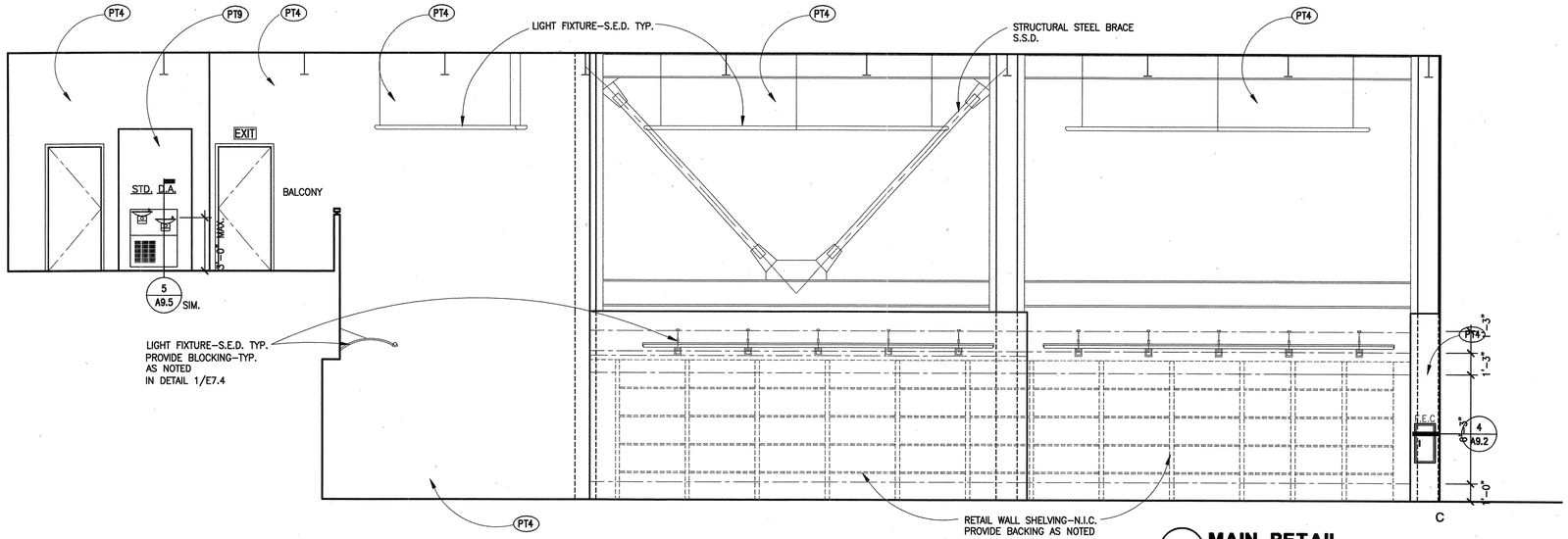

1 **MAIN RETAIL**
1/4" = 1'-0"
IELEV-4

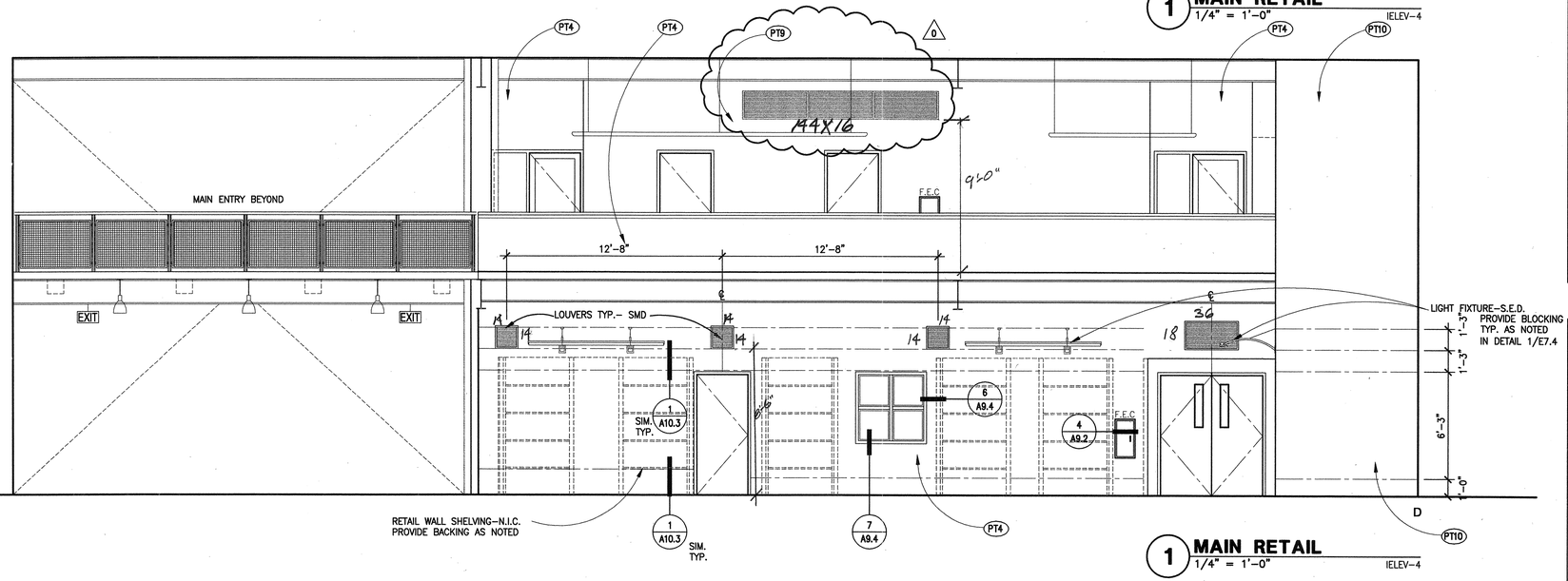

1 **MAIN RETAIL**
1/4" = 1'-0"
IELEV-4

GENERAL NOTES

1. ABBREVIATIONS AT RIGHT SIDE OF DRAWING TITLE INDICATE A COMPUTER DRAWING FILE NAME AND HAS NOTHING TO DO WITH CONSTRUCTION.
2. ALL INTERIOR, EXPOSED STRUCTURAL STEEL IN ADDITION TO ALL VERTICAL POSTS, HANDRAILS, AND MESH PANELS AT RAILINGS TO BE PAINTED "PT7" U.O.N.
3. ALL DIMENSIONS IN ELEVATION ARE FROM FACE OF FINISH, U.O.N.
4. REFER TO FINISH SCHEDULE A11.5 FOR ALL MATERIAL DESIGNATIONS.
5. CONFIRM ALL TOILET ACCESSORY MOUNTING HEIGHTS WITH 5/A5.6
6. PROVIDE 12" WIDE 18 GA. FLAT STOCK GSM FOR BACKING/WALL ANCHORAGE AT 93" A.F.F. TYP. U.O.N. WHERE INDICATED BY DASHED LINE AS FOLLOWS:
   ~~◆ 8"AFF~~
7. FOR RESTROOMS PROVIDE BLOCKING FOR MOUNTING OF TOILET ACCESSORIES WHERE APPLICABLE. SEE DETAIL 1/A9.3 AS REFERENCE.
8. FOR EQUIPMENT LIST AND DESIGNATION SEE EQUIPMENT SCHEDULE ON A11.5
9. SEAL ALL EXPOSED EDGES OF MDF AT WET LOCATIONS – TYP.
10. REFER TO ENLARGED PLANS FOR SPACING OF ALL VERTICAL POSTS AT RAILINGS.
11. FOR FIRE EXTINGUISHER CABINET MOUNTING HEIGHT, SEE ACCESSORY MOUNTING HEIGHTS–5/A5.6
12. FOR ALL LIGHTING FIXTURE LOCATIONS, MOUNTING HEIGHTS, AND TYPES–SEE ELECTRICAL DRAWINGS AND REFLECTED CEILING PLANS
13. CO–ORDINATE EXACT LOCATIONS OF RUBBER BASE IN RETAIL AND CONVENIENCE WITH STORE PLAN RETAIL LAYOUT WALL SHELVING AND CASEWORK.

TYP. MTRLS. LEGEND

- AC ACOUSTIC CEILING TILE
- CT CERAMIC TILE
- CPT CARPET
- CS CONCRETE FLOOR
- GB GYPSUM BOARD
- SV SHEET VINYL FLOORING
- VCT VINYL COMPOSITION TITLE
- MF METAL CLADDING
- GL GLASS
- FRP FIBERGLASS REINFORCED PLASTIC
- MR MIRROR
- PL PLASTIC LAMINATE
- PT PAINT
- RB RESILIENT BASE
- SS SOLID SURFACE

BSA Architects
A California Corporation
350 PACIFIC AVENUE
SAN FRANCISCO, CA 94111
415–781–1526

DIABLO VALLEY COLLEGE

DIABLO VALLEY COLLEGE NEW BOOKSTORE

321 GOLF CLUB RD.
PLEASANT HILL, CALIFORNIA

© 2003 BSA Architects
"All drawings and written material appearing herein constitute the original and unpublished work of the architect and the same may not be duplicated, used, or disclosed without the written consent of the architect."

DATE: 23 JULY, 2004

REVISIONS:
0 REVISIONS– 23 JULY, 2004

LICENSED ARCHITECT JOHN ASHWORTH No. C26747 REN. 1–31–05 STATE OF CALIFORNIA

BID SET

SHEET TITLE:
INTERIOR ELEVATIONS

IDENTIFICATION STAMP
DIVISION OF THE STATE ARCHITECT
105925
APPL 01
AC LE FLS ED SS AL
DATE: 5-12-04 JUL 26 2004

BLDG. ID: 098
ID CODE: 312098–109.01–A

DRAWN BY: JH
CHECKED BY: JA
JOB NO: 0307

SHEET
A5.2

09/02/03 A05-02.DWG

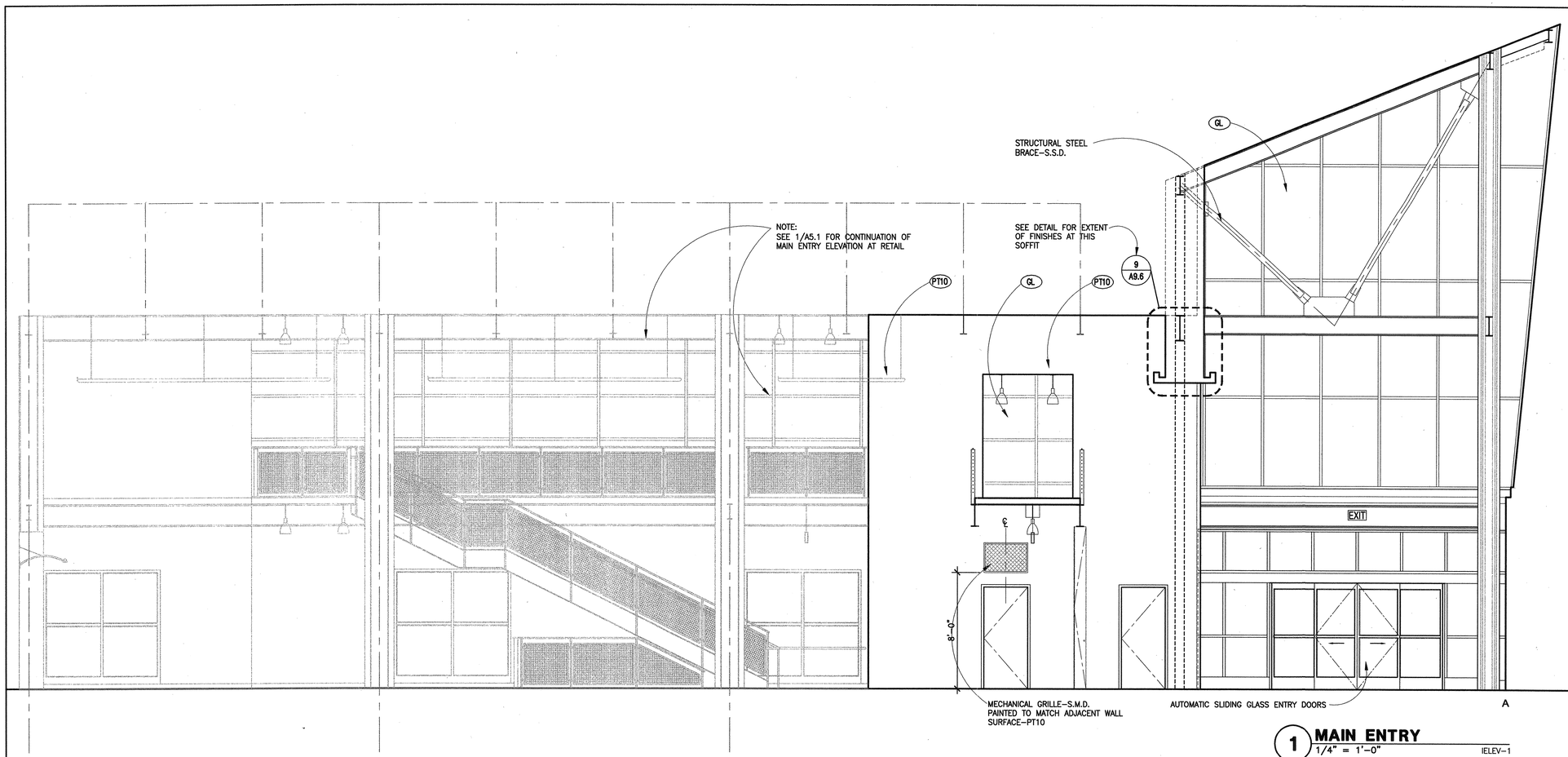

1 MAIN ENTRY
1/4" = 1'-0" IELEV-1

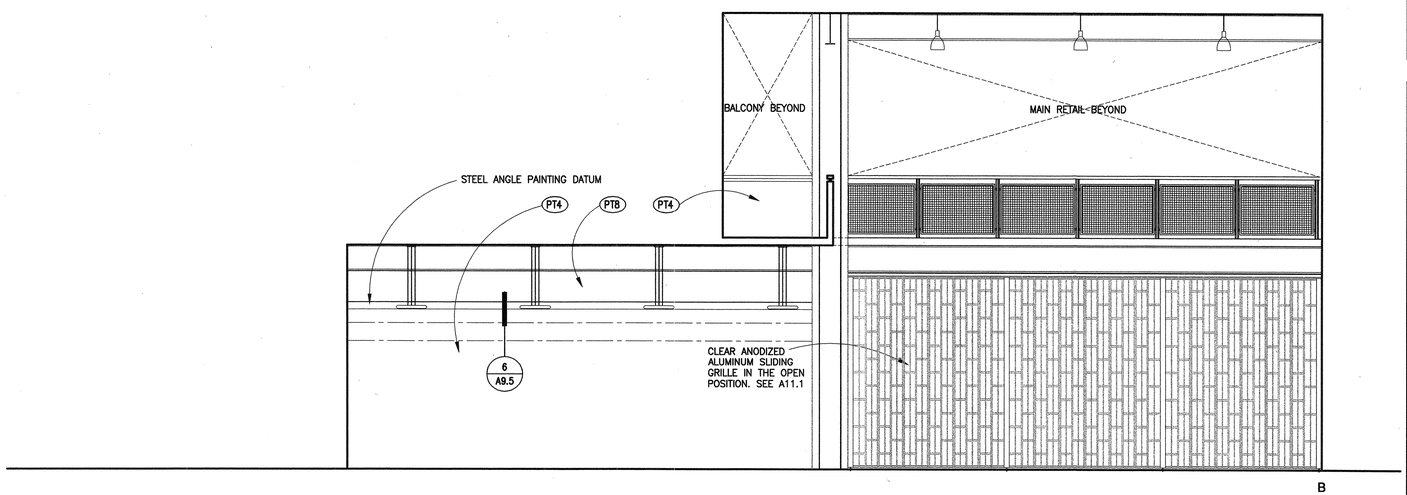

1 MAIN ENTRY & CONVENIENCE
1/4" = 1'-0" IELEV-1

GENERAL NOTES

1. ABBREVIATIONS AT RIGHT SIDE OF DRAWING TITLE INDICATE A COMPUTER DRAWING FILE NAME AND HAS NOTHING TO DO WITH CONSTRUCTION.
2. ALL INTERIOR, EXPOSED STRUCTURAL STEEL IN ADDITION TO ALL VERTICAL POSTS, HANDRAILS, AND MESH PANELS AT RAILINGS TO BE PAINTED "PT7" U.O.N.
3. ALL DIMENSIONS IN ELEVATION ARE FROM FACE OF FINISH, U.O.N.
4. REFER TO FINISH SCHEDULE A11.5 FOR ALL MATERIAL DESIGNATIONS.
5. CONFIRM ALL TOILET ACCESSORY MOUNTING HEIGHTS WITH 5/A5.6
6. PROVIDE 12" WIDE 18 GA. FLAT STOCK GSM FOR BACKING/WALL ANCHORAGE AT 93" A.F.F. TYP. U.O.N. WHERE INDICATED BY DASHED LINE AS FOLLOWS:
7. FOR RESTROOMS PROVIDE BLOCKING FOR MOUNTING OF TOILET ACCESSORIES WHERE APPLICABLE. SEE DETAIL 1/A9.3 AS REFERENCE.
8. FOR EQUIPMENT LIST AND DESIGNATION SEE EQUIPMENT SCHEDULE ON A11.5
9. SEAL ALL EXPOSED EDGES OF MDF AT WET LOCATIONS – TYP.
10. REFER TO ENLARGED PLANS FOR SPACING OF ALL VERTICAL POSTS AT RAILINGS.
11. FOR FIRE EXTINGUISHER CABINET MOUNTING HEIGHT, SEE ACCESSORY MOUNTING HEIGHTS–5/A5.6
12. FOR ALL LIGHTING FIXTURE LOCATIONS, MOUNTING HEIGHTS, AND TYPES–SEE ELECTRICAL DRAWINGS AND REFLECTED CEILING PLANS
13. CO–ORDINATE EXACT LOCATIONS OF RUBBER BASE IN RETAIL AND CONVENIENCE WITH STORE PLAN RETAIL LAYOUT WALL SHELVING AND CASEWORK.

TYP. MTRLS. LEGEND

- AC ACOUSTIC CEILING TILE
- CT CERAMIC TILE
- CPT CARPET
- CS CONCRETE FLOOR
- GB GYPSUM BOARD
- SV SHEET VINYL FLOORING
- VCT VINYL COMPOSITION TILE
- MF METAL CLADDING
- GL GLASS
- FRP FIBERGLASS REINFORCED PLASTIC
- MR MIRROR
- PL PLASTIC LAMINATE
- PT PAINT
- RB RESILIENT BASE
- SS SOLID SURFACE

BSA Architects
A California Corporation
350 PACIFIC AVENUE
SAN FRANCISCO, CA 94111
415–781–1526

DIABLO VALLEY COLLEGE

DIABLO VALLEY COLLEGE NEW BOOKSTORE

321 GOLF CLUB RD.
PLEASANT HILL, CALIFORNIA

© 2003 BSA Architects
"All drawings and written material appearing herein constitute the original and unpublished work of the architect and the same may not be duplicated, used, or disclosed without the written consent of the architect."

DATE: 23 JULY, 2004

REVISIONS:

LICENSED ARCHITECT JOHN ASHWORTH No. C26747 REN. 1–31–05 STATE OF CALIFORNIA

BID SET

SHEET TITLE:

INTERIOR ELEVATIONS

IDENTIFICATION STAMP
DIVISION OF THE STATE ARCHITECT
105925
APPL 01
AC LE FLS ED SS AI
DATE: 5-12-04 JUL 26 2004

BLDG. ID: 098
ID CODE: 312098–109.01–A
DRAWN BY: JH
CHECKED BY: JA
JOB NO: 0307
SHEET A5.3

09/02/03 A05-03.DWG

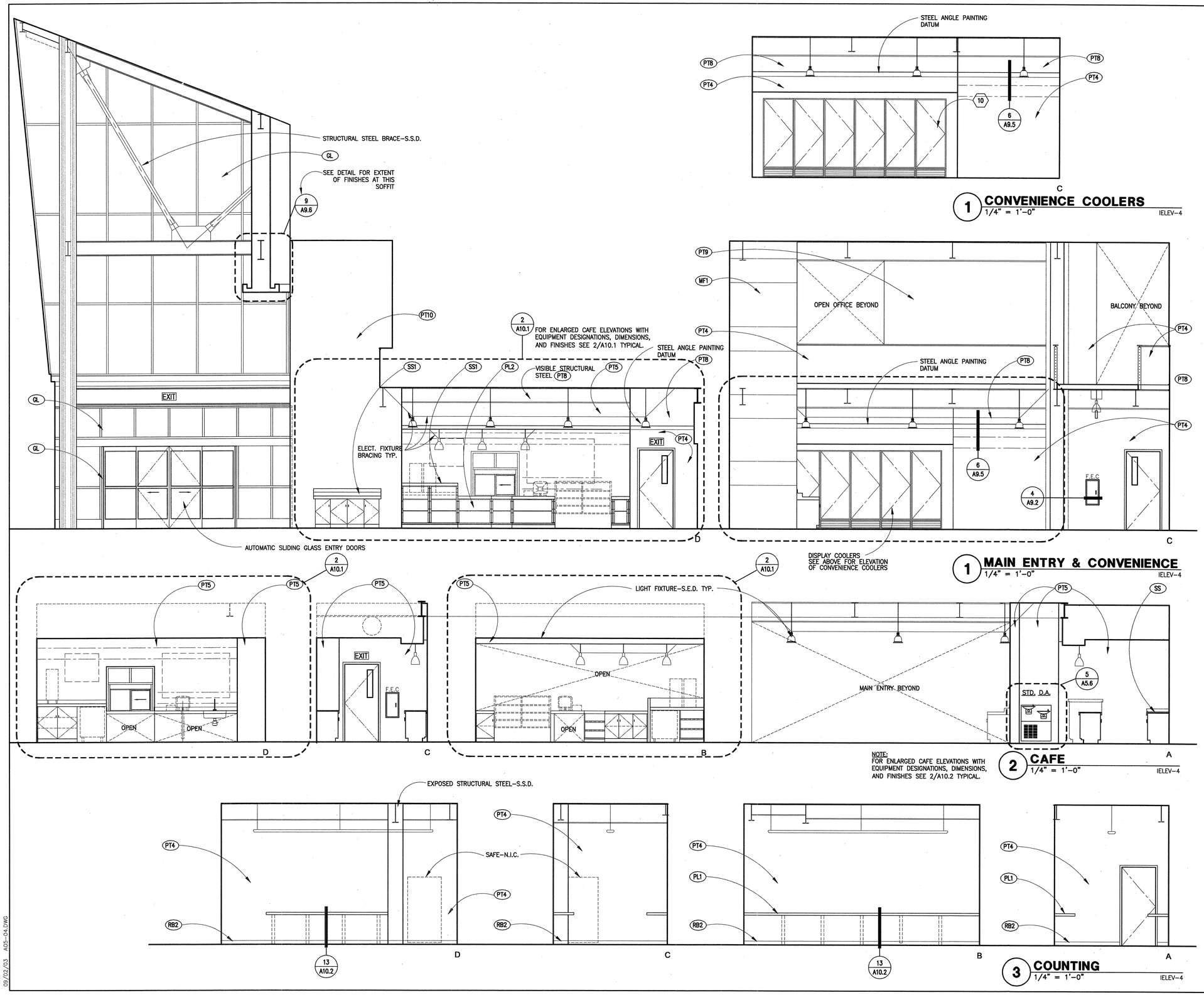

1 CONVENIENCE COOLERS
1/4" = 1'-0"
IELEV-4

1 MAIN ENTRY & CONVENIENCE
1/4" = 1'-0"
IELEV-4

2 CAFE
1/4" = 1'-0"
IELEV-4

NOTE:
FOR ENLARGED CAFE ELEVATIONS WITH EQUIPMENT DESIGNATIONS, DIMENSIONS, AND FINISHES SEE 2/A10.2 TYPICAL.

3 COUNTING
1/4" = 1'-0"
IELEV-4

GENERAL NOTES

1. ABBREVIATIONS AT RIGHT SIDE OF DRAWING TITLE INDICATE A COMPUTER DRAWING FILE NAME AND HAS NOTHING TO DO WITH CONSTRUCTION.
2. ALL INTERIOR, EXPOSED STRUCTURAL STEEL IN ADDITION TO ALL VERTICAL POSTS, HANDRAILS, AND MESH PANELS AT RAILINGS TO BE PAINTED "PT7" U.O.N.
3. ALL DIMENSIONS IN ELEVATION ARE FROM FACE OF FINISH, U.O.N.
4. REFER TO FINISH SCHEDULE A11.5 FOR ALL MATERIAL DESIGNATIONS.
5. CONFIRM ALL TOILET ACCESSORY MOUNTING HEIGHTS WITH 5/A5.6
6. PROVIDE 12" WIDE 18 GA. FLAT STOCK GSM FOR BACKING/WALL ANCHORAGE AT 93" A.F.F. TYP. U.O.N. WHERE INDICATED BY DASHED LINE AS FOLLOWS:
7. FOR RESTROOMS PROVIDE BLOCKING FOR MOUNTING OF TOILET ACCESSORIES WHERE APPLICABLE. SEE DETAIL 1/A9.3 AS REFERENCE.
8. FOR EQUIPMENT LIST AND DESIGNATION SEE EQUIPMENT SCHEDULE ON A11.5
9. SEAL ALL EXPOSED EDGES OF MDF AT WET LOCATIONS – TYP.
10. REFER TO ENLARGED PLANS FOR SPACING OF ALL VERTICAL POSTS AT RAILINGS.
11. FOR FIRE EXTINGUISHER CABINET MOUNTING HEIGHT, SEE ACCESSORY MOUNTING HEIGHTS-5/A5.6
12. FOR ALL LIGHTING FIXTURE LOCATIONS, MOUNTING HEIGHTS, AND TYPES-SEE ELECTRICAL DRAWINGS AND REFLECTED CEILING PLANS
13. CO-ORDINATE EXACT LOCATIONS OF RUBBER BASE IN RETAIL AND CONVENIENCE WITH STORE PLAN RETAIL LAYOUT WALL SHELVING AND CASEWORK.

TYP. MTRLS. LEGEND

AC	ACOUSTIC CEILING TILE
CT	CERAMIC TILE
CPT	CARPET
CS	CONCRETE FLOOR
GB	GYPSUM BOARD
SV	SHEET VINYL FLOORING
VCT	VINYL COMPOSITION TILE
MF	METAL CLADDING
GL	GLASS
FRP	FIBERGLASS REINFORCED PLASTIC
MR	MIRROR
PL	PLASTIC LAMINATE
PT	PAINT
RB	RESILIENT BASE
SS	SOLID SURFACE

BSA Architects
A California Corporation
350 PACIFIC AVENUE
SAN FRANCISCO, CA 94111
415-781-1526

DIABLO VALLEY COLLEGE

DIABLO VALLEY COLLEGE NEW BOOKSTORE

321 GOLF CLUB RD.
PLEASANT HILL, CALIFORNIA

© 2003 BSA Architects
"All drawings and written material appearing herein constitute the original and unpublished work of the architect and the same may not be duplicated, used, or disclosed without the written consent of the architect."

DATE: 23 JULY, 2004

REVISIONS:

LICENSED ARCHITECT JOHN ASHWORTH No. C26747 REN. 1-31-05 STATE OF CALIFORNIA

BID SET

SHEET TITLE:
INTERIOR ELEVATIONS

IDENTIFICATION STAMP
DIVISION OF THE STATE ARCHITECT
105925
APPL 01
AC LE FLS ED SS A1
DATE: 5-12-04 JUL 26 2004

BLDG. ID: 098
ID CODE: 312098-109.01-A

DRAWN BY: JH
CHECKED BY: JA
JOB NO: 0307

SHEET A5.4

09/02/03 A05-04.DWG

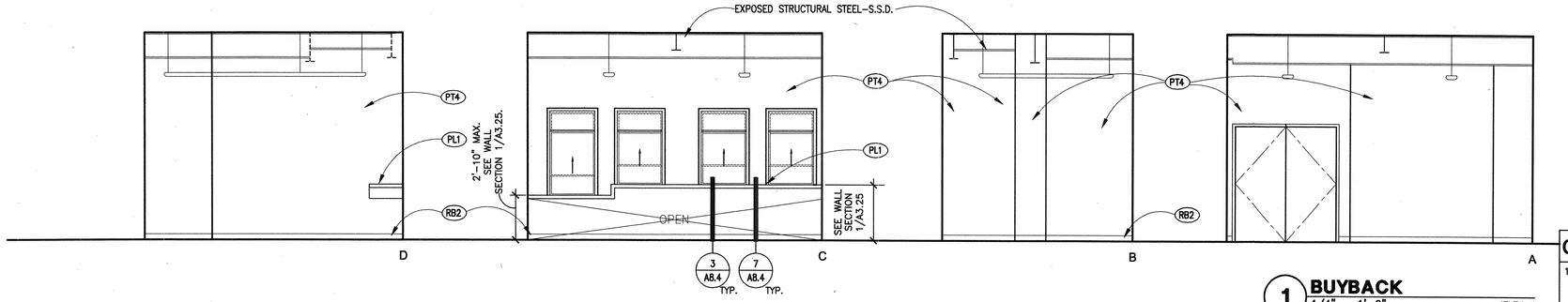

1 **BUYBACK**
1/4" = 1'–0" IELEV–4

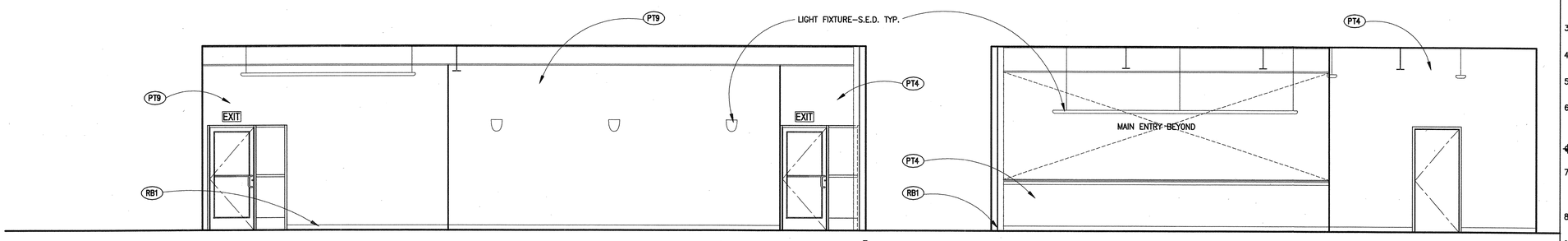

2 **OPEN OFFICE**
1/4" = 1'–0" IELEV–4

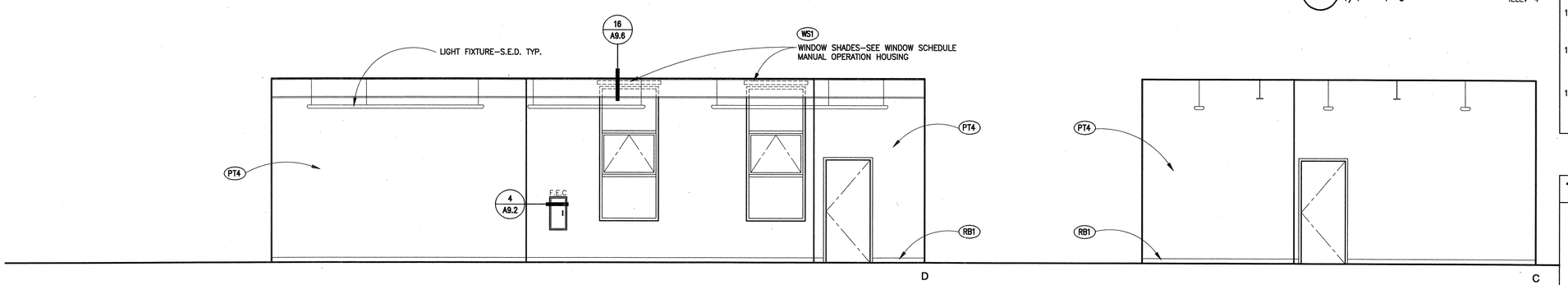

2 **OPEN OFFICE**
1/4" = 1'–0" IELEV–4

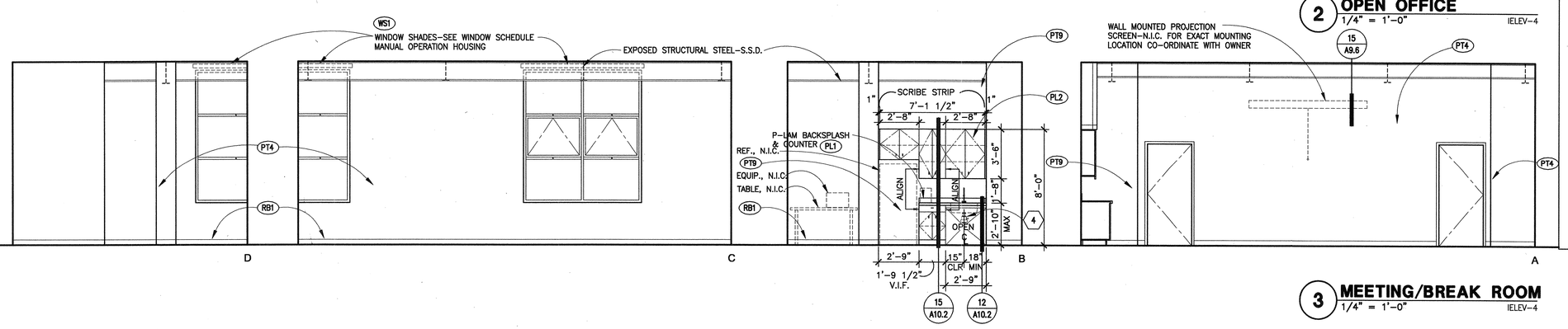

3 **MEETING/BREAK ROOM**
1/4" = 1'–0" IELEV–4

GENERAL NOTES

1. ABBREVIATIONS AT RIGHT SIDE OF DRAWING TITLE INDICATE A COMPUTER DRAWING FILE NAME AND HAS NOTHING TO DO WITH CONSTRUCTION.
2. ALL INTERIOR, EXPOSED STRUCTURAL STEEL IN ADDITION TO ALL VERTICAL POSTS, HANDRAILS, AND MESH PANELS AT RAILINGS TO BE PAINTED "PT7" U.O.N.
3. ALL DIMENSIONS IN ELEVATION ARE FROM FACE OF FINISH, U.O.N.
4. REFER TO FINISH SCHEDULE A11.5 FOR ALL MATERIAL DESIGNATIONS.
5. CONFIRM ALL TOILET ACCESSORY MOUNTING HEIGHTS WITH 5/A5.6
6. PROVIDE 12" WIDE 18 GA. FLAT STOCK GSM FOR BACKING/WALL ANCHORAGE AT 93" A.F.F. TYP. U.O.N. WHERE INDICATED BY DASHED LINE AS FOLLOWS:
7. FOR RESTROOMS PROVIDE BLOCKING FOR MOUNTING OF TOILET ACCESSORIES WHERE APPLICABLE. SEE DETAIL 1/A9.3 AS REFERENCE.
8. FOR EQUIPMENT LIST AND DESIGNATION SEE EQUIPMENT SCHEDULE ON A11.5
9. SEAL ALL EXPOSED EDGES OF MDF AT WET LOCATIONS – TYP.
10. REFER TO ENLARGED PLANS FOR SPACING OF ALL VERTICAL POSTS AT RAILINGS.
11. FOR FIRE EXTINGUISHER CABINET MOUNTING HEIGHT, SEE ACCESSORY MOUNTING HEIGHTS–5/A5.6
12. FOR ALL LIGHTING FIXTURE LOCATIONS, MOUNTING HEIGHTS, AND TYPES–SEE ELECTRICAL DRAWINGS AND REFLECTED CEILING PLANS
13. CO–ORDINATE EXACT LOCATIONS OF RUBBER BASE IN RETAIL AND CONVENIENCE WITH STORE PLAN RETAIL LAYOUT WALL SHELVING AND CASEWORK.

TYP. MTRLS. LEGEND

AC	ACOUSTIC CEILING TILE
CT	CERAMIC TILE
CPT	CARPET
CS	CONCRETE FLOOR
GB	GYPSUM BOARD
SV	SHEET VINYL FLOORING
VCT	VINYL COMPOSITION TILE
MF	METAL CLADDING
GL	GLASS
FRP	FIBERGLASS REINFORCED PLASTIC
MR	MIRROR
PL	PLASTIC LAMINATE
PT	PAINT
RB	RESILIENT BASE
SS	SOLID SURFACE

BSA Architects
A California Corporation
350 PACIFIC AVENUE
SAN FRANCISCO, CA 94111
415–781–1526

DIABLO VALLEY COLLEGE

DIABLO VALLEY COLLEGE NEW BOOKSTORE

321 GOLF CLUB RD.
PLEASANT HILL, CALIFORNIA

© 2003 BSA Architects
"All drawings and written material appearing herein constitute the original and unpublished work of the architect and the same may not be duplicated, used, or disclosed without the written consent of the architect."

DATE: 23 JULY, 2004

REVISIONS:

LICENSED ARCHITECT JOHN ASHWORTH No. C26747 REN. 1–31–05 STATE OF CALIFORNIA

BID SET

SHEET TITLE:

INTERIOR ELEVATIONS

IDENTIFICATION STAMP
DIVISION OF THE STATE ARCHITECT
105925
APPL 01
AC LE FLS EO SS #1
DATE: 512-04 JUL 26 2004

BLDG. ID: 098
ID CODE: 312098–109.01–A

DRAWN BY: JH
CHECKED BY: JA
JOB NO: 0307

SHEET A5.5

09/02/03 A05-05.DWG

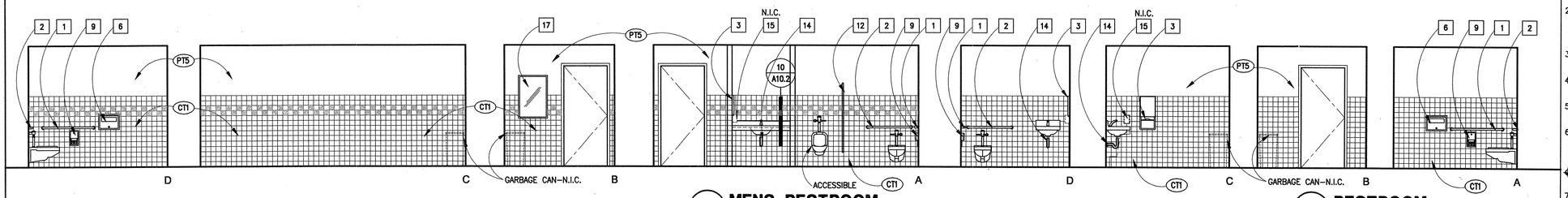

2 MENS RESTROOM
1/4" = 1'–0" IELEV–1

1 RESTROOM
1/4" = 1'–0" IELEV–4

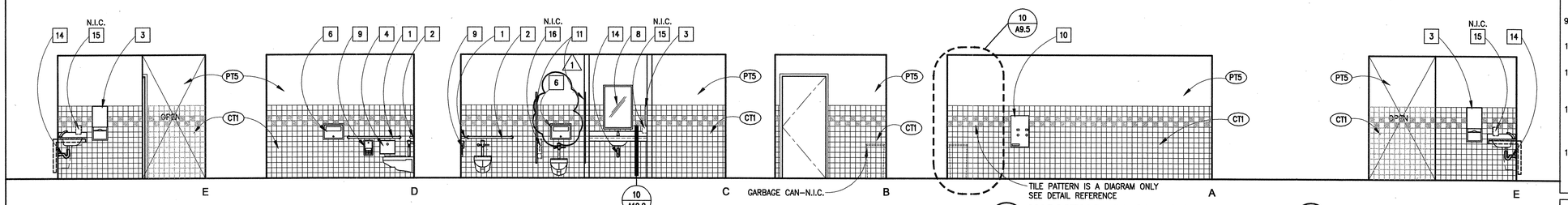

3 WOMENS RESTROOM
1/4" = 1'–0" IELEV–4

2 MENS RESTROOM
1/4" = 1'–0" IELEV–1

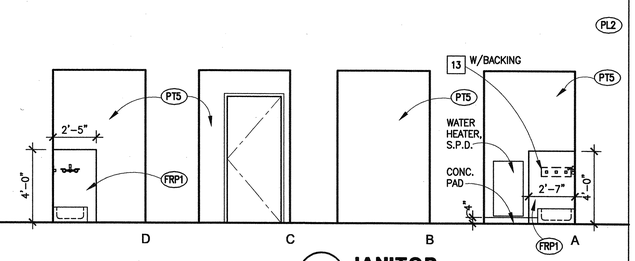

4 JANITOR
1/4" = 1'–0" IELEV–1

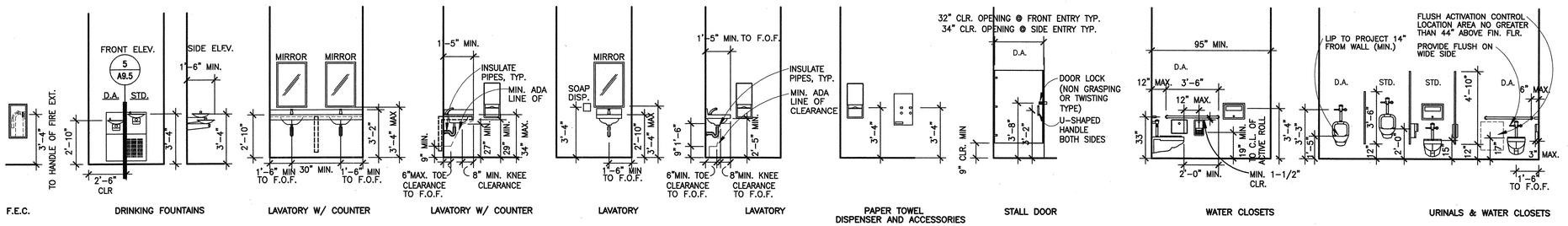

5 TOILET ROOM DIMENSIONS, CLEARANCES & ACCESSORY MOUNTING HEIGHTS
1/4" = 1'–0" IELEV–4

GENERAL NOTES

1. ABBREVIATIONS AT RIGHT SIDE OF DRAWING TITLE INDICATE A COMPUTER DRAWING FILE NAME AND HAS NOTHING TO DO WITH CONSTRUCTION.
2. ALL INTERIOR, EXPOSED STRUCTURAL STEEL IN ADDITION TO ALL VERTICAL POSTS, HANDRAILS, AND MESH PANELS AT RAILINGS TO BE PAINTED "PT7" U.O.N.
3. ALL DIMENSIONS IN ELEVATION ARE FROM FACE OF FINISH, U.O.N.
4. REFER TO FINISH SCHEDULE A11.5 FOR ALL MATERIAL DESIGNATIONS.
5. CONFIRM ALL TOILET ACCESSORY MOUNTING HEIGHTS WITH 5/A5.6
6. PROVIDE 12" WIDE 18 GA. FLAT STOCK GSM FOR BACKING/WALL ANCHORAGE AT 93" A.F.F. TYP. U.O.N. WHERE INDICATED BY DASHED LINE AS FOLLOWS:
7. FOR RESTROOMS PROVIDE BLOCKING FOR MOUNTING OF TOILET ACCESSORIES WHERE APPLICABLE. SEE DETAIL 1/A9.3 AS REFERENCE.
8. FOR EQUIPMENT LIST AND DESIGNATION SEE EQUIPMENT SCHEDULE ON A11.5
9. SEAL ALL EXPOSED EDGES OF MDF AT WET LOCATIONS – TYP.
10. REFER TO ENLARGED PLANS FOR SPACING OF ALL VERTICAL POSTS AT RAILINGS.
11. FOR FIRE EXTINGUISHER CABINET MOUNTING HEIGHT, SEE ACCESSORY MOUNTING HEIGHTS–5/A5.6
12. FOR ALL LIGHTING FIXTURE LOCATIONS, MOUNTING HEIGHTS, AND TYPES–SEE ELECTRICAL DRAWINGS AND REFLECTED CEILING PLANS
13. CO–ORDINATE EXACT LOCATIONS OF RUBBER BASE IN RETAIL AND CONVENIENCE WITH STORE PLAN RETAIL LAYOUT WALL SHELVING AND CASEWORK.

TYP. MTRLS. LEGEND

- AC ACOUSTIC CEILING TILE
- CT CERAMIC TILE
- CPT CARPET
- CS CONCRETE FLOOR
- GB GYPSUM BOARD
- SV SHEET VINYL FLOORING
- VCT VINYL COMPOSITION TILE
- MF METAL CLADDING
- GL GLASS
- FRP FIBERGLASS REINFORCED PLASTIC
- MR MIRROR
- PL PLASTIC LAMINATE
- PT PAINT
- RB RESILIENT BASE
- SS SOLID SURFACE

TOILET ACCESSORIES

	ITEM	MOUNTING
1	42" GRAB BAR	SURFACE
2	36" GRAB BAR	SURFACE
3	PAPER TOWEL DISPENSER	RECESSED
4	SANITARY NAPKIN DISPOSAL	RECESSED
5	SANITARY NAPKIN DISPOSAL	SURFACE
6	SEAT COVER DISPENSER	RECESSED
7	SEAT COVER DISPENSER	SURFACE
8	24"x36" MIRROR	SURFACE
9	TOILET TISSUE DISPENSER	RECESSED
10	SANITARY NAPKIN DISPENSER	RECESSED
11	TOILET PARTITION	–
12	URINAL SCREEN	–
13	MOP HOLDER/SHELF	SURFACE
14	PIPE WRAP	–
15	SOAP DISPENSER	SURFACE
16	TOILET TISSUE DISPENSER	SURFACE
17	POLISHED S.S.MIRROR 23 1/2" X 35 1/2"	SURFACE

NOTE: DASHED LINES REPRESENT TOILET ACCESSORIES THAT ARE N.I.C., AND FURNISHED BY OWNER

FOR TOILET ACCESSORIES MOUNTING HEIGHT SEE 5/A5.6. PROVIDE BLOCKING FOR TOILET ACCESSORIES PER DETAIL 1/A9.3

BSA Architects
A California Corporation
350 PACIFIC AVENUE
SAN FRANCISCO, CA 94111
415–781–1526

DIABLO VALLEY COLLEGE

DIABLO VALLEY COLLEGE NEW BOOKSTORE

321 GOLF CLUB RD.
PLEASANT HILL, CALIFORNIA

© 2003 BSA Architects
"All drawings and written material appearing herein constitute the original and unpublished work of the architect and the same may not be duplicated, used, or disclosed without the written consent of the architect."

DATE: 23 JULY, 2004

REVISIONS:

LICENSED ARCHITECT JOHN ASHWORTH No. C26747 REN. 1–31–05 STATE OF CALIFORNIA

BID SET

SHEET TITLE:
INTERIOR ELEVATIONS

IDENTIFICATION STAMP
DIVISION OF THE STATE ARCHITECT
105925
APPL 01
AC LE FLS ED SS AT
DATE: 5-12-04 JUL 26 2004

BLDG. ID: 098
ID CODE: 312098–109.01–A

DRAWN BY: JH
CHECKED BY: JA
JOB NO: 0307

SHEET
A5.6

09/02/03 A05–06.DWG

CEILING PLAN NOTES

1. ALL CEILING DIMENSIONS ARE TO FINISHED CEILING OR SOFFIT U.O.N
2. SEE SCHEDULES ON A11.5
3. SEE SHEET A9.1 FOR PARTITION TYPES AND DETAILS
4. SEE DETAIL 2/A9.6 FOR TYP. SUSPENDED GYP. BD. CEILING ASSEMBLIES
   SEE DETAIL 1/A9.6 FOR TYP. SUSPENDED ACOUSTICAL PANEL CEILING ASSEMBLIES
5. SEE MECHANICAL DRAWINGS FOR SPECIFIC INFORMATION ON DIFFUSERS
6. SEE ELECTRICAL DRAWINGS FOR SPECIFIC INFORMATION ON LIGHT FIXTURES
7. ALL LIGHT FIXTURES IN CEILING GRID TO BE CENTERED ON CEILING GRID PANEL U.O.N.
8. ALL MECH. DIFFUSERS IN CEILING GRID TO BE CENTERED ON CEILING GRID PANEL U.O.N.
9. FINISH CLG. TO BE +8'-0" A.F.F. U.O.N.
10. PROVIDE SOLID EDGE BLOCKING @ ALL EDGES OF GYPBD. CEILING PANELS AS REQ.
11. ALL LIGHT FIXTURES IN EXPOSED STRUCTURAL CEILING TO BE CENTERED ON STRUCTURAL BAY OR WALL U.O.N.
12. ALL EXPOSED PIPING TO BE PAINTED COLOR TO MATCH STRUCTURAL DECK TYP.
13. ALL SPRINKLER MAINS PENETRATE STRUCTURAL BEAMS. DO NOT SUSPEND FROM BOTTOM OF BEAMS –SPD & SSD.

CEILING PLAN LEGEND

- 2x2 CEILING GRID. SEE FIN. SCHED. CENTERED ON CORRIDOR
- 1x1 CEILING GRID CENTERED ON CORRIDOR
- GYP. BOARD CEILING
- EXT. CEMENT PLASTER CEILING
- EXPOSED STRUCTURAL MTL. DECK CEILING – PT6
- EXPOSED STRUCTURAL MTL. DECK CEILING – PT8
- CORRUGATED MTL. CEILING/ SOFFIT– FF3 (CORRUGATION PERPENDICULAR TO EXT. WALL)
- 2X4 FLUORESCENT FIXTURE
- 2X2 FLUORESCENT FIXTURE
- RECESSED DOWNLIGHT
- PENDANT LIGHT FIXTURE
- CLNG. SUSPENDED FLUORESCENT
- EXPOSED FLUORESCENT
- DIFFUSER
- RETURN AIR
- CLNG. MNTD. FLUORESCENT
- EXHAUST FAN
- +8'-0" FINISH CEILING HEIGHT A.F.F.
- WINDOW BLINDS, SEE WINDOW SCHED. A11.2
- —SP— SPRINKLER MAIN. SPD.
- —OD— OVERFLOW DRAIN PLUMBING. SPD.
- —RD— ROOF DRAIN PLUMBING. SPD.

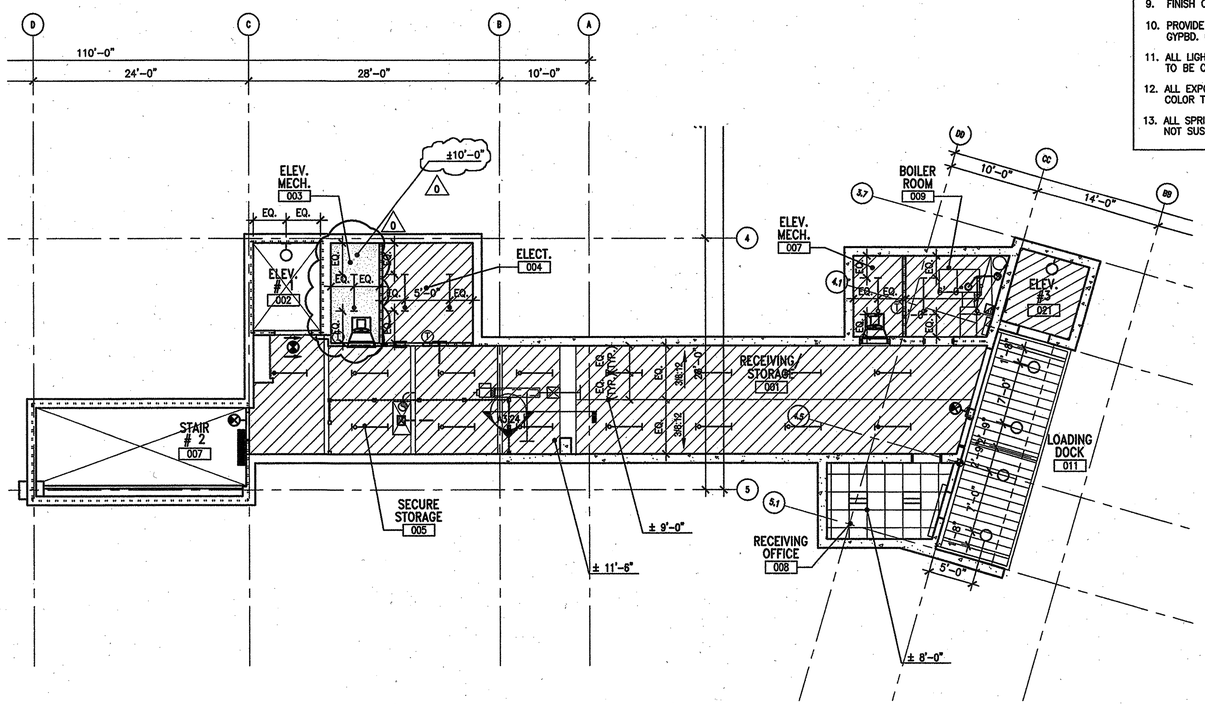

1 **BASEMENT REFLECTED CEILING PLAN**
1/8"=1'-0"
PLAN-1

0 1' 4' 8' 16' 24'

PLAN NORTH

BSA Architects
A California Corporation
350 PACIFIC AVENUE
SAN FRANCISCO, CA 94111
415-781-1526

DIABLO VALLEY COLLEGE

DIABLO VALLEY COLLEGE NEW BOOKSTORE

321 GOLF CLUB RD.
PLEASANT HILL, CALIFORNIA

© 2003 BSA Architects
"All drawings and written material appearing herein constitute the original and unpublished work of the architect and the same may not be duplicated, used, or disclosed without the written consent of the architect."

DATE: 23 JULY, 2004

REVISIONS:
0 REVISIONS– 23 JULY, 2004

LICENSED ARCHITECT JOHN ASHMUN No. C26747 REN. 1-31-05 STATE OF CALIFORNIA

BID SET

SHEET TITLE:
BASEMENT REFLECTED CEILING PLAN

IDENTIFICATION STAMP
DIVISION OF THE STATE ARCHITECT
105925
APPL 01
AC LZ FLS EO SS AT
DATE: 5-12-04 JUL 26 2004

BLDG. ID: 098
ID CODE: 312098-109.01-A

DRAWN BY: GL
CHECKED BY: JA
JOB NO: 0307

SHEET A6.0

8/15/03 A06-00.DWG

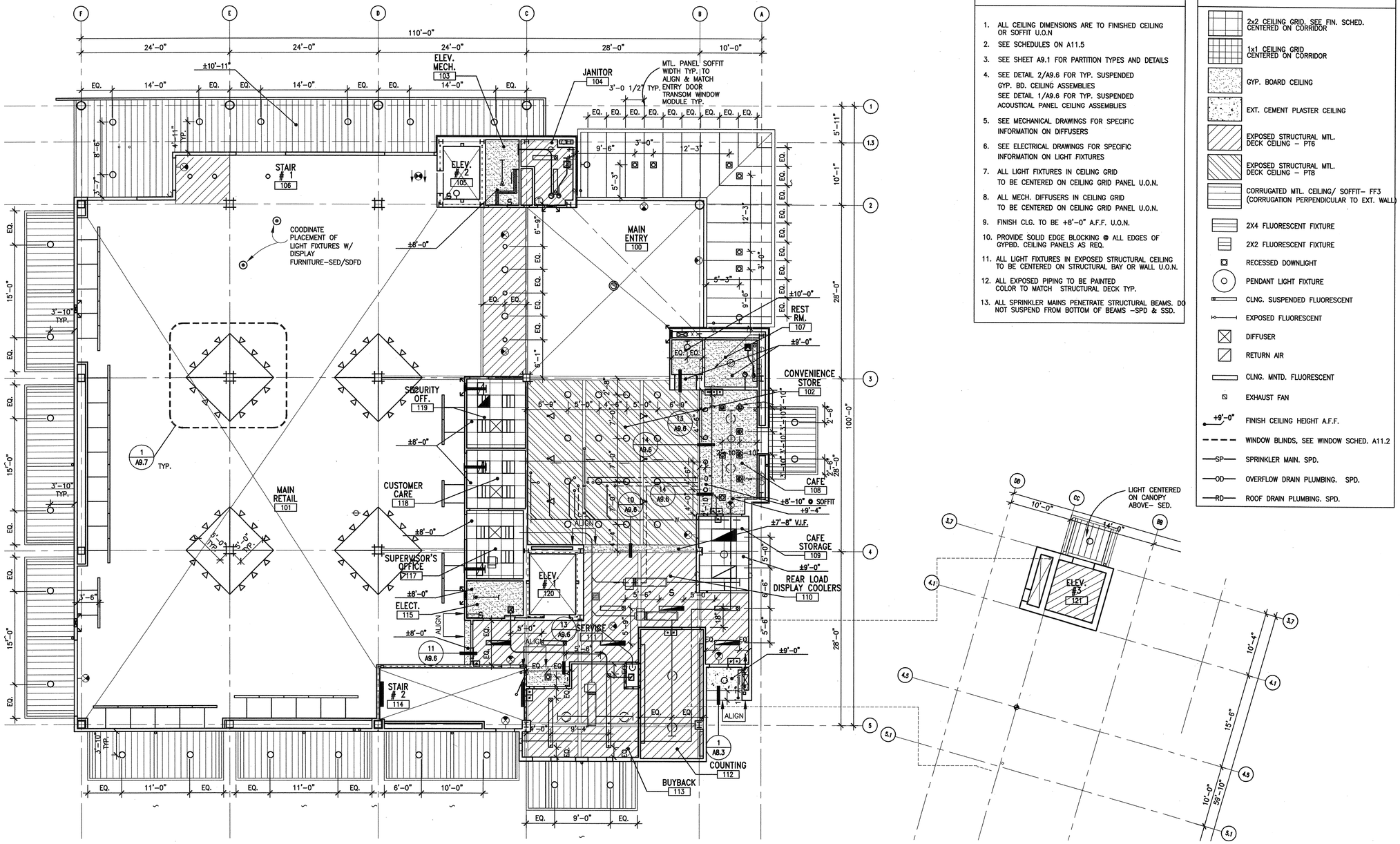

1 **FIRST FLOOR REFLECTED CEILING PLAN**
1/8"=1'-0"
PLAN-1

CEILING PLAN NOTES

1. ALL CEILING DIMENSIONS ARE TO FINISHED CEILING OR SOFFIT U.O.N
2. SEE SCHEDULES ON A11.5
3. SEE SHEET A9.1 FOR PARTITION TYPES AND DETAILS
4. SEE DETAIL 2/A9.6 FOR TYP. SUSPENDED GYP. BD. CEILING ASSEMBLIES
   SEE DETAIL 1/A9.6 FOR TYP. SUSPENDED ACOUSTICAL PANEL CEILING ASSEMBLIES
5. SEE MECHANICAL DRAWINGS FOR SPECIFIC INFORMATION ON DIFFUSERS
6. SEE ELECTRICAL DRAWINGS FOR SPECIFIC INFORMATION ON LIGHT FIXTURES
7. ALL LIGHT FIXTURES IN CEILING GRID TO BE CENTERED ON CEILING GRID PANEL U.O.N.
8. ALL MECH. DIFFUSERS IN CEILING GRID TO BE CENTERED ON CEILING GRID PANEL U.O.N.
9. FINISH CLG. TO BE +8'-0" A.F.F. U.O.N.
10. PROVIDE SOLID EDGE BLOCKING @ ALL EDGES OF GYPBD. CEILING PANELS AS REQ.
11. ALL LIGHT FIXTURES IN EXPOSED STRUCTURAL CEILING TO BE CENTERED ON STRUCTURAL BAY OR WALL U.O.N.
12. ALL EXPOSED PIPING TO BE PAINTED COLOR TO MATCH STRUCTURAL DECK TYP.
13. ALL SPRINKLER MAINS PENETRATE STRUCTURAL BEAMS. DO NOT SUSPEND FROM BOTTOM OF BEAMS -SPD & SSD.

CEILING PLAN LEGEND

- 2x2 CEILING GRID. SEE FIN. SCHED. CENTERED ON CORRIDOR
- 1x1 CEILING GRID CENTERED ON CORRIDOR
- GYP. BOARD CEILING
- EXT. CEMENT PLASTER CEILING
- EXPOSED STRUCTURAL MTL. DECK CEILING – PT6
- EXPOSED STRUCTURAL MTL. DECK CEILING – PT8
- CORRUGATED MTL. CEILING/ SOFFIT– FF3 (CORRUGATION PERPENDICULAR TO EXT. WALL)
- 2X4 FLUORESCENT FIXTURE
- 2X2 FLUORESCENT FIXTURE
- RECESSED DOWNLIGHT
- PENDANT LIGHT FIXTURE
- CLNG. SUSPENDED FLUORESCENT
- EXPOSED FLUORESCENT
- DIFFUSER
- RETURN AIR
- CLNG. MNTD. FLUORESCENT
- EXHAUST FAN
- +9'-0" FINISH CEILING HEIGHT A.F.F.
- WINDOW BLINDS, SEE WINDOW SCHED. A11.2
- —SP— SPRINKLER MAIN. SPD.
- —OD— OVERFLOW DRAIN PLUMBING. SPD.
- —RD— ROOF DRAIN PLUMBING. SPD.

0 1' 4' 8' 16' 24'

PLAN NORTH

BSA Architects
A California Corporation
350 PACIFIC AVENUE
SAN FRANCISCO, CA 94111
415-781-1526

DIABLO VALLEY COLLEGE

DIABLO VALLEY COLLEGE NEW BOOKSTORE

321 GOLF CLUB RD.
PLEASANT HILL, CALIFORNIA

© 2003 BSA Architects
"All drawings and written material appearing herein constitute the original and unpublished work of the architect and the same may not be duplicated, used, or disclosed without the written consent of the architect."

DATE: 23 JULY, 2004

REVISIONS:

LICENSED ARCHITECT JOHN ASHWORTH No. C26747 REN. 1-31-05 STATE OF CALIFORNIA

BID SET

SHEET TITLE:

FIRST FLOOR REFLECTED CEILING PLAN

IDENTIFICATION STAMP
DIVISION OF THE STATE ARCHITECT
105925
APPL 01
AC LE FLS ED SS AI
DATE: 5-12-04 JUL 26 2004

BLDG. ID: 098
ID CODE: 312098-109.01-A

DRAWN BY: GL
CHECKED BY: JA
JOB NO: 0307

SHEET A6.1

7/29/03 A06-01.DWG

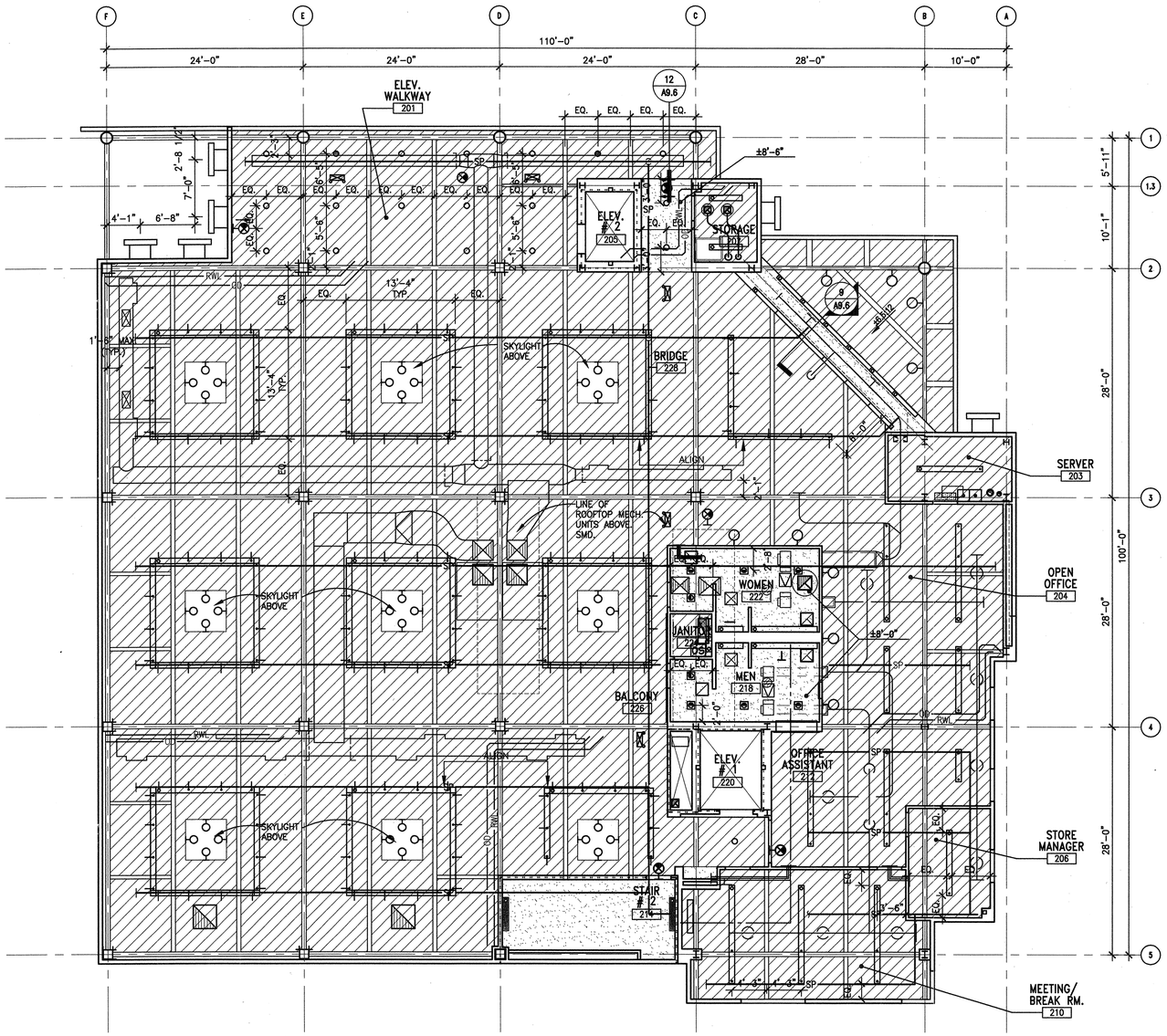

1 SECOND FLOOR REFLECTED CEILING PLAN

1/8"=1'-0"

PLAN-2

0 1' 4' 8' 16' 24'

PLAN NORTH

CEILING PLAN NOTES

1. ALL CEILING DIMENSIONS ARE TO FINISHED CEILING OR SOFFIT U.O.N
2. SEE SCHEDULES ON A11.5
3. SEE SHEET A9.1 FOR PARTITION TYPES AND DETAILS
4. SEE DETAIL 2/A9.6 FOR TYP. SUSPENDED GYP. BD. CEILING ASSEMBLIES
   SEE DETAIL 1/A9.6 FOR TYP. SUSPENDED ACOUSTICAL PANEL CEILING ASSEMBLIES
5. SEE MECHANICAL DRAWINGS FOR SPECIFIC INFORMATION ON DIFFUSERS
6. SEE ELECTRICAL DRAWINGS FOR SPECIFIC INFORMATION ON LIGHT FIXTURES
7. ALL LIGHT FIXTURES IN CEILING GRID TO BE CENTERED ON CEILING GRID PANEL U.O.N.
8. ALL MECH. DIFFUSERS IN CEILING GRID TO BE CENTERED ON CEILING GRID PANEL U.O.N.
9. FINISH CLG. TO BE +8'-0" A.F.F. U.O.N.
10. PROVIDE SOLID EDGE BLOCKING @ ALL EDGES OF GYPBD. CEILING PANELS AS REQ.
11. ALL LIGHT FIXTURES IN EXPOSED STRUCTURAL CEILING TO BE CENTERED ON STRUCTURAL BAY OR WALL U.O.N.
12. ALL EXPOSED PIPING TO BE PAINTED COLOR TO MATCH STRUCTURAL DECK TYP.
13. ALL SPRINKLER MAINS PENETRATE STRUCTURAL BEAMS. DO NOT SUSPEND FROM BOTTOM OF BEAMS -SPD & SSD.

CEILING PLAN LEGEND

- 2x2 CEILING GRID. SEE FIN. SCHED. CENTERED ON CORRIDOR
- 1x1 CEILING GRID CENTERED ON CORRIDOR
- GYP. BOARD CEILING
- EXT. CEMENT PLASTER CEILING
- EXPOSED STRUCTURAL MTL. DECK CEILING – PT6
- EXPOSED STRUCTURAL MTL. DECK CEILING – PT8
- CORRUGATED MTL. CEILING/ SOFFIT– FF3 (CORRUGATION PERPENDICULAR TO EXT. WALL)
- 2X4 FLUORESCENT FIXTURE
- 2X2 FLUORESCENT FIXTURE
- RECESSED DOWNLIGHT
- PENDANT LIGHT FIXTURE
- CLNG. SUSPENDED FLUORESCENT
- EXPOSED FLUORESCENT
- DIFFUSER
- RETURN AIR
- CLNG. MNTD. FLUORESCENT
- EXHAUST FAN
- +9'-0" FINISH CEILING HEIGHT A.F.F.
- WINDOW BLINDS, SEE WINDOW SCHED. A11.2
- —SP— SPRINKLER MAIN. SPD.
- —OD— OVERFLOW DRAIN PLUMBING. SPD.
- —RD— ROOF DRAIN PLUMBING. SPD.

BSA Architects
A California Corporation
350 PACIFIC AVENUE
SAN FRANCISCO, CA 94111
415-781-1526

DIABLO VALLEY COLLEGE

DIABLO VALLEY COLLEGE NEW BOOKSTORE

321 GOLF CLUB RD.
PLEASANT HILL, CALIFORNIA

© 2003 BSA Architects
"All drawings and written material appearing herein constitute the original and unpublished work of the architect and the same may not be duplicated, used, or disclosed without the written consent of the architect."

DATE: 23 JULY, 2004

REVISIONS:

LICENSED ARCHITECT JOHN ASHWORTH No. C26747 REN. 1-31-05 STATE OF CALIFORNIA

BID SET

SHEET TITLE:

SECOND FLOOR REFLECTED CEILING PLAN

IDENTIFICATION STAMP
DIVISION OF THE STATE ARCHITECT
105925
APPL 01
AC LE FLS EO SS A1
DATE: 5-12-04 JUL 26 2004

BLDG. ID: 098
ID CODE: 312098-109.01-A

DRAWN BY: GL
CHECKED BY: JA
JOB NO: 0307

SHEET A6.2

8/11/03 A06-02.DWG

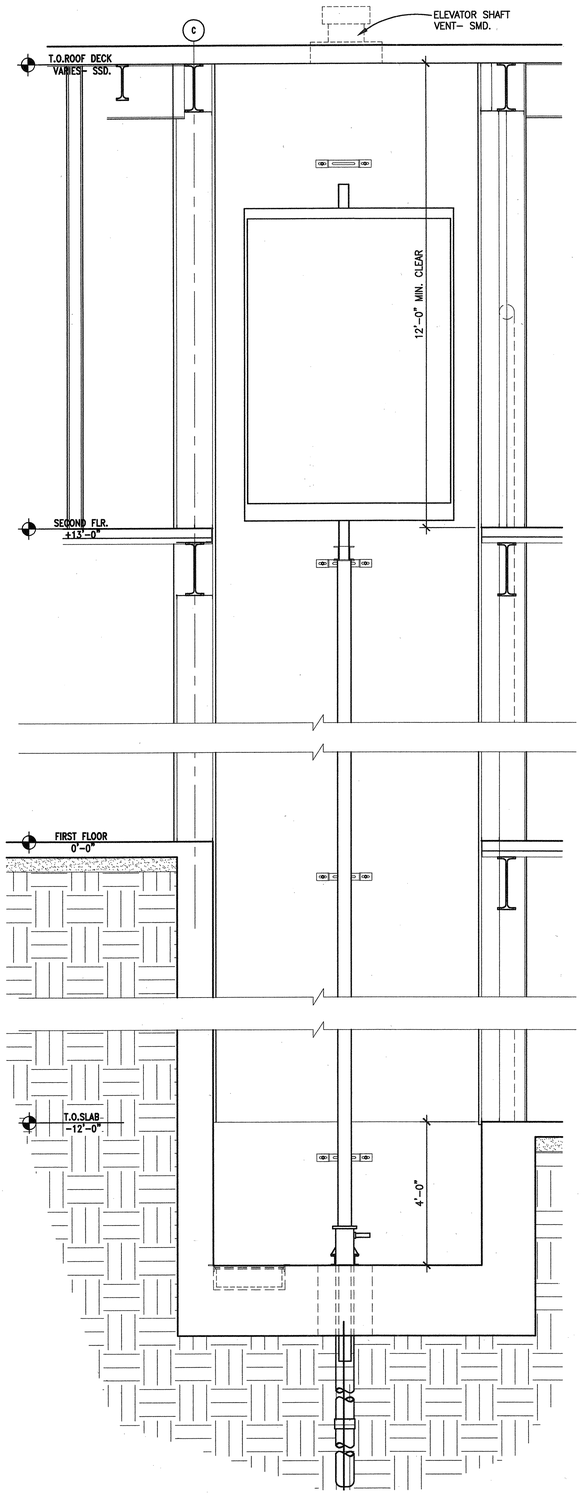

6 SECTION THROUGH ELEV. 1
1/4"=1'–0" STRSEC1

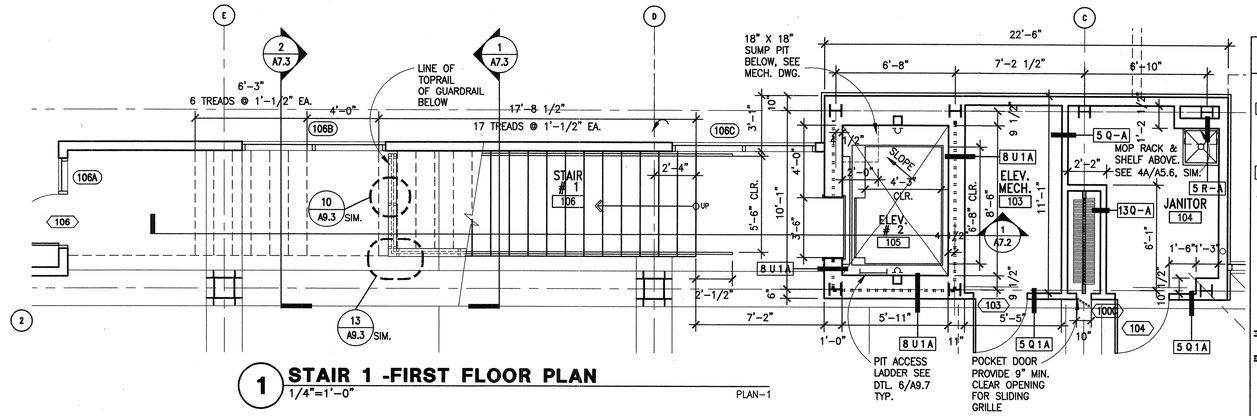

1 STAIR 1 -FIRST FLOOR PLAN
1/4"=1'–0" PLAN–1

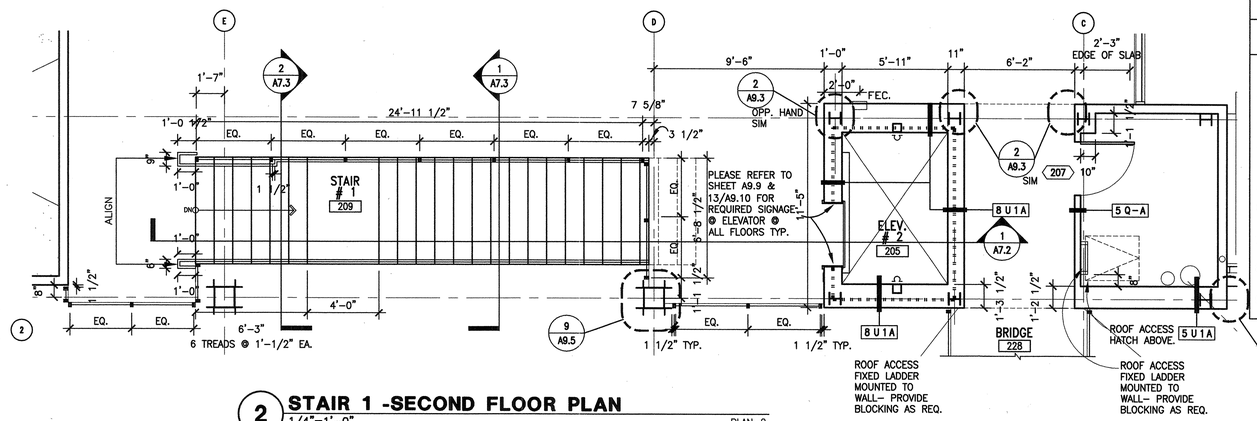

2 STAIR 1 -SECOND FLOOR PLAN
1/4"=1'–0" PLAN–2

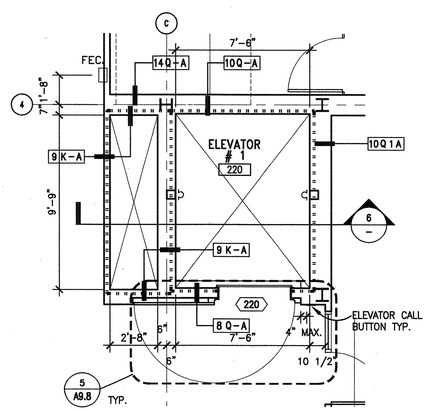

5 ELEV. 1 -SECOND FLOOR PLAN
1/4"=1'–0" PLAN–2

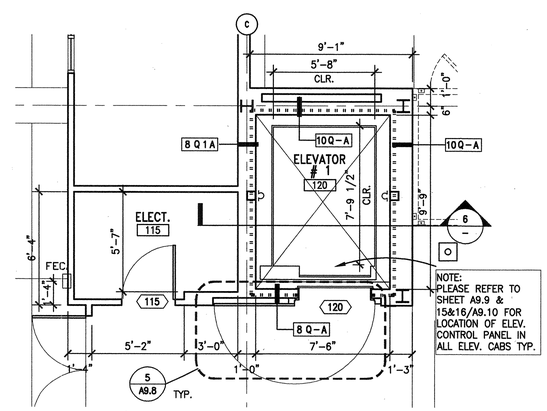

4 ELEV. 1 -FIRST FLOOR PLAN
1/4"=1'–0" PLAN–1

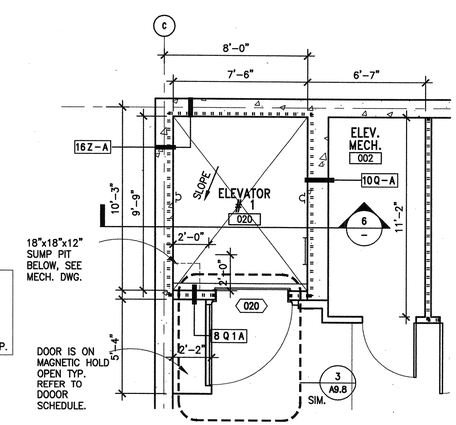

3 ELEV. 1 -BASEMENT FLOOR PLAN
1/4"=1'–0" PLAN–0

PLAN NORTH

0 1' 4' 8' 12'

PLAN LEGEND

- UNIT / 100 — ROOM NAME / ROOM NUMBER
- INTERNATIONAL SYMBOL OF ACCESSIBILITY
- 1 A–H — PARTITION TYPES – SEE A9.1
- 100 — DOOR NUMBER – SEE SCHEDULE: A11.1
- 100 — WINDOW NUMBER – SEE SCHEDULE: A11.2/A11.3
- 100 — LOUVER NUMBER – SEE SCHEDULE: A11.3
- 100 — TOILET ACCESSORY SYMBOL –SEE SCHED.: A5.6
- 100 — EQUIPMENT SYMBOL –SEE SCHEDULE: A11.5
- CPT — FLOOR FINISH, SEE SCHEDULE A11.4, A11.5
- C.I.P. PARTITION – SSD
- 1 HR. RATED WALL ASSEMBLY – SEE 8/A9.1
- F.E.C. — FIRE EXTINGUISHER CABINET, DIMENSIONED TO CENTERLINE REF. 4/A9.2
- DS — DOWN SPOUT FOR TYP. MOUNTING HEIGHT SEE 2/A3.20, 4/A8.3

GENERAL NOTES

1. ALL DIMENSIONS ARE FROM GRIDLINE, FACE OF FRAMING OR FACE OF CONC., U.O.N.
2. SEE SHEET A9.1 FOR PARTITION TYPES AND DETAILS.
3. SEE SHEET A11.1, A11.2 & A11.3 FOR DOOR AND WINDOW SCHEDULES.
4. SEE ENLARGED PLANS SHEETS A4.1 FOR ADDITIONAL DIMENSIONS, PARTITION TYPE SYMBOLS AND DOOR & WINDOW KEYS
5. SEE SHEETS A2.4 & A2.5 FOR FINISH PLAN
6. FOR STRUCTURAL STL. LOCATIONS & SIZES @ STAIR LANDINGS & STRINGERS –SSD. TYP.
7. SEE SHEET A5.6 & A11.5 FOR TOILET ACCESSORIES LIST & EQUIPMENT SCHEDULES.
8. SEE SHEET A8.1 FOR EXTERIOR WALL ASSEMBLY TYPES AND DETAILS.
9. REFER TO STRUCTURAL DRAWINGS FOR STEEL LOCATIONS AND SIZES AT LANDINGS AND STRINGERS

BSA Architects
A California Corporation
350 PACIFIC AVENUE
SAN FRANCISCO, CA 94111
415–781–1526

DIABLO VALLEY COLLEGE

DIABLO VALLEY COLLEGE NEW BOOKSTORE

321 GOLF CLUB RD.
PLEASANT HILL, CALIFORNIA

© 2003 BSA Architects
"All drawings and written material appearing herein constitute the original and unpublished work of the architect and the same may not be duplicated, used, or disclosed without the written consent of the architect."

DATE: 23 JULY, 2004

REVISIONS:

LICENSED ARCHITECT JOHN ASHWORTH No. C26747 REN. 1-31-05 STATE OF CALIFORNIA

BID SET

SHEET TITLE:
ENLARGED STAIR & ELEV. PLANS

IDENTIFICATION STAMP
DIVISION OF THE STATE ARCHITECT
105925
APPL 01
AC LE FLS ED SS AT
DATE: 5-12-04 JUL 26 2004

BLDG. ID: 098
ID CODE: 312098–109.01–A

DRAWN BY: GL/WC
CHECKED BY: GL
JOB NO: 0307.10

SHEET A7.1

8/11/03 A07-01.DWG

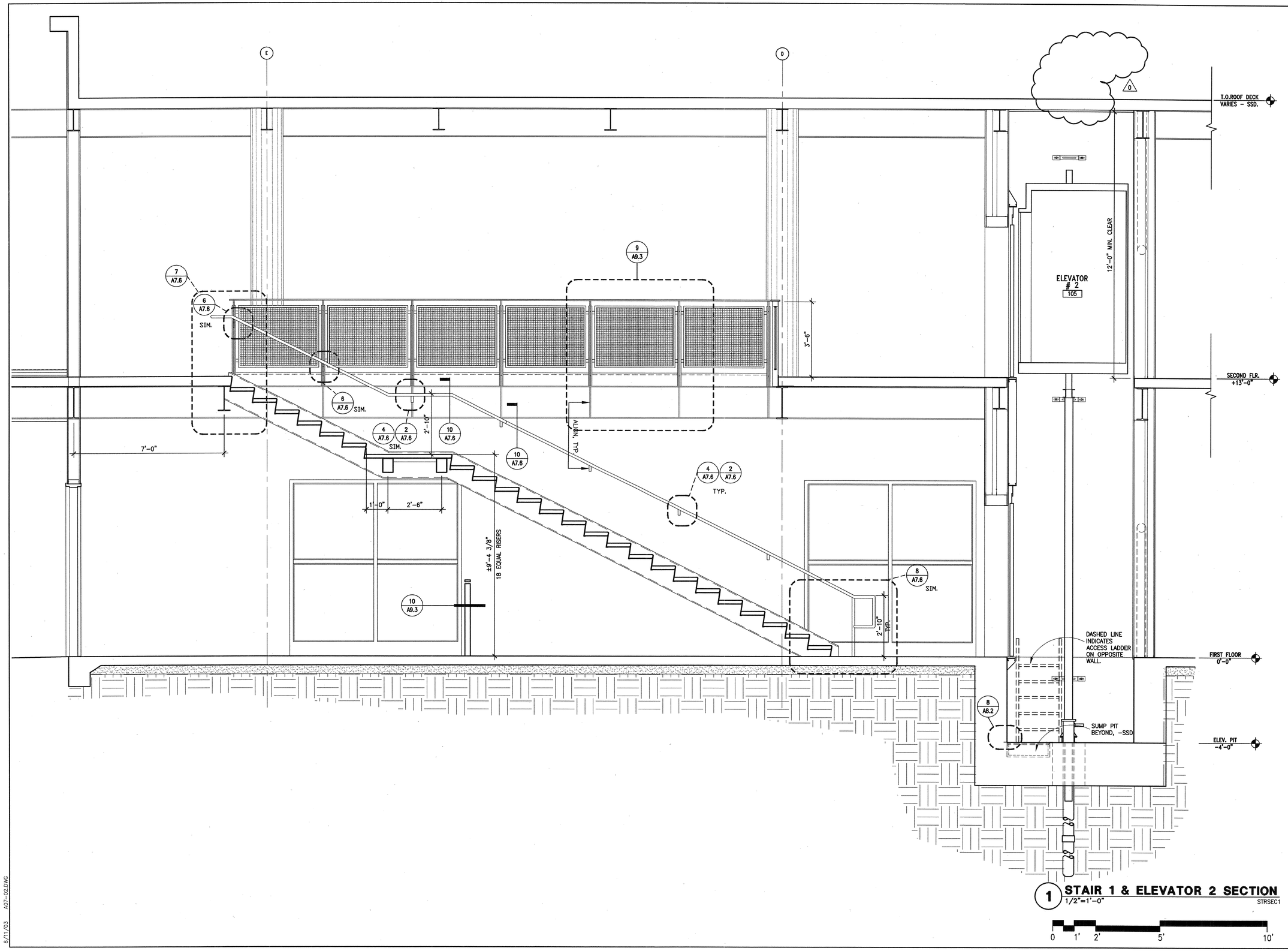

1 STAIR 1 & ELEVATOR 2 SECTION
1/2"=1'-0"
STRSEC1

0 1' 2' 5' 10'

8/11/03 A07-02.DWG

BSA
Architects
A California Corporation
350 PACIFIC AVENUE
SAN FRANCISCO, CA 94111
415-781-1526

DIABLO VALLEY COLLEGE

DIABLO VALLEY COLLEGE NEW BOOKSTORE

321 GOLF CLUB RD.
PLEASANT HILL, CALIFORNIA

© 2003 BSA Architects
"All drawings and written material appearing herein constitute the original and unpublished work of the architect and the same may not be duplicated, used, or disclosed without the written consent of the architect."

DATE: 23 JULY, 2004

REVISIONS:
0 REVISIONS- 23 JULY, 2004

LICENSED ARCHITECT
JOHN ASHWORTH
No. C26747
REN. 1-31-05
STATE OF CALIFORNIA

BID SET

SHEET TITLE:
STAIR & ELEV. SECTION

IDENTIFICATION STAMP
DIVISION OF THE STATE ARCHITECT
105925
APPL 01
AC LE FLS ED SS
DATE: 5-12-04 JUL 20 2004

BLDG. ID: 098
ID CODE: 312098-109.01-A

DRAWN BY: WC
CHECKED BY: GL
JOB NO: 0307.10

SHEET
A7.2

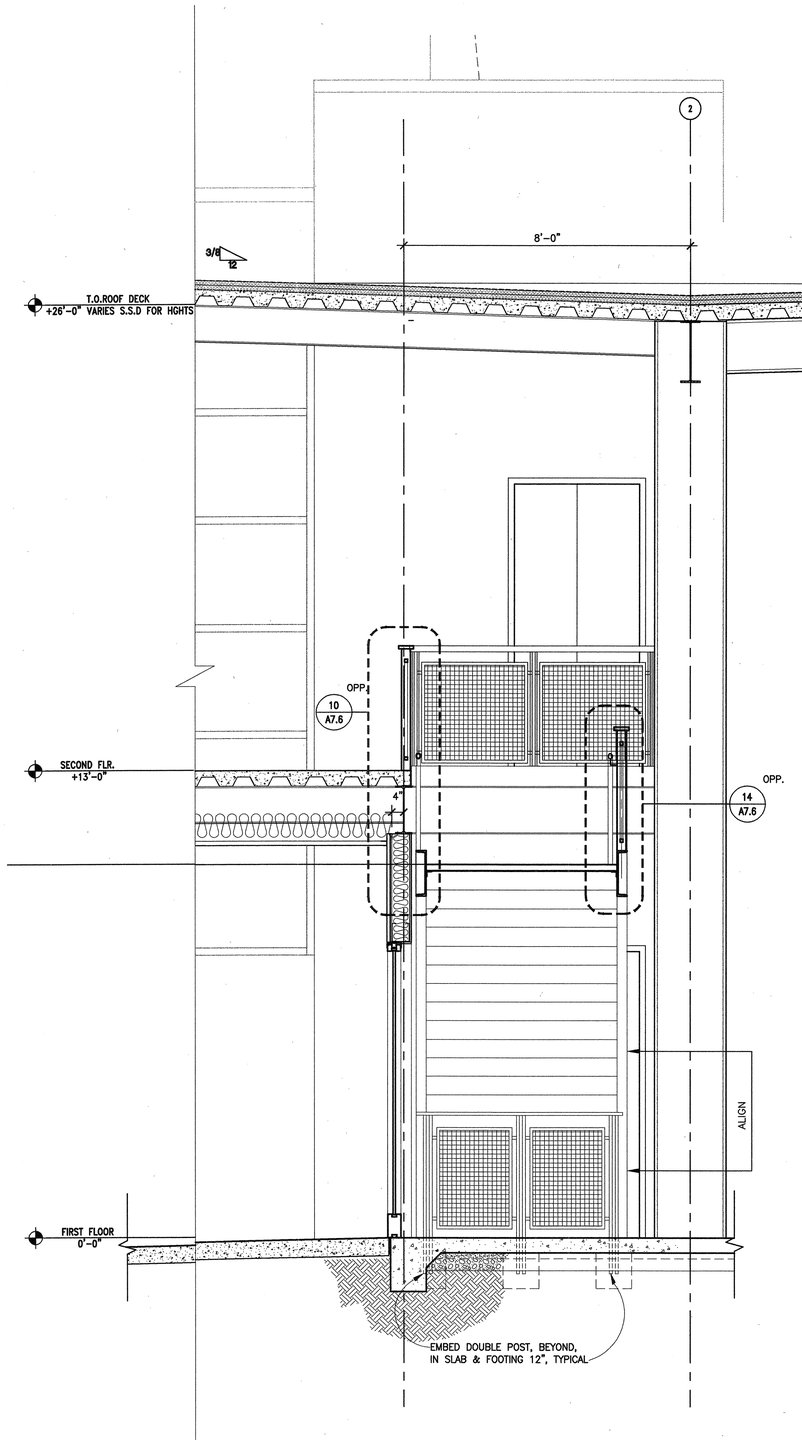

2 STAIR 1 SECTION (BEHIND STAIR)
1/2"=1'-0" STRSEC1

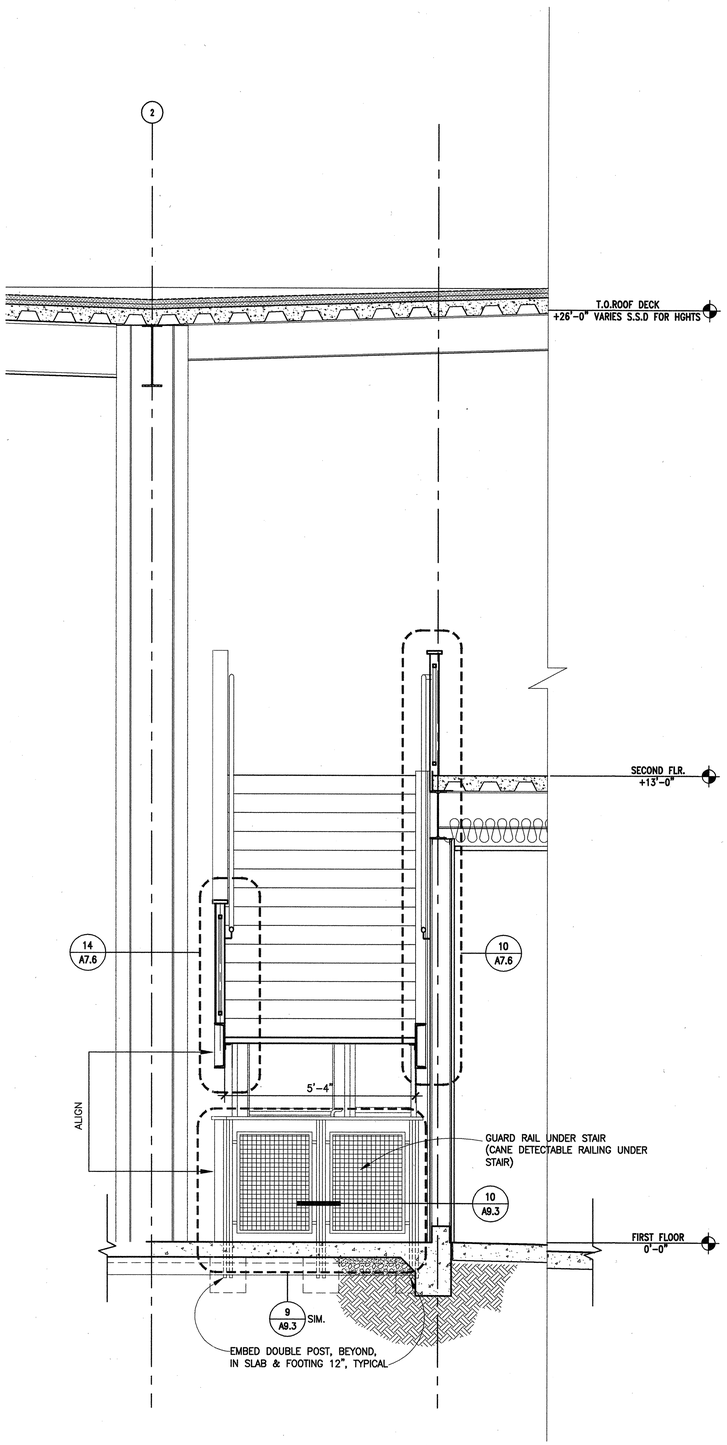

1 STAIR 1 SECTION (THRU STAIR)
1/2"=1'-0" STRSEC1

PLAN LEGEND

UNIT / 100	ROOM NAME / ROOM NUMBER
♿	INTERNATIONAL SYMBOL OF ACCESSIBILITY
1 A – H	PARTITION TYPES – SEE A9.1
100	DOOR NUMBER – SEE SCHEDULE: A11.1
100	WINDOW NUMBER – SEE SCHEDULE: A11.2/A11.3
100	LOUVER NUMBER – SEE SCHEDULE: A11.3
100	TOILET ACCESSORY SYMBOL –SEE SCHED.: A5.6
100	EQUIPMENT SYMBOL –SEE SCHEDULE: A11.5
CPT	FLOOR FINISH, SEE SCHEDULE A11.4, A11.5
	C.I.P. PARTITION – SSD
	1 HR. RATED WALL ASSEMBLY – SEE 8/A9.1
F.E.C.	FIRE EXTINGUISHER CABINET, DIMENSIONED TO CENTERLINE REF. 4/A9.2
DS	DOWN SPOUT FOR TYP. MOUNTING HEIGHT SEE 2/A3.20, 4/A8.3

GENERAL NOTES

1. ALL DIMENSIONS ARE FROM GRIDLINE, FACE OF FRAMING OR FACE OF CONC., U.O.N.
2. SEE SHEET A9.1 FOR PARTITION TYPES AND DETAILS.
3. SEE SHEET A11.1, A11.2 & A11.3 FOR DOOR AND WINDOW SCHEDULES.
4. SEE ENLARGED PLANS SHEETS A4.1 FOR ADDITIONAL DIMENSIONS, PARTITION TYPE SYMBOLS AND DOOR & WINDOW KEYS
5. SEE SHEETS A2.4 & A2.5 FOR FINISH PLAN
6. FOR STRUCTURAL STL. LOCATIONS & SIZES @ STAIR LANDINGS & STRINGERS –SSD. TYP.
7. SEE SHEET A5.6 & A11.5 FOR TOILET ACCESSORIES LIST & EQUIPMENT SCHEDULES.
8. SEE SHEET A8.1 FOR EXTERIOR WALL ASSEMBLY TYPES AND DETAILS.
9. REFER TO STRUCTURAL DRAWINGS FOR STEEL LOCATIONS AND SIZES AT LANDINGS AND STRINGERS

PLAN NORTH

0 1' 4' 8' 12'

BSA Architects
A California Corporation
350 PACIFIC AVENUE
SAN FRANCISCO, CA 94111
415-781-1526

DIABLO VALLEY COLLEGE

DIABLO VALLEY COLLEGE NEW BOOKSTORE

321 GOLF CLUB RD.
PLEASANT HILL, CALIFORNIA

© 2003 BSA Architects
"All drawings and written material appearing herein constitute the original and unpublished work of the architect and the same may not be duplicated, used, or disclosed without the written consent of the architect."

DATE: 23 JULY, 2004

REVISIONS:

LICENSED ARCHITECT JOHN ASHWORTH No. C26747 REN. 1-31-05 STATE OF CALIFORNIA

BID SET

SHEET TITLE:

ENLARGED STAIR PLANS & SECTION

IDENTIFICATION STAMP
DIVISION OF THE STATE ARCHITECT
105925
APPL 01
AC LE FLS ED SS A1
DATE: 5-12-04 JUL 2 6 2004

BLDG. ID: 098
ID CODE: 312098-109.01-A

DRAWN BY: GL/WC
CHECKED BY: GL
JOB NO: 0307.10

SHEET A7.3

8/11/03 A07-03.DWG

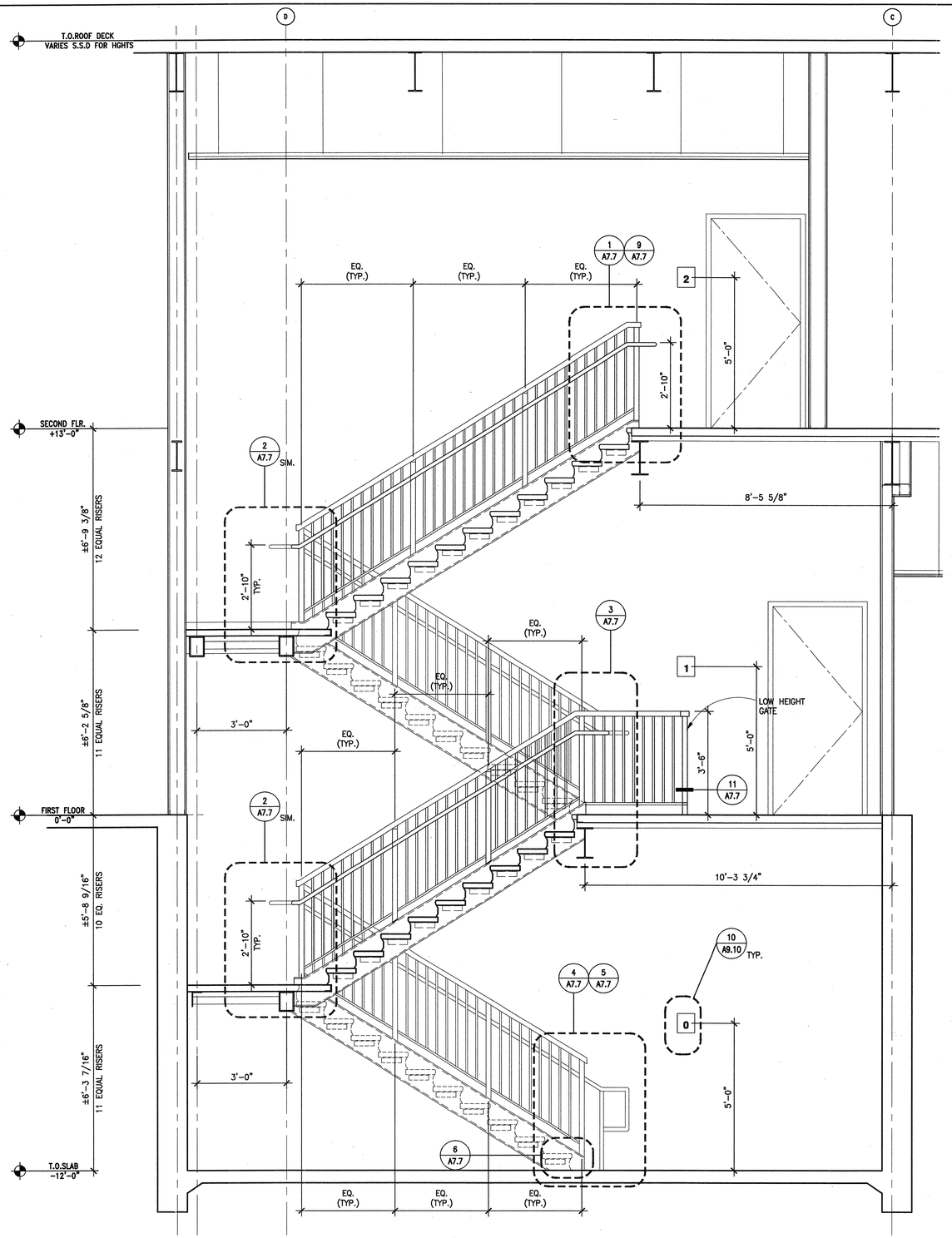

4 STAIR 2 SECTION
1/2"=1'-0"
STRSEC1

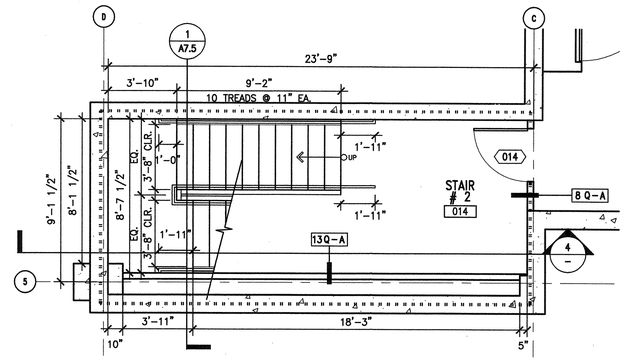

1 STAIR 2 -BASEMENT FLOOR PLAN
1/4"=1'-0"
PLAN-0

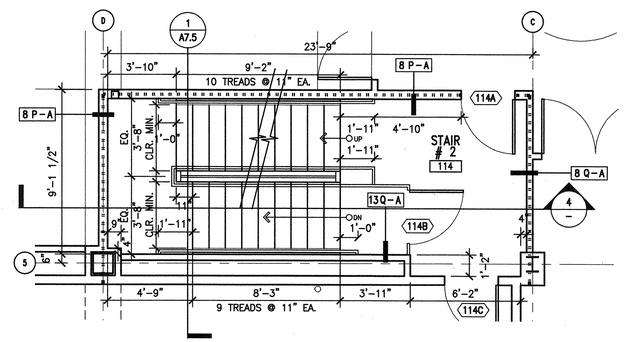

2 STAIR 2 -FIRST FLOOR PLAN
1/4"=1'-0"
PLAN-1

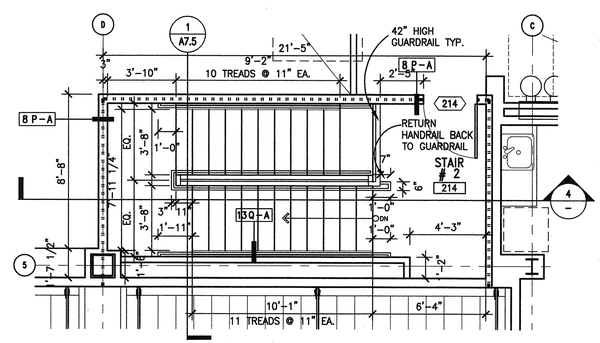

3 STAIR 2 -SECOND FLOOR PLAN
1/4"=1'-0"
PLAN-2

PLAN LEGEND

- UNIT — ROOM NAME
- 100 — ROOM NUMBER
- INTERNATIONAL SYMBOL OF ACCESSIBILITY
- 1 A-H — PARTITION TYPES – SEE A9.1
- 100 — DOOR NUMBER – SEE SCHEDULE: A11.1
- 100 — WINDOW NUMBER – SEE SCHEDULE: A11.2/A11.3
- 100 — LOUVER NUMBER – SEE SCHEDULE: A11.3
- 100 — TOILET ACCESSORY SYMBOL –SEE SCHED.: A5.6
- 100 — EQUIPMENT SYMBOL –SEE SCHEDULE: A11.5
- CPT — FLOOR FINISH, SEE SCHEDULE A11.4, A11.5
- C.I.P. PARTITION – SSD
- 1 HR. RATED WALL ASSEMBLY – SEE 8/A9.1
- [] F.E.C. — FIRE EXTINGUISHER CABINET, DIMENSIONED TO CENTERLINE REF. 4/A9.2
- ○ DS — DOWN SPOUT FOR TYP. MOUNTING HEIGHT SEE 2/A3.20, 4/A8.3

GENERAL NOTES

1. ALL DIMENSIONS ARE FROM GRIDLINE, FACE OF FRAMING OR FACE OF CONC., U.O.N.
2. SEE SHEET A9.1 FOR PARTITION TYPES AND DETAILS.
3. SEE SHEET A11.1, A11.2 & A11.3 FOR DOOR AND WINDOW SCHEDULES.
4. SEE ENLARGED PLANS SHEETS A4.1 FOR ADDITIONAL DIMENSIONS, PARTITION TYPE SYMBOLS AND DOOR & WINDOW KEYS
5. SEE SHEETS A2.4 & A2.5 FOR FINISH PLAN
6. FOR STRUCTURAL STL. LOCATIONS & SIZES @ STAIR LANDINGS & STRINGERS –SSD. TYP.
7. SEE SHEET A5.6 & A11.5 FOR TOILET ACCESSORIES LIST & EQUIPMENT SCHEDULES.
8. SEE SHEET A8.1 FOR EXTERIOR WALL ASSEMBLY TYPES AND DETAILS.
9. REFER TO STRUCTURAL DRAWINGS FOR STEEL LOCATIONS AND SIZES AT LANDINGS AND STRINGERS

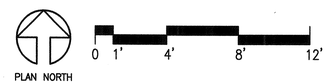

BSA Architects
A California Corporation
350 PACIFIC AVENUE
SAN FRANCISCO, CA 94111
415-781-1526

DIABLO VALLEY COLLEGE

DIABLO VALLEY COLLEGE NEW BOOKSTORE

321 GOLF CLUB RD.
PLEASANT HILL, CALIFORNIA

© 2003 BSA Architects
"All drawings and written material appearing herein constitute the original and unpublished work of the architect and the same may not be duplicated, used, or disclosed without the written consent of the architect."

DATE: 23 JULY, 2004

REVISIONS:

LICENSED ARCHITECT JOHN ASHWORTH No. C26747 REN. 1-31-05 STATE OF CALIFORNIA

BID SET

SHEET TITLE:

ENLARGED STAIR PLANS & SECTION

IDENTIFICATION STAMP
DIVISION OF THE STATE ARCHITECT
105925
APPL 01
AC VE FLS ED SS AI
DATE: 5-12-04 JUL 26 2004

BLDG. ID: 098
ID CODE: 312098-109.01-A

DRAWN BY: GL/WC
CHECKED BY: GL
JOB NO: 0307.10

SHEET A7.4

A07-04.DWG
8/11/03

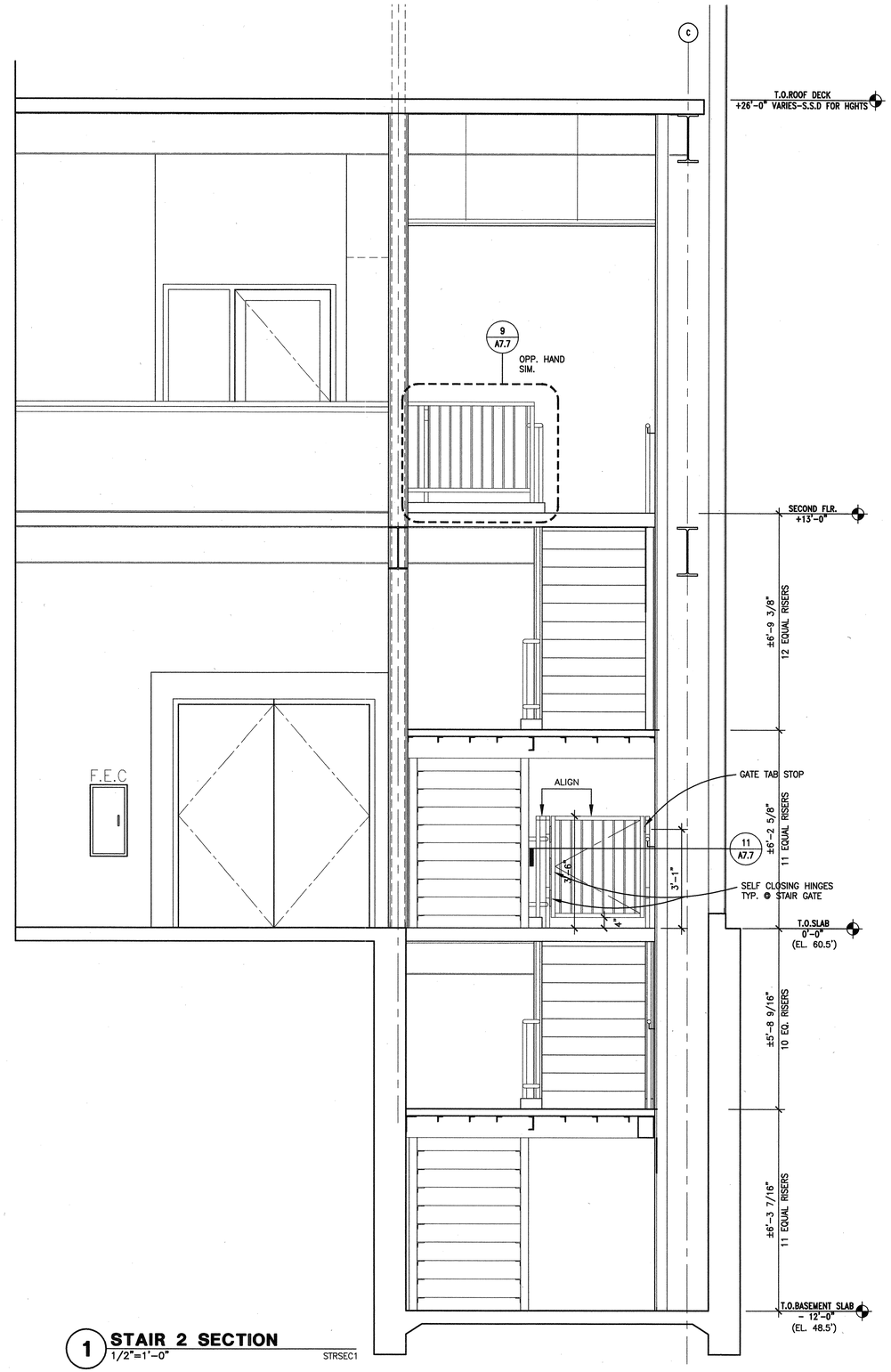

1 STAIR 2 SECTION

1/2"=1'-0"

STRSEC1

PLAN LEGEND

UNIT — ROOM NAME
100 — ROOM NUMBER

INTERNATIONAL SYMBOL OF ACCESSIBILITY

1 A-H — PARTITION TYPES – SEE A9.1

100 — DOOR NUMBER – SEE SCHEDULE: A11.1

100 — WINDOW NUMBER – SEE SCHEDULE: A11.2/A11.3

100 — LOUVER NUMBER – SEE SCHEDULE: A11.3

100 — TOILET ACCESSORY SYMBOL –SEE SCHED.: A5.6

100 — EQUIPMENT SYMBOL –SEE SCHEDULE: A11.5

CPT — FLOOR FINISH, SEE SCHEDULE A11.4, A11.5

C.I.P. PARTITION – SSD

1 HR. RATED WALL ASSEMBLY – SEE 8/A9.1

F.E.C. — FIRE EXTINGUISHER CABINET, DIMENSIONED TO CENTERLINE REF. 4/A9.2

DS — DOWN SPOUT FOR TYP. MOUNTING HEIGHT SEE 2/A3.20, 4/A8.3

GENERAL NOTES

1. ALL DIMENSIONS ARE FROM GRIDLINE, FACE OF FRAMING OR FACE OF CONC., U.O.N.
2. SEE SHEET A9.1 FOR PARTITION TYPES AND DETAILS.
3. SEE SHEET A11.1, A11.2 & A11.3 FOR DOOR AND WINDOW SCHEDULES.
4. SEE ENLARGED PLANS SHEETS A4.1 FOR ADDITIONAL DIMENSIONS, PARTITION TYPE SYMBOLS AND DOOR & WINDOW KEYS
5. SEE SHEETS A2.4 & A2.5 FOR FINISH PLAN
6. FOR STRUCTURAL STL. LOCATIONS & SIZES @ STAIR LANDINGS & STRINGERS –SSD. TYP.
7. SEE SHEET A5.6 & A11.5 FOR TOILET ACCESSORIES LIST & EQUIPMENT SCHEDULES.
8. SEE SHEET A8.1 FOR EXTERIOR WALL ASSEMBLY TYPES AND DETAILS.
9. REFER TO STRUCTURAL DRAWINGS FOR STEEL LOCATIONS AND SIZES AT LANDINGS AND STRINGERS

PLAN NORTH

0 1' 4' 8' 12'

BSA
Architects
A California Corporation
350 PACIFIC AVENUE
SAN FRANCISCO, CA 94111
415-781-1526

DIABLO VALLEY COLLEGE

DIABLO VALLEY COLLEGE NEW BOOKSTORE

321 GOLF CLUB RD.
PLEASANT HILL, CALIFORNIA

© 2003 BSA Architects
"All drawings and written material appearing herein constitute the original and unpublished work of the architect and the same may not be duplicated, used, or disclosed without the written consent of the architect."

DATE: 23 JULY, 2004

REVISIONS:

LICENSED ARCHITECT
JOHN ASHWORTH
No. C26747
REN. 1-31-05
STATE OF CALIFORNIA

BID SET

SHEET TITLE:

STAIR SECTION

IDENTIFICATION STAMP
DIVISION OF THE STATE ARCHITECT
105925
APPL 01
AC LE FLS EO SS AA
DATE: 5-12-04 JUL 2 6 2004

BLDG. ID: 098
ID CODE: 312098-109.01-A

DRAWN BY: GL/WC
CHECKED BY: GL
JOB NO: 0307.10

SHEET
A7.5

8/11/03 A07-05.DWG

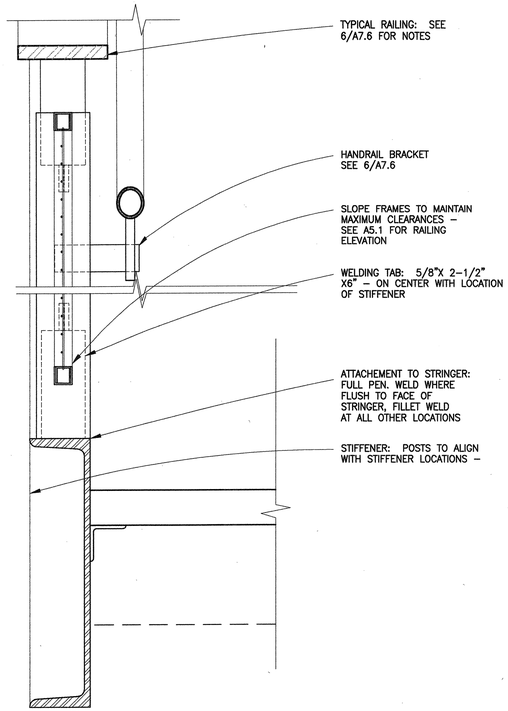

14 TYP. STAIR RAIL POST @ STAIR NO.1

SCALE: 3"=1'-0"

STRRAL1

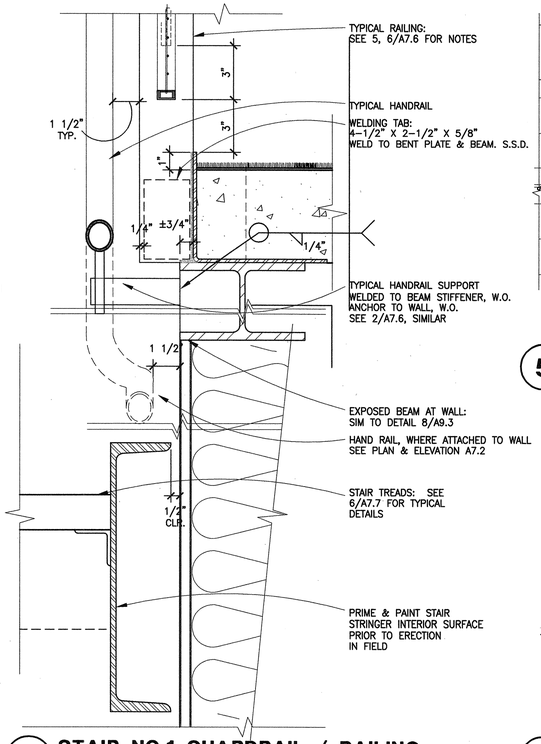

10 STAIR NO.1 GUARDRAIL / RAILING

SCALE: 3"=1'-0"

STR1GRR

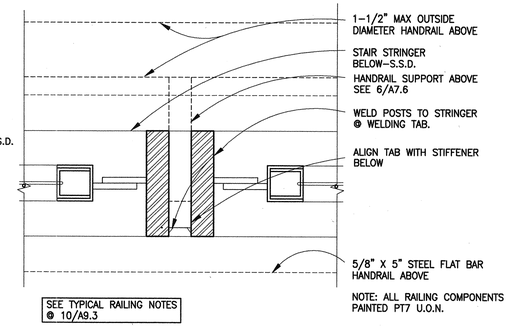

5 PLAN DETAIL @ STAIR RAILING

SCALE: 6"=1'-0"

SRLMSHP1

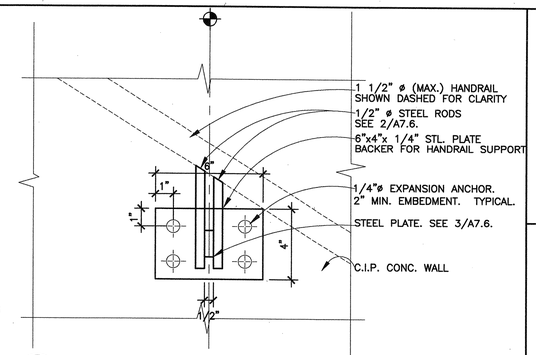

1 HANDRAIL ATTACHMENT BRACKET ELEVATION @ CONC.

SCALE: 3"=1'-0"

strrla6

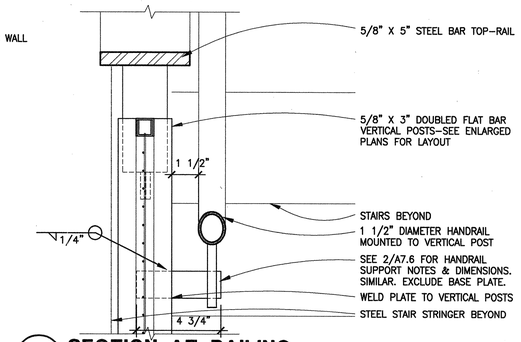

6 SECTION AT RAILING

SCALE: 3"=1'-0"

SRLMSHS1

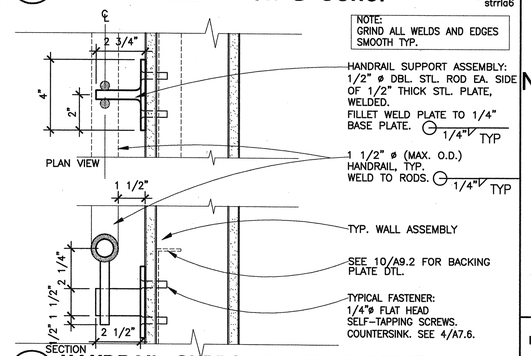

2 HANDRAIL SUPPORT ATTACHMENT @ WALL (STAIR No.1)

SCALE: 3"=1'-0"

strrla1

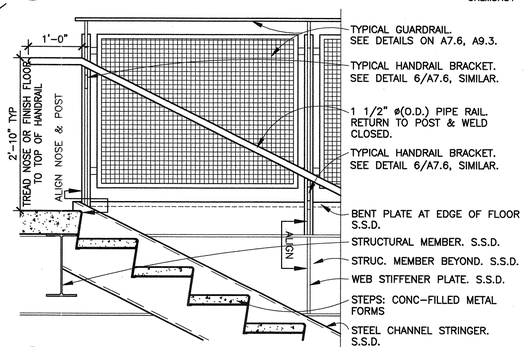

7 RAIL CONDITION: TOP OF STAIR

SCALE: 3/4"=1'-0"

STR1TOPR

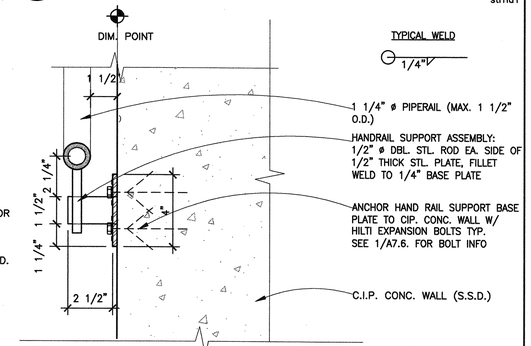

3 HANDRAIL ATTACHMENT SUPPORT @ C.I.P. CONC. WALL

SCALE: 3"=1'-0"

strrla2

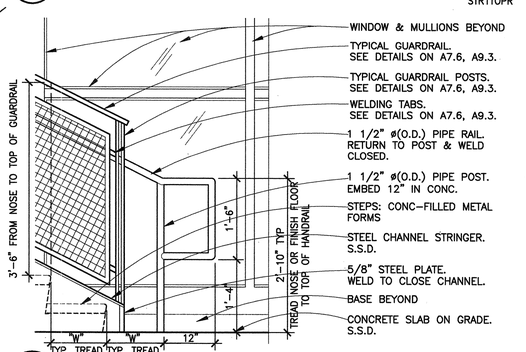

8 RAIL CONDITION: BOTTOM OF STAIR

SCALE: 3/4"=1'-0"

STR1BOTR

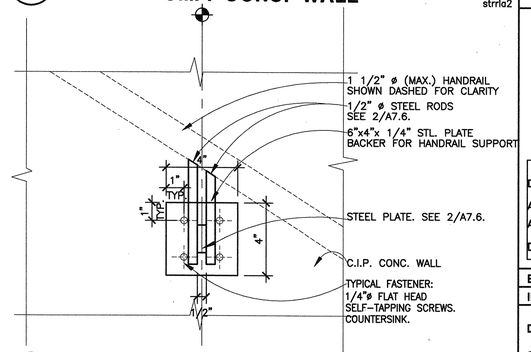

4 HANDRAIL BRACKET ELEVATION AT METAL STUD WALL

SCALE: 3"=1'-0"

strrla1b

NOT USED 15

NOT USED 11

NOT USED 16

NOT USED 12

8/27/03 A07-06.DWG

BSA Architects
A California Corporation
350 PACIFIC AVENUE
SAN FRANCISCO, CA 94111
415-781-1526

DIABLO VALLEY COLLEGE

DIABLO VALLEY COLLEGE NEW BOOKSTORE

321 GOLF CLUB RD.
PLEASANT HILL, CALIFORNIA

© 2003 BSA Architects
"All drawings and written material appearing herein constitute the original and unpublished work of the architect and the same may not be duplicated, used, or disclosed without the written consent of the architect."

DATE: 23 JULY, 2004

REVISIONS:

LICENSED ARCHITECT JOHN ASHWORTH No. C26747 REN. 1-31-05 STATE OF CALIFORNIA

BID SET

SHEET TITLE:

STAIR # 1 DETAILS

IDENTIFICATION STAMP
DIVISION OF THE STATE ARCHITECT
105925
APPL 01
AC LE FLS ED SS 41
DATE: 5-12-04 JUL 26 2004

BLDG. ID: 098
ID CODE: 312098-109.01-A

DRAWN BY: WC/JH
CHECKED BY: JA
JOB NO: 0307

SHEET A7.6

NOT USED 13

NOT USED 14

NOT USED 15

NOT USED 16

NOT USED 12

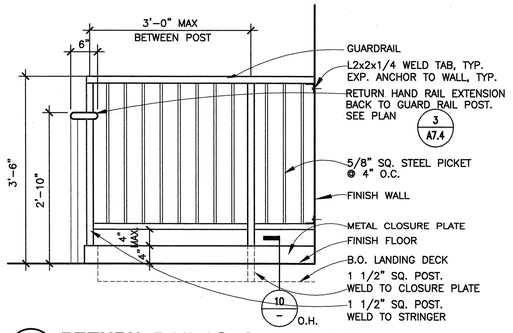

9 RETURN RAIL @ GUARD RAIL

SCALE: 3/4"=1'-0"

IGURCON1

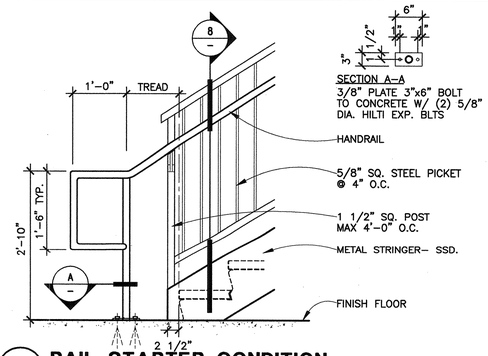

5 RAIL STARTER CONDITION

SCALE: 3/4"=1'-0"

IRALSTA2

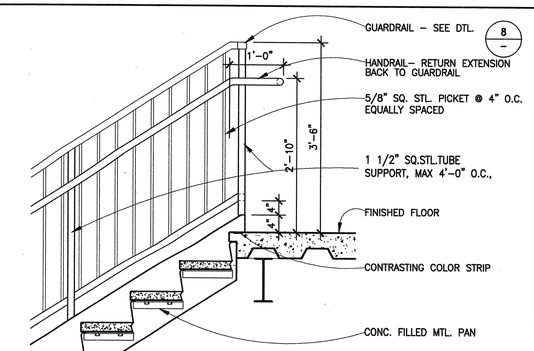

1 RAILING CONDITION @ TOP FLOOR

SCALE: 3/4"=1'-0"

ISTARAL3

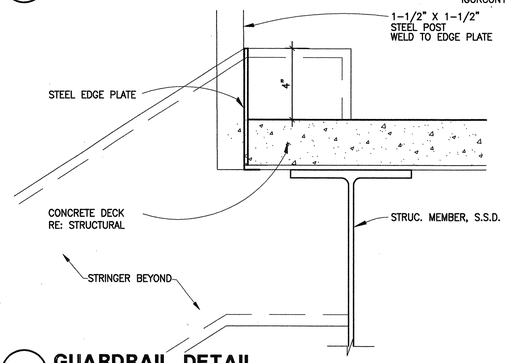

10 GUARDRAIL DETAIL

SCALE: 3"=1'-0"

Sgrdral1

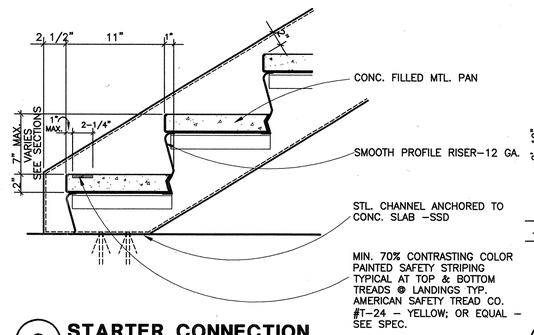

6 STARTER CONNECTION

SCALE: 1 1/2"=1'-0"

ISTAPOS1

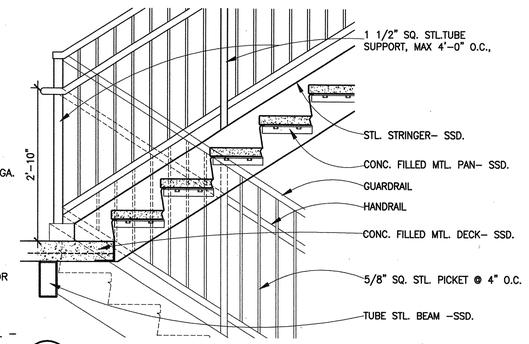

2 RAILING CONDITION @ MID LANDING, TYP.

SCALE: 3/4"=1'-0"

ISTARAL1

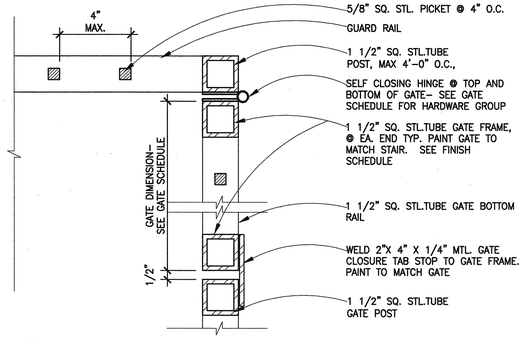

11 GATE @ STAIR No. 2

SCALE: 3"=1'-0"

ISTAGAT1

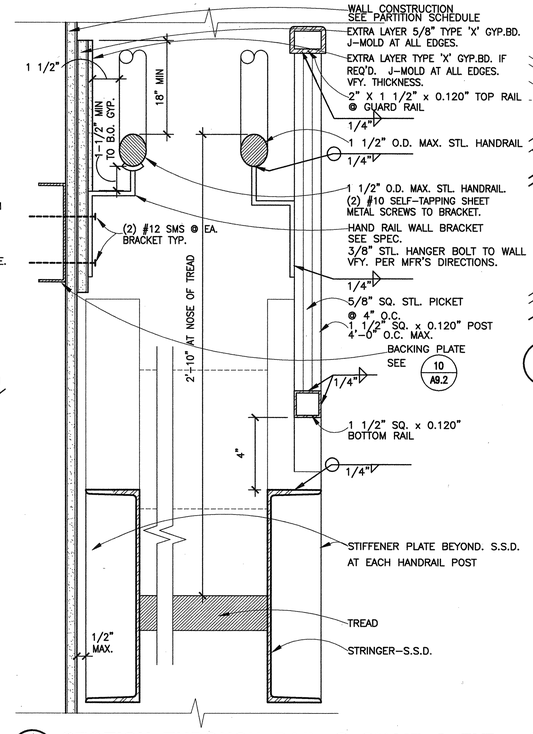

8 SECTION THROUGH RAIL @ STAIR 2 TYP.

SCALE: 3"=1'-0"

ISECPOS1

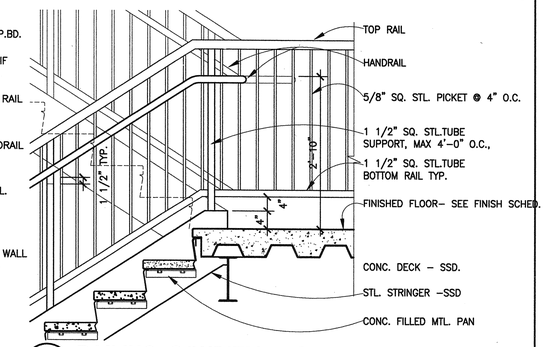

3 RAILING CONDITION @ FLOOR, TYP.

SCALE: 3/4"=1'-0"

ISTARAL2

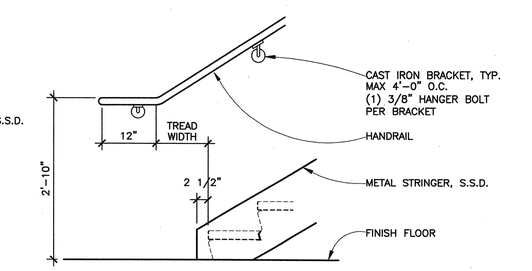

4 HANDRAIL ELEVATION @ WALL

SCALE: 3/4"=1'-0"

IRALSTA1

8/27/03 A07-07.DWG

BSA
Architects
A California Corporation
350 PACIFIC AVENUE
SAN FRANCISCO, CA 94111
415–781–1526

DIABLO VALLEY COLLEGE

DIABLO VALLEY COLLEGE NEW BOOKSTORE

321 GOLF CLUB RD.
PLEASANT HILL, CALIFORNIA

© 2003 BSA Architects
"All drawings and written material appearing herein constitute the original and unpublished work of the architect and the same may not be duplicated, used, or disclosed without the written consent of the architect."

DATE: 23 JULY, 2004

REVISIONS:

LICENSED ARCHITECT
JOHN A. SHROPSHIRE
No. C26747
REN. 1-31-05
STATE OF CALIFORNIA

BID SET

SHEET TITLE:

STAIR # 2 & MISC. DETAILS

IDENTIFICATION STAMP
DIVISION OF THE STATE ARCHITECT
105925
APPL 01
AC LE FLS EQ SS A1
DATE: 5-12-04 JUL 26 2004

BLDG. ID: 098
ID CODE: 312098–109.01–A

DRAWN BY: WC/GL
CHECKED BY: JA
JOB NO: 0307

SHEET
A7.7

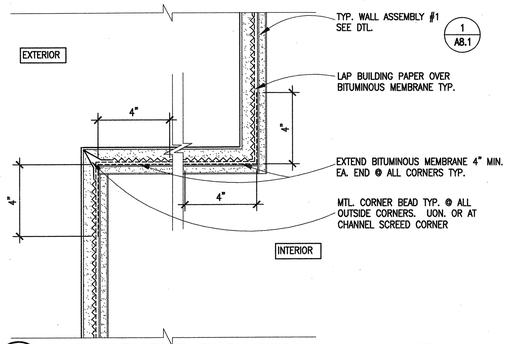

13 TYP. CEMENT PLASTER EXT. CORNER

SCALE: 3"=1'-0"

ESTUCOR1

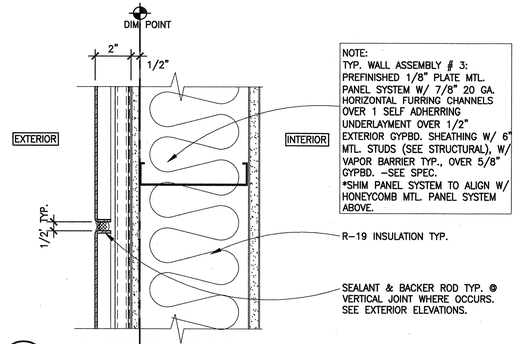

9 TYP. WALL ASSEMBLY No: 3

SCALE: 3"=1'-0"

EWALASS3

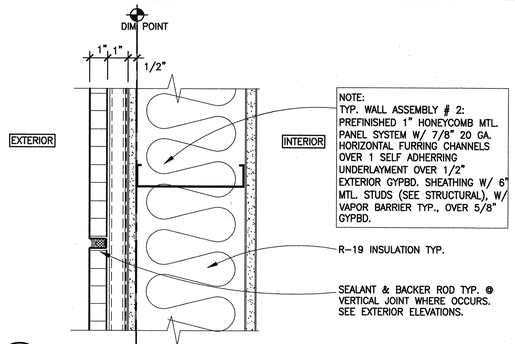

5 TYP. WALL ASSEMBLY No: 2

SCALE: 3"=1'-0"

EWALASS2

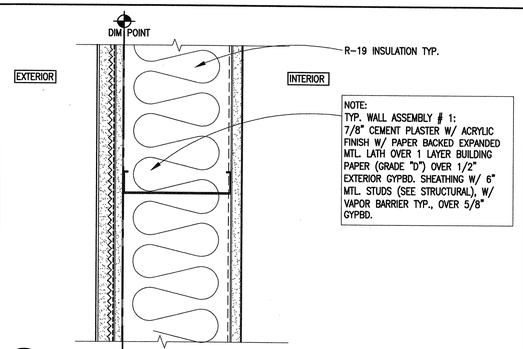

1 TYP. WALL ASSEMBLY No: 1

SCALE: 3"=1'-0"

EWALASS1

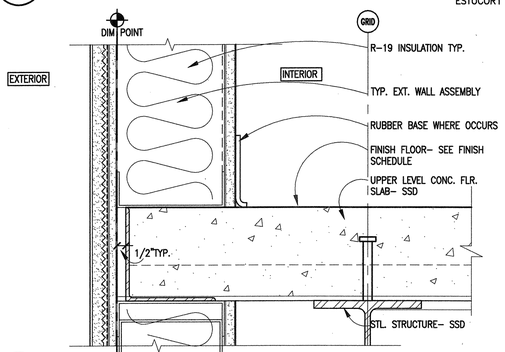

14 TYP. UPPER FLR. SLAB EDGE

SCALE: 3"=1'-0"

ESLBEDG1

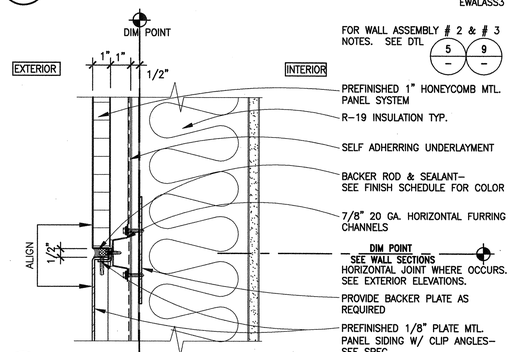

10 HOR. JOINT @HONEYCOMB & PLATE MTL. PANEL SIDING TRANSITION

SCALE: 3"=1'-0"

EPNLJT1

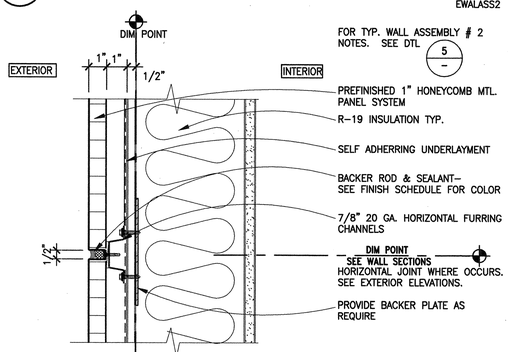

6 TYP. EXT. MTL. PANEL HOR. JOINT

SCALE: 3"=1'-0"

ESIDFST1

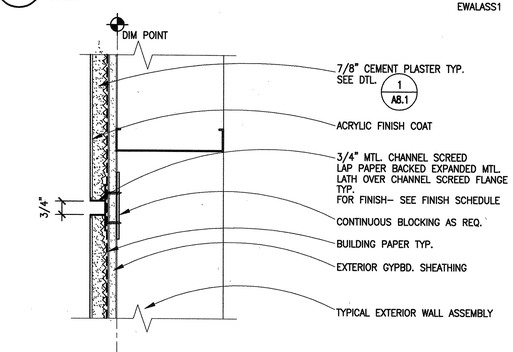

2 TYP. CEM. PLASTER CHANNEL SCREED JT.

SCALE: 3"=1'-0" (PLAN DETAIL)

ECHSCRD1

NOT USED

15

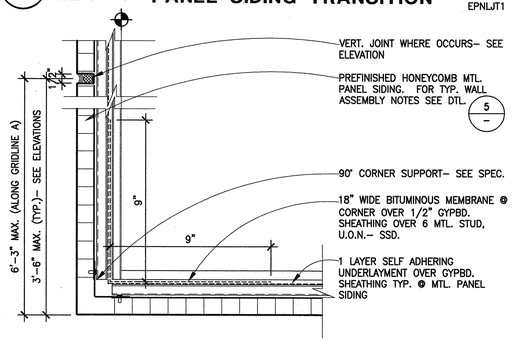

11 EXT. METAL PANEL SIDING-OUTSIDE CORNER

SCALE: 3"=1'-0" (PLAN DETAIL)- PLATE MTL. SIDING DTL. SIMILAR

EMPOCR1

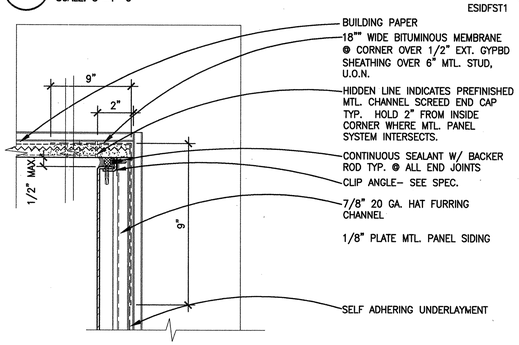

7 EXT. MTL. SIDING TO STUCCO CORNER

SCALE: 3"=1'-0" (PLAN DETAIL) HONEYCOMB MTL. PANEL SIDING SIMILAR

EMPNICR1

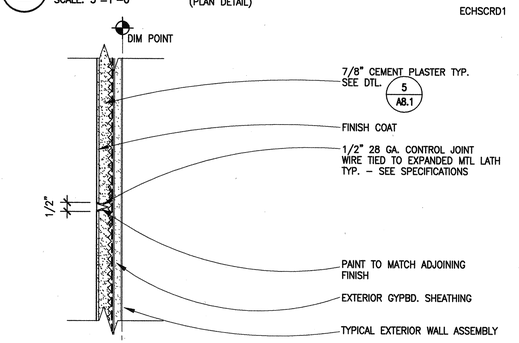

3 TYP. CEMENT PLASTER CONTROL JT.

SCALE: 3"=1'-0" (PLAN DETAIL)

ECTRLJT2

NOT USED

16

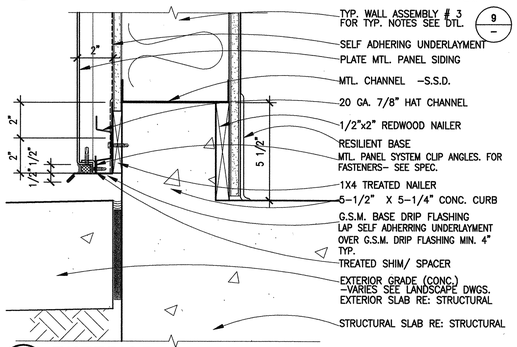

12 EXTERIOR CURB SILL @ MTL. SIDING

SCALE: 3"=1'-0"

ECRBSIL2

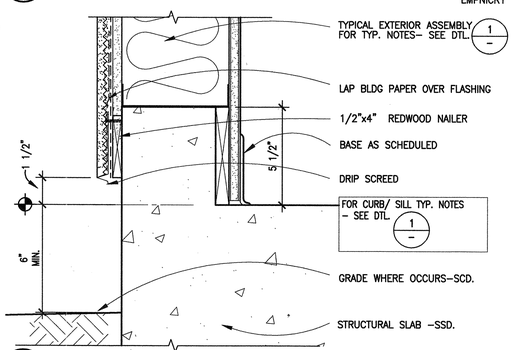

8 EXTERIOR CURB SILL @ STUCCO WALL

SCALE: 3"=1'-0"

ECRBSILB

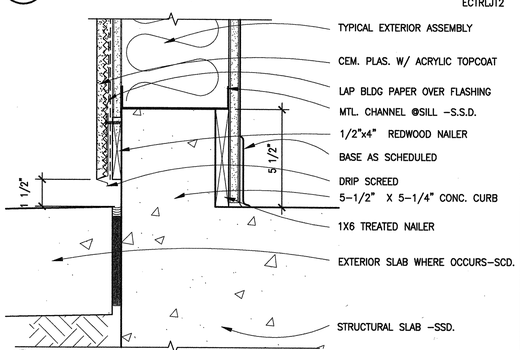

4 EXTERIOR CURB SILL @ STUCCO WALL

SCALE: 3"=1'-0"

ECRBSILA

11/4/03 A08-01.DWG

BSA Architects
A California Corporation
350 PACIFIC AVENUE
SAN FRANCISCO, CA 94111
415-781-1526

DIABLO VALLEY COLLEGE

DIABLO VALLEY COLLEGE NEW BOOKSTORE

321 GOLF CLUB RD.
PLEASANT HILL, CALIFORNIA

© 2003 BSA Architects
"All drawings and written material appearing herein constitute the original and unpublished work of the architect and the same may not be duplicated, used, or disclosed without the written consent of the architect."

DATE: 23 JULY, 2004

REVISIONS:

LICENSED ARCHITECT JOHN ASHWORTH No. C26747 REN. 1-31-05 STATE OF CALIFORNIA

BID SET

SHEET TITLE:

EXTERIOR DETAILS: WALL ASSEMBLIES

IDENTIFICATION STAMP
DIVISION OF THE STATE ARCHITECT
105925
APPL 01
AC LE FLS ED SS A-1
DATE: 5-12-04 JUL 26 2004

BLDG. ID: 098
ID CODE: 312098-109.01-A

DRAWN BY: GL
CHECKED BY: GL
JOB NO: 0307.10

SHEET A8.1

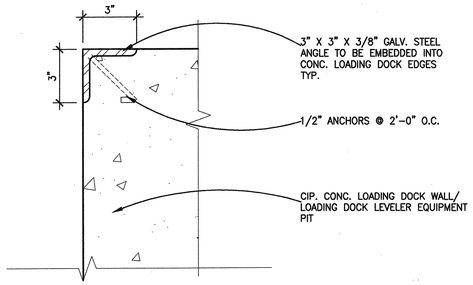

13 EDGE PROTECTION @ LOADING DOCK

SCALE: 3"=1'-0"

ECIPEDGE

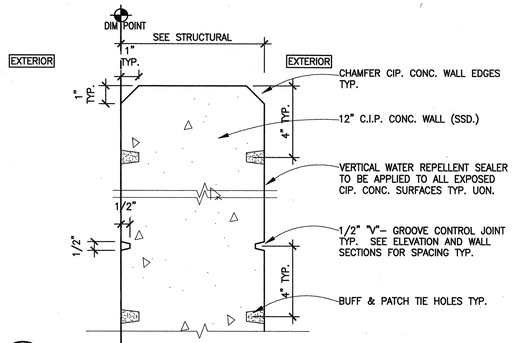

9 TYP. WALL ASSEMBLY No: 6

SCALE: 3"=1'-0" (SECTION DETAIL)

EWALASS6

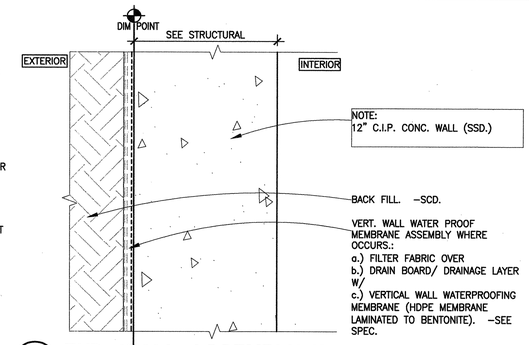

5 TYP. WALL ASSEMBLY No: 5

SCALE: 3"=1'-0" (PLAN DETAIL)

EWALASS5

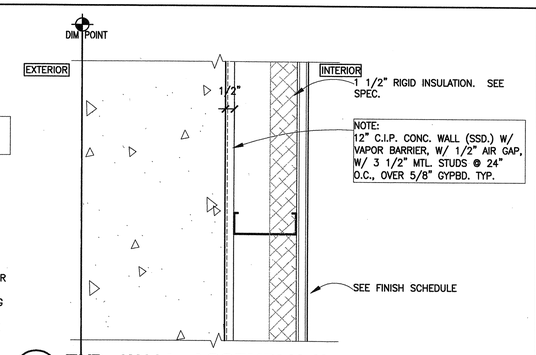

1 TYP. WALL ASSEMBLY No: 4

SCALE: 3"=1'-0" (PLAN DETAIL)

EWALASS4

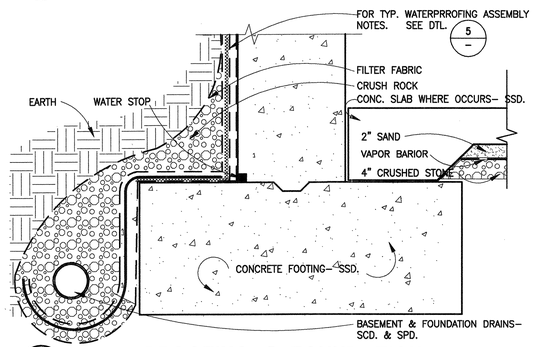

14 WATERPROOFING @ FOUNDATION DTL.

SCALE: 1 1/2"=1'-0"

EFTNGWP1

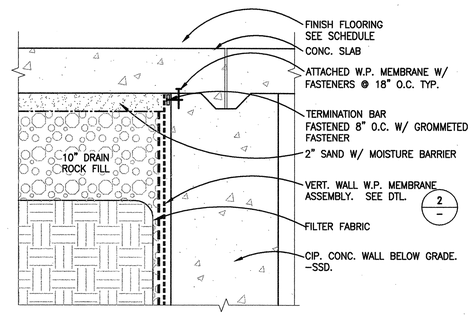

10 VERT./HORIZ. FLOOR SLAB TRANSITION

SCALE: 1 1/2"=1'-0"

ETRNWPM4

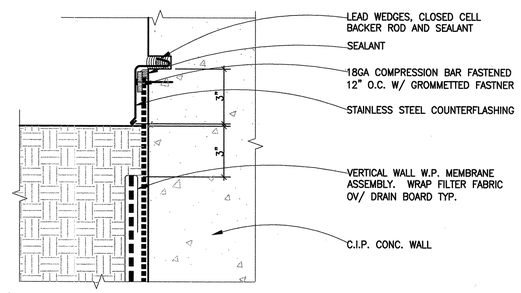

6 W.P. MEMBRANE TERMINATION @ CIP. WALL

SCALE: 3"=1'-0"

EWALWPM5

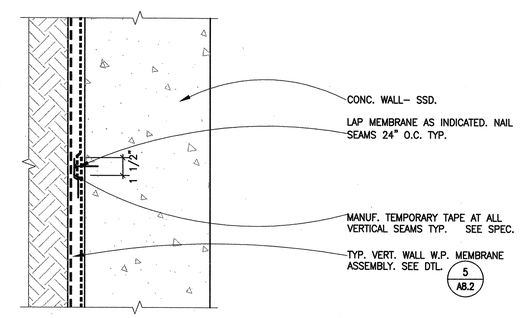

2 TYP. CONC. WALL MEMBRANE LAP

SCALE: 3"=1'-0"

EWALJNT1

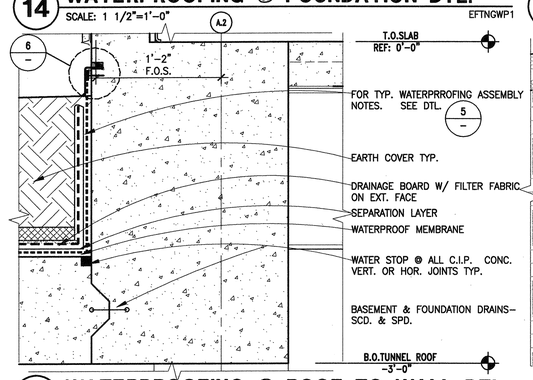

15 WATERPROOFING @ ROOF TO WALL DTL.

SCALE: 1 1/2"=1'-0"

EDCKWP9

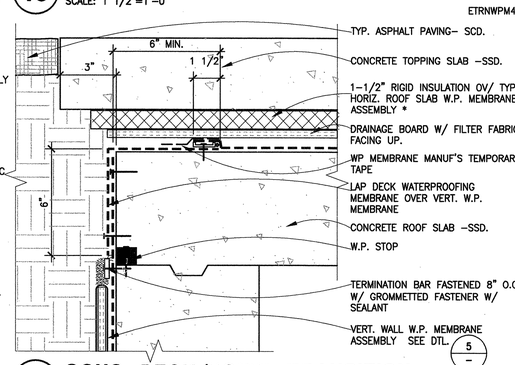

11 CONC. DECK/HORIZ. TRANSITION

SCALE: 3"=1'-0"

EDCKWPM2

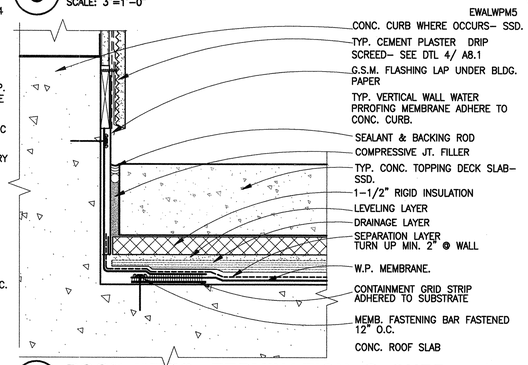

7 ROOF WPFG. TERMINATION @ CURB

SCALE: 3"=1'-0"

EDCKWPM8

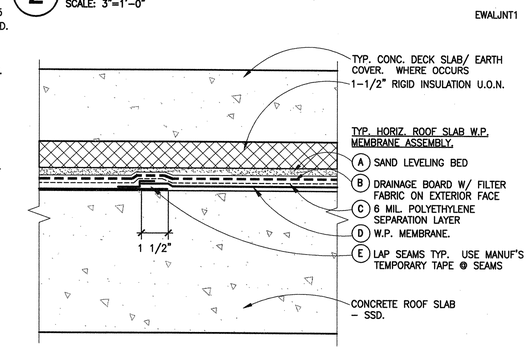

3 TYP. CONC. DECK ROOFING ASSEMBLY

SCALE: 3"=1'-0"

EDCKWPM6

NOT USED

16

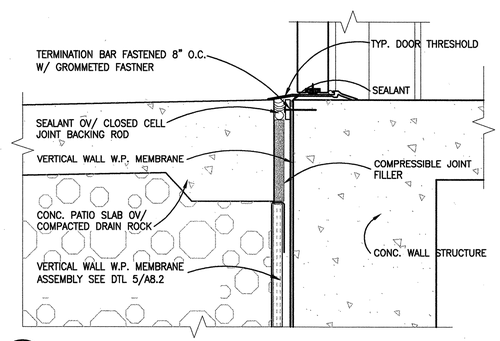

12 EXTERIOR SLAB @ DOOR THRESHOLD

SCALE: 3"=1'-0"

EDORWPM1

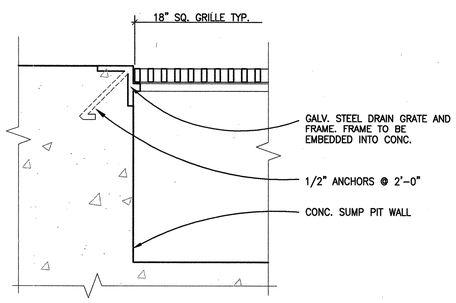

8 DRAIN GRATE ANCHOR @ ELEV. SUMP PIT

SCALE: 3"=1'-0"

IELVPIT1

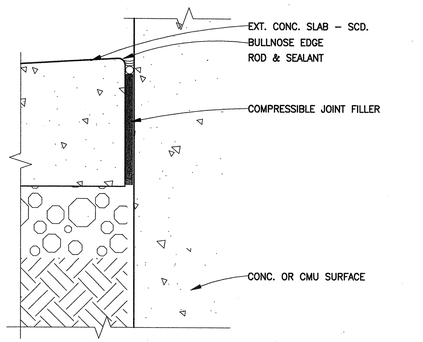

4 EXTERIOR PAVING @ SLAB

SCALE: 3"=1'-0"

EEXPJNT1

11/4/03 A08-02.DWG

BSA Architects
A California Corporation
350 PACIFIC AVENUE
SAN FRANCISCO, CA 94111
415-781-1526

DIABLO VALLEY COLLEGE

DIABLO VALLEY COLLEGE NEW BOOKSTORE

321 GOLF CLUB RD.
PLEASANT HILL, CALIFORNIA

© 2003 BSA Architects
"All drawings and written material appearing herein constitute the original and unpublished work of the architect and the same may not be duplicated, used, or disclosed without the written consent of the architect."

DATE: 23 JULY, 2004

REVISIONS:

LICENSED ARCHITECT GORAN ASHWORTH No. C26747 REN. 1-31-06 STATE OF CALIFORNIA

BID SET

SHEET TITLE:

EXTERIOR DETAILS: FOUNDATION & BASEMENT

IDENTIFICATION STAMP
DIVISION OF THE STATE ARCHITECT
APPL 01 105925
AC LE FLS EO SS A1
DATE: 5-12-04 JUL 2 0 2004

BLDG. ID: 098
ID CODE: 312098-109.01-A

DRAWN BY:
CHECKED BY: GL
JOB NO: 0307.10

SHEET A8.2

NOT USED

13

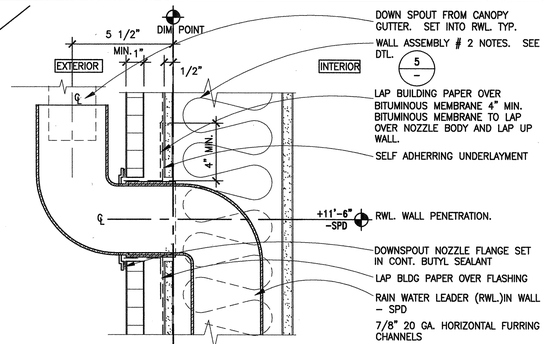

9 TYP. RWL. PENETRATION @ MTL. SIDING
SCALE: 3"=1'-0"
EERWLWAL1

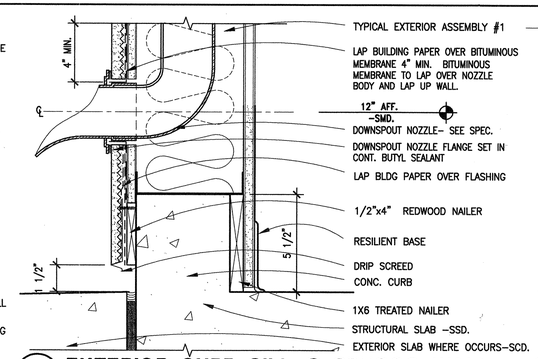

5 EXTERIOR CURB SILL @ STUCCO WALL
SCALE: 3"=1'-0"
EOVRDRN1

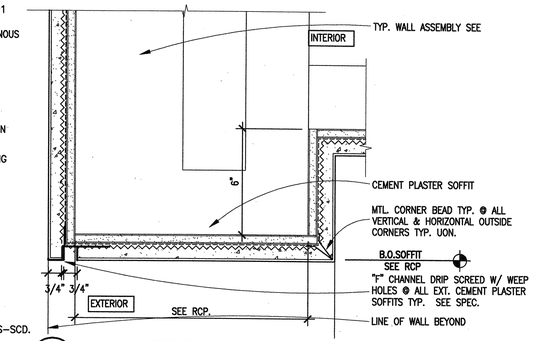

1 DRIP STOP @ CEMENT PLASTER SOFFIT
SCALE: 3"=1'-0"
ESTUCOR2

NOT USED

14

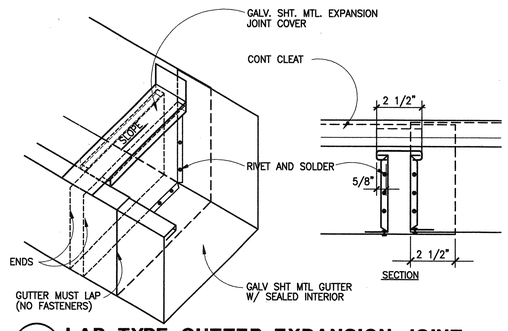

6 LAP TYPE GUTTER EXPANSION JOINT
SCALE: NO SCALE
EEXPGUT1

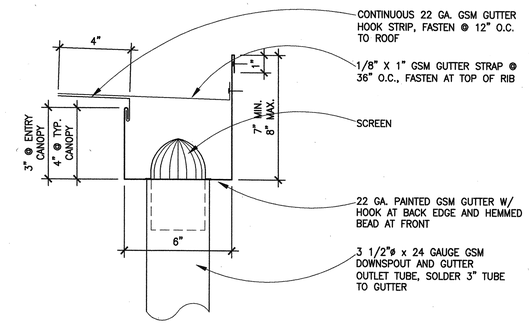

2 TYPICAL GUTTER SECTION
SCALE: 3"=1'-0"
EGUTSEC1

NOT USED

10

NOT USED

15

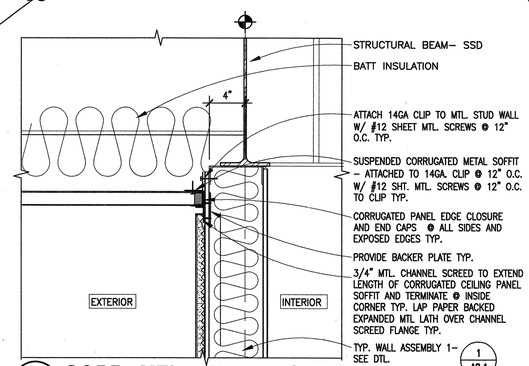

11 CORR. MTL. SOFFIT @ EXT. WALL
SCALE: 1 1/2"=1'-0"
ECORSOF2

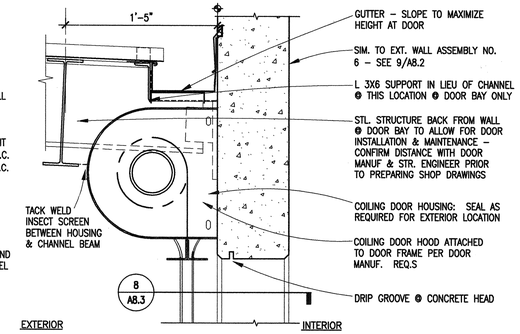

7 COILING DOOR HEAD @ CONCRETE WALL
SCALE: 1 1/2"=1'-0"
CODRHEAD

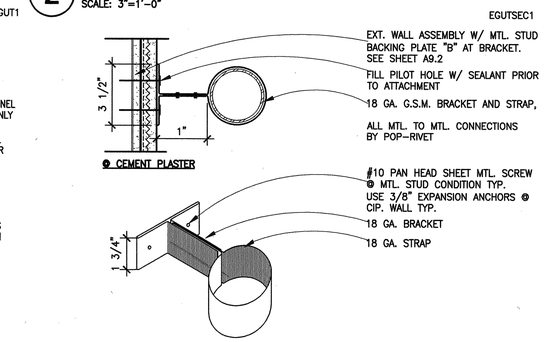

3 DOWNSPOUT BRACKET
SCALE: 3"=1'-0"
ERAINLD2

NOT USED

16

NOT USED

12

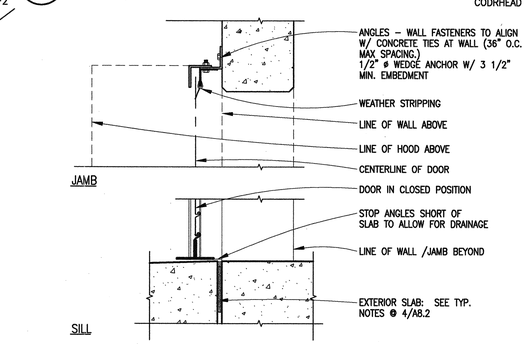

8 COILING DOOR JAMB/SILL @ CONC. WALL
SCALE: 1 1/2"=1'-0"
CODRJMSL

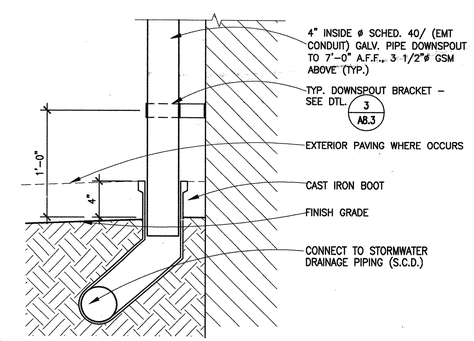

4 SECTION - DOWNSPOUT @ BOOT
SCALE: 1 1/2"=1'-0"
ERAINLD1

9/11/03 A08-03.DWG

BSA Architects
A California Corporation
350 PACIFIC AVENUE
SAN FRANCISCO, CA 94111
415-781-1526

DIABLO VALLEY COLLEGE

DIABLO VALLEY COLLEGE NEW BOOKSTORE

321 GOLF CLUB RD.
PLEASANT HILL, CALIFORNIA

© 2003 BSA Architects
"All drawings and written material appearing herein constitute the original and unpublished work of the architect and the same may not be duplicated, used, or disclosed without the written consent of the architect."

DATE: 23 JULY, 2004

REVISIONS:

LICENSED ARCHITECT JOHN ASHWORTH No. C26747 REN. 1-31-05 STATE OF CALIFORNIA

BID SET

SHEET TITLE:
EXTERIOR DETAILS

IDENTIFICATION STAMP
DIVISION OF THE STATE ARCHITECT
105925
APPL 01
AC LE FLS EO SS #1
DATE: 5-12-04 JUL 26 2004

BLDG. ID: 098
ID CODE: 312098-109.01-A

DRAWN BY: GL/JH/
CHECKED BY: GL
JOB NO: 0307.10

SHEET A8.3

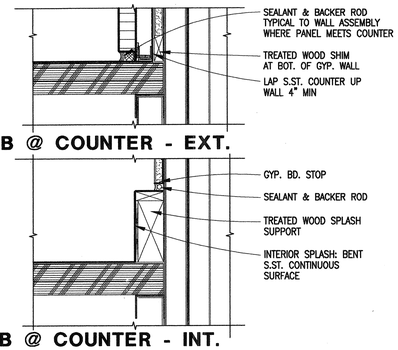

A. JAMB @ COUNTER - EXT.

B. JAMB @ COUNTER - INT.

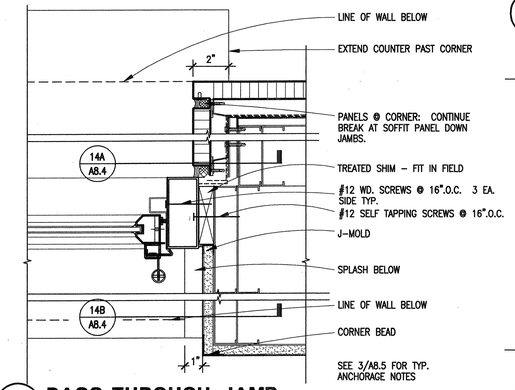

14 PASS-THROUGH JAMB
SCALE: 3"=1'-0"
PTTRJAM

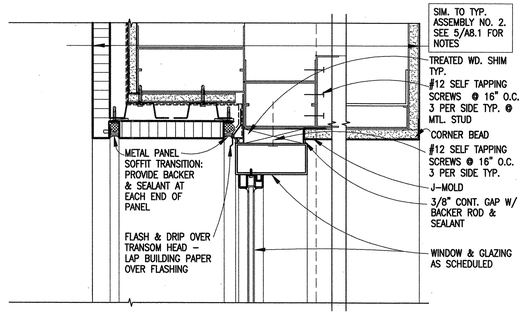

9 PASS-THROUGH TRANSOM HEAD
SCALE: 3"=1'-0"
PTTRHED

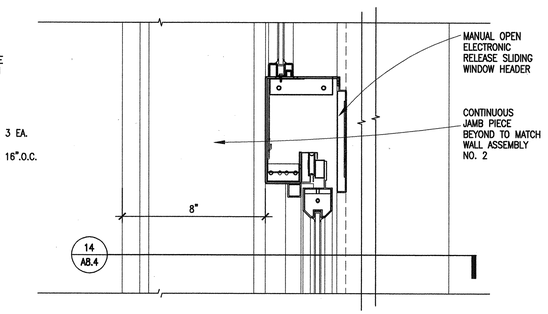

10 PASS-THROUGH HEADER
SCALE: 3"=1'-0"
PTTRHEDR

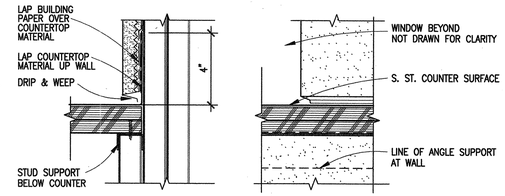

A. COUNTER @ OPENING

B. COUNTER IN FRONT OF WALL

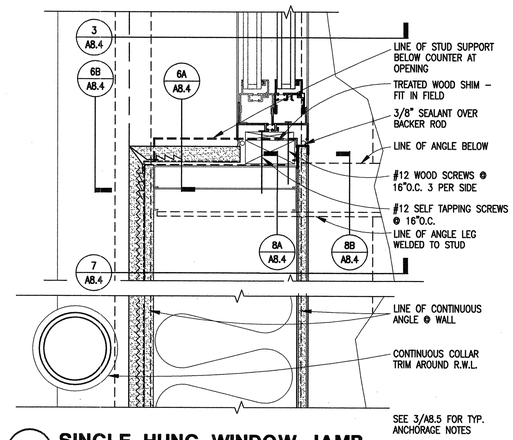

6 SINGLE HUNG WINDOW JAMB
SCALE: 3"=1'-0"
WSHJAMB

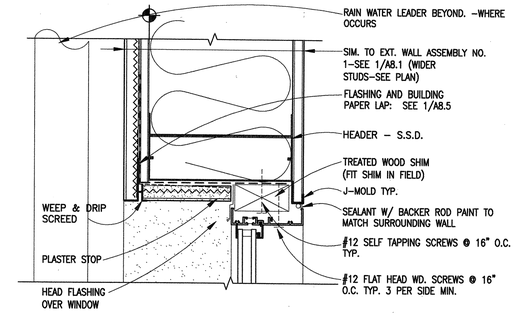

1 SINGLE HUNG WINDOW HEAD
SCALE: 3"=1'-0"
WSHHEDA

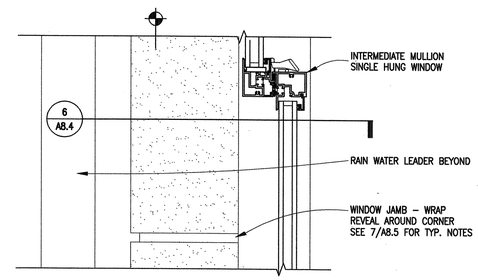

2 SINGLE HUNG WINDOW INT. MULLION
SCALE: 3"=1'-0"
WSHIMUL

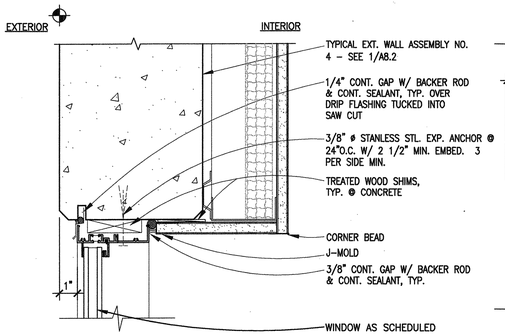

15 SINGLE HUNG WINDOW @ CONC. WALL
SCALE: 3"=1'-0"
HEAD SHOWN, JAMB SIMILAR
SHHEADC

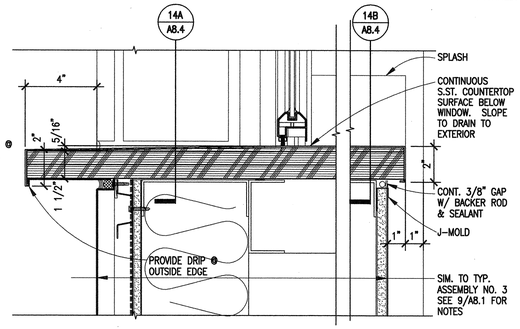

11 PASS THROUGH COUNTER
SCALE: 3"=1'-0"
PTCOUN

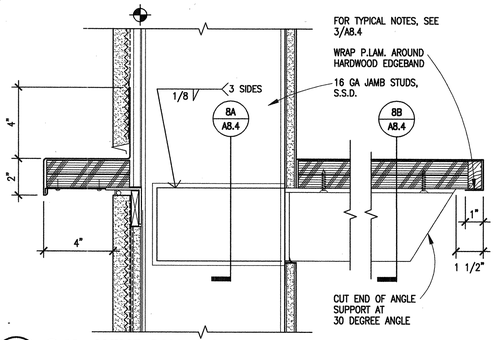

7 S.H. WINDOW COUNTER SUPPORT
SCALE: 3"=1'-0"
WSHCOSU

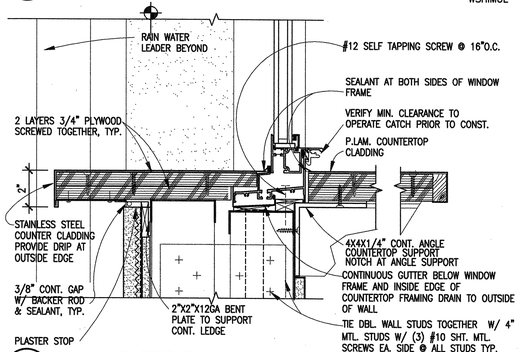

3 SINGLE HUNG WINDOW SILL @ COUNTER
SCALE: 3"=1'-0"
WSHSILC

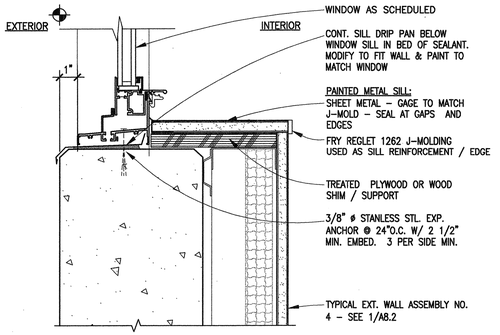

16 SINGLE HUNG WINDOW @ CONC. WALL
SCALE: 3"=1'-0"
SILL CONDITION
SHSILLC

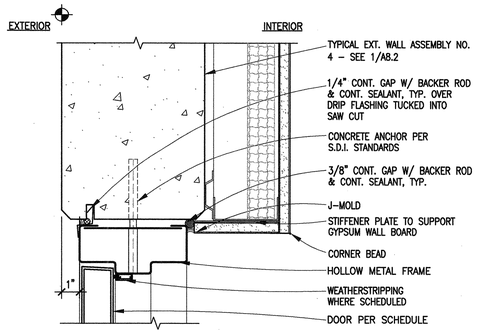

12 H.M. HEAD @ CONCRETE WALL
SCALE: 3"=1'-0"
JAMB SIMILAR
HMHEADC

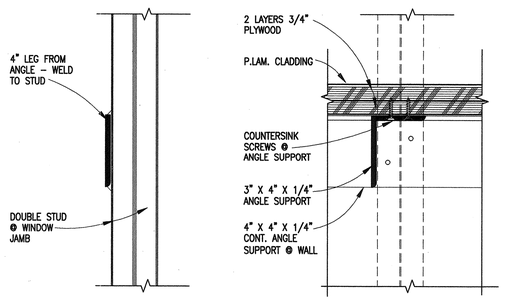

A. WITHIN STUD CAVITY

B. COUNTER IN FRONT OF WALL

8 COUNTER SUPPORT @ WINDOW
SCALE: 3"=1'-0"
COSUWDO

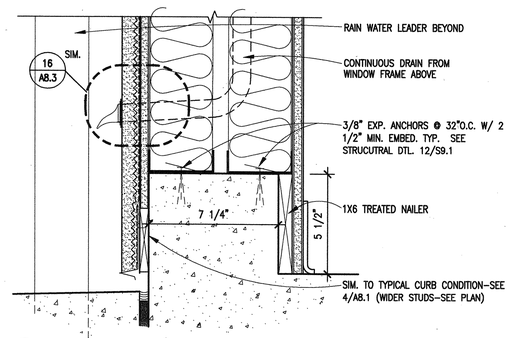

4 DRAINAGE BELOW COUNTER
SCALE: 3"=1'-0"
WDRBCOU

9/11/03 A08-04.DWG

BSA Architects
A California Corporation
350 PACIFIC AVENUE
SAN FRANCISCO, CA 94111
415-781-1526

DIABLO VALLEY COLLEGE

DIABLO VALLEY COLLEGE NEW BOOKSTORE

321 GOLF CLUB RD.
PLEASANT HILL, CALIFORNIA

© 2003 BSA Architects
"All drawings and written material appearing herein constitute the original and unpublished work of the architect and the same may not be duplicated, used, or disclosed without the written consent of the architect."

DATE: 23 JULY, 2004

REVISIONS:

LICENSED ARCHITECT JOHN ASHWORTH No. C26747 REN. 1-31-05 STATE OF CALIFORNIA

BID SET

SHEET TITLE:
DOOR & WINDOW DETAILS

IDENTIFICATION STAMP
DIVISION OF THE STATE ARCHITECT
105925
APPL 01
AC LE FLS EO SS M1
DATE: 5-12-04 JUL 26 2004

BLDG. ID: 098
ID CODE: 312098-109.01-A

DRAWN BY: RK
CHECKED BY: GL
JOB NO: 0307.10

SHEET A8.4

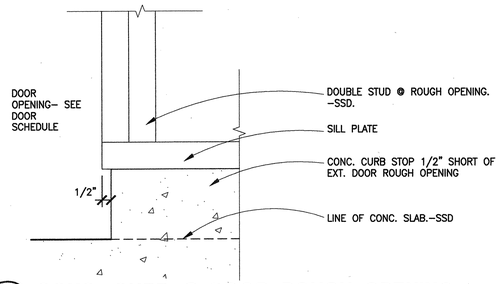

13 CONC. CURB @ DOOR ROUGH OPENING
SCALE: 3"=1'–0"
DRCURBEL

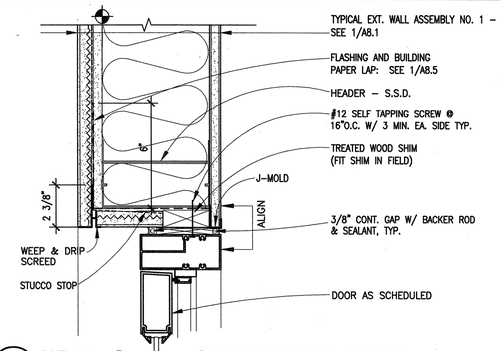

9 HEAD @ STOREFRONT DOOR
SCALE: 3"=1'–0"
STDHEAD

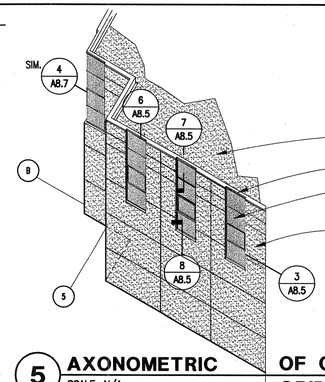

5 AXONOMETRIC OF CORNER @ GRIDLINES B & 5
SCALE: N/A
WSTAXON

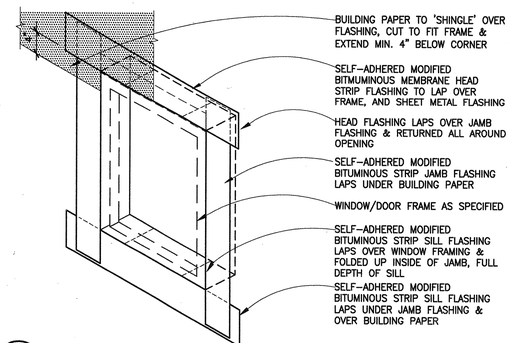

1 TYPICAL STOREFRONT, SINGLE HUNG & H.M. FRAMING FLASHING
SCALE: NONE
WNSFFLSH

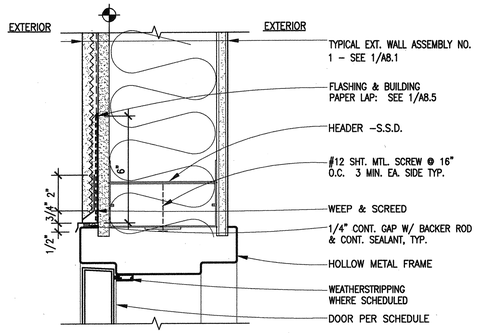

14 H.M. HEAD @ STUCCO WALL
SCALE: 3"=1'–0"
HMHEADX

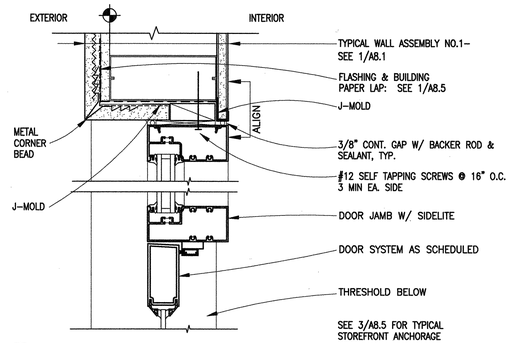

10 DOOR JAMB W/ SIDELITE
SCALE: 3"=1'–0"
WDJMBSL

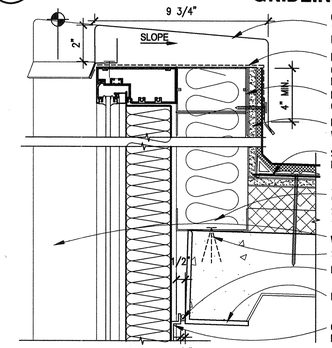

6 STOREFRONT SPANDREL COPING
SCALE: 3"=1'–0"
WSTCOP

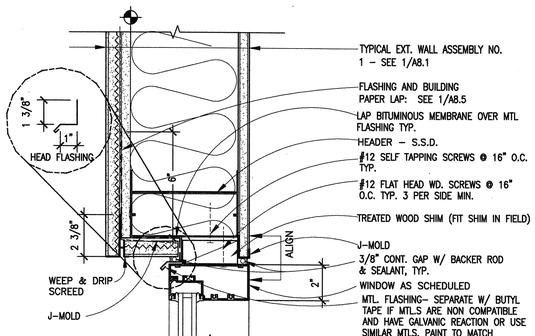

2 WINDOW HEAD @ STUCCO WALL
SCALE: 3"=1'–0"
WSTHEAD

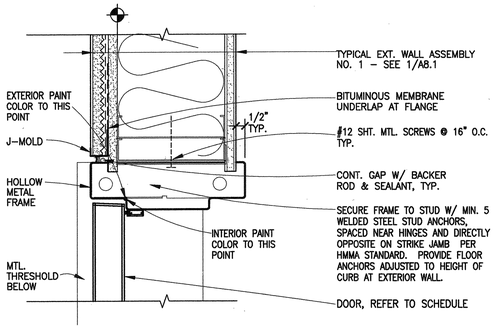

15 H.M. JAMB @ STUCCO WALL
SCALE: 3"=1'–0"
HMJAMBX

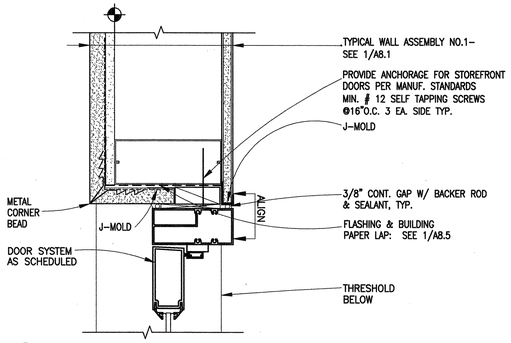

11 EXT. DOOR JAMB @ STUCCO WALL
SCALE: 3"=1'–0"
DEJMBA

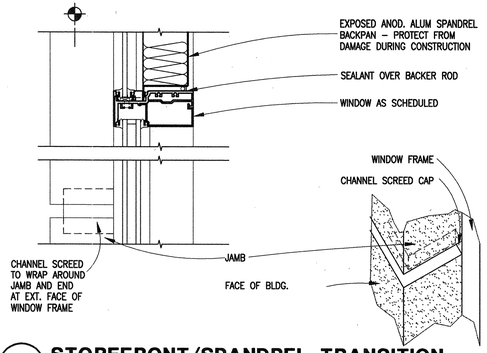

7 STOREFRONT/SPANDREL TRANSITION
SCALE: 3"=1'–0"
WSTHEAD2

NOTE:
FOR ANCHORAGE OF STOREFRONT WINDOWS, USE #10 OR LARGER CORROSION RESISTANT FASTERNERS @ 18" O.C. & @ 6" FROM EVERY HORIZONTAL MEMBER, AS PER MANUF. STANDARD TYP.

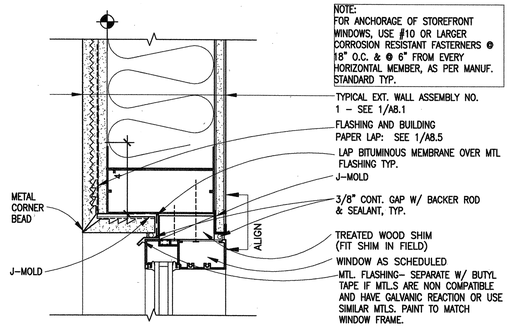

3 STOREFRONT JAMB @ STUCCO
SCALE: 3"=1'–0"
WSTJAMB

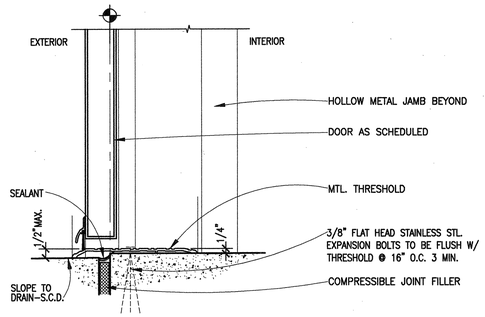

16 METAL DOOR THRESHOLD
SCALE: 3"=1'–0"
THRSEXT1

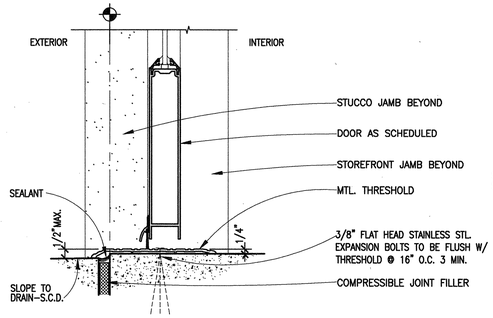

12 EXTERIOR DOOR THRESHOLD
SCALE: 3"=1'–0"
THRSEXT

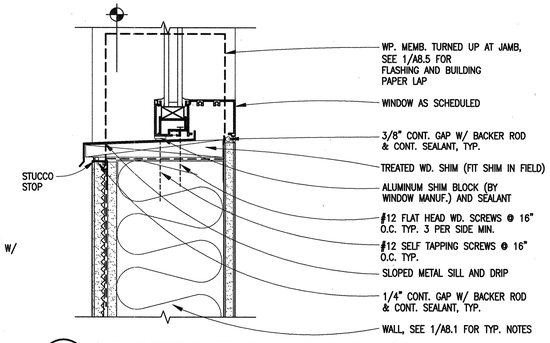

8 STOREFRONT SILL @ STUCCO
SCALE: 3"=1'–0"
WSTSILA

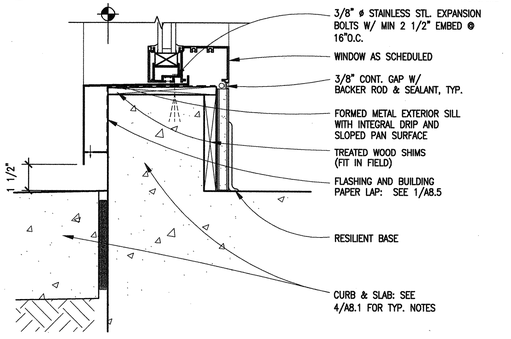

4 WIND. SILL @ GRADE
SCALE: 3"=1'–0"
WSTSILA2

10/02/03 A08-05.DWG

BSA Architects
A California Corporation
350 PACIFIC AVENUE
SAN FRANCISCO, CA 94111
415–781–1526

DIABLO VALLEY COLLEGE

DIABLO VALLEY COLLEGE NEW BOOKSTORE

321 GOLF CLUB RD.
PLEASANT HILL, CALIFORNIA

© 2003 BSA Architects
"All drawings and written material appearing herein constitute the original and unpublished work of the architect and the same may not be duplicated, used, or disclosed without the written consent of the architect."

DATE: 23 JULY, 2004

REVISIONS:

LICENSED ARCHITECT JOHN ASHWORTH No. C26747 REN. 1-31-05 STATE OF CALIFORNIA

BID SET

SHEET TITLE:
DOOR & WINDOW DETAILS

IDENTIFICATION STAMP
DIVISION OF THE STATE ARCHITECT
APPL 01 105925
AC LS FLS EO SS 41
DATE: 5-12-04 JUL 26 2004

BLDG. ID: 098
ID CODE: 312098–109.01–A

DRAWN BY: RK
CHECKED BY: GL
JOB NO: 0307.10

SHEET A8.5

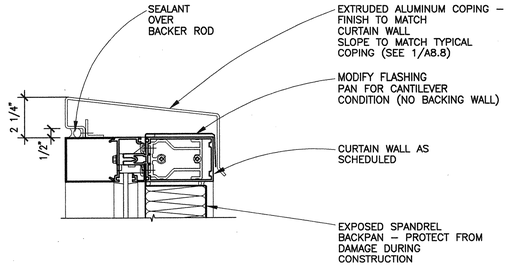

13 CURTAIN WALL COPING
SCALE: 3"=1'-0"
CUWACOP2

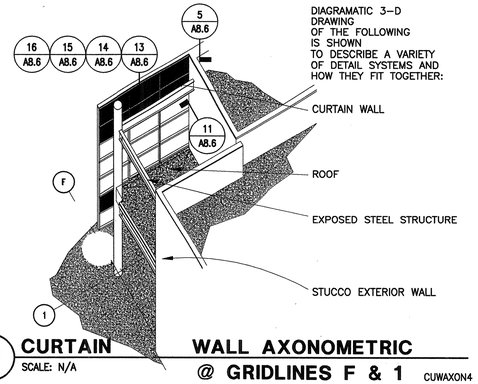

9 CURTAIN WALL AXONOMETRIC @ GRIDLINES F & 1
SCALE: N/A
CUWAXON4

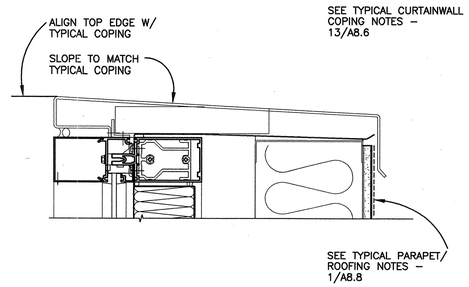

5 CURTAIN WALL COPING
SCALE: 3"=1'-0"
CUWACOP

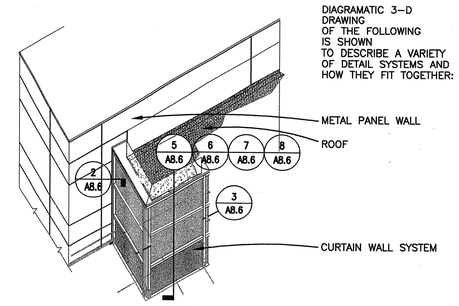

1 CURTAIN WALL AXONOMETRIC @ GRIDLINES C & 1
SCALE: N/A
CUWAXON

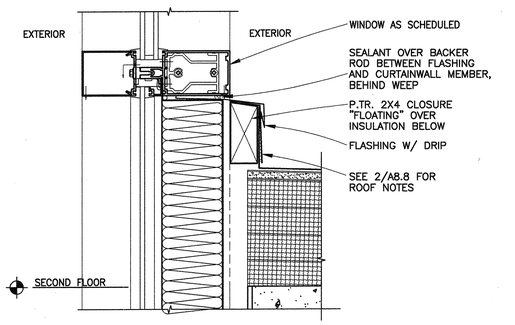

14 CURTAIN WALL/SPANDREL @ ROOF
SCALE: 3"=1'-0"
CUWASPRO

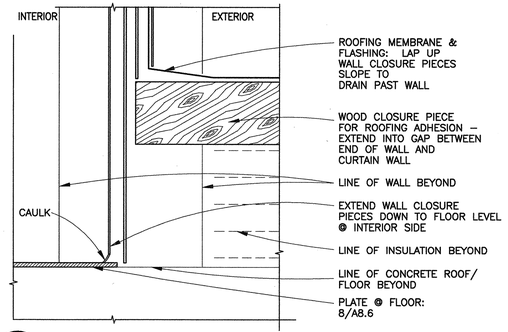

10 CURTAIN WALL MULLION @ WALL/ROOF
SCALE: 3"=1'-0"
CUWAMWR

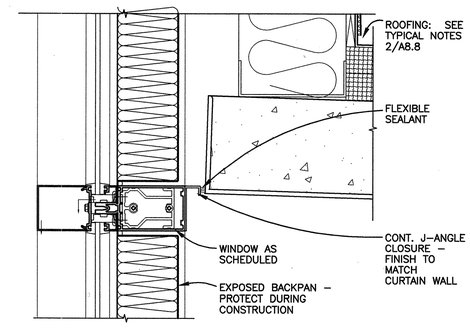

6 CURTAIN WALL @ INTERIOR CEILING
SCALE: 3"=1'-0"
CUWACEL1

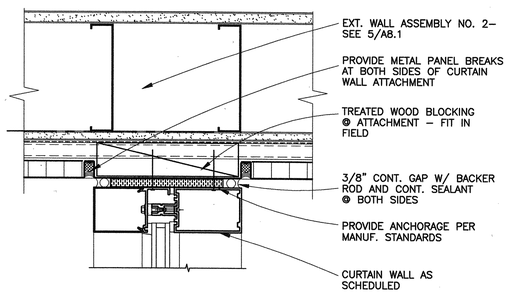

2 CURTAIN WALL @ METAL PANEL
SCALE: 3"=1'-0"
CUWAMEP

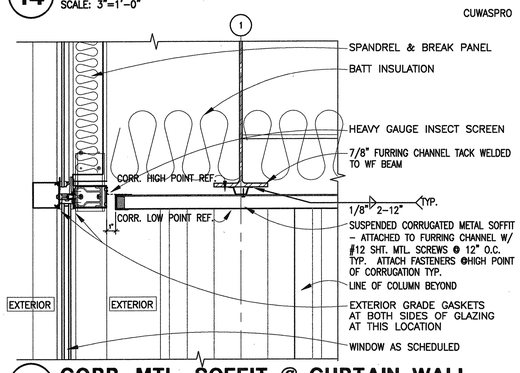

15 CORR. MTL. SOFFIT @ CURTAIN WALL
SCALE: 1 1/2"=1'-0"
ECORSOF1

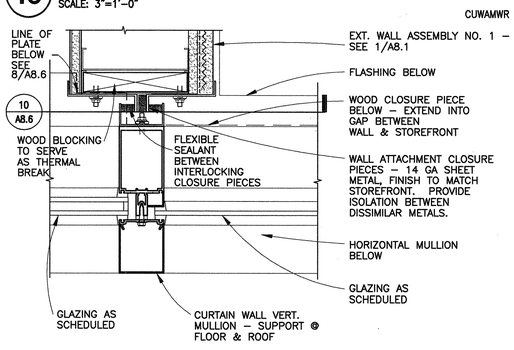

11 CURTAIN WALL MULLION @ WALL
SCALE: 3"=1'-0"
CUWAJMBW

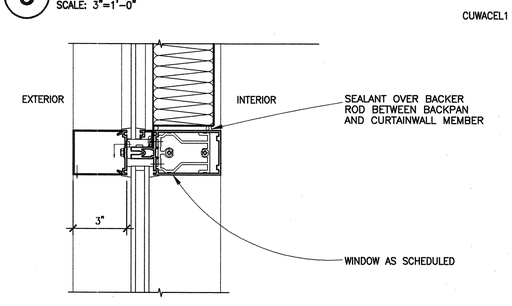

7 CURTAIN WALL SPANDREL TRANSITION
SCALE: 3"=1'-0"
CUWASP

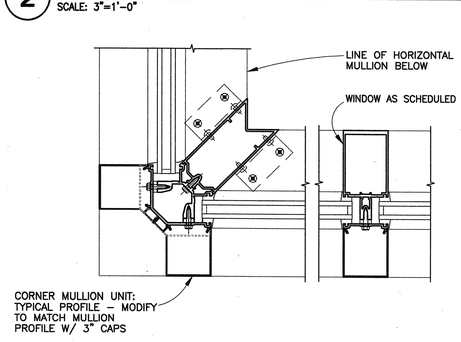

3 CURTAIN WALL @ CORNER
SCALE: 3"=1'-0"
CUWACRN

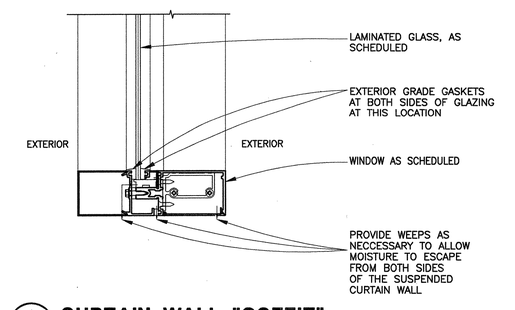

16 CURTAIN WALL "SOFFIT"
SCALE: 3"=1'-0"
CUWASOF

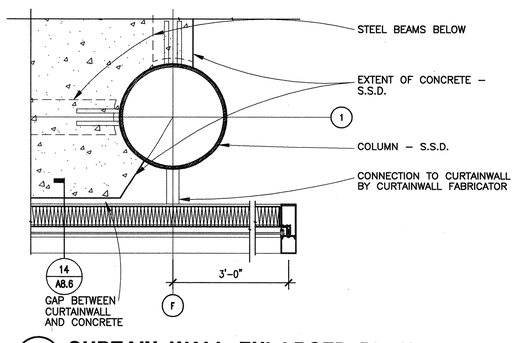

12 CURTAIN WALL ENLARGED PLAN
SCALE: 1"=1'-0"
CUWAEP

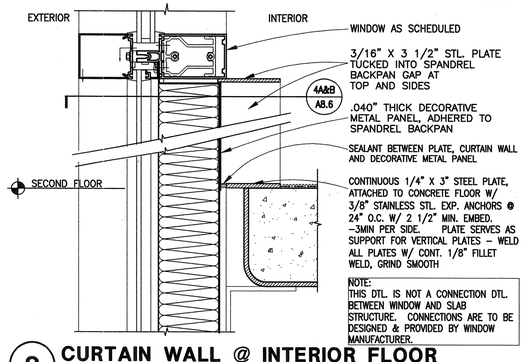

8 CURTAIN WALL @ INTERIOR FLOOR
SCALE: 3"=1'-0"
CUWAFLR

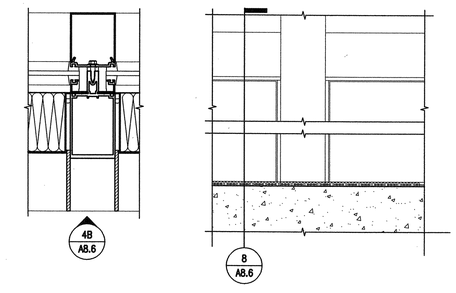

A. PLAN VIEW B. ELEVATION

4 CURTAIN WALL BASE
SCALE: 3"=1'-0"
CUWAFLRB

SEE DETAIL 8/A8.6 FOR TYPICAL NOTES

BSA Architects
A California Corporation
350 PACIFIC AVENUE
SAN FRANCISCO, CA 94111
415–781–1526

DIABLO VALLEY COLLEGE

DIABLO VALLEY COLLEGE NEW BOOKSTORE

321 GOLF CLUB RD.
PLEASANT HILL, CALIFORNIA

© 2003 BSA Architects
"All drawings and written material appearing herein constitute the original and unpublished work of the architect and the same may not be duplicated, used, or disclosed without the written consent of the architect."

DATE: 23 JULY, 2004

REVISIONS:

LICENSED ARCHITECT JOHN ASHWORTH No. C26747 REN. 1-31-05 STATE OF CALIFORNIA

BID SET

SHEET TITLE:
DOOR & WINDOW DETAILS

IDENTIFICATION STAMP
DIVISION OF THE STATE ARCHITECT
APPL 01 105925
AC LE FLS EO SS AI
DATE: 5-12-04 JUL 26 2004

BLDG. ID: 098
ID CODE: 312098–109.01–A

DRAWN BY: RK
CHECKED BY: GL
JOB NO: 0307.10

SHEET A8.6

10/02/03 A08-08.DWG

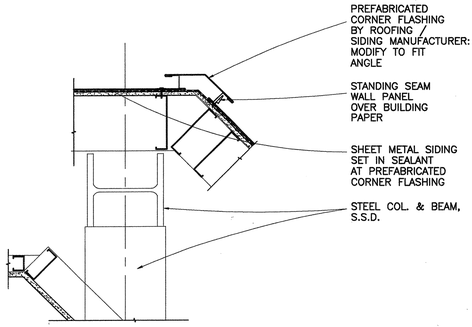

13 SHEET METAL SIDING TRANSITION

SCALE: 1 1/2"=1'-0"

SHMESITR

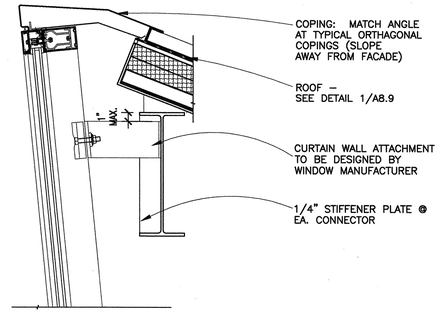

9 ENTRY CURTAIN WALL COPING

SCALE: 1 1/2"=1'-0"

CUWACOP3

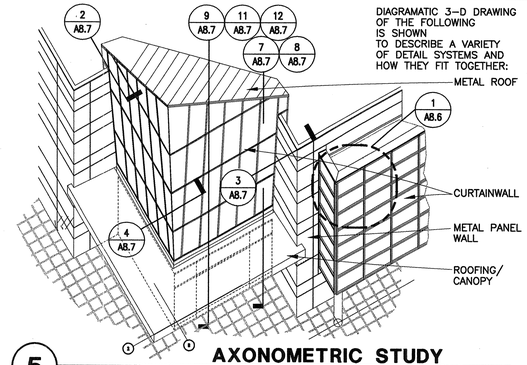

5 AXONOMETRIC STUDY OF CORNER AT GRIDLINES B & 2

SCALE: N/A

CUWAXON5

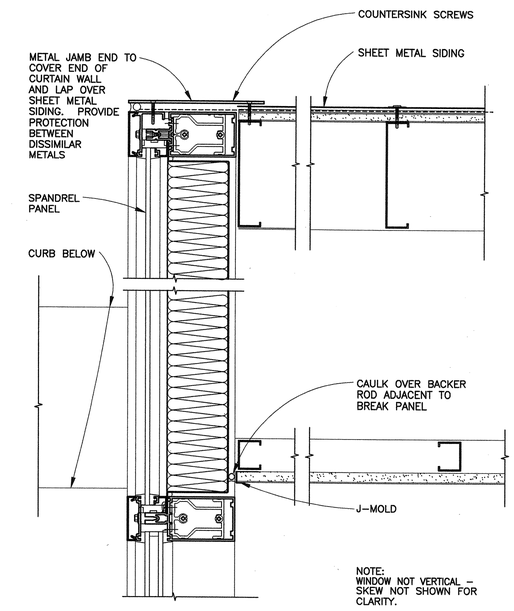

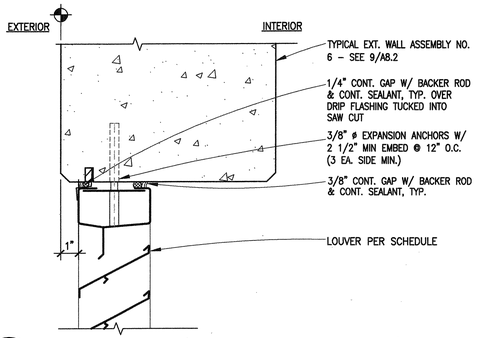

14 LOUVER HEAD @ CONCRETE WALL JAMB SIMILAR

SCALE: 3"=1'-0"

LVRHEADC

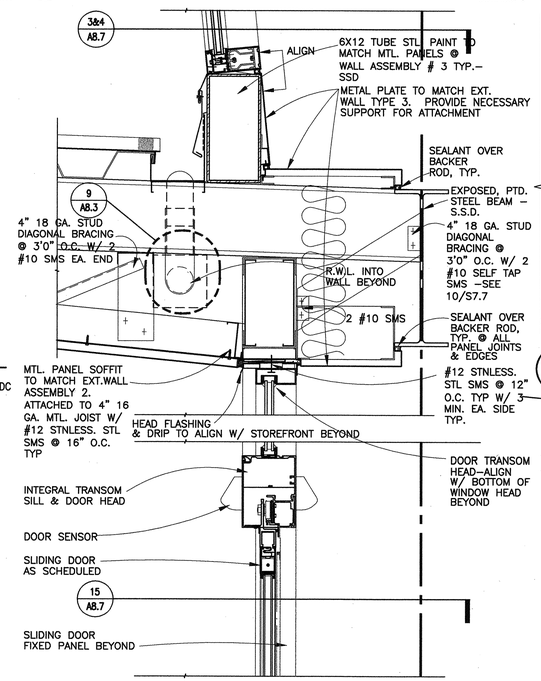

6 ENTRY CANOPY JOIST HANGER

SCALE: 1 1/2"=1'-0"

ECANOPN1

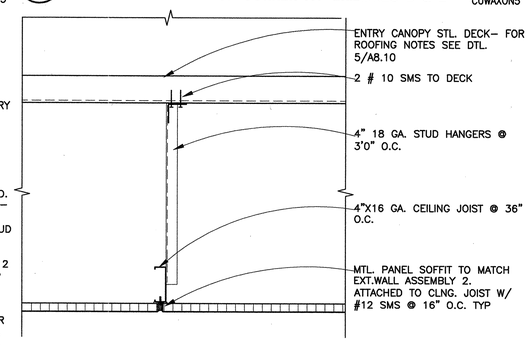

2 ENTRY CURTAIN WALL @ CORNER / ROOF

SCALE: 3"=1'-0"

CUWACRN1

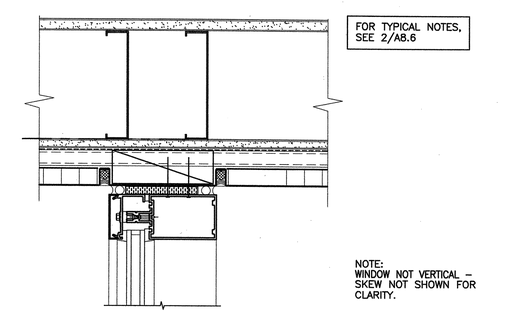

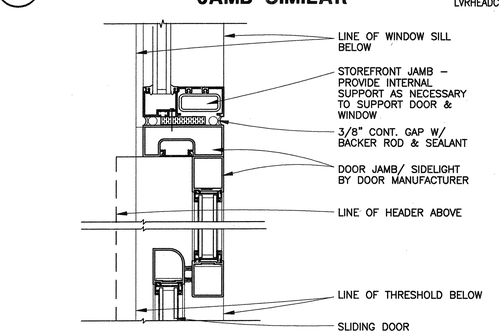

15 ENTRY DOOR JAMB @ STOREFRONT

SCALE: 3"=1'-0"

ENDOJMSF

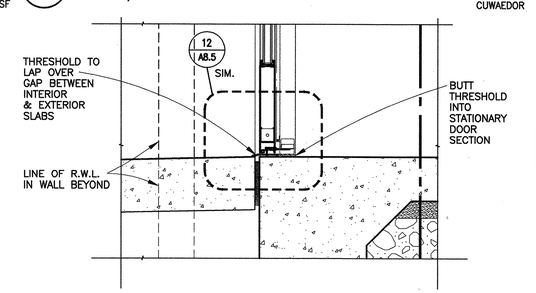

11 CURTAIN WALL @ ENTRY DOORS

SCALE: 1 1/2"=1'-0"

CUWAEDOR

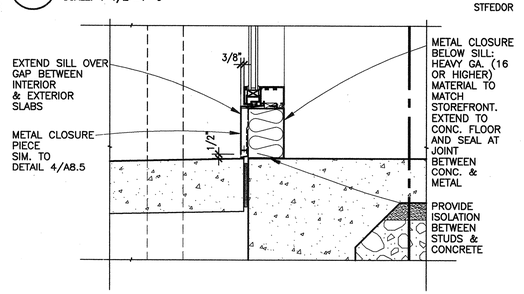

7 STOREFRONT @ ENTRY DOORS

SCALE: 1 1/2"=1'-0"

STFEDOR

3 ENTRY CURTAIN WALL @ METAL PANEL

SCALE: 3"=1'-0"

CUWAMEP2

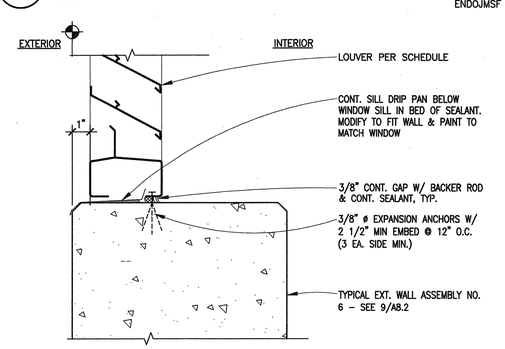

16 LOUVER SILL @ CONCRETE WALL

SCALE: 3"=1'-0"

LVRSILC

12 ENTRY DOOR THRESHOLD

SCALE: 1 1/2" = 1'-0"

ENDOTHR

8 STOREFRONT CURB @ ENTRY DOORS

SCALE: 1 1/2" = 1'-0"

STFCENDO

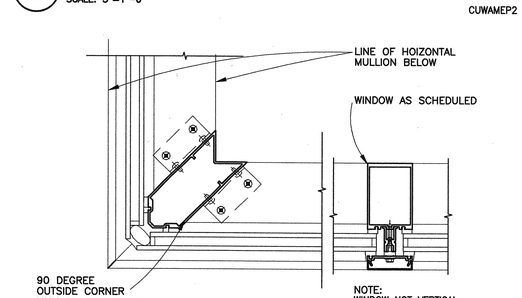

4 ENTRY CURTAIN WALL @ CORNER

SCALE: 3"=1'-0"

CUWACRN2

A08-07.DWG

9/11/03

BSA Architects
A California Corporation
350 PACIFIC AVENUE
SAN FRANCISCO, CA 94111
415-781-1526

DIABLO VALLEY COLLEGE

DIABLO VALLEY COLLEGE NEW BOOKSTORE

321 GOLF CLUB RD.
PLEASANT HILL, CALIFORNIA

© 2003 BSA Architects
"All drawings and written material appearing herein constitute the original and unpublished work of the architect and the same may not be duplicated, used, or disclosed without the written consent of the architect."

DATE: 23 JULY, 2004

REVISIONS:

LICENSED ARCHITECT JOHN ASHWORTH No. C26747 REN. 1-31-05 STATE OF CALIFORNIA

BID SET

SHEET TITLE:

DOOR & WINDOW DETAILS

IDENTIFICATION STAMP
DIVISION OF THE STATE ARCHITECT
105925
APPL 01
AC LE FLS ED SS AI
DATE: 5-12-04 JUL 26 2004

BLDG. ID: 098
ID CODE: 312098-109.01-A

DRAWN BY:
CHECKED BY: GL
JOB NO: 0307.10

SHEET A8.7

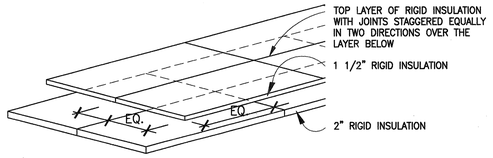

13 INSULATION STAGGER DETAIL
SCALE: 1"=1'-0"
RFRINSUL

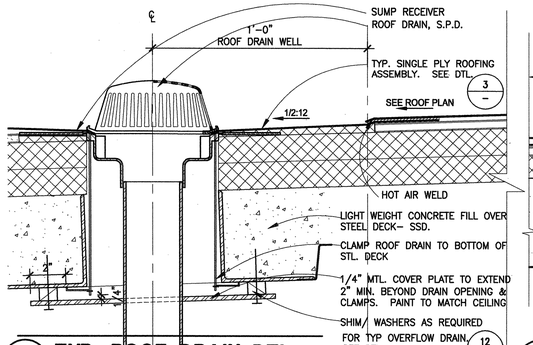

9 TYP. ROOF DRAIN DTL.
SCALE: 3"=1'-0"
PVCDRAIN

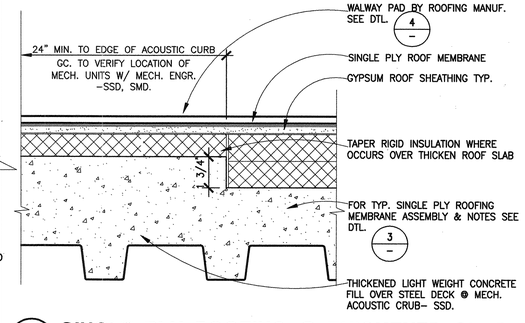

5 SINGLE PLY ROOFING @ THICKENED SLAB
SCALE: 3"=1'-0"
PVCLAP

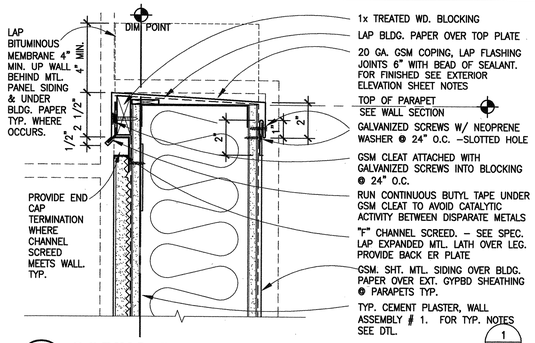

1 COPING DETL. @ ROOF PARAPET
SCALE: 3"=1'-0"
RFWALLS1

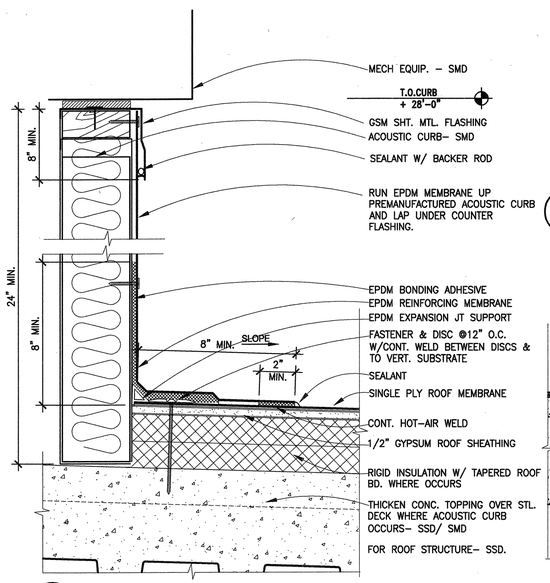

15 TYP MECHANICAL CURB FLASHING
SCALE: 3"=1'-0"
RMECCRB1

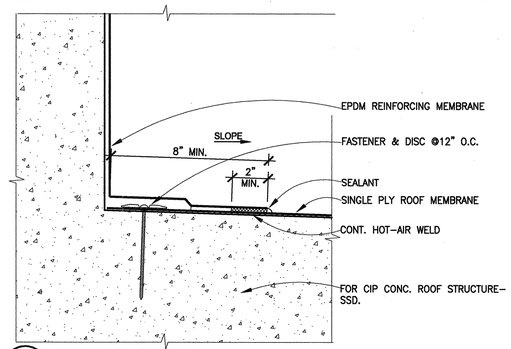

10 SINGLE PLY @ LOADING DOCK PARAPET
SCALE: 3"=1'-0"
RREGLET2

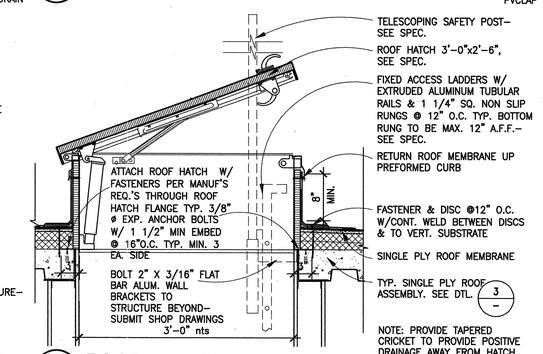

6 ROOF HATCH
SCALE: 1"=1'-0"
RFHATCH

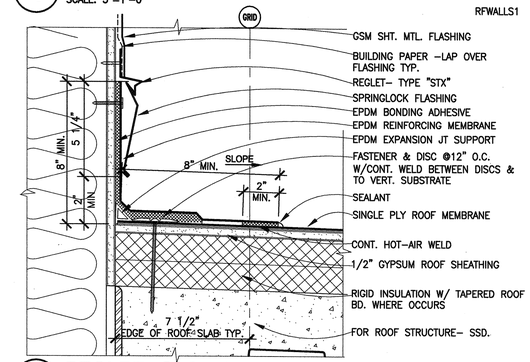

2 REGLET @ SINGLE PLY ROOFING
SCALE: 3"=1'-0"
RREGLET1

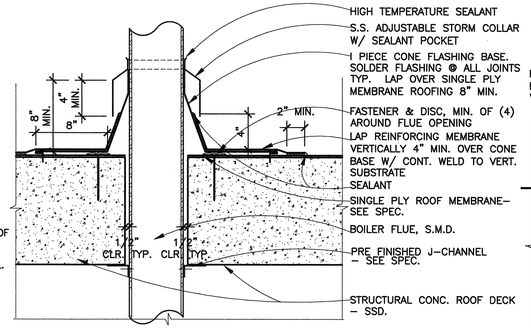

11 BOILER FLUE PENETRATION
SCALE: 1 1/2"=1'-0"
RPVCFLU1

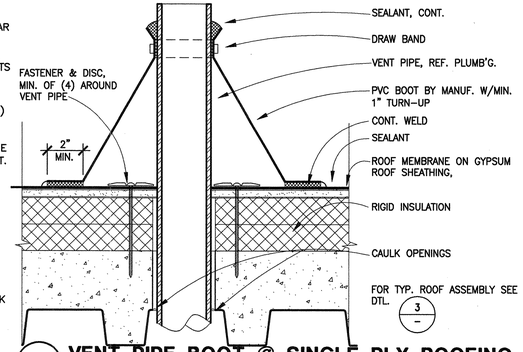

7 VENT PIPE BOOT @ SINGLE PLY ROOFING
SCALE: 3"=1'-0"
RVENSPR1

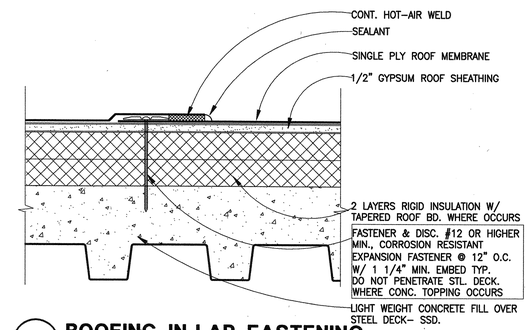

3 ROOFING IN-LAP FASTENING
SCALE: 3"=1'-0"
RPVCLAP1

NOT USED

16

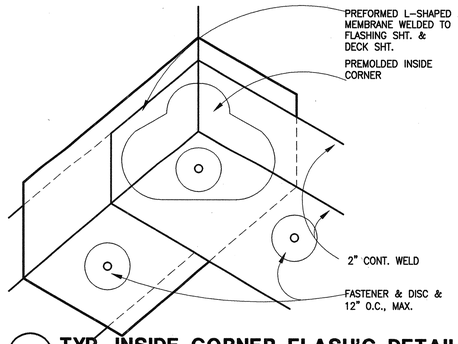

12 TYP. INSIDE CORNER FLASH'G DETAIL
SCALE: 3"=1'-0"
RPVCCOR2

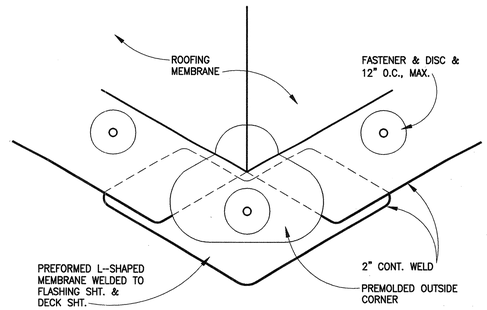

8 PVC ROOF FLASHING @ OUTSIDE CORNER
SCALE: 3"=1'-0"
RPVCCOR1

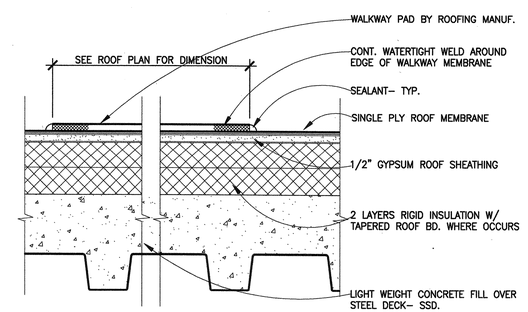

4 WALKWAY PAD @ SINGLE PLY ROOFING
SCALE: 3"=1'-0"
RPVCWLK1

A08-08.DWG
9/11/03

BSA Architects
A California Corporation
350 PACIFIC AVENUE
SAN FRANCISCO, CA 94111
415-781-1526

DIABLO VALLEY COLLEGE

DIABLO VALLEY COLLEGE NEW BOOKSTORE

321 GOLF CLUB RD.
PLEASANT HILL, CALIFORNIA

© 2003 BSA Architects
"All drawings and written material appearing herein constitute the original and unpublished work of the architect and the same may not be duplicated, used, or disclosed without the written consent of the architect."

DATE: 23 JULY, 2004

REVISIONS:

LICENSED ARCHITECT JOHN ASHWORTH No. C26747 REN. 1-31-05 STATE OF CALIFORNIA

BID SET

SHEET TITLE:
EXTERIOR DETAILS – ROOF

IDENTIFICATION STAMP
DIVISION OF THE STATE ARCHITECT
105925
APPL 01
AC LE FLS EO SS A1
DATE: 5-12-04 JUL 26 2004

BLDG. ID: 098
ID CODE: 312098-109.01-A

DRAWN BY:
CHECKED BY: GL
JOB NO: 0307.10

SHEET A8.8

NOT USED

13

NOT USED

14

NOT USED

15

NOT USED

16

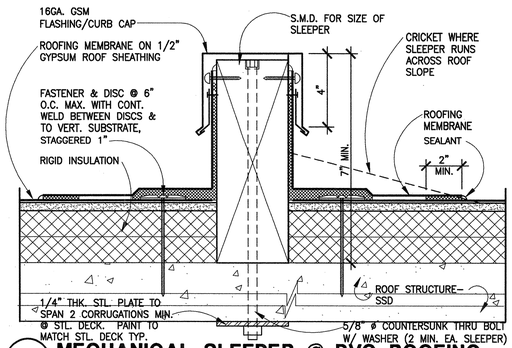

9 MECHANICAL SLEEPER @ PVC ROOFING

SCALE: 3"=1'-0"

RMECHSL1

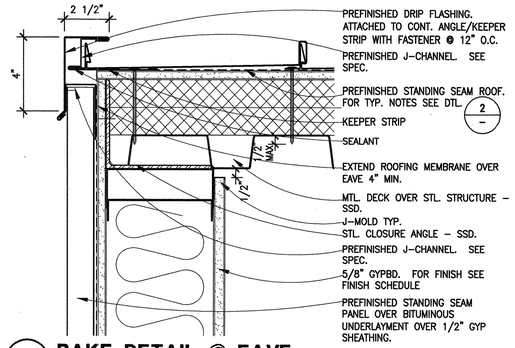

5 RAKE DETAIL @ EAVE

SCALE: 3"=1'-0"

RRAKEVE5

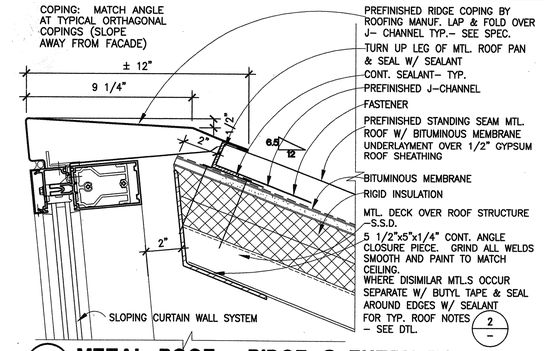

1 METAL ROOF - RIDGE @ ENTRY TOWER

SCALE: 3"=1'-0"

RMTLVRG1

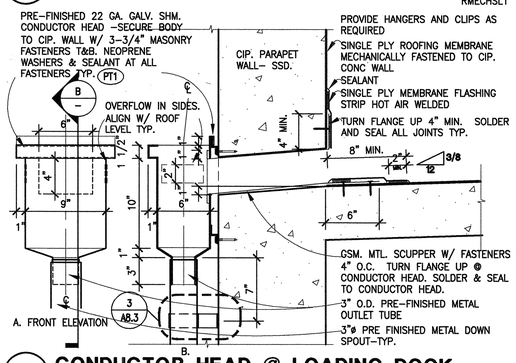

10 CONDUCTOR HEAD @ LOADING DOCK

SCALE: 1 1/2"=1'-0"

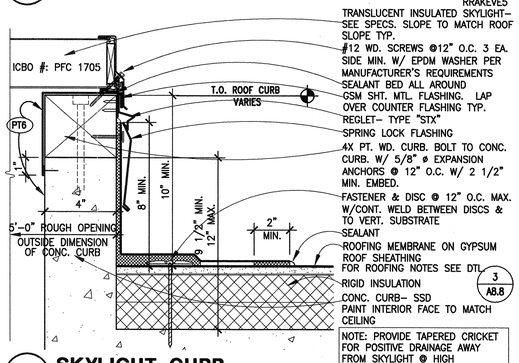

6 SKYLIGHT CURB

SCALE: 3"=1'-0"

RSKYCURB1

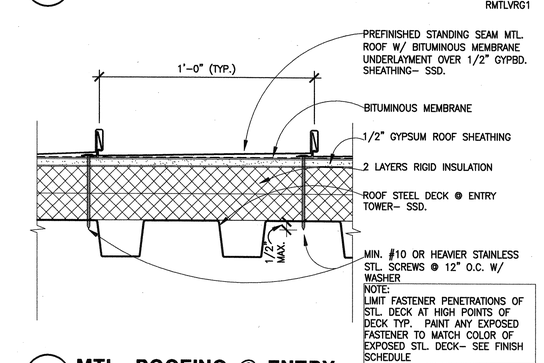

2 MTL. ROOFING @ ENTRY

SCALE: 3"=1'-0"

RMTLLAP1

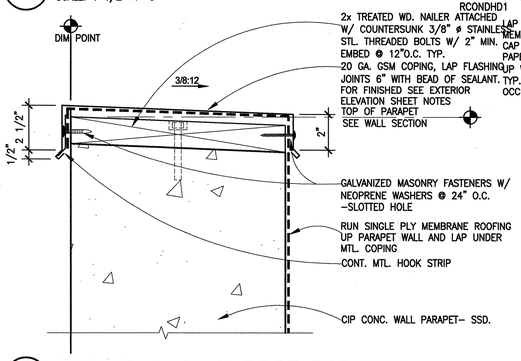

11 COPING DETL. @ ROOF PARAPET

SCALE: 3"=1'-0"

RCONDHD1

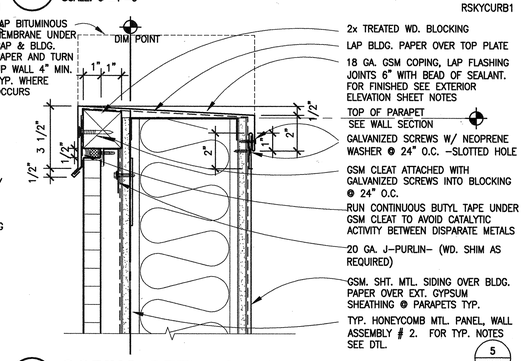

7 COPING DETL. @ ROOF PARAPET

SCALE: 3"=1'-0"

RFWALLS2

3 METAL ROOF - EAVE @ ENTRY TOWER

SCALE: 3"=1'-0"

RMTLEAV1

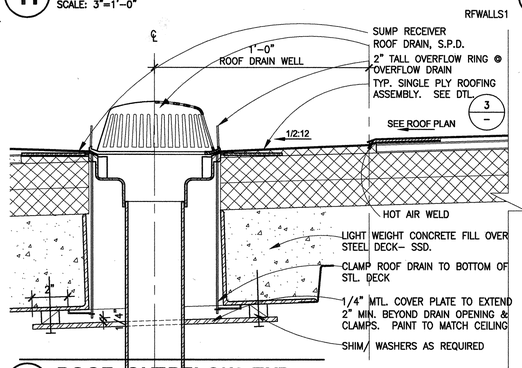

12 ROOF OVERFLOW TYP.

SCALE: 3"=1'-0"

RFWALLS1

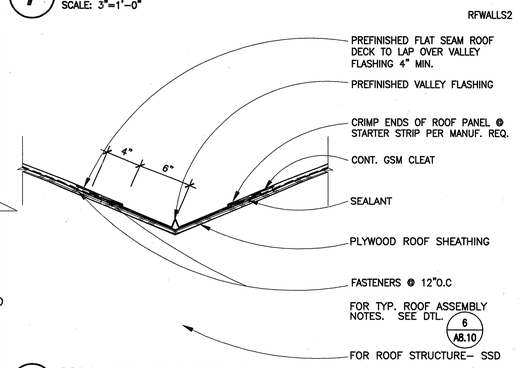

8 VALLEY FLASHING

SCALE: 1 1/2"=1'-0"

RVALLEY1

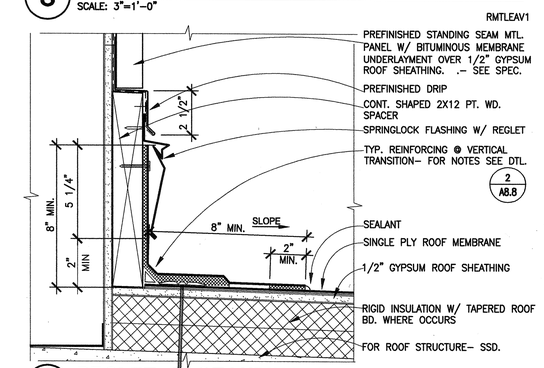

4 REGLET @ STANDING SEAM MTL. PANEL

SCALE: 3"=1'-0"

RREGLET3

BSA Architects
A California Corporation
350 PACIFIC AVENUE
SAN FRANCISCO, CA 94111
415–781–1526

DIABLO VALLEY COLLEGE

DIABLO VALLEY COLLEGE NEW BOOKSTORE

321 GOLF CLUB RD.
PLEASANT HILL, CALIFORNIA

© 2003 BSA Architects
"All drawings and written material appearing herein constitute the original and unpublished work of the architect and the same may not be duplicated, used, or disclosed without the written consent of the architect."

DATE: 23 JULY, 2004

REVISIONS:

LICENSED ARCHITECT JOHN ARNOLD No. C26747 REN. 1-31-05 STATE OF CALIFORNIA

BID SET

SHEET TITLE:

EXTERIOR DETAILS – ROOF

IDENTIFICATION STAMP
DIVISION OF THE STATE ARCHITECT
105925
APPL 01
AC LE FLS ED SS
DATE: 5-12-04 JUL 26 2004

BLDG. ID: 098
ID CODE: 312098–109.01–A

DRAWN BY:
CHECKED BY: GL
JOB NO: 0307.10

SHEET A8.9

9/11/03 A08–09.DWG

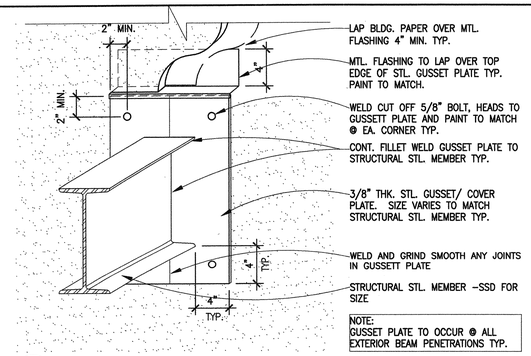

13 ISOMETRIC @ GUSSET PLATE TYP.

SCALE: N.T.S.

EISOGUS

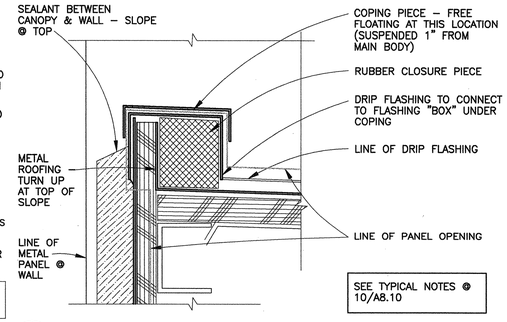

9 CANOPY COPING FLASHING

SCALE: 6"=1'-0"

CACOFLA

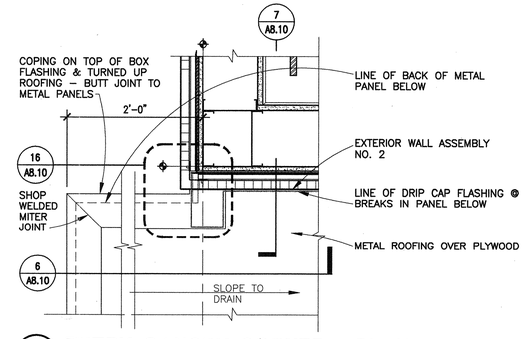

5 ENTRY CANOPY CORNER - PLAN VIEW

SCALE: 1 1/2"=1'-0"

ECACOPV

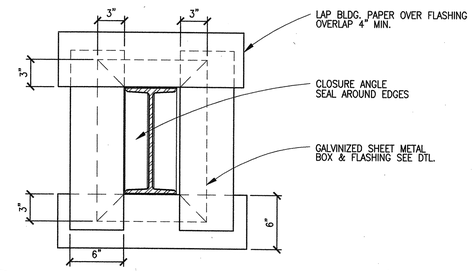

1 FLASHING @ CHANNEL

SCALE: 1 1/2"=1'-0"

EELCHWP

NOT USED

14

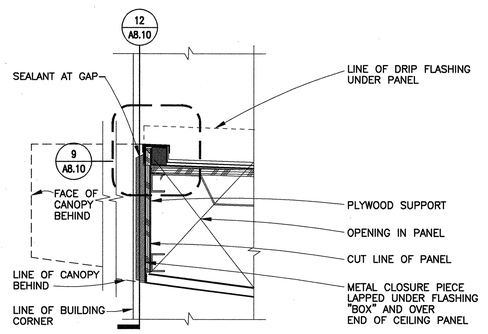

10 CANOPY COPING JOINT

SCALE: 1 1/2"=1'-0"

CACOJO

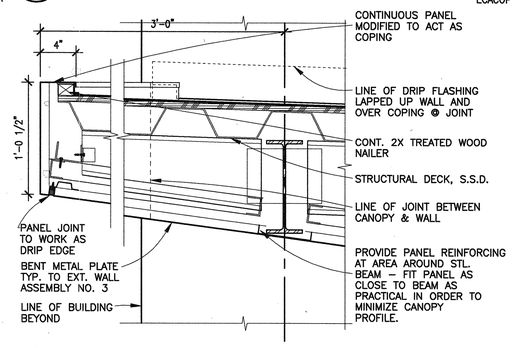

6 ENTRY CANOPY FASCIA

SCALE: 1 1/2"=1'-0"

ENCAFAS

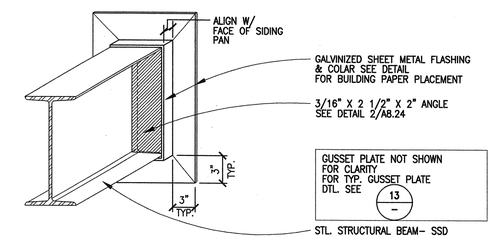

2 ISOMETRIC @ CHANNEL PENETRATION

SCALE: N.T.S.

EISOCHP

NOT USED

15

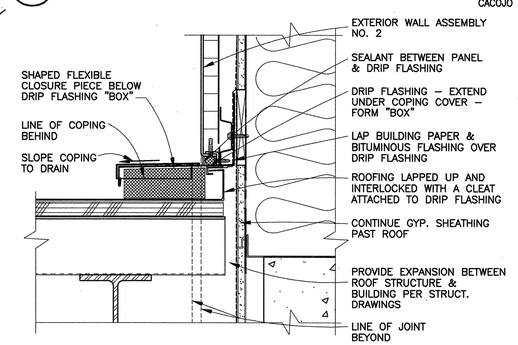

11 CANOPY COPING JOINT - SECTION

SCALE: 3"=1'-0"

CACOJOSE

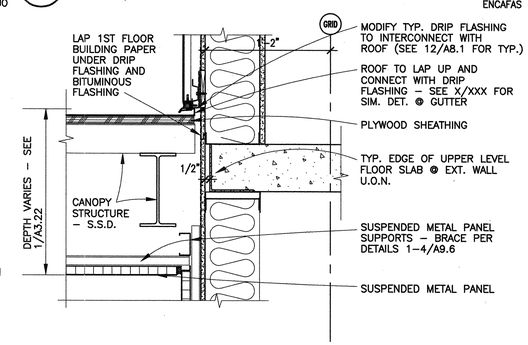

7 ENTRY CANOPY @ WALL

SCALE: 1 1/2"=1'-0"

ECANAWA

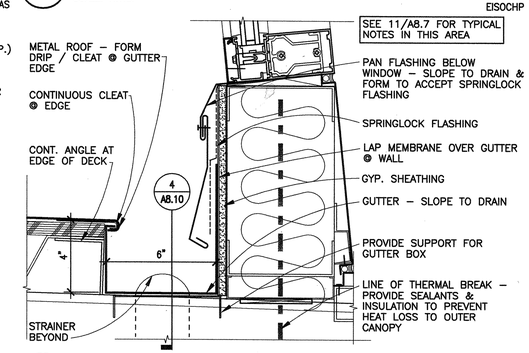

3 TYP. GUTTER @ CURTAIN WALL

SCALE: 3"=1'-0"

CUWAGUT

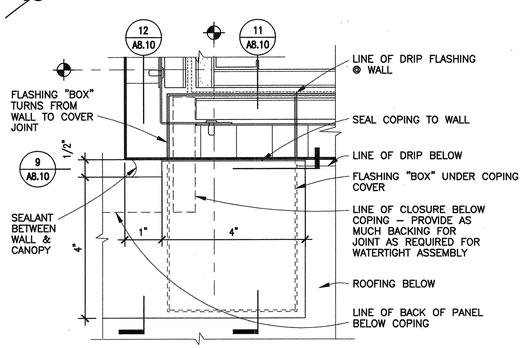

16 CANOPY COPING FLASHING - ENLARGED

SCALE: 6"=1'-0"

CACOFLAS

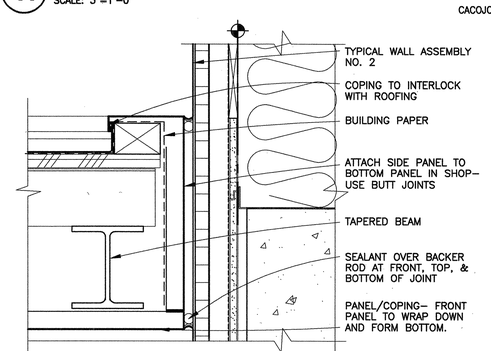

12 CANOPY COPING JOINT @ OVERLAP

SCALE: 3"=1'-0"

CACOJOOV

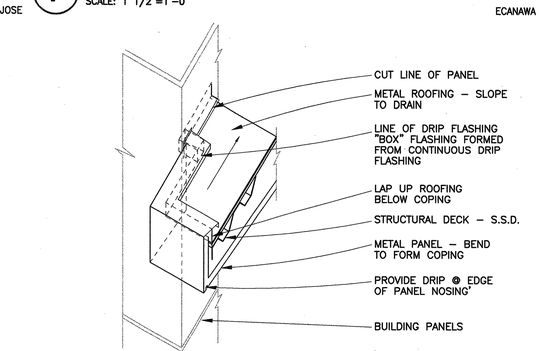

8 ENTRY CANOPY FLASHING - AXON.

SCALE: NO SCALE

ECAFLAX

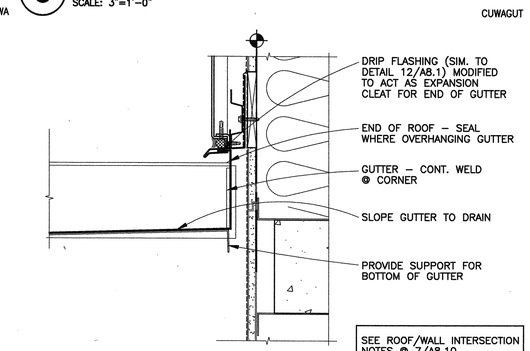

4 GUTTER END @ WALL

SCALE: 3"=1'-0"

GUTENWA

A08-10.DWG

12/3/03

BSA Architects
A California Corporation
350 PACIFIC AVENUE
SAN FRANCISCO, CA 94111
415–781–1526

DIABLO VALLEY COLLEGE

DIABLO VALLEY COLLEGE NEW BOOKSTORE

321 GOLF CLUB RD.
PLEASANT HILL, CALIFORNIA

© 2003 BSA Architects
"All drawings and written material appearing herein constitute the original and unpublished work of the architect and the same may not be duplicated, used, or disclosed without the written consent of the architect."

DATE: 23 JULY, 2004

REVISIONS:

LICENSED ARCHITECT GORA ASHWORTH No. C26747 REN. 1-31-06 STATE OF CALIFORNIA

BID SET

SHEET TITLE:

EXTERIOR DETAILS: CANOPY

IDENTIFICATION STAMP
DIVISION OF THE STATE ARCHITECT
105925
APPL 01
AC LE FLS EO SS AI
DATE: 5-12-04 JUL 26 2004

BLDG. ID: 098
ID CODE: 312098–109.01–A

DRAWN BY: GL
CHECKED BY: GL
JOB NO: 0307.10

SHEET A8.10

13

NOT USED

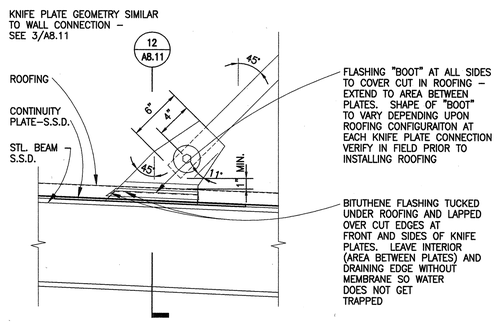

9 CANOPY TIEBACK SECTION
SCALE: 1 1/2"=1'-0" CATISEC

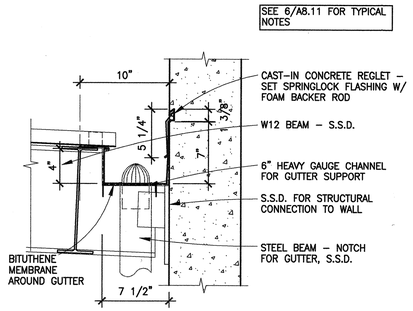

5 CANOPY GUTTER @ CONCRETE WALL
SCALE: 1 1/2"=1'-0" CAGUTCWA

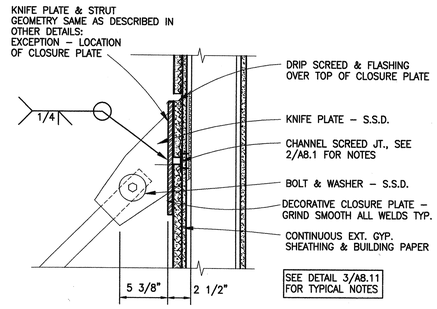

1 CANOPY TIEBACK @ WALL - SIDE
SCALE: 1 1/2"=1'-0" **SHOWN @ WALL TYPE 1** CATIWA12

14

NOT USED

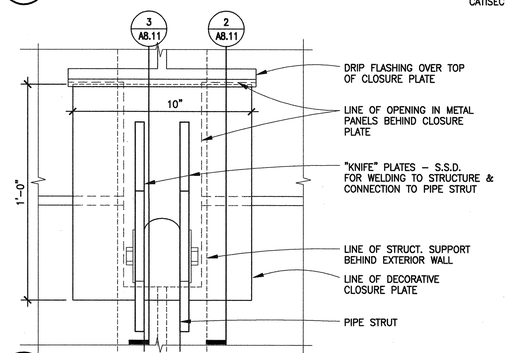

10 CANOPY TIEBACK @ WALL - ELEV.
SCALE: 3"=1'-0" **SHOWN @ WALL TYPE 2** CATIWAEL

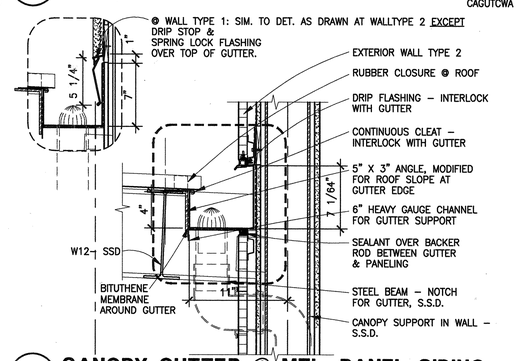

6 CANOPY GUTTER @ MTL. PANEL SIDING
SCALE: 1 1/2"=1'-0" CAGUTWA

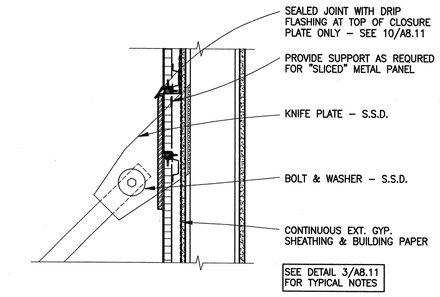

2 CANOPY TIEBACK @ WALL - SIDE
SCALE: 1 1/2"=1'-0" **SHOWN @ WALL TYPE 2** CATIWA22

15

NOT USED

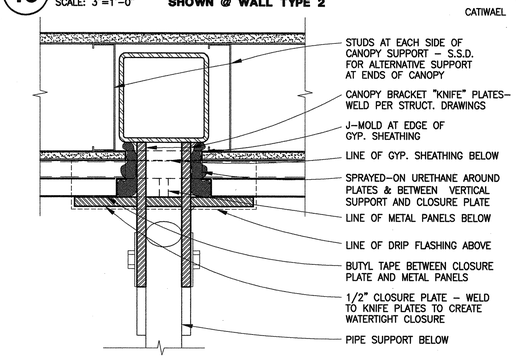

11 CANOPY BRACKET TOE PLAN
SCALE: 3"=1'-0" **SHOWN @ WALL TYPE 2** CABRTOPL

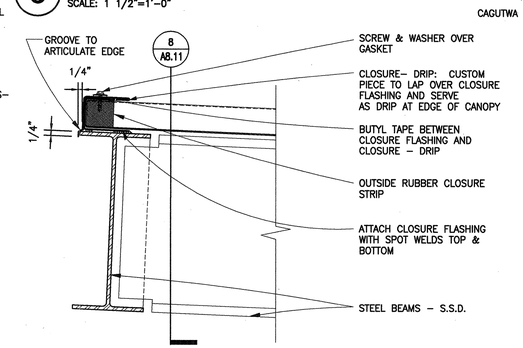

7 CANOPY EDGE
SCALE: 3"=1'-0" CANEDGE

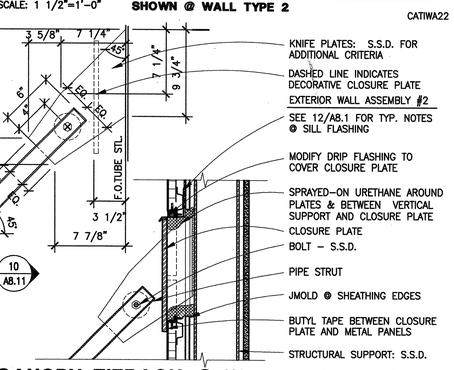

3 CANOPY TIEBACK @ WALL - CENTER
SCALE: 1 1/2"=1'-0" **SHOWN @ WALL TYPE 2** CATIWA21

16

NOT USED

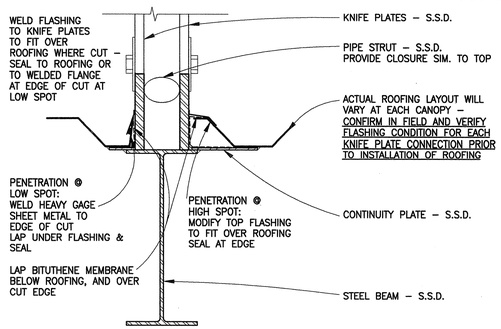

12 CANOPY TIEBACK @ DECKING
SCALE: 3"=1'-0" CANDECK

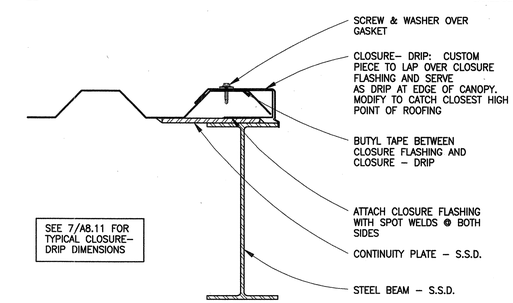

8 CANOPY EDGE- SIDE
SCALE: 3"=1'-0" CANEDGE2

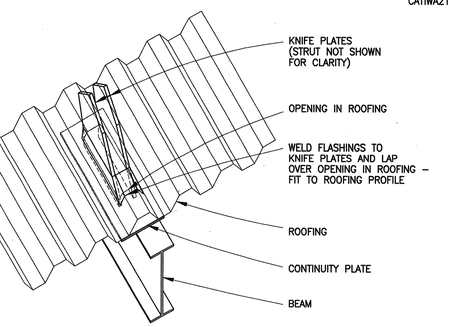

4 CANOPY TIEBACK AXONOMETRIC
SCALE: NO SCALE CATIAXON

12/3/03 A08-11.DWG

BSA Architects
A California Corporation
350 PACIFIC AVENUE
SAN FRANCISCO, CA 94111
415–781–1526

DIABLO VALLEY COLLEGE

DIABLO VALLEY COLLEGE NEW BOOKSTORE

321 GOLF CLUB RD.
PLEASANT HILL, CALIFORNIA

© 2003 BSA Architects
"All drawings and written material appearing herein constitute the original and unpublished work of the architect and the same may not be duplicated, used, or disclosed without the written consent of the architect."

DATE: 23 JULY, 2004

REVISIONS:

LICENSED ARCHITECT JOHN ASHWORTH No. C26747 REN. 1-31-05 STATE OF CALIFORNIA

BID SET

SHEET TITLE:
EXTERIOR DETAILS: ROOF & CANOPY

IDENTIFICATION STAMP
DIVISION OF THE STATE ARCHITECT
105925
APPL 01
AC LE FLS EO SS AI
DATE: 5-12-04 JUL 26 2004

BLDG. ID: 098
ID CODE: 312098-109.01-A

DRAWN BY: RK
CHECKED BY: GL
JOB NO: 0307.10

SHEET A8.11

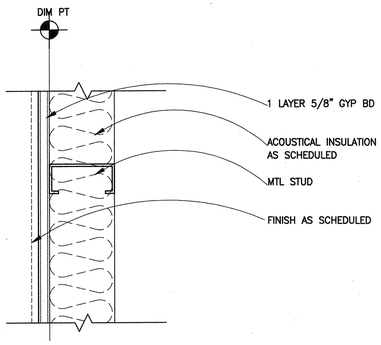

13 FURRED OUT PARTITION
SCALE: 3"=1'-0"
PDBTEXT3

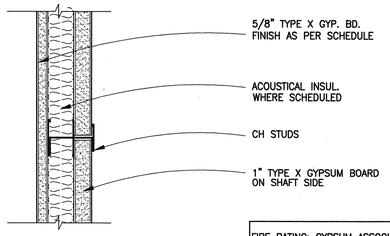

FIRE RATING: GYPSUM ASSOCIATION FILE # WP7008

SOUND RATING: STC 35-39 (1" MINERAL INSUL. IS REQ'D FOR RATING)

9 1 HR. RATED SHAFT WALL
SCALE: 3"=1'-0"
UL DESIGN # U469
PT-1E3

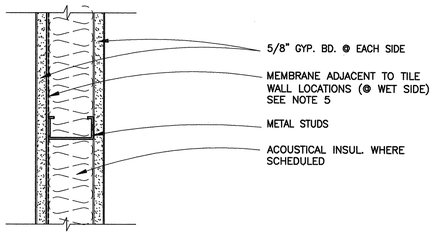

SOUND RATING: STC 40-44 (SIM.) STC 45-49 (W/ 3" MINERAL INSUL.) (SIM.)

5 NON-RATED PARTITION - TYP.
SCALE: 3"=1'-0"
PT-MNR

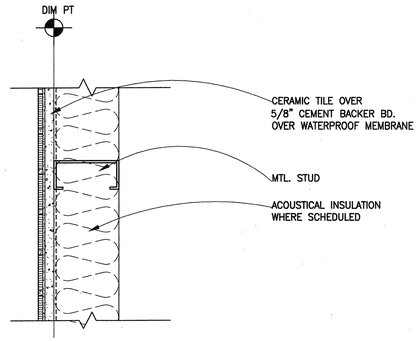

14 FURRED OUT PARTITION -CER. TILE
SCALE: 3"=1'-0"
PTFURCT1

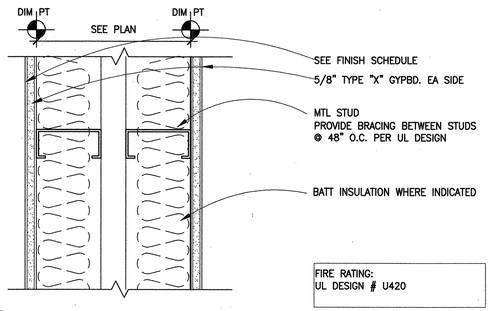

FIRE RATING: UL DESIGN # U420

10 1 HR. RATED-DOUBLE PARTITION
SCALE: 3"=1'-0"
PT-U420

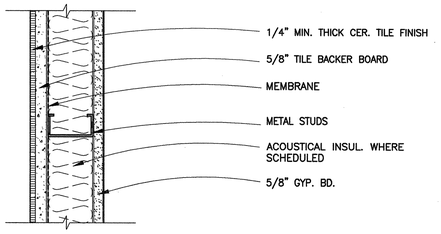

SOUND RATING: N/A

6 N.R. PARTITION - C. T. 1 SIDE
SCALE: 3"=1'-0"
PT-2A7

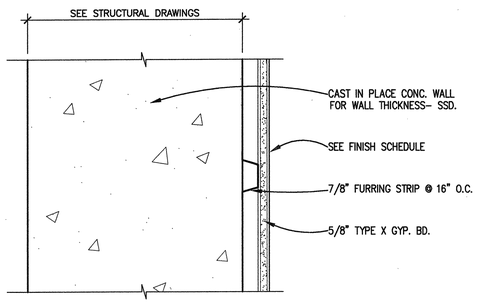

15 CONC. PTN. W/ GYP.BD. ON ONE SIDE
SCALE: 3"=1'-0"
PCONC1

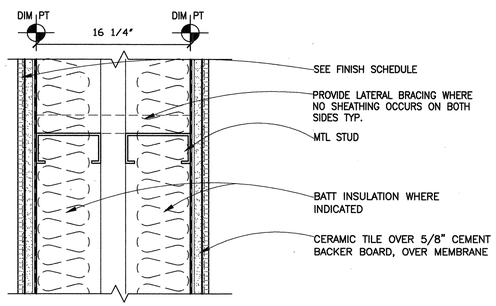

11 DOUBLE PARTITION-CERAMIC TILE
SCALE: 3"=1'-0"
ipplum3

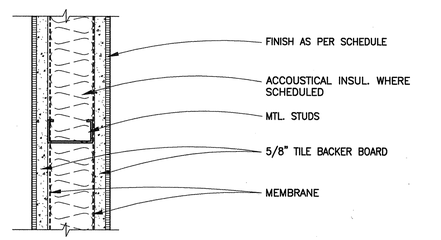

SOUND RATING: STC 40-44 (SIM.) (W/ 3 1/2" MINERAL INSUL.)

7 N.R. PARTITION - C.T. 2 SIDES
SCALE: 3"=1'-0"
PT-7C5

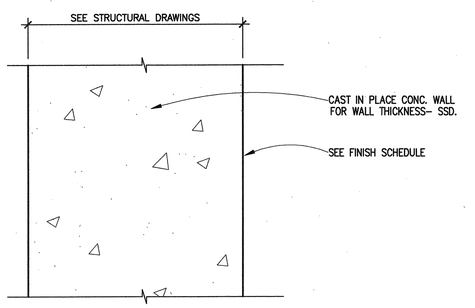

16 C.I.P. CONC. PTN.
SCALE: 3"=1'-0"
PCONC2

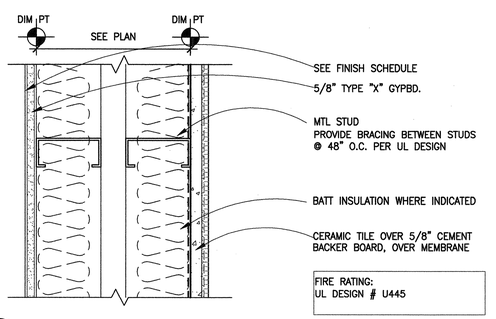

FIRE RATING: UL DESIGN # U445

12 1 HR. RATED-DOUBLE PARTITION-CER. TILE
SCALE: 3"=1'-0"
PT-U445

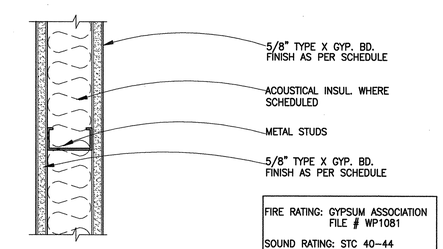

FIRE RATING: GYPSUM ASSOCIATION FILE # WP1081

SOUND RATING: STC 40-44 NGC 2385 STC 45-49 (W/ 3" MINERAL INSUL.) USG 960709

8 1-HR. RATED PARTITION - TYP.
SCALE: 3"=1'-0"
UL DESIGN # U465 & U419
PT-1A1

PARTITION LEGEND

PARTITION TYPE SYMBOL

4 H - A

- PARTITION TYPES (SEE DETAILS)
- WALL/PARTITION STRUCTURE
- ACOUSTICAL INSULATION TYPE
- WALL HEIGHT

WALL/PARTITION STRUCTURE

TYPE	STUD SIZE & SPACING
	TYPES A THROUGH J-NOT USED
J	2-1/2" C-H METAL STUDS @ 16" O.C. MIN., U.O.N. (SEE NOTES 2, 3, 4)
K	4" C-H METAL STUDS @ 16" O.C. MIN., U.O.N. (SEE NOTES 2, 3, 4)
L	6" C-H METAL STUDS @ 16" O.C. MIN., U.O.N. (SEE NOTES 2, 3, 4)
M	1-5/8" METAL STUDS @ 16" O.C. MIN., U.O.N. (SEE NOTES 2, 3, 4)
N	2-1/2" METAL STUDS @ 16" O.C. MIN., U.O.N. (SEE NOTES 2, 3, 4)
O	3-1/2" METAL STUDS @ 16" O.C. MIN., U.O.N. (SEE NOTES 2, 3, 4)
P	3-5/8" METAL STUDS @ 16" O.C. MIN., U.O.N. (SEE NOTES 2, 3, 4)
Q	4" METAL STUDS @ 16" O.C. MIN., U.O.N. (SEE NOTES 2, 3, 4)
R	6" METAL STUDS @ 16" O.C. MIN., U.O.N. (SEE NOTES 2, 3, 4)
S	2 ROWS OF 1-5/8" METAL STUDS @ 16" O.C. MIN., U.O.N. SEE PLANS FOR DISTANCE BETWEEN STUDS (SEE NOTES 2, 3, 4)
T	2 ROWS OF 2-1/2" METAL STUDS @ 16" O.C. MIN., U.O.N. SEE PLANS FOR DISTANCE BETWEEN STUDS (SEE NOTES 2, 3, 4)
U	2 ROWS OF 3-5/8" METAL STUDS @ 16" O.C. MIN., U.O.N. SEE PLANS FOR DISTANCE BETWEEN STUDS (SEE NOTES 2, 3, 4)
	TYPES V THROUGH X-NOT USED
Y	CONCRETE MASONRY UNITS. S.S.D. FOR CMU SIZES
Z	CAST IN PLACE CONCRETE. S.S.D. FOR WALL THICKNESS

ACOUSTICAL INSULATION TYPE

TYPE	DESCRIPTION
-	NO INSULATION
1	ACOUSTICAL BATT INSULATION

NOTE : ALL WALLS SPECIFIED WITH ACOUSTICAL INSULATION SHALL HAVE ACOUSTICALLY SEALED EDGES & PENETRATIONS THROUGHOUT INCLUDED

WALL HEIGHT

TYPE	DESCRIPTION
A	PARTITION EXTENDS TO UNDERSIDE OF STRUCTURE ABOVE
B	PARTITION STUDS EXTEND TO UNDERSIDE OF STRUCTURE ABOVE, WALL FINISH TERMINATES 6" ABOVE ADJACENT CEILING
C	PARTITION EXTENDS TO UNDERSIDE OF CEILING
D	PARTITION HEIGHT NOTED. SEE PLAN, SECTION, OR DETAIL
E	PARTITION HEIGHT TO MATCH EXISTING
	REFER TO TYPICAL HEAD DETAILS 1,2,3/A9.2

NOTES:

1. SEE STRUCTURAL DRAWINGS FOR SPECIFIC STUD SIZES, SPACING, & LOCATIONS @ EXTERIOR STUDS. REFER TO TYP. ARCHITECURAL & FRAMING DETAILS ON SHEET A9.2. FOR INTERIOR PARTITION SIZES, MAX. HT., GAUGE, SPACING- REFER TO SPECIFICATIONS 05400
2. PROVIDE 20 GA. MIN FOR ALL PARTITIONS TYP., U.O.N.
3. PROVIDE 20 GA. MIN. STUDS, 16" O.C. @ CERAMIC TILE FINISHED WALLS, U.O.N.
4. SEE SCHEDULE IN SPECIFICATIONS SECTION, 09250, FOR ADDITIONAL DESCRIPTION OF RATED GYP. BD. & GYP. BD. TYPES
5. USE CEMENT BACKER BD. ON CERAMIC TILE WALLS TO HEIGHT OF CERAMIC TILE & USE GYP. BD. FOR REMAINING HEIGHT OF WALL. MATCH THE THICKNESS OF THE BOARD TYPES. REFER TO DETAILS 12/A9.5 AND 11&12/A9.7. ALL CERAMIC TILE TO BE INSTALLED PER TILE COUNCIL OF AMERICA METHOD W244.
6. FINAL WIDTH OF WALL ASSEMBLY SHALL MATCH EXISTING ASSEMBLY SUCH THAT FINISHED SURFACES ALIGN ON EACH SIDE.
7. ALL FIRE RATING & SOUND RATINGS ARE BASED ON NO ACOUSTICAL INSULATION INSIDE PARTITION U.O.N.
8. SPECIFIC DETAILS MAY REQUIRE DIFFERENT STUD REQUIREMENTS
9. PROVIDE 16 GA. MIN FOR ALL PARTITIONS W/ BUILT IN CASEWORK TYP., U.O.N.

BSA Architects
A California Corporation
350 PACIFIC AVENUE
SAN FRANCISCO, CA 94111
415-781-1526

DIABLO VALLEY COLLEGE

DIABLO VALLEY COLLEGE NEW BOOKSTORE

321 GOLF CLUB RD.
PLEASANT HILL, CALIFORNIA

© 2003 BSA Architects
"All drawings and written material appearing herein constitute the original and unpublished work of the architect and the same may not be duplicated, used, or disclosed without the written consent of the architect."

DATE: 23 JULY, 2004

REVISIONS:

LICENSED ARCHITECT JOHN ASHWORTH No. C26747 REN. 1-31-05 STATE OF CALIFORNIA

BID SET

SHEET TITLE:

PARTITION TYPES & DETAILS

IDENTIFICATION STAMP
DIVISION OF THE STATE ARCHITECT
105925
APPL 01
AC LE FLS ED SS AL
DATE: 5-12-04 JUL 2 6 2004

BLDG. ID: 098
ID CODE: 312098-109.01-A

DRAWN BY:
CHECKED BY: GL
JOB NO: 0307.10

SHEET A9.1

8-19-2003 A9-01

13

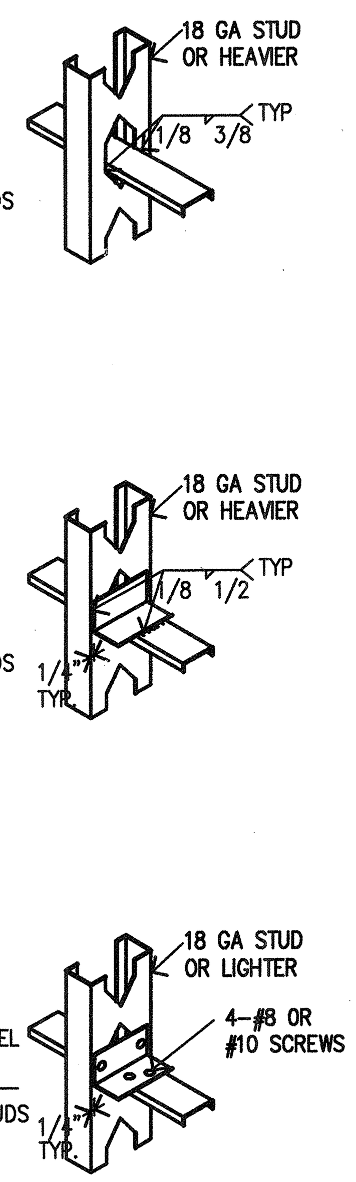

BRIDGING CHANNELS

RUN CONTINUOUSLY THROUGH STUD PUNCH OUTS. FASTEN TO EACH STUD AS INDICATED. FOR WELDING IN PUNCH OUT USE:
7/8"x16 GA @ 2 1/2" STUD
1 1/2"x16 GA @ 3 5/8" STUD
2 1/2"x16 GA @ 6" STUD

BRIDGING CLIPS

2 1/4"x14 GA @ 2 1/2" STUD
3 3/8"x14 GA @ 3 5/8" STUD
5 3/4"x14 GA @ 6" STUD

PROVIDE BRIDGING FOR PARTITIONS WITH SHEATHING BOTH SIDES AS FOLLOWS:

SPAN UP TO 14'-0" - ONE ROW AT MID-SPAN
SPAN 14'-0" TO 20'-0" - TWO ROWS SPACED AT 1/3 POINTS OF SPAN
SPAN 20'-0" TO 26'-0" - THREE ROWS SPACED AT 1/4 POINTS OF SPAN
SPAN 26'-0" TO 32'-0" - FOUR ROWS SPACED AT 1/5 POINTS OF SPAN

PROVIDE BRIDGING FOR PARTITIONS WITH SHEATHING ONE SIDE & DOUBLE STUD PARTITIONS AS FOLLOWS:

PROVIDE ROWS AT 5'-0" O.C. MAXIMUM.

14 TYP. BRIDGING ATACHMENT
SCALE: 1 1/2"=1'-0"
PTYPBRDG

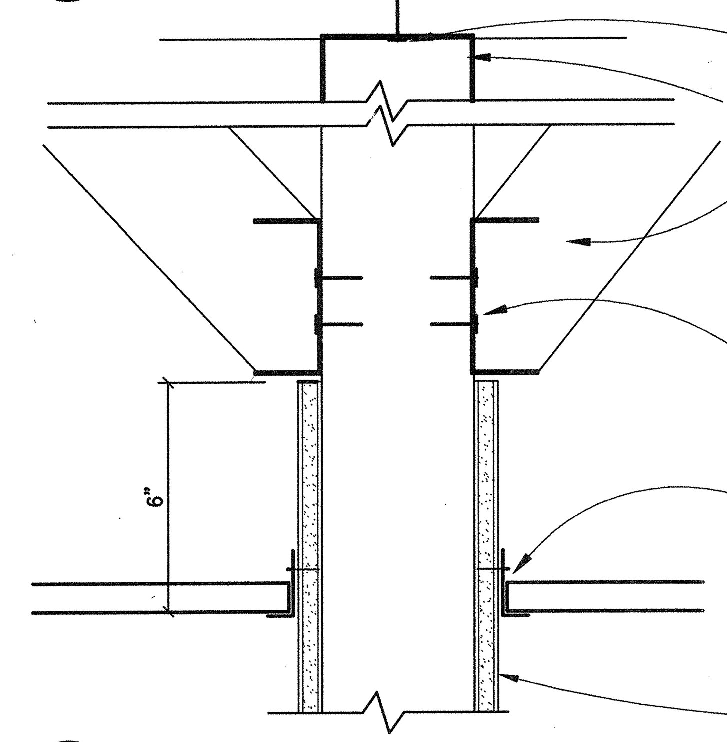

15 PARTITION HEAD @ SUSPENDED CEILING
SCALE: 3"=1'-0"
PARTHEAD1

STUD SIZE	MANUF. NUMBER	STUD SPACING	MAX. HEIGHT
2 1/2 X 20 GA	250S137-33	16" O.C.	10'-5"
2 1/2 X 16 GA	250S137-54	16" O.C.	12'-1"
3 5/8 X 20 GA	362S137-33	16" O.C.	14'-7"
3 5/8 X 16 GA	362S137-54	16" O.C.	17'-0"
4 X 20 GA	-S137-33	16" O.C.	-
4 X 16 GA	-S137-54	16" O.C.	-
6 X 20 GA	600S137-33	16" O.C.	21'-9"
6 X 16 GA	600S137-54	16" O.C.	25'-5"
8 X 20 GA	800S137-33	16" O.C.	27'-6"
8 X 16 GA	800S137-54	16" O.C.	32'-2"

1. STUD SPANS BASED ON 5 PSF LATERAL LOAD, W/ MAX DEFLECTION = L/360
2. MIN. 16 GA. TRACK TOP & BOTTOM U.O.N.

16 INTERIOR PARTITION STUD SCHEDULE
SCALE: 3"=1'-0" ICBO No: ER-4943P
PTSCHED1

8-19-2003 A9-02

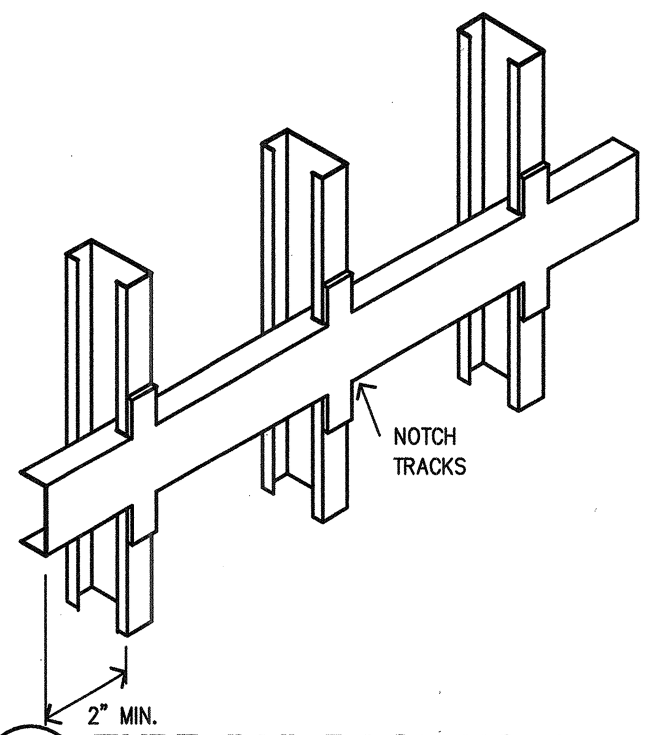

TYPE 'A' BACKING PLATE

1. FOR MISC. ITEMS SUCH AS SURFACE MTD MIRRORS & TOWEL DISPENSERS, WASTE RECEPTACLES ETC. WEIGHING LESS THAN 50 LBS./FT
2. SEE PARTITION TYPES FOR STUD SIZE & GA.
3. VERIFY LENGTH, HEIGHT, LOCATION, & QUANTITY OF BACKING PLATES REQUIRED. W/ APPROPRIATE MANUF & TRADES.
4. USE 18 GA RUNNER FASTENED TO STUD W/ 2-3/8" PAN HEAD SCREWS
5. SPAN BACKING PLATE OVER 3 STUDS MIN
6. ATTACH ITEMS TO BACKING PLATE W/ #12 SELF TAPPING SHT MTL SCREWS, U.O.N.

9 TYPE "A" BACKING PLATE (LIGHT WT.)
SCALE: 1 1/2"=1'-0"
PBACKPLTA

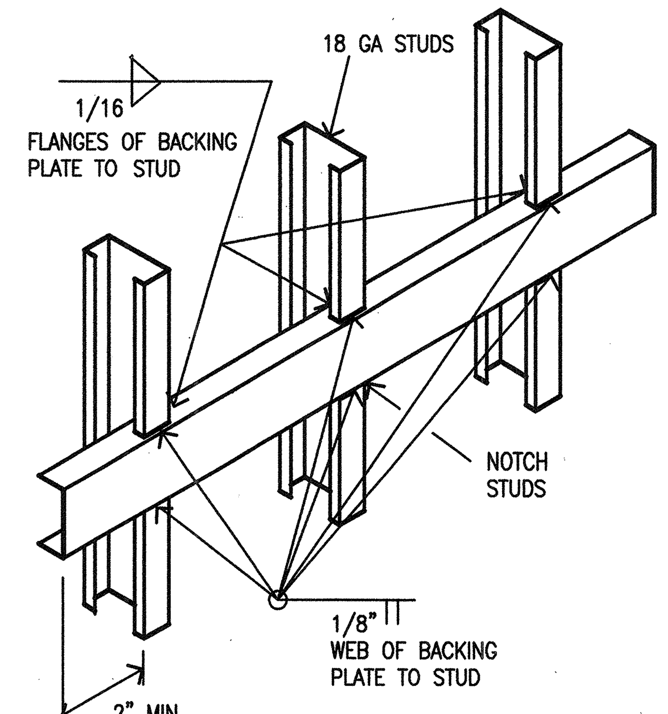

TYPE 'B' BACKING PLATE

1. FOR UPPER WALL HUNG CABINETS W/ MAX. 2 SHELVES, BASE CABINETS, GRAB BARS, FULL HEIGHT CABINETS HAND RAILS, ETC. WEIGHING LESS THAN 100LBS/FOOT
2. SEE PARTITION TYPES FOR STUD SIZE & GA.
3. VERIFY LENGTH, HEIGHT, LOCATION, & QUANTITY OF BACKING PLATES REQUIRED.
4. 6"x1 1/4" 16 GA TRACK LET-IN TO STUD FLUSH & WELDED TO STUDS
5. SPAN BACKING PLATE OVER 3 STUDS MINIMUM.
6. ATTACH ITEMS TO BACKING PLATE W/ #12 SELF TAPPING SHEET METAL SCREWS, U.O.N.
7. PROVIDE 18 GA METAL STUDS @ PL

10 TYPE "B" BACKING PLATE (MEDIUM WT.)
SCALE: 1 1/2"=1'-0"
PBACKPLTB

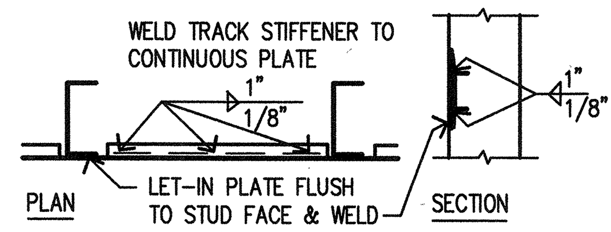

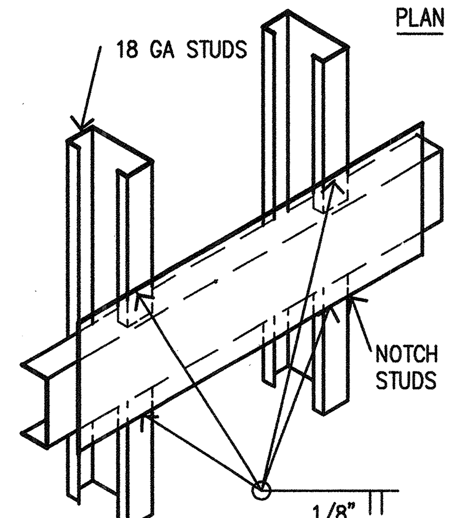

TYPE 'C' BACKING PLATE

1. FOR ALL UPPER WALL HUNG CABINETS W/ MORE THAN 2 SHELVES, WALL MTD EQUIP & MISC. ITEMS WEIGHING LESS THAN 200 LBS/FT
2. LET IN CONT. 6"x14 GA PLATE REINF W/ 4:x16GA TRACK FLUSH TO FACE OF STUD & WELD. SPAN BACKING PLATE 3 STUDS MIN.
3. FOR ADD'L NOTES SEE TYPE "B" PLATE
4. PROVIDE 18 Ga MTL STUDS @ PLATE

11 TYPE "C" BACKING PLATE (HEAVY WT.)
SCALE: NO SCALE
PBACPLTC

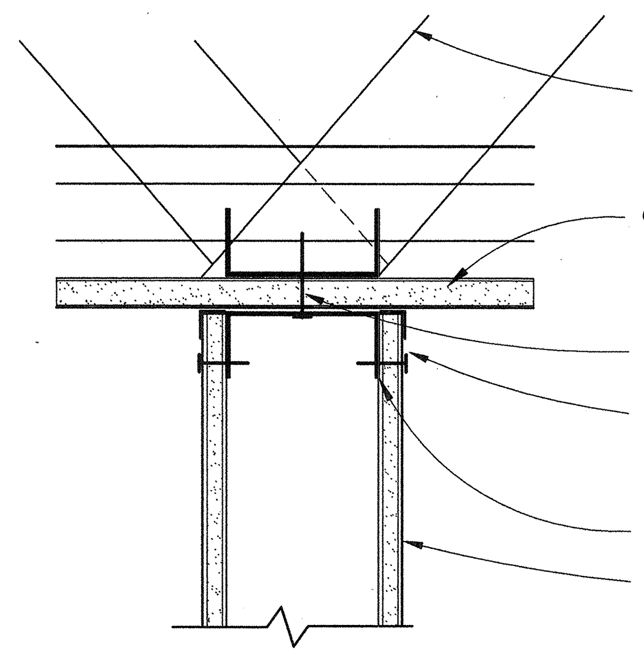

12 TEMP. PART'N HEAD DTL @ GWB SOFFIT
SCALE: 3"=1'-0"
PARTHEAD2

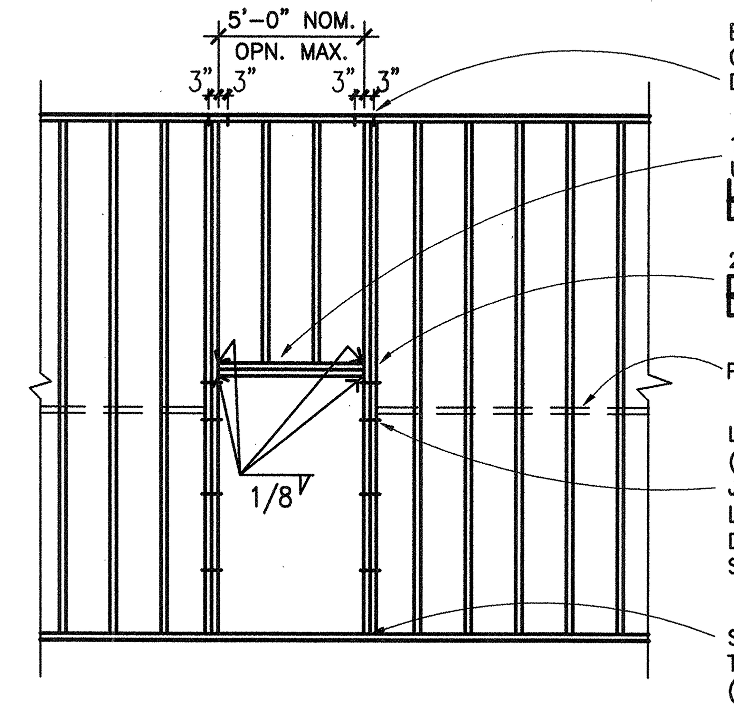

5 DOOR FRAMING FOR OPNGS. UP TO 5'-0"
SCALE: 1/4" = 1'-0"
PDR5OPG1

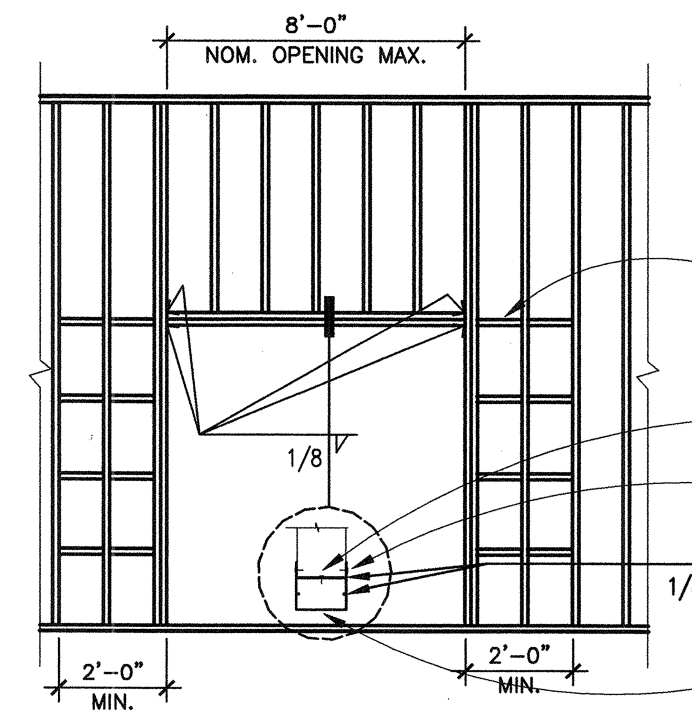

6 DOOR FRAMING FOR OPNGS. UP TO 8'-0"
SCALE: 1/4" = 1'-0"
PDR8OPG1

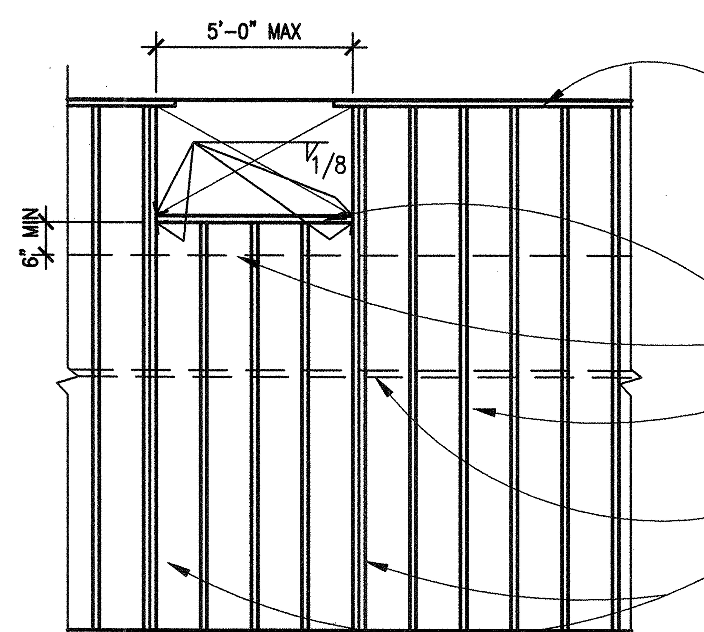

7 FRAMING FOR 5'-0" MAX. OPENINGS
SCALE: 1/4"=1'-0"
PHMFROP5

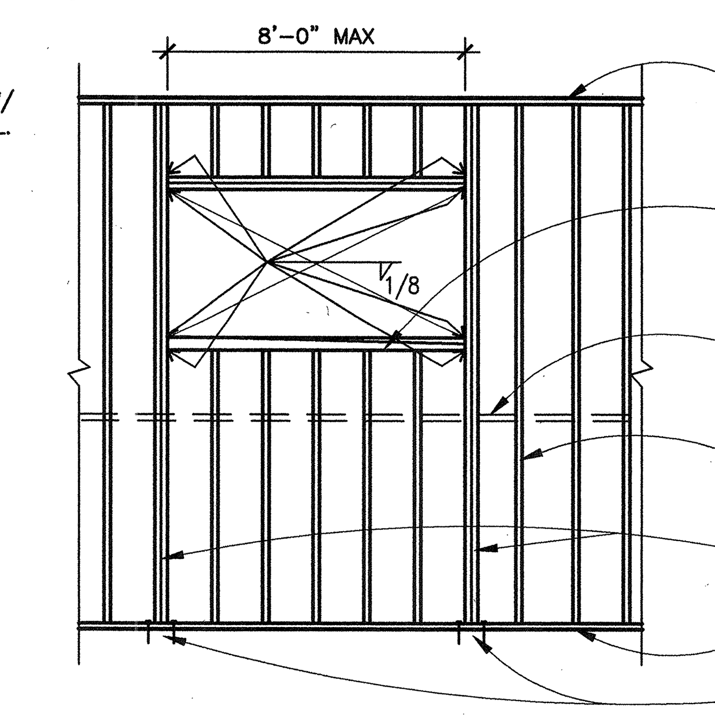

8 CONT. PART. FRMG. FOR OPNGS. TO 8'-0"
SCALE: 1/4"=1'-0"
PHMFROC8

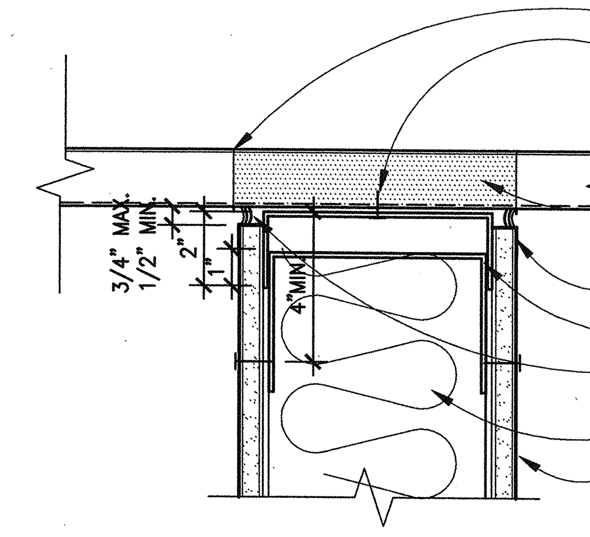

1 PART'N HEAD (PERPENDICULAR TO DECK)
SCALE: 3"=1'-0"
PHDMTLD4

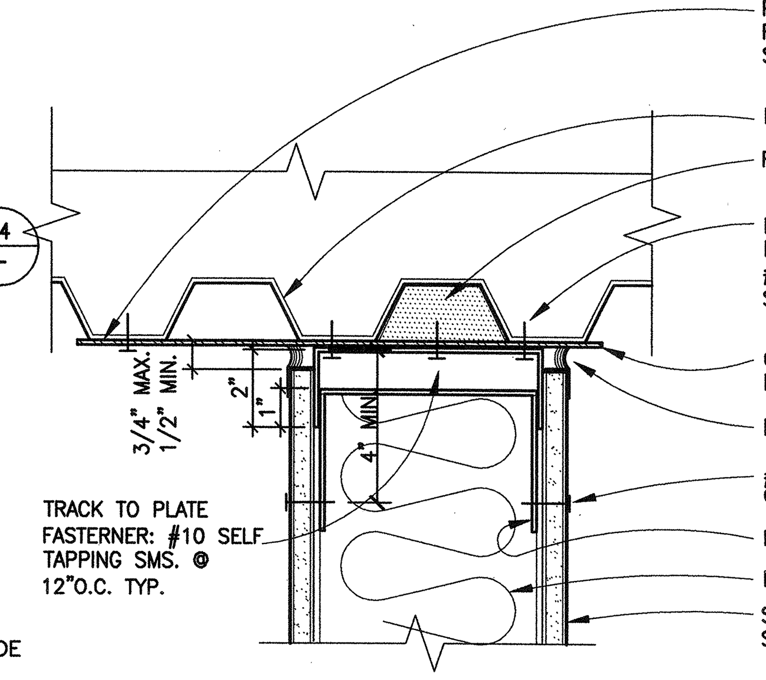

2 PART'N HEAD (PARALLEL TO DECK)
SCALE: 3"=1'-0" U.L. AW-D-0005
PHDMTLDK

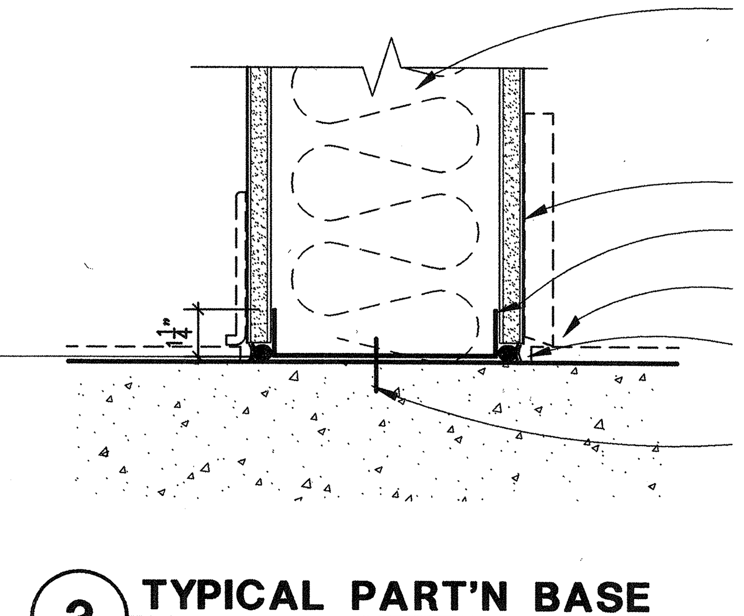

3 TYPICAL PART'N BASE
SCALE: 3"=1'-0"
PSILTYP1

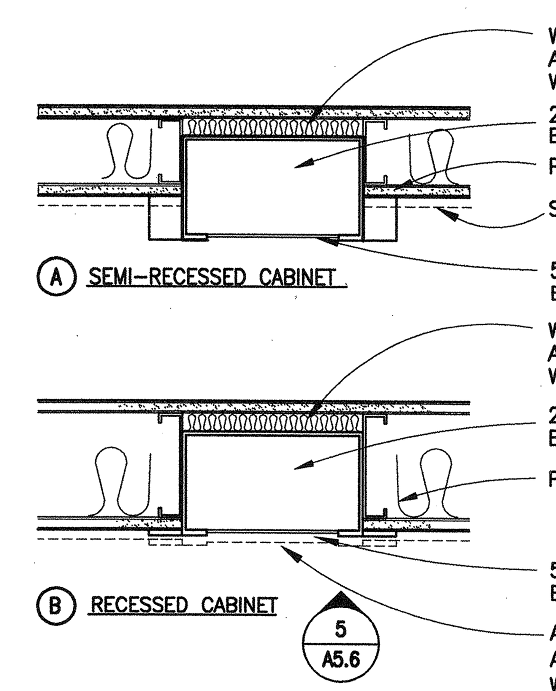

4 F.E.C. @ MTL. STUD WALL
SCALE: 1 1/2"=1'-0"
IFECAB3

BSA
Architects
A California Corporation
350 PACIFIC AVENUE
SAN FRANCISCO, CA 94111
415-781-1526

DIABLO VALLEY COLLEGE

DIABLO VALLEY COLLEGE NEW BOOKSTORE

321 GOLF CLUB RD.
PLEASANT HILL, CALIFORNIA

© 2003 BSA Architects
"All drawings and written material appearing herein constitute the original and unpublished work of the architect and the same may not be duplicated, used, or disclosed without the written consent of the architect."

DATE: 23 JULY, 2004

REVISIONS:

LICENSED ARCHITECT JOHN ASHWORTH No. C26747 REN. 1-31-05 STATE OF CALIFORNIA

BID SET

SHEET TITLE:

PARTITION TYPES & DETAILS

IDENTIFICATION STAMP
DIVISION OF THE STATE ARCHITECT
105925
APPL 01
AC LE FLS ED SS A1
DATE: 5-12-04 JUL 26 2004

BLDG. ID: 098
ID CODE: 312098-109.01-A
DRAWN BY:
CHECKED BY: GL
JOB NO: 0307.10
SHEET A9.2

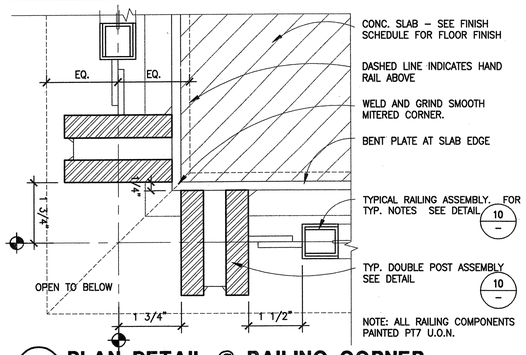

13 PLAN DETAIL @ RAILING CORNER
SCALE: 6"=1'-0"
IPLNRLCR

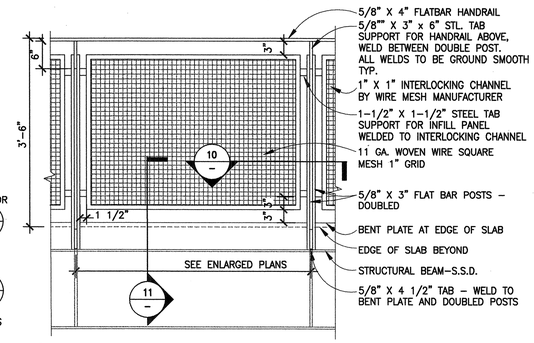

9 ENLARGED GUARD RAIL ELEVATION
SCALE: 3/4"=1'-0"
IRLELEV

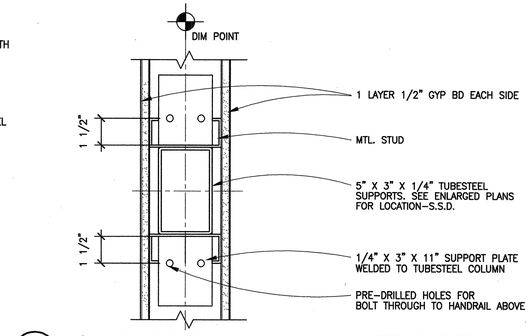

5 LOW PARTITION HANDRAIL ATTACHMENT
SCALE: 3"=1'-0"
IPPLNLW2

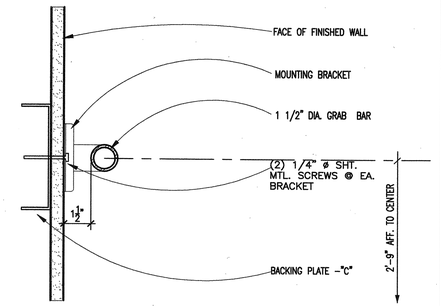

1 GRAB BAR REINFORCEMENT DETAIL
SCALE: 3"=1'-0"
HCgrab1

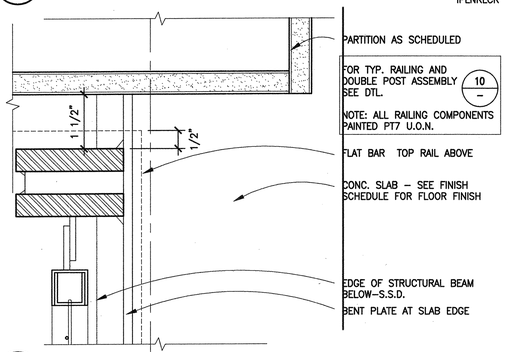

14 PLAN DETAIL @ WALL TERMINATION
SCALE: 6"=1'-0"
IPLNRLTM

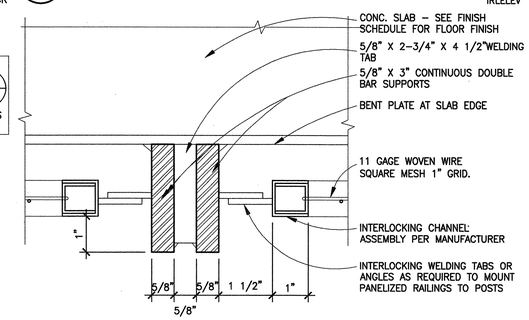

10 PLAN DETAIL @ RAILING TYP
SCALE: 6"=1'-0"
IPLNRAIL

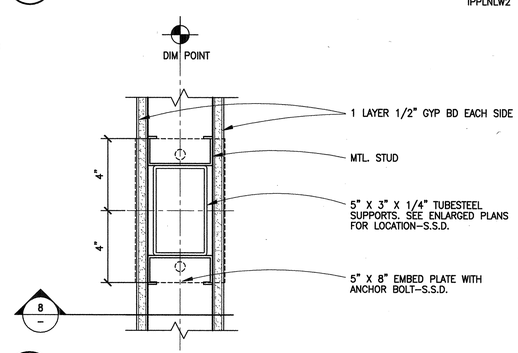

6 TYPICAL LOW PARTITION
SCALE: 3"=1'-0"
IPPLNLW1

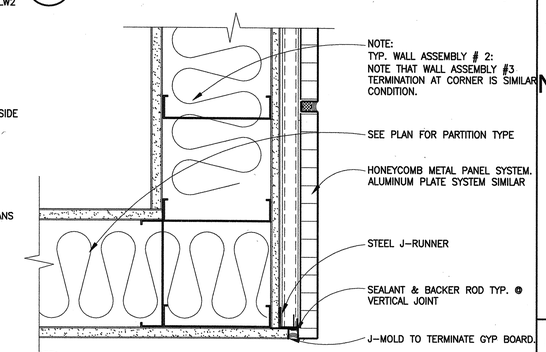

2 TERMINATION OF METAL PANEL @ CORNER
SCALE: 3"=1'-0"
IMTPNLCR

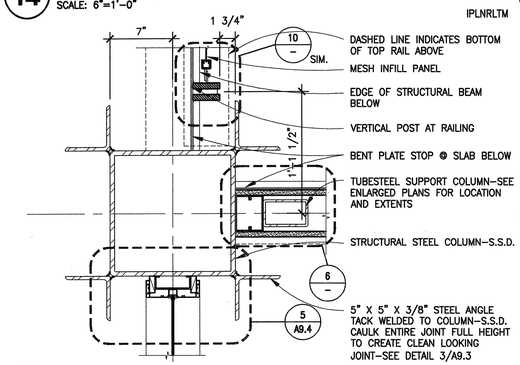

15 INTERSECTION @ COLUMN
SCALE: 1 1/2"=1'-0"
ICOLINTR

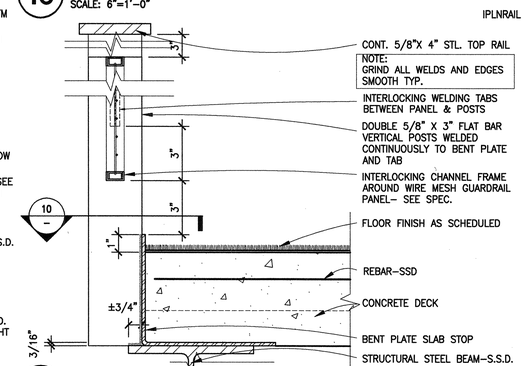

11 TYP. GUARD RAIL DTL.
SCALE: 3"=1'-0"
IBRGRAIL

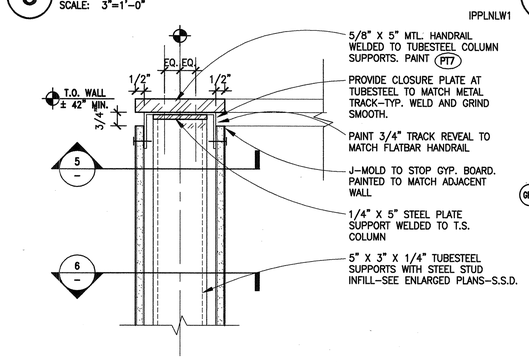

7 BALCONY PARTITION GUARD RAIL
SCALE: 3"=1'-0"
BALCRAIL

3 INTERIOR COLUMN-TOOLED JOINT
SCALE: 3/4"=1'-0"
ICOLJNT1

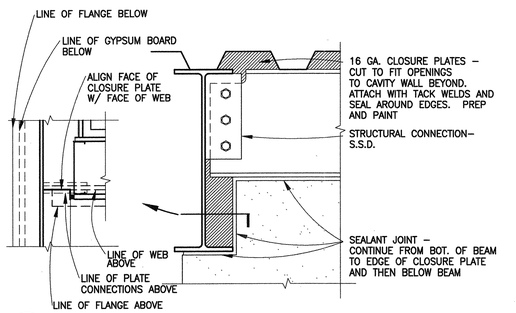

16 TYP. BEAM INTERSECTION CLOSURE
SCALE: 3"=1'-0"
BMINTSEC

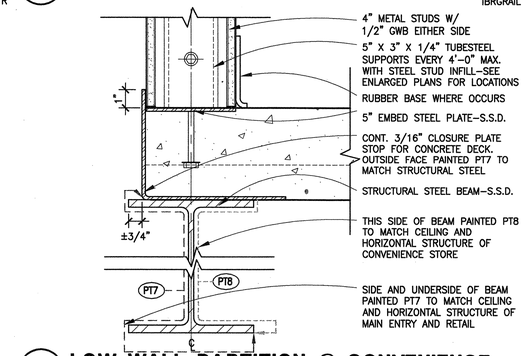

12 LOW WALL PARTITION @ CONVENIENCE
SCALE: 3"=1'-0"
IPTLOWL2

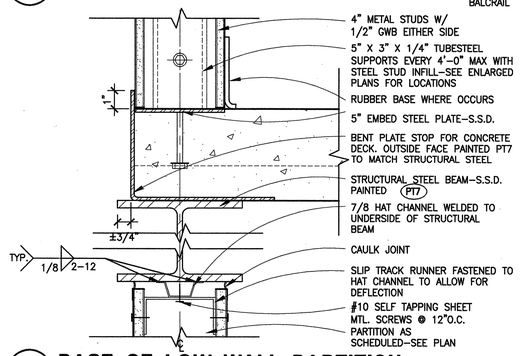

8 BASE OF LOW WALL PARTITION
SCALE: 3"=1'-0"
IPTLOWL1

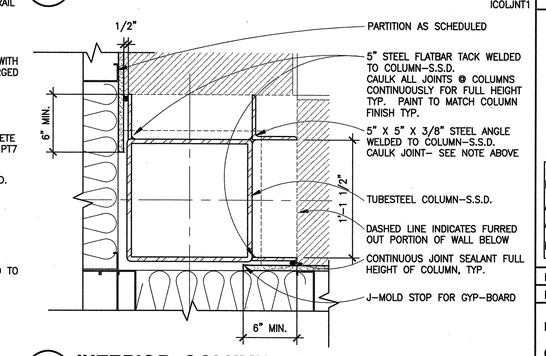

4 INTERIOR COLUMN AT CORNER
SCALE: 1 1/2"=1'-0"
ICOLCRNR

BSA Architects
A California Corporation
350 PACIFIC AVENUE
SAN FRANCISCO, CA 94111
415-781-1526

DIABLO VALLEY COLLEGE

DIABLO VALLEY COLLEGE NEW BOOKSTORE

321 GOLF CLUB RD.
PLEASANT HILL, CALIFORNIA

© 2003 BSA Architects
"All drawings and written material appearing herein constitute the original and unpublished work of the architect and the same may not be duplicated, used, or disclosed without the written consent of the architect."

DATE: 23 JULY, 2004

REVISIONS:

LICENSED ARCHITECT JOHN ARNOWITZ No. C26747 REN. 1-31-05 STATE OF CALIFORNIA

BID SET

SHEET TITLE:
INTERIOR DETAILS

IDENTIFICATION STAMP
DIVISION OF THE STATE ARCHITECT
105925
APPL 01
AC LE FLS ED SS AI
DATE: 5-12-04 JUL 26 2004

BLDG. ID: 098
ID CODE: 312098-109.01-A

DRAWN BY:
CHECKED BY: GL
JOB NO: 0307.10

SHEET A9.3

9/11/03 A09-03.DWG

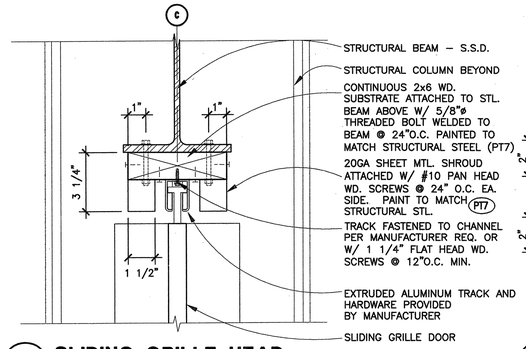

13 SLIDING GRILLE HEAD

SCALE: 3"=1'-0"

ISLGRLHD

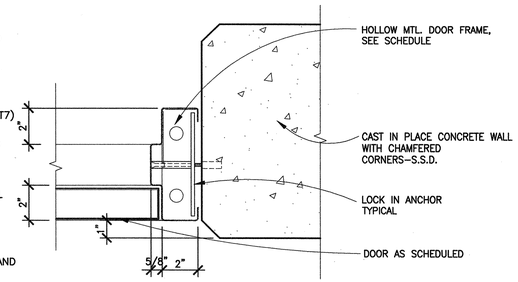

9 INTERIOR H.M. DOOR JAMB @ C.I.P. (HEAD SIM.)

SCALE: 3"=1'-0"

DRHMCNC

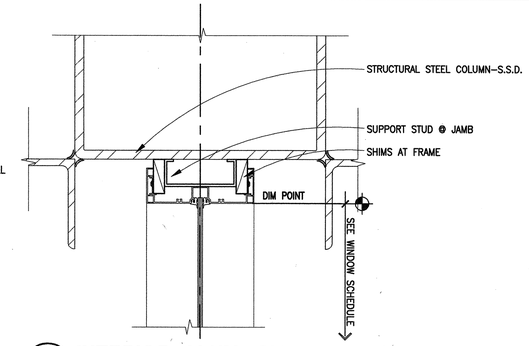

5 INTERIOR ALUM. SIDELIGHT @ COLUMN

SCALE: 3"=1'-0"

IADJMR3

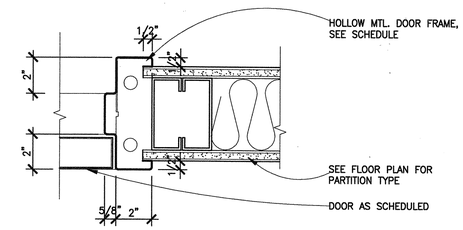

1 TYP. INTERIOR H.M. DOOR JAMB (HEAD SIM.)

SCALE: 3"=1'-0"

DRHMTYP

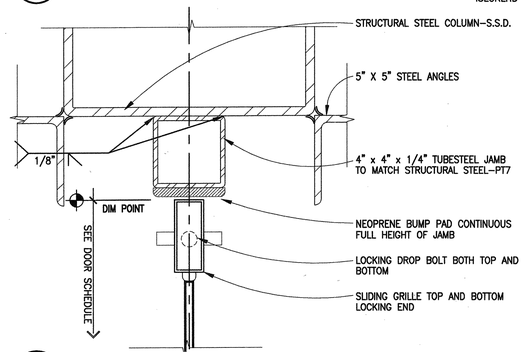

14 SLIDING GRILLE JAMB @ COLUMN

SCALE: 3"=1'-0"

ISLGRLJM

NOT USED

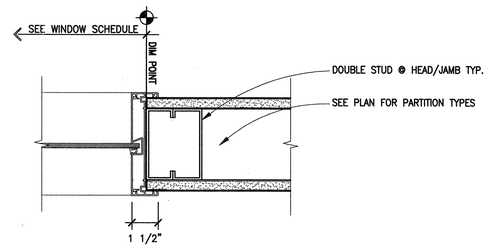

6 INTERIOR ALUM. WINDOW HEAD/JAMB

SCALE: 3"=1'-0"

IAWHDJM1

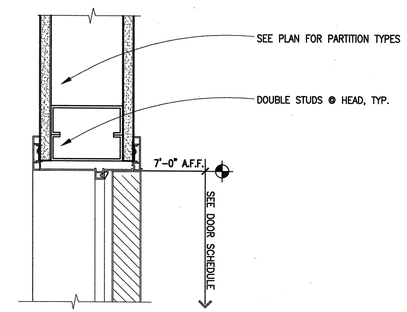

2 INTERIOR ALUM. DOOR HEAD TYP.

SCALE: 3"=1'-0"

IADHED1

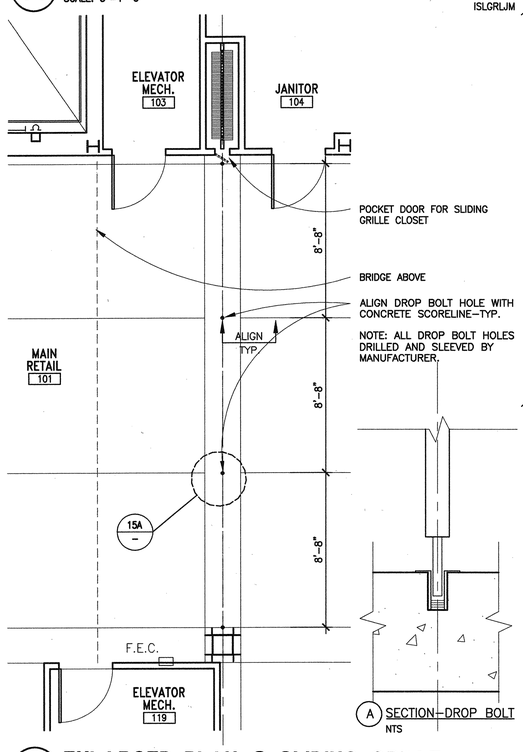

15 ENLARGED PLAN @ SLIDING GRILLE

SCALE: 1/4"=1'-0"

A SECTION–DROP BOLT

NTS

NOT USED

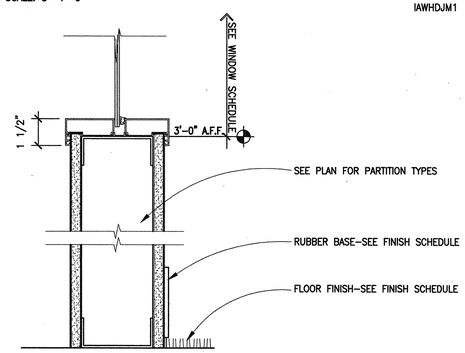

7 INTERIOR ALUM. WINDOW SILL

SCALE: 3"=1'-0"

IAWSILL1

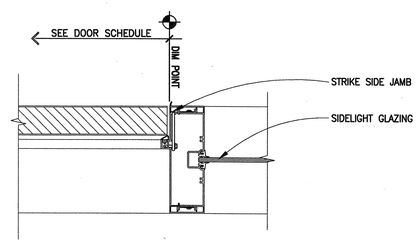

3 INTERIOR ALUM. DOOR JAMB @ SIDELIGHT

SCALE: 3"=1'-0"

IADJMR2

NOT USED

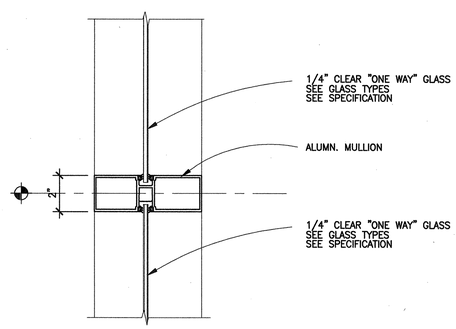

8 TYPICAL ALUMINUM WINDOW MULLION

SCALE: 3"=1'-0"

IALMWMUL

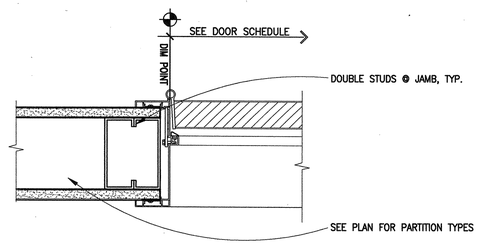

4 INTERIOR ALUM. DOOR JAMB @ G.W.B.

SCALE: 3"=1'-0"

IADJMR1

10/02/03 A09-04.DWG

BSA Architects
A California Corporation
350 PACIFIC AVENUE
SAN FRANCISCO, CA 94111
415-781-1526

DIABLO VALLEY COLLEGE

DIABLO VALLEY COLLEGE NEW BOOKSTORE

321 GOLF CLUB RD.
PLEASANT HILL, CALIFORNIA

© 2003 BSA Architects
"All drawings and written material appearing herein constitute the original and unpublished work of the architect and the same may not be duplicated, used, or disclosed without the written consent of the architect."

DATE: 23 JULY, 2004

REVISIONS:

LICENSED ARCHITECT LORI ASHWORTH No. C26747 REN. 1-31-06 STATE OF CALIFORNIA

BID SET

SHEET TITLE:

INTERIOR DETAILS DOOR & WINDOW

IDENTIFICATION STAMP
DIVISION OF THE STATE ARCHITECT
APPL 01 105925
AC LE FLS ED SS A1
DATE: 5-12-04 JUL 26 2004

BLDG. ID: 098
ID CODE: 312098-109.01-A

DRAWN BY:
CHECKED BY: GL
JOB NO: 0307.10

SHEET A9.4

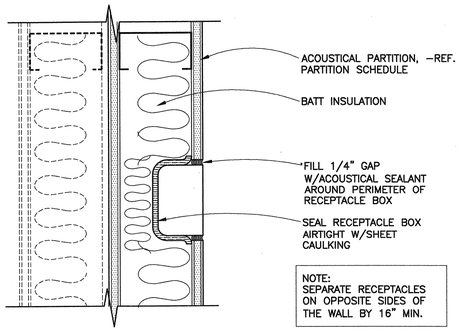

13 RECEPTACLE @ ACOUSTICAL PARTITION
SCALE: 3"=1'-0"
IRECPWL1

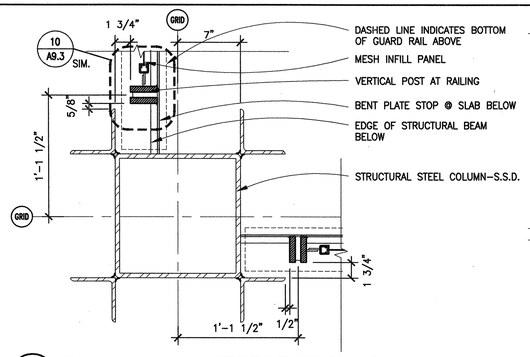

9 GUARD RAIL INTERSECTION @ COLUMN
SCALE: 1 1/2"=1'-0"
ICOLINT2

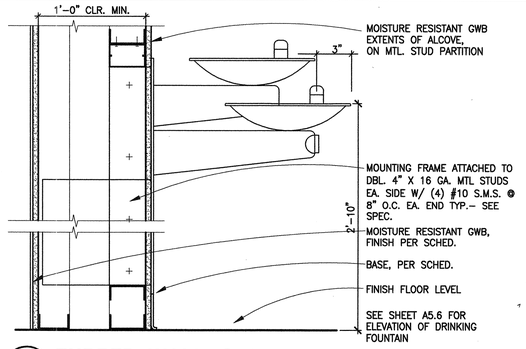

5 FURRED WALL @ DRINKING FOUNTAIN
SCALE: 1 1/2"=1'-0"
IDFPART1

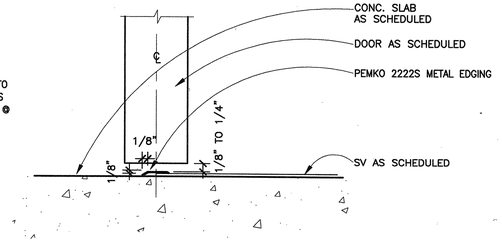

1 THRESHOLD @ SV TO CONC.
SCALE: 6"=1'-0"
TSRCONC

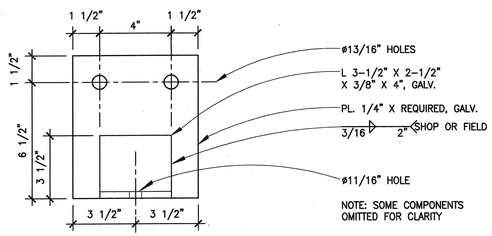

14 DISPLAY COOLER TIE-DOWN BRACKET
SCALE: 3"=1'-0"
ICOOLAN2

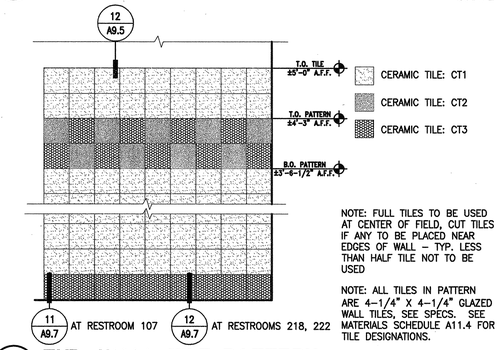

10 TYP. WALL TILE PATTERN
SCALE: 1"=1'-0"
ICTPATWL

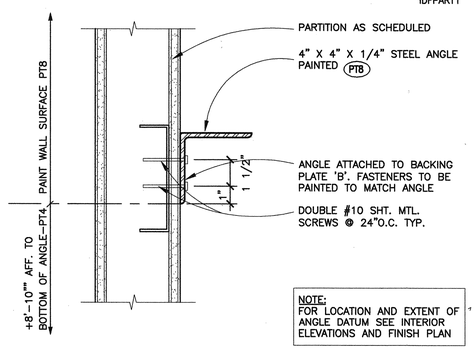

6 ANGLE CORNICE @ CONVENIENCE
SCALE: 3"=1'-0"
IAGLDATM

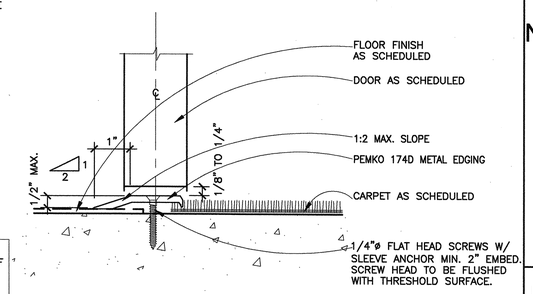

2 THRESHOLD @ CPT TO CONCRETE
SCALE: 6"=1'-0"
TSCPTCNC

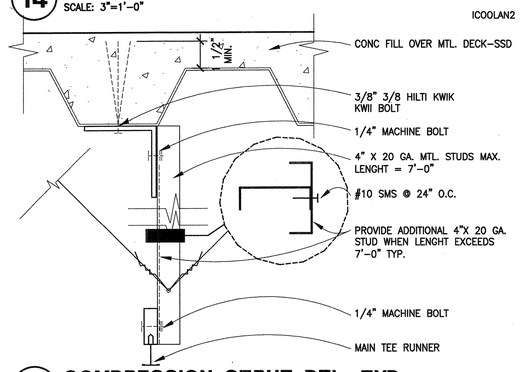

15 COMPRESSION STRUT DTL. TYP.
SCALE: 3"=1'-0"
ICCOMST1

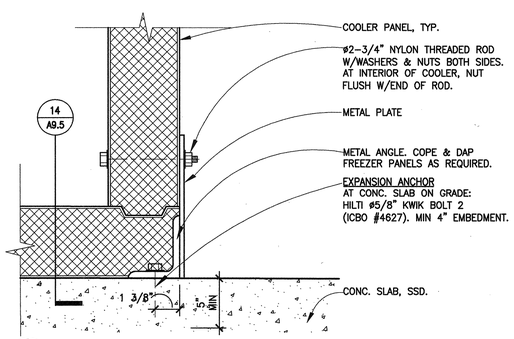

11 DISPLAY COOLER TIE-DOWN
SCALE: 3"=1'-0"
ICOOLAN1

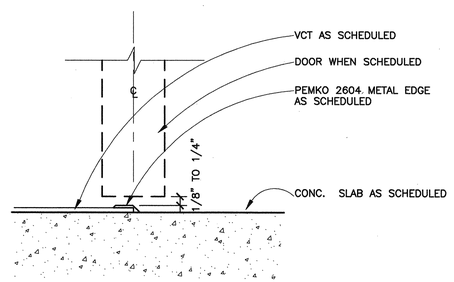

7 TRANSITION @ VCT TO CONC
SCALE: 6"=1'-0"
TVCTCNC

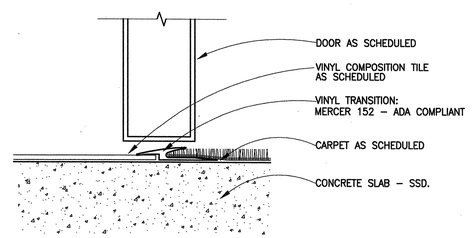

3 TRANSITION DETAIL - VCT TO CPT
SCALE: 6"=1'-0"
TRFCPT

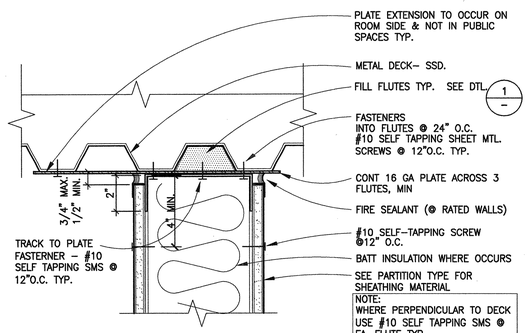

16 HUNG PART'N HEAD (PARALLEL TO DECK)
SCALE: 3"=1'-0"
PHDHUNG1

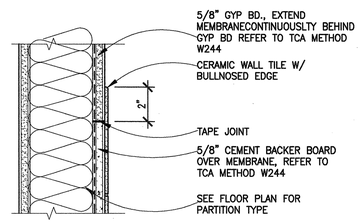

12 CERAMIC TILE WALL DETAIL
SCALE: 3"=1'-0"
IWALLTIL

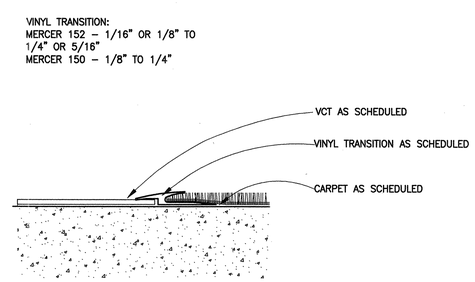

8 TRANSITION DETAIL - VCT TO CPT
SCALE: 6"=1'-0"
TSVCPT

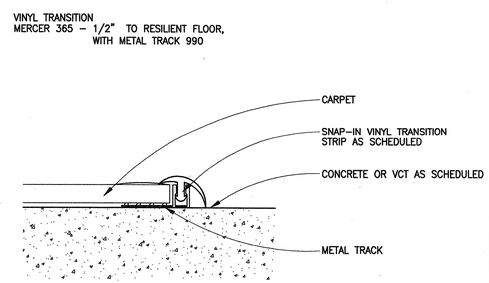

4 TRANSITION DETAIL
SCALE: 6"=1'-0"
TVINTILA

BSA Architects
A California Corporation
350 PACIFIC AVENUE
SAN FRANCISCO, CA 94111
415–781–1526

DIABLO VALLEY COLLEGE

DIABLO VALLEY COLLEGE NEW BOOKSTORE

321 GOLF CLUB RD.
PLEASANT HILL, CALIFORNIA

© 2003 BSA Architects
"All drawings and written material appearing herein constitute the original and unpublished work of the architect and the same may not be duplicated, used, or disclosed without the written consent of the architect."

DATE: 23 JULY, 2004

REVISIONS:

LICENSED ARCHITECT LORIA ASHROFF No. C26747 REN. 1-31-05 STATE OF CALIFORNIA

BID SET

SHEET TITLE:
INTERIOR DETAILS FLOOR & MISC.

IDENTIFICATION STAMP
DIVISION OF THE STATE ARCHITECT
105925
APPL 01
AC LE FLS ED SS AT
DATE: 5-12-04 JUL 26 2004

BLDG. ID: 098
ID CODE: 312098-109.01-A

DRAWN BY:
CHECKED BY: GL
JOB NO: 0307.10

SHEET A9.5

10/02/03 A09-05.DWG

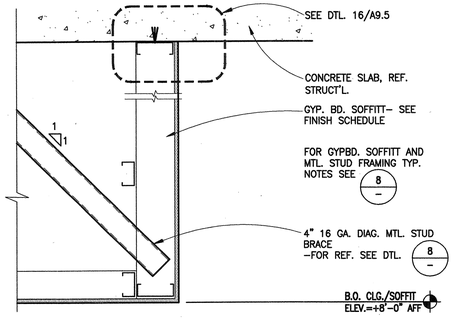

13 TYPICAL GYP. BOARD SOFFIT
SCALE: 1"=1'–0"

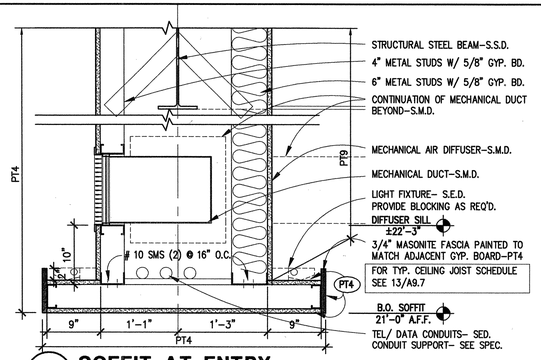

9 SOFFIT AT ENTRY
SCALE: 1"=1'–0"
IENRSOFT

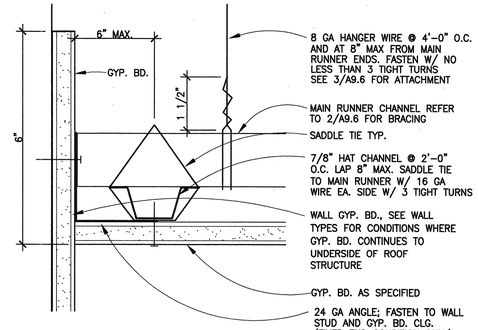

5 GYP. BD. SUSP. CLG. @ WALL
SCALE: 6"=1'–0"
ISSPCLGE

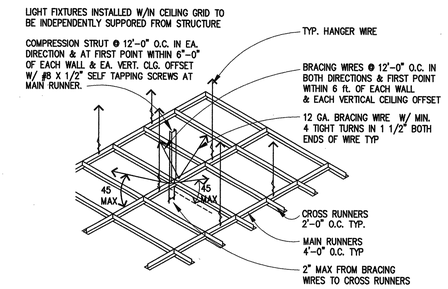

1 SUSPENDED CEILING GRID ATTACHMENT
SCALE: NONE
ICLGGRD1

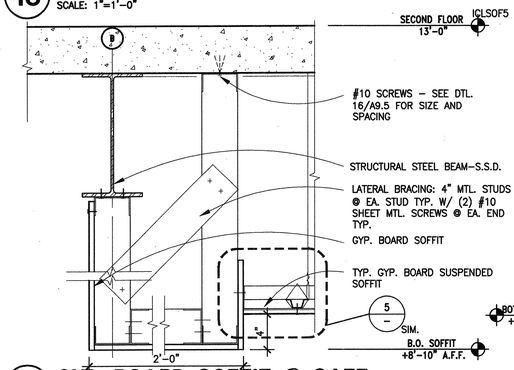

14 GYP. BOARD SOFFIT @ CAFE
SCALE: 1 1/2"=1'–0"
ICLSOFT6

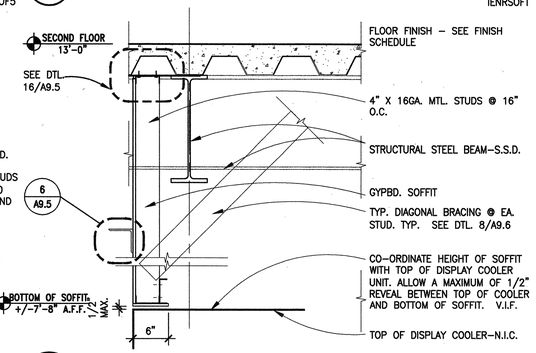

10 GYB. BOARD SOFFIT @ COOLERS
SCALE: 1"=1'–0"
ICLSOFT1

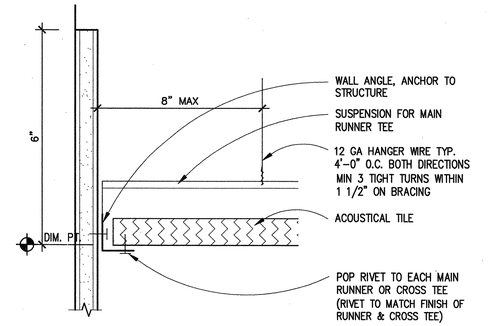

6 SQ. CUT SUSP. ACOUSTIC CLG. (FXD END)
SCALE: 6"=1'–0"
ISUSPFIX

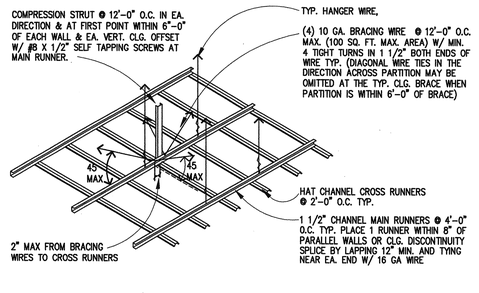

2 SUSP. GYP. BD. CLG. GRID ATTACHMENT
SCALE: NONE
ICLGGRD2

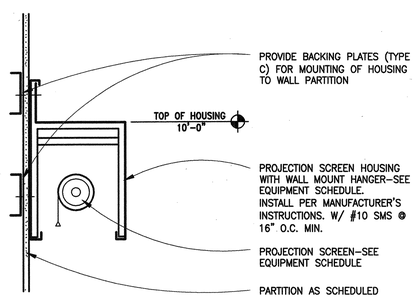

15 PROJECTION SCREEN @ BREAK RM.
SCALE: 1 1/2"=1'–0"
PROJSCRN

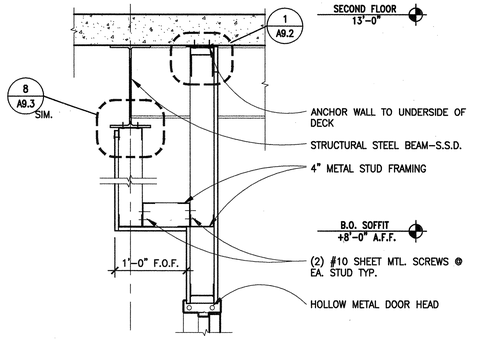

11 GYB. BOARD SOFFIT @ SERVICE
SCALE: 1"=1'–0"
ICLSOFT2

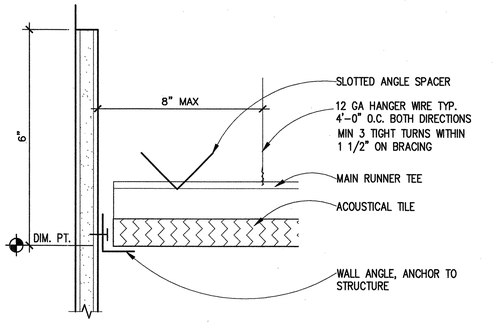

7 SQ. CUT SUSP. ACOUSTIC CLG.(FREE END)
SCALE: 6"=1'–0"
ISUSPFRE

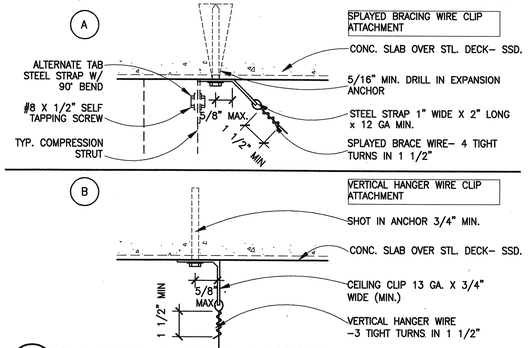

3 HANGER & WIRE CONNECTION
SCALE: 6"=1'–0"
ICLGHNGa

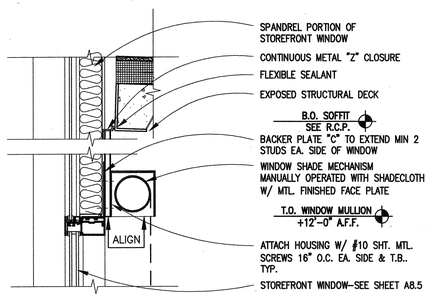

16 WINDOW SHADE POCKET @ STOREFRONT
SCALE: 1 1/2"=1'–0"
CLGRECSHD3

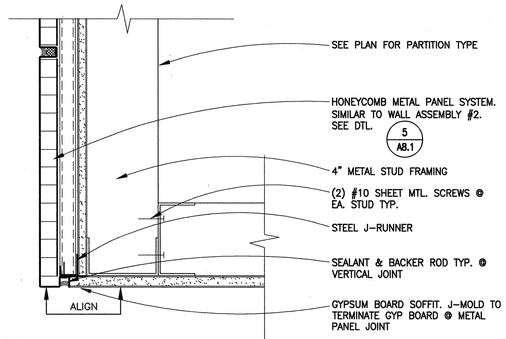

12 SOFFIT @ TERMINATION OF METAL PANEL
SCALE: 3"=1'–0"
ICLSOFT4

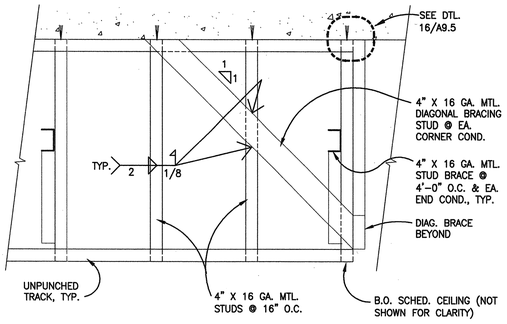

8 TYP. DIAGONAL BRACING @ SOFFITS
SCALE: 1"=1'–0"
DIAGBRAC

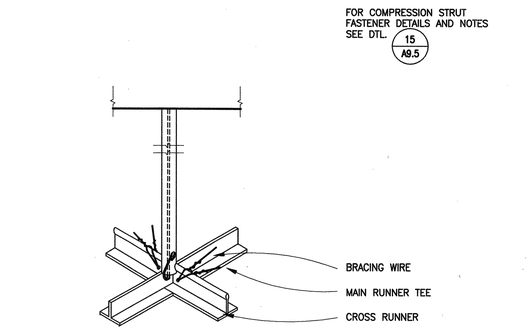

4 ISOMETRIC AT THRUST STRUT
SCALE: 6"=1'–0"
iclggrdb

BSA Architects
A California Corporation
350 PACIFIC AVENUE
SAN FRANCISCO, CA 94111
415–781–1526

DIABLO VALLEY COLLEGE

DIABLO VALLEY COLLEGE NEW BOOKSTORE

321 GOLF CLUB RD.
PLEASANT HILL, CALIFORNIA

© 2003 BSA Architects
"All drawings and written material appearing herein constitute the original and unpublished work of the architect and the same may not be duplicated, used, or disclosed without the written consent of the architect."

DATE: 23 JULY, 2004

REVISIONS:

LICENSED ARCHITECT JOHN ASHWORTH No. C26747 REN. 1-31-05 STATE OF CALIFORNIA

BID SET

SHEET TITLE:

INTERIOR DETAILS – CEILING

IDENTIFICATION STAMP
DIVISION OF THE STATE ARCHITECT
105925
APPL 01
AC LE FLS ED SS AT
DATE: 5-12-04 JUL 2 6 2004

BLDG. ID: 098	
ID CODE: 312098–109.01–A	
DRAWN BY:	SHEET
CHECKED BY: GL	A9.6
JOB NO: 307.10	

11-30-01 A9-06.DWG

CEILING JOIST SIZE	MANUF. NUMBER	JOIST SPACING	MAX. SPAN GYP.BD.	MAX. SPAN PLASTER
3 5/8 X 20 GA	362S16233	16" O.C.	14'-5"	11'-1"
3 5/8 X 18 GA	362S16243	16" O.C.	15'-8"	12'-1"
6 X 20 GA	600S16233	16" O.C.	20'-4"	16'-6"
6 X 18 GA	600S16243	16" O.C.	21'-10"	17'-11"

NOTE: 1. JOIST SPANS BASED ON DEFLECTION LIMIT = L/360 AND LATERAL SUPPORT @ MIDSPAN

JOIST PROPERTIES				
JOIST SIZE	A	Ixx	Sxx	Rxx
3 5/8 X 20 GA	0.262	0.551	0.304	1.45
3 5/8 X 18 GA	0.340	0.710	0.392	1.445
6 X 20 GA	0.344	1.793	0.598	2.282
6 X 18 GA	0.447	2.316	0.772	2.276

13 CEILING JOIST SCHEDULE
SCALE: 3"=1'-0" ICBO No: ER-4943P
ICLGSCHD

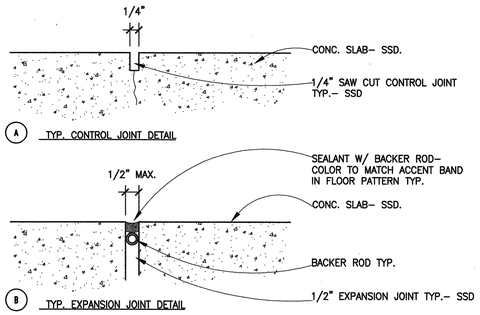

9 TYP. CONC. SLAB EXPANSION JOINT DTL.
SCALE: 6"=1'-0"
ICONEXP1

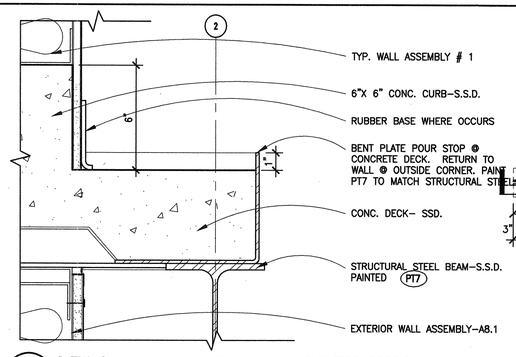

5 LEDGE TRANSITION @NORTH WALL
SCALE: 3"=1'-0"
IPTLEDG1

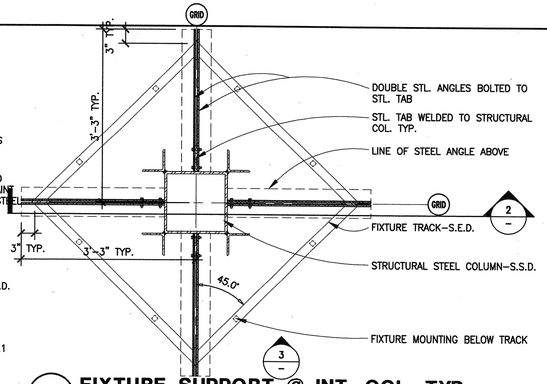

1 FIXTURE SUPPORT @ INT. COL. TYP.
SCALE: 3/4"=1'-0"
ICOLFXT1

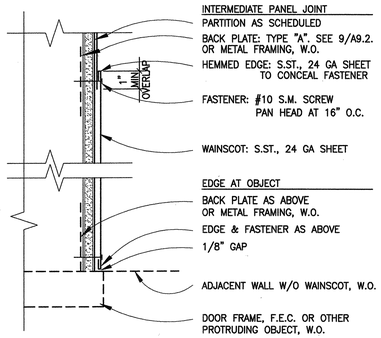

14 TYPICAL METAL WAINSCOT TERMINATIONS
SCALE: 3"=1'-0"
STSTLWN3

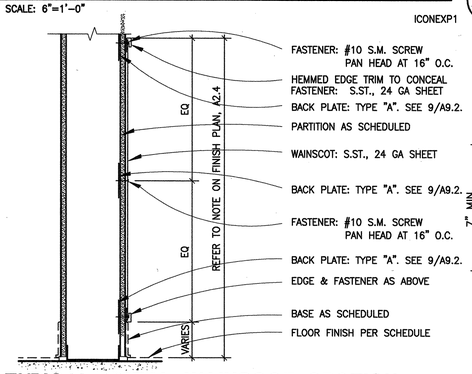

10 TYPICAL METAL WAINSCOT SECTION
SCALE: 1 1/2"=1'-0"
STSTLWN1

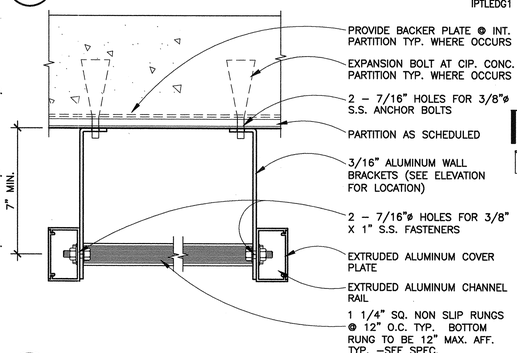

6 TYP. ACCESS LADDER BRACKET DETAIL
SCALE: 3"=1'-0"
ILADBRK

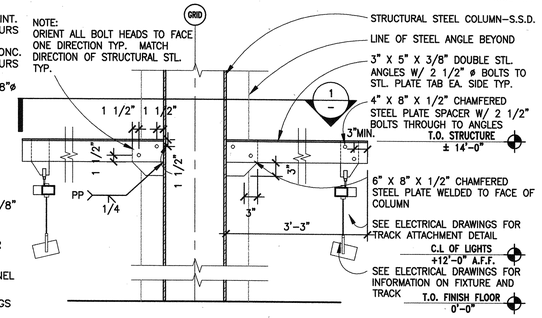

2 LIGHT FIXTURE DTL. @ COLUMN
SCALE: 3/4"=1'-0"
ICOLFXT2

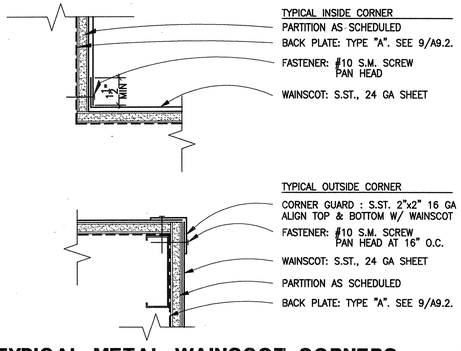

15 TYPICAL METAL WAINSCOT CORNERS
SCALE: 3"=1'-0"
STSTLWN4

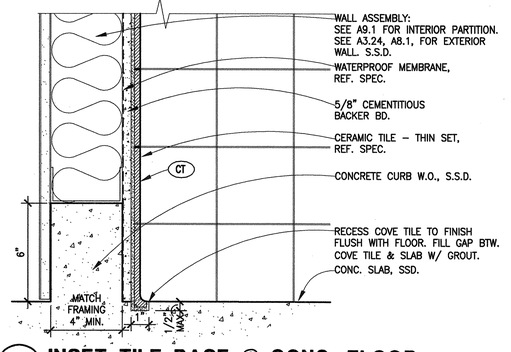

11 INSET TILE BASE @ CONC. FLOOR
SCALE: 3"=1'-0"
ICERTL2

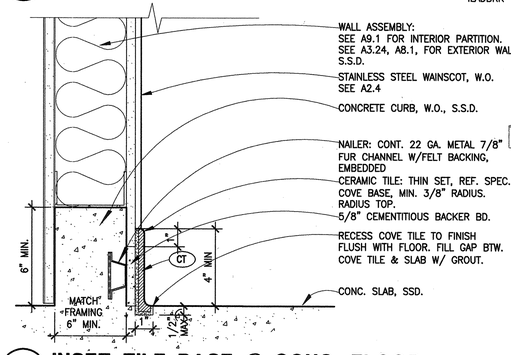

7 INSET TILE BASE @ CONC. FLOOR
SCALE: 3"=1'-0"
ICERTL3

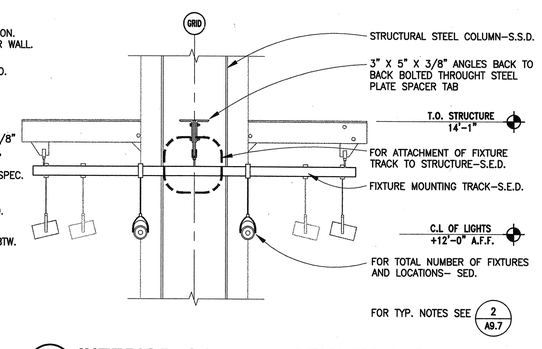

3 INTERIOR COLUMN ELEVATION @ FIXTURE
SCALE: 3/4"=1'-0"
ICOLJNT1

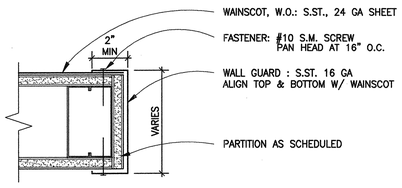

16 WALL GUARD
SCALE: 3"=1'-0"
STSTLWN5

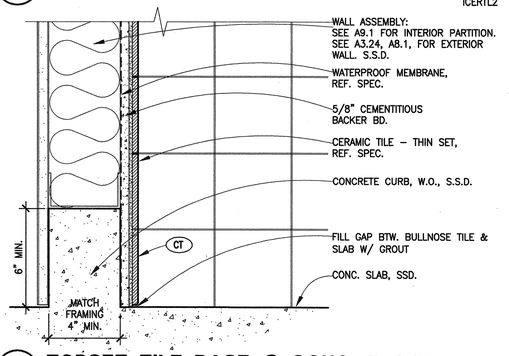

12 TOPSET TILE BASE @ CONC. FLOOR
SCALE: 3"=1'-0"
ICERTL1

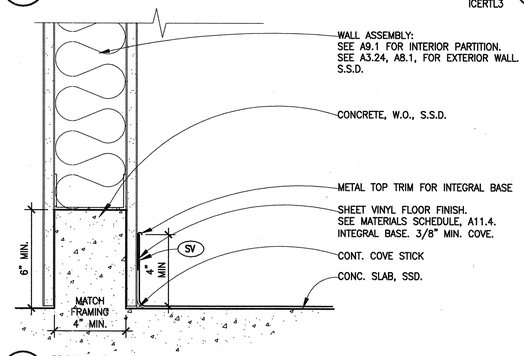

8 INTEGRAL SHEET VINYL BASE
SCALE: 3"=1'-0"
IFLRVNL

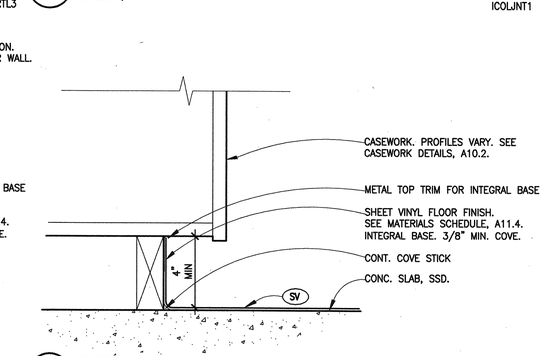

4 INTEGRAL SHEET VINYL BASE, CASEWORK
SCALE: 3"=1'-0"
IFLRVNL2

7-4-04 A9-07.DWG

BSA Architects
A California Corporation
350 PACIFIC AVENUE
SAN FRANCISCO, CA 94111
415-781-1526

DIABLO VALLEY COLLEGE

DIABLO VALLEY COLLEGE NEW BOOKSTORE

321 GOLF CLUB RD.
PLEASANT HILL, CALIFORNIA

© 2003 BSA Architects
"All drawings and written material appearing herein constitute the original and unpublished work of the architect and the same may not be duplicated, used, or disclosed without the written consent of the architect."

DATE: 23 JULY, 2004

REVISIONS:

LICENSED ARCHITECT JOHN ASHWORTH No. C26747 REN. 1-31-05 STATE OF CALIFORNIA

BID SET

SHEET TITLE:
INTERIOR DETAILS - MISC.

IDENTIFICATION STAMP
DIVISION OF THE STATE ARCHITECT
APPL 01 105925
AC LF FLS EQ SS AM
DATE: 5-12-05 JUL 26 2004

BLDG. ID: 098
ID CODE: 312098-109.01-A

DRAWN BY:
CHECKED BY: GL
JOB NO: 0307.10

SHEET A9.7

NOT USED

NOT USED

NOT USED

NOT USED

NOT USED

NOT USED

NOT USED

NOT USED

NOT USED

NOT USED

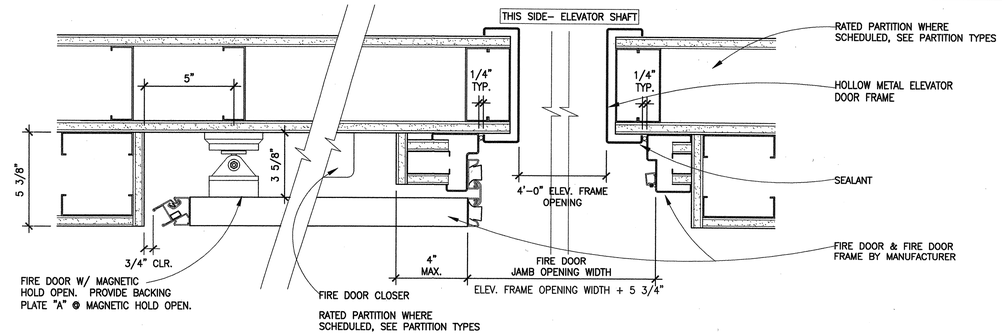

5 ELEVATOR FIRE DOOR PLAN SECTION

SCALE: 3"=1'–0"

DELFRDR1

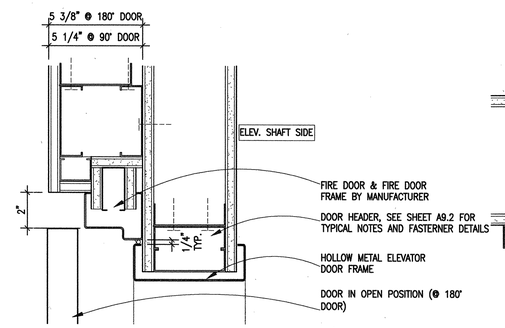

6 ELEVATOR FIRE DOOR HEAD

SCALE: 3"=1'–0"

EFRDRHD1

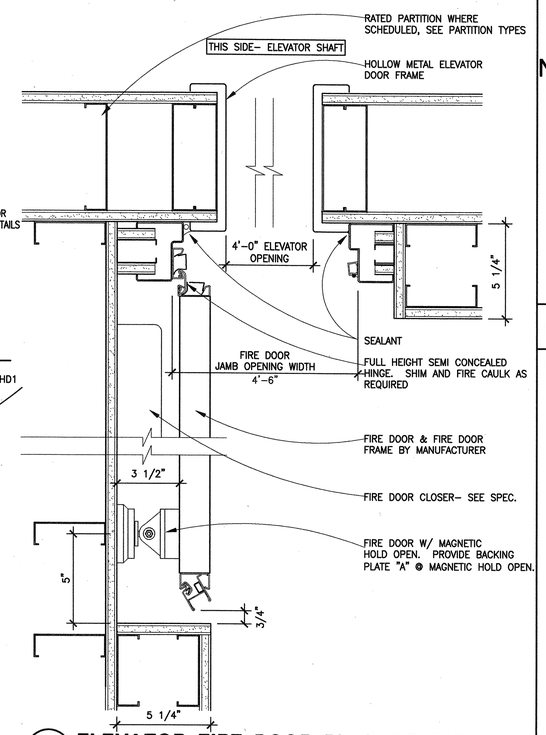

3 ELEVATOR FIRE DOOR PLAN SECTION

SCALE: 3"=1'–0"

DELFRDR1

BSA Architects
A California Corporation
350 PACIFIC AVENUE
SAN FRANCISCO, CA 94111
415–781–1526

DIABLO VALLEY COLLEGE

DIABLO VALLEY COLLEGE NEW BOOKSTORE

321 GOLF CLUB RD.
PLEASANT HILL, CALIFORNIA

© 2003 BSA Architects
"All drawings and written material appearing herein constitute the original and unpublished work of the architect and the same may not be duplicated, used, or disclosed without the written consent of the architect."

DATE: 23 JULY, 2004

REVISIONS:

LICENSED ARCHITECT JOHN ASHWORTH No. C26747 REN. 1–31–05 STATE OF CALIFORNIA

BID SET

SHEET TITLE:

INTERIOR DETAILS DOOR & WINDOW

IDENTIFICATION STAMP
DIVISION OF THE STATE ARCHITECT
105925
APPL 01
AC LE FLS EO SS AY
DATE: 5-12-04 JUL 26 2004

BLDG. ID: 098
ID CODE: 312098–109.01–A

DRAWN BY:
CHECKED BY: GL
JOB NO: 0307.10

SHEET A9.8

4/29/04 A09–08.DWG

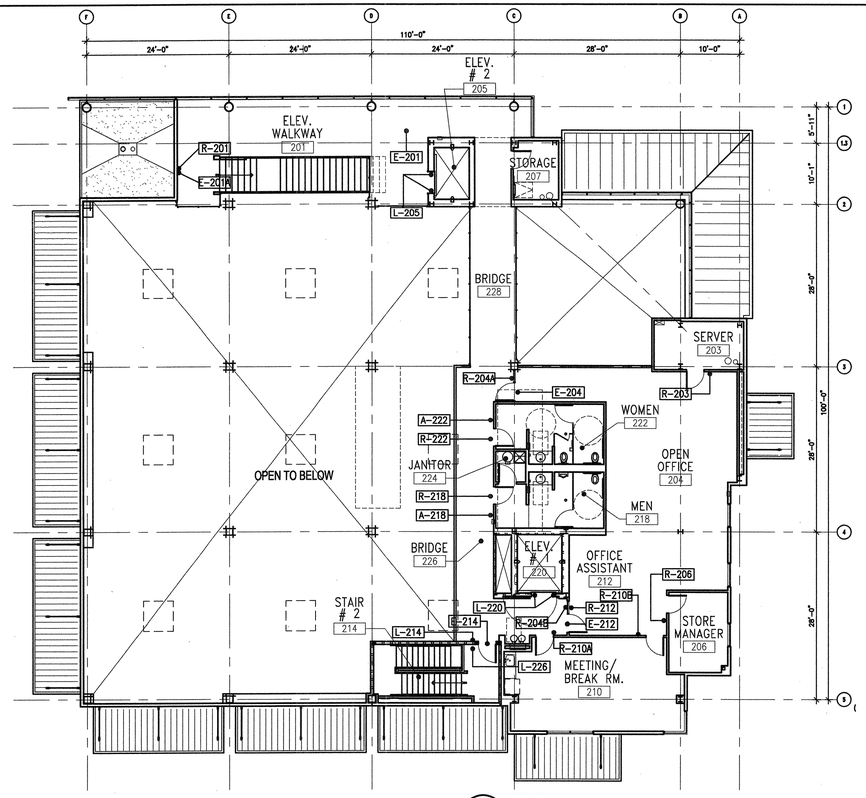

3 SIGNAGE PLAN - SECOND FLOOR

N.T.S. PLAN-2

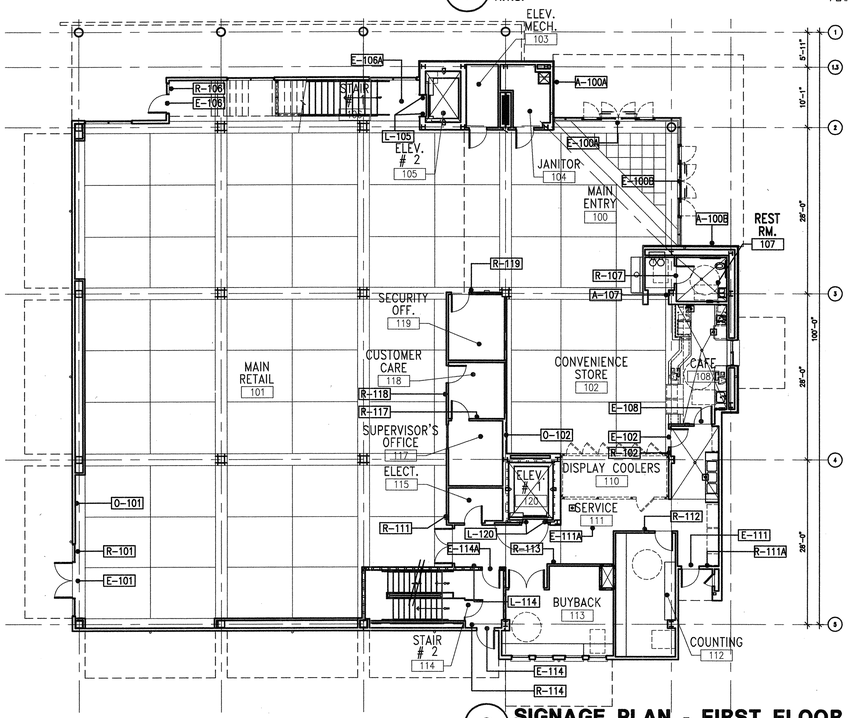

2 SIGNAGE PLAN - FIRST FLOOR

N.T.S. PLAN-1

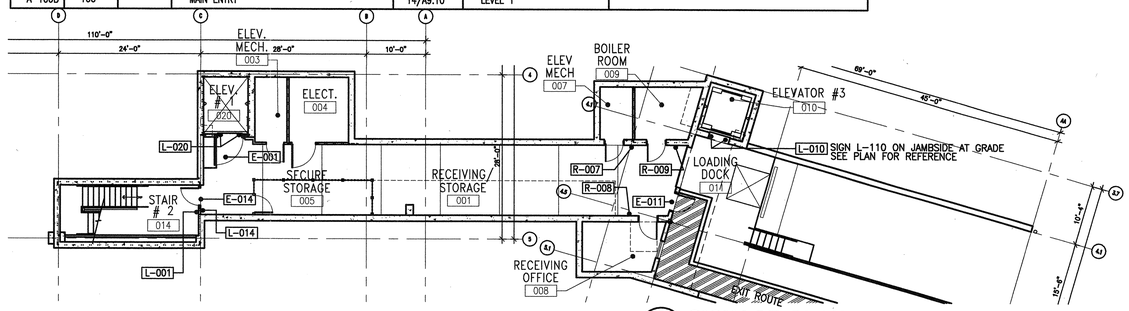

1 SIGNAGE PLAN - BASEMENT FLOOR

N.T.S. PLAN-0

SIGN SCHEDULE

SIGNAGE NUMBER	ROOM NUMBER	DOOR NUMBER	ENTRY TO ROOM NAME	DETAIL REFERENCE	CONTENT	REMARKS
R-007	007		ELEVATOR MECH. ROOM	9/A9.10	ROOM TITLE	
R-008	008		RECEIVING OFFICE	9/A9.10	ROOM TITLE	
R-009	009		BOILER ROOM	9/A9.10	ROOM TITLE	
R-107	107		RESTROOM	6/A9.10	RESTROOM	
A-107	107	107	RESTROOM	7/A9.10	RESTROOM	
R-101	101		EXIT	9/A9.10	EXIT	
R-102	102		SERVICE	9/A9.10	EXIT ROUTE	
R-106	106		EXIT	9/A9.10	EXIT	
R-111A	111		EXIT	9/A9.10	EXIT	
R-111	111		SERVICE	9/A9.10	EXIT ROUTE	
R-112	112		COUNTING	9/A9.10	ROOM TITLE	
R-113	113		BUYBACK	9/A9.10	ROOM TITLE	
R-114	114		EXIT	9/A9.10	EXIT	
R-117	117		SUPERVISOR'S OFFICE	9/A9.10	ROOM TITLE	
R-118	118		CUSTOMER CARE	9/A9.10	ROOM TITLE	
R-119	119		SECURITY OFFICE	9/A9.10	ROOM TITLE	
R-201	201		ELEVATED WALKWAY	9/A9.10	EXIT ROUTE	
R-203	203		SERVER	9/A9.10	ROOM TITLE	
R-204A	203		OPEN OFFICE	9/A9.10	ROOM TITLE	
R-204B	203		OPEN OFFICE	9/A9.10	ROOM TITLE	
R-206	206		STORE MANAGER	9/A9.10	ROOM TITLE	
R-207	207		STORAGE	9/A9.10	ROOM TITLE, MAX. LOAD 200PSF	
R-210A	210		MEETING/BREAK ROOM	9/A9.10	ROOM TITLE	
R-210B	210		MEETING/BREAK ROOM	9/A9.10	ROOM TITLE	
R-212	212		OFFICE ASSISTANT	9/A9.10	EXIT ROUTE	
R-218	218		WOMENS RESTROOM	2/A9.10	WOMENS RESTROOM	
A-218	218	218	WOMENS RESTROOM	3/A9.10	RESTROOM	
R-222	222		MENS RESTROOM	4/A9.10	MENS RESTROOM	
A-222	222	222	MENS RESTROOM	5/A9.10	RESTROOM	
E-001	001		RECEIVING/STORAGE	11,12/A9.10	EXIT	CEILING MOUNTED, SEE ELECTRICAL DRAWINGS
E-011	011		LOADING DOCK	11,12/A9.10	EXIT	SEE ELECTRICAL DRAWINGS
E-014	014		STAIR #2	11,12/A9.10	EXIT	SEE ELECTRICAL DRAWINGS
E-100A	100	100A,B	MAIN ENTRY	11,12/A9.10	EXIT	SEE ELECTRICAL DRAWINGS
E-100B	100	100C,D	MAIN ENTRY	11,12/A9.10	EXIT	SEE ELECTRICAL DRAWINGS
E-101	101	101	MAIN RETAIL	11,12/A9.10	EXIT	SEE ELECTRICAL DRAWINGS
E-102	102	111A	CONVENIENCE STORE	11,12/A9.10	EXIT	SEE ELECTRICAL DRAWINGS
E-106	106	106	STAIR #1	11,12/A9.10	EXIT	SEE ELECTRICAL DRAWINGS
E-106A	106		STAIR #1	11,12/A9.10	EXIT	CEILING MOUNTED, SEE ELECTRICAL DRAWINGS
E-108	108	108	CAFE	11,12/A9.10	EXIT	SEE ELECTRICAL DRAWINGS
E-111	111	111A	SERVICE	11,12/A9.10	EXIT	SEE ELECTRICAL DRAWINGS
E-111A	111		SERVICE	11,12/A9.10	EXIT	CEILING MOUNTED, SEE ELECTRICAL DRAWINGS
E-114	114	114A	STAIR #2	11,12/A9.10	EXIT	SEE ELECTRICAL DRAWINGS
E-114A	114	114C	STAIR #2	11,12/A9.10	EXIT	SEE ELECTRICAL DRAWINGS
E-201	201		ELEVATOR WALKWAY	11,12/A9.10	EXIT	CEILING MOUNTED, SEE ELECTRICAL DRAWINGS
E-201A	201		ELEVATOR WALKWAY	11,12/A9.10	EXIT	SEE ELECTRICAL DRAWINGS
E-204	204	204	OPEN OFFICE	11,12/A9.10	EXIT	SEE ELECTRICAL DRAWINGS
E-212	212	212	OFFICE ASSISTANT	11,12/A9.10	EXIT	SEE ELECTRICAL DRAWINGS
E-214	214	214	STAIR #2	11,12/A9.10	EXIT	SEE ELECTRICAL DRAWINGS
L-001	001		RECEIVING/ STORAGE	10/A9.10	LEVEL 0	
L-014	014		EXIT STAIR #2	10/A9.10	LEVEL 0	
L-111A	111		EXIT	10/A9.10	EXIT	
L-111	111		SERVICE	10/A9.10	LEVEL 1	
L-114	114		EXIT STAIR #2	10/A9.10	LEVEL 1- EXIT ROUTE	
L-214	214		EXIT STAIR #2	10/A9.10	LEVEL 2	
L-226	226		BRIDGE	10/A9.10	LEVEL 2	
L-105			ELEVATOR #2	13/A9.10	LEVEL 1	MOUNTED TO BOTH JAMBS AT ELEVATOR DOOR
L-205			ELEVATOR #2	13/A9.10	LEVEL 2	MOUNTED TO BOTH JAMBS AT ELEVATOR DOOR
L-020			ELEVATOR #1	13/A9.10	LEVEL 0	MOUNTED TO BOTH JAMBS AT ELEVATOR DOOR
L-120			ELEVATOR #1	13/A9.10	LEVEL 1	MOUNTED TO BOTH JAMBS AT ELEVATOR DOOR
L-220			ELEVATOR #1	13/A9.10	LEVEL 2	MOUNTED TO BOTH JAMBS AT ELEVATOR DOOR
L-010			ELEVATOR #3	13/A9.10	LEVEL 0	MOUNTED TO BOTH JAMBS AT ELEVATOR DOOR
L-110			ELEVATOR #3	13/A9.10	LEVEL 1	MOUNTED TO BOTH JAMBS AT ELEVATOR DOOR
O-101	101		MAIN RETAIL	8/A9.10	SEE DETAIL	MAXIMUM # OF OCCUPANTS = 212
O-102	102		CONVENIENCE	8/A9.10	SEE DETAIL	MAXIMUM # OF OCCUPANTS = 40
A-100A	100		MAIN ENTRY	14/A9.10	LEVEL 1	
A-100B	100		MAIN ENTRY	14/A9.10	LEVEL 1	

TYP. SIGNAGE NOTES

1. CHARACTER TYPE: CHARACTERS ON SIGNS SHALL BE RAISED 1/32 INCH MINIMUM AND SHALL BE SAN SERIF UPPERCASE CHARACTERS ACCOMPANIED BY CALIFORNIA GRADE 2 BRAILLE. SEE NOTE 5 BELOW.

2. CHARACTER SIZE: RAISED CHARACTERS SAHLL BE A MINIMUM OF 5/8 INCH AND A MAXIMUM OF 2" HIGH.

3. FINISH AND CONTRAST: CONTRAST BETWEEN CHARACTERS, SYMBOLS, AND THEIR BACKGROUND MUST BE 70% MINIMUM AND HAVE A NON-GLARE FINISH. 1117B.5.2.

4. PROPORTIONS: CHARACTERS ON SIGNS SHALL HAVE A WIDTH-TO-HEIGHT RATIO OF BETWEEN 3:5 AND 1:1 AND A STROKE WIDTH-TO-HEIGHT RATIO OF BETWEEN 1:5 AND 1:10. 1117B.5.3. ALL LETTERS MEASURED MUST BE UPPERCASE.

5. BRAILLE: CALIFORNIA GRADE 2 BRAILLE SHALL BE USED WHEREVER BRAILLE IS REQUIRED IN OTHER PORTIONS OF THESE STANDARDS. DOTS SHALL BE 1/10 INCH ON CENTER IN EACH CELL WITH 2/10 INCH SPACE BETWEEN CELLS, MEASURED FROM THE LAST COLUMN OF DOTS IN THE FISRT CELL TO THE FIRST COLUMN OF DOTS IN THE SECOND CELL. DOTS SHALL BE RAISED A MINIMUM OF 1/40 INCH ABOVE THE BACKGROUND. 1117B.5.6

6. FOR ALL SIGNAGE MOUNTING LOCATIONS AND HEIGHTS SEE DETAIL 1/A9.10.

7. FOR ALL EXIT SIGNAGE REFER TO ELECTRICAL DRAWINGS.

8. ALL TACTILE FLOOR LEVEL IDENTIFICATION SIGNS TO COMPLY WITH 1117B.5.1.

R – ROOM TITLE SIGNAGE
A – ACCESSIBILITY SIGNAGE
L – VERTICAL LEVEL SIGNAGE
E – EXIT SIGNAGE
S – SITE SIGNAGE
O – OCCUPANCY LOAD SIGNAGE

BSA Architects
A California Corporation
350 PACIFIC AVENUE
SAN FRANCISCO, CA 94111
415-781-1526

DIABLO VALLEY COLLEGE

DIABLO VALLEY COLLEGE NEW BOOKSTORE

321 GOLF CLUB RD.
PLEASANT HILL, CALIFORNIA

© 2003 BSA Architects
"All drawings and written material appearing herein constitute the original and unpublished work of the architect and the same may not be duplicated, used, or disclosed without the written consent of the architect."

DATE: 23 JULY, 2004

REVISIONS:

LICENSED ARCHITECT JOHN ASHWORTH No. C26747 REN. 1-31-05 STATE OF CALIFORNIA

BID SET

SHEET TITLE:

SIGNAGE PLAN & SCHEDULE

IDENTIFICATION STAMP
DIVISION OF THE STATE ARCHITECT
APPL 01 105925
AC LE FLS EO SS AY
DATE: 5-12-03 JUL 26 2004

BLDG. ID: 098
ID CODE: 312098-109.01-A

DRAWN BY: JH
CHECKED BY: JA
JOB NO: 0307

SHEET A9.9

8/15/03 A9-09.DWG

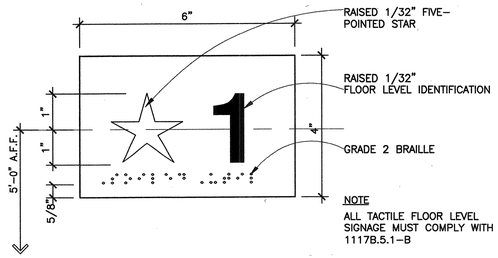

13 ELEVATOR JAMB FLOOR DESIGNATION
SCALE: 6"=1'-0"
SSTRNAM1

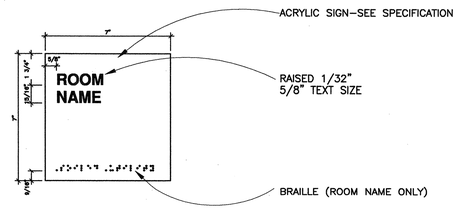

9 ROOM TITLE SIGN
SCALE: 3"=1'-0"
SROMNAME

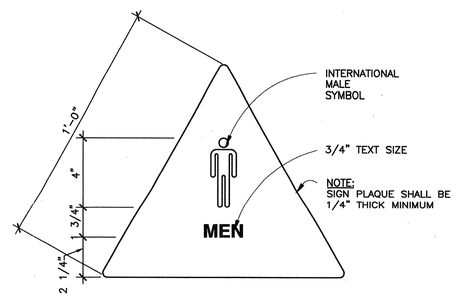

5 MEN'S RESTROOM SIGN
SCALE: 3"=1'-0"
MENSROOM

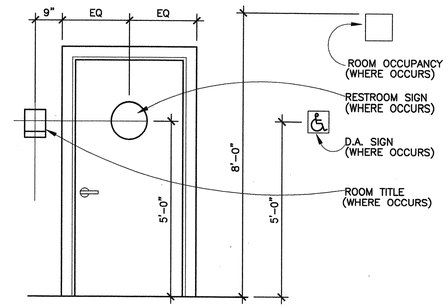

1 SIGNAGE LOCATION DETAIL
SCALE: 1/2"=1'-0"
SRRMDORA

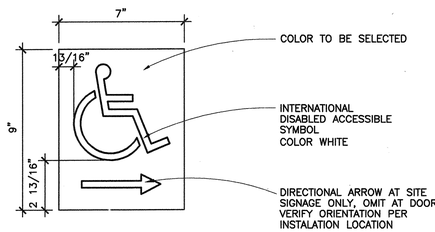

14 SYMBOL OF ACCESSIBILITY
SCALE: 3"=1'-0"
SINTSYMA

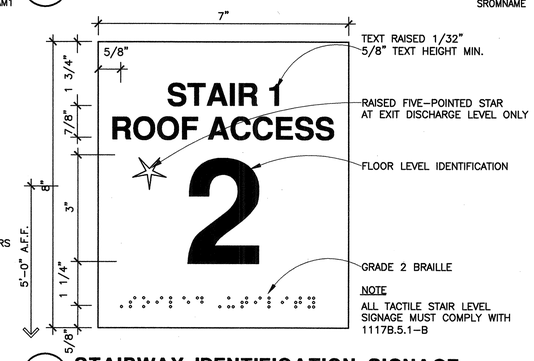

10 STAIRWAY IDENTIFICATION SIGNAGE
SCALE: 6"=1'-0"
SSTRNAM1

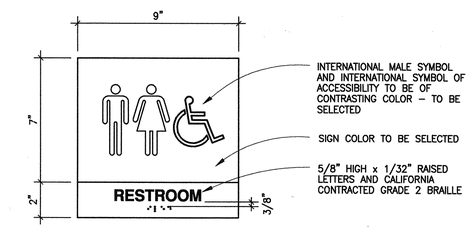

6 UNISEX RESTROOM PICTOGRAM
SCALE: 3"=1'-0"
SUNIPICT

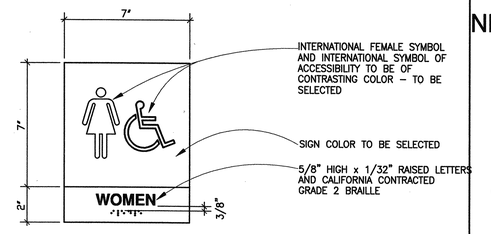

2 WOMEN PICTOGRAM
SCALE: 3"=1'-0"
SWOMNPIC

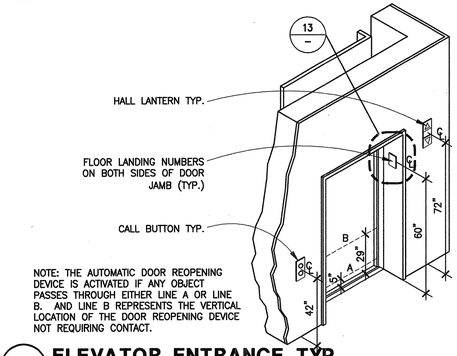

15 ELEVATOR ENTRANCE TYP.
SCALE: 1/4"=1'-0"
SELEVAXO

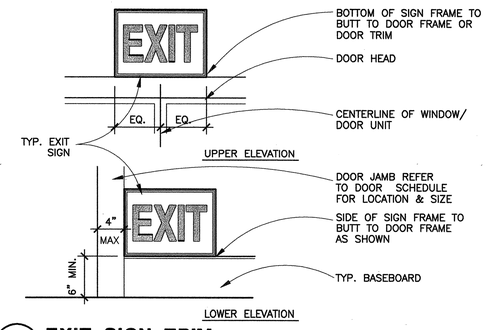

11 EXIT SIGN TRIM
SCALE: 1"=1'-0"
SEXTSGN

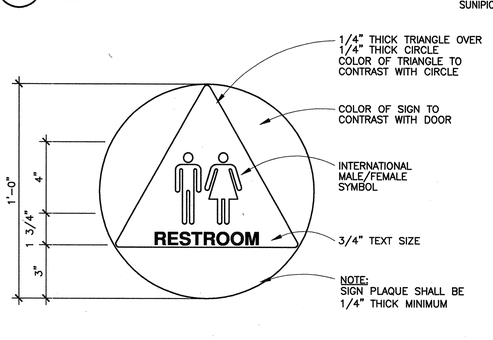

7 UNISEX RESTROOM SIGN
SCALE: 3"=1'-0"
SRSTRMA

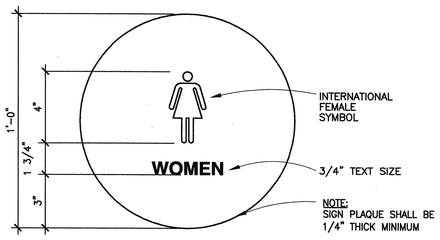

3 WOMEN'S RESTROOM SIGN
SCALE: 3"=1'-0"
WOMEN

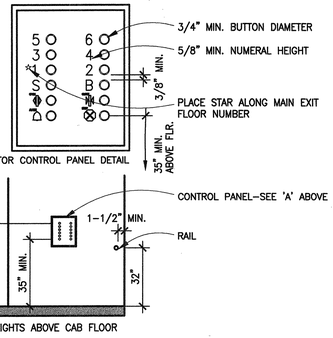

16 TYP. ELEV. CONTROL PANEL HEIGHTS
SCALE: N.T.S.
SELEVCNT

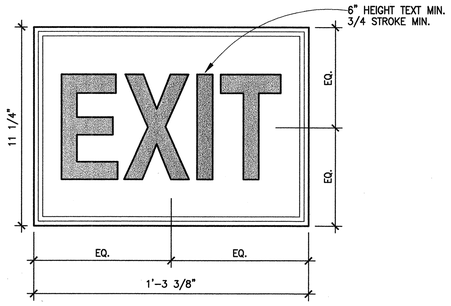

12 EXIT SIGN
SCALE: 3"=1'-0"
SEXTSGN1

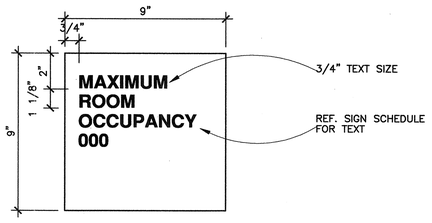

8 ROOM OCCUPANCY SIGN
SCALE: 3"=1'-0"
SROMOCCU

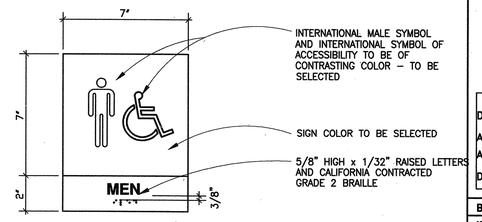

4 MEN PICTOGRAM
SCALE: 3"=1'-0"
SMENPICT

BSA Architects
A California Corporation
350 PACIFIC AVENUE
SAN FRANCISCO, CA 94111
415-781-1526

DIABLO VALLEY COLLEGE

DIABLO VALLEY COLLEGE NEW BOOKSTORE

321 GOLF CLUB RD.
PLEASANT HILL, CALIFORNIA

© 2003 BSA Architects
"All drawings and written material appearing herein constitute the original and unpublished work of the architect and the same may not be duplicated, used, or disclosed without the written consent of the architect."

DATE: 23 JULY, 2004

REVISIONS:

LICENSED ARCHITECT JOHN ASHWORTH No. C26747 REN. 1-31-05 STATE OF CALIFORNIA

BID SET

SHEET TITLE:
SIGNAGE DETAILS

IDENTIFICATION STAMP
DIVISION OF THE STATE ARCHITECT
105925
APPL 01
AC LE FLS EO SS AT
DATE: 5-12-04 JUL 26 2004

BLDG. ID: 098
ID CODE: 312098-109.01-A
DRAWN BY: JH
CHECKED BY: JA
JOB NO: 0307
SHEET A9.10

8/15/03 A9-10.DWG

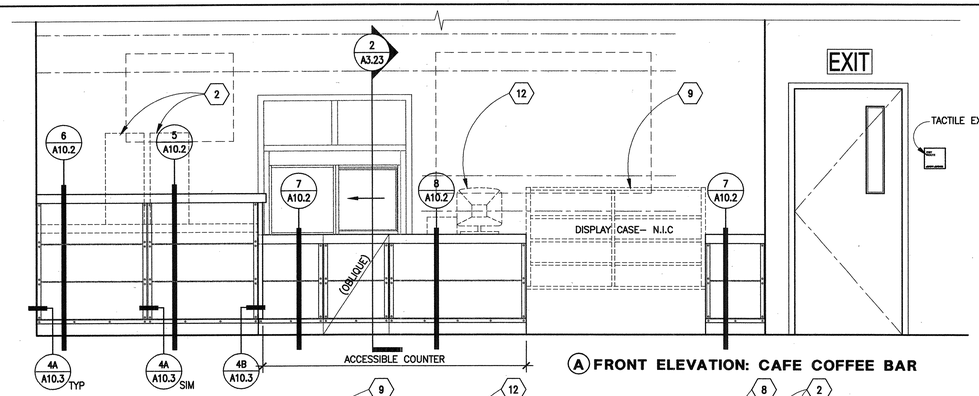

A FRONT ELEVATION: CAFE COFFEE BAR

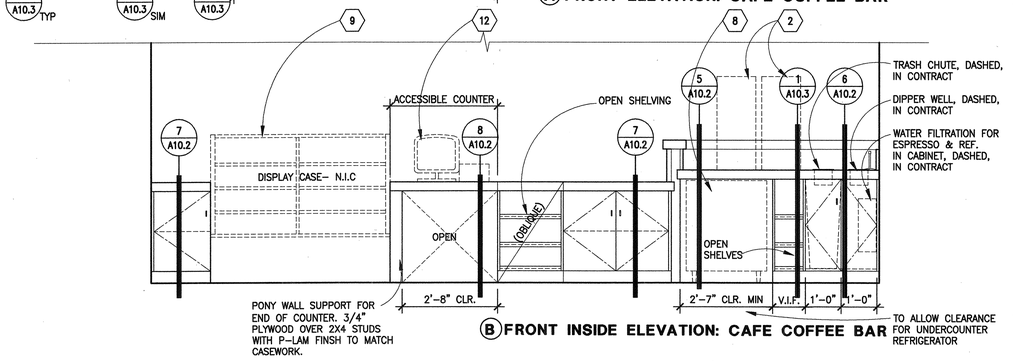

B FRONT INSIDE ELEVATION: CAFE COFFEE BAR

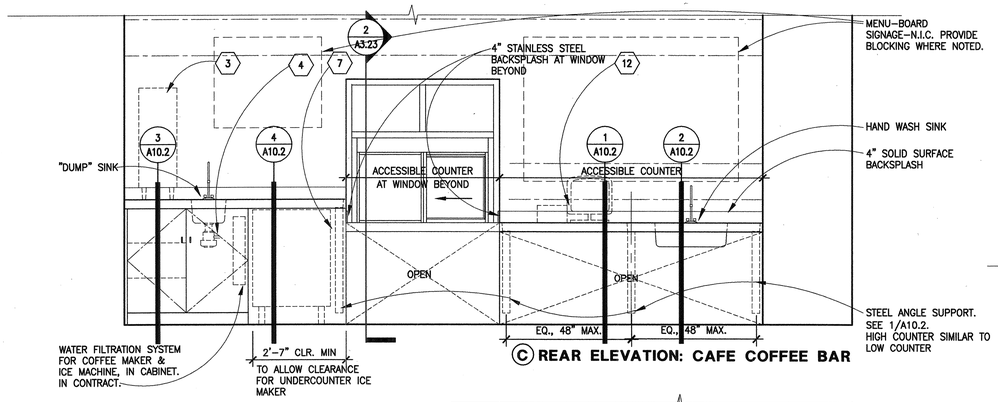

C REAR ELEVATION: CAFE COFFEE BAR

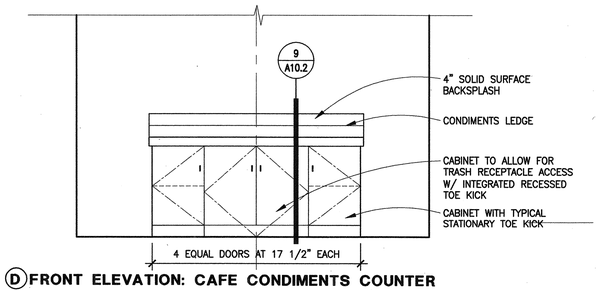

D FRONT ELEVATION: CAFE CONDIMENTS COUNTER

2 CAFE COFFEE BAR ELEVATIONS

SCALE: 1/2"=1'-0"

CAFEPLAN

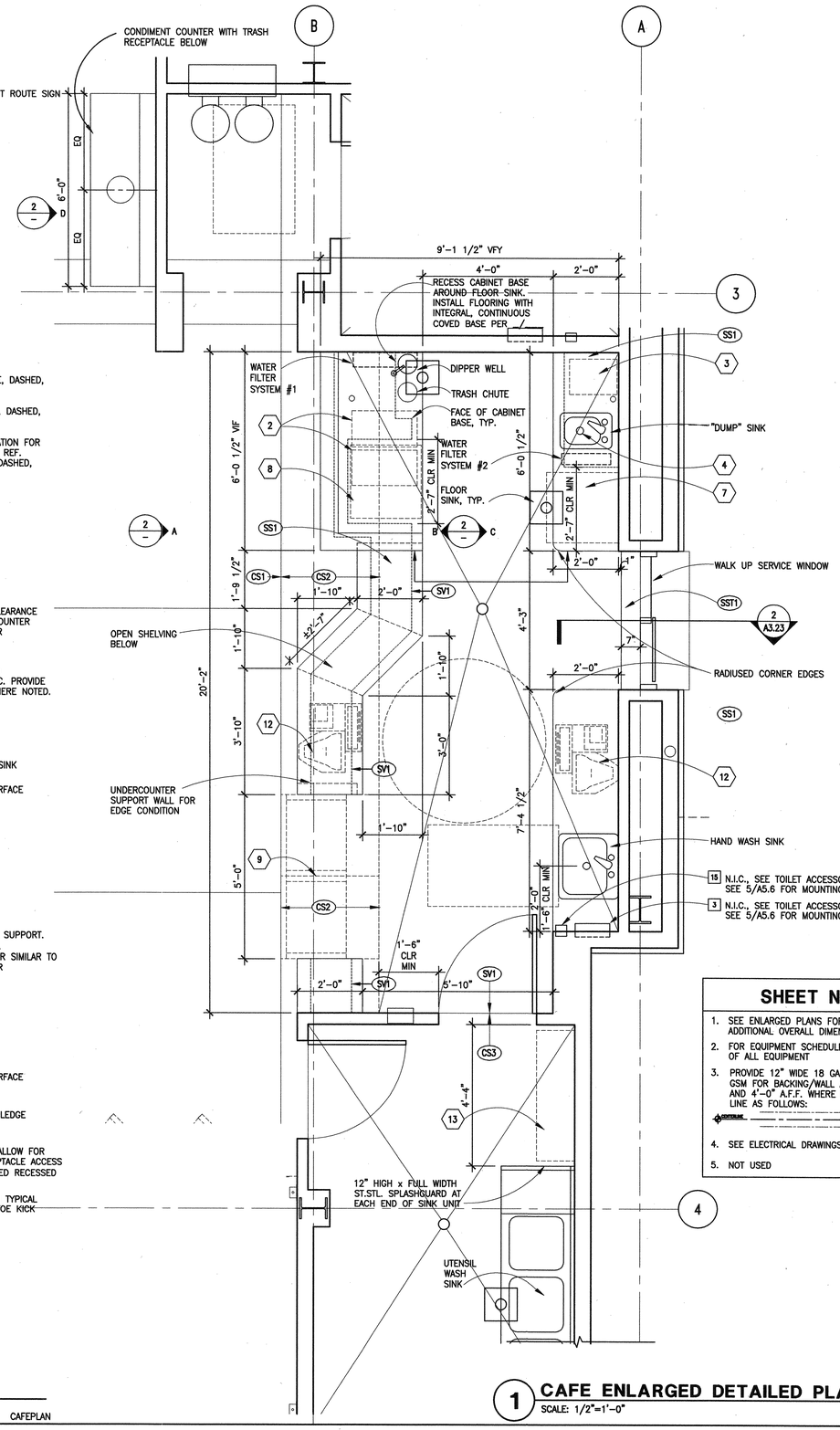

SHEET NOTES

1. SEE ENLARGED PLANS FOR EXTENTS OF PLAN AND ADDITIONAL OVERALL DIMENSIONS.
2. FOR EQUIPMENT SCHEDULE – SEE A11.5 FOR DESCRIPTION OF ALL EQUIPMENT
3. PROVIDE 12" WIDE 18 GA. FLAT STOCK GSM FOR BACKING/WALL ANCHORAGE AT 8'-0" A.F.F AND 4'-0" A.F.F. WHERE INDICATED BY DASHED LINE AS FOLLOWS:
   CENTERLINE
4. SEE ELECTRICAL DRAWINGS FOR LIGHTING FIXTURES
5. NOT USED

1 CAFE ENLARGED DETAILED PLAN

SCALE: 1/2"=1'-0"

CAFEPLAN

BSA Architects
A California Corporation
350 PACIFIC AVENUE
SAN FRANCISCO, CA 94111
415-781-1526

DIABLO VALLEY COLLEGE

DIABLO VALLEY COLLEGE NEW BOOKSTORE

321 GOLF CLUB RD.
PLEASANT HILL, CALIFORNIA

© 2003 BSA Architects
"All drawings and written material appearing herein constitute the original and unpublished work of the architect and the same may not be duplicated, used, or disclosed without the written consent of the architect."

DATE: 23 JULY, 2004

REVISIONS:

LICENSED ARCHITECT JOHN ASHWORTH No. C26747 REN. 1-31-05 STATE OF CALIFORNIA

BID SET

SHEET TITLE:

CASEWORK: CAFE PLAN & ELEVATIONS

IDENTIFICATION STAMP
DIVISION OF THE STATE ARCHITECT
105925
APPL 01
AC VE FLS ED SS HI
DATE: 5-12-04 JUL 26 2004

BLDG. ID: 098
ID CODE: 312098-109.01-A

DRAWN BY: JH
CHECKED BY: GL
JOB NO: 0307.10

SHEET A10.1

10/23/03 A10-01.DWG

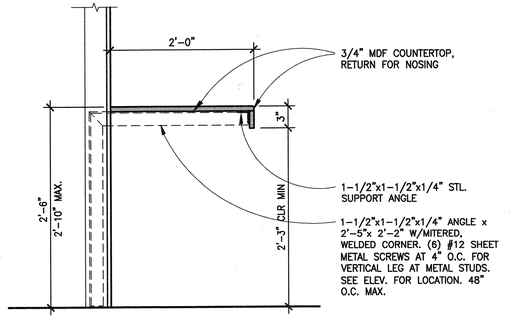

13 COUNTERTOP SECTION @ COUNTING

SCALE: 1"=1'-0"

MCTRTOP

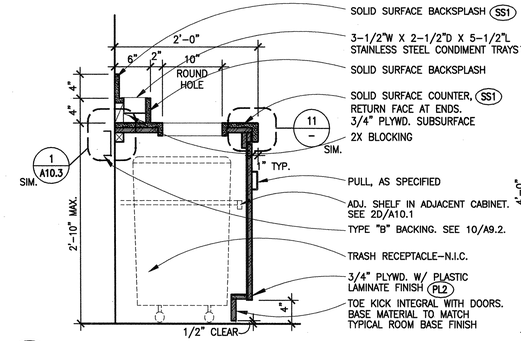

9 CONDIMENTS COUNTER

SCALE: 1"=1'-0"

CNTRTRSH

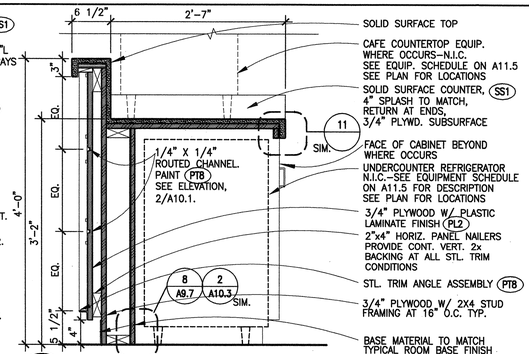

5 COUNTERTOP SECTION @ ESPRESSO

SCALE: 1"=1'-0"

CTRTLOP1

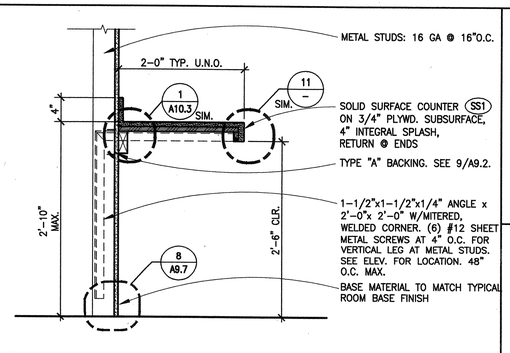

1 ACCESSIBLE COUNTERTOP SECTION 1

SCALE: 1"=1'-0"

CNTRACCS

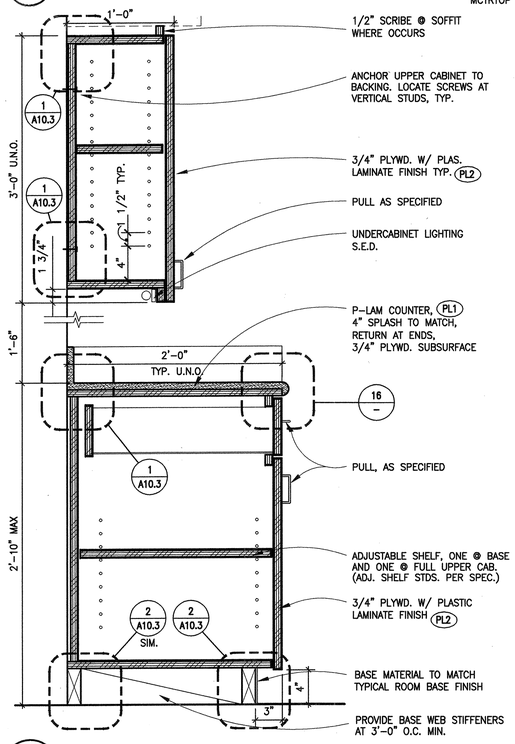

15 TYPICAL BASE & UPPER CABINETS

SCALE: 1 1/2"=1'-0"

MCABFULA

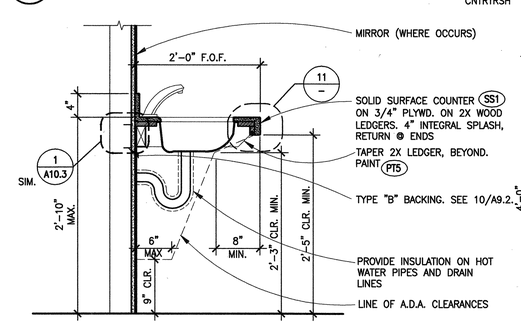

10 COUNTERTOP SECTION @ LAVATORY

SCALE: 1"=1'-0"

COUNTER

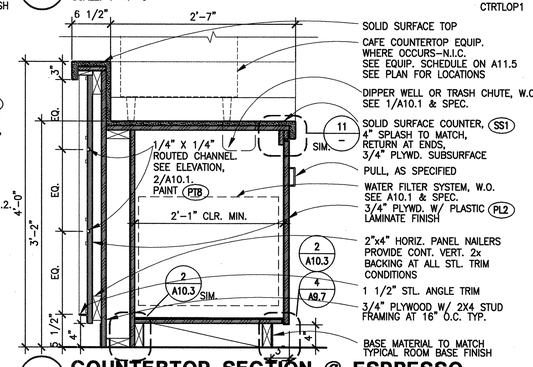

6 COUNTERTOP SECTION @ ESPRESSO

SCALE: 1"=1'-0"

CTRTLCB1

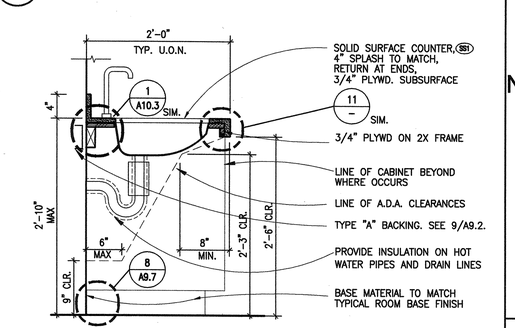

2 COUNTERTOP SECTION @ KITCHEN SINK

SCALE: 1"=1'-0"

CNTRSINK

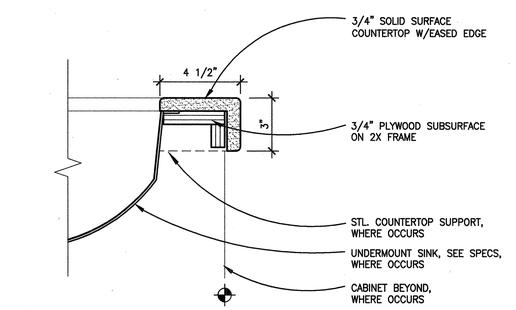

11 SOLID SURFACE COUNTERTOP NOSING

SCALE: 3"=1'-0"

ISSNOSE

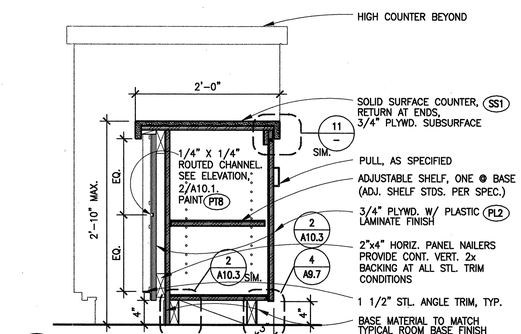

7 LOW COUNTERTOP SECTION

SCALE: 1"=1'-0"

CTRSTCB1

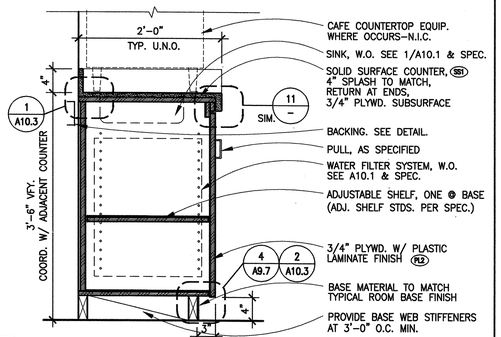

3 HIGH COUNTERTOP SECTION @ CABINETS

SCALE: 1"=1'-0"

CNTRTLCB

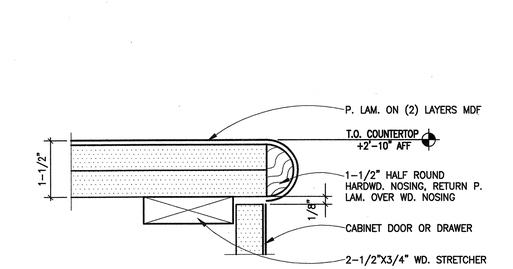

16 P-LAM COUNTER NOSING

SCALE: 6"=1'-0"

CABNOSE1

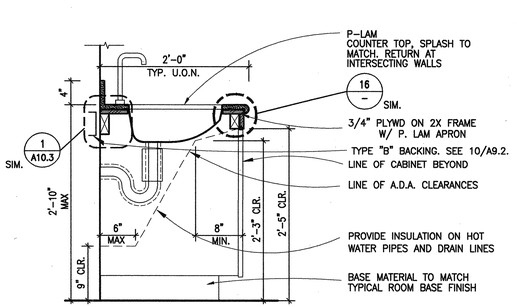

12 COUNTERTOP @ BREAKRM. KITCHEN SINK

SCALE: 1"=1'-0"

MCABFULB

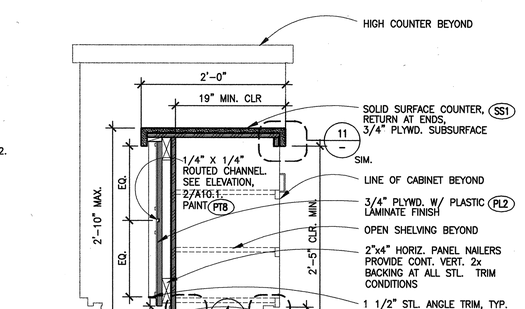

8 ACCESSIBLE COUNTERTOP SECTION 2

SCALE: 1"=1'-0"

CTRSTOP1

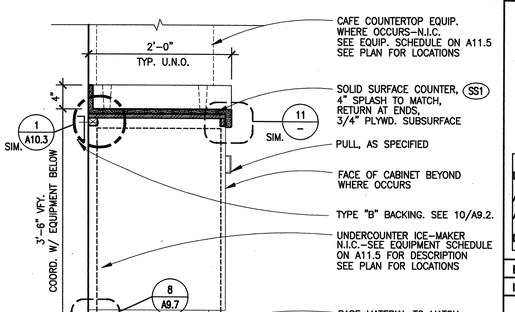

4 HIGH COUNTERTOP SECTION OPEN

SCALE: 1"=1'-0"

CNTRTLOP

10/23/03 A10-02.DWG

BSA Architects
A California Corporation
350 PACIFIC AVENUE
SAN FRANCISCO, CA 94111
415-781-1526

DIABLO VALLEY COLLEGE

DIABLO VALLEY COLLEGE NEW BOOKSTORE

321 GOLF CLUB RD.
PLEASANT HILL, CALIFORNIA

© 2003 BSA Architects
"All drawings and written material appearing herein constitute the original and unpublished work of the architect and the same may not be duplicated, used, or disclosed without the written consent of the architect."

DATE: 23 JULY, 2004

REVISIONS:

LICENSED ARCHITECT JOHN ASHWORTH No. C26747 REN. 1-31-05 STATE OF CALIFORNIA

BID SET

SHEET TITLE:

CASEWORK DETAILS

IDENTIFICATION STAMP
DIVISION OF THE STATE ARCHITECT
105925
APPL 01
AC LE FLS ED SS AT
DATE: 5-12-04 JUL 26 2004

BLDG. ID:	098
ID CODE:	312098-109.01-A
DRAWN BY: JH	SHEET
CHECKED BY: GL	A10.2
JOB NO: 0307.10	

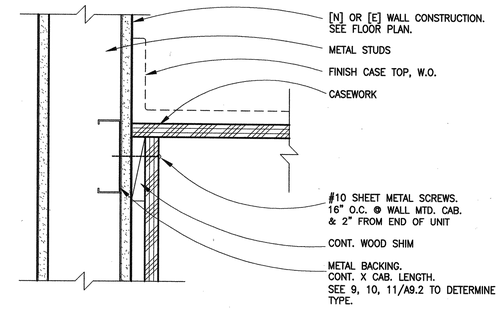

1 TYPICAL WALL CABINET ANCHORAGE

SCALE: 3"=1'-0"

TYPCABAN

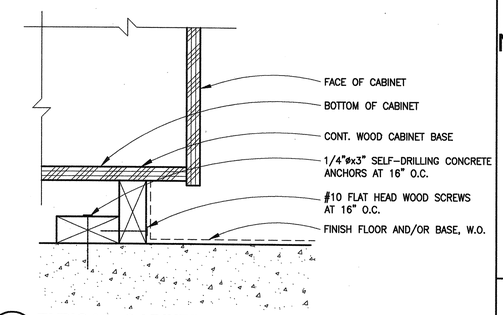

2 TYPICAL CABINET BASE ANCHORAGE

SCALE: 3"=1'-0"

TYPCABBS

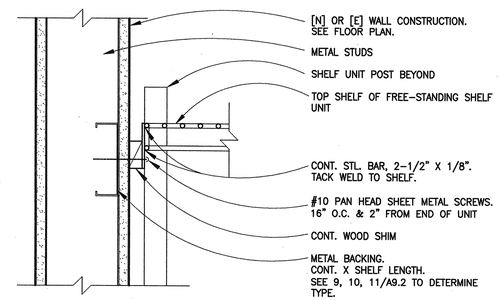

3 TYPICAL STORAGE SHELF ANCHORAGE

SCALE: 3"=1'-0"

SHELFANC

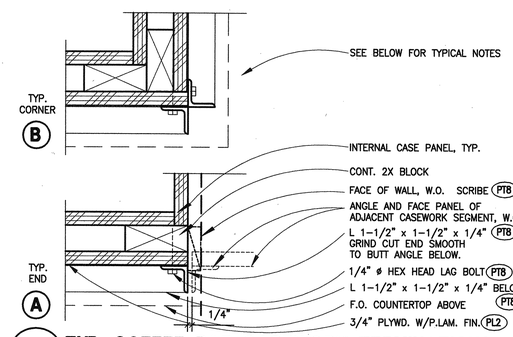

4 TYP. COFFEE BAR CASEWORK TERMINATIONS

SCALE: 3"=1'-0"

TYPCTRIM

BSA
Architects
A California Corporation
350 PACIFIC AVENUE
SAN FRANCISCO, CA 94111
415-781-1526

DIABLO VALLEY COLLEGE

DIABLO VALLEY COLLEGE NEW BOOKSTORE

321 GOLF CLUB RD.
PLEASANT HILL, CALIFORNIA

© 2003 BSA Architects
"All drawings and written material appearing herein constitute the original and unpublished work of the architect and the same may not be duplicated, used, or disclosed without the written consent of the architect."

DATE: 23 JULY, 2004

REVISIONS:

LICENSED ARCHITECT JOHN ASHWORTH NO. C26747 REN. 1-31-05 STATE OF CALIFORNIA

BID SET

SHEET TITLE:

CASEWORK DETAILS

IDENTIFICATION STAMP
DIVISION OF THE STATE ARCHITECT
105925
APPL 01
AC GE FLS EO SS AT
DATE: 5-12-04 EKC

BLDG. ID: 098
ID CODE: 312098-109.01-A

DRAWN BY: GP
CHECKED BY: GL
JOB NO: 0307.10

SHEET A10.3

10/23/03 A10-02.DWG

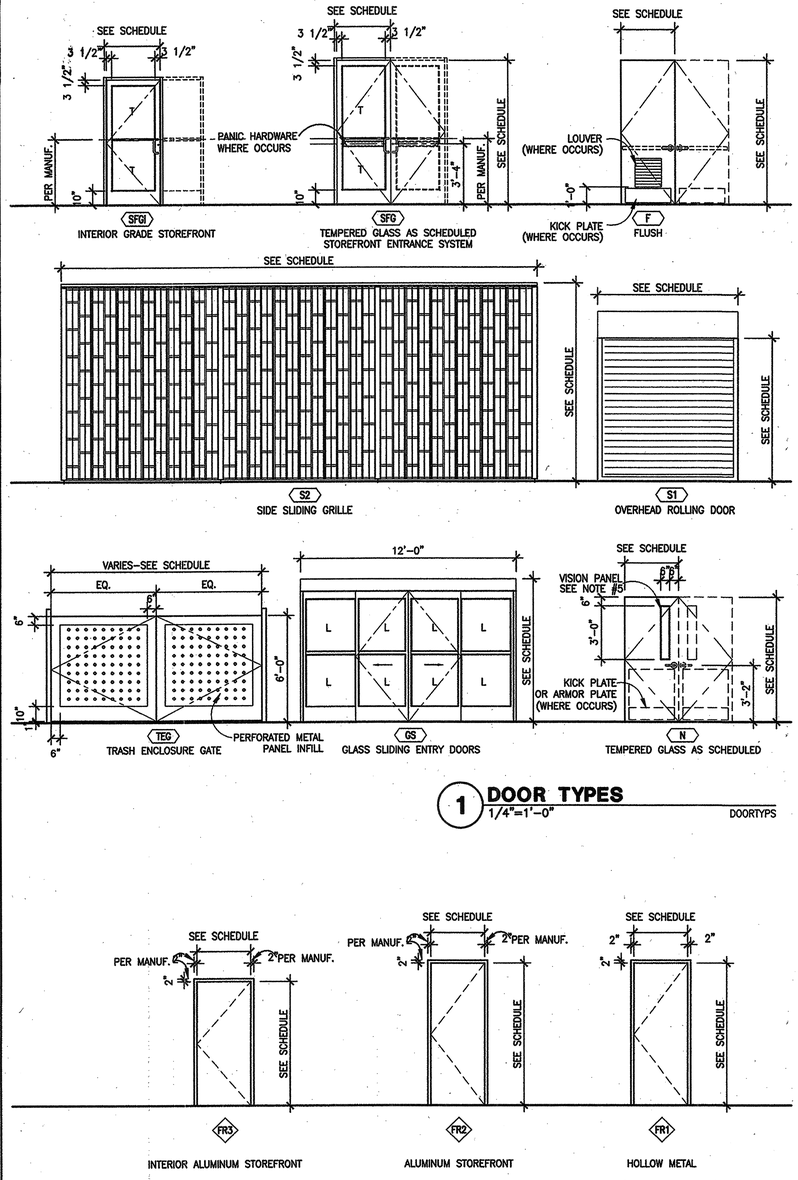

1 DOOR TYPES
1/4"=1'-0"
DOORTYPS

2 FRAME TYPES
1/4"=1'-0"
DOORTYPS

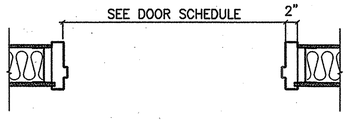

3 DOOR OPENING DETAIL
1"=1'-0"
DOOROPEN

DOOR SCHEDULE

DOOR NUMBER	ROOM NAME	SIZE W x H x T	DOOR TYPE	DOOR MTRL.	DOOR FIN.	DOOR GLAZ.	HDWR. GROUP	FIRE RATING	FRAME TYP.	FRAME MTRL.	FRAME FIN.	DETAILS HEAD	DETAILS JAMB	DETAILS JAMB DTL. SIM. U.O.N.	DETAILS SILL	REMARKS
001A	RECEIVING/STORAGE	3'-0" x 7'-0" x 1-3/4"	F	HM	PT7	–	2		FR1	HM	PT7	12/A8.4	12/A8.4	–	16/A8.5	
001B	RECEIVING/STORAGE	8'-0"" x 7'-6" x –	S1	–	PT7	–	MFR		–	–	PT7	7/A8.3	8/A8.3	–	8/A8.3	OVERHEAD ROLLING DOOR
003	ELEVATOR MECH.	3'-0" x 7'-0" x 1-3/4"	F	HM	PT7	–	5		FR1	HM	PT7	1/A9.4	1/A9.4	–	–	DOOR LOUVER (PT7)–ONE SQUARE FOOT NET FREE AREA
004	ELECTRICAL	4'-0" x 7'-0" x 1-3/4"	F	HM	PT7	–	5	60 MIN	FR1	HM	PT7	1/A9.4	1/A9.4	–	–	
005	SECURE STORAGE	3'-0" x 7'-0" x –	–	–	PT7	–	15		–	–	–	–	–	–	–	BY GATE PARTITION MANUFACTURER, CYLINDER LOCK TO BE CORBIN
007	ELEVATOR MECHANICAL	3'-0" x 7'-0" x 1-3/4"	F	HM	PT7	–			FR1	HM	PT7	9/A9.4	9/A9.4	–	–	DOOR LOUVER(PT7)–ONE SQUARE FOOT NET FREE AREA
008	RECEIVING OFFICE	3'-0" x 7'-0" x 1-3/4"	F	HM	PT7	–	6		FR1	HM	PT7	9/A9.4	9/A9.4	–	–	
009	BOILER ROOM	3'-0" x 7'-0" x 1-3/4"	F	HM	PT7	–	5	60 MIN	FR1	HM	PT7	9/A9.4	9/A9.4	–	–	
011A	LOADING DOCK TRASH	PAIR 6'-0" x 6'-0" x –	–	MTL.	PT7	–	17		–	–	–	–	3/A1.2	–	–	TRASH ENCLOSURE GATE, CANE BOLTS, SEE DRAWINGS 0
011B	LOADING DOCK TRASH	PAIR 4'-0" x 6'-0" x –	–	MTL.	PT7	–	17		–	–	–	–	3/A1.2	–	–	TRASH ENCLOSURE GATE, CANE BOLTS, SEE DRAWINGS
011C	LOADING DOCK TRASH	PAIR 6'-0" x 6'-0" x –	–	MTL.	PT7	–	17	0	–	–	–	–	3/A1.2	–	–	TRASH ENCLOSURE GATE, CANE BOLTS, SEE DRAWINGS
014	STAIR #2	3'-0" x 7'-0" x 1-3/4"	F	HM	PT7	–	3	60 MIN	FR1	HM	PT7	1/A9.4	1/A9.4	–	–	
020	ELEVATOR #1	4'-0" x 7'-3" x 3/4"	F	HM	PT7	–	41	20 MIN	FR1	HM	PT7	6/A9.8	3/A9.8	–	–	SMOKE DOOR W/ MAGNETIC HOLD OPEN
100A	MAIN ENTRY	PAIR 3'-0" x 8'-0" x –	GS	ALUM.	–	GL-1-L	MFR		–	–	–	11/A8.7	15/A8.7	–	12/A8.7	SLIDING DOORS WITH DIRECTIONAL MOTION SENSOR AT HEAD FINISH TO MATCH "FF1". SECURITY CONTROL HARDWARE
100B	MAIN ENTRY	PAIR 3'-0" x 8'-0" x –	GS	ALUM.	–	GL-1-L	MFR		–	–	–	11/A8.7	15/A8.7	–	12/A8.7	SLIDING DOORS WITH DIRECTIONAL MOTION SENSOR AT HEAD FINISH TO MATCH "FF1". SECURITY CONTROL HARDWARE 0
100C	MAIN ENTRY	29'-0" x 8'-0" x –	S2	–	–	–	MFR		–	–	–	13/A9.4	14/A9.4	–	15/A9.4	~~SLIDING GRILLE, CLEAR ANODIZED ALUMINUM FINISH TOP & BOTTOM LOCKING END~~
101	MAIN RETAIL	PAIR 3'-0" x 8'-0" x 1-3/4"	SFG	ALUM.	FF2	GL-1-T	31		FR2	ALUM.	FF2	9/A8.5	10/A8.5	–	12/A8.5	
102	CONVENIENCE	3'-0" x 7'-0" x 1-3/4"	N	HM	PT4	GL-4-T	8		FR1	HM	PT5	1/A9.4	1/A9.4	–	–	
103	ELEVATOR MECH.	3'-0" x 7'-0" x 1-3/4"	F	HM	PT10	–	5		FR1	HM	PT10	1/A9.4	1/A9.4	–	–	
104	JANITOR	3'-0" x 7'-0" x 1-3/4"	F	HM	PT10	–	5		FR1	HM	PT10	1/A9.4	1/A9.4	–	–	
106	STAIR #1	3'-0" x 8'-0" x 1-3/4"	SFG	ALUM.	FF2	GL-4-T	32		FR2	ALUM.	FF2	9/A8.5	10/A8.5	11/A8.5	12/A8.5	
107	RESTROOM	3'-0" x 7'-0" x 1-3/4"	F	HM	PT4	–	9		FR1	HM	PT5	1/A9.4	1/A9.4	–	–	
108	CAFE	3'-0" x 7'-0" x 1-3/4"	N	HM	PT4	GL-4-T	8		FR1	HM	PT5	1/A9.4	1/A9.4	–	1/A9.5	
111A	SERVICE	3'-0" x 8'-0" x 1-3/4"	F	HM	PT2/PT4	–	1A 0		FR1	HM	PT2/PT5	14/A8.5	15/A8.5	–	16/A8.5	SECURITY ACCESS KEYPAD 0
111B	SERVICE	PAIR 3'-0" x 7'-0" x 1-3/4"	N	HM	PT4	GL-4-T	16		FR1	HM	PT5	1/A9.4	1/A9.4	–	–	
112	COUNTING	3'-0" x 7'-0" x 1-3/4"	F	HM	PT4	–	14		FR1	HM	PT5	1/A9.4	1/A9.4	–	7/A9.5	SECURITY ACCESS KEYPAD
113	BUYBACK	PAIR 3'-0" x 7'-0" x 1-3/4"	F	HM	PT4	–	13		FR1	HM	PT5	1/A9.4	1/A9.4	–	7/A9.5	
114A	STAIR #2	3'-0" x 7'-0" x 1-3/4"	F	HM	PT4	–	4	60 MIN	FR1	HM	PT5	1/A9.4	1/A9.4	–	–	
114B	STAIR #2	3'-0" x 3'-0" x –	–	–	PT7	–	18 0		–	–	–	–	–	–	–	LOW GATE TO DIRECT EXITING, SELF CLOSING HINGE 0
114C	STAIR #2	3'-0" x 7'-0" x 1-3/4"	F	HM	PT2/PT4	–	1		FR1	HM	PT2/PT5	14/A8.5	15/A8.5	–	16/A8.5	
115	ELECTRICAL	3'-0" x 7'-0" x 1-3/4"	F	HM	PT4	–	5		FR1	HM	PT5	1/A9.4	1/A9.4	–	7/A9.5	
117	SUPERVISOR'S OFFICE	3'-0" x 7'-0" x 1-3/4"	F	HM	PT4	–	6		FR1	HM	PT5	1/A9.4	1/A9.4	–	–	
118	CUSTOMER CARE	3'-0" x 7'-0" x 1-3/4"	F	HM	PT4	–	6		FR1	HM	PT5	1/A9.4	1/A9.4	–	2/A9.5	
119	SECURITY OFFICE	3'-0" x 7'-0" x 1-3/4"	N	HM	PT4	GL-4-T	14		FR1	HM	PT5	1/A9.4	1/A9.4	–	2/A9.5	SECURITY ACCESS KEYPAD
120	ELEVATOR #1	4'-0" x 7'-3" x 1-3/4"	F	HM	PT4	–	41	20 MIN	FR1	HM	PT5	6/A9.8	5/A9.8	–	–	SMOKE DOOR W/ MAGNETIC HOLD OPEN
203	SERVER	3'-0" x 7'-0" x 1-3/4"	F	HM	PT4	–	14		FR1	HM	PT5	1/A9.4	1/A9.4	–	7/A9.5	SECURITY ACCESS KEYPAD
204	OPEN OFFICE	3'-0" x 7'-0" x 1-3/4"	SFGI	ALUM.	FF2	GL-4-T	33		FR2	ALUM.	FF2	2/A9.4	3/A9.4	4&5/A9.4	–	
206	STORE MANAGER	3'-0" x 7'-0" x 1-3/4"	F	HM	PT4	–	6		FR1	HM	PT5	1/A9.4	1/A9.4	–	–	
207	STORAGE	3'-0" x 7'-0" x 1-3/4"	F	HM	PT10	–	5		FR1	HM	PT10	1/A9.4	1/A9.4	–	7/A9.5	
210A	MEETING/BREAK RM.	3'-0" x 7'-0" x 1-3/4"	F	HM	PT4	–	13		FR1	HM	PT5	1/A9.4	1/A9.4	–	–	
210B	MEETING/BREAK RM.	3'-0" x 7'-0" x 1-3/4"	F	HM	PT4	–	6		FR1	HM	PT5	1/A9.4	1/A9.4	–	–	
212	OFFICE ASSISTANT	3'-0" x 7'-0" x 1-3/4"	SFGI	ALUM.	FF2	GL-4-T	33		FR2	ALUM.	FF2	2/A9.4	3/A9.4	4/A9.4	–	
214	STAIR #2	3'-0" x 7'-0" x 1-3/4"	F	HM	PT10	–	3	60 MIN	FR1	HM	PT10	1/A9.4	1/A9.4	–	2/A9.5	
218	WOMENS RESTROOM	3'-0" x 7'-0" x 1-3/4"	F	HM	PT9	–	12		FR1	HM	PT9	1/A9.4	1/A9.4	–	2/A9.5	
220	ELEVATOR #1	4'-0" x 7'-0" x 1-3/4"	F	HM	PT9	–	41	20 MIN	FR1	HM	PT9	6/A9.8	5/A9.8	–	–	SMOKE DOOR W/ MAGNETIC HOLD OPEN
222	MENS RESTROOM	3'-0" x 7'-0" x 1-3/4"	F	HM	PT9	–	12		FR1	HM	PT9	1/A9.4	1/A9.4	–	2/A9.5	
224	JANITOR	3'-0" x 7'-0" x 1-3/4"	F	HM	PT4	–	5		FR1	HM	PT5	1/A9.4	1/A9.4	–	–	

GENERAL NOTES

1. FOR GLAZING TYPES, SEE GLASS TYPES AT RIGHT
2. MAXIMUM DOOR OPENING EFFORT: 8.5 lbs. AT EXTERIOR, 15 lbs. @ INTERIOR.
3. ALL DOORS ARE EQUIPPED WITH SINGLE EFFORT, NON-GRASP LEVER HARDWARE.
4. ALL EXTERIOR DOORS TO BE FLASHED PER DETAIL 1/A8.5 SIMILAR
5. DIMENSION OF 6" WIDTH AT VISION PANEL IN DOOR TYPE "N", IS TO EXTENT OF GLAZING.
6. PROVIDE TEMPERED AND LAMINATED GLASS WHERE INDICATED AND SCHEDULED.
7. DOOR FINISHES: PTX/PTX.
   - PTX (first) – DENOTES INTERIOR FINISH
   - PTX (second) – DENOTES EXTERIOR FINISH

GLASS TYPES

1. REFER TO SPECIFICATION SECTION 08800 FOR FOR MORE INFORMATION ON GLAZING TYPES
2. GLASS TYPES & ABBREVIATIONS :
   - GL-1 INSLUATED CLEAR GLAZING
     OUTER LAYER: CLEAR GLASS
     INNER LAYER: CLEAR GLASS
   - GL-2 INSULATED LOW-E GLAZING
     OUTER LAYER: CLEAR GLASS
     INNER LAYER: LOW-E SUNGUARD AG-43
   - GL-3 INSULATED SPANDREL GLAZING
     1/4" CLEAR GLASS
     WITH INSULATION
   - GL-4 1/4" CLEAR GLASS
   - GL-5 1/4" TRANSPARENT MIRROR GLASS (ONE WAY)
   - T TEMPERED GLASS
   - L LAMINATED GLASS

ABBREVIATIONS

ADO	AUTOMATIC DOOR OPENER	SG	SMOKE GASKET	SCWD	SOLID CORE WOOD DOOR	SC	SOLID CORE
AG	ACOUSTICAL GASKETS	ALUM.	ALUMINUM	SS	STAINLESS STEEL	WF	WOOD FACING
EL	ELECTRIC LATCH	ACW	ALUMINUM CLAD WOOD FRAME	SF	STOREFRONT SYSTEM	SD/H/C	SMOKE DETECTOR/HOLDER/CLOSER
HO	HOLD OPEN DEVICE	HM	HOLLOW METAL	ST	STEEL	MC	MINERAL CORE
DB	DOOR BOTTOM	HC	HOLLOW CORE	STL	GALVANIZED STEEL	INS	INSULATED
(NR)	NOT REQUIRED	GL	GLASS	PT-	PAINT COLOR – SEE FIN. SCHED.	CLR	CLEAR FINISH
PH	PANIC HARDWARE	MTL.	METAL	SW	STAINED WOOD	WD.	WOOD
PP	PUSH / PULL						

BSA Architects
A California Corporation
350 PACIFIC AVENUE
SAN FRANCISCO, CA 94111
415-781-1526

DIABLO VALLEY COLLEGE

DIABLO VALLEY COLLEGE NEW BOOKSTORE

321 GOLF CLUB RD.
PLEASANT HILL, CALIFORNIA

© 2003 BSA Architects
"All drawings and written material appearing herein constitute the original and unpublished work of the architect and the same may not be duplicated, used, or disclosed without the written consent of the architect."

DATE: 23 JULY, 2004

REVISIONS:
0 REVISIONS– 23 JULY, 2004

LICENSED ARCHITECT JOHN ASHWORTH No. C26747 REN. 1-31-05 STATE OF CALIFORNIA

BID SET

SHEET TITLE:
DOOR TYPES & SCHEDULE

IDENTIFICATION STAMP
DIVISION OF THE STATE ARCHITECT
105925
APPL 01
AC VE FLS ED SS A1
DATE: 5-12-04

BLDG. ID: 098
ID CODE: 312098-109.01-A

DRAWN BY: JH
CHECKED BY: JA
JOB NO: 0307

SHEET A11.1

8/15/03 A11-01.DWG

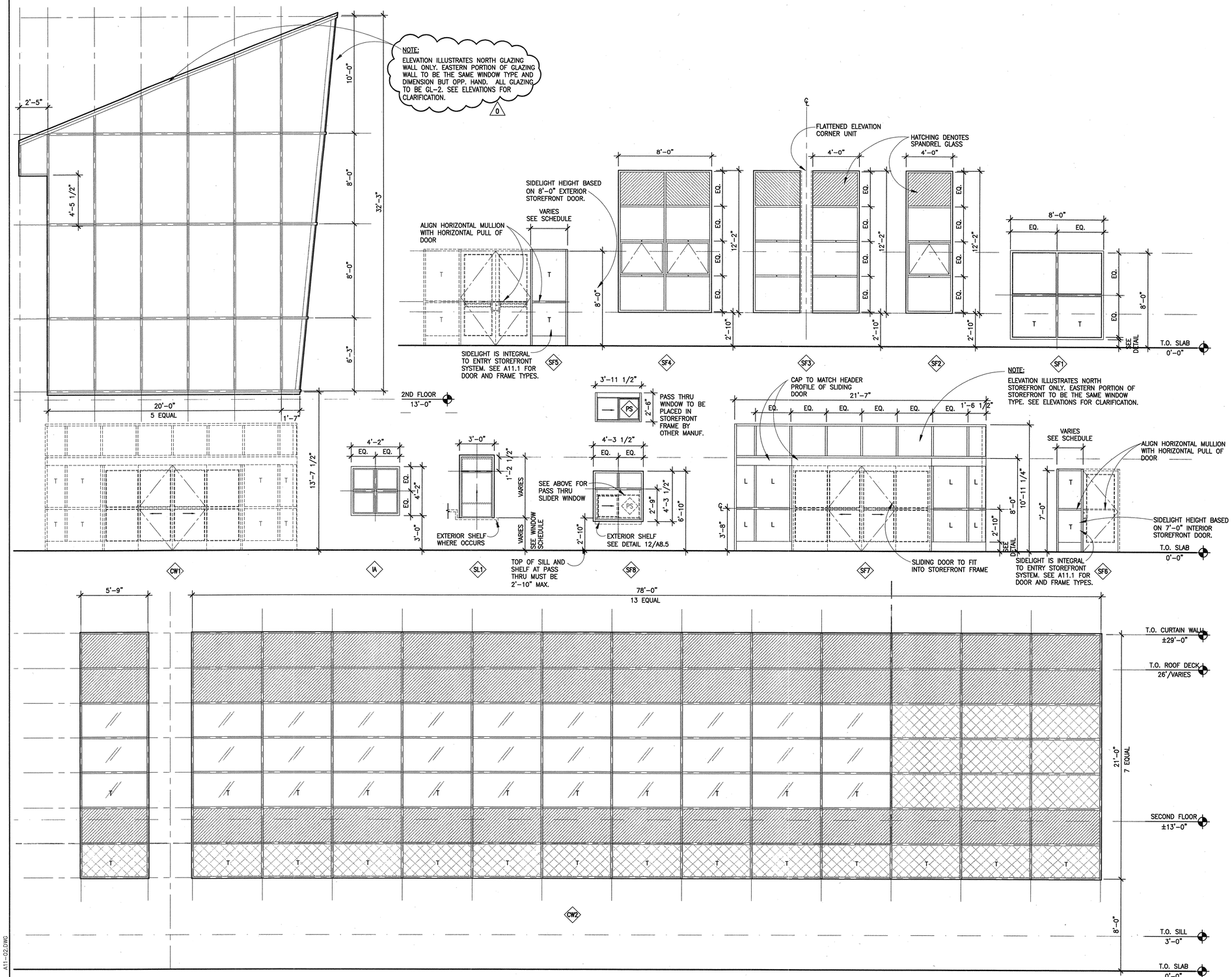

1 WINDOW TYPES

1/4"=1'-0"

WINTYPS

SHEET NOTES

1. SEE DOOR, WINDOW AND LOUVER SCHEDULES FOR SIZE OF EACH UNIT
2. ALL WINDOWS & LOUVERS SHALL BE FLASHED PER DETAIL: 1/A8.5
3. SEE SPECIFICATIONS FOR HARDWARE GROUPS
4. SEE MATERIALS AND FINISHES SCHEDULE FOR DESCRIPTIONS OF REFERENCES
5. ALL SILL HEIGHTS ARE GIVEN FROM TOP OF FINISHED FLOOR TYP. U.O.N.
6. FIELD VERIFY ALL ROUGH OPENING DIMENSIONS BEFORE ORDERING WINDOWS & LOUVERS
7. SEE WINDOW TYPES FOR EXTENT OF TEMPERED AND LAMINATED GLAZING

GLASS TYPES :

1. REFER TO SPECIFICATION SECTION 08800 FOR FOR MORE INFORMATION ON GLAZING TYPES
2. GLASS TYPES & ABBREVIATIONS :
   - GL-1 INSULATED CLEAR GLAZING OUTER LAYER: SUNGUARD CLEAR INNER LAYER: SUNGUARD CLEAR
   - GL-2 INSULATED LOW-E GLAZING OUTER LAYER: SUNGUARD CLEAR INNER LAYER: LOW-E SUNGUARD AG-43
   - GL-3 INSULATED SPANDREL GLAZING 1/4" CLEAR GLASS WITH INSULATION
   - GL-4 1/4" CLEAR GLASS
   - GL-5 1/4" TRANSPARENT MIRROR GLASS (ONE WAY)
   - T TEMPERED GLASS
   - L LAMINATED GLASS
3. PROVIDE TEMPERED GLASS WHERE INDICATED AND SCHEDULED. WHERE TEMPERED GLASS IS USED IN AN INSULATED UNIT BOTH LAYERS ARE TEMPERED
4. PROVIDE LAMINATED GLASS WHERE INDICATED AND SCHEDULED. WHERE LAMINATED GLASS IS USED IN AN INSULATED UNIT BOTH LAYERS ARE LAMINATED

LEGEND

- SF ALUMINUM STOREFRONT WINDOW
- SL SLIDING ALUMINUM FRAME STOREFRONT WINDOW
- CW OUTSIDE GLAZED CAPTURED CURTAIN WALL SYSTEM
- IA INTERIOR ALUMINUM FRAME WINDOW
- L ALUMINUM FRAME LOUVER

HATCHING LEGEND(CW2)

NOTES
1. THIS GLASS HATCHING LEGEND PERTAINS ONLY TO WINDOW TYPE CW2. SEE WINDOW SCHEDULE FOR ALL OTHER GLAZING REFERENCES.
2. LOCATIONS OF TEMPERED GLASS AS INDICATED.

- GL-4: 1/4" CLEAR GLASS SINGLE GLAZED FOR EXTERIOR APPLICATION
- GL-3: SPANDREL GLASS SINGLE GLAZED WITH BACKPAN-INSULATION ONLY AT INTERIOR CONDITIONS
- GL-1: INSULATED GLASS OUTER LAYER: CLEAR INNER LAYER: CLEAR

BSA Architects
A California Corporation
350 PACIFIC AVENUE
SAN FRANCISCO, CA 94111
415-781-1526

DIABLO VALLEY COLLEGE

DIABLO VALLEY COLLEGE NEW BOOKSTORE

321 GOLF CLUB RD.
PLEASANT HILL, CALIFORNIA

© 2003 BSA Architects
"All drawings and written material appearing herein constitute the original and unpublished work of the architect and the same may not be duplicated, used, or disclosed without the written consent of the architect."

DATE: 23 JULY, 2004

REVISIONS:
0 REVISIONS- 23 JULY, 2004

LICENSED ARCHITECT JOHN ASHWORTH No. C26747 REN. 1-31-05 STATE OF CALIFORNIA

BID SET

SHEET TITLE:

WINDOW TYPES

IDENTIFICATION STAMP
DIVISION OF THE STATE ARCHITECT
105925
APPL 01
AC LE FLS EO SS A1
DATE: 5-12-04 JUL 26 2004

BLDG. ID: 098
ID CODE: 312098-109.01-A

DRAWN BY: JH
CHECKED BY: JA
JOB NO: 0307

SHEET A11.2

8/15/03 A11-02.DWG

WINDOW SCHEDULE

WINDOW NUMBER	SIZE WDTH.	SIZE HT.	WINDOW TYPE	WINDOW MATR.	WINDOW GLAZ.	WINDOW FIN.	WINDOW HEAD HT.	DETAIL HEAD	DETAIL JAMB	DETAIL JAMB	DETAIL SILL	REMARKS
008	3'-0"	4'-0"	SL1	ALUM.	GL-1	FF2	7'-0"	15/A8.4	15/A8.4	–	16/A8.4	
100A	21'-8"	10'-11"	SF7	ALUM.	GL-1-L	FF1	10'-11"	7/A8.7	15/A8.7	3/A8.7	8/A8.7	SEE WINDOW TYPES FOR EXTENT OF LAMINATED GLAZING
100B	21'-8"	10'-11"	SF7	ALUM.	GL-1-L	FF1	10'-11"	7/A8.7	15/A8.7	3/A8.7	8/A8.7	SEE WINDOW TYPES FOR EXTENT OF LAMINATED GLAZING
100C	20'-0"/VARIES	SEE WINDOW TYPES	CW1	ALUM.	GL-2	FF1/FF2	46'-0"/VARIES	9/A8.7	3/A8.7	4/A8.7	7/A8.7	SEE ALSO DETAIL 2/A8.7 FOR CONDITIONS OVER ROOF
100D	20'-0"/VARIES	SEE WINDOW TYPES	CW1	ALUM.	GL-2	FF1/FF2	46'-0"/VARIES	9/A8.7	3/A8.7	4/A8.7	7/A8.7	SEE ALSO DETAIL 2/A8.7 FOR CONDITIONS OVER ROOF
101A	8'-0"	8'-0"	SF1	ALUM.	GL-1-T	FF2	8'-0"	2/A8.5	3/A8.5	–	4/A8.5	SEE WINDOW TYPES FOR EXTENT OF TEMPERED GLAZING
101B	3'-2"	8'-0"	SF5	ALUM.	GL-1-T	FF2	8'-0"	2/A8.5	10/A8.5	–	4/A8.5	SEE WINDOW TYPES FOR EXTENT OF TEMPERED GLAZING
101C	3'-2"	8'-0"	SF5	ALUM.	GL-1-T	FF2	8'-0"	2/A8.5	10/A8.5	–	4/A8.5	SEE WINDOW TYPES FOR EXTENT OF TEMPERED GLAZING
106A	3'-2"	8'-0"	SF5	ALUM.	GL-1-T	FF2	8'-0"	2/A8.5	10/A8.5	–	4/A8.5	SEE WINDOW TYPES FOR EXTENT OF TEMPERED GLAZING
106B	8'-0"	8'-0"	SF1	ALUM.	GL-1-T	FF2	8'-0"	2/A8.5	3/A8.5	–	4/A8.5	SEE WINDOW TYPES FOR EXTENT OF TEMPERED GLAZING
106C	8'-0"	8'-0"	SF1	ALUM.	GL-1-T	FF2	8'-0"	2/A8.5	3/A8.5	–	4/A8.5	SEE WINDOW TYPES FOR EXTENT OF TEMPERED GLAZING
108	4'-3 1/2"	4'-3 1/2"	SF8	ALUM.	GL-1	FF2	6'-10"	9/A8.4	14/A8.4	–	11/A8.4	SEE ALSO DETAIL 10/A8.4 FOR PASS THRU HEAD
113A	3'-0"	4'-8"	SL1	ALUM.	GL-1	FF2	8'-0"	1/A8.4	6/A8.4	–	3/A8.4	
113B	3'-0"	4'-8"	SL1	ALUM.	GL-1	FF2	8'-0"	1/A8.4	6/A8.4	–	3/A8.4	
113C	3'-0"	4'-8"	SL1	ALUM.	GL-1	FF2	8'-0"	1/A8.4	6/A8.4	–	3/A8.4	
113D	3'-0"	5'-4"	SL1	ALUM.	GL-1	FF2	8'-0"	1/A8.4	6/A8.4	–	3/A8.4	
117	4'-2"	4'-2"	IA	ALUM.	GL-5	FF2	7'-0"	6/A9.4	6/A9.4	8/A9.4	7/A9.4	INTERIOR VIEWING WINDOW, ONE WAY GLAZING
201A	78'-0"	21'-0"	CW2	ALUM.	SEE WINDOW TYPES	FF2	29'-0"	6/A8.6	3/A8.6	11/A8.6	8/A8.6	FOR EXTENT OF GLAZING TYPES SEE WINDOW TYPES A11.2 SEE ALSO WALL SECTIONS 1/A3.21 AND 1/A3.26 FOR ADDITIONAL DETAIL CALLOUTS
201B	5'-9"	21'-0"	CW2	ALUM.	SEE WINDOW TYPES	FF2	29'-0"	6/A8.6	3/A8.6	2/A8.6	8/A8.6	FOR EXTENT OF GLAZING TYPES SEE WINDOW TYPES A11.2 SEE ALSO WALL SECTIONS 1/A3.21 AND 1/A3.26 FOR ADDITIONAL DETAIL CALLOUTS
204A	2'-3"	7'-0"	SF6	ALUM.	GL-4-T	FF2	7'-0"	6/A9.4 SIM.	6/A9.4 SIM.	6/A9.4 SIM.	3/A9.4	INTERIOR STOREFRONT SIDELIGHT WINDOWS
204B	4'-0"	12'-2"	SF2	ALUM.	SEE WINDOW TYPES	FF2	15'-0"	6/A8.5	3/A8.5	–	8/A8.5	WINDOWSHADE MANUALLY OPERATED
204C	4'-0"	12'-2"	SF2	ALUM.	SEE WINDOW TYPES	FF2	15'-0"	6/A8.5	3/A8.5	–	8/A8.5	WINDOWSHADE MANUALLY OPERATED
206	4'-0"	12'-2"	SF2	ALUM.	SEE WINDOW TYPES	FF2	15'-0"	6/A8.5	3/A8.5	–	8/A8.5	WINDOWSHADE MANUALLY OPERATED
210A	4'-0"	12'-2"	SF3	ALUM.	SEE WINDOW TYPES	FF2	15'-0"	6/A8.5	3/A8.5	–	8/A8.5	CORNER UNIT W/ 90 DEG. MULLION; WINDOWSHADE MANUALLY OPERATED
210B	8'-0"	12'-2"	SF4	ALUM.	SEE WINDOW TYPES	FF2	15'-0"	6/A8.5	3/A8.5	–	8/A8.5	WINDOWSHADE MANUALLY OPERATED
212	2'-3"	7'-0"	SF6	ALUM.	GL-4-T	FF2	7'-0"	6/A9.4 SIM.	6/A9.4 SIM.	6/A9.4 SIM.	3/A9.4	INTERIOR STOREFRONT SIDELIGHT WINDOWS

NOTES:

1. HEAD HEIGHT OF 8'-0" INDICATES THE DIMENSION TO INSIDE OF FRAME. DATUM LINE AROUND EXTERIOR OF BUILDING TO BE +/- 8'-2" A.F.F. TO MATCH TOP OF FRAME OF EXTERIOR DOORS.
   HEAD HEIGHT OF 7'-0" INDICATES THE DIMENSION TO INSIDE OF FRAME. DATUM LINE OF INTERIOR DOORS AND WINDOWS TO BE +/- 7'-2" A.F.F. TO MATCH TOP OF FRAME OF EXTERIOR DOORS.

2. DOOR FINISHES: FF1/FF2
   - FF1: DENOTES INTERIOR FINISH
   - FF2: DENOTES EXTERIOR FINISH

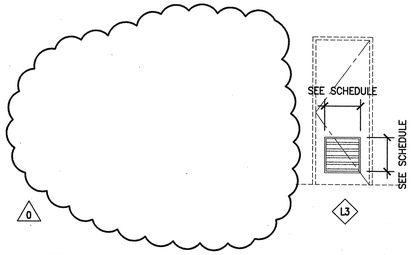

1 **LOUVER TYPES**
1/4"=1'-0"
DOORTYPS

LOUVER SCHEDULE

LOUVER TYPE	ROOM #	SIZE WDTH.	SIZE HT.	LOUVER MATR.	LOUVER GLAZ.	LOUVER FIN.	LOUVER HEAD HT.	DETAIL HEAD	DETAIL JAMB	DETAIL JAMB	DETAIL SILL	FIRE RATING	REMARKS
L3	007	2'-0"	2'-0"	ALUM.		PT7	–						ELEVATOR MACHINE ROOM DOOR-SEE DOOR SCHEDULE
L3	003	2'-0"	2'-0"	ALUM.		PT7	–						ELEVATOR MACHINE ROOM DOOR-SEE DOOR SCHEDULE

BSA Architects
A California Corporation
350 PACIFIC AVENUE
SAN FRANCISCO, CA 94111
415-781-1526

DIABLO VALLEY COLLEGE

DIABLO VALLEY COLLEGE NEW BOOKSTORE

321 GOLF CLUB RD.
PLEASANT HILL, CALIFORNIA

© 2003 BSA Architects
"All drawings and written material appearing herein constitute the original and unpublished work of the architect and the same may not be duplicated, used, or disclosed without the written consent of the architect."

DATE: 23 JULY, 2004

REVISIONS:
0 REVISIONS- 23 JULY, 2004

LICENSED ARCHITECT JOHN ASHWORTH No. C26747 REN. 1-31-05 STATE OF CALIFORNIA

BID SET

SHEET TITLE:
WINDOW SCHEDULE, LOUVER TYPES & SCHEDULE

IDENTIFICATION STAMP
DIVISION OF THE STATE ARCHITECT
105925
APPL 01
AC VE FLS ED SS A1
DATE: 5-12-04 JUL 26 2004

BLDG. ID: 098
ID CODE: 312098-109.01-A

DRAWN BY: JH
CHECKED BY: JA
JOB NO: 0307

SHEET A11.3

8/15/03 A11-03.DWG

EXTERIOR MATERIALS SCHEDULE

CODE	MATERIAL OR FINISH	DESCRIPTION	REMARKS
PT1	KYNAR FINISH	PPG KYNAR FINISH TO MATCH SHERWIN WILLIAMS "ROCKWOOD TERRA COTTA"	METAL FLASHING AT ST1
PT2	KYNAR FINISH	PPG KYNAR FINISH TO MATCH FACTORY FINISH KAWNEER CLEAR ANODIZED DARK BRONZE	CANOPY STRUCTURAL STEEL, RODS AND TURNBUCKLES, EXTERIOR H.M. DOORS AND FRAMES
PT3	KYNAR FINISH	PPG KYNAR FINISH TO MATCH SHERWIN WILLIAMS "CITYSCAPE" (PT7)	EXTERIOR STRUCTURAL STEEL COLUMNS AND BEAMS
FF1	KAWNEER FACTORY FINISH	WINDOW & DOOR FRAME ALUMINUM FINISH: KAWNEER "CLEAR ANODIZED DARK BRONZE"	
FF2	KAWNEER FACTORY FINISH	WINDOW & DOOR FRAME ALUMIUNUM FINISH: KAWNEER "CLEAR ANODIZED ALUMINUM"	
FF3	BHP HR-36 ZINCALUME	"ZINCALUME PLUS" FACTORY FINISH	DECKING AT CANOPIES
ST1	PORTLAND CEMENT PLASTER	3 COAT SYSTEM W/ 100% ELASTOMERIC ACRYLIC BINDER; BASE COAT: #400 FRENCH TOAST TOP COAT WASH: #365A IRISH COFFEE-3 APPLICATIONS	COLORS BY DRYVIT SYSTEMS BLENDED TO CREATE MOTTLED EFFECT FRY REGLET CHANNELS TO BE USED AS REVEALS AND CONTROL JOINTS ALL CHANNELS ARE CLEAR ANODIZED EXTRUDED ALUMINUM SEE DRAWINGS FOR REVEAL/SCORING PATTERN AND SIZES SEE SPECIFICATION
MF1	UNA CLAD EXTERIOR METAL CLADDING	SERIES 10 HONEYCOMB ALUMINUM PANELS, FACTORY FINISH "CITYSCAPE"	ALUM. HONEYCOMB INFILL, "WETSEAL" SYSTEM, DOW CORNING 795 SILICONE JOINT SEALANT; BRONZE
MF2	UNA CLAD EXTERIOR METAL CLADDING	SERIES 3000 ALUMINUM PLATE PANELS, FACTORY FINISH "CITYSCAPE"	"WETSEAL" SYSTEM, DOW CORNING 795 SILICONE JOINT SEALANT; COLOR: BRONZE
MF3	UNA CLAD EXTERIOR METAL CLADDING	SERIES 3000 ALUMINUM PLATE PANELS, FACTORY FINISH -COLOR TO BE SELECTED	"WETSEAL" SYSTEM, DOW CORNING 795 SILICONE JOINT SEALANT; COLOR: TO BE SELECTED
CC1	CAST IN PLACE CONCRETE	CAST IN PLACE CONCRETE WALLS WITH TIE HOLES	SEE STRUCTURAL DRAWINGS. FOR TIE HOLE PATTERN SEE DRAWING A3.3

NOTES: SPECIFIC MANUFACTURERS ARE LISTED ONLY TO ESTABLISH STANDARDS OF PERFORMANCE, QUALITY, FINISH AND COLOR. FOR "EQUAL AND OR," SEE SPECIFICATION.

MATERIALS SCHEDULE

CODE	MATERIAL OR FINISH	DESCRIPTION	REMARKS
AC1	ACOUSTIC PANEL CEILING	ARMSTRONG CIRRUS ANGLED TEGULAR, 2'x2' WHITE-"PRELUDE XL", 15/16" EXPOSED TEE SYSTEM, WHITE	
AC2	ACOUSTIC PANEL CEILING	ARMSTRONG CLEAN ROOM MYLAR 2'X2' WHITE-"PRELUDE XL," 15/16" EXPOSED TEE SYSTEM, WHITE	CAFE STORAGE CEILING
CB	CEMENT BACKER UNIT	CEMENTITIOUS BACKER BOARD	INSTALL OVER GB WHEREVER FIRE RATING IS REQUIRED
CPT1	CARPET	LEE'S DESIGNSCENE-T, 24" X 24" TILES #354 BEACH TAN	CARPET TILES QUARTER TURNED
CS1	CONCRETE FLOOR (FIELD COLOR)	TROWEL FINISH-LM SCOFIELD "CURESEAL" SEMI-GLOSS SEALER OVER LITHOCHROME "CHEMSTAIN"-COLOR - TBD	FIELD: APPLICATION OF CHEMSTAIN MAY REQUIRE PERCENTAGE DILUTION TO ATTAIN DESIRED LOOK THAT IS LIGHTER IN COLOR THAN BAND SEE SPECIFICATION.
CS2	CONCRETE FLOOR (BAND COLOR)	TROWEL FINISH-LM SCOFIELD "CURESEAL" SEMI-GLOSS SEALER OVER LITHOCHROME "CHEMSTAIN"-COLOR - TBD	
CS3	CONCRETE FLOOR	TROWEL FINISH-WITH LM SCOFIELD CLEAR "CURESEAL" SEMI-GLOSS SEALER	
CT1	CERAMIC TILE	4 1/4" x 4 1/4" - DAL-TILE, COLOR "BISCUIT" K175	1/16" GROUT JOINT
CT2	CERAMIC TILE	4 1/4" x 4 1/4" - DAL-TILE, COLOR "MEXICAN SAND" K174	1/16" GROUT JOINT
CT3	CERAMIC TILE	4 1/4" x 4 1/4" - DAL-TILE, COLOR "SUEDE GRAY" 0182	1/16" GROUT JOINT
GR	TILE GROUT	MAPEI - PEARL GRAY #19	
FRP1	FIBER REINFORCED PANEL	MARLITE - S-100-G WHITE	SMOOTH SURFACE, NO SCORED PATTERN
GB1	GYPSUM BOARD	5/8" TYPE X - REGULAR GYPSUM BOARD - LEVEL 5 FINISH	SEE SPEC.
GB2	GYPSUM BOARD	5/8" TYPE X - REGULAR GYPSUM BOARD - LEVEL 4 FINISH	SEE SPEC.
GB3	GYPSUM BOARD	5/8" TYPE X - WATER RESISTANT GYPSUM BOARD - LEVEL 4 FINISH	SEE SPEC.
PL1	PLASTIC LAMINATE	NEVAMAR - TEA STAIN SPUN YARN TEXTURED YSN-001T	COUNTERTOPS
PL2	PLASTIC LAMINATE	NEVAMAR - STRING TEXTURED S-6-52T	CASEWORK AND CABINET FACES
PT4	INTERIOR PAINT COLOR	SHERWIN WILLIAMS PURE WHITE #SW1004, SATIN FINISH	
PT5	INTERIOR PAINT COLOR	SHERWIN WILLIAMS PURE WHITE #SW1004, SEMI-GLOSS FINISH	ALL INTERIOR HOLLOW METAL DOORS AND FRAMES, U.ON.
PT6	INTERIOR PAINT COLOR	SHERWIN WILLIAMS FIRST STAR SW1003, SATIN FINISH	STRUCTURAL DECK, U.O.N.
PT7	INTERIOR PAINT COLOR	SHERWIN WILLIAMS CITYSCAPE SW7067, SEMI-GLOSS FINISH	STAIR POSTS, HANDRAILS, INFILL PANELS, ALL STRUCTURAL STEEL, U.O.N.
PT8	INTERIOR PAINT COLOR	SHERWIN WILLIAMS PORPOISE SW7047, SATIN FINISH	DECKING AND HORIZONTAL STRUCTURE IN CONVENIENCE AREA
PT9	INTERIOR PAINT COLOR	SHERWIN WILLIAMS CRAFTSMAN BROWN SW2835, SATIN FINISH	ACCENT WALLS AND ENTRY SOFFIT
PT10	INTERIOR PAINT COLOR	CUSTOM COLOR BY SHERWIN WILLIAMS, COLOR TO MATCH UNA CLAD "CITYSCAPE" - SATIN FINISH	
RB1	RESILIENT RUBBER TOELESS BASE	ROPPE RUBBER TOELESS BASE, DOLPHIN COLOR #P129	4" HIGH, CO-ORDINATE W/ STORE PLAN LAYOUT FOR LOCATIONS
RB2	RESILIENT RUBBER COVE BASE	ROPPE RUBBER COVE BASE, DOLPHIN COLOR #P129	4" HIGH, CO-ORDINATE W/ STORE PLAN LAYOUT FOR LOCATIONS
SP	SOLID PHENOLIC	BOBRICK S-431 WILLOW GREY	FLOOR MOUNTED TOILET PARTITIONS
SS1	SOLID SURFACE	AVONITE - NOUGAT K3-8500, SATIN FINISH	RESTROOM COUNTERTOPS, CAFE COUNTERTOP
SST1	SOLID SURFACE	STAINLESS STEEL, 14 GA.	PORTION OF CAFE COUNTERTOP AT PASS THRU WINDOW
SV1	SHEET VINYL FLOORING	ALTRO WALKWAY 20 - TUNDRA VM20910	INTEGRAL COVED BASE, MINIMUM 3/8" RADIUS & SEAMED FLOOR JOINTS
WS1	WINDOW SHADE	MECHOSHADE: THERMOVEIL SHADECLOTH 1000 SERIES - GREY 1003	SUBURBAN MODEL MANUALLY OPERATED
VCT1	VINYL COMPOSITION TILE	ARMSTRONG STANDARD EXCELON - SMOKEY BROWN #51868	

NOTES: SPECIFIC MANUFACTURERS ARE LISTED ONLY TO ESTABLISH STANDARDS OF PERFORMANCE, QUALITY, FINISH AND COLOR. FOR "EQUAL AND OR," SEE SPECIFICATION.
SCOFIELD CHEMSTAIN COLOR SELECTIONS AND SEALERS NOTED ARE TO ESTABLISH BEGINNING POINT ONLY. ONSITE MOCKUPS IN CONJUNCTION WITH DESIRED INTENT WILL DETERMINE FINAL SCOFIELD COLOR AND SEALER COMBINATION. SEE SPECIFICATION.

BSA Architects
A California Corporation
350 PACIFIC AVENUE
SAN FRANCISCO, CA 94111
415-781-1526

DIABLO VALLEY COLLEGE

DIABLO VALLEY COLLEGE NEW BOOKSTORE

321 GOLF CLUB RD.
PLEASANT HILL, CALIFORNIA

© 2003 BSA Architects
"All drawings and written material appearing herein constitute the original and unpublished work of the architect and the same may not be duplicated, used, or disclosed without the written consent of the architect."

DATE: 23 JULY, 2004

REVISIONS:

LICENSED ARCHITECT
JOHN ASHWORTH
No. C26747
REN. 1-31-05
STATE OF CALIFORNIA

BID SET

SHEET TITLE:

MATERIALS SCHEDULE

IDENTIFICATION STAMP
DIVISION OF THE STATE ARCHITECT
105925
APPL 01
AC LE FLS EO SS A7
DATE: 5-12-04 JUL 26 2004

BLDG. ID: 098
ID CODE: 312098-109.01-A

DRAWN BY: JH
CHECKED BY: JA
JOB NO: 0307

SHEET
A11.4

8/15/03 A11-04.DWG

EQUIPMENT SCHEDULE

EQUIP. #	EQUIPMENT	QUANTITY	LOCATION	PURCHASED BY	INSTALLED BY	NOTES
1	NOT USED	–	–	–	–	–
2	ESPRESSO MACHINE	2	CAFE	OWNER	CONTRACTOR	3, PROVIDE WATER LINE
3	COFFEE BREWER	1	CAFE	OWNER	CONTRACTOR	3, PROVIDE WATER LINE
4	GARBAGE DISPOSAL	1	CAFE, BREAK ROOM	OWNER	CONTRACTOR	3, 4
5	NOT USED	–	–	–	–	–
6	NOT USED	–	–	–	–	–
7	UNDERCOUNTER ICE MAKER	1	CAFE	OWNER	CONTRACTOR	3, 4, 5, PROVIDE WATER LINE
8	UNDERCOUNTER REFRIGERATOR	1	CAFE	OWNER	CONTRACTOR	3, 4, 5
9	PASTRY DISPLAY CASE	1	CAFE	OWNER	CONTRACTOR	3, 4
10	DISPLAY COOLERS	6	CONVENIENCE	OWNER	CONTRACTOR	3, 7
11	PROJECTION SCREEN	1	BREAK ROOM	OWNER	CONTRACTOR	2, 7, 14
12	REGISTER, P.O.S.	2	CAFE	OWNER	OWNER	9
13	METRO STORAGE RACKS	1	CAFE STORAGE	OWNER	CONTRACTOR	14, (7) 14"x48" SHELVES, 96" POSTS WALL ANCHOR PER 3/A10.3
14	SAFE	1	COUNTING	OWNER	OWNER	5
15	REFRIGERATOR	1	BREAK ROOM	OWNER	CONTRACTOR	3, 4, PROVIDE WATER HEATER
16	METRO STORAGE RACKS	2	CAFE STORAGE	OWNER	CONTRACTOR	14, (7) 24"x48" SHELVES, 96" POSTS

NOTES TO CONTRACTOR:

1 PROVIDE PAINTED PLYWOOD MOUNTING PANEL
2 PROVIDE BLOCKING IN WALLS FOR ANCHORAGE
3 COORD. INSTALLATION WITH MECHANICAL, PLUMBING, ELECTRICAL
4 COORD. INSTALLATION WITH CABINET WORK
5 COORD. INSTALLATION WITH COUNTER WORK
6 COORD. WITH STRUCTURAL
7 PROVIDE SUPPORT
8 COORD. WITH ELECTRICAL
9 ADDITIONAL REGISTERS REQ'D FOR RETAIL AREA. CO-ORD. W/ OWNER
10 NOT USED
11 NOT USED
12 NOT USED
13 NOT USED
14 ANCHOR TO WALL

GENERAL NOTES:

1 SEE MECHNICAL, PLUMBING AND ELECTRICAL FOR OTHER EQUIPMENT LISTS.

ROOM FINISH SCHEDULE

ROOM #	ROOM NAME	FLOOR MATERIAL	BASE MATERIAL	WALL MATERIAL	WALL FINISH	TRIM MATERIAL	TRIM FINISH	TRIM NOT USED	CASEWORK MATERIAL	CEILING MATERIAL	CEILING FINISH	REMARKS
001	RECEIVING/STORAGE	CS3	–	CC1	–	–	–		–	CC1	–	
003	ELEVATOR MECH.	CS3	–	CC1/GB2	/PT4	–	–		–	CC1	–	
004	ELECTRICAL	CS3	–	CC1/GB2	/PT4	–	–		–	CC1	–	
005	SECURE STORAGE	CS3	–	–	–	–	–		–	CC1	–	WOVEN WIRE PARTITION BY MANUFACTURER, PAINTED PT7
007	ELEVATOR MECHANICAL	CS3	–	CC1	–	–	–		–	CC1	–	
008	RECEIVING OFFICE	CS3	–	CC1	–	–	–		–	CC1	–	
009	BOILER ROOM	CS3	–	CC1	–	–	–		–	CC1	–	
014	STAIR 2	CS3	–	CC1	–	–	–		–	–	–	
020	ELEVATOR 1	–	–	–	–	–	–		–	–	–	SEE BELOW FOR ELEVATOR CAB FINISHES
021	ELEVATOR #3	–	–	–	–	–	–		–	–	–	SEE BELOW FOR ELEVATOR CAB FINISHES
100	MAIN ENTRY	CS1/CS2	RB2	GB1	PT4/MF1	–	–		–	–	PT6	NO CEILING MATERIAL, EXPOSED STRUCTURE AND DECKING AT CEILING
101	MAIN RETAIL	CS1/CS2	RB2	GB1	PT4	–	–		–	–	PT6	NO CEILING MATERIAL, EXPOSED STRUCTURE AND DECKING AT CEILING
102	CONVENIENCE STORE	CS1/CS2	RB2	GB1	PT4/MF1	–	–		–	–	PT8	NO CEILING MATERIAL, EXPOSED STRUCTURE AND DECKING AT CEILING
103	ELEVATOR MECH.	CS3	RB2	GB2	PT4	–	–		–	GB2	PT4	
104	JANITOR	SV1	SV1	GB3	PT5/FRP1	–	–		–	–	PT6	NO CEILING MATERIAL, FRP TO 48" AT MOP SINK, SEE TOILET ACCESS., INT. ELEVATIONS AND PLUMBING DRAWINGS
105	ELEVATOR 2	–	–	–	–	–	–		–	–	–	SEE BELOW FOR ELEVATOR CAB FINISHES
106	STAIR 1	–	–	–	–	–	–		–	–	–	
107	RESTROOM	CS1	CT1	CB/GB3	CT1/CT2/CT3/PT5	–	–		SS	GB3	PT5	CT WALL PATTERN – SEE DETAIL 10/A9.5
108	CAFE	SV1	SV1	GB3	PT5	–	–		SS/PL1/PL2	GB2	PT5	
109	CAFE STORAGE	CS3	CT1	GB3	PT5	–	–		SS/PL1/PL2	AC2/–	PT6	PART OF ROOM HAS NO CEILING MATERIAL. EXPOSED STRUCTURE AND DECKING AT CEILING. PAINT THIS PART ONLY.
110	DISPLAY COOLERS	CS3	RB2	GB3	–	–	–		–	–	PT6	
111	SERVICE	CS3	RB2	GB2	PT4	–	–		–	–	PT6	NO CEILING MATERIAL, EXPOSED STRUCTURE AND DECKING AT CEILING, 36" HIGH STAINLESS STEEL WAINSCOT
112	COUNTING	VCT1	RB2	GB2	PT4	–	–		PL1/PL2	–	PT6	NO CEILING MATERIAL, EXPOSED STRUCTURE AND DECKING AT CEILING
113	BUYBACK	VCT1	RB2	GB2	PT4	–	–		PL1/PL2	–	PT6	NO CEILING MATERIAL, EXPOSED STRUCTURE AND DECKING AT CEILING
114	STAIR 2	CS1	RB2	GB2	PT4	–	–		–	–	–	
115	ELECTRICAL	CS3	–	GB2	PT4	–	–		–	GB2	PT4	
117	SUPERVISOR'S OFFICE	CPT1	RB1	GB2	PT4	–	–		–	AC1	–	
118	CUSTOMER CARE	CPT1	RB1	GB2	PT4	–	–		–	AC1	–	
119	SECURITY OFFICE	CPT1	RB1	GB2	PT4	–	–		–	AC1	–	
120	ELEVATOR 3	–	–	–	–	–	–		–	–	–	SEE BELOW FOR ELEVATOR CAB FINISHES
121	ELEVATOR 1	–	–	–	–	–	–		–	–	–	SEE BELOW FOR ELEVATOR CAB FINISHES
201	ELEV. WALKWAY	CPT1	RB1	GB1	PT4	–	–		–	–	PT6	NO CEILING MATERIAL, EXPOSED STRUCTURE AND DECKING AT CEILING
202	SERVER	VCT1	RB2	GB2	PT4	–	–		–	–	PT6	NO CEILING MATERIAL, EXPOSED STRUCTURE AND DECKING AT CEILING
203	ELEV. VESTIBULE	CPT1	–	GB1	PT4	–	–		–	–	PT6	NO CEILING MATERIAL, EXPOSED STRUCTURE AND DECKING AT CEILING
204	OPEN OFFICE	CPT1	RB1	GB1	PT4/PT9	–	–		PL1/PL2	–	PT6	NO CEILING MATERIAL, EXPOSED STRUCTURE AND DECKING AT CEILING, SEE FINISH PLANS FOR CLARIFICATION
205	ELEVATOR 2	–	–	–	–	–	–		–	–	–	SEE BELOW FOR ELEVATOR CAB FINISHES
206	STORE MANAGER	CPT1	RB1	GB2	PT4	–	–		–	–	PT6	NO CEILING MATERIAL, EXPOSED STRUCTURE AND DECKING AT CEILING
207	STORAGE	VCT1	RB2	GB2	PT4	–	–		–	–	PT6	NO CEILING MATERIAL, EXPOSED STRUCTURE AND DECKING AT CEILING
210	MEETING/BREAK ROOM	CPT1/VCT1	RB1/RB2	GB2	PT4/PT9	–	–		PL1/PL2	–	PT6	NO CEILING MATERIAL, EXPOSED STRUCTURE AND DECKING AT CEILING, SEE FINISH PLANS FOR CLARIFICATION
212	OFFICE ASSISTANT	CPT1	RB1	GB2	PT4	–	–		–	–	PT6	NO CEILING MATERIAL, EXPOSED STRUCTURE AND DECKING AT CEILING
214	STAIR 2	CS1	RB2	GB2	PT4	–	–		–	GB2	PT6	
218	MENS RESTROOM	CS1	CT3	CB/GB3	CT1/CT2/CT3/PT5	–	–		SS	GB3	PT5	SOLID PHENOLIC PARTITIONS, SOLID SURFACE COUNTERTOP, CT WALL PATTERN – SEE DETAIL 10/A9.5
220	ELEVATOR 1	–	–	–	–	–	–		–	–	–	SEE BELOW FOR ELEVATOR CAB FINISHES
222	WOMENS RESTROOM	CS1	CT3	CB/GB3	CT1/CT2/CT3/PT5	–	–		SS	GB3	PT5	SOLID PHENOLIC PARTITIONS, SOLID SURFACE COUNTERTOP, CT WALL PATTERN – SEE DETAIL 10/A9.5
224	JANITOR	CS3	–	GB3	PT5/FRP1	–	–		–	–	PT5	NO CEILING MATERIAL, FRP TO 48" AT MOP SINK, SEE TOILET ACCESS., INT. ELEVATIONS AND PLUMBING DRAWINGS
226	BALCONY	CPT1	RB1	GB1	PT4	–	–		–	–	PT6	
228	BRIDGE	CPT1	–	–	–	–	–		–	–	–	

ROOM	ELEVATOR CAB COMPONENTS	OPTION/MATERIAL SELECTION	FINISH	REMARKS
105, 205	ELEVATOR #2 CAB FINISHES			
	CEILING	OPTION A: DIFFUSED LIGHTING	BAKED ENAMEL FINISH	
	WALL PANELS	APPLIED VERTICAL PANEL WITH REVEAL	#4 BRUSHED STAINLESS STEEL PANEL FINISH: REVEAL– BLACK BAKED ENAMEL	
	FLOOR	CARPET	CPT1–SEE MATERIALS SCHEDULE	
	HANDRAILS	OPTION A: CYLINDRICAL	#4 BRUSHED STAINLESS STEEL FINISH	
	BINDER	STAINLESS STEEL	#4 BRUSHED STAINLESS STEEL FINISH	
	DOORS AND SILL	CENTER OPENING DOOR WITH ALUMINUM SILL	#4 BRUSHED STAINLESS STEEL FINISH	
	FRONT	WRAP AROUND	#4 BRUSHED STAINLESS STEEL FINISH	
	SIGNALS	"VANDAL RESISTANT"	#4 BRUSHED STAINLESS STEEL FINISH	
020,120,220	ELEVATOR #1 CAB FINISHES			
	CEILING	OPTION A: DIFFUSED LIGHTING	BAKED ENAMEL FINISH	
	WALL PANELS	APPLIED VERTICAL PANEL WITH REVEAL	#4 BRUSHED STAINLESS STEEL PANEL FINISH: REVEAL– BLACK BAKED ENAMEL	
	FLOOR	SHEET VINYL FLOORING	SV1–SEE MATERIALS SCHEDULE	
	HANDRAILS	OPTION D: 2" CONTINUOUS FLAT BAR	#4 BRUSHED STAINLESS STEEL FINISH	PROVIDE 6 TOTAL HANDRAILS: 2ND ROW AS LOWER LEVEL BUMPSTOP, TO BE MOUNTED 18" OFF FLOOR
	BINDER	STAINLESS STEEL	#4 BRUSHED STAINLESS STEEL FINISH	
	DOORS AND SILL	CENTER OPENING DOOR WITH ALUMINUM SILL	#4 BRUSHED STAINLESS STEEL FINISH	
	FRONT	WRAP AROUND	#4 BRUSHED STAINLESS STEEL FINISH	
	SIGNALS	"VANDAL RESISTANT"	#4 BRUSHED STAINLESS STEEL FINISH	
021,121	ELEVATOR #3 CAB FINISHES			
	CEILING	OPTION A: DIFFUSED LIGHTING	BAKED ENAMEL FINISH	
	WALL PANELS	FLAT WALL	#4 BRUSHED STAINLESS STEEL WALL FINISH	
	FLOOR	SHEET VINYL FLOORING	SV1–SEE MATERIALS SCHEDULE	
	HANDRAILS	OPTION D: 2" CONTINUOUS FLAT BAR	#4 BRUSHED STAINLESS STEEL FINISH	PROVIDE 6 TOTAL HANDRAILS: 2ND ROW AS LOWER LEVEL BUMPSTOP, TO BE MOUNTED 18" OFF FLOOR
	BINDER	STAINLESS STEEL	#4 BRUSHED STAINLESS STEEL FINISH	
	DOORS AND SILL	CENTER OPENING DOOR WITH ALUMINUM SILL	#4 BRUSHED STAINLESS STEEL FINISH	
	FRONT	WRAP AROUND	#4 BRUSHED STAINLESS STEEL FINISH	
	SIGNALS	"VANDAL RESISTANT"	#4 BRUSHED STAINLESS STEEL FINISH	

NOTES: SEE FINISH FLOOR PLANS FOR CLARIFICATION ON EXTENT OF FINISHES.

BSA Architects
A California Corporation
350 PACIFIC AVENUE
SAN FRANCISCO, CA 94111
415–781–1526

DIABLO VALLEY COLLEGE

DIABLO VALLEY COLLEGE
NEW BOOKSTORE

321 GOLF CLUB RD.
PLEASANT HILL, CALIFORNIA

© 2003 BSA Architects
"All drawings and written material appearing herein constitute the original and unpublished work of the architect and the same may not be duplicated, used, or disclosed without the written consent of the architect."

DATE: 23 JULY, 2004

REVISIONS:

LICENSED ARCHITECT JOHN ASHWORTH No. C26747 REN. 1-31-05 STATE OF CALIFORNIA

BID SET

SHEET TITLE:

ROOM FINISH & EQUIPMENT SCHEDULES

IDENTIFICATION STAMP
DIVISION OF THE STATE ARCHITECT
105925
APPL 01
AC LE FLS EO SS AT
DATE: 5-12-04 JUL 20 2004

BLDG. ID: 098
ID CODE: 312098-109.01-A

DRAWN BY: JH
CHECKED BY: JA
JOB NO: 0307

SHEET A11.5

8/15/03 A11-05.DWG

GENERAL STRUCTURAL NOTES

I. GENERAL

A. DRAWINGS AND SPECIFICATIONS REPRESENT FINISHED STRUCTURE. CONTRACTOR SHALL BE RESPONSIBLE FOR MEANS AND METHODS OF CONSTRUCTION INCLUDING BUT NOT LIMITED TO SHORING AND TEMPORARY BRACING. THE CONTRACTOR SHALL TAKE ALL NECESSARY MEASURES TO ENSURE SAFETY OF ALL PERSONS AND STRUCTURES AT THE SITE AND ADJACENT TO THE SITE. OBSERVATION VISITS TO THE SITE BY THE ARCHITECT, ENGINEER OR CONSTRUCTION MANAGER SHALL NOT RELIEVE THE CONTRACTOR OF SUCH RESPONSIBILITY.

B. HOLES AND OPENINGS THROUGH WALLS AND FLOORS FOR DUCTS, PIPING AND VENTILATIONS SHALL BE COORDINATED BY THE CONTRACTOR WHO SHALL VERIFY SIZES AND LOCATION OF SUCH HOLES OR OPENINGS WITH THE MECHANICAL, PLUMBING, AND ELECTRICAL DRAWINGS AND THESE SUB-CONTRACTORS.

C. NO PIPES OR DUCTS SHALL BE EMBEDDED IN SLABS OR WALLS UNLESS SPECIFICALLY DETAILED OR APPROVED BY THE ARCHITECT.

D. SEE DRAWINGS OTHER THAN STRUCTURAL FOR: KINDS OF FLOOR FINISH AND THEIR LOCATION, FOR DEPRESSIONS IN FLOOR SLABS, FOR OPENINGS IN WALLS AND FLOORS REQUIRED BY ARCHITECTURAL AND MECHANICAL FEATURES, FOR ROADWAY PAVING, WALKS, RAMPS, STAIRS, CURBS, ETC.

E. CONTRACTOR SHALL VERIFY ALL DIMENSIONS AT JOB SITE BEFORE COMMENCING WORK AND SHALL REPORT ANY DISCREPANCIES TO THE ARCHITECT.

F. OMISSIONS OR CONFLICTS BETWEEN VARIOUS ELEMENTS OF THE DRAWINGS, NOTES, AND DETAILS SHALL BE BROUGHT TO THE ATTENTION OF THE ARCHITECT AND RESOLVED BEFORE PROCEEDING WITH THE WORK.

G. DO NOT USE SCALED DIMENSIONS; USE WRITTEN DIMENSIONS. WHERE NO DIMENSION IS PROVIDED, CONSULT THE ARCHITECT FOR CLARIFICATION BEFORE PROCEEDING WITH THE WORK.

H. WHERE MEMBER LOCATIONS ARE NOT SPECIFICALLY DIMENSIONED, MEMBERS ARE EITHER LOCATED ON COLUMN LINES OR EQUALLY SPACED BETWEEN MEMBERS ON COLUMN LINES OR BETWEEN MEMBERS OTHERWISE LOCATED.

I. TYPICAL DETAILS ARE INTENDED TO APPLY TO APPLICABLE SITUATIONS UON. IN GENERAL, TYPICAL DETAILS ARE NOT SPECIFICALLY REFERENCED.

J. IF CERTAIN FEATURES ARE NOT FULLY SHOWN OR CALLED FOR ON THE DRAWINGS OR SPECIFICATIONS, THEIR CONSTRUCTION SHALL BE OF THE SAME CHARACTER AS FOR SIMILAR CONDITIONS THAT ARE CALLED FOR OR SHOWN.

K. THE INTENT OF THE DRAWINGS AND SPECIFICATIONS IS TO CONSTRUCT THE SCHOOL BUILDING IN ACCORDANCE WITH THE 2001 EDITION OF TITLE 24, CALIFORNIA CODE OF REGULATIONS. SHOULD ANY CONDITIONS DEVELOP NOT COVERED BY THE CONTRACT DOCUMENTS WHEREIN THE FINISHED WORK WILL NOT COMPLY WITH TITLE 24, CALIFORNIA CODE OF REGULATIONS, A CHANGE ORDER DETAILING AND SPECIFYING THE REQUIRED WORK SHALL BE SUBMITTED TO AND APPROVED BY DSA BEFORE PROCEEDING WITH THE WORK.

III. DESIGN BASIS

A. CALIFORNIA BUILDING CODE (CBC), 2001 EDITION, WITH DSA/SSS AMENDMENTS.

B. VERTICAL LIVE LOADS:

1. OFFICES:
   50 PSF PLUS 30 PSF INCIDENTAL LIVE LOAD.
   (PLUS 20 PSF DEAD LOAD FOR PARTITIONS).
2. EXITS AND CORRIDORS:
   100 PSF. (NON-REDUCIBLE).
3. STORAGE RM 207: 200 PSF
4. ROOF: 20 PSF PLUS MECHANICAL.
5. TUNNEL: AASHTO HS20-4 (TRUCK LOADING)

C. LATERAL LOADS:

1. DESIGN WIND SPEED = 70 MPH; EXPOSURE C; IMPORTANCE = 1.00
2. SEISMIC: STATIC FORCE PROCEDURE
   ZONE = 4, SOIL TYPE = Sc, Na = 1.19, Nv = 1.45,
   I = 1.15
   R = 6.4 (SCBF)
   DESIGN BASE SHEAR, V = 0.214 W x 1.25
   DYNAMIC AMPLIFICATION FACTOR = 1.25 PER CBC 1631A.5.4.

D. FOUNDATION DESIGN CRITERIA

1. SIZES OF FOOTINGS AND ELEVATIONS AT BOTTOMS OF FOOTINGS HAVE BEEN ESTABLISHED BASED ON THE SOILS REPORT, GEOTECHNICAL INVESTIGATION REPORT FOR THE NEW BOOKSTORE AT DIABLO VALLEY COLLEGE, PLEASANT HILL, CALIFORNIA, DATED AUG. 19, 2003; AND SUPPLEMENTAL RECOMMENDATIONS AND CLARIFICATIONS DATED NOV. 10, 2003 AS PREPARED BY KLEINFELDER. AS EXCAVATION PROGRESSES, CONDITIONS MAY DEVELOP REQUIRING CHANGES IN THESE ELEVATIONS AND/OR FOOTINGS. SUCH CHANGES SHALL BE MADE ONLY AS DIRECTED BY THE SOILS ENGINEER.
2. SPREAD FOOTINGS: ALLOWABLE SOIL BEARING PRESSURES ARE:

   DEAD + LIVE LOADS 6000 PSF
   DEAD + LIVE + SEISMIC LOADS 8000 PSF

   FOOTINGS SHALL EXTEND A MINIMUM OF 18 INCHES BELOW LOWEST ADJACENT FINISHED GRADE AND SHALL BE EMBEDDED A MINIMUM OF 6" INTO SANDSTONE BEDROCK. IF SOIL IS ENCOUNTERED AT THE FOOTING BOTTOM ELEVATION THE SOIL SHALL BE EXCAVATED AND THE SPACE BETWEEN THE FOOTING BOTTOM AND THE COMPETENT BEDROCK SHALL BE FILLED WITH A LEAN CONCRETE MIX.

IV. MATERIALS

A. CONCRETE

1. REINFORCING STEEL:
   a. BARS: ASTM A615, GRADE 60.
   b. WELDED BARS: ASTM A706
   c. ALL CONCRETE SHALL BE REINFORCED UNLESS SPECIFICALLY MARKED 'NOT REINFORCED'.
   d. PROVIDE DOWELS INTO FOOTINGS AND SLABS ABOVE AT WALLS AND COLS OF SAME SIZE AND SPACING AS VERTICAL REINFORCEMENT.
   e. ALL REINFORCEMENT MAY BE SPLICED WITH COUPLERS WHICH ARE 125% OF BAR STRENGTH OR GREATER. SEE SPECIFICATIONS.
2. CONCRETE CLASSES: SEE SPECIFICATIONS FOR REQUIREMENTS.

CLASS	USE	WT	STRENGTH
A	FOUNDATIONS, SLABS-ON-GRADE	145 PCF	3000 PSI
B	COLUMNS, BEAMS, WALLS SUPPORTED SLABS	145 PCF	4000 PSI
C	LIGHTWEIGHT FILL ON STEEL DECK	110 PCF	3000 PSI

3. MINIMUM CONCRETE COVER FOR REINFORCING STEEL:
   a. SURFACES PLACED AGAINST EARTH 3"
   b. FORMED SURFACES BELOW GRADE 2"
   c. SURFACES EXPOSED TO WEATHER 2"
   d. BEAM AND COLUMN BARS (INCLUDING STIRRUPS OR TIES) 1-1/2"
   e. EXTERIOR WALL AT EXTERIOR FACE 1-1/2"
   f. SLABS AND WALLS NOT EXPOSED TO WEATHER 1"

C. STEEL

1. SHAPE / MATERIAL
   WIDE FLANGES: ASTM A992, GRADE 50
   PLATES: ASTM A572, GRADE 50
   ANGLES & CHANNELS: ASTM A36
   TUBES: ASTM A500, GRADE B
   PIPES: ASTM A53, GRADE B
2. BOLTS: ASTM A325-SC.
3. STEEL DECK: ASTM A653, GRADE A.
4. WELDING ELECTRODES: E-70.
   USE ELECTRODES WITH CHARPY V-NOTCH VALUES OF 20FT-LBS AT MINUS 20 DEGREES F OR BETTER.
5. ANCHOR RODS: ASTM F1554: Fy = 36 OR 55 ksi AS NOTED ON DRAWINGS.
6. WELDED STUDS: FLUX FILLED HEADED ANCHOR STUDS TYPE H4L OR S3L BY NELSON OR EQUAL.
7. STRUCTURAL STEEL MEMBERS AND THEIR CONNECTIONS DENOTED "A.E.S.S." SHALL COMPLY WITH SECTION 10, ARCHITECTURALLY EXPOSED STRUCTURAL STEEL OF THE AISC CODE OF STANDARD PRACTICE, FOR FABRICATION, ERECTION TOLERANCES AND SURFACE FINISHES.

V. QUALITY CONTROL

A. THE FOLLOWING WORK REQUIRES TESTS AND/OR INSPECTIONS. FOR SPECIFIC REQUIREMENTS SEE SPECIFICATIONS. INSPECTIONS SHALL BE MADE IN ACCORDANCE WITH CBC 1701A BY A DSA CERTIFIED SPECIAL INSPECTOR RETAINED BY THE OWNER.

1. FOOTING EXCAVATION
2. SOIL COMPACTION
3. REINFORCING STEEL & ANCHOR BOLTS
4. CONCRETE
5. EXPANSION BOLTS
6. GROUTED DOWELS
7. WELDING: REBAR, STRUCTURAL STEEL, METAL DECK, WELDED STUDS
8. HIGH STRENGTH BOLTS

B. A PARTIAL LISTING OF REQUIRED STRUCTURAL SUBMITTALS FOLLOWS. CONSULT THE SPECIFICATIONS FOR A COMPLETE LISTING OF SUBMITTAL REQUIREMENTS.

1. CONCRETE MIX DESIGNS
2. CONSTRUCTION JOINT LAYOUT & CONTROL JOINT LAYOUT
3. REINFORCING STEEL SHOP DRAWINGS
4. STRUCTURAL STEEL AND STEEL DECK SHOP DRAWINGS
5. MANUFACTURER'S DATA FOR INSERTS, GROUTS & EPOXIES
6. WELDING ELECTRODE DATA AND WELDING PROCEDURE SPECIFICATIONS
7. DEFERRED APPROVALS INCLUDING ELEVATOR AND CURTAIN WALL SYSTEMS. SEE SPECIFICATIONS AND DETAIL 5/S7.5 .

VI. EXPANSION ANCHORS

1. TYPICAL EXPANSION BOLTS ARE CARBON STEEL HILTI KWIK-BOLTS II AND SHALL COMPLY TO ICBO REPORT #4627 (2/2001).

ALLOWABLE LOAD WITH NORMAL WEIGHT CONCRETE (F'c=3000 PSI)

DIA.	MINIMUM EFFECTIVE EMBED.	SHEAR	TENSION	TENSION TEST VALUE	TORQUE TEST VALUE
1/4"	2"	320#	440#	880#	7 FT-LBS.
3/8"	2-1/2"	880#	968#	1936#	25 FT-LBS.
1/2"	3-1/2"	1472#	1600#	3200#	45 FT-LBS.
5/8"	4"	2500#	2136#	4272#	95 FT.-LBS.
3/4	4 3/4"	3380#	2900#	5800#	225 FT.-LBS.
1"	6"	6900#	4248#	8496#	325 FT.-LBS.

ALLOWABLE LOAD WITH LIGHT WEIGHT CONCRETE (F'c=3000 PSI) OVER METAL DECK

DIA.	MINIMUM EFFECTIVE EMBED.	SHEAR	TENSION	TENSION TEST VALUE	TORQUE TEST VALUE
1/4"	2¼"	392#	448#	896#	4 FT-LBS.
3/8"	2-1/4"	800#	632#	1264#	15 FT-LBS.
1/2"	2-1/4"	800#	704#	1408#	25 FT-LBS.
5/8"	4½"	2060#	1340#	2680#	45 FT.-LBS.

THESE LOADS CORRESPOND TO 80% OF THE ICBO ALLOWABLES. INCREASE OF 33% FOR COMBINATION WITH WIND OR SEISMIC FORCES IS ALLOWED. SPECIAL INSPECTION OF EXPANSION BOLTS IS REQUIRED.

2. INSTALLATION: INSTALL EXPANSION BOLTS IN ACCORDANCE WITH THE REQUIREMENTS GIVEN IN ICBO RESEARCH COMMITTEE RECOMMENDATIONS FOR THE SPECIFIC EXPANSION BOLT.
3. FIELD TESTING: TENSION TEST DRILLED IN ANCHORAGE TO 160 PERCENT TIMES THE ICBO ALLOWABLE LOAD WITH SPECIAL INSPECTION, OR TORQUE TEST TO VALUES AS TABULATED IN NOTE 1 ABOVE. TESTS SHALL BE MADE IN THE PRESENCE OF THE OWNER'S PROJECT REPRESENTATIVE. TEST 50% OF EACH DIAMETER GROUP OF EXPANSION BOLT. IF ANY ANCHOR FAILS TESTING, TEST ALL ANCHORS OF THE SAME CATEGORY NOT PREVIOUSLY TESTED UNTIL 20 CONSECUTIVE PASS. TESTING SHOULD OCCUR 24 HOURS MINIMUM AFTER INSTALLATION OF THE SUBJECT ANCHORS. ALL ANCHORS INSTALLED ON THE SAME DAY AS AN ANCHOR THAT FAILED SHALL BE TESTED, AND ALL COSTS OF SUCH TESTS AND INSPECTIONS SHALL BE DEDUCTED FROM THE CONTRACT SUM.
4. TENSION TESTS: APPLY TEST LOADS TO EXPANSION BOLTS WITHOUT REMOVING THE NUT, IF POSSIBLE. IF NOT, REMOVE NUT AND INSTALL A THREADED COUPLER TO THE SAME TIGHTNESS OF THE ORIGINAL NUT USING A TORQUE WRENCH AND APPLY LOAD. REACTION LOADS FROM TEST FIXTURES MAY BE APPLIED CLOSE TO THE ANCHOR BEING TESTED, PROVIDED THE BOLT IS NOT RESTRAINED FROM WITHDRAWING BY THE FIXTURE. TEST EQUIPMENT IS TO BE CALIBRATED BY AN APPROVED TESTING LABORATORY IN ACCORDANCE WITH STANDARD RECOGNIZED PROCEDURES. BOLTS SHOULD HAVE NO OBSERVABLE MOVEMENT AT THE TEST LOAD TO BE ACCEPTABLE. (OBSERVABLE MOVEMENT IS DEFINED AS THE WASHER UNDER THE NUT BECOMING LOOSE).
5. TORQUE WRENCH TEST: THE APPLICABLE TEST TORQUE MUST BE REACHED WITHIN ONE-HALF (1/2) TURN OF THE NUT.
6. WHEN INSTALLING DRILLED-IN ANCHORS AND /OR POWDER DRIVEN PINS IN EXISTING NON-PRESTRESSED REINFORCED CONCRETE, USE CARE AND CAUTION TO AVOID CUTTING OR DAMAGING THE EXISTING REINFORCING BARS.
7. EXPANSION ANCHORS INSTALLED FROM THE UNDERSIDE OF METAL DECK SHALL BE LOCATED IN THE CENTER OF THE LOW FLUTE. THE MINIMUM EMBEDMENT SHALL BE 1 1/2" ABOVE THE TOP FLUTE OF THE DECK (EXCEPT 1/4" ANCHORS FOR CEILINGS). THE EFFECTIVE EMBEDMENT DEPTH SHALL BE 1/3 OF THE METAL DECK HEIGHT PLUS THE 1 1/2" MINIMUM NOTED ABOVE. MAINTAIN MINIMUM OF 1" CLEAR TO THE TOP OF CONCRETE.

VII. ABBREVIATIONS

ø	DIAMETER	MB	UNFINISHED MACHINE BOLTS
AB	ANCHOR BOLT	MAX	MAXIMUM
ARCH	ARCHITECTURAL	MECH	MECHANICAL
BLDG	BUILDING	MFR	MANUFACTURER
BLK'G	BLOCKING	MTL	METAL
BM	BEAM	MIN	MINIMUM
BOT	BOTTOM	MISC	MISCELLANEOUS
CL	CENTER LINE	NIC	NOT IN CONTRACT
CJ	CONSTRUCTION JOINT	NOM	NOMINAL
CLR	CLEAR	NTS	NOT TO SCALE
CMU	CONCRETE MASONRY UNIT	OC	ON CENTER
COL	COLUMN	OD (ID)	OUTSIDE (INSIDE) DIAMETER
CONN	CONNECTION	OPG	OPENING
CONT	CONTINUOUS	OPP	OPPOSITE
CP	COMPLETE JOINT PENETRATION	PAF	POWER ACTUATED FASTENER
CTR	CENTER	PL	PLATE
CTRSK	COUNTERSINK	PP	PARTIAL JOINT PENETRATION
DET	DETAIL	PT	POINT
DWG	DRAWING	PTN	PARTITION
(E)	EXISTING	REF	REFERENCE
EA	EACH	REINF	REINFORCEMENT
EF	EACH FACE	REQ	REQUIRED
EL OR ELEV	ELEVATION	SAD	SEE ARCHITECTURAL DRAWINGS
ELECT	ELECTRICAL	SCHED	SCHEDULE
EQ	EQUAL	SECT	SECTION
EOS	EDGE OF SLAB	SHT	SHEET
EOD	EDGE OF DECK	SIM	SIMILAR
EW	EACH WAY	SMD	SEE MECHANICAL DRAWINGS
EXT	EXTERIOR	SPA	SPACE
FDN	FOUNDATION	SPEC	SPECIFICATION
FIN	FINISH	SQ	SQUARE
FL OR FLR	FLOOR	STAGG'D	STAGGERED
FOC	FACE OF CONCRETE	STD	STANDARD
FRM'G	FRAMING	STL	STEEL
FTG	FOOTING	STRUCT	STRUCTURAL
GA	GAUGE	SYMM	SYMMETRICAL
GALV	GALVANIZED	T&B	TOP AND BOTTOM
HORIZ	HORIZONTAL	THRD'D	THREADED
HSB	HIGH STRENGTH BOLT	TOC	TOP OF CONCRETE
HT	HEIGHT	TOS	TOP OF STEEL
INT	INTERIOR	TW	TOP OF WALL
JT	JOINT	TYP	TYPICAL
LLH (LLV)	LONG LEG HORIZONTAL (VERTICAL)	UON	UNLESS OTHERWISE NOTED
LT	LIGHT	VERT	VERTICAL
LT WT	LIGHT WEIGHT	WP	WORK POINT
		WT	WEIGHT

LEGEND

SYMBOL	DESCRIPTION	REF DETAIL
	CONCRETE WALL ABOVE FLOOR LEVEL	10/S5.2
BF-X	BRACED FRAME ABOVE	SHT S3.1
BF-X	BRACED FRAME BELOW	SHT S3.1
S — - — S	STEP IN GRADE BEAM ELEVATION	16/S5.1
	CONCRETE CURB	4,8/S5.1 16/S7.1
	CHANGE IN FINISH FLOOR ELEVATION	3/S5.1 9/S7.6

DASSE DESIGN INC.
STRUCTURAL ENGINEERS
33 New Montgomery St., Suite 850
San Francisco CA 94105
415/243-8400 — Fax 415/243-9165

DIABLO VALLEY COLLEGE

DIABLO VALLEY COLLEGE NEW BOOKSTORE

321 GOLF CLUB RD.
PLEASANT HILL, CALIFORNIA

REGISTERED PROFESSIONAL ENGINEER WILLIAM A. ANDREWS No. S3743 Exp. 3-31-06 STRUCTURAL STATE OF CALIFORNIA

DATE: 23 JULY 2004

REVISIONS:

BID SET

FOR PLAN REVIEW ONLY

SHEET TITLE:
GENERAL STRUCTURAL NOTES

IDENTIFICATION STAMP
DIVISION OF THE STATE ARCHITECT
105925
APPL 01
AC ___ FLS ___ SS ___
DATE: 5-12-04 JUL 26 2004

BLDG. ID: 098
ID CODE: 312098-109.01-A

DRAWN BY: BH
CHECKED BY: SAG
JOB NO: 03B197

SHEET S1.0

FILE: E:\2003 Jobs\03B197\structure\03B197S10.dwg05/04/04 at 14:16
XREF: 03B197TB.dwg

2796847

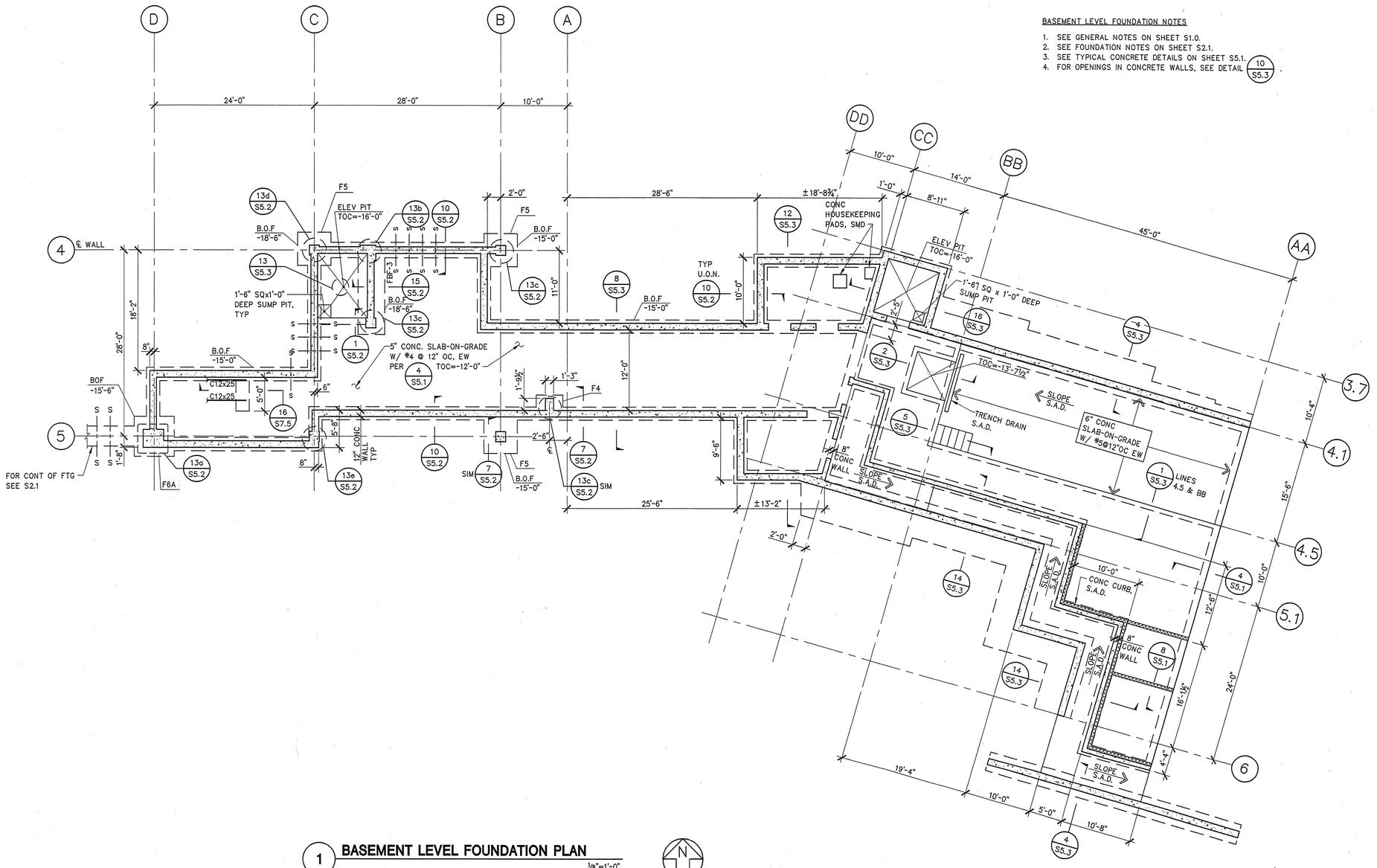

BASEMENT LEVEL FOUNDATION NOTES

1. SEE GENERAL NOTES ON SHEET S1.0.
2. SEE FOUNDATION NOTES ON SHEET S2.1.
3. SEE TYPICAL CONCRETE DETAILS ON SHEET S5.1.
4. FOR OPENINGS IN CONCRETE WALLS, SEE DETAIL 10/S5.3.

1 BASEMENT LEVEL FOUNDATION PLAN

1/8"=1'-0"

DASSE
DESIGN INC.
STRUCTURAL ENGINEERS
33 New Montgomery St., Suite 850
San Francisco CA 94105
415/243-8400 – Fax 415/243-9165

DIABLO VALLEY COLLEGE

DIABLO VALLEY
COLLEGE
NEW BOOKSTORE

321 GOLF CLUB RD.
PLEASANT HILL, CALIFORNIA

REGISTERED PROFESSIONAL ENGINEER
WILLIAM A. ANDREWS
S 3773
Exp. 3-31-06
STRUCTURAL
STATE OF CALIFORNIA

DATE: 23 JULY, 2004

REVISIONS:

BID SET

FOR PLAN REVIEW ONLY

SHEET TITLE:

BASEMENT LEVEL FOUNDATION PLAN

IDENTIFICATION STAMP
DIVISION OF THE STATE ARCHITECT
105925
APPL 01
AC ___ FLS ___ SS ___
DATE: 5-12-04 JUL 26 2004

BLDG. ID: 098
ID CODE: 312098-109.01-A

DRAWN BY: BH
CHECKED BY: SAG
JOB NO: 03B197

SHEET
S2.0

FILE: E:\2003 Jobs\03B197\struct\03B197S20.DWG05/10/04 at 13:35
XREF: E:\2003 Jobs\03B197\arch\plan-0.dwg
XREF: 03B197TB.dwg
XREF: L:\plan.dwg

FOUNDATION NOTES

1. SEE GENERAL NOTES ON SHEET S1.0.
2. SEE FLOOR FRAMING NOTES ON SHEET S2.2.
3. SEE TYPICAL CONCRETE DETAILS ON SHEET S5.1.
4. FOUNDATION PLAN IS TAKEN ABOVE SLAB-ON-GRADE. NOMINAL TOP OF SLAB ELEVATION IS CALLED OUT IN PLAN. RELATIVE SLAB ELEVATIONS WITH RESPECT TO SLAB REFERENCE ELEVATION ARE SHOWN THUS: (-0' - 2").
5. ELEVATIONS OF BOTTOM OF FOOTINGS WITH RESPECT TO SLAB REFERENCE ELEVATIONS ARE SHOWN THUS: -5'-11'.
6. SEE GENERAL NOTES ON S1.0 FOR FOOTING DESIGN CRITERIA.
7. EXCAVATIONS SHALL BE MADE AS NEAR AS POSSIBLE TO THE NEAT LINES REQUIRED BY THE SIZE AND SHAPE OF THE STRUCTURE. NO MATERIAL IS TO BE EXCAVATED UNNECESSARILY.
8. ALL FOUNDATION EXCAVATIONS MUST BE REVIEWED AND APPROVED BY THE SOILS ENGINEER PRIOR TO PLACEMENT OF CONCRETE.
9. VERIFY LOCATION OF UNDERGROUND UTILITIES BEFORE EXCAVATION. NOTIFY ARCHITECT PRIOR TO EXCAVATION IN THE EVENT SUCH UTILITIES ARE ENCOUNTERED.
10. FOR DRAINAGE DETAILS, SUMPS, PITS, DAMP PROOFING, TRENCHES, CURBS, EXTERIOR WALKS, UTILITIES, EQUIPMENT DETAILS, STEPS, ETC., SEE DRAWINGS OTHER THAN STRUCTURAL.
11. MARKS F1, ETC. DENOTE FOOTING TYPE. SEE FOOTING SCHEDULE ON SHEET 5.2.
12. MARKS S----S DENOTE STEP IN GRADE BEAM. SEE DETAIL 16/S5.1.
13. MARKS BF-1, ETC. DENOTE BRACED FRAME TYPE. SEE SHEET S3.1 FOR BRACED FRAME ELEVATIONS AND DETAILS.
14. MARKS C1 ETC. DENOTE COLUMN TYPE. SEE SHEET S7.2 FOR COLUMN SCHEDULE.
15. SLAB CONSTRUCTION AND CONTROL JOINT LOCATIONS SHALL BE APPROVED BY THE ARCHITECT PRIOR TO PLACING ANY CONCRETE.
16. DENOTES CHANGE IN SLAB ELEVATION. SEE DETAIL 3/S5.1 OR 9/S7.6.

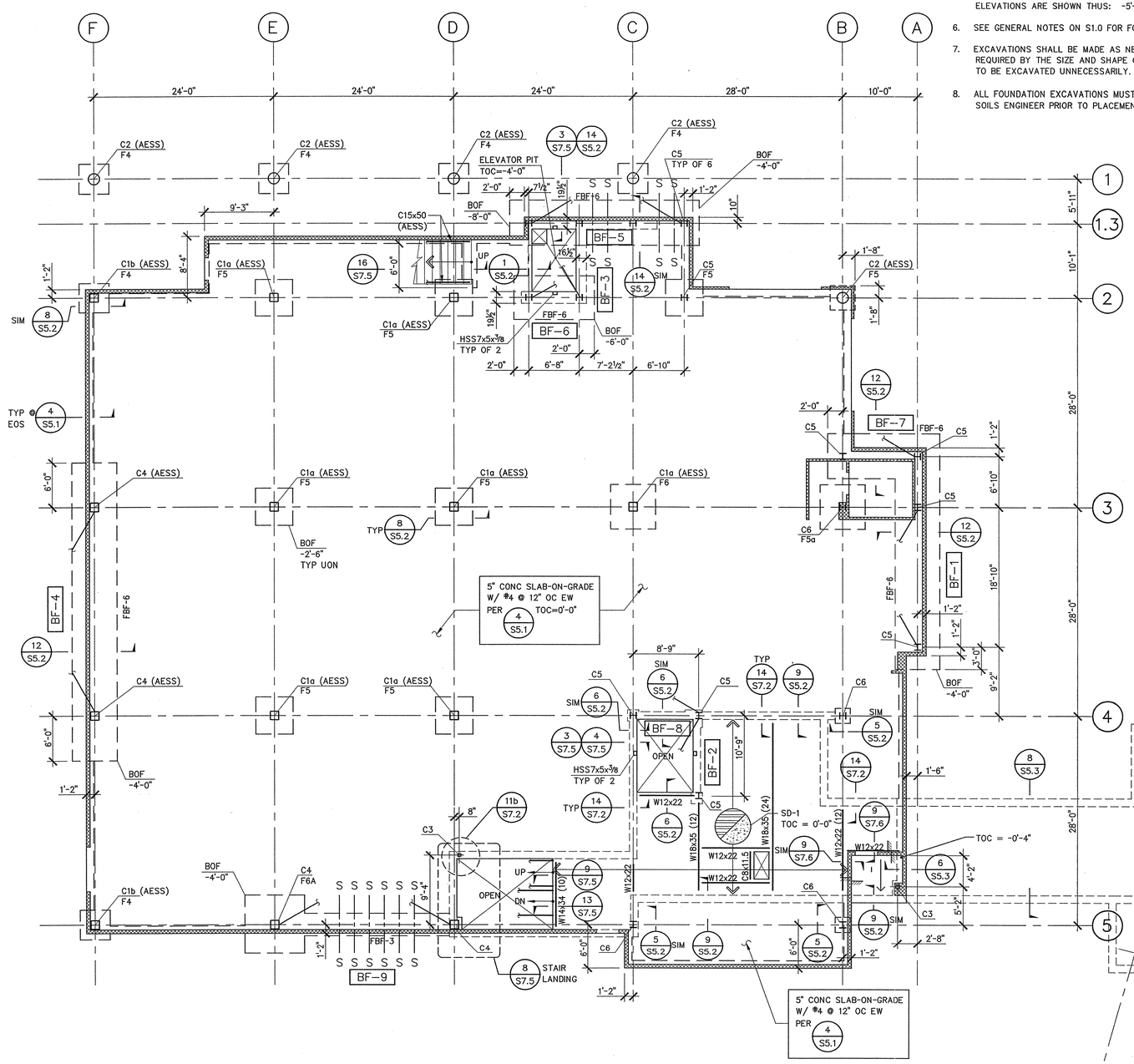

1 FIRST FLOOR FOUNDATION PLAN
1/8"=1'-0"

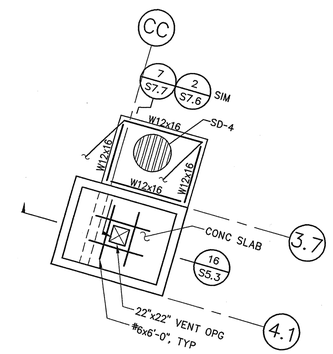

2 ELEVATOR #3 ROOF FRAMING PLAN
1/8"=1'-0"

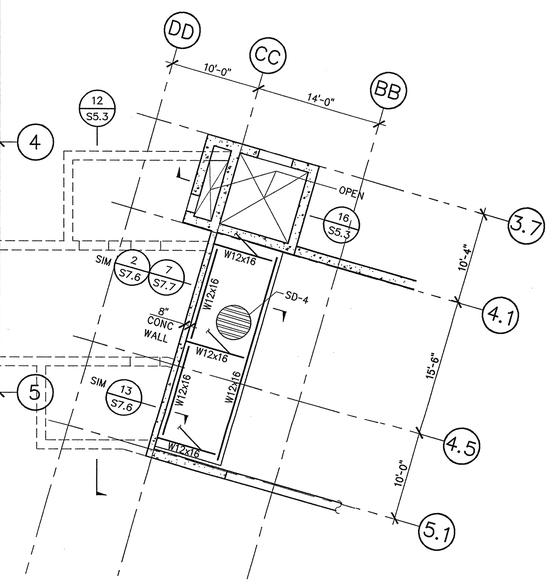

DASSE DESIGN INC.
STRUCTURAL ENGINEERS
33 New Montgomery St., Suite 850
San Francisco CA 94105
415/243-8400 — Fax 415/243-9165

DIABLO VALLEY COLLEGE

DIABLO VALLEY COLLEGE NEW BOOKSTORE

321 GOLF CLUB RD.
PLEASANT HILL, CALIFORNIA

REGISTERED PROFESSIONAL ENGINEER WILLIAM A. ANDREWS 5/7/03 EXP. 3-31-06 STRUCTURAL STATE OF CALIFORNIA

DATE: 23 JULY, 2004

REVISIONS:

BID SET

SHEET TITLE:
FIRST FLOOR FOUNDATION PLAN

IDENTIFICATION STAMP
DIVISION OF THE STATE ARCHITECT
105925
APPL 01
AC — FLS — SS
DATE: 5-12-04 JUL 26 2004

BLDG. ID: 098
ID CODE: 312098-109.01-A

DRAWN BY: LAS
CHECKED BY: SAG
JOB NO: 03B197

SHEET S2.1

FILE: E:\2003 Jobs\03B197\struct\03B197S2Ldwg07/16/04 at 14:50
XREF: E:\2003 Jobs\03B197\struct\03B197GRIDS.dwg XREF: 03B197TB.dwg
XREF: E:\2003 Jobs\03B197\arch\plan-ldwg
XREF: E:\2003 Jobs\03B197\arch\plan-bdwg

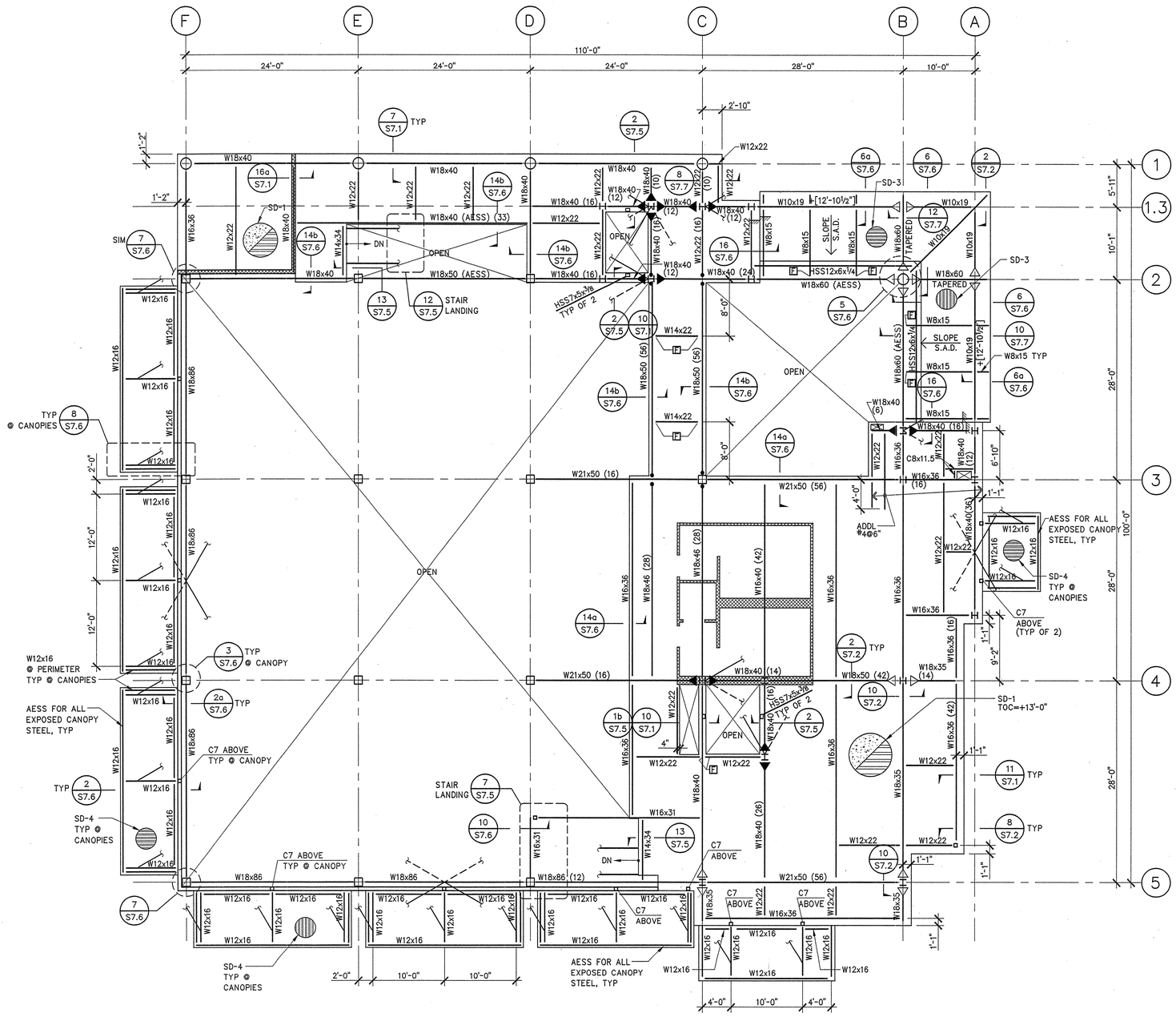

1 **SECOND FLOOR FRAMING PLAN**

1/8"=1'-0"

FLOOR FRAMING NOTES:

1. SEE GENERAL NOTES ON SHEET S1.0.
2. ELEVATION TO TOP OF CONCRETE (TOC) IS GIVEN WITH RESPECT TO NOMINAL FIRST FLOOR ELEVATION +0'-0" AND SHOWN THUS: +13'-0".
3. TOPS OF STEEL BEAMS AND GIRDERS ARE FLUSH AND OCCUR IMMEDIATELY BELOW METAL DECK, UON. ELEVATIONS TO TOP OF STEEL (T.O.S.), WHERE GIVEN, ARE WITH RESPECT TO NOMINAL FIRST FLOOR ELEVATION +[0'-0"] AND SHOWN THUS: T.O.S. EL. +[12'-6¾"].
4. SEE SHEET S7.1 FOR TYPICAL STEEL DECK NOTES AND DETAILS.
5. SEE SHEET S7.2 FOR TYPICAL STEEL FRAMING DETAILS.
6. STEEL DECK DIRECTION IS DENOTED THUS: AND IS PERPENDICULAR TO SUPPORTING FRAMING MEMBERS. SEE DETAIL 3/S7.1 FOR DECK PROPERTIES AND WELDING.
7. BEAMS SHALL BE EQUALLY SPACED IN BAYS UON.
8. SEE DRAWINGS OTHER THAN STRUCTURAL FOR DEPRESSIONS, CURBS, MECHANICAL, ELECTRICAL, AND SHAFT OPENINGS, ETC. GENERAL CONTRACTOR SHALL COORDINATE OPENINGS WITH MECHANICAL AND ELECTRICAL SUBCONTRACTORS.
9. MARKS (15) ETC. DENOTE NUMBER OF SHEAR STUDS AT TOP FLANGE OF THE STEEL BEAM OR GIRDER. SEE NOTES AND DETAILS ON SHEET S7.1.
10. MARKS C1, ETC., DENOTE COLUMN TYPE. SEE COLUMN SCHEDULE, ON SHEET S7.2.
11. MARKS <+2"> DENOTE CAMBER UP AT MIDSPAN OF BEAM.
12. MARKS —→ DENOTE LATERAL BEAM BRACING. SEE DETAIL 4/S7.2.
13. MARKS DENOTE WELDED SHEAR TABS. SEE DETAIL 6/S7.2.
14. AT ALL EXPOSED BEAM CONNECTIONS BOLT HEADS AND SHEAR PLATES SHALL OCCUR ON THE EAST AND NORTH FACING SIDES OF BEAM WEB AS APPLICABLE.
15. MARKS [F] DENOTE FULL DEPTH SHEAR PLATE. SEE DETAIL 2/S7.2.

DASSE DESIGN INC.
STRUCTURAL ENGINEERS
33 New Montgomery St., Suite 850
San Francisco CA 94105
415/243-8400 – Fax 415/243-9165

DIABLO VALLEY COLLEGE

DIABLO VALLEY COLLEGE NEW BOOKSTORE

321 GOLF CLUB RD.
PLEASANT HILL, CALIFORNIA

REGISTERED PROFESSIONAL ENGINEER WILLIAM ANDREWS Exp. 3-31-06 STRUCTURAL STATE OF CALIFORNIA

DATE: 23 JULY, 2004

REVISIONS:

BID SET

FOR PLAN REVIEW ONLY

SHEET TITLE:

SECOND FLOOR FRAMING PLAN

IDENTIFICATION STAMP
DIVISION OF THE STATE ARCHITECT
APPL 01 105925
AC — FLS — SS
DATE: 5-12-04 JUL 26 2004

BLDG. ID: 098
ID CODE: 312098-109.01-A

DRAWN BY: LAS
CHECKED BY: SAG
JOB NO: 03B197

SHEET S2.2

FILE: E:\2003 Jobs\03B197\struct\03B197S2S2.dwg05/10/04 at 1408
XREF: E:\2003 Jobs\03B197\struct\03B197GRIDS.dwg
XREF: E:\2003 Jobs\03B197\arch\plan-2.dwg
XREF: 03B197TB.dwg

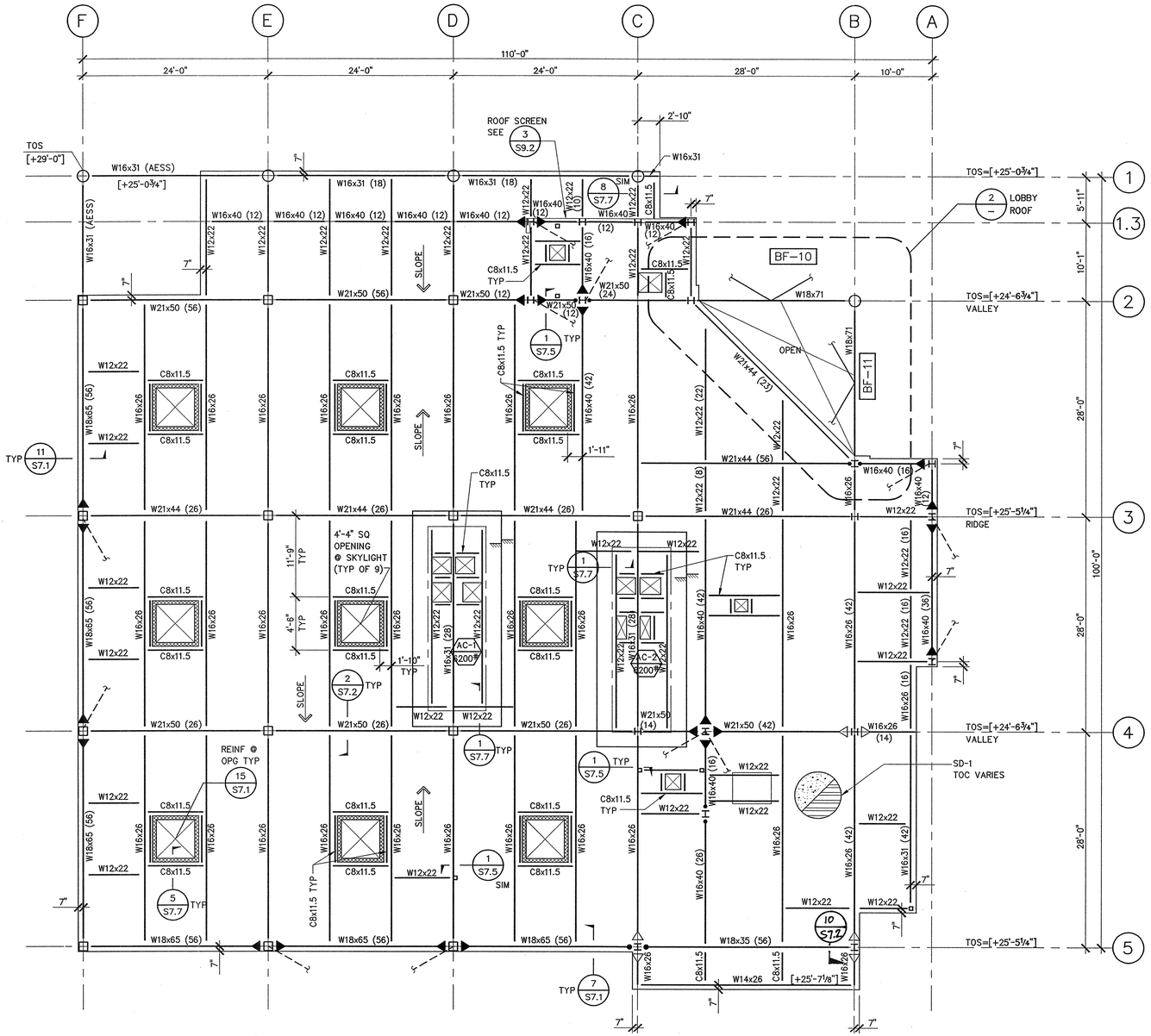

1 ROOF FRAMING PLAN

1/8"=1'-0"

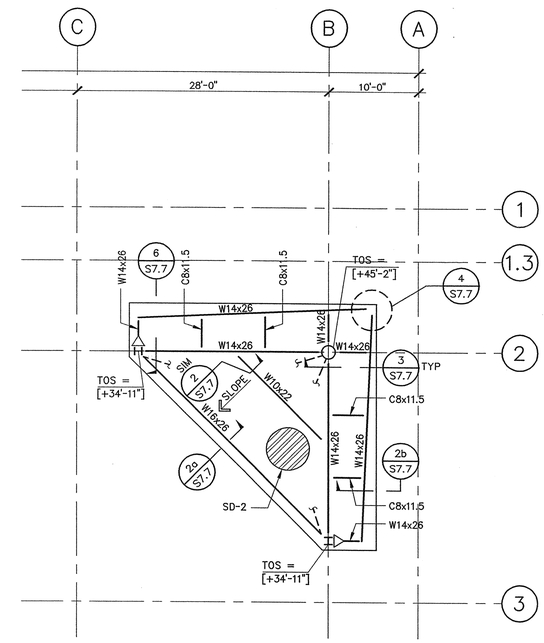

2 LOBBY ROOF FRAMING PLAN

1/8"=1'-0"

ROOF FRAMING NOTES:

1. SEE GENERAL NOTES ON SHEET S1.0.
2. SEE FRAMING NOTES ON SHEET S2.2 FOR INFORMATION NOT NOTED.
3. TOP OF STRUCTURAL CONCRETE SLAB IS AT NOMINAL ROOF LINE. SEE ARCHITECTURAL DRAWINGS FOR ELEVATION OF TOP OF STRUCTURAL CONCRETE SLAB.
4. NOMINAL ROOF LINE VARIES. ELEVATION OF TOPS OF STEEL BEAMS (COLUMNS) ARE SHOWN THUS: [-0'-0"] ON PLAN. ELEVATIONS SO SHOWN ARE GIVEN WITH REFERENCE TO NOMINAL FIRST FLOOR LINE.
5. ALL STEEL BEAMS FRAME FLUSH UNLESS OTHERWISE NOTED.
6. FOR ROOF FILLS, DRAINS, EQUIPMENT, CURBS, ETC., SEE DRAWINGS OTHER THAN STRUCTURAL.
7. ROOF OPENINGS SHOWN ON PLAN ARE NOT COMPLETE AS TO SIZE, NUMBER AND LOCATION. SEE DRAWINGS OTHER THAN STRUCTURAL FOR COMPLETE INFORMATION ON ROOF PENETRATIONS.
8. GENERAL CONTRACTOR SHALL COORDINATE THE LOCATION OF EQUIPMENT SUPPORT BEAMS WITH EQUIPMENT REQUIREMENTS, PRIOR TO SUBMITTAL OF SHOP DRAWINGS.
9. GENERAL CONTRACTOR SHALL COORDINATE OPENINGS WITH MECHANICAL AND ELECTRICAL SUBCONTRACTORS, PRIOR TO SUBMITTAL OF SHOP DRAWINGS.

DASSE DESIGN INC.
STRUCTURAL ENGINEERS
33 New Montgomery St., Suite 850
San Francisco CA 94105
415/243-8400 – Fax 415/243-9165

DIABLO VALLEY COLLEGE

DIABLO VALLEY COLLEGE NEW BOOKSTORE

321 GOLF CLUB RD.
PLEASANT HILL, CALIFORNIA

REGISTERED PROFESSIONAL ENGINEER WILLIAM A. ANDREWS S3793 Exp. 3-31-06 STRUCTURAL STATE OF CALIFORNIA

DATE: 23 JULY, 2004

REVISIONS:

BID SET

FOR PLAN REVIEW ONLY

SHEET TITLE:

ROOF FRAMING PLAN

IDENTIFICATION STAMP
DIVISION OF THE STATE ARCHITECT
105925
APPL 01
AC — FLS — SS
DATE: 5-18-04 JUL 26 2004

BLDG. ID: 098
ID CODE: 312098-109.01-A

DRAWN BY: LAS
CHECKED BY: SAG
JOB NO: 03B197

SHEET S2.3

FILE: E:\2003 Jobs\03B197\struct\03B197S23.dwg05/05/04 at 15:24
XREF: E:\2003 Jobs\03B197\struct\03B197GRIDS.dwg XREF: mech-r.dwg
XREF: E:\2003 Jobs\03B197\arch\plan-r.dwg XREF: 03B197TB.dwg
XREF: E:\2003 Jobs\03B197\arch\plan-2.dwg

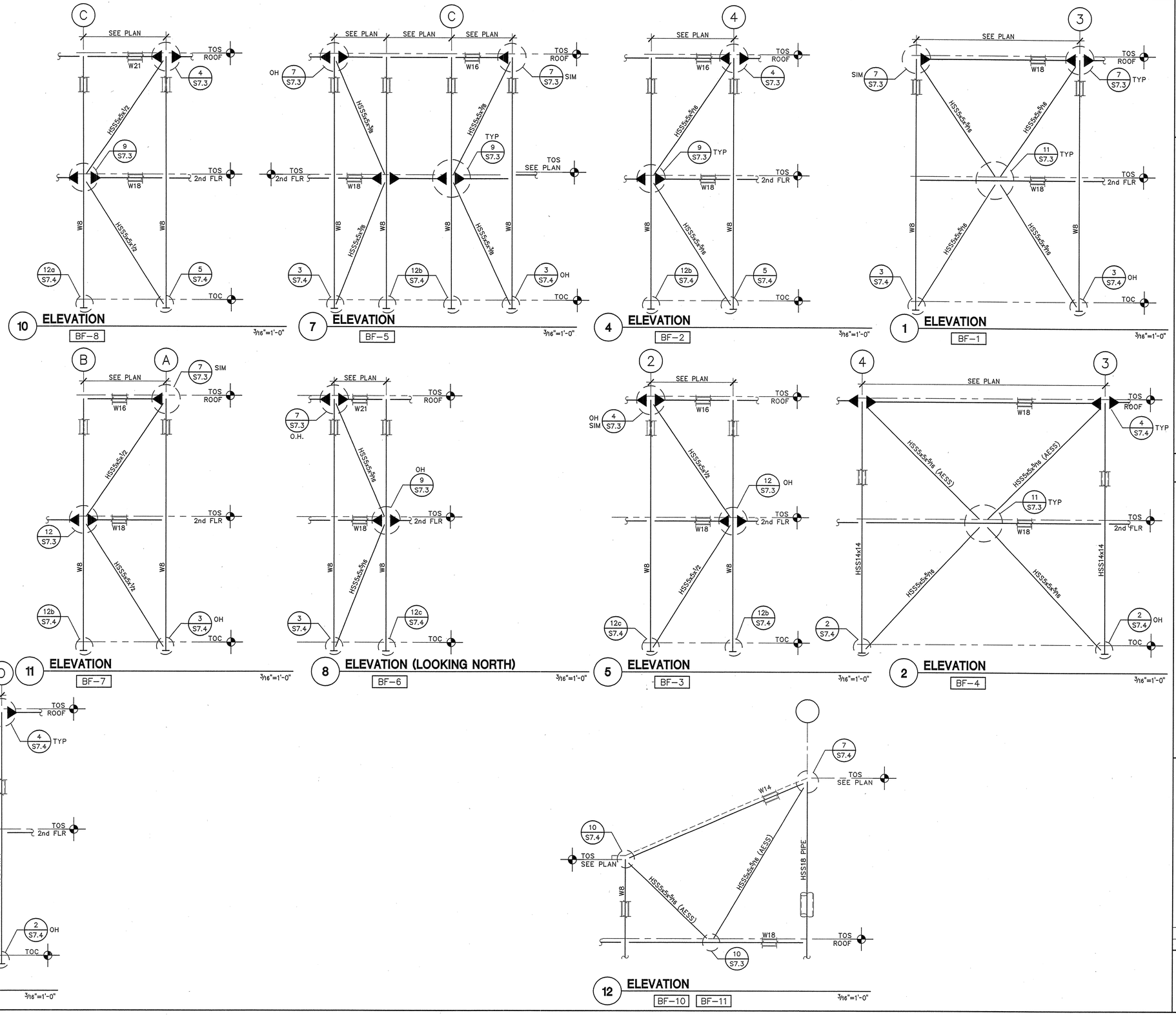

DASSE DESIGN INC.
STRUCTURAL ENGINEERS
33 New Montgomery St., Suite 850
San Francisco CA 94105
415/243-8400 – Fax 415/243-9165

DIABLO VALLEY COLLEGE

DIABLO VALLEY COLLEGE NEW BOOKSTORE

321 GOLF CLUB RD.
PLEASANT HILL, CALIFORNIA

REGISTERED PROFESSIONAL ENGINEER WILLIAM A. ANDREWS Exp. 3-31-06 STRUCTURAL STATE OF CALIFORNIA

DATE: 23 JULY, 2004

REVISIONS:

BID SET

FOR PLAN REVIEW ONLY

SHEET TITLE:
BRACED FRAME ELEVATIONS

IDENTIFICATION STAMP
DIVISION OF THE STATE ARCHITECT
APPL 01 105925
AC ___ FLS ___ SS
DATE: 5-12-04 JUL 26 2004

BLDG. ID: 098
ID CODE: 312098-109.01-A

DRAWN BY: BH
CHECKED BY: SAG
JOB NO: 03B197

SHEET S3.1

FILE: E:\2003 Jobs\03B197\structure\03B197S3.dwg05/10/04 at 14:20
XREF: 03B197Ex.dwg

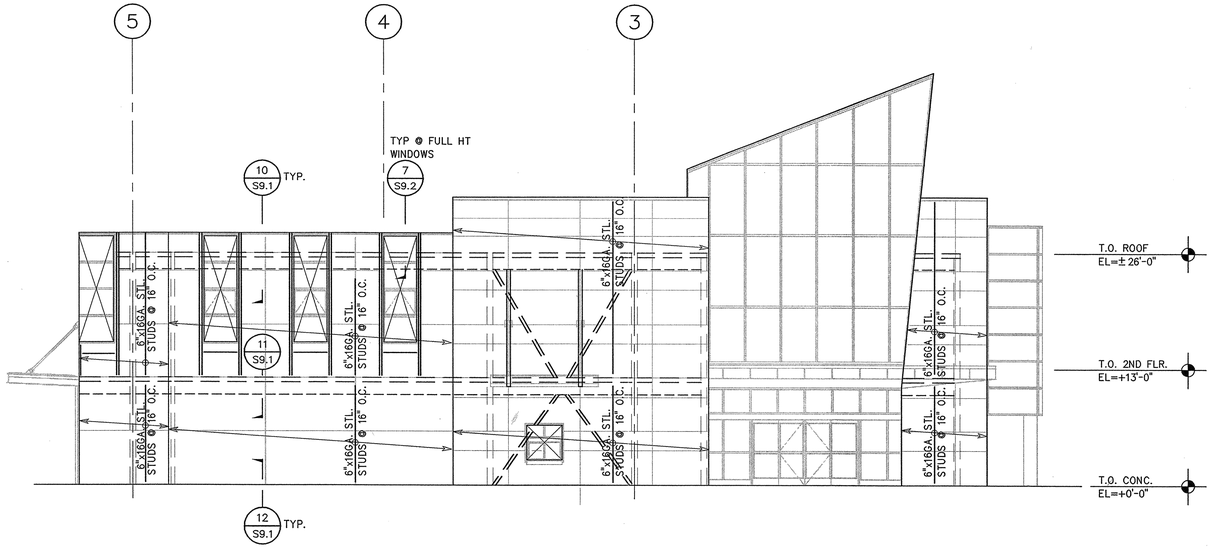

1 EAST EXTERIOR STUD WALL ELEVATION

1/8"=1'-0"

EXTERIOR STUD WALL ELEVATION NOTES:

1. REFER TO STEEL STUD NOTES AND TYPICAL DETAILS ON SHEETS S9.1 AND S9.2.
2. SEE ARCHITECTURAL DRAWINGS FOR ALL OPENING DIMENSIONS AND LOCATIONS AND PARAPET ELEVATIONS.

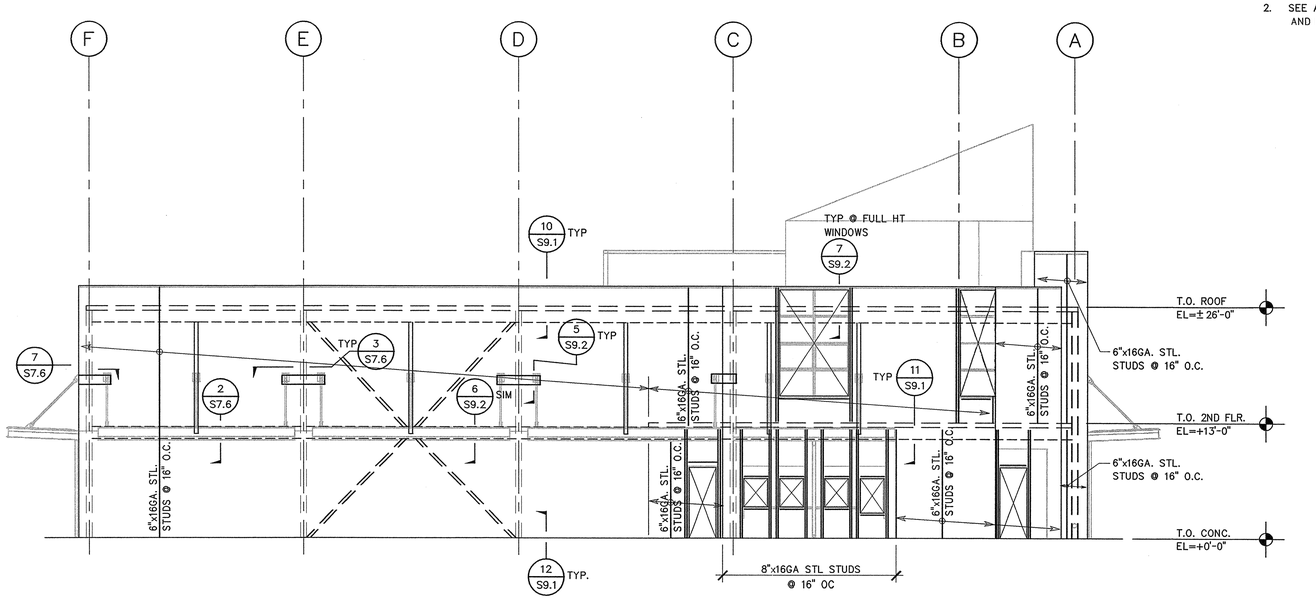

2 SOUTH EXTERIOR STUD WALL ELEVATION

1/8"=1'-0"

DASSE DESIGN INC.
STRUCTURAL ENGINEERS
33 New Montgomery St., Suite 850
San Francisco CA 94105
415/243-8400 – Fax 415/243-9165

DIABLO VALLEY COLLEGE

DIABLO VALLEY COLLEGE NEW BOOKSTORE

321 GOLF CLUB RD.
PLEASANT HILL, CALIFORNIA

REGISTERED PROFESSIONAL ENGINEER WILLIAM A. ANDREWS III Exp. 3-31-06 STRUCTURAL STATE OF CALIFORNIA

DATE: 23 July, 2004

REVISIONS:

BID SET

FOR PLAN REVIEW ONLY

SHEET TITLE:

ELEVATIONS

IDENTIFICATION STAMP
DIVISION OF THE STATE ARCHITECT
105925
APPL 01
AC ___ FLS ___ SS ___
DATE: 5-12-04 JUL 26 2004

BLDG. ID: 098
ID CODE: 312098-109.01-A

DRAWN BY: FH
CHECKED BY: SAG
JOB NO: 03B197

SHEET S3.2

FILE: E:\2003 Jobs\03B197\struct\03B197S32.dwg05/03/04 at 13:51
XREF: E:\2003 Jobs\03B197\struct\03B197TB.dwg
XREF: E:\2003 Jobs\03B197\struct\03B197A ELEV2.dwg

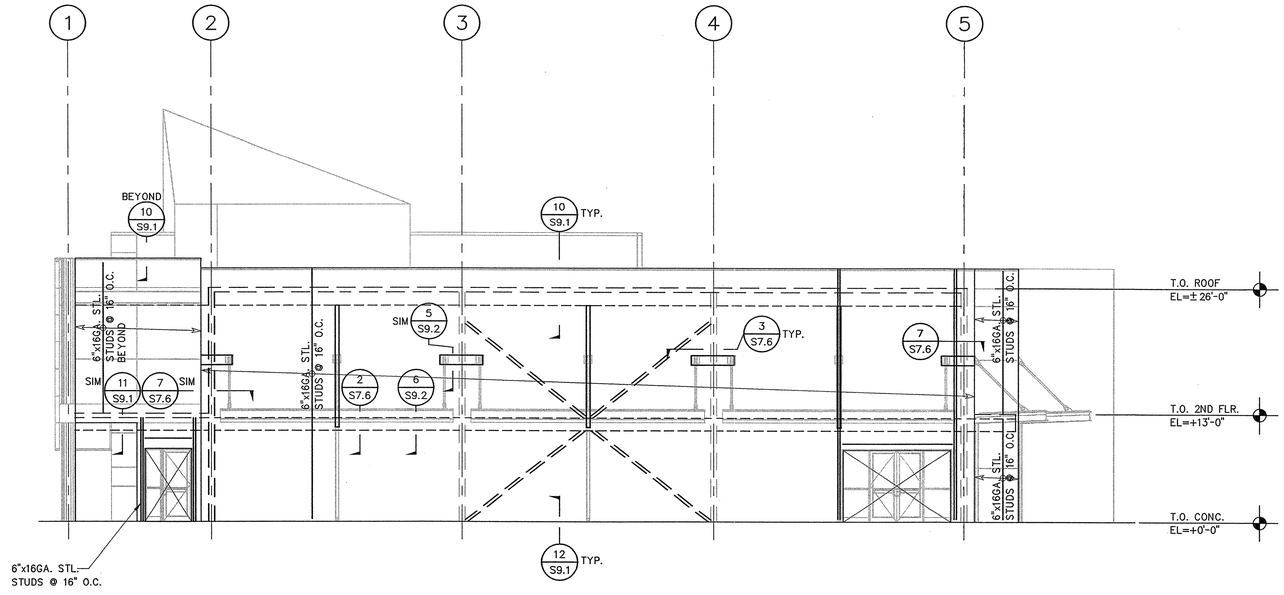

1 WEST EXTERIOR STUD WALL ELEVATION

1/8"=1'-0"

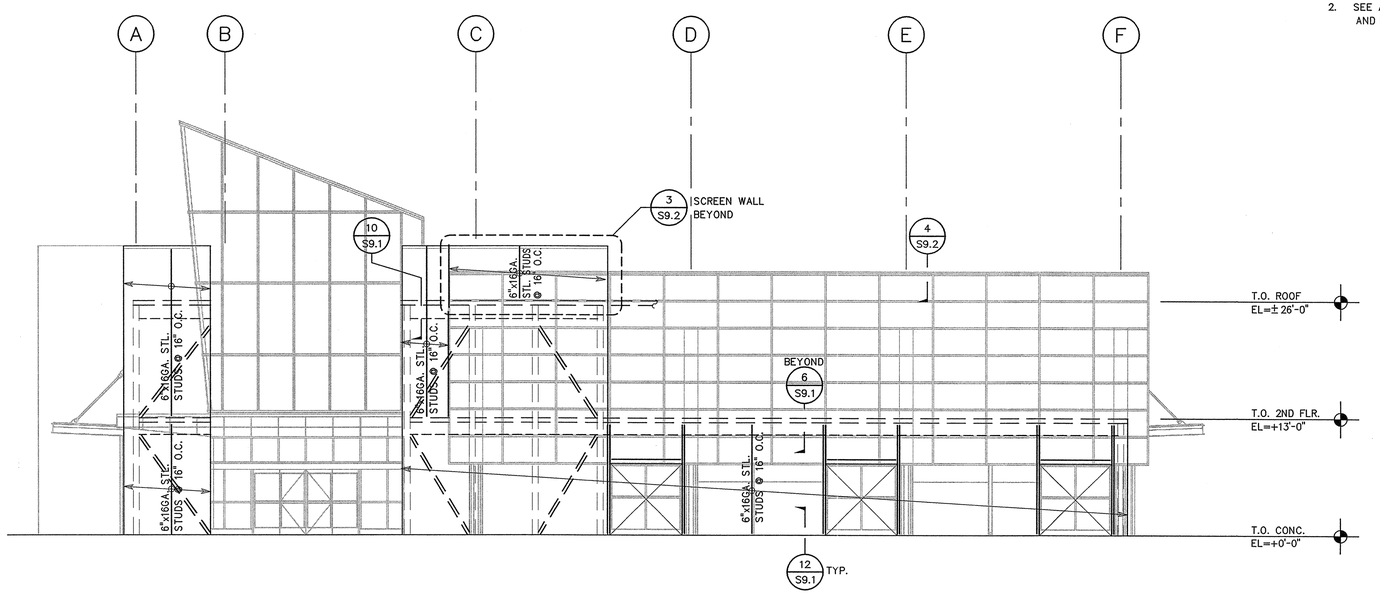

2 NORTH EXTERIOR STUD WALL ELEVATION

1/8"=1'-0"

EXTERIOR STUD WALL ELEVATION NOTES:

1. REFER TO STEEL STUD NOTES AND TYPICAL DETAILS ON SHEETS S9.1 AND S9.2.
2. SEE ARCHITECTURAL DRAWINGS FOR ALL OPENING DIMENSIONS AND LOCATIONS AND PARAPET ELEVATIONS.

DASSE DESIGN INC.
STRUCTURAL ENGINEERS
33 New Montgomery St., Suite 850
San Francisco CA 94105
415/243-8400 — Fax 415/243-9165

DIABLO VALLEY COLLEGE

DIABLO VALLEY COLLEGE
NEW BOOKSTORE

321 GOLF CLUB RD.
PLEASANT HILL, CALIFORNIA

REGISTERED PROFESSIONAL ENGINEER
WILLIAM A. ANDREWS
S 3795
Exp. 3-31-06
STRUCTURAL
STATE OF CALIFORNIA

DATE: 23 July, 2004

REVISIONS:

BID SET

FOR PLAN REVIEW ONLY

SHEET TITLE:

ELEVATIONS

IDENTIFICATION STAMP
DIVISION OF THE STATE ARCHITECT
105925
APPL 01
AC ___ FLS ___ SS ___
DATE: 5-12-04 JUL 26 2004

BLDG. ID: 098
ID CODE: 312098-109.01-A

DRAWN BY: FH
CHECKED BY: SAG
JOB NO: 03B197

SHEET
S3.3

FILE: E:\2003 Jobs\03B197\struct\03B197S33.dwg05/03/04 at 1408
XREF: E:\2003 Jobs\03B197\struct\03B197TB.dwg

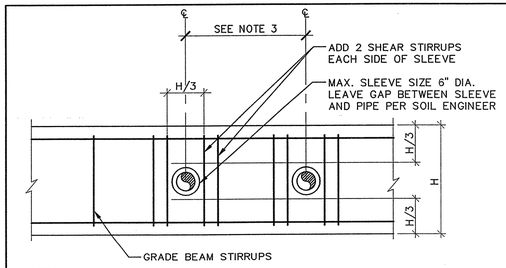

NOTES:
1. DO NOT CUT REINFORCING.
2. SLEEVE TO BE PLACED IN MIDDLE THIRD OF BEAM DEPTH.
3. MINIMUM DISTANCE BETWEEN SLEEVES SHALL BE 4X LARGEST SLEEVE DIAMETER.
4. PROVIDE MIN. 2" CLR BETWEEN SLEEVE AND REINFORCING.

13 SLEEVE THRU GRADE BEAM

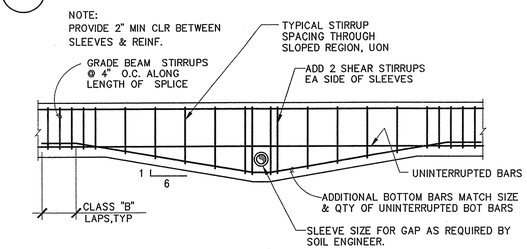

(a) SLEEVES OCCUR BELOW BOTTOM REINF

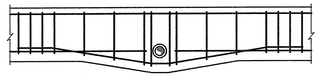

FOR INFO NOT NOTED, SEE (a)

(b) SLEEVES INTERRUPT BOTTOM REINF

NOTES:
1. FOR SLEEVES IN MIDDLE THIRD OF GRADE BEAM, SEE 13/-.
2. FOR PIPES BELOW GRADE BEAMS, SEE 11/-.

14 SLEEVE THRU GRADE BEAM AT BOTTOM REINFORCING

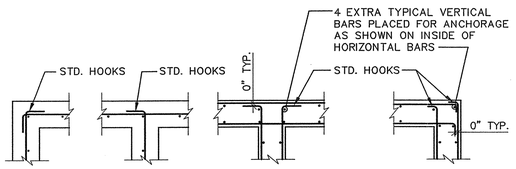

15 CONCRETE WALL AND FOOTING INTERSECTIONS

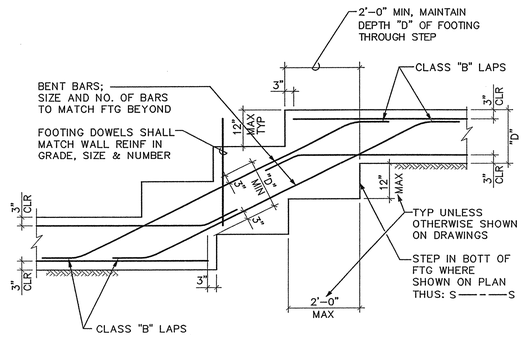

16 STEPS IN CONTINUOUS FOOTING

NOTES:
1. SEE REBAR LAP SPLICES AND INDIVIDUAL DETAILS FOR INFORMATION NOT NOTED.
2. SEE SPECIFICATIONS FOR JOINT ROUGHENING REQUIREMENTS.

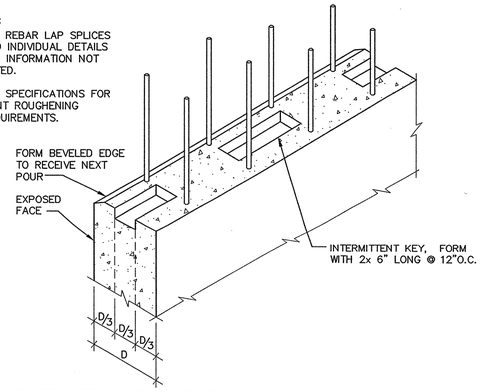

9 HORIZONTAL CONSTRUCTION JOINT IN CONCRETE WALL

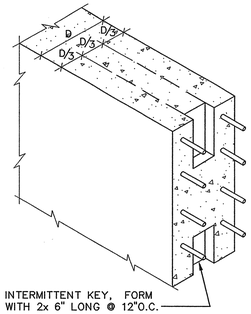

NOTES:
1. SEE REBAR LAP SPLICES AND INDIVIDUAL DETAILS FOR INFORMATION NOT NOTED.
2. SEE SPECIFICATIONS FOR JOINT ROUGHENING REQUIREMENTS.

10 VERTICAL CONSTRUCTION JOINT IN CONCRETE WALL

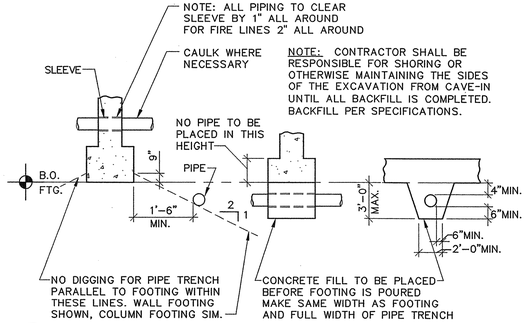

11 PIPE CLEARANCES AT FOOTINGS

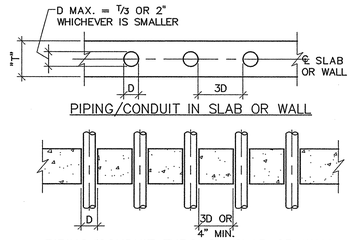

NOTE:
1. IF 4" MINIMUM CLEAR DISTANCE BETWEEN SLEEVES IS NOT POSSIBLE, THIS CONDITION SHALL BE TREATED AS A SLAB OPENING PER TYPICAL DETAIL "REINFORCING AROUND STRUCTURAL SLAB OPENINGS".

12 PIPING AND CONDUIT IN OR THROUGH SLAB OR WALL

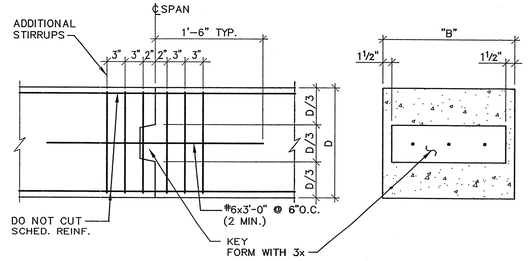

5 BEAMS AND GRADE BEAMS CONSTRUCTION JOINTS

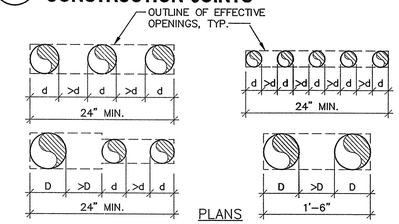

NOTES:
1. ALL ABOVE CONDITIONS REQUIRE 1–#5 TOP AND BOTTOM TRIM BARS ALL AROUND THE EFFECTIVE OPENING WITH 1'–6" MINIMUM EXTENSION PAST THE OPENING EDGE. DIAGONAL BARS ARE NOT REQUIRED.
2. THIS DETAIL APPLIES WHERE SPACING OF OPENINGS IS LESS THAN 3 DIAMETERS.

6 MULTIPLE ROUND SLAB OPENINGS

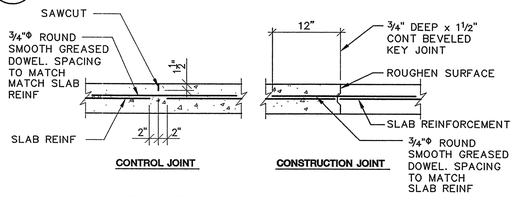

JOINTS SHALL NOT BE LOCATED FURTHER THAN 15'-0" OC. LOCATE EITHER CONTROL OR CONSTRUCTION JOINTS TO ENCLOSE APPROX AREAS NOT EXCEEDING 230 SQ FT. ADDITIONALLY ASPECT RATIO SHALL NOT EXCEED 1.5. SUBMIT LAYOUT FOR APPROVAL. LOCATE UNDER PARTITION WHEREVER POSSIBLE.
LOCATE GREASED DOWELS 1'-6" FROM CONSTRUCTION AND CONTROL JOINT INTERSECTIONS. GREASE ONE SIDE OF GREASED DOWEL.

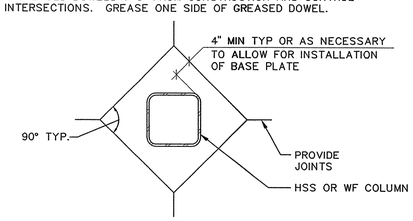

PLAN VIEW AT COLUMN

7 SLAB-ON-GRADE CONSTRUCTION AND CONTROL JOINTS

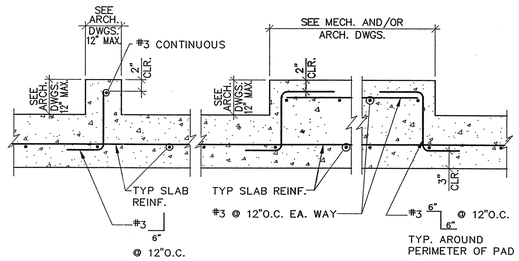

8 TYPICAL CURB AND RAISED PAD DETAILS

BAR SIZE	MAIN REINFORCEMENT: 90° HOOK LENGTH "L"	INSIDE DIA. "D1"	180° HOOK LENGTH "L"	STIRRUPS & TIES: 90° HOOK LENGTH "L"	INSIDE DIA. "D2"	135° HOOK LENGTH "L"
#3	4½"	2¼"	2½"	3"	1½"	3"
#4	6"	3"	2½"	3"	2"	3"
#5	7½"	3¾"	2½"	3¾"	2½"	3¾"
#6	9"	4½"	3"	9"	4½"	4½"
#7	10½"	5¼"	3½"	10½"	5¼"	5¼"
#8	1'-0"	6"	4"	1'-0"	6"	6"
#9	1'-1½"	9½"	4½"	–	–	–
#10	1'-3¼"	10¾"	5¼"	–	–	–
#11	1'-5"	1'-0"	5¾"	–	–	–

1 STANDARD HOOKS

CONCRETE STRENGTH	F'c = 3000 PSI				F'c = 4000 PSI			
CLASS OF LAP SPLICE	CLASS "A"		CLASS "B"		CLASS "A"		CLASS "B"	
BAR SIZE \ CASE	TOP BARS	OTHER BARS	TOP BARS	OTHER BARS	TOP BARS	OTHER BARS	TOP BARS	OTHER BARS
#3	1'-10"	1'-5"	2'-4"	1'-10"	1'-7"	1'-3"	2'-0"	1'-7"
#4	2'-5"	1'-10"	3'-1"	2'-5"	2'-1"	1'-7"	2'-8"	2'-1"
#5	3'-0"	2'-4"	3'-11"	3'-0"	2'-7"	2'-0"	3'-4"	2'-7"
#6	3'-7"	2'-9"	4'-8"	3'-7"	3'-1"	2'-5"	4'-0"	3'-1"
#7	5'-3"	4'-0"	6'-9"	5'-2"	4'-8"	3'-6"	5'-11"	4'-6"
#8	6'-0"	4'-7"	7'-9"	5'-11"	5'-2"	4'-0"	6'-9"	5'-2"
#9	6'-9"	5'-2"	8'-9"	6'-9"	5'-10"	4'-6"	7'-7"	5'-10"

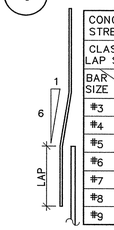

NOTES:
1. UNLESS INDICATED OTHERWISE, USE THE CLASS "B" LAP SPLICE LENGTHS, MULTIPLIED BY THE APPLICABLE FACTOR(S) LISTED BELOW.
2. WHERE CLEAR SPACE BETWEEN BARS LAP SPLICED AT ANY SECTION IS LESS THAN 2 BAR DIAMETERS, OR WHERE THE BAR COVER IS LESS THAN OR EQUAL TO THE BAR DIAMETER, INCREASE THE LAP LENGTH BY 50%
3. A CLASS "A" SPLICE MAY BE USED ONLY WHERE NOTED ON THE DRAWINGS.
4. TOP BARS ARE HORIZONTAL BARS WITH MORE THAN 12 INCHES OF CONCRETE CAST BELOW THE BARS.
5. WHERE LIGHTWEIGHT AGGREGATE CONCRETE IS USED, INCREASE LAP SPLICE LENGTH BY 30%.
6. SPLICES OF HORIZONTAL REINFORCEMENT IN WALLS SHALL BE STAGGERED.
7. SPLICES OF HORIZONTAL REINFORCEMENT IN WALLS CONTAINING TWO CURTAINS OF REINFORCEMENT SHALL NOT OCCUR IN THE SAME LOCATION.

2 REBAR OFFSET AND LAP SPLICE

N.T.S.

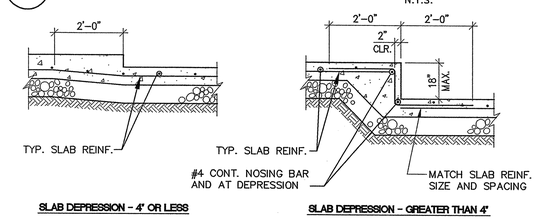

SEE DETAIL (4/–) FOR DETAILS NOT SHOWN OR NOTED

3 SLAB-ON-GRADE DEPRESSION

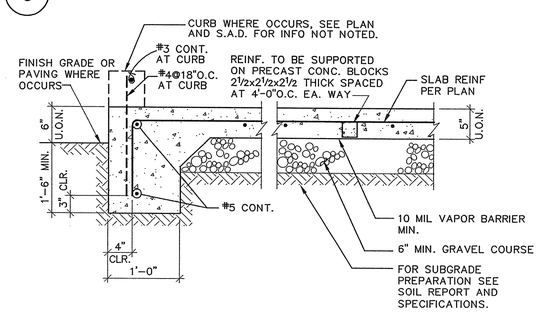

4 SLAB-ON-GRADE DETAILS

DASSE DESIGN INC.
STRUCTURAL ENGINEERS
33 New Montgomery St., Suite 850
San Francisco CA 94105
415/243-8400 – Fax 415/243-9165

DIABLO VALLEY COLLEGE

DIABLO VALLEY COLLEGE NEW BOOKSTORE

321 GOLF CLUB RD.
PLEASANT HILL, CALIFORNIA

REGISTERED PROFESSIONAL ENGINEER WILLIAM A. ANDREWS No. 3973 Exp. 3-31-06 STRUCTURAL STATE OF CALIFORNIA

DATE: 23 JULY, 2004

REVISIONS:

BID SET

SHEET TITLE:
TYPICAL CONCRETE DETAILS

IDENTIFICATION STAMP
DIVISION OF THE STATE ARCHITECT
105925
APPL 01
AC — FLS — SS #1
DATE: 5-12-04 JUL 26 2004

BLDG. ID: 098
ID CODE: 312098-109.01-A

DRAWN BY: LAS
CHECKED BY: SAG
JOB NO: 03B197

SHEET S5.1

FILE: E:\2003 Jobs\03B197\structure\03B197S5.dwg07/16/04 at 14:55
XREF: 03B197T.dwg

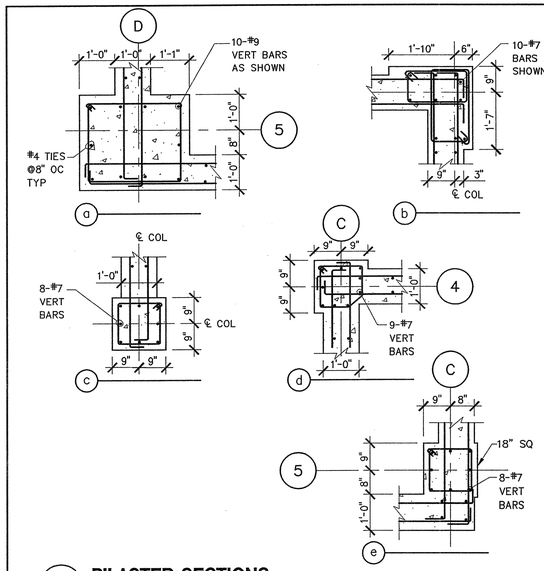

13 PILASTER SECTIONS

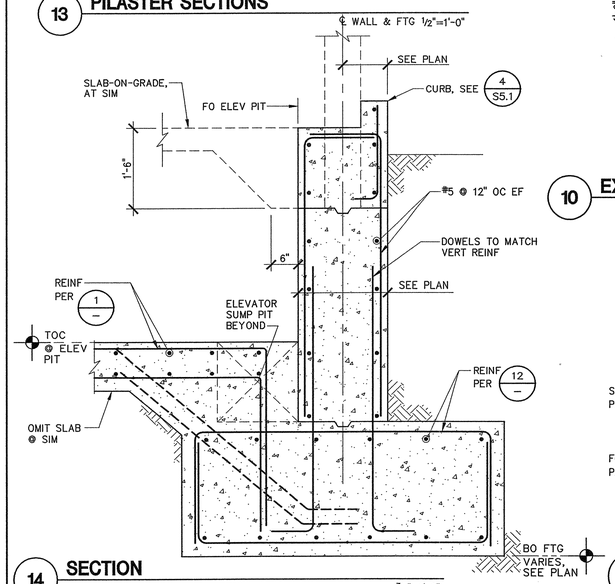

14 SECTION

3/4"=1'-0"

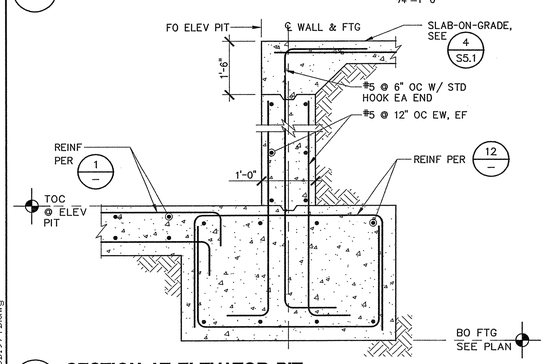

15 SECTION AT ELEVATOR PIT

3/4"=1'-0"

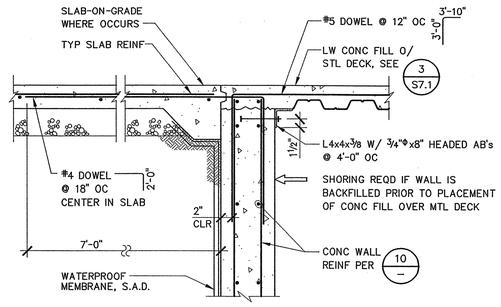

9 SECTION AT SLAB/WALL INTERFACE

3/4"=1'-0"

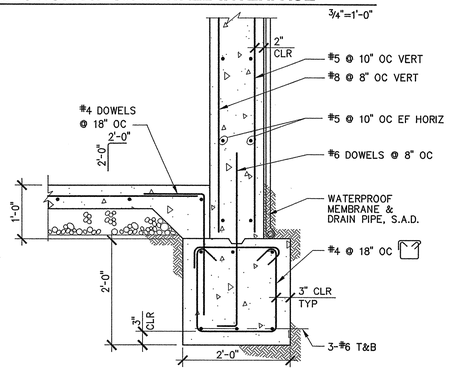

10 EXTERIOR CONCRETE WALL FOOTING

3/4"=1'-0"

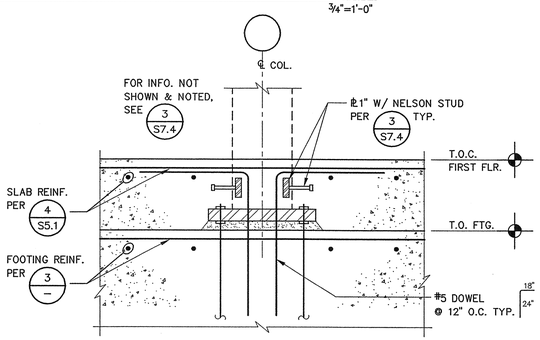

11 DETAIL

NTS

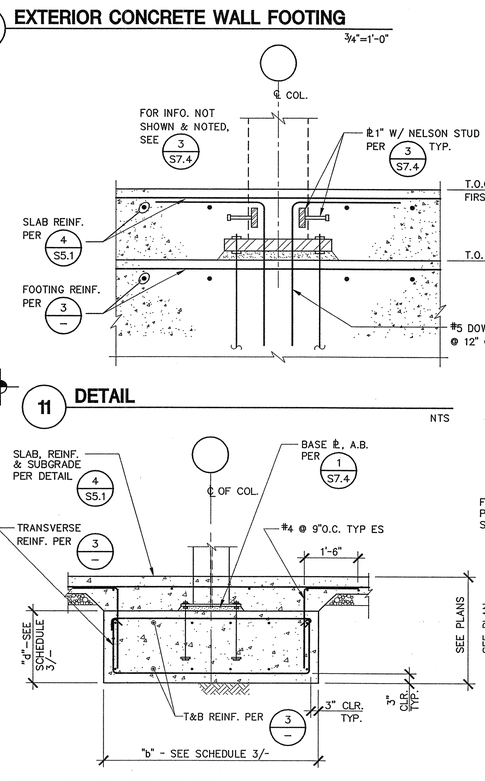

12 BRACED FRAME FOOTING

1/2"=1'-0"

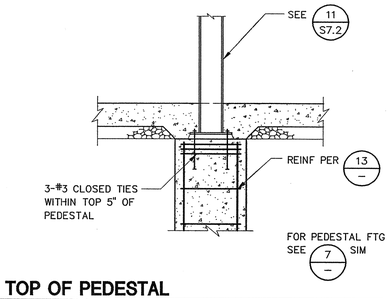

5 TOP OF PEDESTAL

1/2"=1'-0"

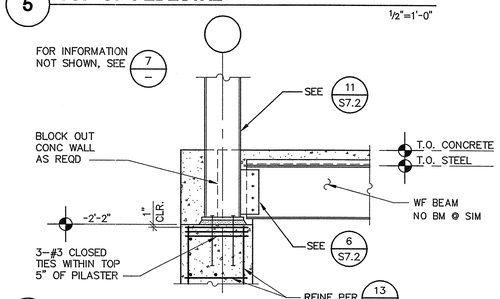

6 TOP OF PILASTER DETAIL

1/2"=1'-0"

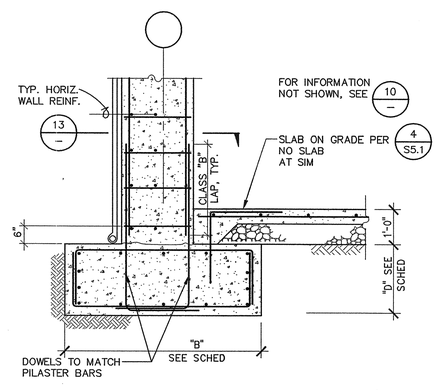

7 SECTION AT BASE OF PILASTER

1/2"=1'-0"

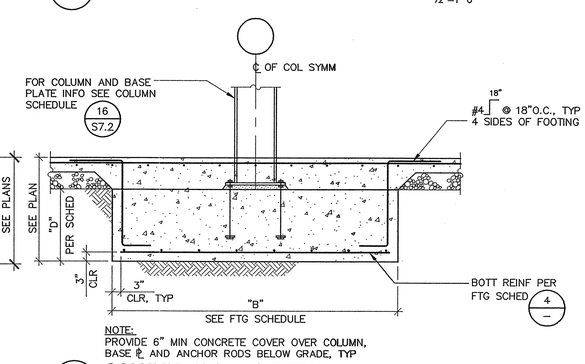

NOTE:
PROVIDE 6" MIN CONCRETE COVER OVER COLUMN, BASE ℄ AND ANCHOR RODS BELOW GRADE, TYP

8 COLUMN FOOTING DETAIL

1/2"=1'-0"

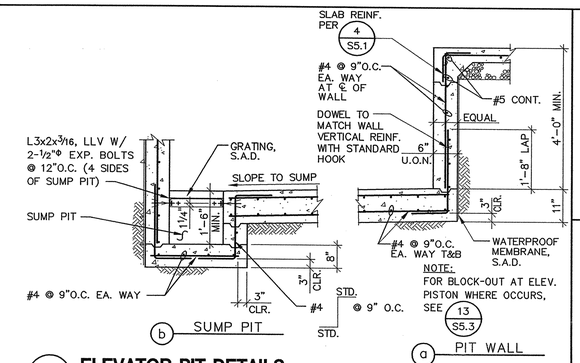

1 ELEVATOR PIT DETAILS

1/2"=1'-0"

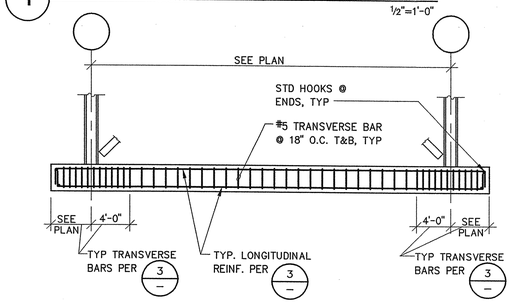

2 BRACED FRAME FOOTING REINFORCING

N.T.S.

BRACED FRAME FOOTING SCHEDULE

MARK	"d"	"b"	LONG. REINF.	TRANSVERSE REINF BAR SIZE	TRANSVERSE REINF SPACING	REF. DETAIL
FBF-6	2'-6"	6'-0"	6-#9 T&B	#5	6"	12
FBF-3	2'-6"	3'-0"	4-#8 T&B	#5	6"	12

NOTES:

1. SPLICE FOR LONGITUDINAL GRADE BEAM REINFORCEMENT SHALL BE LOCATED IN MIDDLE 1/3 OF SPAN PER 2
2. PIPE SLEEVES SHALL BE PROVIDED PER 13 S5.1 AND 14 S5.1 SLEEVES SHALL NOT BE LOCATED AT SAME SPAN AS LONGITUDINAL SPLICE. SEE DRAWINGS OTHER THAN STRUCTURAL FOR PIPE LOCATIONS.
3. KEY FOR CONSTRUCTION JOINTS PER 5 S5.1

3 BRACED FRAME FOOTING

N.T.S.

COLUMN FOOTING SCHEDULE

MARK	"D"	"B"	REINF.	REF. DETAIL
F4	1'-6"	4'-0" SQ	5-#5 EW	8
F5	1'-6"	5'-0" SQ	6-#5 EW	8
F5a	3'-0"	5'-0" SQ	6-#5 EW T&B	8
F6	1'-6"	6'-0" SQ	6-#7 EW	8
F6a	2'-6"	6'-0" SQ	6-#7 EW T&B	12

4 COLUMN FOOTING SCHEDULE

N.T.S.

DASSE DESIGN INC.
STRUCTURAL ENGINEERS
33 New Montgomery St., Suite 850
San Francisco CA 94105
415/243-8400 — Fax 415/243-9165

DIABLO VALLEY COLLEGE

DIABLO VALLEY COLLEGE NEW BOOKSTORE

321 GOLF CLUB RD.
PLEASANT HILL, CALIFORNIA

REGISTERED PROFESSIONAL ENGINEER WILLIAM A. ANDREWS S 3723 Exp. 3-31-06 STRUCTURAL STATE OF CALIFORNIA

DATE: 23 JULY, 2004

REVISIONS:

BID SET

SHEET TITLE:
CONCRETE DETAILS

IDENTIFICATION STAMP
DIVISION OF THE STATE ARCHITECT
105925
APPL 01
AC — FLS — SS A1
DATE: 5-12-04 JUL 26 2004

BLDG. ID: 098
ID CODE: 312098-109.01-A

DRAWN BY: LAS
CHECKED BY: SAG
JOB NO: 03B197

SHEET S5.2

FILE: E:\2003 Jobs\03B197\struct\03B197S52.dwg 07/16/04 at 14:58
XREF: 03B197TB.dwg

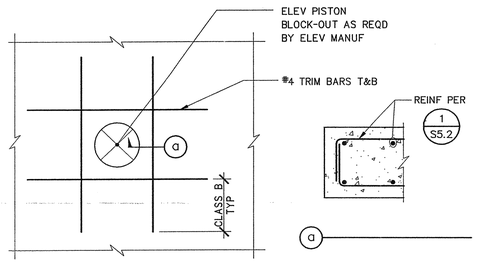

13 ELEVATOR PISTON BLOCK-OUT DETAIL

3/4"=1'-0"

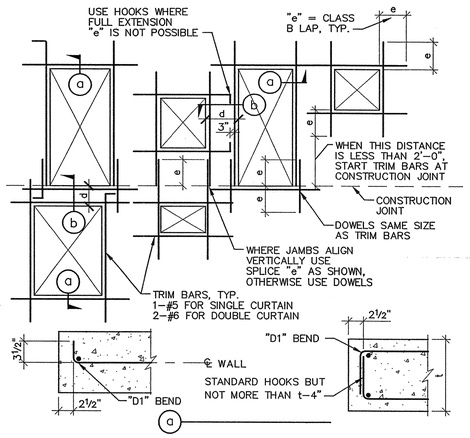

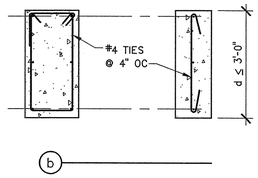

10 TYPICAL CONCRETE WALL OPENING TRIM REINFORCEMENT

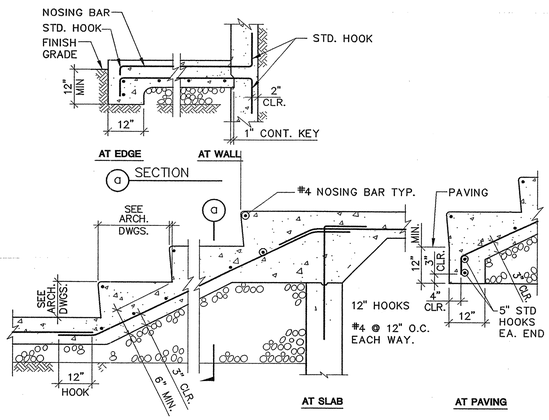

5 STAIR-ON-GRADE

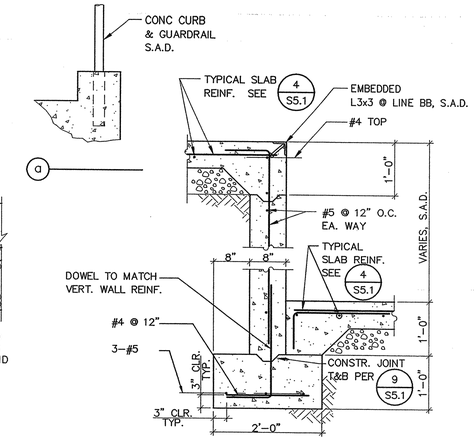

1 RETAINING WALL AT LOADING DOCK

3/4"=1'-0"

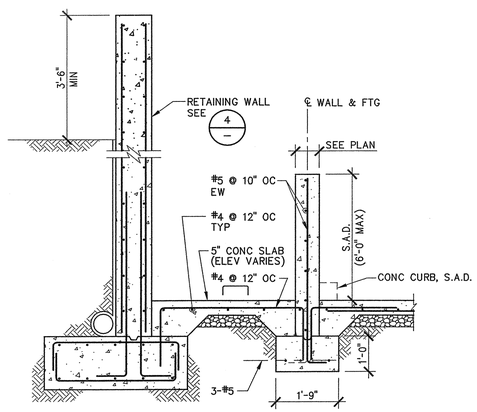

14 SECTION AT RAMP

1/2"=1'-0"

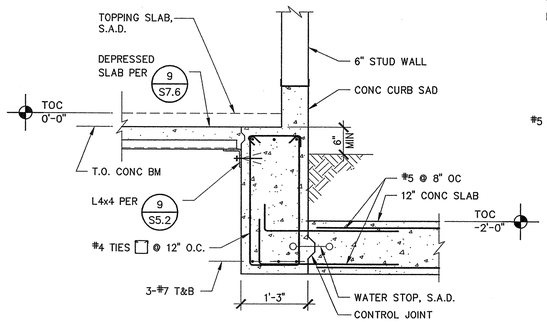

6 TUNNEL DETAIL

3/4"=1'-0"

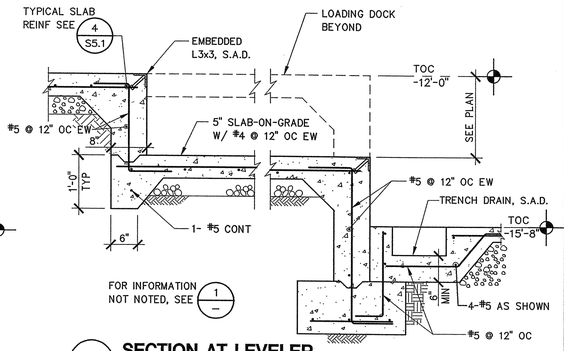

2 SECTION AT LEVELER

3/4"=1'-0"

RETAINING WALL SCHEDULE

H	T	A	B	C	D	"X" BARS	"Y" BARS
TO 3'-0"	12"	12"	1'-0"	2'-0"	1'-3"	#5 @ 10"	#5 @ 16"
3'-1" TO 6'-0"	12"	12"	1'-6"	2'-0"	3'-0"	#5 @ 10"	#5 @ 16"
6'-1" TO 10'-0"	12"	12"	1'-6"	3'-0"	4'-6"	#7 @ 8"	#6 @ 12"
10'-0" TO 14'-0"	12"	16"	1'-6"	4'-6"	5'-3"	#8 @ 6"	#8 @ 12"

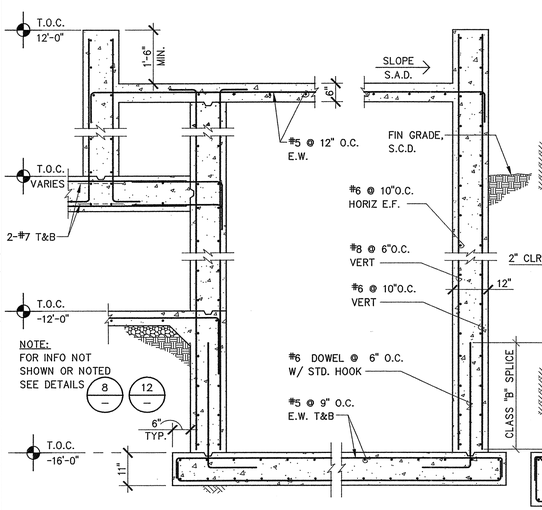

16 SECTION AT LOADING DOCK ELEVATOR

1/2"=1'-0"

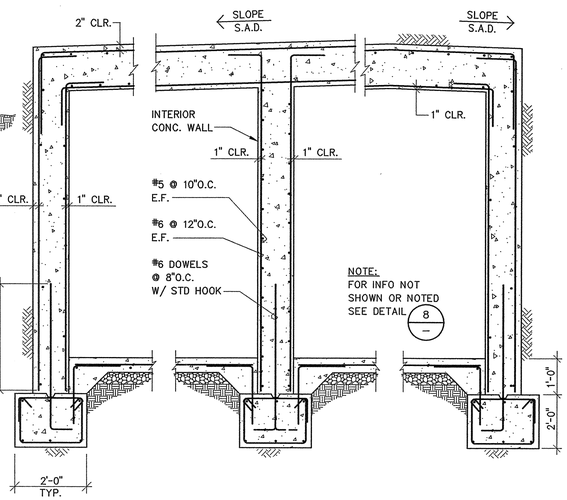

12 SECTION

1/2"=1'-0"

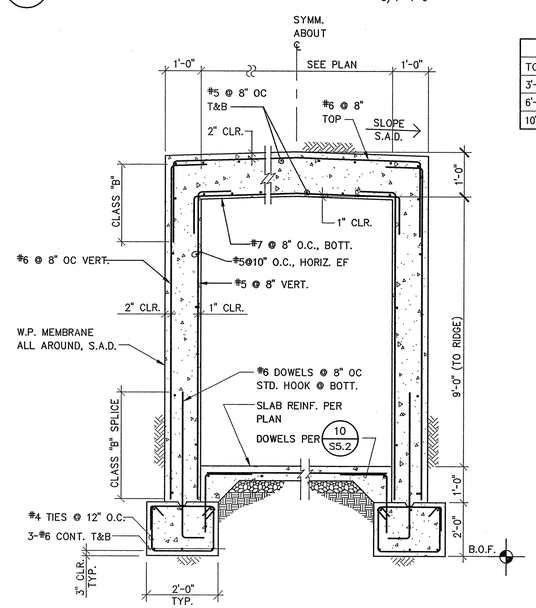

8 TUNNEL SECTION

1/2"=1'-0"

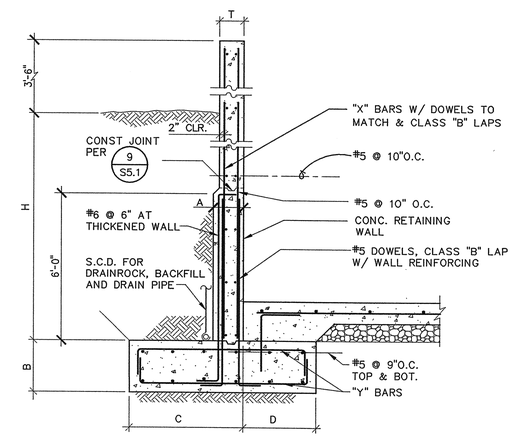

4 CONCRETE SITE RETAINING WALL AND SCHEDULE

NTS

DASSE DESIGN INC.
STRUCTURAL ENGINEERS
33 New Montgomery St., Suite 850
San Francisco CA 94105
415/243-8400 — Fax 415/243-9165

DIABLO VALLEY COLLEGE

DIABLO VALLEY COLLEGE NEW BOOKSTORE

321 GOLF CLUB RD.
PLEASANT HILL, CALIFORNIA

REGISTERED PROFESSIONAL ENGINEER WILLIAM A. ANDREWS Exp. 3-31-06 STRUCTURAL STATE OF CALIFORNIA

DATE: 23 JULY, 2004

REVISIONS:

BID SET

SHEET TITLE:
CONCRETE DETAILS

IDENTIFICATION STAMP
DIVISION OF THE STATE ARCHITECT
105925
APPL 01
AC — FLS — SS
DATE: 5-12-04 JUL 26 2004

BLDG. ID: 098
ID CODE: 312098-109.01-A

DRAWN BY: BH
CHECKED BY: SAG
JOB NO: 03B197

SHEET S5.3

FILE: E:\2003 Jobs\03B197\struct\03B197S53.dwg07/16/04 at 14:59
XREF: 03B197TB.dwg

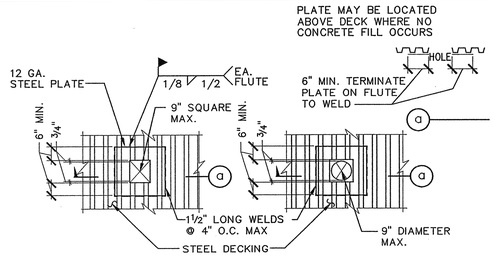

SQUARE OR RECTANGULAR HOLES ROUND HOLES

SMALL OPENING

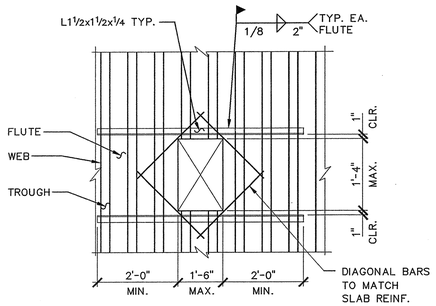

PLAN

MEDIUM OPENING

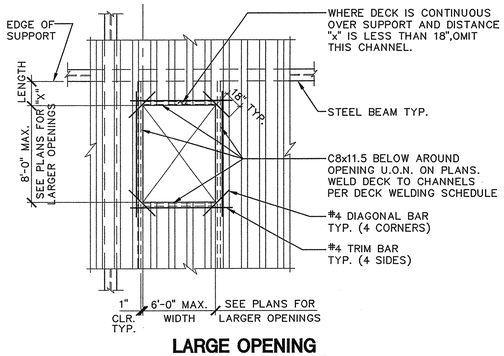

LARGE OPENING

15 OPENING IN STEEL DECK

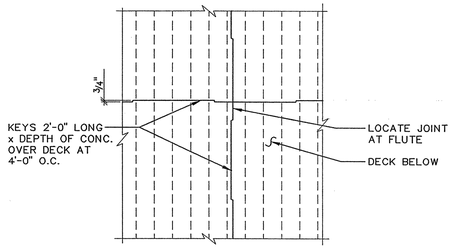

SLAB REINF. CONT. THRU JOINT U.O.N.

9 CONSTRUCTION JOINT AT CONCRETE FILL OVER STEEL DECK

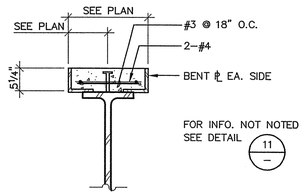

10 EDGE OF SLAB BETWEEN SHAFTS AND AT EXTERIOR STAIRS

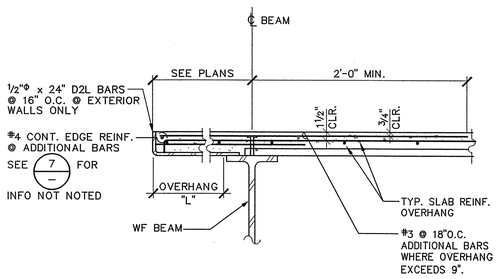

11 EDGE OF DECK PERPENDICULAR TO BEAM

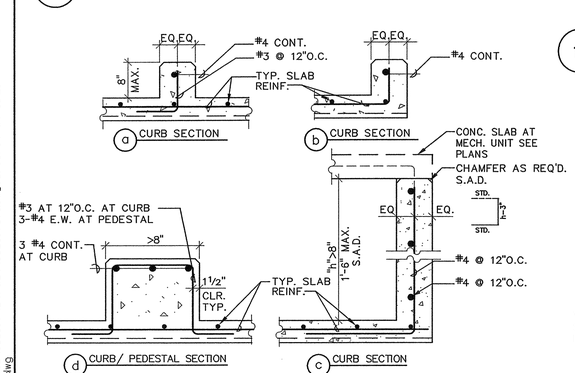

NOTE:
1. SEE ARCHITECTURAL FOR DIMENSIONS, DETAILS AND INFORMATION NOT SHOWN OR NOTED.
2. USE LIGHT WEIGHT CONCRETE TYP. U.O.N.

16 CONCRETE CURBS AT STEEL DECK

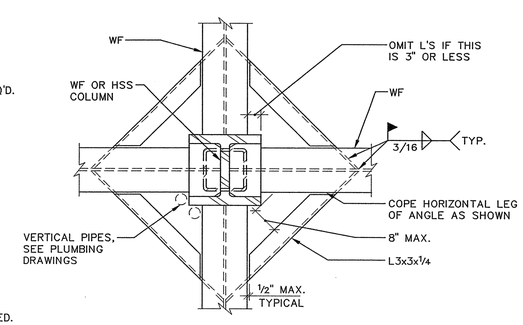

12 STEEL DECK SUPPORT AT COLUMN

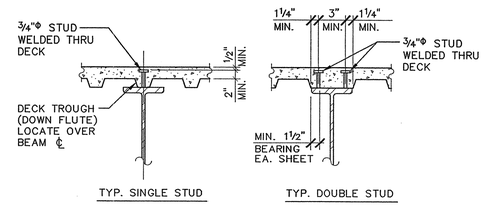

NOTES:
1. SPLIT DECK LONGITUDINALLY WHERE REQ'D. TO ENLARGE TROUGH.
2. PROVIDE DOUBLE STUDS WHERE SINGLE STUD SPACING WOULD BE LESS THAN 4½" O.C.

5 SHEAR STUD DETAIL

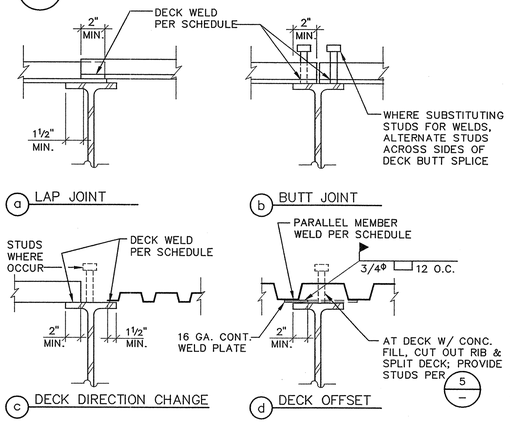

NOTES:
1. SEE STEEL DECK NOTES AND DECK SCHEDULE FOR COMPLETE INFORMATION.

6 TYPICAL DECK WELDING DETAILS

OVERHANGING "L"	BENT ℄ THICKNESS
0" < L ≤ 9"	3/16
9" < L ≤ 12"	1/4
12" < L ≤ 16"	5/16
16" < L ≤ 21"	3/8

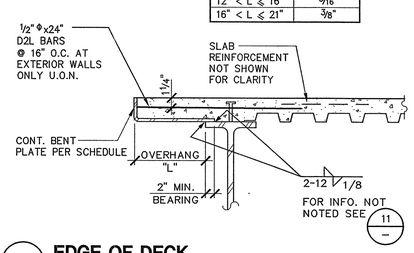

7 EDGE OF DECK PARALLEL TO BEAM

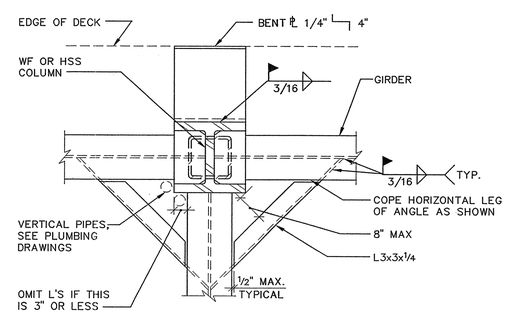

8 STEEL DECK SUPPORT AT EXTERIOR WALL COLUMN

1. SEE GENERAL NOTES ON S1.0 FOR MATERIAL SPECIFICATIONS.
2. STRUCTURAL PROPERTIES OF STEEL DECK SYSTEM SHALL EQUAL OR EXCEED THE PROPERTIES LISTED IN DETAIL 3 ON THIS SHEET.
3. DECKING SHALL BE CONTINUOUS OVER 3 OR MORE SUPPORTS WHEREVER POSSIBLE. OTHERWISE PROVIDE SHORING AS REQUIRED PER MANUFACTURER'S RECOMMENDATIONS. SPLICES SHALL BE LOCATED OVER SUPPORTS.
4. DECK SHALL HAVE A MINIMUM OF 2" BEARING AT ALL SUPPORTING MEMBERS (MEMBERS PERPENDICULAR TO DECK SPAN), AND 1-1/2" AT ALL PARALLEL MEMBERS.
5. DECK WELDING SHALL BE AS NOTED IN DETAIL 3 ON THIS SHEET.
6. PROVIDE BENT ℄ CLOSURE PIECES AT ALL INTERIOR AND EXTERIOR EDGES OF DECK U.O.N.. SEE DETAILS 7 AND 11 ON THIS SHEET.
7. OPENINGS THROUGH DECKING SHOWN ON FRAMING PLANS ARE NOT COMPLETE AS TO NUMBER, SIZE AND LOCATION. FOR COMPLETE INFORMATION REFER TO DRAWINGS OTHER THAN STRUCTURAL.
8. USE STRENGTHENING AT OPENINGS AS SHOWN IN DETAIL 15 ON THIS SHEET UNLESS OTHERWISE NOTED. PROVIDE STRENGTHENING BEFORE CUTTING OPENING.
9. DETAILS SHOWN ARE FOR TYPICAL REINFORCING OF DECKS AT OPENINGS. FOR SPECIAL CONDITIONS, SUBMIT LAYOUT OF OPENINGS AND PROPOSED REINFORCING OF DECK FOR REVIEW.
10. MULTIPLE OPENINGS WITH A CLEAR DISTANCE LESS THAN 32" OR FOUR TIMES THE SIZE OF THE LARGER OPENING, WHICHEVER IS GREATER, TO BE TREATED AS A SINGLE GROUP OPENING.
11. IF OPENING IS CUT PRIOR TO FILL PLACEMENT, PROVIDE CLOSURE PIECES AND SHORING AS REQUIRED.
12. FOR OPENINGS THROUGH DECK THAT CUT ONLY ONE WEB AND ARE 6" SQUARE OR 6" DIAMETER MAXIMUM, NO STRENGTHENING IS REQUIRED.
13. SEE MECHANICAL / PLUMBING DRAWINGS FOR DETAILS OF UTILITIES SUSPENDED FROM THE CONCRETE AND STEEL DECK SYSTEM. POINT LOADS TO THE DECK FROM THESE DETAILS SHALL NOT EXCEED 100 POUNDS.
14. DO NOT PLACE CONDUITS OR OTHER PIPES IN CONCRETE FILL OVER DECK.
15. SHEAR STUDS WELDED THROUGH THE DECK, WITH A MINIMUM CLEARANCE OF 1" FROM THE EDGE OF THE DECK TO THE STUD CENTER LINE, MAY BE SUBSTITUTED ONE FOR ONE FOR A DECK WELD.
16. ALL WELDED STUDS SHALL BE 3/4" DIAMETER. STUD LENGTHS SHALL BE PER DETAIL 5 ON THIS SHEET.
17. TYPICAL SHEAR STUD SPACING IS SHOWN IN DETAIL 4 ON THIS SHEET. WHERE ONE NUMBER OF STUDS DESIGNATION IS GIVEN, SPACE SHEAR STUDS EQUALLY ALONG BEAM AS SHOWN. WHERE MULTIPLE NUMBER OF STUDS DESIGNATIONS ARE GIVEN, ONE DESIGNATION IS PROVIDED FOR EACH BAY. SPACE SHEAR STUDS EQUALLY THROUGH BAY.
18. ALL BEAMS AND GIRDERS WHICH ARE COVERED BY STEEL DECK AND CONCRETE FILL, SHALL HAVE SHEAR STUDS WITH A MAXIMUM SPACING OF 24" ON CENTER UNLESS OTHERWISE NOTED.
19. SEE DETAILS 8 & 12 ON THIS SHEET FOR TYPICAL DECK SUPPORT AT COLUMNS.
20. SEE DETAIL 9 ON THIS SHEET FOR TYPICAL CONSTRUCTION JOINT IN CONCRETE.
21. PROVIDE VENTED DECKING TYPICAL UNLESS OTHERWISE NOTED.
22. THE FIRST SHEET OF STEEL DECKING ADJACENT & PARALLEL TO PERIMETER WF BMS & BRACED FRAME SHALL BE A FULL WIDTH SHEET.

2 STEEL DECKING & SHEAR STUD NOTES

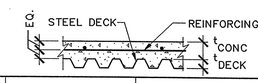

DECK ID	DECK TYPE & GAUGE	t_{CONC}	t_{DECK}	STEEL DECK ONLY			ATTACHMENT			TYP. SLAB REINF.
				I(in⁴)	+S(in³)	-S(in³)	AT SUPPORT MEMBERS	AT PARALLEL MEMBERS	AT SIDELAPS	
SD-1	VERCO W2 18 GAUGE (VENTED)	3¼"	2"	0.555	0.510	0.511	½"Φ PUDDLE WELDS @ 4 PER SHT	½"Φ PUDDLE WELD @ 12" O.C.	1½" TOP SEAM WELD @ 12" O.C.	#3 @ 12" O.C. E.W.
SD-2	VERCO B 18 GAUGE (VENTED)	N/A	1½"	0.302	0.322	0.335	½"Φ PUDDLE WELDS @ 4 PER SHT	½"Φ PUDDLE WELD @ 12" O.C.	1½" TOP SEAM WELD @ 12" O.C.	N/A
SD-3	VERCO N 18 GAUGE	N/A	3"	1.146	0.664	0.737	½"Φ PUDDLE WELDS @ 4 PER SHT	½"Φ PUDDLE WELD @ 12" O.C.	1½" TOP SEAM WELD @ 12" O.C.	N/A
SD-4	AEP SPAN HR-36 18 GAUGE	N/A	1½"	0.263	0.326	0.306	5-#12 SMS PER SHEET	#12 SMS @ 12" O.C.	#12 SMS @ 12" O.C.	N/A

NOTES:
1. DECK DESIGNATIONS ARE VERCO (ICBO-ER 2078P) OR AEP SPAN (ICBO-ER 2757) PRODUCTS.
2. PUDDLE WELDS ARE "EFFECTIVE" DIAMETER.

3 STEEL DECK SCHEDULE

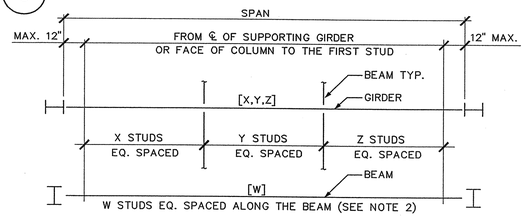

NOTES;
1. SEE FRAMING PLANS AND SHEAR STUD NOTES THIS SHEET FOR STUD QUANTITIES. MAX. STUD SPACING IS AT 24"O.C.
2. SEE NOTE 17 OF STEEL DECKING AND SHEAR STUD NOTES THIS SHEET FOR ADDITIONAL SPACING INFO.

4 SHEAR STUD SPACING DIAGRAM

DASSE DESIGN INC.
STRUCTURAL ENGINEERS
33 New Montgomery St., Suite 850
San Francisco CA 94105
415/243-8400 – Fax 415/243-9165

DIABLO VALLEY COLLEGE

DIABLO VALLEY COLLEGE NEW BOOKSTORE

321 GOLF CLUB RD.
PLEASANT HILL, CALIFORNIA

REGISTERED PROFESSIONAL ENGINEER WILLIAM J. ANDREWS S 3773 Exp. 3-31-06 STRUCTURAL STATE OF CALIFORNIA

DATE: 23 JULY, 2004

REVISIONS:

BID SET

SHEET TITLE:
TYPICAL STEEL DECK DETAILS

IDENTIFICATION STAMP
DIVISION OF THE STATE ARCHITECT
105925
APPL 01
AC — FLS — SS A-1
DATE: 5-12-04 JUL 2 6 2004

BLDG. ID: 098
ID CODE: 312098-109.01-A

DRAWN BY: LAS
CHECKED BY: SAG
JOB NO: 03B197

SHEET S7.1

FILE: E:\2003 Jobs\03B197\struct\03B197S71.dwg05/05/04 at 16:21
XREF: 03B197B.dwg

MEMBER SIZE	a	b
21"	9"	9"
18"	7½"	7½"
16"	6½"	6½"
14"OR LESS (6 STUDS)	9"	–

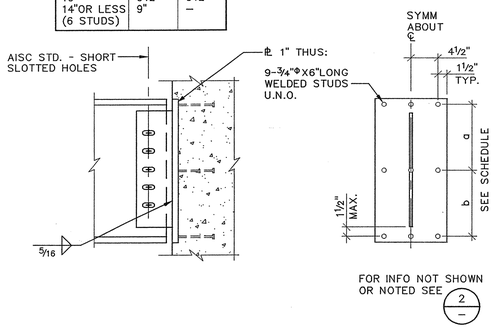

14 BEAM TO CONCRETE WALL CONNECTION

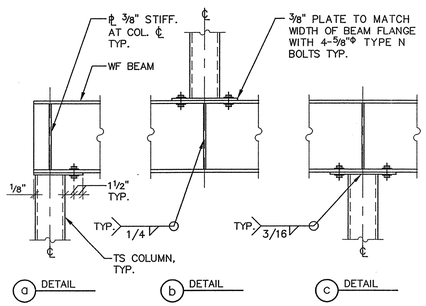

15 BEAM TO TS COLUMN CONNECTION

STORY LEVEL / MARK		C1a/C1b	C2	C3	C4	C5	C6	C7
ROOF T.O.S.			VARIES			VARIES		
2ND FLOOR T.O.S.		HSS14x14x5/16	HSS18.000 x 0.375	HSS5x5x5/16	HSS14x14x3/8	W8x58	W8x40	HSS5x5x1/4
1ST FLOOR T.O.C.								
BASE PLATE	B	1'-8"	1'-9"	11"	PER DTL	PER DTL	1'-3"	-
	N	1'-8"	1'-9"	11"	PER DTL	PER DTL	1'-3"	-
	t℄	¾"	¾"	¾"	PER DTL	PER DTL	¾"	-
	DETAIL	11,12/–	11/– SIM	11/–	1/S7.4	1/S7.4	11/–	2/S7.6

NOTES:

1. SEE FOUNDATION PLAN FOR COLUMN ORIENTATION.
2. SEE DETAILS 6 & 8 THIS SHEET FOR COLUMN CAP DETAIL.
3. SEE DETAIL 10 THIS SHEET FOR COLUMN CAP AT MOMENT RESISTING CONNECTIONS. (DESIGNATED ON PLANS THUS: ⊢⊳⊸)

16 COLUMN SCHEDULE

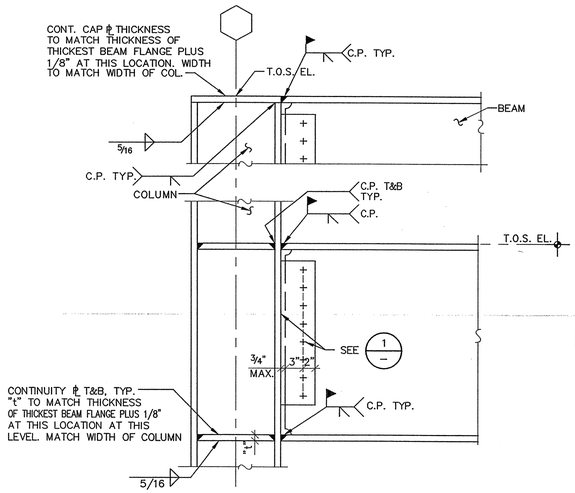

NOTES:

1. PERPENDICULAR FRAMING NOT SHOWN FOR CLARITY.

SHOWN THUS: ⊢⊳⊸ ON PLANS

10 BEAM TO COLUMN FLANGE MOMENT CONNECTION

N.T.S.

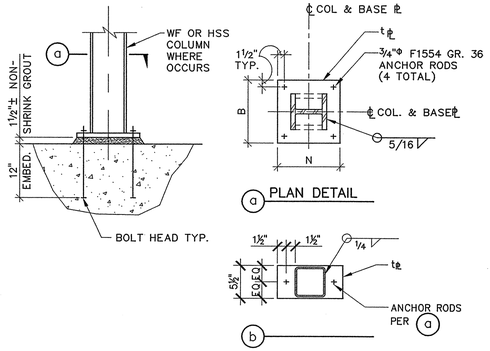

NOTE:

1. FOR t℄, B, & N SEE COLUMN SCHEDULE 16/–
2. USE AISC STD OVERSIZED HOLES WITH 2½" SQ x ¼" THICK PLATE WASHERS.

11 COLUMN BASE PLATE

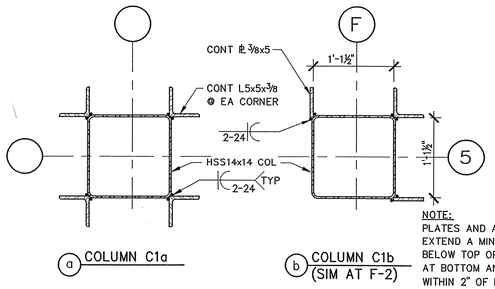

NOTE:

PLATES AND ANGLES EXTEND A MIN OF 3" BELOW TOP OF CONC AT BOTTOM AND TO WITHIN 2" OF BOTTOM OF CAP PLATE AT TOP SPLICE PLATES AND ANGLES AS REQD WITH BUTT WELD AND GRIND SMOOTH.

12 DETAIL OF BUILT-UP COLUMN SECTION

1"=1'-0"

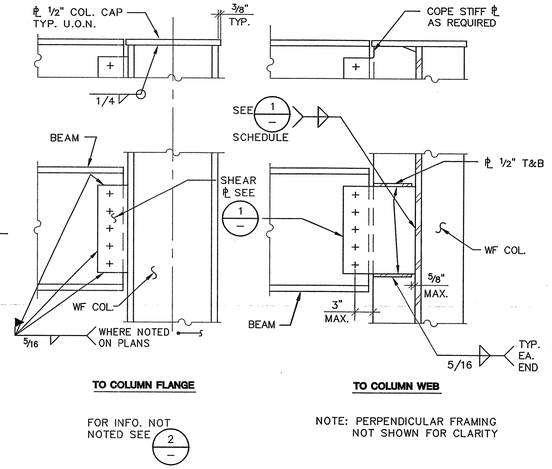

6 BEAM TO COLUMN CONNECTION

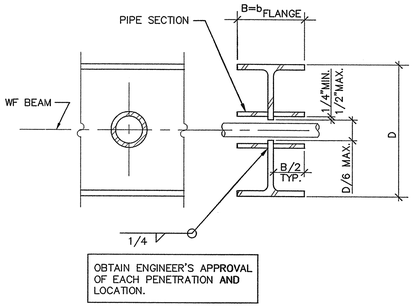

7 PENETRATION THRU BEAM WEB

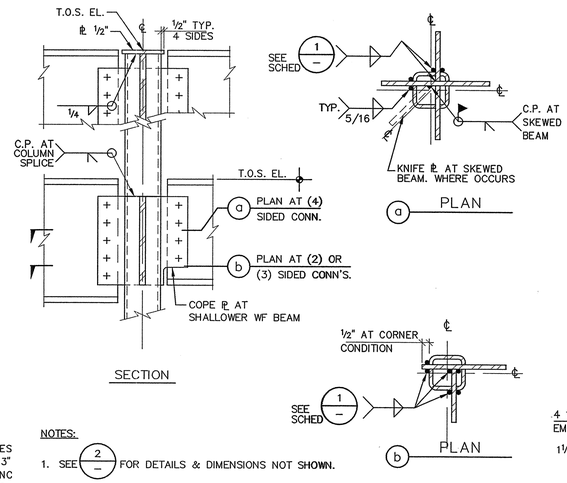

NOTES:

1. SEE 2/– FOR DETAILS & DIMENSIONS NOT SHOWN.
2. SLOT HSS FOR KNIFE PLATES NOT SHOWN.
3. DETAIL SIMILAR AT PIPE COLUMNS.

8 BEAM TO HSS AND ROUND HSS COLUMN CONNECTION

DEPTH OR SIZE OF BEAM	NO. OF BOLTS (2) 7/8"Φ A325SC U.O.N.	SHEAR PLATE	WELD (1) SIZE
8",10",C8	2	⅜"	5/16"
12",14", C12, MC12	3	⅜"	5/16"
16"	4	⅜"	5/16"
18"	5	⅜"	5/16"
21"	6	⅜"	5/16"
24"	7	½"	⅜"
27"	8	½"	⅜"

NOTES:

1. USE COMPLETE PENETRATION WELDS AT ALL SKEWED CONNECTIONS WHERE AISC PRE-QUALIFIED FILLET WELDS ARE NOT POSSIBLE
2. MARKS ——⊸ ON PLANS DENOTE WELDED SHEAR TABS. SEE DETAIL 6/–.

1 BEAM CONNECTION SCHEDULE

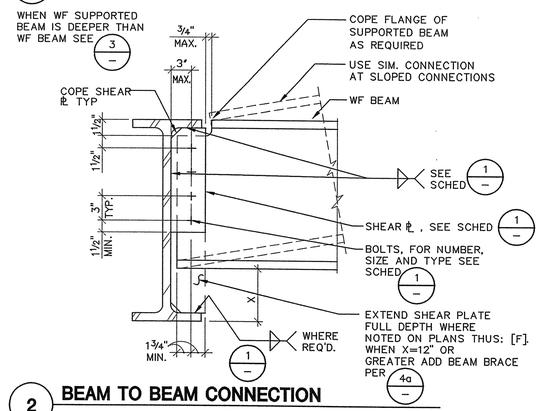

2 BEAM TO BEAM CONNECTION

N.T.S.

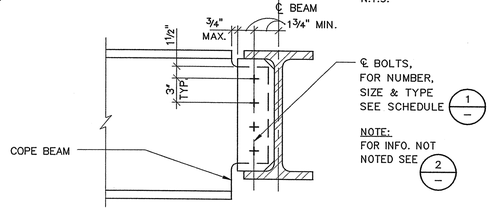

3 BEAM TO SHALLOWER BEAM CONNECTION

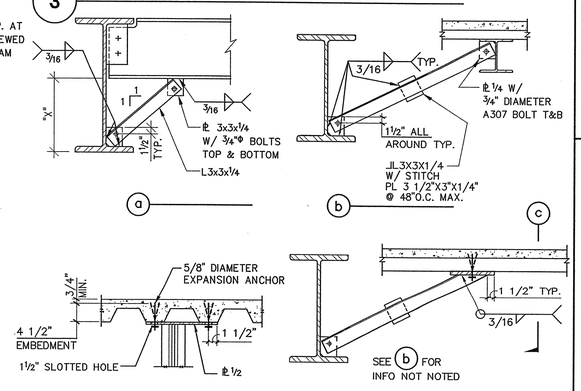

NOTE: FOR INFO. NOT NOTED SEE 2/–

4 BEAM BRACING

DASSE DESIGN INC.
STRUCTURAL ENGINEERS
33 New Montgomery St., Suite 850
San Francisco CA 94105
415/243-8400 – Fax 415/243-9165

DIABLO VALLEY COLLEGE

DIABLO VALLEY COLLEGE NEW BOOKSTORE

321 GOLF CLUB RD.
PLEASANT HILL, CALIFORNIA

REGISTERED PROFESSIONAL ENGINEER WILLIAM R. ANDREWS 7-23-3973 Exp. 3-31-06 STRUCTURAL STATE OF CALIFORNIA

DATE: 23 JULY, 2004

REVISIONS:

BID SET

SHEET TITLE:
TYPICAL STEEL FRAMING DETAILS

IDENTIFICATION STAMP
DIVISION OF THE STATE ARCHITECT
105925
APPL 01
AC — FLS — SS A1
DATE: 5-12-04 JUL 2 6 2004

BLDG. ID: 098
ID CODE: 312098-109.01-A

DRAWN BY: LAS
CHECKED BY: SAG
JOB NO: 03B197

SHEET S7.2

FILE: E:\2003 Jobs\03B197\struct\03B197S72.dwg 07/16/04 at 15:02
XREF: 03B197TB.dwg

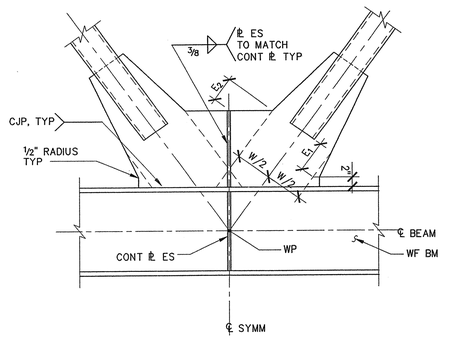

NOTE:
FOR INFO NOT NOTED OR SHOWN SEE 2/—

10 HSS BRACE TO WF BEAM CONNECTION

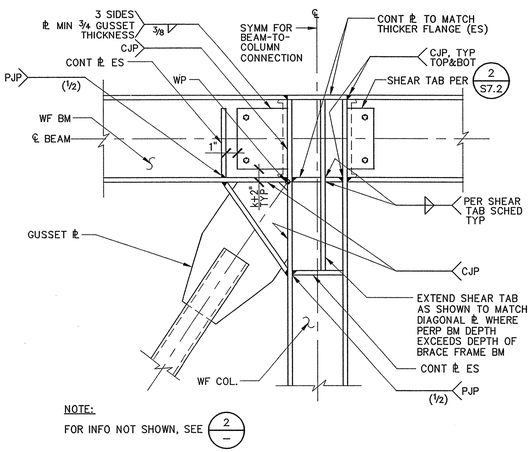

NOTE:
FOR INFO NOT SHOWN, SEE 2/—

7 TYPICAL BRACED FRAME CONNECTION

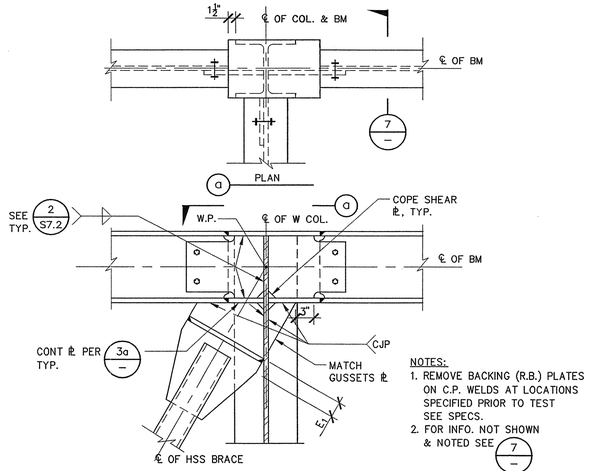

NOTES:
1. REMOVE BACKING (R.B.) PLATES ON C.P. WELDS AT LOCATIONS SPECIFIED PRIOR TO TEST SEE SPECS.
2. FOR INFO. NOT SHOWN & NOTED SEE 7/—

4 BRACED FRAME CONNECTION

BRACE	GUSSET t (in.)	GUSSET W (in.)	WELD "A" s (in.)	REINF. ANGLE
HSS5x5x5/16	7/8	13	5/16	L2x1 1/4x5/16
HSS5x5x3/8	1	13	3/8	L2x1 1/4x1/4
HSS5x5x1/2	1 1/4	13	1/2	L2x1 1/4x1/4

NOTES:
1. SEE GENERAL NOTES ON SHEET S1.0.
2. WELD LENGTHS NOTED IN SCHEDULE ARE TO BE WELDED ON EACH SIDE OF GUSSET PLATE AND EACH SIDE OF BRACE, WHERE APPLICABLE.
3. FOR BRACE SIZES SEE FRAME ELEVATIONS SHEET S3.1.
4. SLOT BRACE AT CENTER FOR GUSSET PLATE WITH 2" LONG MAXIMUM OVERSLOT. MAX SLOT WIDTH TO BE 1/8" WIDER THAN GUSSET ℄ THICKNESS. SEE 6/—
5. WELD METAL USED FOR THE WELDS SHOWN ON THIS SHEET SHALL BE RATED FOR CHARPY V-NOTCH (CVN) VALUES OF 20 FT-LBS AT MINUS 20° F. SEE SPECIFICATIONS FOR MORE INFORMATION.
6. FOR TYPICAL BRACE, GUSSET, AND CONN INFO, SEE 5/—
7. ALL BRACES TO BE A500 HSS GRADE B.
8. REINF IS REQUIRED AT EA END OF BRACE AT ALL SLOTTED BRACE CONDITIONS. SEE 6/—
9. MAX (1) 1/2"Φ ERECTION BOLT EA. END OF BRACE.
10. NO ADDITIONAL SLOTS OR HOLES PERMITTED IN BRACES. NO ATTACHMENTS TO BRACES ARE PERMITTED.
11. ALL GUSSET PLATES AND REINFORCEMENT PLATES TO BE ASTM A572, GRADE 50.
12. FOR CONDITIONS WHERE CONCRETE IS PLACED ON WF BEAM, SEE 10/—
12. FOR CONTINUITY PLATE INFO, SEE 3/—

2 BRACED FRAME CONNECTION SCHEDULE AND NOTES

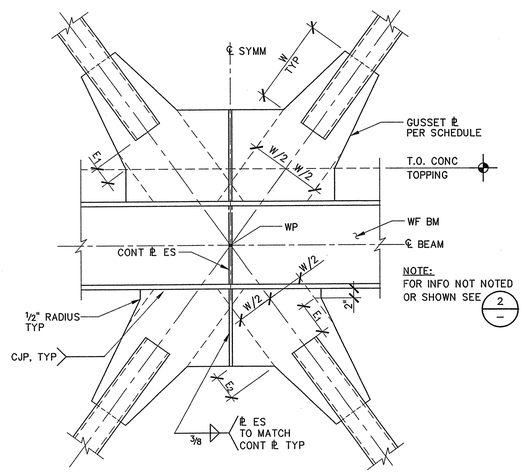

NOTE:
FOR INFO NOT NOTED OR SHOWN SEE 2/—

11 HSS BRACE TO WF BEAM CONNECTION

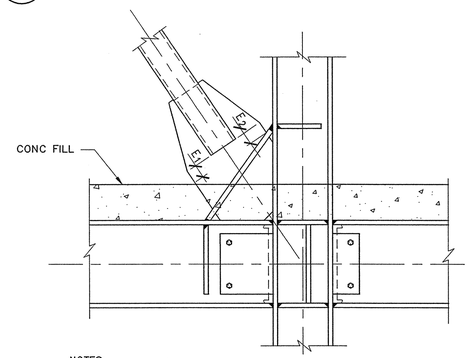

NOTES:
1. DIMENSION "E_1" IS MEASURED PERPENDICULAR TO BRACE END TO POINT WHERE GUSSET EDGE MEETS T.O. CONCRETE.
2. FOR INFO NOT SHOWN, SEE 2/— & 9/—

8 BRACED CONNECTION AT CONCRETE FILL

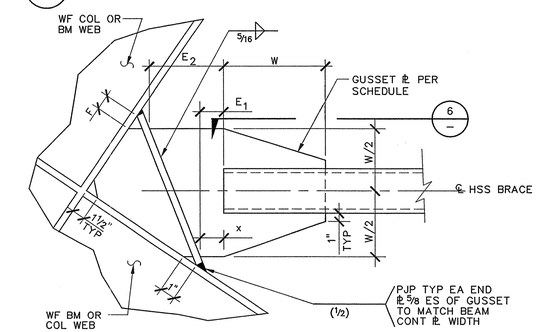

NOTES:
1. DIMENSION "E_1" SHALL BE MINIMUM 2x GUSSET PLATE THICKNESS AND MAXIMUM 3x GUSSET PLATE THICKNESS. DIMENSION "E_2" SHALL BE LESS THAN 15x GUSSET PLATE THICKNESS.
2. DIMENSION "F" TO BE 1" MINIMUM. DIMENSION "F" TO BE ONLY AS LARGE AS REQUIRED BY NOTE 1.
3. BRACE END TO BE CUT PERPENDICULAR TO BRACE CENTERLINE.
4. WHERE SLAB OCCURS SEE 8/—
5. DIMENTION "X" SHALL BE 3x GUSSET PLATE THICKNESS

5 TYPICAL HSS BRACE GUSSET DETAIL

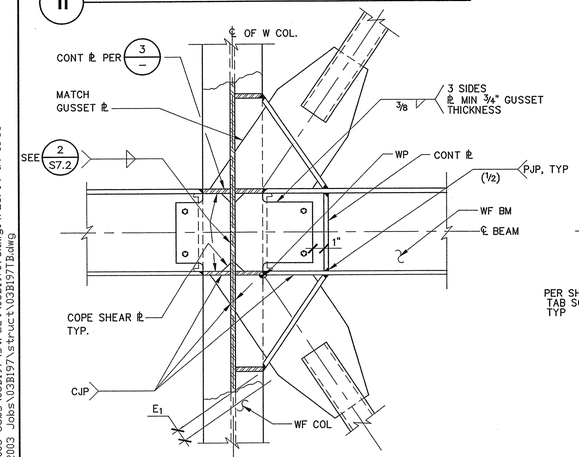

12 BRACED FRAME CONNECTION

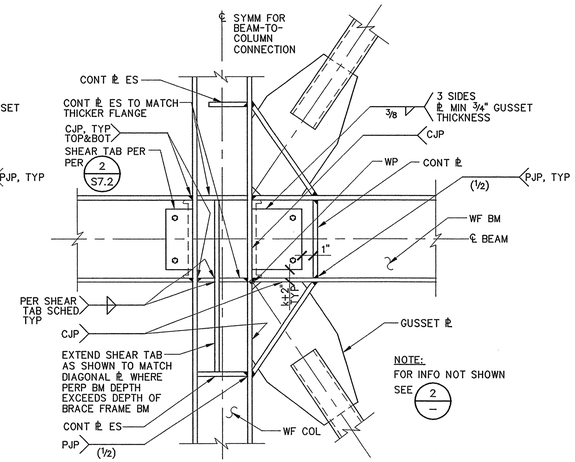

NOTE:
FOR INFO NOT SHOWN SEE 2/—

9 TYPICAL BRACED FRAME CONNECTION

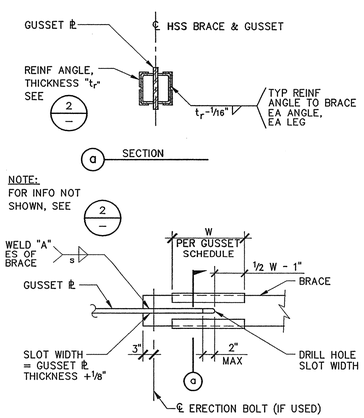

6 REINFORCING PLATE DETAIL

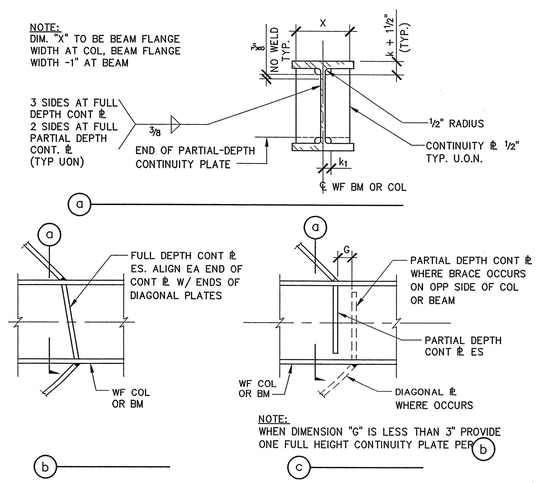

3 BRACE FRAME CONTINUITY PLATES

DASSE DESIGN INC.
STRUCTURAL ENGINEERS
33 New Montgomery St., Suite 850
San Francisco CA 94105
415/243-8400 – Fax 415/243-9165

DIABLO VALLEY COLLEGE

DIABLO VALLEY COLLEGE NEW BOOKSTORE

321 GOLF CLUB RD.
PLEASANT HILL, CALIFORNIA

REGISTERED PROFESSIONAL ENGINEER
WILLIAM A. ANDREWS
No. S3773
Exp. 3-31-06
STRUCTURAL
STATE OF CALIFORNIA

DATE: 23 July, 2004

REVISIONS:

BID SET

FOR PLAN REVIEW ONLY

SHEET TITLE:
STEEL BRACED FRAME DETAILS

IDENTIFICATION STAMP
DIVISION OF THE STATE ARCHITECT
105925
APPL 01
AC ___ FLS ___ SS AR
DATE: 5-12-04 JUL 26 2004

BLDG. ID: 098
ID CODE: 312098-109.01-A

DRAWN BY: BH
CHECKED BY: SAG
JOB NO: 03B197

SHEET
S7.3

FILE: E:\2003 Jobs\03B197\struct\03B197S73.dwg04/26/04 at 15:58
XREF: E:\2003 Jobs\03B197\struct\03B197TB.dwg

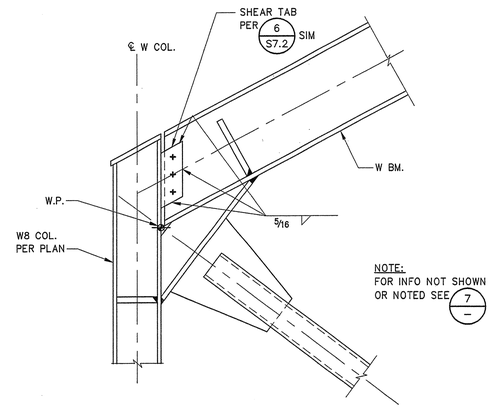

10 HSS BRACE CONNECTION

1" = 1'-0"

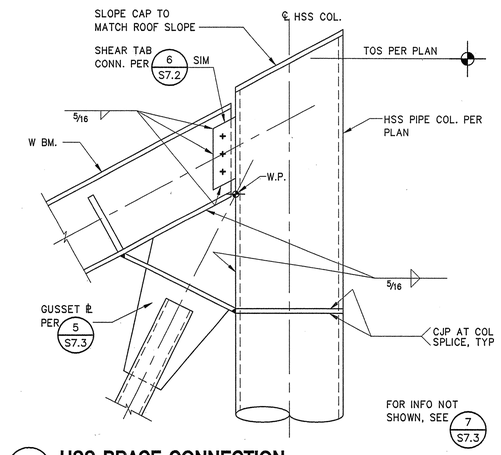

7 HSS BRACE CONNECTION

1" = 1'-0"

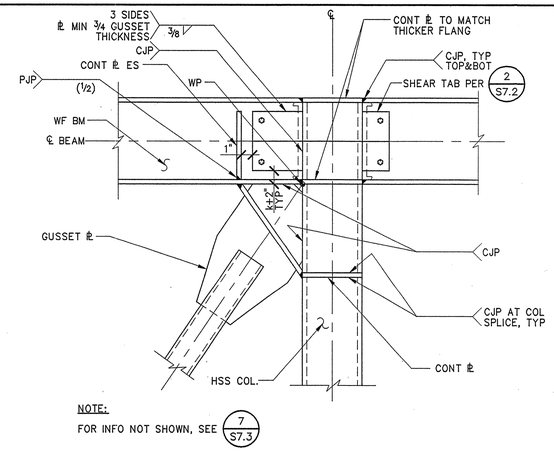

4 HSS BRACE CONNECTION

1" = 1'-0"

COLUMN ID	BASE PLATE THICKNESS	BASE PLATE "l"	BASE PLATE "w"	ANCHOR RODS DIAMETER	ANCHOR RODS EMBEDMENT	BASE ℞ DETAIL
C4	1½"	3'-0"	2'-0"	1"Φ	2'-3"	2 / —
C5	1½"	2'-6"	1'-6"	1"Φ	2'-3"	3 / — ; 5 / —

NOTES :

1. SEE DETAIL 2 / S7.3 FOR BRACED FRAME CONN. SCHEDULE AND NOTES.
2. SIZES AND LENGTHS NOTED IN SCHEDULE ARE MINIMUM REQUIRED.
3. ALL ANCHOR RODS TO BE ASTM F1554 GRADE 105.
4. ALL BRACED FRAME BASE ℞'s TO BE ASTM A572 GRADE 50.
5. USE AISC STANDARD OVERSIZE HOLES
6. NO COLUMN SPLICES AT BRACED FRAME.

1 BRACED FRAME ANCHORAGE SCHEDULE

N.T.S.

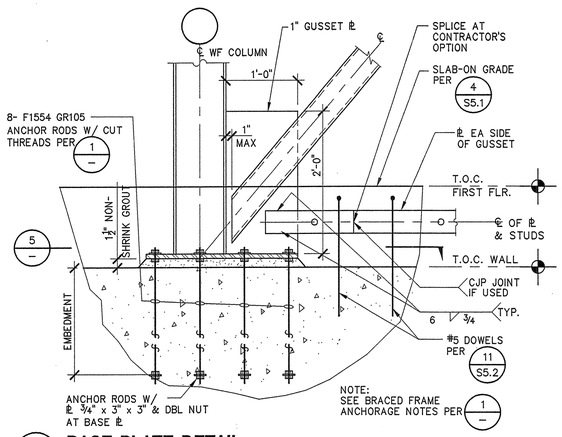

11 BASE PLATE DETAIL

1"=1'-0"

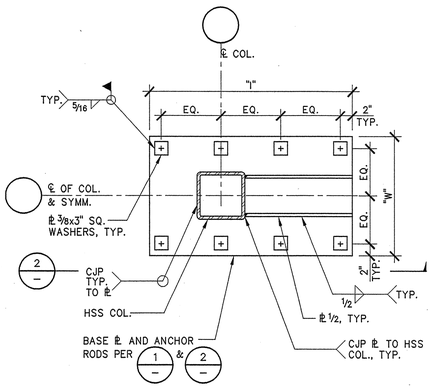

8 BRACED FRAME BASE PLATE DETAIL

N.T.S.

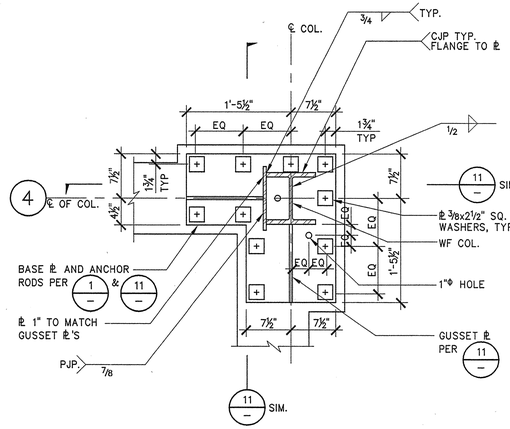

5 BRACED FRAME BASE PLATE DETAIL

1"=1'-0"

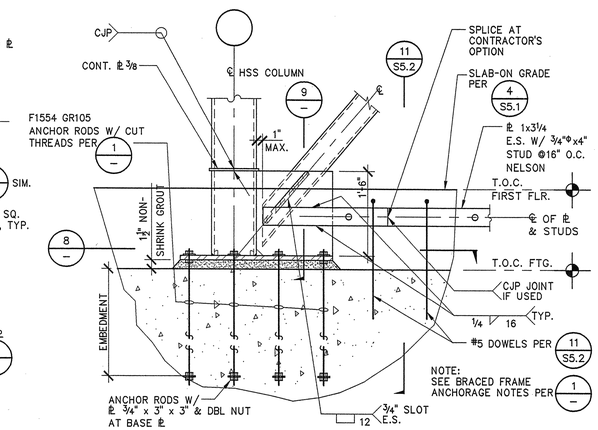

2 TYPICAL BRACE ANCHORAGE AT HSS COLUMN

N.T.S.

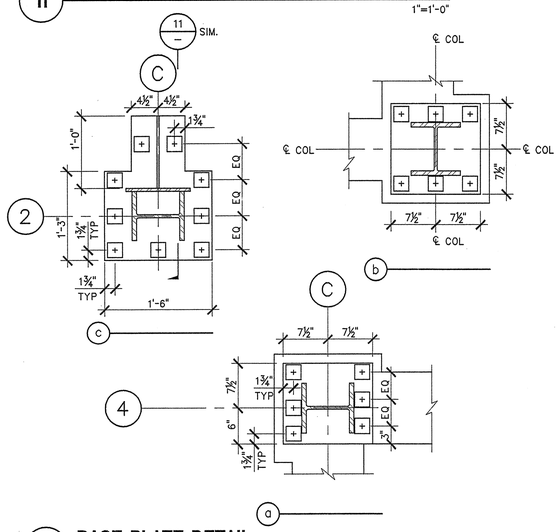

12 BASE PLATE DETAIL

1"=1'-0"

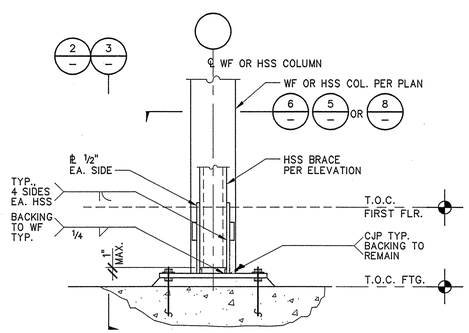

9 BRACED FRAME BASE PLATE SECTION

N.T.S.

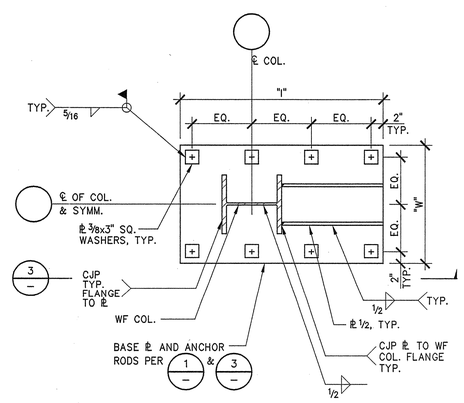

6 BRACED FRAME BASE PLATE DETAIL

N.T.S.

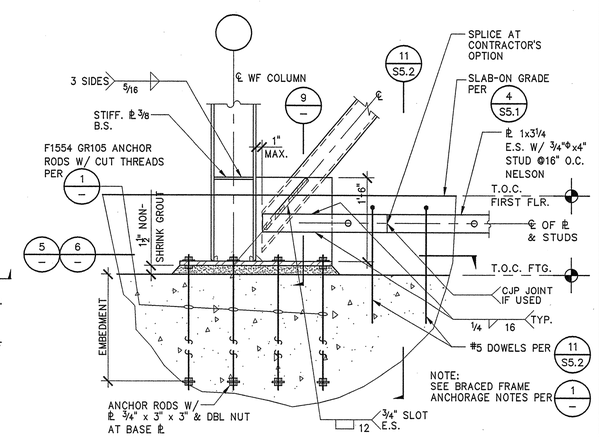

3 TYPICAL BRACE ANCHORAGE AT WF COLUMN

N.T.S.

DASSE DESIGN INC.
STRUCTURAL ENGINEERS
33 New Montgomery St., Suite 850
San Francisco CA 94105
415/243-8400 – Fax 415/243-9165

DIABLO VALLEY COLLEGE

DIABLO VALLEY COLLEGE NEW BOOKSTORE

321 GOLF CLUB RD.
PLEASANT HILL, CALIFORNIA

REGISTERED PROFESSIONAL ENGINEER — WILLIAM A. ANDREWS — S 3773 — Exp. 3-31-05 — STRUCTURAL — STATE OF CALIFORNIA

DATE: 23 JULY, 2004

REVISIONS:

BID SET

FOR PLAN REVIEW ONLY

SHEET TITLE:

STEEL BRACED FRAME DETAILS

IDENTIFICATION STAMP
DIVISION OF THE STATE ARCHITECT
105925
APPL 01
AC ___ FLS ___ SS AB
DATE: 5-12-04 JUL 26 2004

BLDG. ID: 098
ID CODE: 312098-109.01-A

DRAWN BY: BH
CHECKED BY: SAG
JOB NO: 03B197

SHEET S7.4

FILE: E:\2003 Jobs\03B197\structure\03B197S74.dwg05/10/04 at 12:32
XREF: 03B197TB.dwg

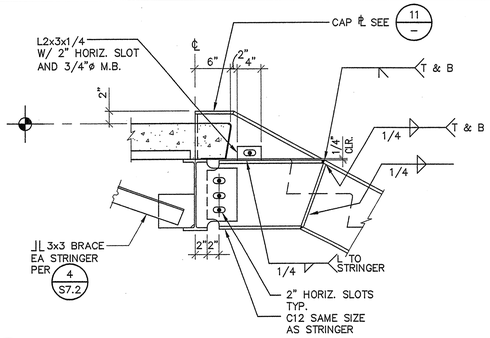

13 STAIR STRINGER CONNECTION AT FLOOR

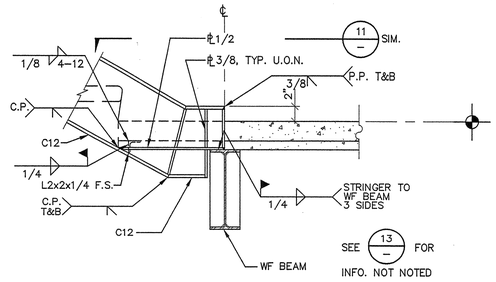

9 STAIR STRINGER CONNECTION AT FLOOR

GENERAL NOTES:

1. ALL WORK SHALL CONFORM TO CALIFORNIA CODE OF REGULATIONS, 2001 EDITION.
2. CAB & PLUNGER WEIGHT = 5500 LBS + 700 LBS = 6200 LBS
   CAB CAPACITY = 2,500#
3. ELEVATOR MANUFACTURER SHALL VERIFY APPLICABILITY OF ALL DIMENSIONS AND DETAILS.
4. SUBMIT SUBSTANTIATING STRUCTURAL CALCULATIONS (SIGNED AND STAMPED BY A LICENSED CALIFORNIA STRUCTURAL ENGINEER) VERIFYING ADEQUACY OF GUIDE RAIL AND ALL ASSOCIATED CONNECTIONS FOR ARCHITECTS AND STRUCTURAL ENGINEER'S APPROVAL PRIOR TO INSTALLATION.
5. ELEVATOR EQUIPMENT ANCHORAGE DETAILS AND CALCULATIONS SHALL BE SUBMITTED TO DSA FIELD ENGINEER FOR APPROVAL.
6. ALL BOLT HOLES SHALL NOT BE MORE THAN 1/16 LARGER THAN BOLT DIAMETER. SLOTTED HOLES ARE NOT PERMITTED IN FINAL CONDITION.
7. GUIDE RAIL SUPPORT LOCATIONS SHALL NOT BE SPACED APART GREATER THAN 8'-0".
8. DESIGN CRITERIA:
   SEISMIC: 0.50g
   DISTRIBUTION OF SEISMIC FORCE: ⅓ TO TOP, ⅔ TO BOTTOM
   MASS: WEIGHT OF CAR + 40% OF RATED CAPACITY

5 ELEVATOR RAIL SUPPORT GENERAL NOTES

NO SCSALE

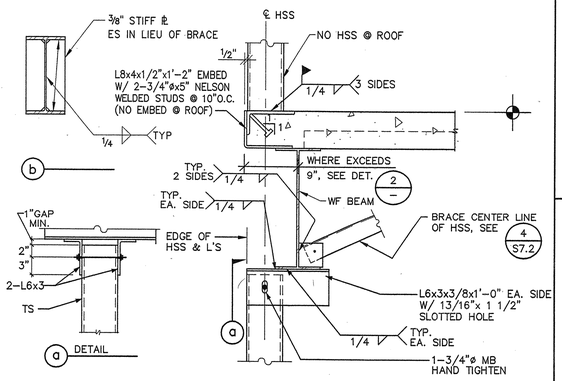

1 ELEVATOR RAIL SUPPORT BRACING

1"=1'-0"

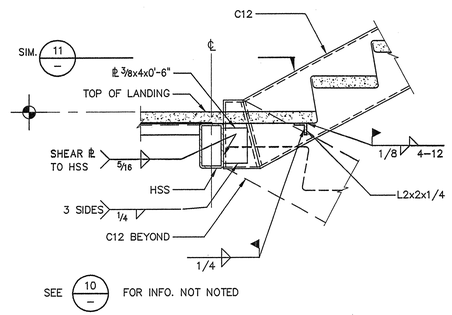

14 STAIR STRINGER CONNECTION INTERMEDIATE LANDING

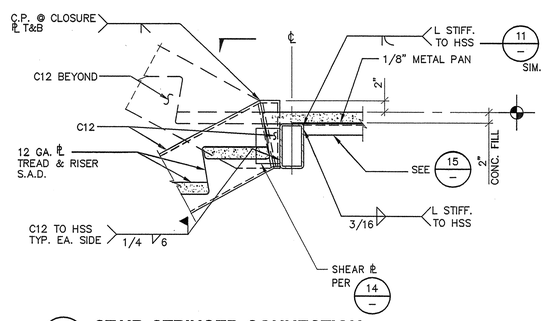

10 STAIR STRINGER CONNECTION AT INTERMEDIATE LANDING

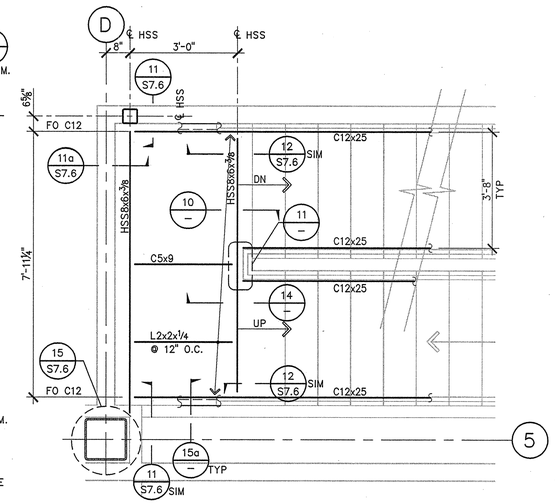

7 INTERMEDIATE LANDING FRAMING PLAN FIRST FLOOR LEVEL - STAIR 2

1/2"=1'-0"

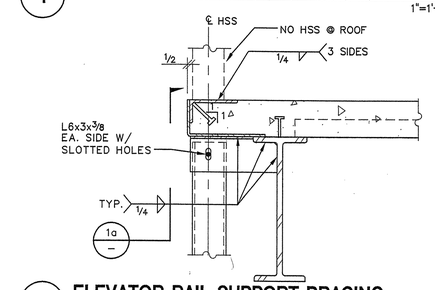

2 ELEVATOR RAIL SUPPORT BRACING

1"=1'-0"

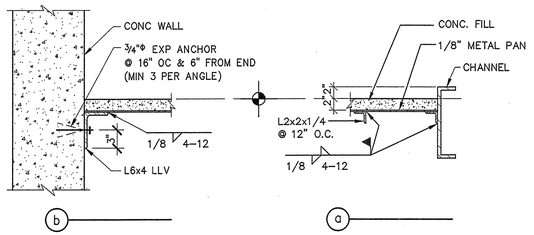

15 STAIR LANDING EDGE

1"=1'-0"

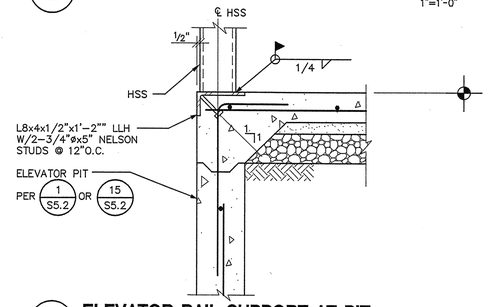

3 ELEVATOR RAIL SUPPORT AT PIT

1"=1'-0"

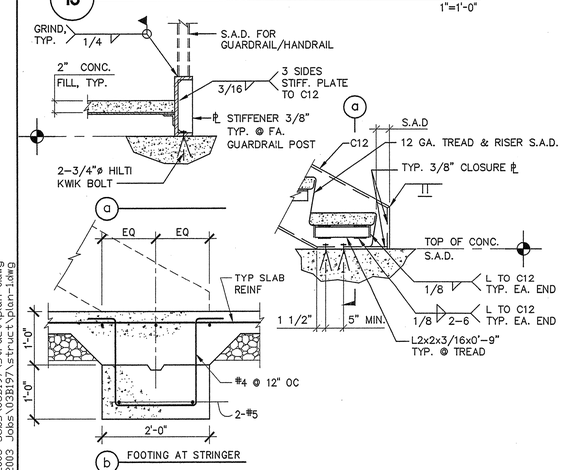

16 STAIR STRINGER BASE CONNECTION

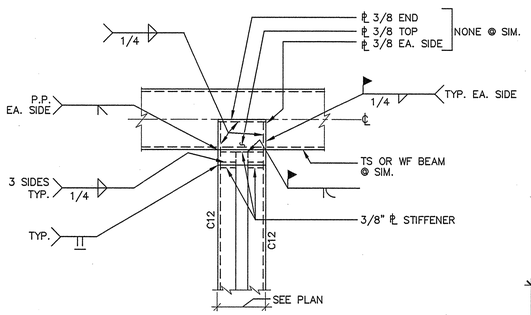

11 STAIR STRINGER CONNECTION PLAN

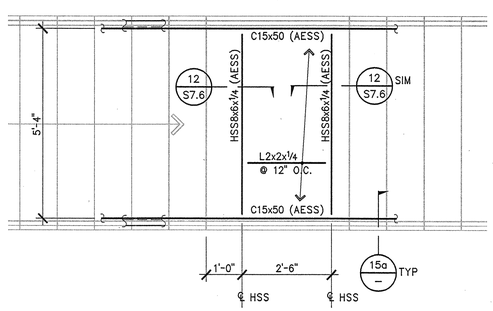

12 INTERMEDIATE LANDING FRAMING PLAN STAIR 1

1/2"=1'-0"

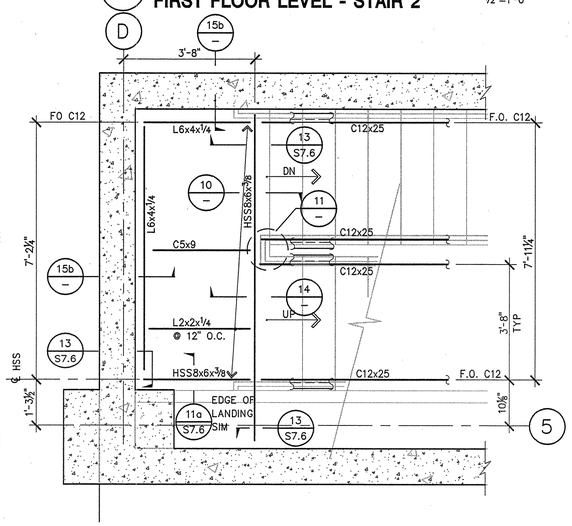

8 INTERMEDIATE LANDING FRAMING PLAN BASEMENT LEVEL - STAIR 2

1/2"=1'-0"

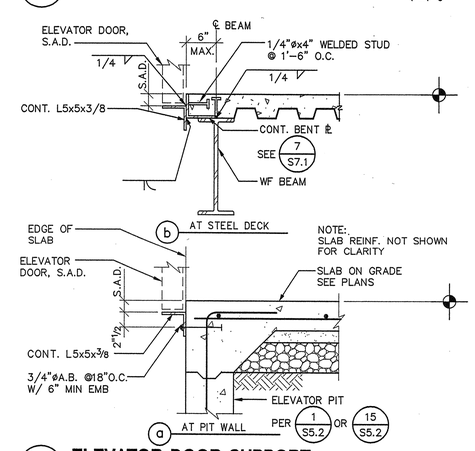

4 ELEVATOR DOOR SUPPORT

1"=1'-0"

DASSE
DESIGN INC.
STRUCTURAL ENGINEERS
33 New Montgomery St., Suite 850
San Francisco CA 94105
415/243-8400 — Fax 415/243-9165

DIABLO VALLEY COLLEGE

DIABLO VALLEY COLLEGE NEW BOOKSTORE

321 GOLF CLUB RD.
PLEASANT HILL, CALIFORNIA

REGISTERED PROFESSIONAL ENGINEER
WILLIAM F. ANDREWS
S.E. 5722
EXP. 3-31-06
STRUCTURAL
STATE OF CALIFORNIA

DATE: 23 JULY, 2004

REVISIONS:

BID SET

FOR PLAN REVIEW ONLY

SHEET TITLE:
ELEVATOR AND STAIR DETAILS

IDENTIFICATION STAMP
DIVISION OF THE STATE ARCHITECT
APPL 01 105925
AC ___ FLS ___ SS A2
DATE: 5-12-04 JUL 26 2004

BLDG. ID: 098
ID CODE: 312098-109.01-A

DRAWN BY: BH
CHECKED BY: SAG
JOB NO: 03B197

SHEET
S7.5

FILE: E:\2003 Jobs\03B197\struct\03B197S75.dwg05/03/04 at 1600
XREF: E\2003 Jobs\03B197\struct\03B197TB.dwg
XREF: E\2003 Jobs\03B197\struct\plan-0.dwg
XREF: E\2003 Jobs\03B197\struct\plan-2.dwg
XREF: E\2003 Jobs\03B197\struct\plan-1.dwg

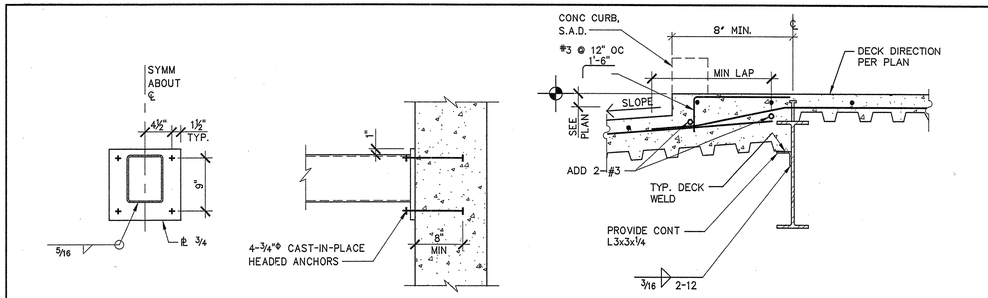

13 HSS BEAM TO CONCRETE WALL CONNECTION 1"=1'-0"

9 DEPRESSED SLAB 1"=1'-0"

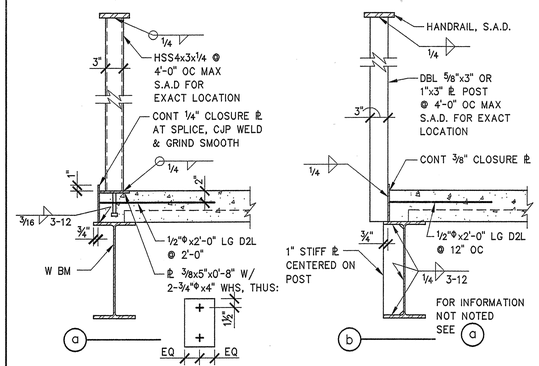

14 EDGE OF DECK AT LOW PARTITION 1"=1'-0"

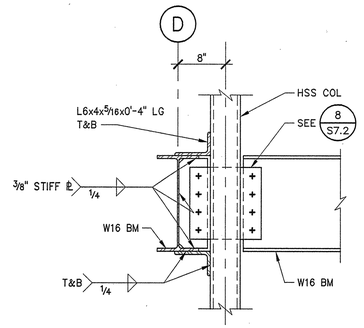

10 DETAIL 1"=1'-0"

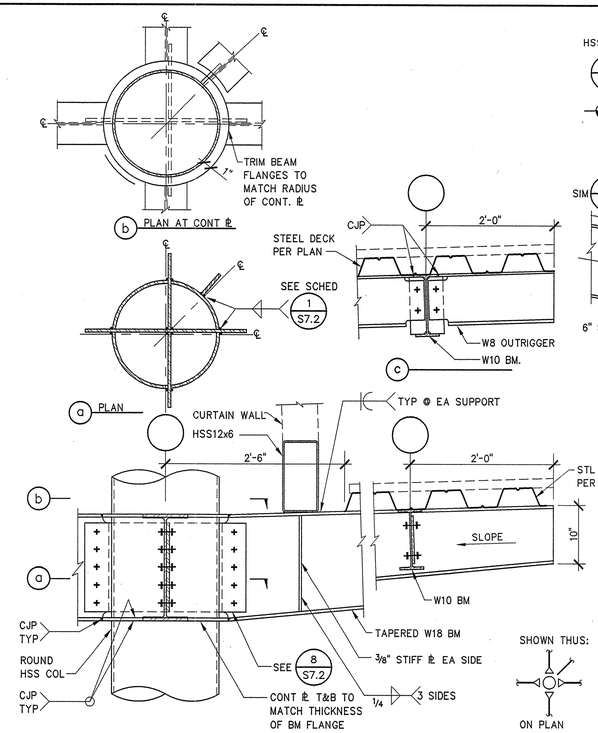

6 SECTION AT LOBBY CANOPY 1"=1'-0"

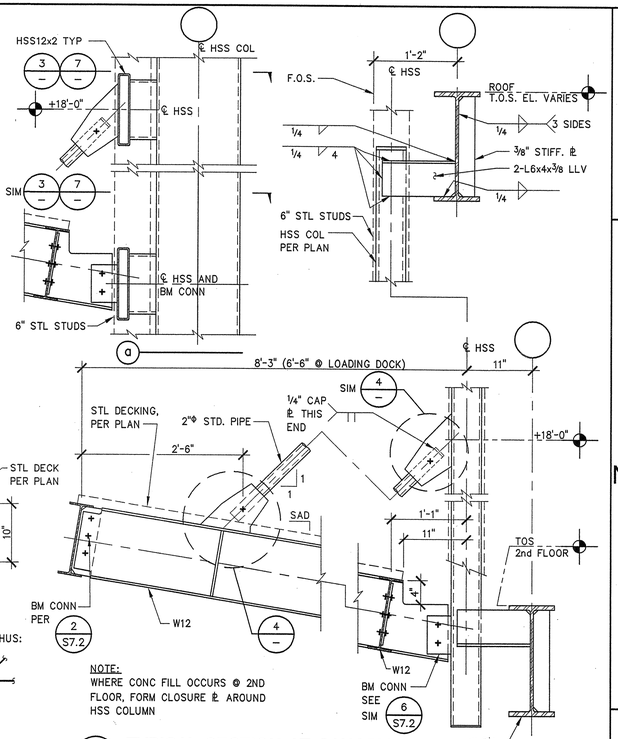

2 TYPICAL SECTION AT CANOPY 1"=1'-0"

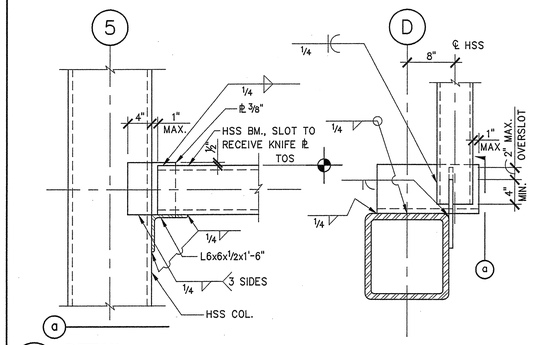

15 DETAIL 1"=1'-0"

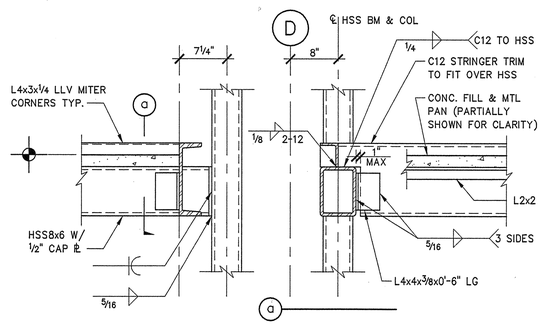

11 STAIR STRINGER CONNECTION AT INTERMEDIATE LANDING 1"=1'-0"

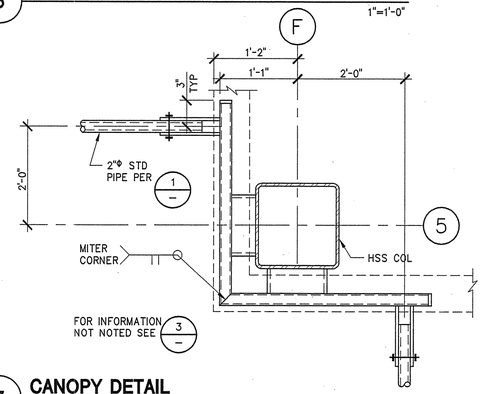

7 CANOPY DETAIL 1"=1'-0"

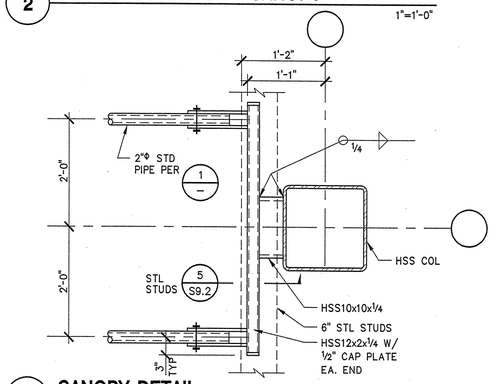

3 CANOPY DETAIL 1"=1'-0"

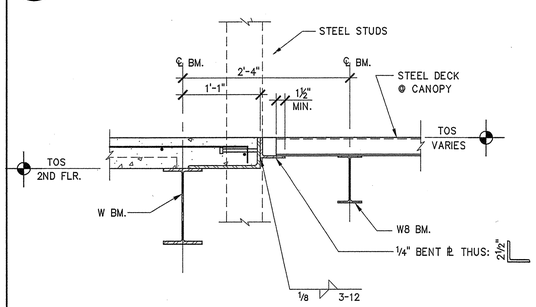

16 DETAIL AT LOBBY CANOPY 1"=1'-0"

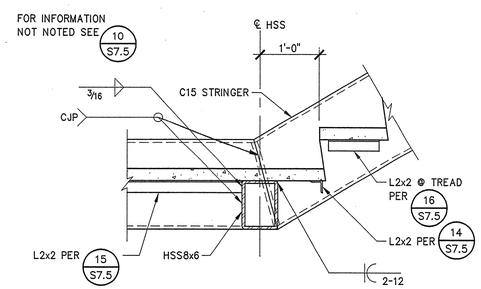

12 STAIR DETAIL AT INTERMEDIATE LANDING 1"=1'-0"

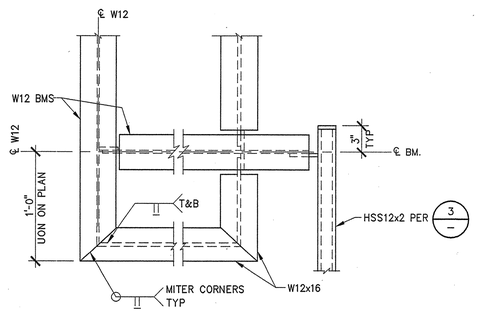

8 CANOPY PLAN DETAIL 1½"=1'-0"

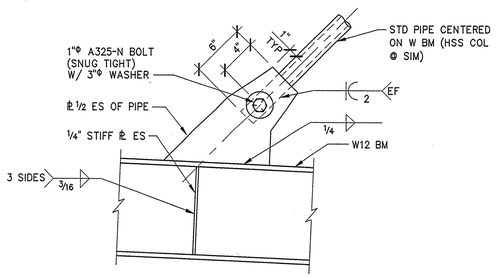

4 CANOPY DETAIL 1½"=1'-0"

DASSE DESIGN INC.
STRUCTURAL ENGINEERS
33 New Montgomery St., Suite 850
San Francisco CA 94105
415/243-8400 – Fax 415/243-9165

DIABLO VALLEY COLLEGE

DIABLO VALLEY COLLEGE NEW BOOKSTORE

321 GOLF CLUB RD.
PLEASANT HILL, CALIFORNIA

REGISTERED PROFESSIONAL ENGINEER WILLIAM K. ANDREWS No. 6776 Exp. 3-31-06 STRUCTURAL STATE OF CALIFORNIA

DATE: 23 JULY, 2004

REVISIONS:

BID SET

FOR PLAN REVIEW ONLY

SHEET TITLE:
STEEL DETAILS

IDENTIFICATION STAMP
DIVISION OF THE STATE ARCHITECT
105925
APPL 01
AC ____ FLS ____ SS AP
DATE: 5-12-04 JUL 26 2004

BLDG. ID: 098
ID CODE: 312098-109.01-A

DRAWN BY: BH
CHECKED BY: SAG
JOB NO: 03B197

SHEET S7.6

FILE: E:\2003 Jobs\03B197\struct\03B197S76.dwg05/05/04 at 1703
XREF: 03B197TB.dwg

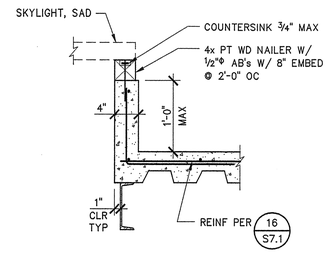

5 SKYLIGHT CURB AT ROOF

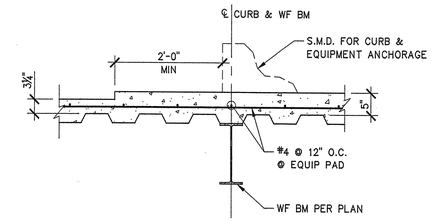

1 CONCRETE PAD AT MECH UNIT

3/4"=1'-0"

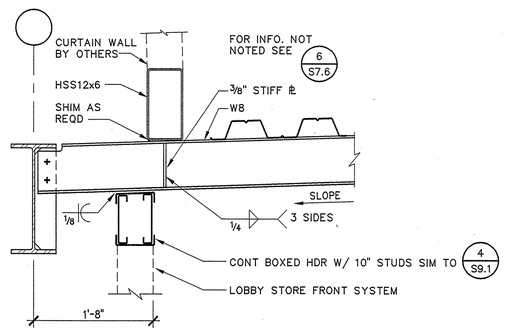

10 DETAIL

1"=1'-0"

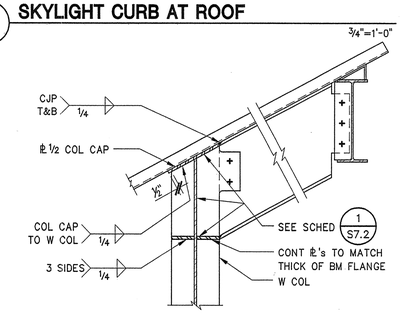

6 CANTILEVERED BEAM AT LOBBY ROOF

3/4"=1'-0"

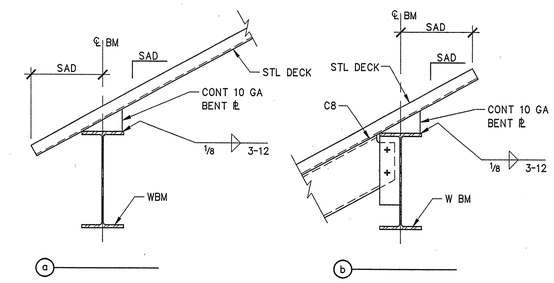

2 EDGE OF DECK AT SLOPED ROOF

1"=1'-0"

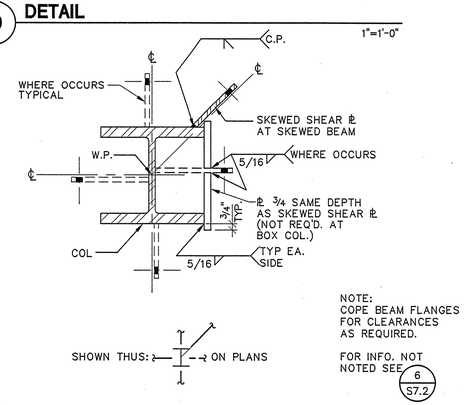

11 SKEWED BEAM TO WF COLUMN CONNECTION

1"=1'-0"

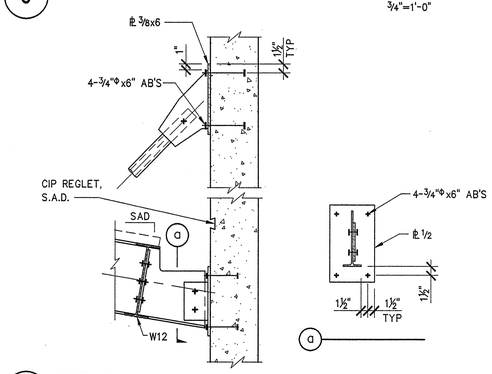

7 DETAIL

1"=1'-0"

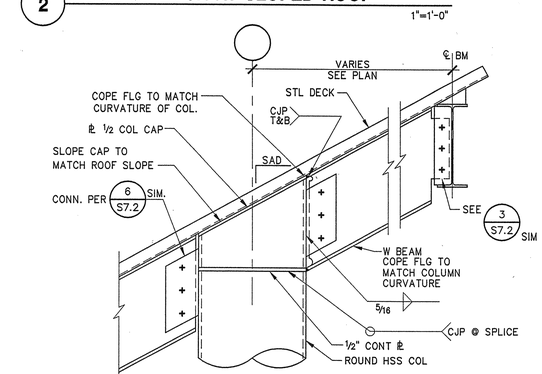

3 LOBBY ROOF FRAMING DETAIL

1"=1'-0"

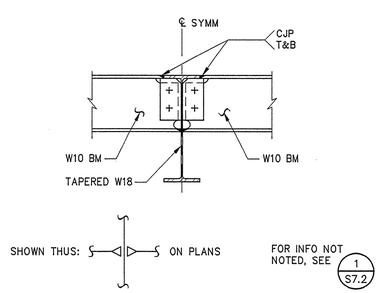

12 CANTILEVERED BEAM TO BEAM CONNECTION

1"=1'-0"

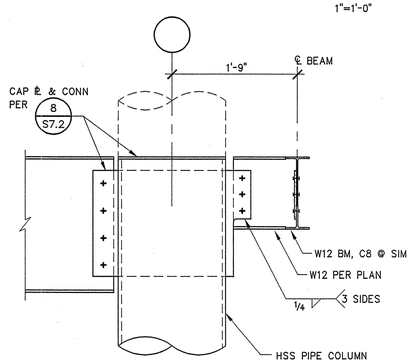

8 CANTILEVERED BEAM AT ROUND HSS COLUMN

1"=1'-0"

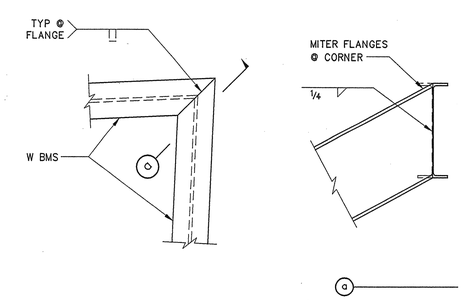

4 LOBBY ROOF FRAMING DETAIL

1"=1'-0"

DASSE DESIGN INC.
STRUCTURAL ENGINEERS
33 New Montgomery St., Suite 850
San Francisco CA 94105
415/243-8400 – Fax 415/243-9165

DIABLO VALLEY COLLEGE

DIABLO VALLEY COLLEGE NEW BOOKSTORE

321 GOLF CLUB RD.
PLEASANT HILL, CALIFORNIA

REGISTERED PROFESSIONAL ENGINEER WILLIAM ANDREWS S 3[illegible] Exp. 3-31-06 STRUCTURAL STATE OF CALIFORNIA

DATE: 23 JULY 2004

REVISIONS:

BID SET

FOR PLAN REVIEW ONLY

SHEET TITLE:
STEEL DETAILS

IDENTIFICATION STAMP
DIVISION OF THE STATE ARCHITECT
105925
APPL 01
AC ✓ FLS ✓ SS AS
DATE: 5-12-04 JUL 26 2004

BLDG. ID: 098
ID CODE: 312098-109.01-A

DRAWN BY: BH
CHECKED BY: SAG
JOB N03B197

SHEET S7.7

FILE: E:\2003 Jobs\03B197\structure\03B197S77.dwg05/05/04 at 16:08
XREF: 03B197TB.dwg

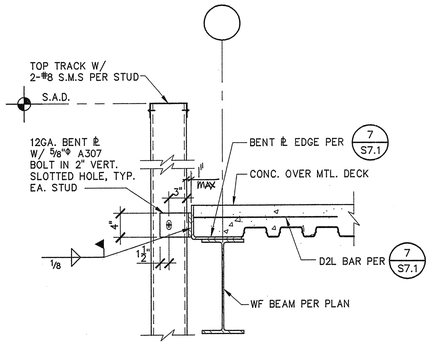

10 DETAIL

1"=1'-0"

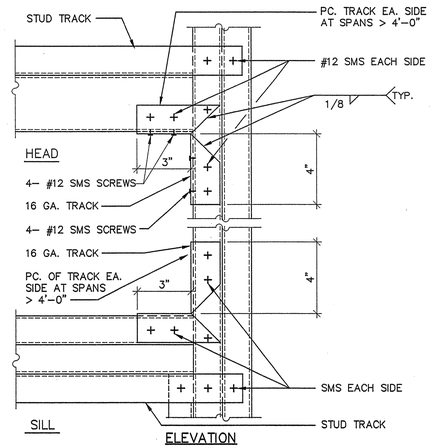

7 HEAD & SILL DETAILS AT JAMB

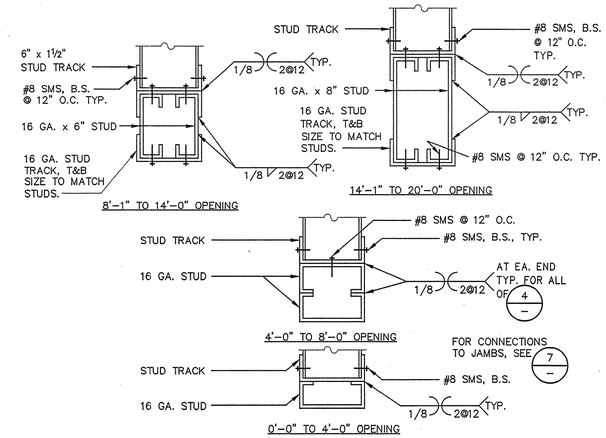

4 TYP. HEADER SCHEDULE

1. ALL STUDS AND TRACKS SHALL BE FORMED FROM STANDARD COMMERCIAL STEEL ASTM A570, WITH A MINIMUM YIELD POINT OF 33,000 PSI FOR MATERIAL 18 GAUGE AND THINNER AND 50,000 PSI FOR MATERIAL 16 GAUGE AND THICKER.
2. ALL FRAMING COMPONENTS SHALL BE CUT SQUARELY OR ON AN ANGLE (SUCH AS BRACING) TO SQUARELY FIT AGAINST ABUTTING MEMBERS. MEMBERS SHALL BE HELD FIRMLY IN POSITION UNTIL PROPERLY FASTENED.
3. STUDS AND TRACKS SHALL BE ATTACHED BY WELDING AND SELF DRILLING SCREWS AS NOTED ON THE DRAWINGS.
4. BUTT WELDS OR SPLICES SHALL BE USED AT ALL JOINTS IN TRACK. SPLICES IN STUDS OR BRACES SHALL NOT BE PERMITTED. ALL WELDS SHALL BE FILLET PLUG, BUTT OR SEAM WELDS. WHERE STUDS ARE BURNED THROUGH BY WELDING, PROVIDE SUITABLE STITCH PLATE OF SAME GAUGE.
5. STEEL STUDS SHALL BE AS MANUFACTURED BY MEMBER OF SSMA (STEEL STUD MANUFACTURER'S ASSOCIATION). (CBO #ER-4943P. MINIMUM STUD PROPERTIES SHALL BE AS LISTED IN TABLE BELOW. MAXIMUM STUD SPACING IS 16" O.C. UNLESS OTHERWISE NOTED.

STUD PROPERTIES						
SSMA SECTION	STUD DEPTH (IN)	GAGE	FLANGE WIDTH (IN)	Ix (IN^4)	Sx (IN^3)	GRADE (KSI)
600S162-54	6	16	1⅝	2.860	0.953	50
800S162-54	8	16	1⅝	5.736	1.434	50

TRACK PROPERTIES						
SSMA SECTION	STUD DEPTH (IN)	GAGE	FLANGE WIDTH (IN)	Ix (IN^4)	Sx (IN^3)	GRADE (KSI)
600T150-54	6	16	1½	2.611	0.843	50
600T200-68	6	14	2	3.990	1.277	50
800T150-54	8	16	1½	5.214	1.272	50
800T200-68	8	14	2	7.786	1.888	50

6. RUNNER TRACKS SHALL BE 16 GA. UNLESS OTHERWISE NOTED. TRACKS SHALL BE FASTENED TO STRUCTURE AT 32" O.C. MAXIMUM UNLESS OTHERWISE NOTED.
7. PROVIDE BLOCKING OF WALL STUDS AT 3'- 6" O.C. MAXIMUM PER DETAIL 2/– THIS SHEET, WHERE SHEATHING IS NOT PRESENT ON BOTH SIDES OF STUDS.
8. STEEL STUDS SHALL BE COORDINATED WITH BACKING PLATES AND ALL OTHER ARCH. REQUIREMENTS, GLAZING MANUFACTURER, MECHANICAL, ELECTRICAL AND ALL OTHER TRADES. SEE GENERAL NOTES ON S1.01.

1 STEEL STUD NOTES

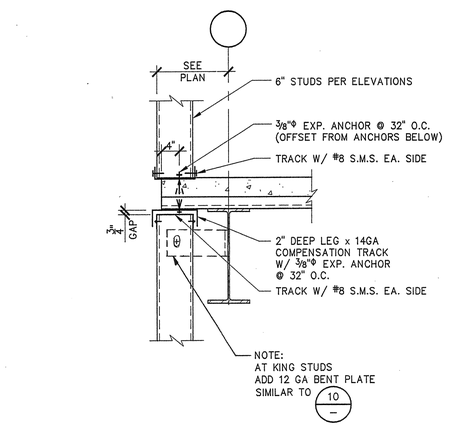

11 DETAIL

1"=1'-0"

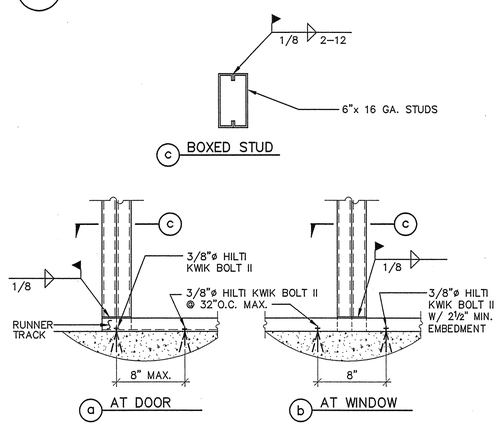

8 BOXED STUD JAMB BASE SIMILAR AT TOP

1 1/2"=1'-0"

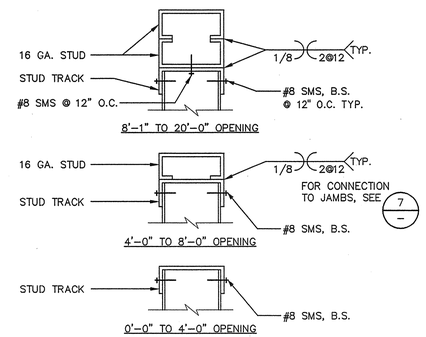

5 TYPICAL SILL SCHEDULE

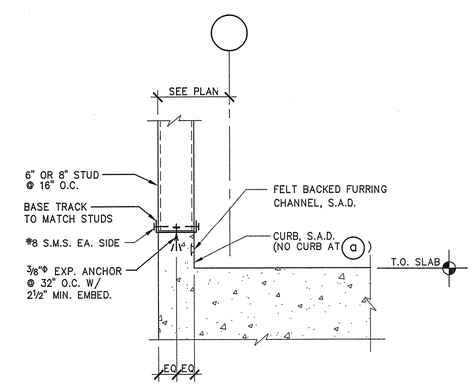

12 TYPICAL BASE TRACK CONNECTION

1"=1'-0"

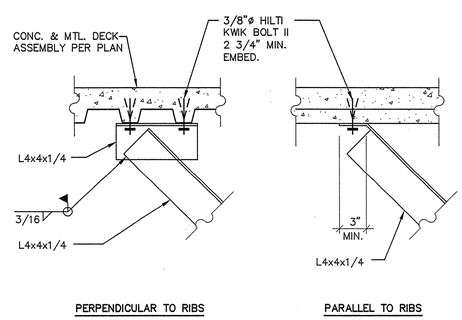

9 BRACE AT METAL DECK

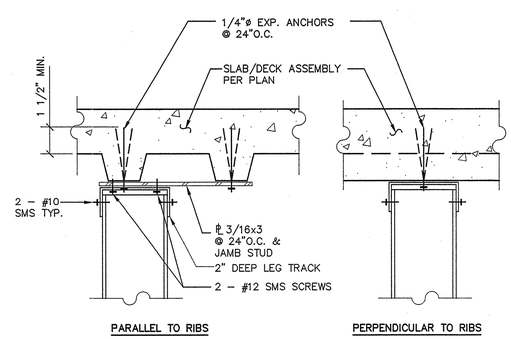

6 SOFFIT SUPPORT DETAIL

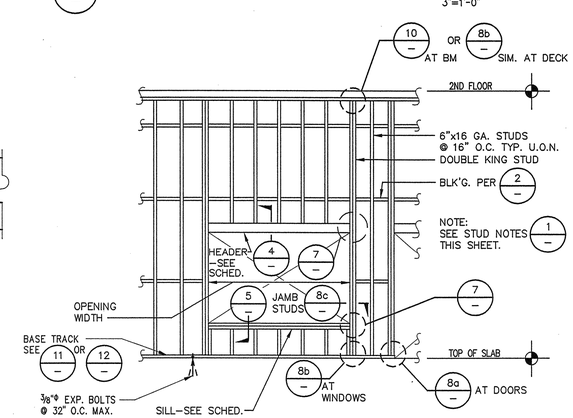

3 TYPICAL EXTERIOR WALL FRAMING

1/4"=1'-0"

2 STUD BLOCKING

3"=1'-0"

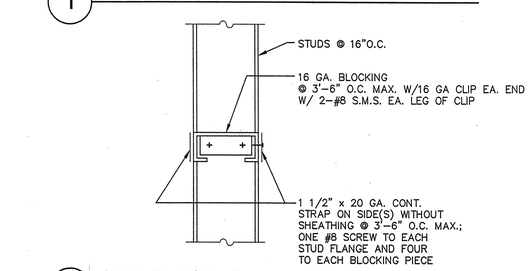

DASSE DESIGN INC.
STRUCTURAL ENGINEERS
33 New Montgomery St., Suite 850
San Francisco CA 94105
415/243-8400 – Fax 415/243-9165

DIABLO VALLEY COLLEGE

DIABLO VALLEY COLLEGE NEW BOOKSTORE

321 GOLF CLUB RD.
PLEASANT HILL, CALIFORNIA

REGISTERED PROFESSIONAL ENGINEER
WILLIAM A. DREWS
Exp. 3-31-06
STRUCTURAL
STATE OF CALIFORNIA

DATE: 23 JULY 2004

REVISIONS:

BID SET

FOR PLAN REVIEW ONLY

SHEET TITLE:
TYPICAL EXTERIOR STEEL STUD DETAILS

IDENTIFICATION STAMP
DIVISION OF THE STATE ARCHITECT
APPL 01 105925
AC ___ FLS ___ SS ___
DATE: 5-12-04 JUL 2 6 2004

BLDG. ID: 098
ID CODE: 312098-109.01-A

DRAWN BY: BH
CHECKED BY: SAG
JOB NO: 03B197

SHEET S9.1

FILE: E:\2003 Jobs\03B197\struct\03B197S91.dwg05/03/04 at 08:49
XREF: E:\2003 Jobs\03B197\struct\03B197TB.dwg

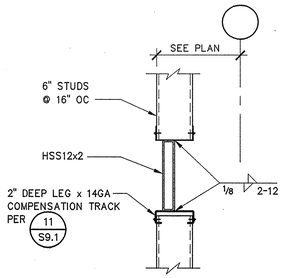

5 **DETAIL**

1"=1'-0"

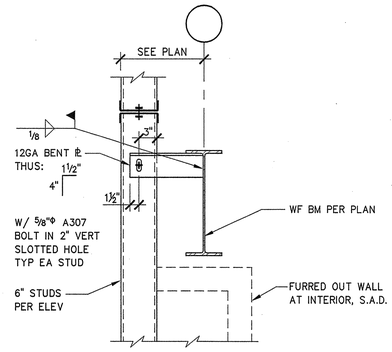

6 **DETAIL**

1"=1'-0"

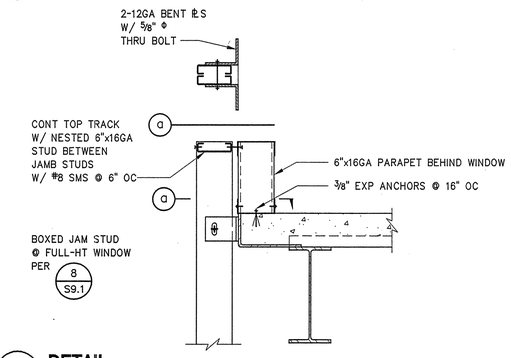

7 **DETAIL**

1"=1'-0"

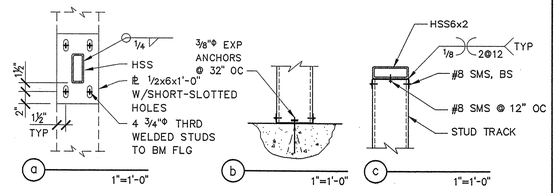

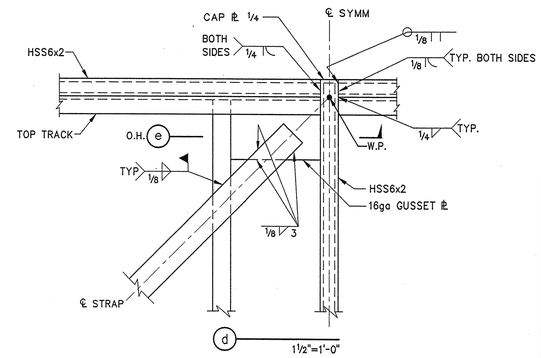

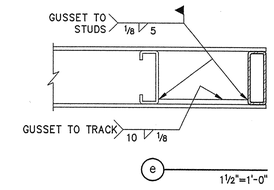

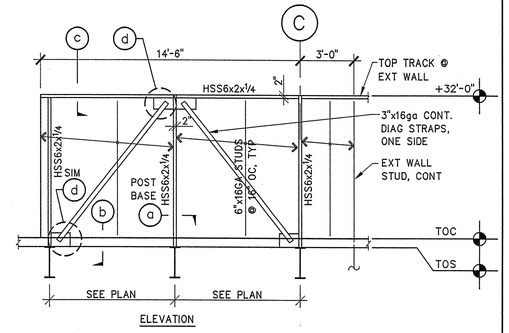

3 **ROOF SCREEN FRAME**

1/4"=1'-0"

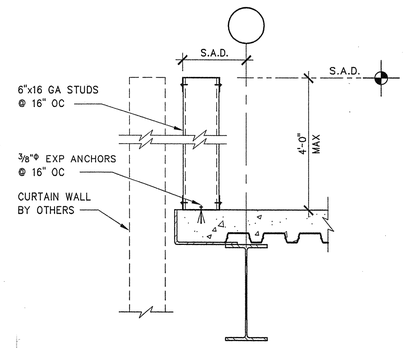

4 **DETAIL**

1"=1'-0"

DASSE
DESIGN INC.
STRUCTURAL ENGINEERS
33 New Montgomery St., Suite 850
San Francisco CA 94105
415/243-8400 – Fax 415/243-9165

DIABLO VALLEY COLLEGE

DIABLO VALLEY COLLEGE NEW BOOKSTORE

321 GOLF CLUB RD.
PLEASANT HILL, CALIFORNIA

REGISTERED PROFESSIONAL ENGINEER
WILLIAM ANDREWS
S 3773
Exp. 3-31-06
STRUCTURAL
STATE OF CALIFORNIA

DATE: 23 JULY, 2004

REVISIONS:

BID SET

FOR PLAN REVIEW ONLY

SHEET TITLE:

EXTERIOR STEEL STUD DETAILS

IDENTIFICATION STAMP
DIVISION OF THE STATE ARCHITECT
105925
APPL 01
AC ____ FLS ____ SS AR
DATE: 5-12-04 JUL 26 2004

BLDG. ID: 098
ID CODE: 312098-109.01-A

DRAWN BY: BH
CHECKED BY: SAG
JOB NO: 03B197

SHEET
S9.2

FILE: E:\2003 Jobs\03B197\struct\03B197S92.dwg05/03/04 at 11:59
XREF: E:\2003 Jobs\03B197\struct\03B197TB.dwg

DUCT LEGEND

DOUBLE LINE	DESCCIPTION	SINGLE LINE
20X12	RECTANGULAR DUCT FIRST FIGURE IS SIDE SHOWN	20X12
12ø	ROUND DUCT	12ø
20/12	FLAT OVAL DUCT FIRST FIGURE IS SIDE SHOWN	20/12
20X12	RECTANGULAR DUCT WITH ACOUSTICAL LINING	20X12
12ø	FLEXIBLE DUCT	12ø
	RECTANGULAR DUCT SECTION, UP SUPPLY AIR	
	RECTANGULAR DUCT SECTION, DOWN SUPPLY AIR	
	RECTANGULAR DUCT SECTION, UP RETURN AIR	
	RECTANGULAR DUCT SECTION, DOWN RETURN AIR	
	RECTANGULAR DUCT SECTION, UP EXHAUST AIR	
	RECTANGULAR DUCT SECTION, DOWN EXHAUST AIR	
	ROUND DUCT SECTION, UP	
	ROUND DUCT SECTION, DOWN	
	90° ELBOW, RECTANGULAR	
	90° ELBOW, RECTANGULAR WITH TURNING VANES	TV
	90° ELBOW, RECTANGULAR WITH TURNING VANES	TV
	90° ELBOW, ROUND	
	45° ELBOW, RECTANGULAR	
	45° ELBOW, RECTANGULAR	
	OFFSET, RECTANGULAR	
UP	CHANGE IN ELEVATION UP OR DN IN DIRECTION OF FLOW	UP
DN	CHANGE IN ROUND UP OR DN IN DIRECTION OF FLOW	DN
	ECCENTRIC TRANSITION	
	CONCENTRIC TRANSITION	
	RECTANGULAR TO ROUND TRANSITION	
	RECTANGULAR TEE	
	RECTANGULAR TEE, ECCENTRIC CONNECTION	
	CONICAL TEE	
	CONICAL WYE	

DOUBLE LINE	DESCCIPTION	SINGLE LINE
FSD	FIRE SMOKE DAMPER PROVIDE ACCESS DOOR	FSD
SD	DUCT MOUNTED SMOKE DETECTOR	SD
SP	DUCT STATIC PRESSURE SENSOR	SP
	ACCESS DOOR HORIZONTAL–VERTICAL	
	FLEXIBLE CONNECTION	FC
C C	COOLING COIL	C C
H H	HEATING COIL	H H
	TERMINAL UNIT WITH REHEAT COIL	
	SQUARE CEILING DIFFUSER ROUND NECK, SUPPLY	
	SQUARE CEILING GRILLE ROUND NECK, RETURN	
	SQUARE CEILING GRILLE ROUND NECK, EXHAUST	
	RECTANGULAR CEILING DIFFUSER SQUARE NECK WITH ACOUSTICAL PLENUM, SUPPLY	
	SQUARE CEILING GRILLE SQUARE NECK WITH ACOUSTICAL PLENUM, RETURN	
	SQUARE CEILING GRILLE SQUARE NECK WITH ACOUSTICAL PLENUM, EXHAUST	
	ROUND CEILING DIFFUSER ROUND NECK	
	SIDEWALL SUPPLY REGISTER OR GRILLE	
	SIDEWALL RETURN OR EXHAUST REGISTER OR GRILLE	
	LINEAR SUPPLY DIFFUSER	
	LINEAR RETURN OR EXHAUST DIFFUSER	
	EXISTING DUCT TO BE REMOVED	
	END CAP	
	SPLITTER DAMPER	S
	OPPOSED BLADE DAMPER WITH MANUAL REGULATOR	
	PARALLEL BLADE DAMPER WITH MANUAL REGULATOR	
	VOLUME DAMPER, ROUND WITH MANUAL REGULATOR	
BDD	BACK–DRAFT DAMPER	BDD
M	PNEUMATIC DAMPER ACTUATOR	M
M	ELECTRIC DAMPER ACTUATOR	M
FD	FIRE DAMPER PROVIDE ACCESS DOOR	FD

CONTROL LEGEND

T	ZONE TEMPERATURE SENSOR (MNT. AT 4'–0" AFF, UON)
AI	ANALOG INPUT TO CONTROLLER
AO	ANALOG OUTPUT FROM CONTROLLER
DI	DIGITAL INPUT TO CONTROLLER
DO	DIGITAL OUTPUT FROM CONTROLLER
PF	30% PREFILTER
CF	CARBON FILTER
FF	95% FINAL FILTER
TE	TEMPERATURE SENSOR
DA	DAMPER ACTUATOR
DPS	DIFFERENTIAL PRESSURE SWITCH
HE	STATIC PRESSURE SENSOR
SD	SMOKE DETECTOR
NC	NORMALLY CLOSED

DRAWING CONVENTIONS

DETAIL INDICATOR

1 — DETAIL NUMBER
M–8 — SHEET NUMBER

EQUIPMENT DESIGNATOR

ACU — EQUIPMENT CODE
9 — ITEM NUMBER

AIR OUTLET DESIGNATOR

(QTY) CFM SIZE A
AIR FLOW
TAG
NECK SIZE (INCHES)
QUANTITY

SECTION DESIGNATOR

3 — DETAIL NUMBER
M–6 — DRAWING NUMBER
IF USED TAIL INDICATES LIMIT OF SECTION

REVISION DESIGNATOR

REVISED AREA
1 — REVISION NUMBER

PIPE SPECIALTIES

	ANCHOR
	ALIGNEMENT GUIDE
	EXPANSION JOINT
	FLEXIBLE CONNECTION
AAV	AUTOMATIC AIR VENT W/SOV
	WYE STRAINER W/BLOW DOWN VALVE AND HOSE CONN.
MAV	MANUAL AIR VENT
TH	THERMOMETER (USE DIAL TYPE)
PG	PRESSURE GAUGE W/GAGE COCK
TF	TEST FITTING (PETE'S PLUG)
	TERMAL WELL
	ORIFICE FLOW METER
	SLOPE DOWN
	HOSE CONNECTION
	THERMOMETER

PIPE LEGEND

SYMBOL	DESCRIPTION
CHWS OR R	CHILLED WATER SUPPLY/RETURN
HWS OR R	HEATING HOT WATER SUPPLY/RETURN
LPS	LOW PRESSURE STEAM
HPS	HIGH PRESSURE STEAM
CR	CONDENSATE RETURN
	EXISTING SUPPLY/RETURN PIPE

PRESSURE PIPE FITTING

	90° ELBOW
	45° ELBOW
	TEE
	CROSS
	TWO PIPES CROSSING NO CONNECTION
	ELBOW, OUTLET UP
	ELBOW, OUTLET DOWN
	TEE, OUTLET UP
	TEE, OUTLET DOWN
	TEE DOWN WITH RISER CONNECTION TO CROSSPIPE
	PIPE CAP
	FLANGED CONNECTION
	REDUCER CONCENTRIC
	REDUCER, ECCENTRIC (TOP FLUSH–WATER)
	REDUCER, ECCENTRIC (BOTTOM FLUSH–STEAM)

VALVES AND ACTUATORS

	BALANCING VALVE (BALL OR BUTTERFLY)
	GATE VALVE–SHUT–OFF VALVE (USE BALL VALVE, UON)
	CIRCUIT BALANCE VALVE
M	3–WAY AUTOMATIC CONROL VALVE
M	2–WAY AUTOMATIC CONROL VALVE
S	SOLENOID VALVE 2–WAY SHOWN
	GAS COCK
	PLUG VALVE WITH LEVEL HANDLE
	CHECK VALVE
	PRESSURE REGULATING VALVE
	SAFETY RELIEF VALVE OR TEMPERATURE & PRESSURE RELIEF VALVE
	GAGE COCK (NETTLE VALVE)
	GLOBE VALVE
	DIAPHRAGM VALVE
	SPECIAL VALVE, USE INDICATED
	UNION, SCREWED OR SOLDERED
	TRIPLE DUTY VALVE
	STEAM TRAP

NOTE: NOT ALL SYMBOLS OR ABBREVIATIONS APPLY

ABBREVIATIONS

+	POSITIVE VALUE
–	NEGATIVE VALUE
+/–	PLUS OR MINUS
#	NOMINAL DIAMETER, INCHES
□	SQUARE FEET
℄	CENTER LINE OF OBJECT
2W	2–WAY
3W	3–WAY
AAV	AUTOMATIC AIR VENT
ACU	AIR CONDITIONING UNIT
ACC	AIR COOLED CONDENSER
ACV	AUTOMATIC CONTROL VALVE
AD	ACCESS DOOR (DUCT)
AFF	ABOVE FINISHED FLOOR
AFG	ABOVE FINISHED GRADE
AHU	AIR HANDLING UNIT
AL	ALUMINUM
AL	ACOUSTICAL LINING
AMP	AMPERE
AS	AIR SEPARATOR
ASD	AREA TYPE SMOKE DAMPER
AP	ACCESS PANEL (CEILING OR WALL)
APD	AIR PRESSURE DROP, IWC
AVD	AUTOMATIC VOLUME DAMPER
BAS	BUILDING AUTOMATION SYSTEM
BD	BALANCING DEVICE (B&G CIRCUIT SETTER)
BDD	BACK DRAFT DAMPER
BOB	BOTTOM OF BEAM
BOD	BOTTOM OF DUCT
BHP	BRAKE HORSEPOWER
BOB	BOTTOM OF BEAM
BTU	BRITISH THERMAL UNIT
BTUH	BRITISH THERMAL UNIT PER HOUR
BV	BALANCING VALVE (BALL OR BUTTERFLY)
C	CONDENSER
CA	COMBUSTION AIR
CC	COOLING COIL
CD	CONDENSATE DRAIN
CEG	CEILING EXHAUST GRILLE
CER	CEILING EXHAUST REGISTER (W/OBD)
CFM	CUBIC FEET PER MINUTE
CFF	CAPPED FOR FUTURE
CHS	CHILLED WATER RETURN
CHR	CHILLED WATER SUPPLY
CKV	CHECK VALVE
CLG	COOLING
CLG	CEILING
CM	CENTIMETER
CRG	CEILING RETURN GRILLE
CRR	CEILING RETURN REGISTER (W/OBD)
CSG	CEILING SUPPLY DIFFUSER
CTE	CONNECT TO EXISTING
CU	COPPER
CU	CONDENSING UNIT
CV	CONTROL VALVE
CV	VALVE FLOW COEFFICIENT
CW	DOMESTIC COLD WATER PIPING
CWR	CONDENSER WATER RETURN
CWS	CONDENSER WATER SUPPLY
DB	SOUND POWER LEVEL, DECIBELS
DBT	DRY BULB TEMPERATURE, °F
DIA	NOMINAL DIAMETER
DL	DOOR LOUVER
DN	DOWN
DPT	DIFFERENTIAL PRESSURE TRANSMITTER
DDC	DIRECT DIGITAL CONTROLS
(E)	EXISTING
EA	EACH
EA	EXHAUST AIR
EADB	ENTERING AIR DRY BULB TEMPERATURE, °F
EAT	ENTERING AIR TEMPERATURE, °F
EAWB	ENTERING AIR WET BULB TEMPERATURE, °F
EF	EXHAUST FAN
EFF	EFFICIENCY
EMS	ENERGY MANAGEMENT SYSTEM
ENT	ENTERING
EQUIP	EQUIPMENT
EQ	EQUAL
ESP	EXTERNAL STATIC PRESSURE, IWC
EWT	ENTERING WATER TEMPERATURE, °F
EXH	EXHAUST
F	FIRE WATER PIPING
F	FAHRENHEIT
(F)	FUTURE
FAP	FIRE ALARM PANEL
FC	FLEXIBLE CONNECTION
FC	FLOOR CLEANOUT
FCU	FAN COIL UNIT
FD	FIRE DAMPER
FD	FLOOR DRAIN
FDC	FIRE DEPARTMENT CONNECTION
FSD	FIRE/SMOKE DAMPER
FF	FINISHED FLOOR
FFE	FINISHED FLOOR ELEVATION
FLA	FULL LOAD AMPS
FPF	FINS PER FOOT
FPI	FINS PER INCH
FPM	FEET PER MINUTE
FPS	FEET PER SECOND
FS	FLOW SWITCH
FS	FLOOR SINK
FT	FINNED TUBE RADIATOR
FU	FIXTURE UNITS
G	NATURAL GAS PIPING
GA	GAUGE
GC	GENERAL CONTRACTOR
GAL	GALLONS
GPM	GALLONS PER MINUTE
GV	GLOBE VALVE
GW	GREASE WASTE
H	HUMIDIFIER
H	HEIGHT
HB	HOSE BIBB
HC	HEATING COIL
HD	HEAD
HGT	HEIGHT
HP	HORSEPOWER
HPS	HIGH PRESSURE STEAM
HPCR	HIGH PRESSURE CONDENSATE RETURN
HR	HOUR
HTG	HEATING
HVAC	HEATING VENTILATING AND AIR CONDITIONING
HW	DOMESTIC HOT WATER PIPING (140°F)
HWR	HEATING HOT WATER RETURN
HWS	HEATING HOT WATER SUPPLY
HWT	TEMPERED HOT WATER PIPING (120°F)
ID	NOMINAL INSIDE DIAMETER, INCHES
INV	INVERT
IT	INTERNATIONAL TERMINAL
IW	INDIRECT WASTE PIPING
IWC	INCHES OF WATER COLUMN
IWG	INCHES OF WATER GAUGE
KW	KILOWATT
KWH	KILOWATT HOURS
L	NOMINAL LENGTH, INCHES
LADB	LEAVING AIR DRY BULB TEMPERATURE, °F
LAT	LEAVING AIR TEMPERATURE, °F
LAWB	LEAVING AIR WET BULB TEMPERATURE, °F
LBS	POUNDS
LF	LINEAR FEET
LCP	LOCAL CONTROL PANEL
LPCR	LOW PRESSURE CONDENSATE RETURN
LPS	LOW PRESSURE STEAM
LRA	LOCKED ROTOR AMPS
LRD	LINEAR RETURN DIFFUSER
LSD	LINEAR SUPPLY DIFFUSER
LWCO	LOW WATER CUT–OFF
LWT	LEAVING WATER TEMPERATURE, °F
MA	MAKE–UP AIR
MAU	MAKE–UP AIR UNIT
MAV	MANUAL AIR VENT
MAX	MAXIMUM
MBH	ONE THOUSAND BTUH
MCA	MINIMUM CIRCUIT AMPACITY
MCC	MOTOR CONTROL CENTER
MFR	MANUFACTURER
MIN	MINIMUM
MPCR	MEDIUM PRESSURE CONDESATE RETURN
MPS	MEDIUM PRESSURE STEAM
MS	MOTOR STARTER
MTL	METAL
(N)	NEW
NC	NOISE CRITERIA
NIC	NOT IN CONTRACT
NFA	NET FREE AREA, SQ.FT.
NMC	NOT IN MECHANICAL CONTRACT
NO	NORMALLY OPEN
NPW	NON–POTABLE WATER PIPING
NTS	NOT TO SCALE
OA	OUTSIDE AIR
OADB	OUTSIDE AIR DRY BULB TEMPERATURE, °F
OAT	OUTSIDE AIR TEMPERATURE, °F
OAWB	OUTSIDE AIR WET BULB TEMPERATURE, °F
OBD	OPPOSED BLADE DAMPER
OC	ON CENTER
OD	NOMINAL OUTSIDE DIAMETER, INCHES
OF	OVERFLOW RAINWATER PIPING
P	PUMP
PD	PRESSURE DROP, POUNDS PER SQUARE INCH
PG	PRESSURE GAUGE
PHC	PREHEAT COIL
PM	PLEATED MEDIA
POC	POINT OF CONNECTION
PRV	PRESSURE REDUCING VALVE
PSIG	POUNDS PER SQUARE INCH GAUGE
PTAC	PACKAGED TERMINAL AIR CONDITIONER
R	RADIUS
(R)	RELOCATE
RA	RETURN AIR
RD	ROOF DRAIN
RADB	RETURN AIR DRY BULB TEMPERATURE, °F
RAWB	RETURN AIR WET TEMPERATURE, °F
REFRIG	REFRIGERANT
RF	RETURN FAN
RH	RELATIVE HUMIDITY
RHC	REHEAT COIL
RLA	RUNNING LOAD AMP
RPBP	REDUCED PRESSURE BACKFLOW PREVENTER
RPM	REVOLUTIONS PER MINUTE
RV	RELIEF VALVE
RWL	RAINWATER LEADER PIPING
S	SANITARY SOIL PIPING
SA	SUPPLY AIR
SADB	SUPPLY AIR DRY BULB TEMPERATURE, °F
SAT	SUPPLY AIR TEMPERATURE, °F
SAWB	SUPPLY AIR WET BULB TEMPERATURE, °F
SCD	SECONDARY CONDENSATE DRAIN
SHT	SHEET
SF	SUPPLY FAN
SFIA	SAN FRANCISCO INTERNATIONAL AIRPORT
SIM	SIMILAR
SOV	SHUT–OFF VALVE
SP	STATIC PRESSURE, IWC
SP	SPRINKLER
SQ FT	SQUARE FOOT
ST	SOUND TRAP (DUCT)
STL	STEEL
SRV	SAFETY RELIEF VALVE
TA	TRANSFER AIR
TF	TEST FITTING (PETER'S PLUG)
TEMP	TEMPERATURE
T'STAT	THERMOSTAT
TCP	TEMPERATURE CONTROL PANEL
TDH	TOTAL DYNAMIC HEAD
TH	THERMOMETER (DIAL TYPE)
TOD	TOP OF DUCT
TON	12,000 BTUH OF RERRIGERATION
TP	TOTAL PRESSURE, IWC
TPRV	TEMPERATURE & PRESSURE RELIEF VALVE
TSP	TOTAL STATIC PRESSURE, IWC
TU	TERMINAL UNIT
TV	TURNING VANE
TYP	TYPICAL
UC	UNDER CUT (DOOR)
UON	UNLESS OTHERWISE NOTED
V	VENT PIPING
VAV	VARIABLE AIR VOLUME
VD	VOLUME DAMPER (MANUAL)
VIB	VIBRATION ISOLATOR
VIF	VERIFY IN FIELD
VP	VELOCITY PRESSURE, IWC
VVT	VARIABLE VOLUME & TEMPERATURE
W/	WITH
W	NOMINAL WIDTH, INCHES
W	WATTS
W	WASTE PIPING
WB	WET BULB TEMPERATURE, °F
WCO	WALL CLEANOUT
WEG	WALL EXHAUST GRILLE
WER	WALL EXHAUST REGISTER (W/OBD)
WHA	WATER HAMMER ARRESTOR
WPD	WATER PRESSURE DROP, FTWG
WSG	WALL SUPPLY GRILLE
WSR	WALL SUPPLY REGISTER (W/OBD)
WRG	WALL RETURN GRILLE
WRR	WALL RETURN REGISTER (W/OBD)

DRAWING INDEX

M0.1	LEGEND SYMBOLS AND ABBREVIATIONS
M0.2	GENERAL NOTES
M0.3	SCHEDULES
M0.4	SCHEDULES
M2.0	BASEMENT PLAN – HVAC
M2.1	FIRST FLOOR PLAN – HVAC
M2.2	SECOND FLOOR PLAN – HVAC
M2.3	ROOF PLAN – HVAC
M3.1	FIRST FLOOR PLAN – PIPING
M3.2	SECOND FLOOR PLAN – PIPING
M4.1	DETAILS
M4.2	DETAILS
M4.3	DETAILS
M4.4	DETAILS
M5.1	SECTIONS
M6.1	PIPING DIAGRAMS
M7.1	TITLE 24 DOCUMENTATION
M7.2	TITLE 24 DOCUMENTATION

MECHANICAL DESIGN STUDIO *inc*
1777 Oakland Blvd. Suite 210
Walnut Creek, California 94596
tel 925. 210–0100
fax 925. 210–0144
www.mds–sf.com
PROJECT # 23087.00

REGISTERED PROFESSIONAL ENGINEER DOREL ANGHEL No. M 26561 EXP. 9/30/06 MECHANICAL STATE OF CALIFORNIA

DIABLO VALLEY COLLEGE

DIABLO VALLEY COLLEGE NEW BOOKSTORE

321 GOLF CLUB RD.
PLEASANT HILL, CALIFORNIA

DATE: 23 JULY, 2004

BID SET

SHEET TITLE:

LEGEND SYMBOLS AND ABBREVIATIONS

IDENTIFICATION STAMP
DIVISION OF THE STATE ARCHITECT
105925
APPL 01
AC LE FLS EO SS A-1
DATE: 5-12-04 JUL 26 2004

BLDG. ID: 098
ID CODE: 312098–109.01–A

DRAWN BY: JLW/LK
CHECKED BY: DA
JOB NO: 0307

SHEET M0.1

07/19/04 10:28:44 AM F:\C_23000\23087.00 DVC NEW BOOKSTORE\DRAWINGS\23087M01.DWG jeff

GENERAL NOTES

1. ENTIRE INSTALLATION SHALL CONFORM TO THE REQUIREMENTS OF THE 2001 CALIFORNIA MECHANICAL CODE, CALIFORNIA BUILDING CODE, AND ALL OTHER APPLICABLE CODES AND REGULATIONS.

2. FURNISH ALL LABOR, MATERIALS, TRANSPORTATION, AND PERFORM ALL REQUIRED OPERATIONS TO PROVIDE COMPLETE AND OPERABLE MECHANICAL SYSTEM, IN ACCORDANCE WITH THE FULL INTENT AND MEANING OF THE DRAWINGS AND SPECIFICATIONS AND PER STANDARD TRADE PRACTICES.

3. DRAWINGS ARE DIAGRAMMATIC AND NOT ALL DUCT OR PIPING OFFSETS ARE NECESSARILY SHOWN. DUCT SIZES ARE MINIMUM REQUIRED FOR AIR FLOW. THE CONTRACTOR SHALL PROVIDE ALL NECESSARY DUCT OFFSETS AND CHANGE RATIO/SHAPE (MAINTAIN EQUIVALENT AREAS) OF DUCTS AS REQUIRED IN ORDER TO CLEAR THE WORK OF ALL OTHER TRADES AND FIT IN THE CEILING SPACES PROVIDED (OR BE MOUNTED AS HIGH AS POSSIBLE IN AREAS WITHOUT CEILINGS).

4. PRIOR TO BID, DETERMINE ALL OF THE ELECTRICAL REQUIREMENTS ASSOCIATED WITH THE FULL EXTENT OF MECHANICAL SCOPE OF WORK INCLUDING (BUT NOT LIMITED TO) LINE VOLTAGE CONTROL POWER CONNECTIONS, DUCT MOUNTED SMOKE DETECTORS, FIRES-SMOKE DAMPERS AND FIRE ALARM INTERLOCK WIRING, ETC.. SUBMIT ALL OF THIS INFORMATION TO THE GENERAL CONTRACTOR PRIOR TO BID. NO CHANGE ORDERS WILL BE ALLOWED AS A RESULT OF THE MECHANICAL CONTRACTOR FAILING TO FOLLOW THIS REQUIREMENT.

5. ALL EQUIPMENT SHALL BE INSTALLED IN STRICT ACCORDANCE WITH THE EQUIPMENT MANUFACTURER'S RECOMMENDATIONS. CONTRACTOR TO PROVIDE ALL FITTINGS, TRANSITIONS, DAMPERS, VALVES, AND OTHER DEVICES REQUIRED FOR A COMPLETE WORKABLE INSTALLATION.

6. PROVIDE FIRE DAMPERS AND/OR FIRE-SMOKE DAMPERS AT ALL PENETRATIONS THROUGH FIRE RATED WALLS AND FLOOR/CEILING AS REQUIRED BY, AND TO COMPLY WITH, C.B.C. SECTION 713. DAMPERS SHALL BE INSTALLED STRICTLY PER MANUFACTURER'S INSTRUCTIONS AND THEIR UL LISTING. PROVIDE ASSOCIATED ACCESS PANELS.

7. UNLESS REQUIRED TO HAVE FIRE DAMPERS OR COMBINATION FIRE AND SMOKE DAMPERS (SEE GENERAL NOTE NO. 6 ABOVE), ALL DUCT PENETRATIONS OF FIRE-RATED WALLS ARE TO BE FIRE-STOPPED WITH UL LISTED/APPROVED FIRE-STOPPING CONSISTENT WITH THE MATERIALS AND CONSTRUCTION OF EACH PARTICULAR CONDITION. SEE ARCHITECTURAL DRAWINGS FOR LOCATIONS AND EXTENT OF RATING - VERIFY WITH GENERAL CONTRACTOR.

8. PROVIDE UL LISTED/APPROVED THROUGH PENETRATION FIRE-STOPPING AT ALL PIPE AND CONDUIT PENETRATIONS OF FIRE RATED WALLS. SEE ARCHITECTURAL DRAWINGS FOR LOCATIONS AND EXTENT OF RATINGS - VERIFY WITH GENERAL CONTRACTOR. FIRE-STOP MATERIAL SHALL BE A TESTED ASSEMBLY APPROVED BY THE STATE FIRE MARSHALL AND SHALL MATCH THE ACTUAL ASSEMBLY BEING PENETRATED.

9. ISOLATE ALL DUCT OR PIPE PENTRATIONS OF ALL NON-RATED FULL HEIGHT WALLS WITH NON-HARDENING ACOUSTICAL CAULKING.

10. DUCTWORK SHALL BE INSULATED PER THE REQUIREMENTS OF C.M.C., TITLE 24, THE PROJECT SPECIFICATIONS OR AS NOTED ON DRAWINGS (COMPLY WIHT THE MOST STRINGENT REQUIREMENT).

11. ALL PIPING SHALL BE INSULATED IN ACCORDANCE WITH THE REQUIREMENTS OF THE PROJECT SPECIFICATIONS, THE CURENT C.M.C. AND TITLE 24 - COMPLY WITH MOST STRINGENT.

12. ALL DUCTWORK SHALL BE CONSTRUCTED, INSTALLED AND SEALED IN ACCORDANCE WITH THE MOST STRINGENT OF LOCAL REGULATIONS, PROCEDURES DETAILED IN THE ASHRAE HANDBOOK OF FUNDAMENTALS, CHAPTER 6 OF THE C.M.C., THE LATEST SMACNA GUIDELINES OR PROJECT SPECIFICATIONS.

13. COORDINATE WORK WITH ALL OTHER TRADES AND JOB SITE CONDITIONS.

14. ALL EQUIPMENT SHALL BE INSTALLED WITH SUFFICIENT ACCESS TO CONTROLS, FILTERS, ELECTRIC MOTORS, ETC. CONTRACTOR SHALL COORDINATE WITH ALL OTHER TRADES TO ENSURE ACCESS IS MAINTAINED (SEE SPECIFICATIONS FOR REQUIRED COMPOSITE SHOP DRAWINGS). PROVIDE ACCESS PANELS WHERE REQUIRED.

15. THE MECHANICAL CONTRACTOR SHALL COORDINATE ALL FLOOR AND ROOF OPENING SIZES AND LOCATIONS AS WELL AS CURBS AND CONCRETE HOUSEKEEPING PAD SIZES AND LOCATIONS WITH THE GENERAL CONTRACTOR DURING SHOP DRAWING PHASE AND PRIOR TO FRAMING OR ASSOCIATED CONCRETE POURS.

16. ALL EQUIPMENT, DUCTS, PIPING, AND OTHER DEVICES AND MATERIAL INSTALLED OUTSIDE OF THE BUILDING OR OTHERWISE EXPOSED TO THE WEATHER SHALL BE COMPLETELY WEATHERPROOFED.

17. WHERE EQUIPMENT ANCHORAGE DETAILS ARE NOT SHOWN ON THE DRAWINGS, THE FIELD INSTALLATION SHALL BE SUBJECT TO THE APPROVAL OF THE ARCH/STRUCTURAL ENGINEER AND THE FIELD REPRESENTATIVE OF THE DIVISION OF THE STATE ARCHITECT.

18. THE MECHANICAL CONTRACTOR SHALL COORDINATE WITH GENERAL CONTRACTOR FOR ACCESS TO ALL DAMPERS AND EQUIPMENT.

19. NO PRODUCT WILL BE ACCEPTED ON THE JOB SITE WITHOUT PRIOR APPROVAL BY THE ARCHITECT. THE CONTRACTOR SHALL SUBMIT SHOP DRAWINGS AND CATALOG SHEETS OF ALL MECHANICAL EQUIPMENT AND MATERIALS THAT THE CONTRACTOR EXPECTS TO USE.

20. THE MECHANICAL CONTRACTOR SHALL COORDINATE ALL AIR OUTLETS WITH ARCHITECTURAL REFLECTED CEILING PLANS AND INTERIOR ROOM ELEVATIONS, AND ALL DUCTWORK AND PIPING LOCATIONS WITH WORK OF ALL OTHER TRADES BEFORE PROCEEDING WITH DUCTWORK FABRICATION AND INSTALLATION - SUBMIT COORDINATED SHOP DRAWINGS FOR APPROVAL.

21. VERIFY EXACT LOCATION AND MOUNTING HEIGHTS OF THERMOSTATS, TEMPERATURE SENSORS AND ALL OTHER WALL MOUNTED CONTROLS WITH ARCHITECT BEFORE INSTALLATION. IF NOT DIRECTED OTHERWISE, MOUNT ALL WALL MOUNTED CONTROL ELEMENTS AT 48" AFF.

22. ALL LINE AND LOW VOLTAGE CONTROL WIRING AND CONDUIT TO BE PROVIDED BY MECHANICAL CONTRACTOR UNLESS SPECIFICALLY CALLED OUT ON THE ELECTRICAL DRAWINGS AS BEING PROVIDED BY DIV. 16 (THIS NOTE SUPERSEDES ANY INDICATION, EITHER ON DRAWINGS OR IN SPECIFICATIONS - BIDDING MECHANICAL CONTRACTOR IS RESPONSIBLE FOR OBTAINING A SET OF ELECTRICAL DRAWINGS DURING BIDDING PHASE).

23. SEE DRAWING S1.0 FOR EXPANSION ANCHOR BOLT CRITERIA.

24. SPLIT-SYSTEM REFRIGERANT PIPING SHALL BE SIZED, INSTALLED AND INSULATED PER REFRIGERATION EQUIPMENT MANUFACTURER'S RECOMMENDATIONS AND INSTRUCTIONS.

25. DUCTWORK SHALL BE INSULATED PER SPECIFICATIONS OF AS NOTED ON DRAWINGS. ALL DUCT SIZES ARE INTERNAL DUCT SIZES. ALL DUCT JOINTS AND SEAMS SHALL BE SEALED PER SPECIFICATIONS. DO NOT INSULATE ANY EXPOSED TO VIEW DUCTWORK INSIDE BUILDING.

26. UON, MEDIUM PRESSURE SA BRANCH CONNECTIONS TO TERMINAL BOXES SHALL BE SAME SIZE AS BOX INLET CONNECTION. PROVIDE REDUCING TRANSITIONS AT BOX CONNECTION IF BRANCH DUCT SIZE IS LARGER THAN BOX INLET. ALL DUCT CONNECTIONS TO VAV BOX INLTES SHALL BE MADE WITH RIGID SHEET METAL (NO FLEXIBLE DUCT CONNECTOINS ALLOWED).

27. BRANCH CONNECTIONS TO ACOUSTICALLY LINED VAV TERMINAL BOX SA PLENUMS SHALL BE LOCATED AS FAR DOWNSTREAM FROM THE VAV DAMPER BOX AS POSSIBLE.

28. UON, BRANCH DUCT SIZES TO INDIVIDUAL AIR OUTLETS SHALL BE EQUAL TO THE AIR OUTLET NECK SIZE WHERE INDICATED TO BE ROUND. PROVIDE SHEET METAL PLENUMS WITH BRANCH DUCT SIDE CONNECTIONS WHERE AIR OUTLETS ARE INDICATED TO BE SQUARE OR WHERE OBSTRUCTIONS EXIST. SEE DETAIL 3/M4.2. INCLUDE ACOUSTICAL LINING INSIDE PLENUMS.

29. UON, CEILING RETURN AND EXHAUST GRILLES INDICATED WITH CENTER ROUND DUCT CONNECTIONS SHALL HAVE SAME NECK SIZES AS INDICATED FOR THEIR BRANCH DUCTS.

30. FLASH AND COUNTER FLASH ALL ROOF AND EXTERIOR WALL PENETRATIONS AS REQUIRED TO SEAL WEATHER TIGHT. (SEE ARCHITECTURAL DETAILS AND SPECIFICATIONS).

31. ALL VISIBLE INTERIOR PORTIONS OF DUCTWORK AND AIR TERMINALS SHALL BE PAINTED FLAT BLACK BY MECHANICAL CONTRACTOR.

32. ALL PIPES AND EQUIPMENT SHALL BE LABELED OR TAGGED CONFORMING TO PROJECT SPECIFICATIONS.

33. ALL PIPE AND DUCT INSULATION OR LINING SHALL HAVE A FLAME SPREAD OF NOT MORE THAN 25 AND SMOKE DEVELOPED RATING OF NOT MORE THAN 50 WHEN TESTED AS A COMPOSITE INSTALLATION INCLUDING INSULATION, FACING MATERIALS, TAPES AND ADHESIVES AS NORMALLY APPLIED.

34. (0) THE DDC CONTROL SYSTEM SHALL BE BY ANDOVER ONLY (DISTRICT STANDARD - NO SUBSTITUTIONS ALLOWED). CONTROLS CONTRACTOR SHALL FULLY RUN AND TEST THE CONTROL SYSTEM AND CERTIFY IT IN WRITING PRIOR TO FINAL ACCEPTANCE BY OWNER. ALL DATA WIRING SHALL BE INSTALLLED PER DISTRICT STANDARDS AND GURANTEED FOR 15 YEARS.

35. ALL DUCT MOUNTED SMOKE DETECTORS FOR AUTOMATIC SHUT-OFF OF AIR HANDLING EQUIPMENT SUPPLYING MORE THAN 2000 CFM SHALL BE FURNISHED BY DIVISION 16, ELECTRICAL, AND INSTALLED BY DIVISION 15, MECHANICAL. ASSOCIATED WIRING TO SHUT OFF EQUIPMENT SHALL BE PROVIDED BY DIVISION 15.

EQUIPMENT ANCHORAGE NOTES

ALL MECHANICAL EQUIPMENT, DUCTWORK AND PIPES SHALL BE BRACED AND ANCHORED TO RESIST SEISMIC FORCES PRESCRIBED IN CBC 2001, SECTION 1632A AND ASSOCIATED TABLES. SEE ANCHORAGE DETAILS ON DRAWINGS FOR THE SPECIFIC SPECIFIED EQUIPMENT. MECHANICAL CONTRACTOR IS RESPONSIBLE FOR PROVIDING ALL PERTINENT DETAILS AND ASSOCIATED CALCULATIONS FOR ALL SUBSTITUTED EQUIPMENT TO COMPLETELY ADDRESS SEISMIC RESTRAINT REQUIREMENTS FOR THE SPECIFIC PROJECT LOCATION - SUBMIT AS PART OF EQUIPMENT AND MATERIALS SUBMITTAL FOR REVIEW AND APPROVAL PRIOR TO INSTALLATION. ALL SUCH DETAILS AND CALCULATIONS SHALL BE STAMPED AND SIGNED BY A PROFESSIONAL STRUCTURAL ENGINEER REGISTERED IN THE STATE OF CALIFORNIA. VIBRATION ISOLATION MANUFACTURER'S DETAILS AND CALCULATIONS WILL BE ACCEPTABLE FOR VIBRATION ISOLATED EQUIPMENT AND PIPING. PRE-ENGINEERED/DSA OR ICBO PREAPPROVED DETAILS FOR RIGID DUCTWORK AND PIPING SUPPORTS AND BRACING FROM SMACNA, ISAT (INTERNATIONAL SEISMIC APPLICATION TECHNOLOGY) OR ANY HANGER MANUFACTURER SHALL ONLY BE USED IF IT IS DEMONSTRATED THAT SUCH SUPPORTS AND BRACING MEET THE SPECIFIC SEISMIC REQUIREMENTS OF THIS PROJECT. SEE SEISMIC DESIGN CRITERIA ON STRUCTURAL DRAWINGS FOR PROJECT SPECIFIC SEISMIC COEFFICIENTS TO BE USED TO DETERMINE THE ULTIMATE LOADS FROM EQUATIONS 32A-1, 32A-2 AND 32A-3. THESE LOADS CAN THEN BE DIVIDED BY 1.4 TO OBTAIN THE ALLOWABLE LOADS WHICH THE RESTRAINTS MUST BE ABLE TO WITHSTAND.

MECHANICAL DESIGN STUDIO inc
1777 Oakland Blvd. Suite 210
Walnut Creek, California 94596
tel 925. 210-0100
fax 925. 210-0144
www.mds-sf.com
PROJECT # 23087.00

REGISTERED PROFESSIONAL ENGINEER DOREL ANGHEL No. M 26561 EXP. 9/30/06 MECHANICAL STATE OF CALIFORNIA

DIABLO VALLEY COLLEGE

DIABLO VALLEY COLLEGE
NEW BOOKSTORE

321 GOLF CLUB RD.
PLEASANT HILL, CALIFORNIA

DATE: 23 JULY, 2004

(0) REVISIONS- 23 JULY, 2004

BID SET

SHEET TITLE:

GENERAL NOTES

IDENTIFICATION STAMP
DIVISION OF THE STATE ARCHITECT
APPL 01 105925
AC LE FLS ED SS A1
DATE: 5-12-04 JUL 2 6 2004

BLDG. ID: 098
ID CODE: 312098-109.01-A

DRAWN BY: JLW/LK
CHECKED BY: DA
JOB NO: 0307

SHEET M0.2

07/19/04 10:28:50 AM F:\C_23000\23087.00 DVC NEW BOOKSTORE\DRAWINGS\23087M02.DWG jeff

ROOF TOP PACKAGED AIR CONDITIONING UNIT SCHEDULE

MFR: TRANE "INTELLIPAK"

CODE	AREA SERVED	MODEL	NOM. CAP. (TONS)	NOM. EER	SUPPLY FAN				MIN. OA (CFM)	EXHAUST FAN				DX COOLING COIL							ELECT. DATA									FILTERS			MAX. OPER WT LBS (6)	REMARKS
					CFM	ESP(5) ("WC)	BHP	MOTOR H.P.		CFM	ESP ("WC)	BHP	MOTOR H.P.	GROSS TOTAL MBH	NET SENS. MBH(4)	ENT. DB	ENT. WB	LVG DB (3)	LVG WB(3)	AMB. DB	COMPRESSOR QTY	COMPRESSOR RLA	COMPRESSOR LRA	SUPPLY FAN FLA	EXHAUST FAN FLA	COND. FANS QTY	COND. FANS FLA	UNIT MCA	VOLTS/ø	TYPE	QTY.	EFF & SIZE		
AC-1	RETAIL (CONSTANT VOLUME)	SLHFC30	30	8.9	10,000	1.25	8.38	10	2,000 (10)	10,000	0.25	2.72	3	361.9	243.6	78.2	65.6	56.4	54.6	93.0	2	27.3 / 27.3	178 / 178	13.20	4.40	–	5.4	85.42	460/3	BAG	6 2	60% – 24X24X19 60% – 24X12X19	6200	(1)
AC-2	REMAINING AREAS (VAV)	SXHFC25	25	8.8	8,000	2.95	10.9	15	1,400	7,200	0.25	1.18	1-1/2	274.9	190.0	78.5	63.5	57.3	53.3	93.0	2	27.3 / 18.2	178 / 117	19.3	4.4	–	5.4	82.43	460/3	BAG	3 4	60% – 24X24X19 60% – 24X12X19	5440	(9)

NOTES:

(1) CONSTANT VOLUME UNIT – PROVIDE WITH EXTENDED CASING, 100% INTEGRATED AIR SIDE ECONOMIZER, 100% MODULATING EXHAUST FAN WITH SPACE PRESSURIZATION CONTROLS, HINGED ACCESS DOORS, "FROST-STAT" OR HOT GAS BY-PASS FOR LOW LOAD CONDITIONS, 253.0 MBH HOT WATER HEATING COIL AT 64.3° EAT AND 10.0 GPM OF 180° EWT, NIGHT SET-BACK/SET-UP FROM BUILDING EMS, TERMINALS FOR REMOTE OCCUPIED/UNOCCUPIED SIGNAL FROM BUILDING EMS, RETURN AIR MORNING WARM-UP SENSOR. CO2 SENSOR (TO BE UNIT OR RETURN AIR DUCT MOUNTED) AND "TRAQ" COMBINATION DAMPER AND AIR FLOW MONITOR, AND ASSOCIATION CONTROLS TO PROVIDE DEMAND CONTROL VENTILATION PER 2001 TITLE 24 SECTION 121-C-4 AND BAC-NET COMPATIBLE EMS INTERFACE.

(2) PROVIDE ALL UNITS WITH MASON MODEL RSC COMBINATION CURB/ISOLATOR WITH 3" DEFLECTION SPRINGS, INTEGRAL SEISMIC RESTRAINTS, CUSTOM HEIGHT TO ALLOW FOR CAVITY TO BE USED FOR RETURN PLENUM (SEE DETAILS ON DRAWINGS), RETURN AIR PLENUM CLOSURE PANEL, FLEXIBLE DUCT CONNECTION SUPPORTS, TAPERED BOTTOM TO MATCH ROOF SLOPE, AND "ACOUSTICAL DB PACKAGE" GRID LESS GYP. BOARD AS REQUIRED TO LINE BOTTOM OF UNIT WITH ACOUSTICAL LINER.

(3) DX COOLING COIL LEAVING AIR TEMPERATURES ARE DOWNSTREAM OF SUPPLY FAN (SUPPLY FAN MOTOR HEAT IS INCLUDED).

(4) SENSIBLE COOLING CAPACITY INCLUDES DEDUCT FOR SUPPLY FAN MOTOR HEAT.

(5) SUPPLY FAN ESP INCLUDES BOTH SUPPLY AND RETURN AIR DUCT LOSSES (AND AN ADDITIONAL 0.70" FOR LOADED FILTERS ON AC-2).

(6) UNIT WEIGHTS INCLUDE ALL ACCESSORIES EXCEPT VIBRATION ISOLATION AND SUPPORT FRAMES.

(7) SEE SPECIFICATIONS FOR ADDITIONAL REQUIREMENTS INCLUDING CONTROLS.

(8) ALL UNITS TO BE SHUT DOWN UPON DETECTION OF SMOKE AS REQUIRED BY CMC SECTION 608 (INSTALL DUCT MOUNTED TYPE SMOKE DETECTOR INSIDE DISCHARGE SUPPLY PLENUM OF EACH UNIT – DETECTORS SHALL ALSO BE MONITORED BY BUILDING'S FIRE ALARM SYSTEM – COORDINATE WITH ELECTRICAL CONTRACTOR).

(9) VAV UNIT – PROVIDE WITH EXTENDED CASING, 100% INTEGRATED AIR SIDE ECONOMIZER, 100% MODULATING EXHAUST FAN WITH SPACE PRESSURIZATION CONTROLS, CONTROLS FOR VAV APPLICATIONS INCLUDING UNIT INTERIOR MOUNTED VFD WITH BY-PASS SWITCH FOR SUPPLY AIR FAN, "FROST-STAT" OR HOT GAS BY-PASS FOR LOW LOAD CONDITIONS, HINGED ACCESS DOORS, RETURN AIR MORNING WARM-UP SENSOR AND ASSOCIATED RELAYS FOR SIGNALING VAV BOXES AND BAC-NET COMPATIBLE EMS INTERFACE.

(10) MINIMUM OUTSIDE AIR QUANTITY SETPOINT FOR DEMAND CONTROL VENTILATION – MINIMUM OUTSIDE AIR QUANTITY SHALL BE RESET VIA RETURN AIR CO2 SENSOR TO MAINTAIN CO2 LEVELS BELOW 800 PPM.

(11) ALL UNITS SHALL BE STARTED AND THOROUGHLY RUN-TESTED BY THE AC UNIT MANUFACTURER'S FACTORY TRAINED TECHNICIANS (START-UP BY MECHANICAL CONTRACTOR ALONE IS NOT ACCEPTABLE) – SUBMIT CERTIFIED START-UP REPORT BEFORE FINAL APPROVAL BY OWNER.

BOILER SCHEDULE

MFR: BRYAN DR SERIES

CODE	TYPE & MODEL	MBH INPUT	MBH OUTPUT	FLUID	WORKING PRESS PSIG	OPERATING PRESS PSIG	OPERATING TEMP °F	FUEL	OPER WT #	COMB. FAN (115V/1ø)	REMARKS
B-1	BRYAN FLEX WATER TUBE FORCED DRAFT DR 450	450	360	WATER	160 @ 250°F	30	180	NAT. GAS	1,320	1/3 HP	ALL NOTES APPLY

NOTES:
(1) CALIFORNIA CODE AND UL LABEL CONTROLS.
(2) 120V-1ø POWER REQUIRED FOR FORCED-DRAFT COMBUSTION AIR FAN AND CONTROLS.
(3) SINGLE STAGE GAS VALVE WITH ADJUSTABLE OPERATING TEMPERATURE DIFFERENTIAL.
(4) 60 PSI RELIEF VALVE.
(5) SEE SPECIFICATIONS FOR ADDITIONAL REQUIREMENTS.

EXPANSION TANK SCHEDULE

MFR: WESSELS

CODE	SYSTEM SERVED	MODEL & SIZE	DIMENSION DIA X H	TANK VOL GALLONS	ACCEPTANCE VOL. GALS.	INITIAL PRESS PSIG	FINAL PRESS PSIG	OPER WT#	REMARKS
ET-1	HEATING HOT WATER	NLA 85	16 X 37	23	23	40	60	282	ALL NOTES APPLY

NOTES: (1) PROVIDE WITH CALIFORNIA CODE SIGHT GLASS AND ASME STAMP.

PUMP SCHEDULE

MANUFACTURER: BELL & GOSSETT

CODE	SERVICE	TYPE	MODEL & SIZE	FLOW RATE (GPM)	TOTAL DYNAMIC HEAD (FT)	BHP	MOTOR HP	MOTOR RPM	MOTOR VOLTAGE	MOTOR PHASE	OPER WT #	REMARKS
P-1	HEATING HOT WATER	VERTICAL IN-LINE	SERIES 80 1-1/2 X 1-1/2 X 7B	21	57	0.75	1	1750	208	3	165	ALL NOTES APPLY
P-2	HEATING HOT WATER	VERTICAL IN-LINE	SERIES 80 1-1/2 X 1-1/2 X 7B	21	57	0.75	1	1750	208	3	165	ALL NOTES APPLY

NOTE(S):
(1) PROVIDE WITH GAUGE TAPPINGS AT SUCTION AND DISCHARGE FLANGES.
(2) EACH PUMP SIZED FOR 100% DUTY (PUMPS TO ALTERNATE OPERATION WITH EACH START SIGNAL VIA EMS).
(3) PROVIDE WITH MASON HD DOUBLE DEFLECTION NEOPRENE ISOLATOR HANGERS.

EXHAUST FAN SCHEDULE

MFR: GREENHECK (UON)

CODE	TYPE AND MODEL	CFM	S.P. "W.C.	BHP	MOTOR HP	MOTOR VOLT/PHASE	SERVICE	LOCATION	OPER WT #	CONTROL	SONES /RPM	REMARKS
EF-1	CENT. UPBLAST CUBE-121	1,100	0.25	0.11	1/4	110/1	RESTROOMS	ROOF	100	EMS	7.2	(1)
EF-2	CEILING SP-224	150	0.50	–	83 WATTS	110/1	UNISEX	CEILING	21	INTERLOCK W/ LIGHT SWITCH	4.6	(2)
EF-3	CENT. ROOF GB-101	800	0.50	0.13	1/4	110/1	ELEV. MACH. RM. 103	ROOF	100	LINE VOLTAGE T'STAT	6.6	(1)
EF-4	CENT. ROOF GB-101	800	0.50	0.13	1/4	110/1	CAFE	ROOF	100	EMS	6.6	(1)
EF-5	FC UTILITY SFB-9	650	1.0	0.23	1/3	110/1	BASEMENT ELEC. RM.	ROOF	120	LINE VOLTAGE T'STAT	1260	(3)
EF-6	SIDEWALL PROP. S1-12-432-B6	500	0.25	0.07	1/6	110/1	LOADING DOCK ELEV. MACH. RM.	ELEV. MACH. RM.	30	LINE VOLTAGE T'STAT	<4.8	(2) (4)
EF-7	CENT. ROOF G-060-D	100	0.25	0.02	1/60	110/1	JANITOR	ROOF	40	EMS	<3.7	(1) (2)
EF-8	SIDEWALL PROP. S1-14-440-B6	800	0.25	0.15	1/6	110/1	ELEV. NO. 1 MACH. RM.	ELEV. MACH. RM.	40	LINE VOLTAGE T'STAT	<7.3	(2) (4)

NOTE(S):
(1) PROVIDE WITH MFR'S BACKDRAFT DAMPER AND ROOF CURB WITH WOOD NAILER, NO CANT AND HEIGHT AS REQ'D TO CLEAR FINISHED ROOFING BY A MINIMUM OF 9".
(2) DIRECT DRIVE FAN – PROVIDE MFR'S SOLID STATE SPEED CONTROLLER. (MOUNT INSIDE FAN HOUSING)
(3) PROVIDE WITH WEATHER HOOD, OUTLET GUARD, PERMATECTOR FINISH INSIDE AND OUT, AND MASON SLR ISOLATION MOUNTS WITH MIN. 1" DEFLECTION SPRINGS AND INTEGRAL SEISMIC RESTRAINTS.
(4) PROVIDE WITH MOTOR SIDE GUARD.

MECHANICAL DESIGN STUDIO inc
1777 Oakland Blvd. Suite 210
Walnut Creek, California 94596
tel 925. 210-0100
fax 925. 210-0144
www.mds-sf.com
PROJECT # 23087.00

REGISTERED PROFESSIONAL ENGINEER DOREL ANGEL No. M 26561 EXP. 06/30/06 MECHANICAL STATE OF CALIFORNIA

DIABLO VALLEY COLLEGE

DIABLO VALLEY COLLEGE NEW BOOKSTORE

321 GOLF CLUB RD.
PLEASANT HILL, CALIFORNIA

DATE: 23 JULY, 2004

BID SET

SHEET TITLE:
SCHEDULES

IDENTIFICATION STAMP
DIVISION OF THE STATE ARCHITECT
105925
APPL 01
AC LE FLS EQ SS M
DATE: 5-12-04 JUL 26 2004

BLDG. ID: 098
ID CODE: 312098-109.01-A

DRAWN BY: JLW/LK
CHECKED BY: DA
JOB NO: 0307

SHEET
M0.3

07/19/04 10:28:57 AM F:\C_23000\23087.00 DVC NEW BOOKSTORE\DRAWINGS\23087M03.DWG jeff

MISCELLANEOUS EQUIPMENT SCHEDULE

CODE	DESCRIPTION
DSS IU	"MITSUBISHI" MODEL PK24EK NOMINAL 2.0 TON COOLING ONLY DUCTLESS SPLIT-SYSTEM INDOOR WALL MOUNTED FAN COIL UNIT WITH WIRED REMOTE CONTROLLER AND 0.9 FLA FAN MOTOR (2.0 AMP MIN. TOTAL UNIT AMPACITY AT 115 VOLT – 1ø POWER). OPERATING WEIGHT=69 LBS
DSS OU	"MITSUBISHI" MODEL PU24EK NOMINAL 2.0 TON COOLING ONLY DUCTLESS SPLIT-SYSTEM OUTDOOR CONDENSING UNIT WITH (2) 0.65 FLA FAN MOTORS, 11.5 RLA/ 54 LRA COMPRESSOR, 0.16 AMP CRANKCASE HEATER (16 AMP. MIN. TOTAL UNIT AMPACITY AT 208 VOLT-1ø POWER). PROVIDE WITH MASON 3/4" THICK THRU-BOLT SUPER "W" NEOPRENE ISOLATOR PADS. OPERATING WEIGHT=207 LBS
FSD	"RUSKIN" MODEL FSD36 (FSD60 WHERE UNDER 12" WIDE) COMBINATION FIRE-SMOKE DAMPER. UL555 CLASSIFIED AND UL555S LEAKAGE CLASS II RATED FOR HORIZONTAL AND VERTICAL INSTALLATIONS. PROVIDE WITH 110V-1 PHASE HOLD OPEN – NORMALLY CLOSED ACTUATOR, FUSIBLE LINK, END SWITCHES AND TWO MCP-10 COMMON REMOTE INDICATOR PANELS FOR ENTIRE PROJECT (SEE DETAIL 4/M4.4 FOR ADDITIONAL REQUIREMNTS).
GIH 1,2	"GREENHECK FABRA-HOOD" GRAVITY INTAKE HOOD WITH 22X22 NECK SIZE, BACKDRAFT DAMPER, BIRD SCREEN AND ROOF CURB WITH WOOD NAILER, NO CANT, TAPERED BOTTOM TO MATCH ROOF SLOPE AND HEIGHT AS REQ'D TO CLEAR FINISHED ROOFING BY 9". OPERATING WEIGHT=60 LBS
EH 1	"OMARK" WALL MOUNTED ELECTRICAL HEATER – MODEL 2516W, HEATER CAPACITY OF 5120 BTUH. HEATER COMPLETE WITH THERMOSTAT. 1500 WATTS; 12.5 AMPS., 120V/1ø. OPERATING WEIGHT=20 LBS

DUCT MOUNTED SILENCER/SOUND ATTENUATOR SCHEDULE

MFR: VIBRO-ACOUSTICS (UON)

TAG	MODEL #	SERVICE	CFM	FACE (1) VELOCITY (FPM)	SIZE WxHxL (2) (INCHES)	DYNAMIC INSERTION LOSS, DB/ GENERATED NOISE, DB/ BREAKOUT NOISE, DB 63	125	250	500	1K	2K	4K	8K	PRESSURE DROP (3) ("WC)	SEISMIC ANCHORAGE DETAIL	REMARKS
ST-1A	RELP-HV-F1	AC-1 SOUTH DUCT	4,840	+894	26X30 TO 36(42)X20 X ±149	11	28	41	50	50	49	38	31	0.19	NA (DUCT MNT'D)	10 GAUGE HTL CASING
						59	35	29	27	29	25	12	18			(5)
						32	35	38	41	44	45	45	45	0.21		
ST-1B	RELP-UHV-F8	AC-1 NORTH DUCT	5,160	+1055	30X26 TO 44(56)X16 X ±150	11	21	42	50	50	47	42	30	0.18	NA (DUCT MNT'D)	10 GAUGE HTL CASING
						59	38	27	27	28	22	10	16			(5)
						32	35	38	41	44	45	45	45	0.37		
ST-2A	RD-ULV-F2	AC-2 FIRST FLOOR	3500	+692	26X28 X ±44	8	15	21	23	31	26	20	16	0.24	NA (DUCT MNT'D)	
						52	44	37	34	38	39	33	29			(6)
						32	35	38	41	44	45	45	45	0.32		
ST-2B	RD-ULV-FA	AC-2 SECOND FLOOR	4500	+779	26X32 X ±44	9	16	22	22	29	24	19	16	0.27	NA (DUCT MNT'D)	
						55	47	40	36	41	42	36	31			(6)
						32	35	38	41	44	45	45	45	0.36		
ST-3	ICA-5LFM	VAV-8	2840	+631	12X18X60 24X18X60	10	13	24	29	28	17	13	13	0.08	NA (DUCT MNT'D)	"INDUSTRIAL ACOUSTICS CO."
						47	34	36	35	40	37	27	20			
														(4)		
ST-4	IAC-3LFM	VAV-9	870	+580	18X12X36	5	7	16	19	17	12	10	10	0.07	NA (DUCT MNT'D)	"INDUSTRIAL ACOUSTICS CO."
						47	34	36	35	40	37	27	20			
														(4)		
ST-5	IAC-3LFM	VAV-10	780	+520	18X12X36	5	7	16	19	17	12	10	10	0.05	NA (DUCT MNT'D)	"INDUSTRIAL ACOUSTICS CO."
						47	34	36	35	40	37	27	20			
														(4)		
ST-6	IAC-5LFM	VAV-11	945	+630	18X12X60	10	13	24	29	28	17	13	13	0.08	NA (DUCT MNT'D)	"INDUSTRIAL ACOUSTICS CO."
						47	34	36	35	40	37	27	20			
														(4)		

NOTES:
(1) (+) DESIGNATES FORWARD FLOW/(–) DESIGNATES REVERSE FLOW
(2) FIRST SET OF DIMENSIONS FOR TRANSITIONAL UNITS ARE FOR UNIT INLET, LENGTH IS MEASURED ALONG UNIT'S CENTERLINE AND OD OF EXTENDED WIDTH UNITS ARE IN PARENTHESES.
(3) — PRESSURE DROP OF SILENCER ALONE (UNDER IDEAL INLET AND OUTLET CONDITIONS).
— ESTIMATED PRESSURE DROP OF SILENCER WITH PROJECT SPECIFIC SYSTEM EFFECTS.
(4) ACTUAL PRESSURE DROP INCLUDING SYSTEM EFFECTS IS NOT REQUIRED.
(5) OFFSETTING TRANSITIONAL RECTANGULAR ELBOW SILENCER WITH EXTENDED SIDE PANELS – SEE DRAWINGS FOR CONFIGURATION.
(6) SEE DRAWINGS FOR UPSTREAM AND DOWNSTREAM CONDITIONS.
(7) VERIFY ALL UNITS WILL FIT IN AVAILABLE SPACE PRIOR TO ORDERING – SUBMIT AS PART OF SHOP DRAWING SUBMITTAL.

VAV TERMINAL BOX SCHEDULE

MFR: TITUS MODEL DESV

CODE	CFM SETTING MAX.	MIN.	DUCT CONNECTION INLET (INCHES)	OUTLET(6) (INCHES) W x H	REHEAT COIL DATA E.A.T. °F	E.W.T. °F	GPM	ROWS	TOTAL (2) MBH	WPD (FT.)	APD (IN. W.G.)	APD (4) (IN. W.G.)	SERVING AC	SA RESET SIGNAL	PLENUM (3) W x H x L	OPER. WT #	REMARKS
VAV-1																	DELETED
VAV-2	900	520	12	16X15	60.0	180.0	1.6	2	30.8	0.6	0.16	0.17	2	NO	NONE	50	(9)
VAV-3	520	175	8	12X10	60.0	180.0	0.7	2	11.8	0.2	0.21	0.22	2	YES	12X10X5'-0"	33	
VAV-4	300	130	6	12X8	60.0	180.0	0.7	2	9.1	0.1	0.13	0.21	2	YES	12X12X5'-0"	30	
VAV-5	1150	350	12	16X15	60.0	180.0	1.0	2	22.3	0.3	0.25	0.26	2	YES	16X16X5'-0"	50	
VAV-6	300	80	6	12X8	60.0	180.0	0.5	1	4.7	0.2	0.07	0.14	2	YES	12X10X5'-0"	30	
VAV-7	660	200	9	14X13	60.0	180.0	0.7	1	9.4	0.1	0.09	0.11	2	NO	14X14X5'-0"	41	(7)(8)0
VAV-8	2840	1400	24X16	38X18	60.0	180.0	3.0	2	77.7	0.6	0.21	0.22	2	NO	SEE SILENCER SCHEDULE	110	(7)(8)
VAV-9	870	300	10	14X13	60.0	180.0	1.0	2	18.5	0.2	0.27	0.28	2	YES	SEE SILENCER SCHEDULE	41	
VAV-10	780	250	10	14X13	60.0	180.0	0.7	1	10.5	0.1	0.12	0.13	2	NO	SEE SILENCER SCHEDULE	41	
VAV-11	945	350	12	16X15	60.0	180.0	1.0	2	22.3	0.3	0.18	0.19	2	YES	SEE SILENCER SCHEDULE	50	

NOTES:
(1) SEE SPECIFICATIONS FOR ADDITIONAL REQUIREMENTS INCLUDING ANDOVER DDC CONTROLS WHICH ARE TO BE FACTORY INSTALLED BY TERMINAL BOX MANUFACTURER.
(2) HEATING CAPACITIES ARE GIVEN AT MINIMUM CFM AIR FLOW QUANTITIES LISTED.
(3) PROVIDE SHOP FABRICATED PLENUMS WITH 1" THK. AL AND MINIMUM ID DIMENSIONS AND LENGTHS LISTED. SEE PLANS FOR MANDATORY ELBOWS (HEEL SIDE COUNTS FOR MINIMUM LENGTH – DO NOT USE TURNING VANES).
(4) PRESSURE DROPS FOR TERMINAL BOX AND REHEAT COIL ASSEMBLY SHALL NOT EXCEED 0.4" TOTAL.
(5) SEE PLANS FOR LEFT OR RIGHT HAND CONTROLS (TO BE VERIFIED BY CONTRACTOR PRIOR TO ORDERING).
(6) OUTLET DUCT CONNECTION SIZE LISTED IS SHEET METAL DUCT OUTSIDE DIMENSIONS.
(7) ASSOCIATED ROOM TEMPERATURE SENSOR TO BE "FLIDS" OR EQUAL FLUSH MOUNTED BLANK PLATE TYPE. ALL OTHERS SHALL BE CAMPUS STANDARD WITH TEMPERATURE READOUT, OFF-HOUR OVERRIDE BUTTON AND TEMPERATURE ADJUSTMENT CONTROLS.
(8) REHEAT CONTROL VALVES TO BE 2-WAY UON IN REMARKS COLUMN.
(9) PROVIDE HEAVY-DUTY PROTECTIVE COVER FOR ASSOCIATED TEMPERATURE SENSOR.

AIR OUTLET SCHEDULE

TAG	MANUFACTURER & MODEL #	DESCRIPTION	FRAME TYPE	REMARKS
A	TITUS 272RS	AERODYNAMIC/DOUBLE DEFLECTION BLADES AT 3/4" SPACING WITH VERTICAL FRONT BARS	BORDER TYPE 1	(1)
B	TITUS 25R	SINGLE DEFLECTION FIXED HORIZONTAL AERODYNAMIC BLADE WITH 45° DEFLECTION AND 1/2" SPACING	BORDER TYPE 1	
C	TITUS 300RS	DOUBLE DEFLECTION BLADES AT 3/4" SPACING WITH VERTICAL FRONT BLADES	BORDER TYPE 1	
D	TITUS 300RL	SINGLE DEFLECTION FIXED HORIZONTAL BLADE WITH 3/4" SPACING	BORDER TYPE 1	
E	TITUS TMR	ROUND LOUVER FACE CEILING SUPPLY DIFFUSER, ADJUSTABLE FOR TWO FLOW RATES	DUCT MOUNTED	(2)
F	TITUS PSS / PSS-NT	PERFORATED PLATE CEILING SUPPLY DIFFUSER WITH FIELD ADJUSTABLE "STAR" PATTERN DEFLECTORS	NOMINAL 24" X 24" LAY-IN	
G	TITUS PAR / PAR-NT	PERFORATED PLATE CEILING RETURN.	NOMINAL 24" X 12" LAY-IN	
H	TITUS 300RL + SG-BG-FM	BACK-TO-BACK (D) GRILLES WITH SECURITY BARS IN BETWEEN.	BORDER TYPE 1	
I	TITUS TDC	SQUARE LOUVER FACE CEILING SUPPLY DIFFUSER WITH OBD	BORDER TYPE 1	

NOTES:
(1) PROVIDE WITH REMOTE MOUNTED MODEL AG-125 DOUBLE BLADE DAMPER WHERE NOTED ON PLANS (NOTE – DO NOT USE IN CONJUNCTION WITH STANDARD OBD).
(2) PROVIDE WITH MODEL AC-75 ROUND OBD TO BE REMOTELY MOUNTED IN DUCT (ACCESS TO DAMPER SHALL BE PROVIDED THROUGH REMOVEABLE GRILLE).
(3) AIR OUTLETS WITH STANDARD OPPOSED BLADE DAMPERS (MODEL AG-35/95) ARE DENOTED ON PLANS WITH AN ASTERISK (I.E.; (A*)).
(4) SEE PLANS FOR NECK SIZE.
(5) ALL AIR OUTLETS SHALL HAVE STEEL CONSTRUCTION WITH MANUFACTURER'S STANDARD OFF-WHITE FINISH.
(6) COORDINATE FRAME TYPES WITH ACTUAL CEILING BEING PROVIDED (SEE ARCHITECTURAL DRAWINGS AND VERIFY WITH GENERAL CONTRACTOR BEFORE SUBMITTING). PROVIDE BORDER TYPE ONE FOR SURFACE MOUNTING IN GYP. BOARD CEILINGS AND NOMINAL 24" X 24" OR 24" X 12" FACE PLATES FOR LAY-IN OR CONCEALED SPLINE CEILINGS. SPECIAL FRAMES SHALL BE PROVIDED TO FIT NARROW TEE OF CONCEALED SPLINE CEILINGS AND DROP FACES WHERE TILE IN T-BAR CEILINGS HAVE TEGULAR EDGES.
(7) PROVIDE EARTHQUAKE TABS (MIN. 2) FOR EACH T-BAR OR CONCEALED SPLINE CEILING MOUNTED AIR OUTLET (SEE DETAIL 3/M4.2).
(8) ALL CEILING AIR OUTLETS INDICATED WITH ROUND NECKS SHALL BE CHANGED TO AIR OUTLETS WITH EQUIVALENT SQUARE NECKS (I.E., 12"ø NECKS BECOME 12" X 12") AND ACOUSTICALLY LINED SHEET METAL PLENUMS WITH SIDE DUCT CONNECTIONS (SEE DETAIL 3/M4.2) SHALL BE PROVIDED WHERE OBSTRUCTIONS EXIST THAT WOULD CAUSE CENTER ROUND NECK FLEX CONNECTIONS TO BECOME KINKED OR HAVE CENTERLINE BENDS LESS THAN 1-1/2 DUCT DIAMETERS. ALL AIR OUTLETS SHOWN WITH SIDE CONNECTIONS OR CALLED OUT AS HAVING SQUARE NECKS SHALL HAVE SHEET METAL PLENUMS AS CALLED OUT IN DETAIL 3/M4.2.

MECHANICAL DESIGN STUDIO inc
1777 Oakland Blvd. Suite 210
Walnut Creek, California 94596
tel 925. 210-0100
fax 925. 210-0144
www.mds-sf.com
PROJECT # 23087.00

REGISTERED PROFESSIONAL ENGINEER DOREL ANDREI No. M 26561 EXP. 9/30/05 MECHANICAL STATE OF CALIFORNIA

DIABLO VALLEY COLLEGE

DIABLO VALLEY COLLEGE NEW BOOKSTORE

321 GOLF CLUB RD.
PLEASANT HILL, CALIFORNIA

DATE: 23 JULY, 2004

0 REVISIONS- 23 JULY, 2004

BID SET

SHEET TITLE:
SCHEDULES

IDENTIFICATION STAMP
DIVISION OF THE STATE ARCHITECT
105925
APPL 01
AC LE FLS EO SS A1
DATE: 5-12-04 JUL 26 2004

BLDG. ID: 098
ID CODE: 312098-109.01-A

DRAWN BY: JLW/LK
CHECKED BY: DA
JOB NO: 0307

SHEET
M0.4

07/19/04 10:29:02 AM F:\C_23000\23087.00 DVC NEW BOOKSTORE\DRAWINGS\23087M04.DWG jeff

SHEET NOTES

1. 24X12 "LOW" COMBUSTION AIR DUCT DOWN FROM ABOVE, TERMINATE 12" ABOVE FINISH FLOOR.
2. BACK-TO-BACK TA GRILLES.
3. DOOR LOUVER (SAD – 2.0□ MIN. NFA)
4. 36x12 EA LOUVER DIRECTLY ABOVE DOOR.
5. OFFSET DUCT TIGHT TO UNDERSIDE OF CONC. BEAM (SSD).
6. MOUNT PIPING TO WALL ON COMMON STRUT CHANNEL PROVIDED BY MECH. CONTR. – VERIFY ADEQUATE LENGTH OF CHANNEL SUPPORTS WITH ALL OTHER TRADES.
7. MIN. BOILER SERVICE CLEARANCES – KEEP CLEAR.
8. COORDINATE DUCT AND PIPE PENETRATIONS OF FULL HEIGHT SECURITY CAGE WITH G.C.
9. INSTALL PROP. TYPE EXHAUST FAN AS HIGH AS POSSIBLE.
10. INSTALL VAV-2 TEMP SENSOR INSIDE HEAVY-DUTY PROTECTIVE CAGE.
11. CONCRETE PAD MOUNTED BOILER (SEE DETAIL 6/M4.2).
12. CONCRETE PAD MOUNTED EXPANSION TANK (SEE DETAIL 8/M4.2).
13. PIPE SUPPORTED IN-LINE PUMP (SEE DETAIL 9/M4.2).
14. (0) INSTALL PROPELLOR TYPE EXHAUST FNA AS HIGH AS POSSIBLE UNDER GYP. BOARD CEILING.

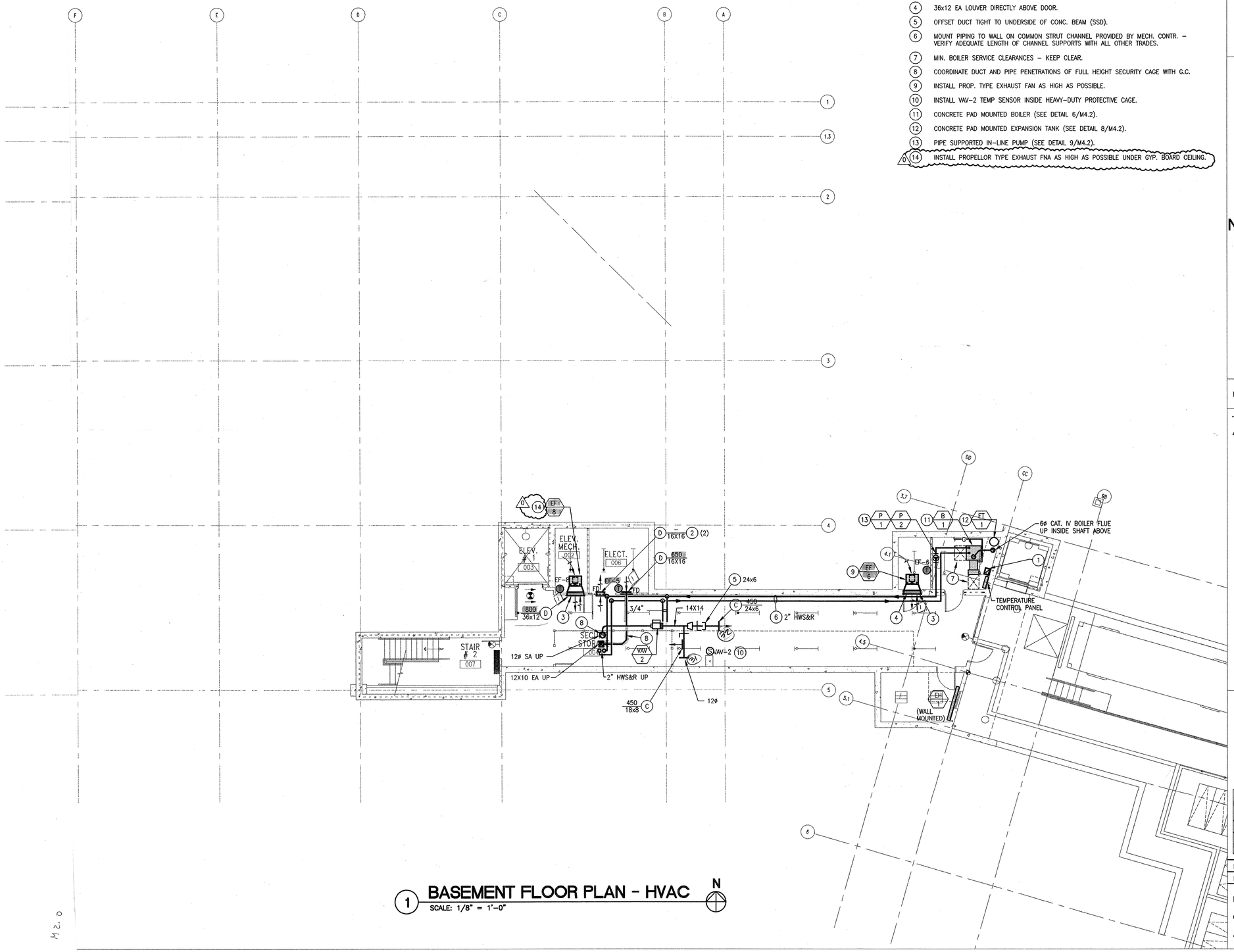

1 BASEMENT FLOOR PLAN - HVAC

SCALE: 1/8" = 1'-0"

N

MECHANICAL DESIGN STUDIO inc
1777 Oakland Blvd. Suite 210
Walnut Creek, California 94596
tel 925. 210-0100
fax 925. 210-0144
www.mds-sf.com
PROJECT # 23087.00

REGISTERED PROFESSIONAL ENGINEER DAREL ANGEL No. M 26561 EXP. 9/30/06 MECHANICAL STATE OF CALIFORNIA

DIABLO VALLEY COLLEGE

DIABLO VALLEY COLLEGE NEW BOOKSTORE

321 GOLF CLUB RD.
PLEASANT HILL, CALIFORNIA

DATE: 23 JULY, 2004

0 REVISIONS- 23 JULY, 2004

BID SET

SHEET TITLE:

BASEMENT FLOOR PLAN HVAC

IDENTIFICATION STAMP
DIVISION OF THE STATE ARCHITECT
105925
APPL 01
AC LE FLS ED SS M1
DATE: 5-12-04 JUL 26 2004

BLDG. ID: 098
ID CODE: 312098-109.01-A

DRAWN BY: JLW/LK
CHECKED BY: DA
JOB NO: 0307

SHEET M2.0

07/19/04 10:29:08 AM F:\C_23000\23087.00 DVC NEW BOOKSTORE\DRAWINGS\23087M20.DWG jeff

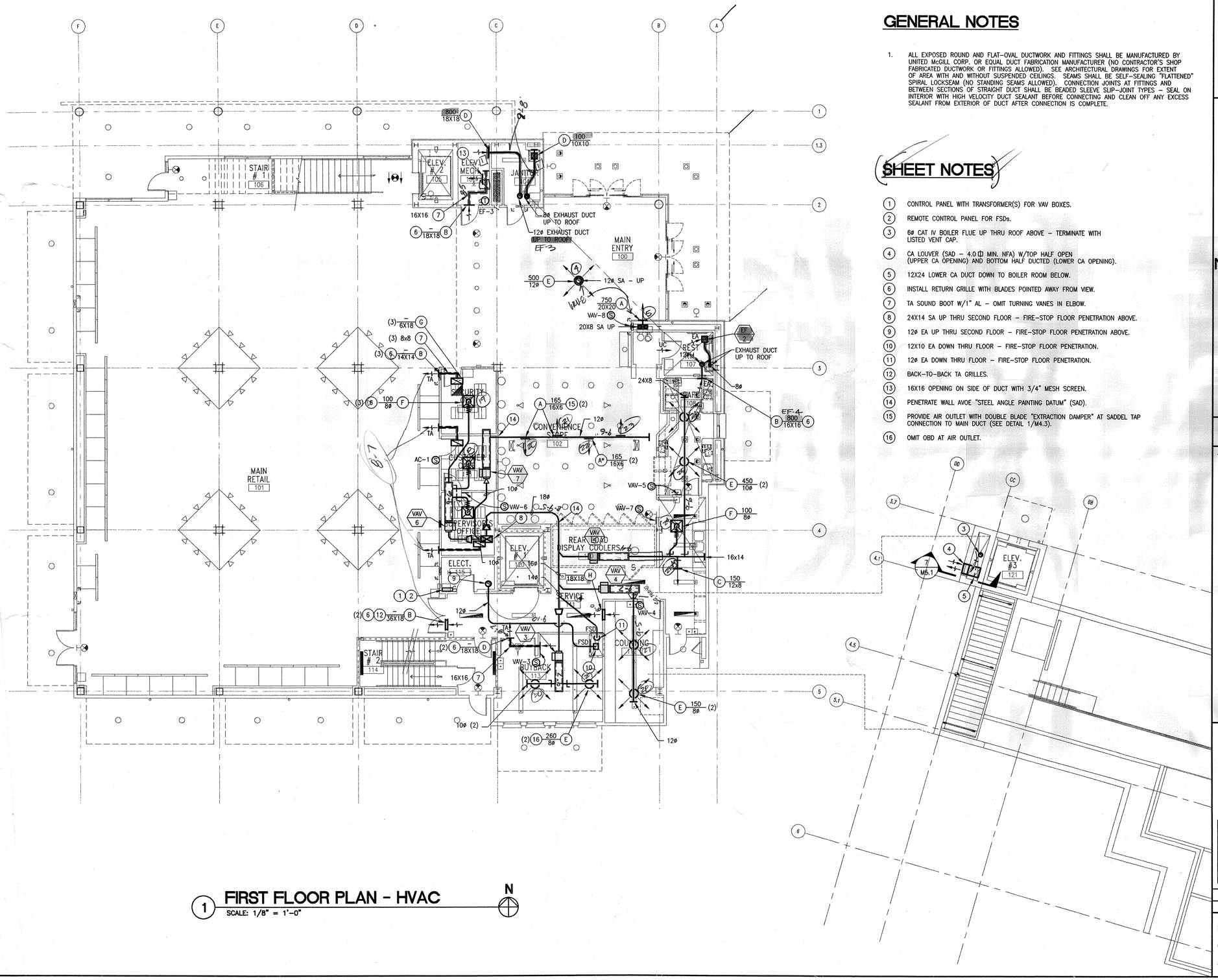

1 FIRST FLOOR PLAN - HVAC
SCALE: 1/8" = 1'-0"

GENERAL NOTES

1. ALL EXPOSED ROUND AND FLAT-OVAL DUCTWORK AND FITTINGS SHALL BE MANUFACTURED BY UNITED McGILL CORP. OR EQUAL DUCT FABRICATION MANUFACTURER (NO CONTRACTOR'S SHOP FABRICATED DUCTWORK OR FITTINGS ALLOWED). SEE ARCHITECTURAL DRAWINGS FOR EXTENT OF AREA WITH AND WITHOUT SUSPENDED CEILINGS. SEAMS SHALL BE SELF-SEALING "FLATTENED" SPIRAL LOCKSEAM (NO STANDING SEAMS ALLOWED). CONNECTION JOINTS AT FITTINGS AND BETWEEN SECTIONS OF STRAIGHT DUCT SHALL BE BEADED SLEEVE SLIP-JOINT TYPES - SEAL ON INTERIOR WITH HIGH VELOCITY DUCT SEALANT BEFORE CONNECTING AND CLEAN OFF ANY EXCESS SEALANT FROM EXTERIOR OF DUCT AFTER CONNECTION IS COMPLETE.

SHEET NOTES

1. CONTROL PANEL WITH TRANSFORMER(S) FOR VAV BOXES.
2. REMOTE CONTROL PANEL FOR FSDs.
3. 6ø CAT IV BOILER FLUE UP THRU ROOF ABOVE - TERMINATE WITH LISTED VENT CAP.
4. CA LOUVER (SAD - 4.0 ⊡ MIN. NFA) W/TOP HALF OPEN (UPPER CA OPENING) AND BOTTOM HALF DUCTED (LOWER CA OPENING).
5. 12X24 LOWER CA DUCT DOWN TO BOILER ROOM BELOW.
6. INSTALL RETURN GRILLE WITH BLADES POINTED AWAY FROM VIEW.
7. TA SOUND BOOT W/1" AL - OMIT TURNING VANES IN ELBOW.
8. 24X14 SA UP THRU SECOND FLOOR - FIRE-STOP FLOOR PENETRATION ABOVE.
9. 12ø EA UP THRU SECOND FLOOR - FIRE-STOP FLOOR PENETRATION ABOVE.
10. 12X10 EA DOWN THRU FLOOR - FIRE-STOP FLOOR PENETRATION.
11. 12ø EA DOWN THRU FLOOR - FIRE-STOP FLOOR PENETRATION.
12. BACK-TO-BACK TA GRILLES.
13. 16X16 OPENING ON SIDE OF DUCT WITH 3/4" MESH SCREEN.
14. PENETRATE WALL AVOE "STEEL ANGLE PAINTING DATUM" (SAD).
15. PROVIDE AIR OUTLET WITH DOUBLE BLADE "EXTRACTION DAMPER" AT SADDEL TAP CONNECTION TO MAIN DUCT (SEE DETAIL 1/M4.3).
16. OMIT OBD AT AIR OUTLET.

MECHANICAL DESIGN STUDIO inc
1777 Oakland Blvd. Suite 210
Walnut Creek, California 94596
tel 925. 210-0100
fax 925. 210-0144
www.mds-sf.com
PROJECT # 23087.00

REGISTERED PROFESSIONAL ENGINEER
DOREL ANGHEL
No. M 26561
EXP. 9/30/06
MECHANICAL
STATE OF CALIFORNIA

DIABLO VALLEY COLLEGE

DIABLO VALLEY COLLEGE NEW BOOKSTORE

321 GOLF CLUB RD.
PLEASANT HILL, CALIFORNIA

DATE: 23 JULY, 2004

BID SET

SHEET TITLE:

FIRST FLOOR PLAN HVAC

IDENTIFICATION STAMP
DIVISION OF THE STATE ARCHITECT
105925
APPL 01
AC LE FLS ED SS A1
DATE: 5-12-04 JUL 26 2004

BLDG. ID: 098
ID CODE: 312098-109.01-A

DRAWN BY: JLW/LK
CHECKED BY: DA
JOB NO: 0307

SHEET M2.1

07/19/04 10:29:13 AM F:\C_23000\23087.00 DVC NEW BOOKSTORE\DRAWINGS\23087M21.DWG jeff

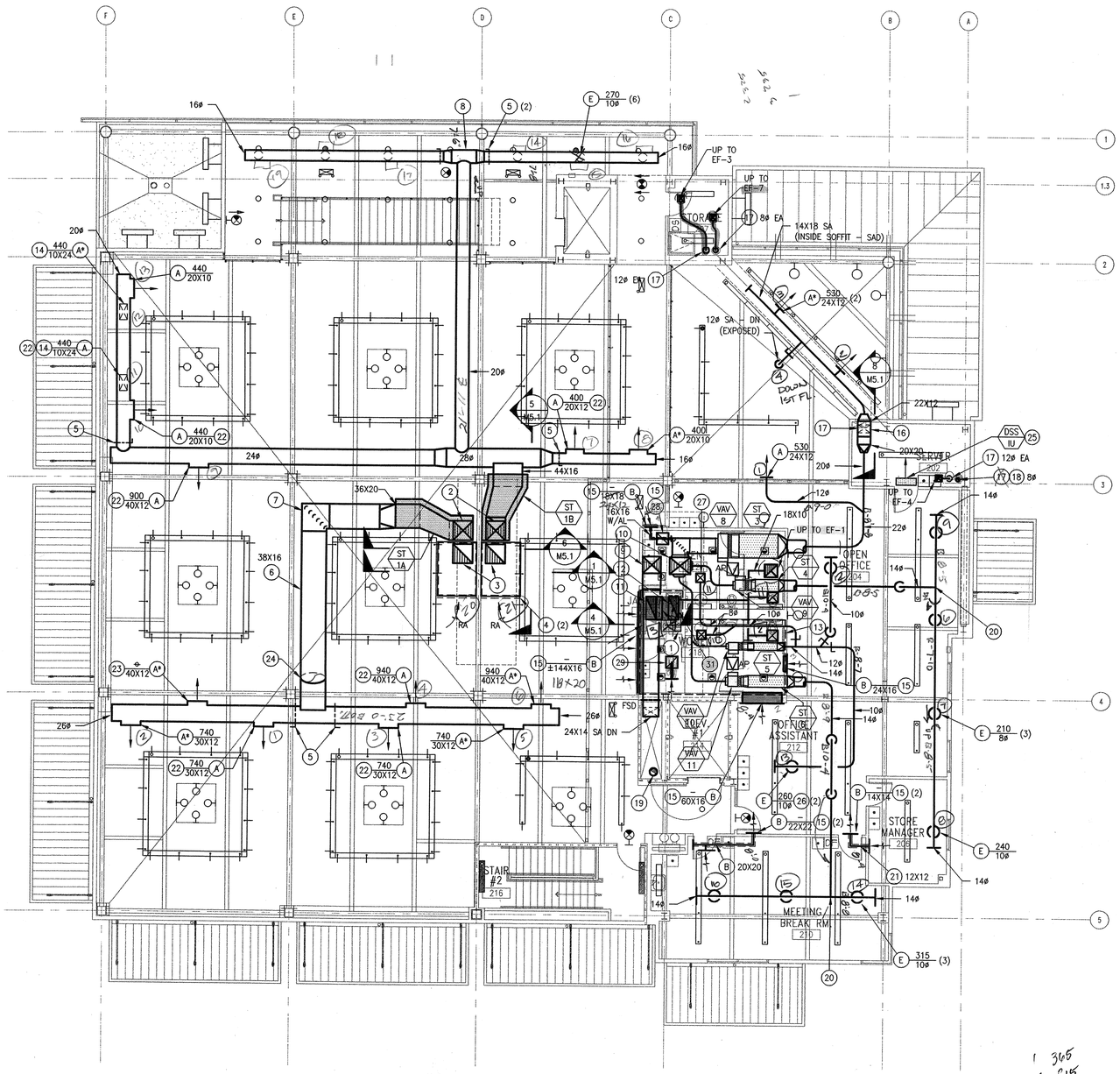

1 SECOND FLOOR PLAN - HVAC

SCALE: 1/8" = 1'-0"

N

GENERAL NOTES

1. ALL EXPOSED ROUND AND FLAT-OVAL DUCTWORK AND FITTINGS SHALL BE MANUFACTURED BY UNITED McGILL CORP. OR EQUAL DUCT FABRICATION MANUFACTURER (NO CONTRACTOR'S SHOP FABRICATED DUCTWORK OR FITTINGS ALLOWED). SEE ARCHITECTURAL DRAWINGS FOR EXTENT OF AREA WITH AND WITHOUT SUSPENDED CEILINGS. SEAMS SHALL BE SELF-SEALING "FLATTENED" SPIRAL LOCKSEAM (NO STANDING SEAMS ALLOWED). CONNECTION JOINTS AT FITTINGS AND BETWEEN SECTIONS OF STRAIGHT DUCT SHALL BE BEADED SLEEVE SLIP-JOINT TYPES - SEAL ON INTERIOR WITH HIGH VELOCITY DUCT SEALANT BEFORE CONNECTING AND CLEAN OFF ANY EXCESS SEALANT FROM EXTERIOR OF DUCT AFTER CONNECTION IS COMPLETE.

SHEET NOTES

1. CONTROL PANEL WITH TRANSFORMER(S) FOR VAV BOXES (LOCATED INSIDE JANITOR'S CLOSED).
2. 30X26 OD SA DUCT SILENCERS UP TO AC-1 ON ROOF ABOVE - CONNECT TO AC-1 WITH FC.
3. 28X28 RA DUCTS UP TO RA PLENUM BENEATH AC-1 ON ROOF ABOVE - SEAL ROOF PENETRATION AIR TIGHT WITH ACOUSTICAL CAULK.
4. 53X22 OD FLAT-OVAL RA DUCTS W/1" AL AND 3/4" MESH SCREEN IN 1" RECESSED FLANGE AT AT DUCT OPENING.
5. RUSKIN MODEL CDR25 HEAVY DUTY ROUND CONTROL DAMPER WITH LOCKING HAND QUADRANT.
6. FLAT-OVAL SA DUCT - INSTALL LEVEL (DO NOT SLOPE WITH ROOF ABOVE).
7. MITERED FLAT-OVAL 90° ELBOW WITH TURNING VANES.
8. REDUCING BULLHEAD TEE WITH TURNING VANES.
9. 28X26 OD SA DUCT SILENCER (ST-2A) UP TO AC-2 ON ROOF ABOVE - CONNECT TO AC-2 WITH FC (SEE SECTION 2/M5.1).
10. 32X26 OD SA DUCT SILENCER (ST-2B) UP TO AC-2 ON ROOF ABOVE - CONNECT TO AC-2 WITH FC (SEE SECTION 3/M5.1).
11. 14X34 RA DUCT UP TO RA PLENUM BENEATH AC-2 ON ROOF ABOVE - SEAL ROOF PENETRATION AIR TIGHT WITH ACOUSTICAL CAULK AND PROVIDE 45° ELBOW FACING AWAY FOR ADJACENT RETURN AIR GRILLE.
12. 18X38 OPENING IN ROOF ABOVE FOR RA TO AC-2 PLENUM BENEATH AC-2.
13. UN-DUCTED RA PLENUM ABOVE JANITOR 224 AND MEN 218 - PROVIDE ACOUSTICAL LINING PER SECTION 4/M5.1).
14. MOUNT SA REGISTER ON BOTTOM OF DUCT FACING DOWN.
15. INSTALL RETURN GRILLE WITH BLADES POINTED AWAY FROM VIEW.
16. MARRIAGE FITTING WITH 20X12 TOP (HORZ) LEG AND 20X8 (VERT) BOTTOM LEG AND ADJUSTABLE SPLITTER DAMPER BETWEEN BRANCHES.
17. 20X8 EXPOSED SA DUCT DOWN THRU FLOOR - FIRE-STOP FLOOR PENETRATION.
18. EXHAUST DUCT UP THRU ROOF.
19. 12ø EXHAUST DUCT UP FROM BELOW WITH TRANSITION TO 12X10 JOIST BELOW ROOF PENETRATION.
20. BULLHEAD TEE W/O TURNING VANES.
21. TA SOUND BOOT W/1" AL - OMIT TURNING VANES IN ELBOW.
22. PROVIDE AIR OUTLET WITH DOUBLE-BLADE "EXTRACTOR DAMPER" AT SADDLE TAP CONNECTION TO MAIN SUPPLY DUCT (SEE DTL. 1/M4.3).
23. "BLANK-OFF" AIR OUTLET WITH SHT MTL INSIDE SADDLE TAP FITTING (AIR OUTLET TO BE USED IF MEZZANINE IS ADDED IN FUTURE).
24. RADIUSED OFFSET UNDER BEAM (SSD).
25. MOUNTED SPLIT-SYSTEM FAN COIL UNIT ABOVE DOOR (SEE DTL. 1/M4.2).
26. OMIT OBD AT AIR OUTLET.
27. CEILING SUPPLY DIFFUSER (1) WITH 9X9 NECK, TYP-2 - BALANCE EACH TO 130 CFM.
28. CEILING TRANSFER GRILLE (D) WITH 16X16 NECK.
29. CEILING TRANSFER GRILLE (D) WITH 16X16 NECK AND ACOUSTICALLY LINED ELBOW (OPEN TO RA PLENUM ABOVE RESTROOM CEILING).
30. CEILING EXHAUST REGISTER (D*) WITH 16X16 NECK AND 12X8 CONNECTING BRANCH DUCT, TYP-2 - BALANCE EACH TO 500 CFM.
31. CEILING EXHAUST REGISTER (D*) IN JANITOR'S CLOSET WITH 8X8 NECK AND 6ø CONNECTING BRANCH DUCT - BALANCE EACH TO 100 CFM.

MECHANICAL DESIGN STUDIO inc
1777 Oakland Blvd. Suite 210
Walnut Creek, California 94596
tel 925. 210-0100
fax 925. 210-0144
www.mds-sf.com
PROJECT # 23087.00

REGISTERED PROFESSIONAL ENGINEER DOREL ANDREI DANCA No. M 26561 Exp. 12/30/06 MECHANICAL STATE OF CALIFORNIA

DIABLO VALLEY COLLEGE

DIABLO VALLEY COLLEGE NEW BOOKSTORE

321 GOLF CLUB RD.
PLEASANT HILL, CALIFORNIA

DATE: 23 JULY, 2004

BID SET

SHEET TITLE:

SECOND FLOOR PLAN HVAC

IDENTIFICATION STAMP
DIVISION OF THE STATE ARCHITECT
105925
APPL 01
AC LE FLS ED SS AT
DATE: 5-12-04 JUL 26 2004

BLDG. ID: 098
ID CODE: 312098-109.01-A

DRAWN BY: JLW/LK
CHECKED BY: DA
JOB NO: 0307

SHEET M2.2

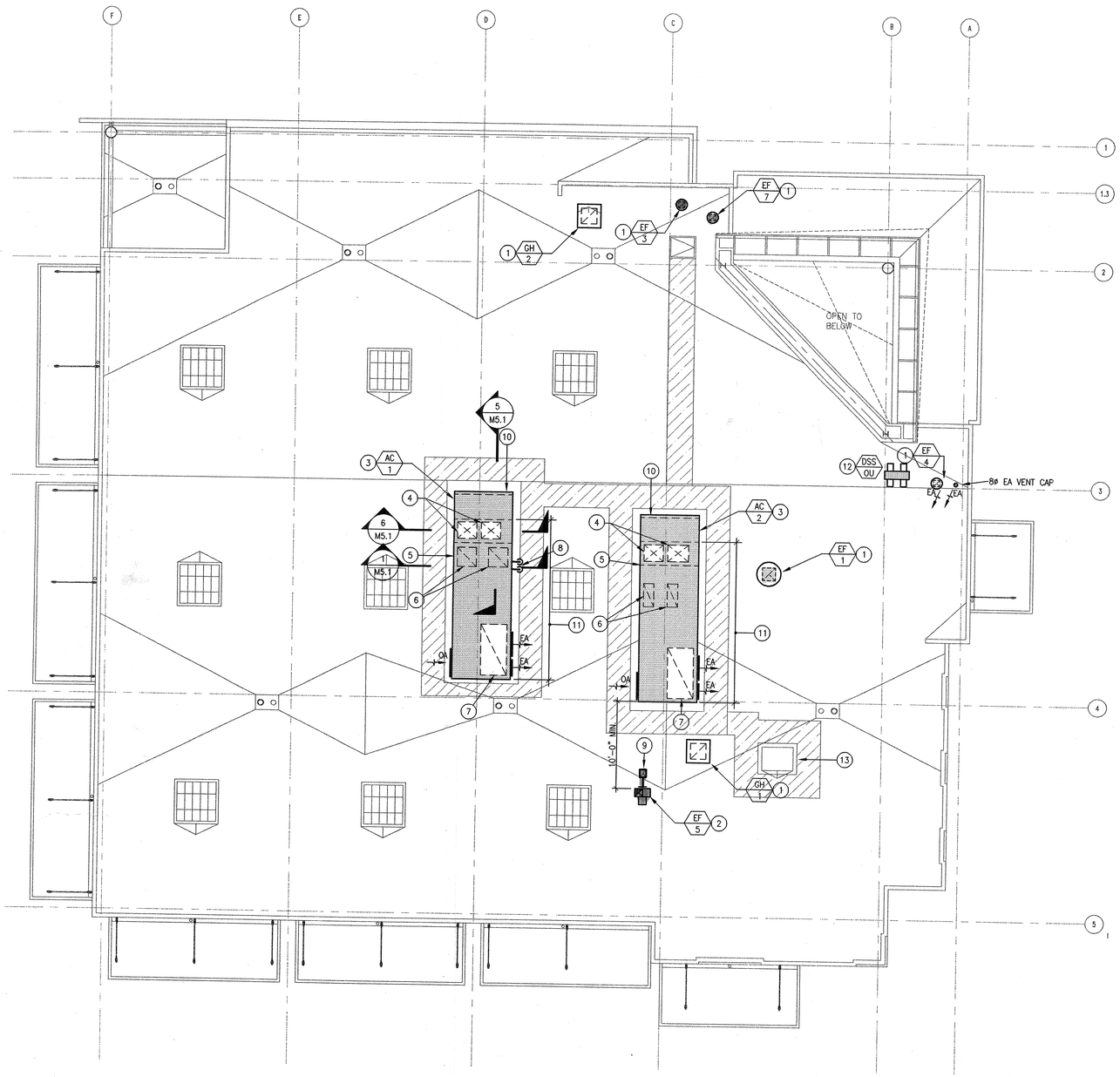

1 ROOF PLAN - HVAC
SCALE: 1/8" = 1'-0"

N

SHEET NOTES

1. CURB MOUNTED EXHAUST FAN (SEE DTL. 3/M4.1).
2. SLEEPER MOUNTED EXHAUST FAN/GRAVITY HOOD (SEE DTL. 4/M4.1).
3. AC-1&2 TO BE MOUNTED ON A PERIMETER CURB/ISOLATOR WITH SEPARATE PEDESTAL AND ISOLATOR SUPPORTS ON THE CONDENSER END. ENCLOSED PORTION OF PERIMETER CURB TO BE USED AS A RA PLENUM - LINE ALL AVAILABLE SURFACES WITH 4" AL. - NET HEIGHT OF RA PLENUM SHALL BE 24" (SECTIONS FOR AC-2 ARE SIMILAR TO THOSE SHOWN FOR AC-1 FOR ABOVE ROOF CONDITIONS ONLY).
4. SA DUCT SOUND ATTENUATOR DOWN THRU ROOF.
5. RA PLENUM DIVIDER WALL INSIDE CURB SPACE UNDER AC UNIT.
6. RA DUCT STUB-UPS FROM SECOND FLOOR BELOW INTO RA PLENUM BENEATH AC UNIT.
7. RA OPENING ON UNDERSIDE OF AC UNIT.
8. 1-1/4" HWS&R DOWN THRU ROOF (SEE DTL. 6&7/M4.1)
9. 12X10 EA DOWN THRU ROOF (SEE DTL. 5/M4.1)
10. SEE DTL 2/M4.1 FOR SUPPORT AT CONDENSER END OF AC UNIT.
11. EXTENT OF UNIT SUPPORTED BY PERIMETER CURB/ISOLATOR (SEE DTL. 1/M4.1)
12. SLEEPER MOUNTED CONDENSING UNIT (SEE DTL. 8/M4.1)
13. REMOTE CONDENSING UNIT FOR KITCHEN WALK-IN REFRIGERATOR (SAD).

MECHANICAL DESIGN STUDIO inc
1777 Oakland Blvd. Suite 210
Walnut Creek, California 94596
tel 925. 210-0100
fax 925. 210-0144
www.mds-sf.com
PROJECT # 23087.00

REGISTERED PROFESSIONAL ENGINEER
DOREL ANGHEL
No. M 26561
EXP. 9/30/06
MECHANICAL
STATE OF CALIFORNIA

DIABLO VALLEY COLLEGE

DIABLO VALLEY COLLEGE NEW BOOKSTORE

321 GOLF CLUB RD.
PLEASANT HILL, CALIFORNIA

DATE: 23 JULY, 2004

BID SET

SHEET TITLE:

ROOF PLAN HVAC

IDENTIFICATION STAMP
DIVISION OF THE STATE ARCHITECT
105925
APPL 01
AC VE FLS ED SS A1
DATE: 5-12-04 JUL 26 2004

BLDG. ID: 098
ID CODE: 312098-109.01-A

DRAWN BY: JLW/LK
CHECKED BY: DA
JOB NO: 0307

SHEET M2.3

GENERAL NOTES

1. UON, HWS&R BRANCH PIPES TO INDIVIDUAL VAV BOX REHEAT COILS SHALL BE 3/4".

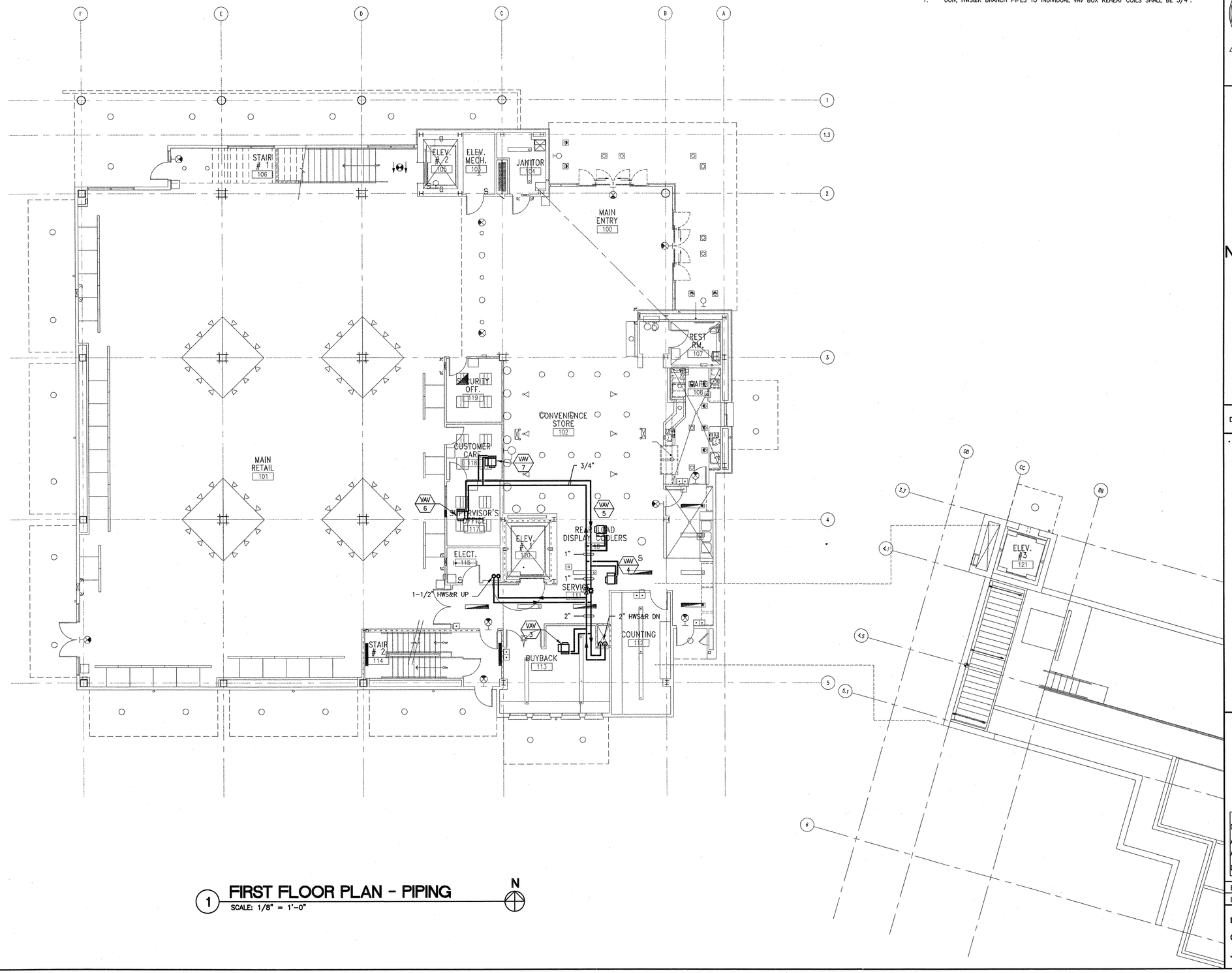

1 FIRST FLOOR PLAN - PIPING

SCALE: 1/8" = 1'-0"

N

MECHANICAL DESIGN STUDIO inc
1777 Oakland Blvd. Suite 210
Walnut Creek, California 94596
tel 925. 210-0100
fax 925. 210-0144
www.mds-sf.com
PROJECT # 23087.00

REGISTERED PROFESSIONAL ENGINEER DOREL ANGEL No. M 26561 EXP. 12/30/06 MECHANICAL STATE OF CALIFORNIA

DIABLO VALLEY COLLEGE

DIABLO VALLEY COLLEGE NEW BOOKSTORE

321 GOLF CLUB RD.
PLEASANT HILL, CALIFORNIA

DATE: 23 JULY, 2004

BID SET

SHEET TITLE:

FIRST FLOOR PLAN PIPING

IDENTIFICATION STAMP
DIVISION OF THE STATE ARCHITECT
105925
APPL 01
AC LE FLS ED SS AT
DATE: 5-12-04 JUL 26 2004

BLDG. ID: 098
ID CODE: 312098-109.01-A

DRAWN BY: JLW/LK
CHECKED BY: DA
JOB NO: 0307

SHEET
M3.1

07/19/04 10:29:32 AM F:\C_23000\23087.00 DVC NEW BOOKSTORE\DRAWINGS\23087M31.DWG jeff

GENERAL NOTES

1. UON, HWS&R BRANCH PIPES TO INDIVIDUAL VAV BOX REHEAT COILS SHALL BE 3/4".

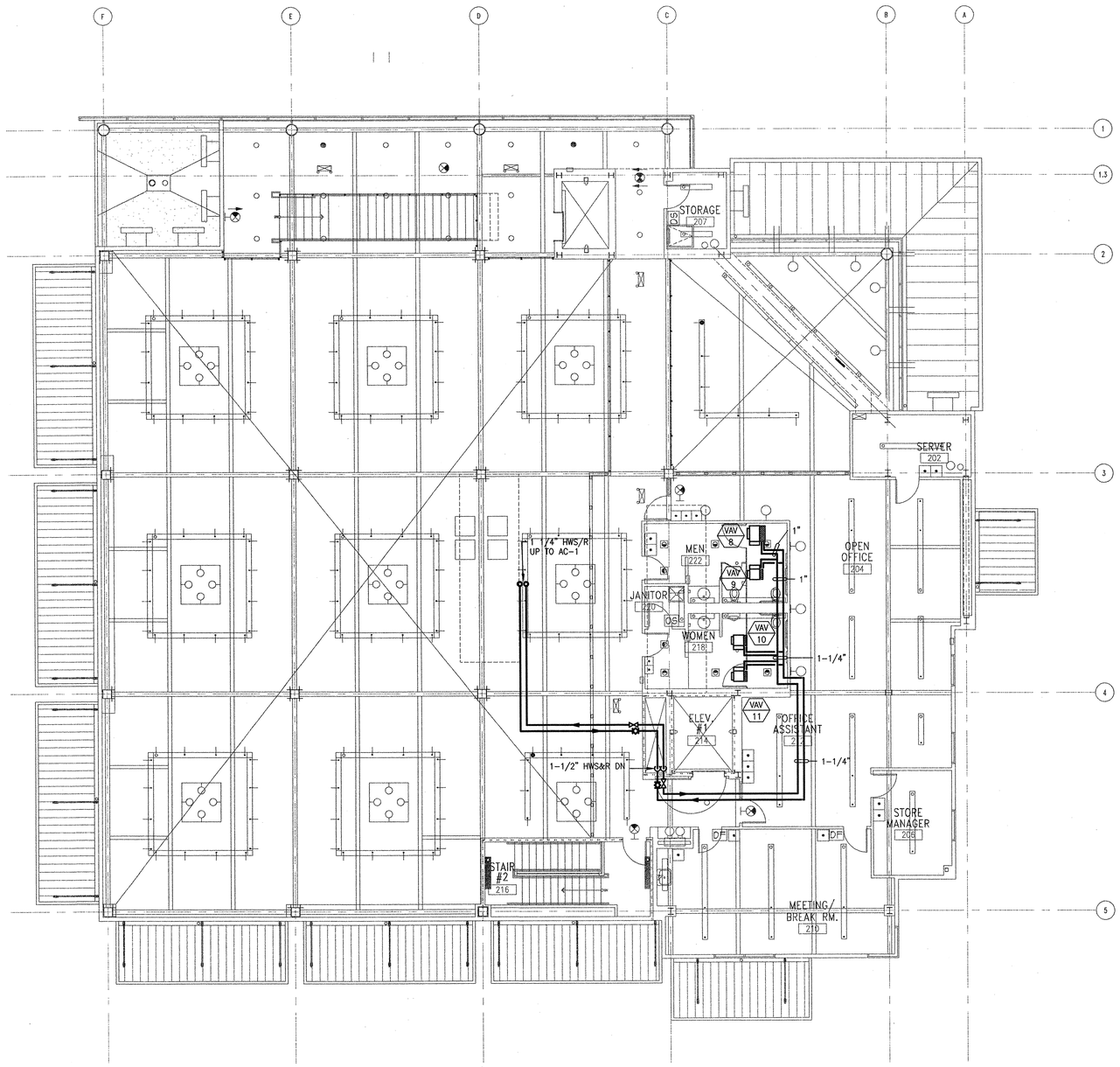

1 SECOND FLOOR PLAN - PIPING

SCALE: 1/8" = 1'-0"

N

MECHANICAL DESIGN STUDIO *inc*
1777 Oakland Blvd. Suite 210
Walnut Creek, California 94596
tel 925. 210-0100
fax 925. 210-0144
www.mds-sf.com
PROJECT # 23087.00

REGISTERED PROFESSIONAL ENGINEER
DOREL ANDREI
No. M 26561
EXP. 9/30/06
MECHANICAL
STATE OF CALIFORNIA

DIABLO VALLEY COLLEGE

DIABLO VALLEY COLLEGE NEW BOOKSTORE

321 GOLF CLUB RD.
PLEASANT HILL, CALIFORNIA

DATE: 23 JULY, 2004

BID SET

SHEET TITLE:

SECOND FLOOR PLAN PIPING

IDENTIFICATION STAMP
DIVISION OF THE STATE ARCHITECT
105925
APPL 01
AC LE FLS SO SS A1
CHL
DATE: 5-12-04 JUL 26 2004

BLDG. ID: 098
ID CODE: 312098-109.01-A

DRAWN BY: JLW/LK
CHECKED BY: DA
JOB NO: 0307

SHEET
M3.2

07/19/04 10:29:37 AM F:\C_23000\23087.00 DVC NEW BOOKSTORE\DRAWINGS\23087M32.DWG jeff

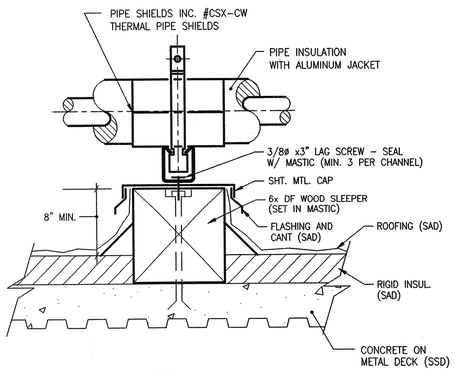

SECTION A-A

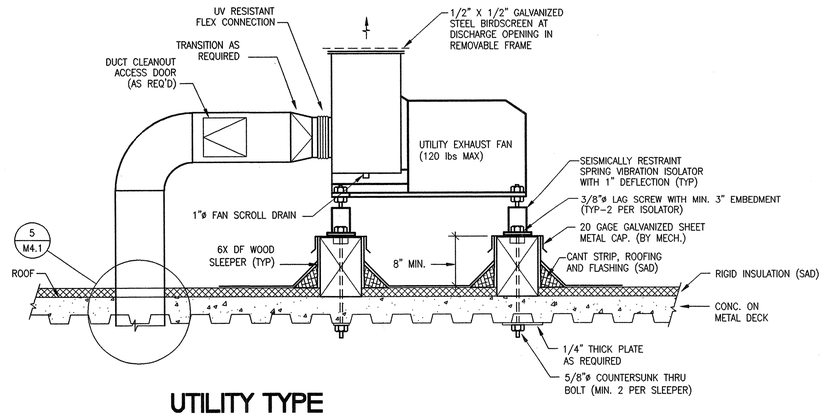

UTILITY TYPE EXHAUST FAN MOUNTING DETAIL

4 SCALE: NONE

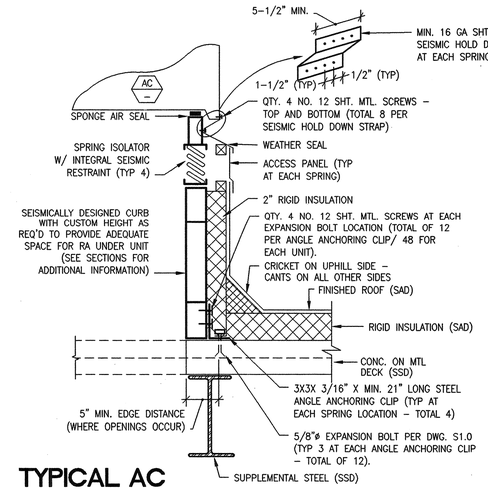

TYPICAL AC UNIT CURB/ ISOLATOR DETAIL

1 SCALE: NONE

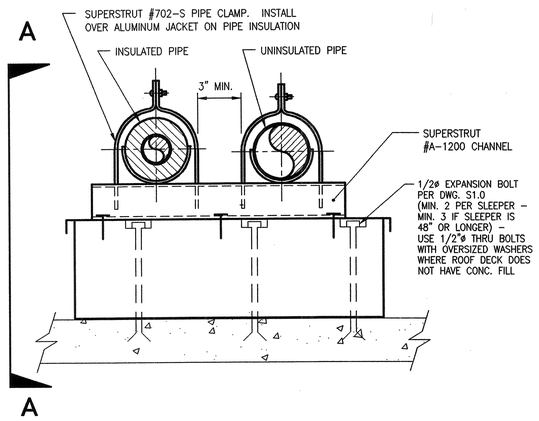

PIPE SUPPORT ON WALL AND DECK

7 SCALE: NONE

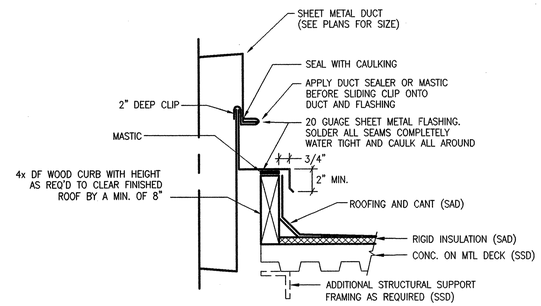

DUCT ROOF PENETRATION DETAIL

5 SCALE: NONE

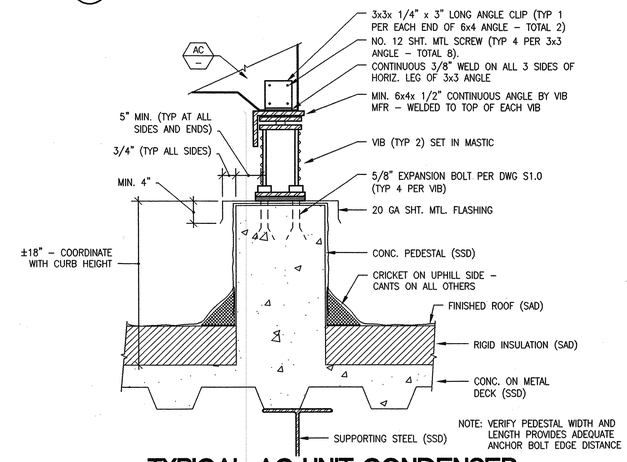

TYPICAL AC UNIT CONDENSER END MOUNTING DETAIL

2 SCALE: NONE

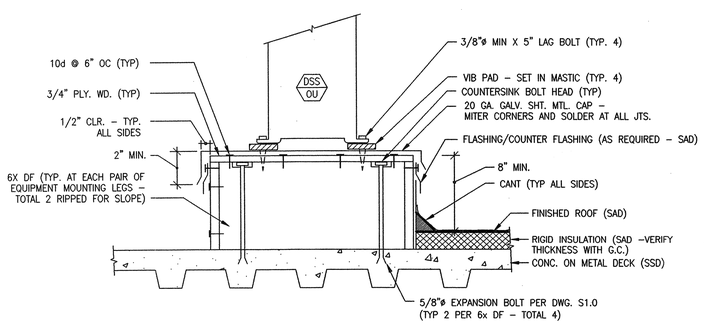

DSS-OU MOUNTING DETAIL

8 SCALE: NONE

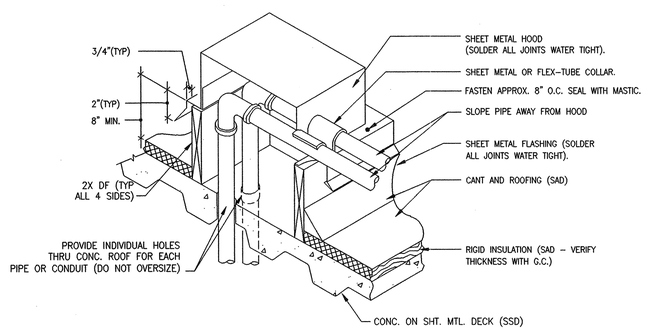

NOTES:
1. INCREASE HEIGHTS OF WOOD CURB AS REQUIRED TO ACCOMMODATE RIGID INSULATION – COORDINATE WITH GENERAL CONTRACTOR.
2. COORDINATE QUANTITY OF CONDUITS WITH ELECTRICAL CONTRACTOR (INCLUDE ANY ASSOCIATED POWER AND CONTROLS CONDUITS IN SAME HOOD).

MULTIPLE PIPE PENATRATION THRU ROOF

6 SCALE: NONE

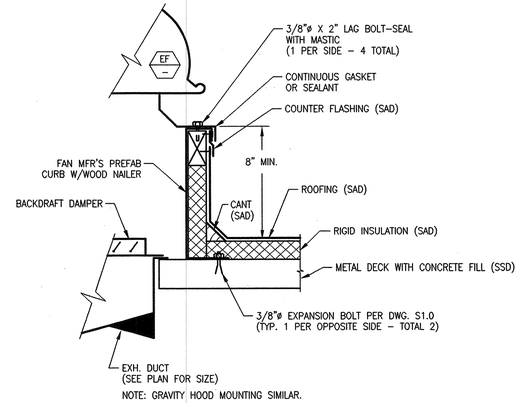

NOTE: GRAVITY HOOD MOUNTING SIMILAR.

TYPICAL CURB MOUNTED EXHAUST FAN DETAIL

3 SCALE: NONE

MECHANICAL DESIGN STUDIO inc
1777 Oakland Blvd. Suite 210
Walnut Creek, California 94596
tel 925. 210-0100
fax 925. 210-0144
www.mds-sf.com
PROJECT # 23087.00

REGISTERED PROFESSIONAL ENGINEER DOREL ANGHEL No. M 26561 EXP. 9/30/06 MECHANICAL STATE OF CALIFORNIA

DIABLO VALLEY COLLEGE

DIABLO VALLEY COLLEGE NEW BOOKSTORE

321 GOLF CLUB RD.
PLEASANT HILL, CALIFORNIA

DATE: 23 JULY, 2004

BID SET

SHEET TITLE:
DETAILS

IDENTIFICATION STAMP
DIVISION OF THE STATE ARCHITECT
105925
APPL 01
AC LE FLS EO SS 41
DATE: 5-12-04 JUL 26 2004

BLDG. ID: 098
ID CODE: 312098-109.01-A

DRAWN BY: JLW/LK
CHECKED BY: DA
JOB NO: 0307

SHEET
M4.1

07/19/04 10:29:41 AM F:\C_23000\23087.00 DVC NEW BOOKSTORE\DRAWINGS\23087M41.DWG jeff

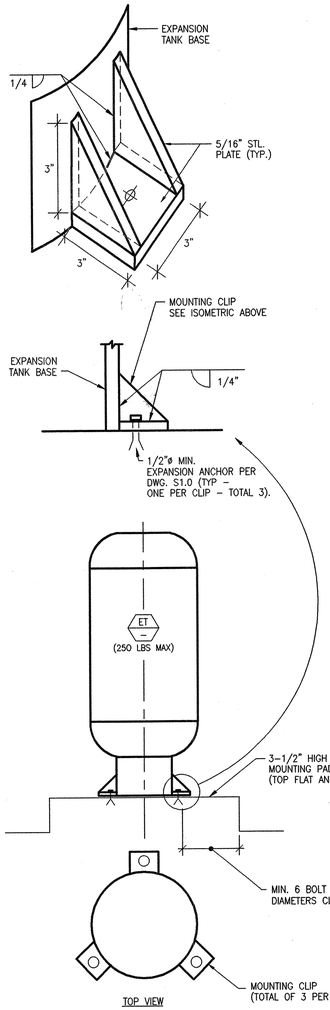

8 ET-1 MOUNTING DETAIL
SCALE: NONE

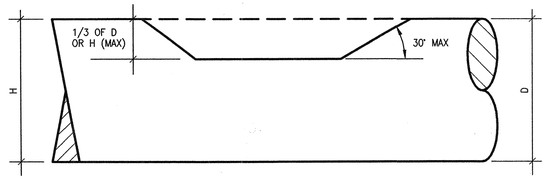

NOTES: 1. CONTINUOUSLY SOLDER ALL JOINTS

2. PROVIDE WHERE OFF-SETS CAN NOT BE PROVIDED DUE TO ADDITIONAL INTERFERENCES.

5 TYPICAL DUCT NOTCH DETAIL
SCALE: NONE

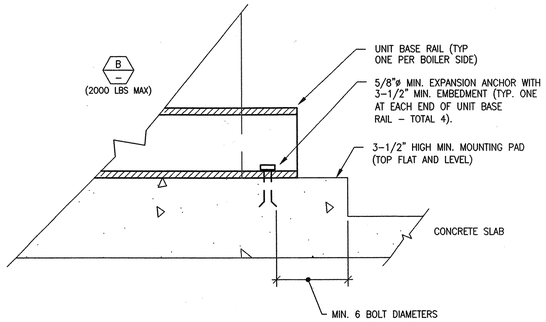

6 BOILER B-1 MOUNTING DETAIL
SCALE: NONE

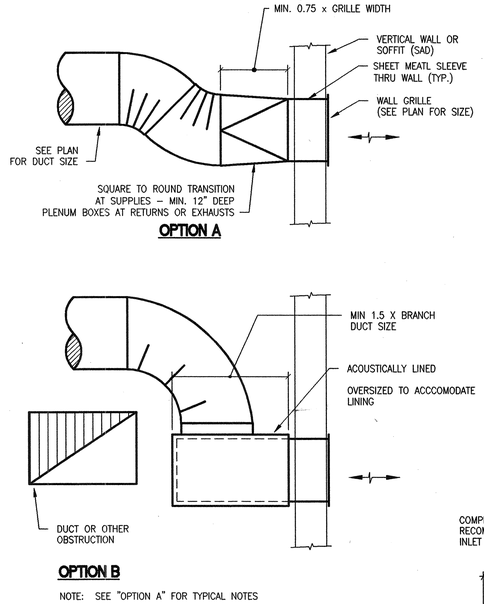

NOTE: SEE "OPTION A" FOR TYPICAL NOTES

4 WALL GRILLE CONNECTION DETAIL
SCALE: NONE

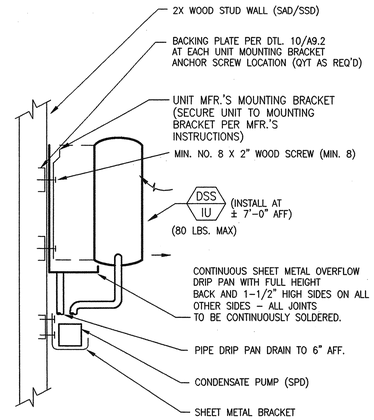

1 DSS-IU MOUNTING/INSTALLATION DETAIL
SCALE: NONE

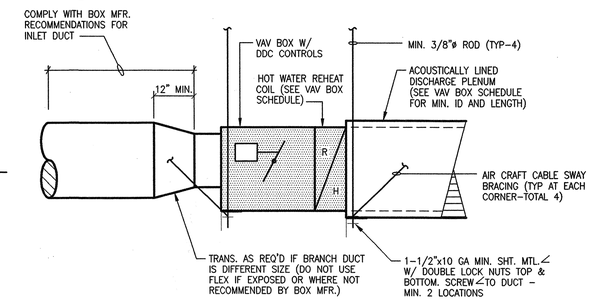

2 VAV BOX INSTALLATION DETAIL
SCALE: NONE

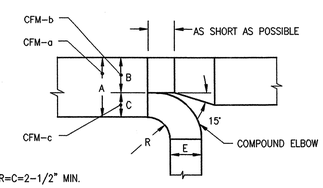

R=C=2-1/2" MIN.

$B = \frac{CFM\text{-}b}{CFM\text{-}a} \times A$

NOTE: EQUATIONS APPLY ONLY WHERE DIMENSIONS ARE NOT CALLED OUT ON PLAN

MARRIAGE BRANCH TAKE-OFF

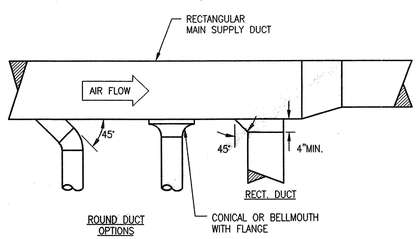

MEDIUM PRESSURE BRANCH DUCT CONNECTION

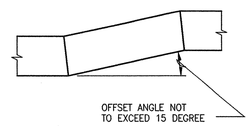

MEDIUM PRESSURE DUCT OFFSET

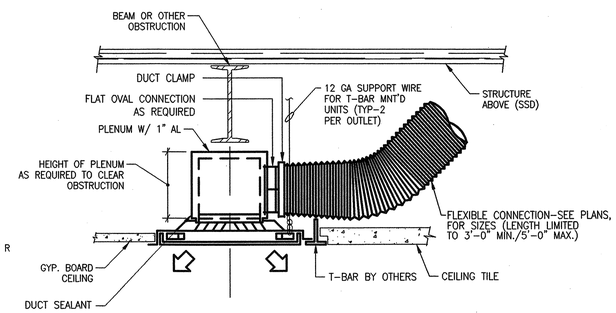

NOTES:

1. DETAIL SHALL APPLY TO SQUARE NECKED CEILING AIR OUTLETS AND OTHER CEILING OUTLETS THAT ARE LOCATED BELOW DUCTWORK, BEAMS OR OTHER OBSTACLES WHERE CLEARANCES WILL NOT ALLOW GRADUAL BENDING FLEX DUCT CONNECTIONS INTO TOP OF AIR OUTLETS.
2. THE SIZE OF THE SUPPLY AIR PLENUM SHALL BE A MINIMUM OF 1" LARGER IN HEIGHT AND WIDTH THAN THE FLAT OVAL DUCTWORK CONNECTION. ACOUSTICAL LINER SHALL ALSO CLEAR AIR OUTLET NECK CONNECTION.
3. THE FOLLOWING SCHEDULE SHALL BE USED BY THE CONTRACTOR FOR ROUND TO FLAT OVAL DUCTWORK SIZE EQUIVALENTS:

ROUND, IN.	FLAT OVAL, (W"xH")
6"	7 x 4
8"	9 x 6, 10 x 4
10"	11 x 8, 12 x 6
12"	13 x 10, 14 x 8, 15 x 6
14"	15 x 12, 16 x 10, 17 x 8

4. THE CONTRACTOR SHALL BE RESPONSIBLE TO PROVIDING A ROUND TO FLAT OVAL TRANSITION SECTION OF DUCTWORK AS REQUIRED.

3 SQUARE NECK CEILING AIR OUTLET DETAIL
SCALE: NONE

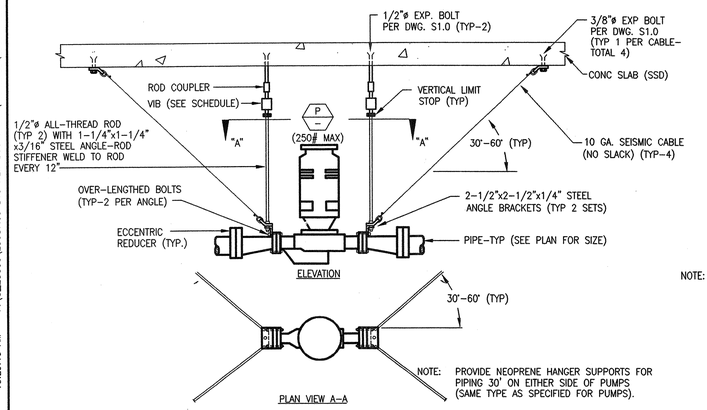

NOTE: PROVIDE NEOPRENE HANGER SUPPORTS FOR PIPING 30' ON EITHER SIDE OF PUMPS (SAME TYPE AS SPECIFIED FOR PUMPS).

9 IN-LINE PUMP HANGER SUPPORT DETAIL
NOT TO SCALE

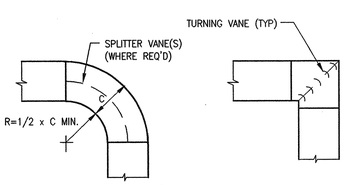

NOTE: THROAT RADIUS MAY BE REDUCED TO 6" IF SPLITTER VANES ARE ADDED INSIDE ELBOW

NOTE: USE ONLY WHERE RADIUSSED ELBOW WITH A THROAT RADIUS OF 6" OR MORE CANNOT BE PROVIDED.

90° OR LESS ELBOW, SQUARE ELBOW

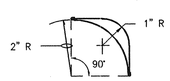

NOTE:

SMALL DOUBLE VANE USED ON DUCTS UP TO 1'-6" WIDE. SPACE AT 1-1/8" INTERVALS.

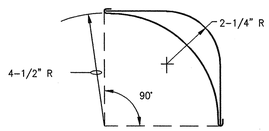

NOTE:

LARGE DOUBLE VANE USED ON DUCTS 1'-7" AND WIDER. SPACE AT 2-1/4" INTERVALS

TURNING VANES

7 DUCT CONSTRUCTION DETAILS
SCALE: NONE

MECHANICAL DESIGN STUDIO *inc*
1777 Oakland Blvd. Suite 210
Walnut Creek, California 94596
tel 925. 210-0100
fax 925. 210-0144
www.mds-sf.com
PROJECT # 23087.00

REGISTERED PROFESSIONAL ENGINEER DOREL ANDREI No. M 26561 EXP. 9/30/06 MECHANICAL STATE OF CALIFORNIA

DIABLO VALLEY COLLEGE

DIABLO VALLEY COLLEGE NEW BOOKSTORE

321 GOLF CLUB RD.
PLEASANT HILL, CALIFORNIA

DATE: 23 JULY, 2004

BID SET

SHEET TITLE:
DETAILS

IDENTIFICATION STAMP
DIVISION OF THE STATE ARCHITECT
105925
APPL 01
AC LE FLS EO SS AT
DATE: 5-12-04 JUL 2 6 2004

BLDG. ID: 098
ID CODE: 312098-109.01-A

DRAWN BY: JLW/LK
CHECKED BY: DA
JOB NO: 0307

SHEET
M4.2

07/19/04 10:29:46 AM F:\C_23000\23087.00 DVC NEW BOOKSTORE\DRAWINGS\23087M42.DWG jeff

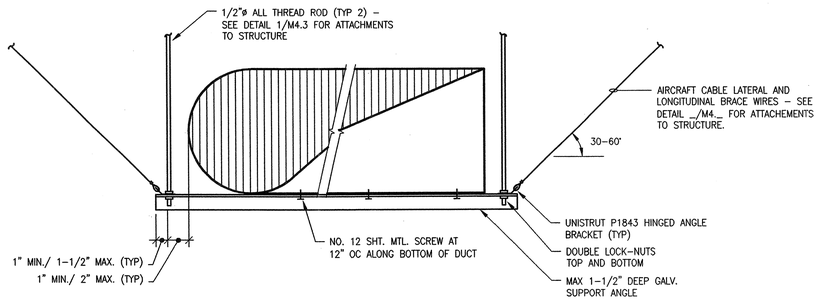

NOTES:
1. DETAIL ALSO APPLIES TO DUCT SILENCER/SOUND TRAPS.
2. CONSTRUCTION OF FLAT OVAL DUCT SHALL BE THE SAME AS FOR ROUND DUCT (SEE DETAIL1/M43 NOTE 1).
3. SUPPORT AT MINIMUM 10'–0" INTERVALS AND BRACE PER UBC REQUIREMENTS.

2 EXPOSED FLAT OVAL/ RECTANGULAR DUCT SUPPORT

SCALE: NONE

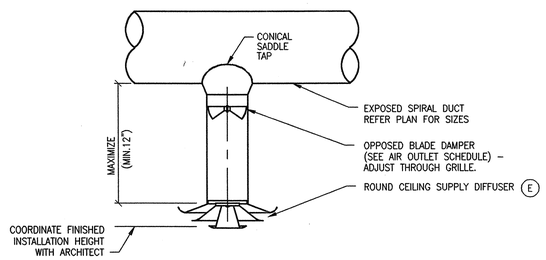

3 EXPOSED DUCT – DROPPED DIFFUSER

SCALE: NONE

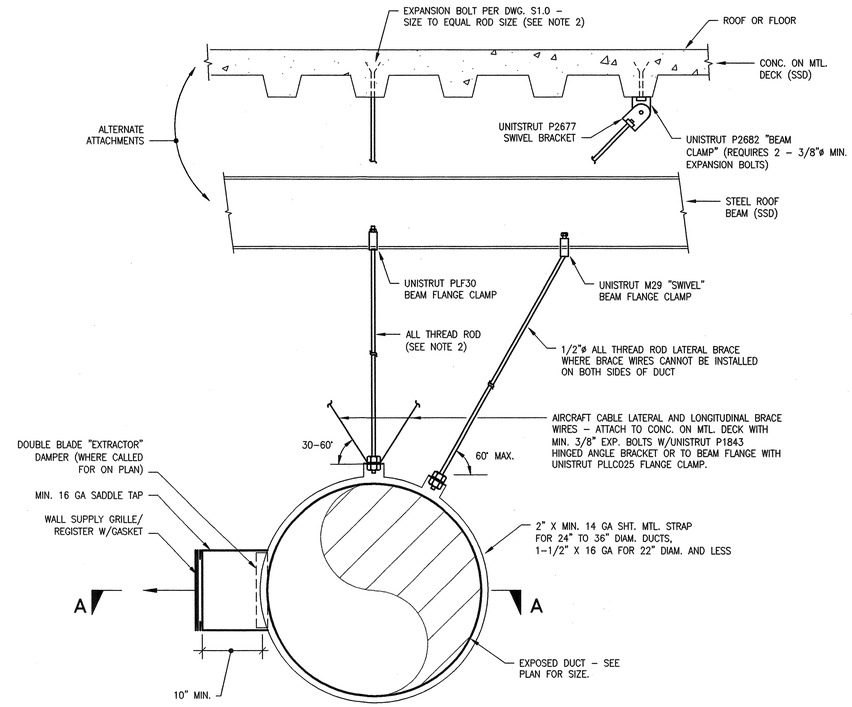

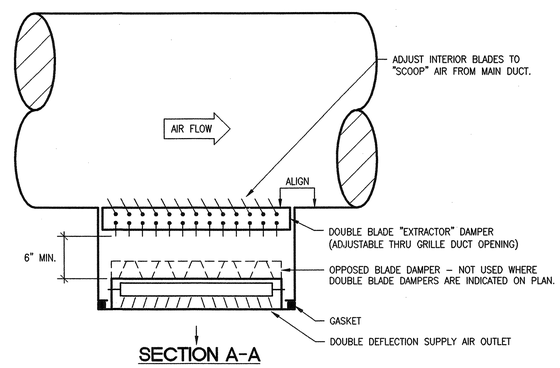

SECTION A-A

NOTES:
1. EXPOSED DUCTWORK SHALL BE FABRICATED WITH FLATTENED SPIRAL LOCKSEAMS AND INSTALLED IN MINIMUM 10'–0" LENGTHS USING ONLY BEADED SLEEVE JOINTS BETWEEN SECTIONS. SEAL JOINTS WITH HIGH VELOCITY SEALER APPLIED TO INTERIOR OF JOINTS PRIOR TO ASSEMBLY – WIPE OFF ALL EXCESS SEALANT ON EXTERIOR OF DUCT BEFORE IT DRYS.
2. USE 5/8" DIAMETER ALL THREAD ROD TO SUPPORT 24" TO 36" DIAMETER DUCTS, 1/2" FOR 22" DIAMETER AND LESS. SUPPORT AT MINIMUM OF 10'–0" INTERVALS AND WITHIN 12" OF EACH END OF DUCT.
3. PROVIDE LATERAL AND LONGITUDINAL SWAY BRACING PER UBC REQUIREMENTS AND WHERE SHOWN ON PLANS.

1 EXPOSED ROUND SUPPLY DUCT DETAIL

SCALE: NONE

MECHANICAL DESIGN STUDIO *inc*
1777 Oakland Blvd. Suite 210
Walnut Creek, California 94596
tel 925. 210–0100
fax 925. 210–0144
www.mds–sf.com
PROJECT # 23087.00

REGISTERED PROFESSIONAL ENGINEER DARREL ANGELL No. M 26561 EXP. 9/30/06 MECHANICAL STATE OF CALIFORNIA

DIABLO VALLEY COLLEGE

DIABLO VALLEY COLLEGE NEW BOOKSTORE

321 GOLF CLUB RD.
PLEASANT HILL, CALIFORNIA

DATE: 23 JULY, 2004

BID SET

SHEET TITLE:
DETAILS

IDENTIFICATION STAMP
DIVISION OF THE STATE ARCHITECT
105925
APPL 01
AC LE FLS EO SS AM
DATE: 5-12-04 JUL 26 2004

BLDG. ID: 098
ID CODE: 312098–109.01–A

DRAWN BY: JLW/LK
CHECKED BY: DA
JOB NO: 0307

SHEET
M4.3

07/19/04 10:29:51 AM F:\C_23000\23087.00 DVC NEW BOOKSTORE\DRAWINGS\23087M43.DWG jeff

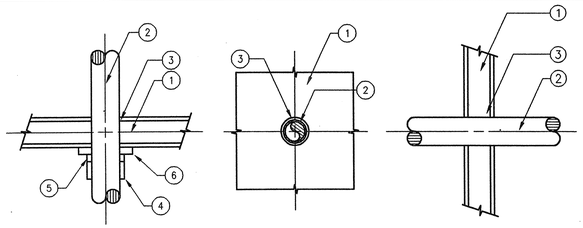

PACK SPACE BETWEEN PIPING AND PENETRATION OPENING WITH MATERIAL APPROVED BY UNDERWRITERS LABORATORIES FOR THROUGH PENETRATION FIRE STOP SYSTEMS. MATERIALS, METHODS, AND INSTALLATION SHALL BE IN ACCORDANCE WITH UL APPROVED LISTING AND SHALL BE DESIGNED TO ACT AS A FIRESTOP AS WELL AS A COLD SMOKE, NOXIOUS GAS AND WATER SEALANT. SUBMIT LISTING NUMBERS AND DETAILS FROM UL FIRE RESISTANT DIRECTORY FOR ALL SUCH SYSTEMS TO BE USED. INSULATE PIPES 3 FEET TO EITHER SIDE OF PENETRATION WITH MATERIAL SPECIFIED IN THE UL FIRE RESISTANCE DIRECTORY IF REQUIRED TO OBTAIN THE T– AND F– RATINGS.

1. WALL AND FLOOR
2. PIPE OR INSULATED PIPE
3. FIRE BARRIER – "3M PRODUCTS INC." FIRE BARRIER CAULK CP25 WB+, CP 25WB, CP 25 N/S AND S/L, FIRE BARRIER 2000+, 2000 AND 2003 SILICONE SEALANTS, MOLDABLE PUTTY.
4. PIPE COVERING FOR FLAME RETARDANT POLYPROPYLENE ACID WASTE PIPING FIRE STOPPING ASSEMBLY.
5. STEEL COLLAR FOR FRPP FIRE STOPPING ASSEMBLY.
6. PACKING MATERIAL FOR FRPP FIRE STOPPING ASSEMBLY.

USE FOLLOWING APPLICABLE UL SYSTEMS FOR THE CONSTRUCTION TYPES LISTED.

CONSTRUCTION TYPE	THROUGH PENETRATION FIRESTOP SYSTEM NUMBERS
CONCRETE FLOORS	CAJ1007 (F–2, 3, 4 HR; T–0 HR), CAJ1010 (F–2 HR; T–0 HR), CAJ1012 (F–1 HR; T–0 HR), CAJ1017 (F–2, 3 HR; T–0 HR), CAJ1021 (F–3 HR; T–0, 1.5 HR), CAJ1027 (F–3 HR; T–0 HR), CAJ1044 (F–2, 3, 4 HR; T–0 HR), CAJ1058 (F–3 HR; T–3 HR), CAJ1063 (F–3 HR; T–0.5 HR), CAJ1112 (F–2 HR; T–0 HR), CAJ1175 (F–2 HR; T–0 HR), CAJ5001 (F–1.5, 2, 3 HR; T–0, 0.5, 0.75, 1 HR), CAJ5002 (F–2, 3 HR; T–0, 0.5, 1 HR), CAJ5003 (F–2 HR; T–0.5, 1 HR), CAJ5024 (F–2, 3 HR; T–1, 1.5 HR), CAJ5060 (F–2, 3 HR; T–0, 0.75, 1, 1.5 HR), CBJ1020 (F–4 HR; T–0, 0.75, 1.5 HR) FOR FLAME RETARDANT POLYPROPYLENE ACID WASTE PIPING USE SYSTEM NO. FA 2002 (F–1, 1.5,2 HR; T–1, 1.5, 2 HR) (1)
CONCRETE OR MASONRY WALLS	CAJ1001 (F–3 HR; T–0 HR), CAJ1017 (F–2, 3 HR; T–0 HR), (3) CAJ1021 (F–3 HR; T–0, 1.5 HR), CAJ1027 (F–3 HR; T–0 HR), CAJ1044 (F–2, 3, 4 HR; T–0 HR), CAJ1058 (F–3 HR; T–0 HR), (2) CAJ1063 (F–3 HR; T–0.5 HR), CAJ1112 (F–2 HR; T–0 HR), CAJ1175 (F–2 HR; T–0 HR), CAJ5001 (F–1.5, 2, 3 HR; T–0, 0.5, 0.75, 1 HR), CAJ5002 (F–2, 3 HR; T–0, 0.5, 1 HR), CAJ5003 (F–2 HR; T–0.5, 1 HR), CAJ5024 (F–2, 3 HR; T–1, 1.5 HR), CAJ5060 (F–2, 3 HR; T–0, 0.75, 1, 1.5 HR), CBJ1020 (F–4 HR; T–0, 0.75, 1.5 HR)
GYPSUM WALLBOARD/STUD WALLS	WL1001 (F–1, 2, 3, 4 HR; T–0, 1, 2, 3, 4 HR), WL1002 (F–1, 2 HR; T–0 HR), WL1003 (F–1, 2 HR; T–0 HR), WL2002 (F–1, 1.5, 2 HR, T–0.75, 1, 1.5, 2 HR), WL2003 (F–1, 2 HR; T–1, 2 HR), WL2004 (F–2 HR; T–0.75, 1.5, 2 HR), WL2005 (F–1, 2 HR; T–0, 0.75, 1, 1.5, 2 HR), WL5001 (F–1, 2 HR; T–1, 1.5 HR), WL5002 (F–1, 2 HR; T–1, 2 HR)

FIRE PENETRATION THROUGH FIRE RATED PARTITION DETAIL

4 SCALE: NONE

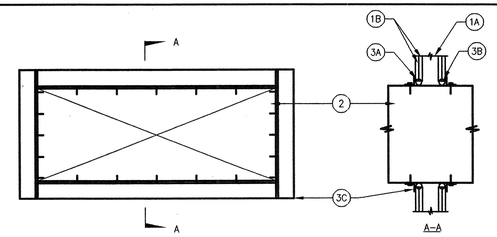

3M UL SYSTEM NO. WL7008

1. WALL ASSEMBLY – THE 1 AND 2 HR FIRE RATED GYPSUM WALLBOARD/STUD WALL ASSEMBLY SHALL BE CONSTRUCTED OF THE MATERIALS AND IN THE MANNER SPECIFIED IN THE INDIVIDUAL U400 SERIES WALL AND PARTITION DESIGNS IN THE UL FIRE RESISTANCE DIRECTORY AND SHALL INCLUDE THE FOLLOWING CONSTRUCTION FEATURES:

   A. STUDS – WALL FRAMING SHALL CONSIST OF STEEL CHANNEL STUDS TO BE MIN 3–1/2 IN. WIDE AND SPACED MAX 24 IN. OC. ADDITIONAL 3–1/2 IN. WIDE STEEL STUDS SHALL BE USED TO COMPLETELY FRAME OPENING.

   B. WALLBOARD, GYPSUM* – THICKNESS, TYPE, NUMBER OF LAYERS AND FASTENERS AS REQUIRED IN THE INDIVIDUAL WALL AND PARTITION DESIGN. MAX SIZE OF OPENING TO BE 1216 SQ. IN. WITH A MAX DIMENSION OF 38 IN.

   THE HOURLY F RATING OF THE FIRESTOP SYSTEM IS EQUAL TO THE HOURLY FIRE RATING OF THE WALL ASSEMBLY IN WHICH IT IS INSTALLED.

2. THROUGH–PENETRATION – NOM 36 IN. BY 30 (OR SMALLER) NO. 24 GAUGE (OR HEAVIER) GALV STEEL DUCT TO BE INSTALLED EITHER CONCENTRICALLY OR ECCENTRICALLY WITHIN THE FIRESTOP SYSTEM. AN ANNULAR SPACE OF MIN 0 IN. (POINT CONTACT) TO MAX 2 IN. IS REQUIRED WITHIN THE FIRESTOP SYSTEM. STEEL DUCT TO BE RIGIDLY SUPPORTED ON BOTH SIDES OF FLOOR OR WALL ASSEMBLY.

3. FIRESTOP SYSTEM – THE DETAILS OF THE FIRESTOP SYSTEM SHALL BE AS FOLLOWS:

   A. PACKING MATERIAL (OPTIONAL) – POLYETHYLENE BACKER ROD, MINERAL WOOL BATT INSULATION OR FIBERGLASS BATT INSULATION FRICTION–FIT INTO ANNULAR SPACE FOR 2 HR RATED WALL ASSEMBLIES ONLY. PACKING MATERIAL TO BE RECESSED FROM BOTH SURFACES OF WALL TO ACCOMODATE THE REQUIRED THICKNESS OF FILL MATERIAL (ITEM 3B).

   B. FILL, VOID OR CAVITY MATERIAL* – CAULK – MIN 5/8 IN. THICKNESS OF FILL MATERIAL APPLIED WITHIN ANNULUS, FLUSH WITH BOTH SURFACES OF WALL ASSEMBLY. AT THE POINT CONTACT LOCATION BETWEEN DUCT AND WALLBOARD, A MIN 1/4 IN. DIAM BEAD OF SEALANT SHALL BE APPLIED AT THE WALLBOARD/DUCT INTERFACE ON BOTH SURFACES OF WALL ASSEMBLY.

   MINNESOTA MINING & MANUFACTURING CO. – CP–25 WB+

   C. RETAINING ANGLES – MIN 16 GAUGE GALV STEEL ANGLES SIZED TO LAP DUCT A MIN OF 2 IN. AND LAP WALL SURFACES OF A MIN OF 1 IN. ANGLES ATTACHED TO DUCT ON BOTH SIDES OF WALL WITH MIN 1/2 IN. LONG, NO. 10 (OR LARGER) SHEET METAL SCREWS SPACED A MAX OF 1 IN. FROM EACH END OF DUCT AND SPACED A MAX OF 6 IN. OC.

*BEARING THE UL CLASSIFICATION MARKING

NOTE: SUBMIT JOB SPECIFIC DETAILS FROM FIRESTOP MANUFACTURER FOR ALL OTHER APPLICATIONS AND WHERE ASSOCIATED OPENING EXCEED MAXIMUM PARTITION OPENING LISTED ABOVE. MANUFACTURER'S DETAILS FOR NON TESTED DUCT SIZES TO BE BASED ON TEST RESULTS OF CURRENT UL LISTED APPLICATIONS IN SIMILAR CIRCUMSTANCES. DETAILS MUST BE APPROVED BY SITE INSPECTOR.

RECTANGULAR DUCT THRU-PENETRATION FIRESTOP

3 SCALE: NONE

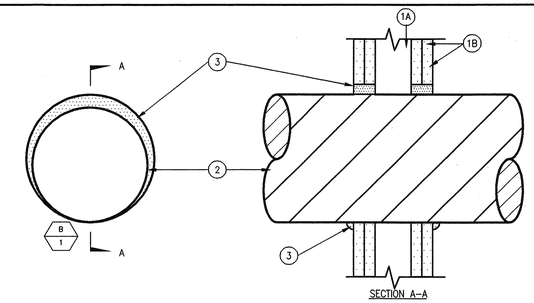

3M UL SYSTEM NO. WL7013

1. WALL ASSEMBLY – THE 2 HR FIRE RATED GYPSUM WALLBOARD/STUD WALL ASSEMBLY SHALL BE CONSTRUCTED OF THE MATERIALS AND IN THE MANNER SPECIFIED IN THE INDIVIDUAL U400 SERIES WALL AND PARTITION DESIGNS IN THE UL FIRE RESISTANCE DIRECTORY AND SHALL INCLUDE THE FOLLOWING CONSTRUCTION FEATURES:

   A. STUDS – WALL FRAMING SHALL CONSIST OF STEEL CHANNEL STUDS TO BE MIN 3–1/2 IN. WIDE AND SPACED MAX 24 IN. OC. ADDITIONAL 3–1/2 IN. WIDE STEEL STUDS SHALL BE uSED TO COMPLETELY FRAME OPENING.

   B. WALLBOARD, GYPSUM* – TWO LAYERS OF MIN. 5/8 IN. THICK GYPSUM WALLBOARD, AS SPECIFIED IN THE INDIVIDUAL WALL AND PARTITION DESIGN. MAX DIAM. OF OPENING IS 17–1/2 IN.

2. THROUGH–PENETRATION – ONE STEEL DUCT TO BE INSTALLED EITHER CONCENTRICALLY OR ECCENTRICALLY WITHIN THE FIRESTOP SYSTEM. AN ANNULAR SPACE OF MIN 0 IN. TO MAX 1–1/2 IN. IS REQUIRED WITHIN THE FIRESTOP SYSTEM. STEEL DUCT TO BE RIGIDLY SUPPORTED ON BOTH SIDES OF WALL ASSEMBLY. THE FOLLOWING SIZES OF STEEL DUCTS MAY BE USED:

   A. STEEL DUCT – NOM 16 IN. DIAM (OR SMALLER) NO. 24 GAUGE (OR HEAVIER) SPIRAL WOUND GALV STEEL DUCT.

   B. STEEL VENT DUCT – NOM 10 IN. DIAM (OR SMALLER) NO. 28 GAUGE (OR HEAVIER) GALV STEEL VENT DUCT.

3. FILL, VOID OR CAVITY MATERIAL* – CAULK – MIN 1–1/4 IN. THICKNESS OF FILL MATERIAL APPLIED WITHIN ANNULUS, FLUSH WITH BOTH SURFACES OF WALL ASSEMBLY. AT THE POINT CONTACT LOCATION BETWEEN DUCT AND WALLBOARD, A MIN 1/4 IN. DIAM BEAD OF SEALANT SHALL BE APPLIED AT THE WALLBOARD/DUCT INTERFACE ON BOTH SURFACES OF WALL ASSEMBLY.

   MINNESOTA MINING & MANUFACTURING CO. – CP–25 WB+

*BEARING THE UL CLASSIFICATION MARKING

NOTE: SUBMIT JOB SPECIFIC DETAILS FROM FIRESTOP MANUFACTURER FOR ALL OTHER APPLICATIONS AND WHERE ASSOCIATED OPENING EXCEED MAXIMUM PARTITION OPENING LISTED ABOVE. MANUFACTURER'S DETAILS FOR NON–TESTED DUCT SIZES TO BE BASED ON TEST RESULTS OF CURRENT UL LISTED APPLICATIONS IN SIMILAR CIRCUMSTANCES. DETAILS MUST BE APPROVED BY SITE INSPECTOR.

ROUND DUCT THRU-PENETRATION FIRESTOP

1 SCALE: NONE

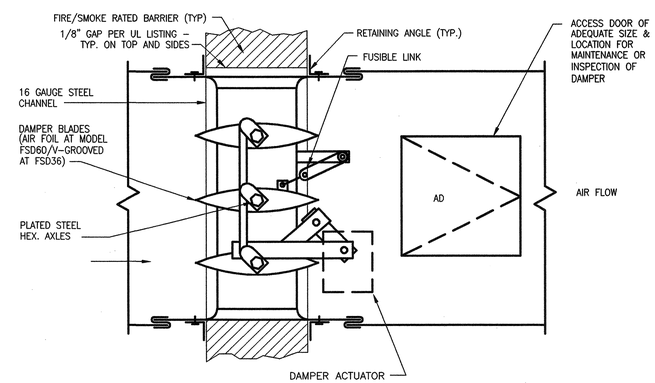

NOTES:

1. USE RUSKIN MODEL FSD 36 COMBINATION FIRE–SMOKE DAMPER (MODEL FSD60 WHERE UNDER 12"
2. WIDE) WITH 120 VOLT DAMPER MOTOR AND SPRING RETURN FOR AUTOMATIC/FAIL–SAFE CLOSURE WHEN POWER IS INTERRUPTED VIA BUILDING FULL COVERAGE SMOKE DETECTION SYSTEM, LEAKAGE CLASS II MINIMUM, 165° FUSIBLE LINK AND END SWITCHES FOR REMOTE MONITORING BY MASTER INDICATOR PANELS (SEE NOTE 6 BELOW).
2. DAMPER, ELECTRIC ACTUATOR AND SMOKE DETECTOR SHALL CARRY CA. STATE FIRE MARSHALL LISTING NUMBER.
3. DAMPER SHALL BE CONSTRUCTED, TESTED & INSTALLED IN ACCORDANCE WITH U.L. STANDARDS 555 & 555S.
4. PROVIDE AT ALL AREA OR OCCUPANCY SEPARATION WALLS/CEILINGS AND PENETRATIONS OF FIRE RATED EXIT CORRIDORS AND STAIR WALLS/CEILINGS WHERE DUCTS OPEN INTO CORRIDOR OR STAIR.
5. COORDINATE ELECTRICAL POWER AND REQUIREMENTS WITH ELECTRICAL CONTRACTOR.
6. PROVIDE ONE (1) RUSKIN MODEL MCP10/ MCP20 MASTER REMOTE INDICATION PANEL TO BE LOCATED IN ELEC 115 TO CONTROL ALL FSDs ON ENTIRE PROJECT. PANEL SHALL HAVE GREEN AND RED INDICATION LIGHTS AND "PUSH TO TEST" DAMPER CYCLING BUTTON FOR EACH DAMPER AND NO OVERRIDE SWITCHES.

FIRE-SMOKE DAMPER (FSD) DETAIL

2 SCALE: NONE

MECHANICAL DESIGN STUDIO *inc*
1777 Oakland Blvd. Suite 210
Walnut Creek, California 94596
tel 925. 210–0100
fax 925. 210–0144
www.mds–sf.com
PROJECT # 23087.00

REGISTERED PROFESSIONAL ENGINEER DAREL ANGEL No. M 26561 EXP. 9/30/06 MECHANICAL STATE OF CALIFORNIA

DIABLO VALLEY COLLEGE

DIABLO VALLEY COLLEGE NEW BOOKSTORE

321 GOLF CLUB RD.
PLEASANT HILL, CALIFORNIA

DATE: 23 JULY, 2004

BID SET

SHEET TITLE:
DETAILS

IDENTIFICATION STAMP
DIVISION OF THE STATE ARCHITECT
105925
APPL 01
AC LE FLS ED SS AI
DATE: 5-12-04 JUL 26 2004

BLDG. ID: 098
ID CODE: 312098–109.01–A

DRAWN BY: JLW/LK
CHECKED BY: DA
JOB NO: 0307

SHEET
M4.4

07/19/04 10:29:58 AM F:\C_23000\23087.00 DVC NEW BOOKSTORE\DRAWINGS\23087M44.DWG jeff

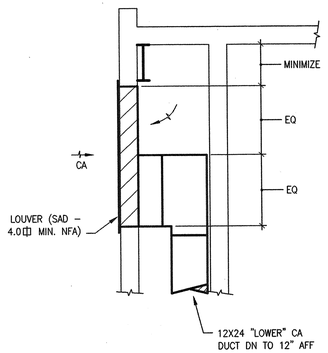

7 SECTION AT BOILER RM CA LOUVER
SCALE: 1/2"=1'-0"

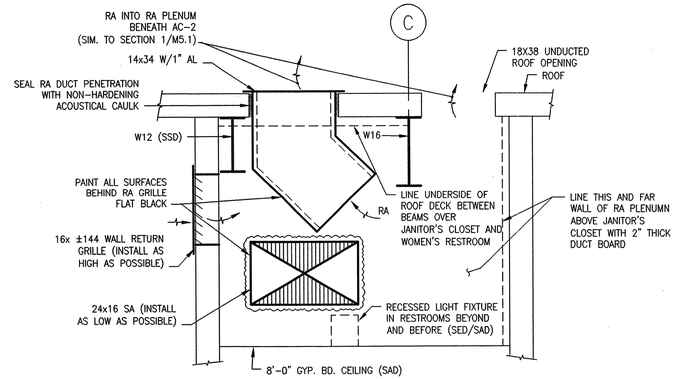

4 SECTION AT AC-2 RETURN AIR OPENINGS THRU ROOF
SCALE: 3/4"=1'-0"

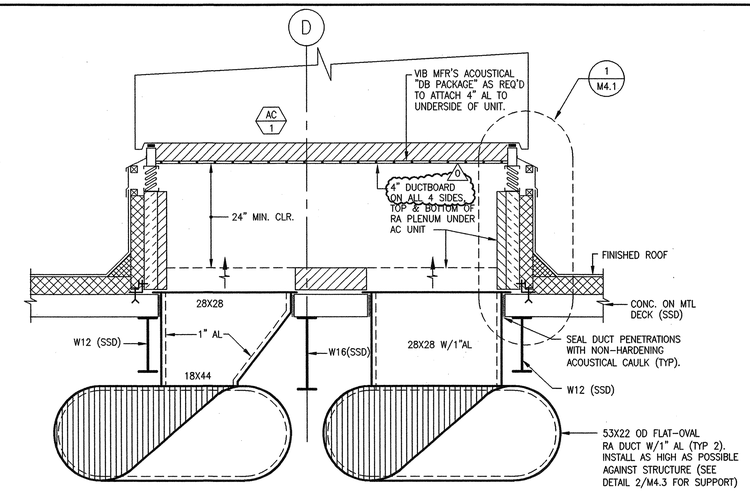

1 SECTION AT AC-1 RA DUCT DROPS
SCALE: 3/4"=1'-0"

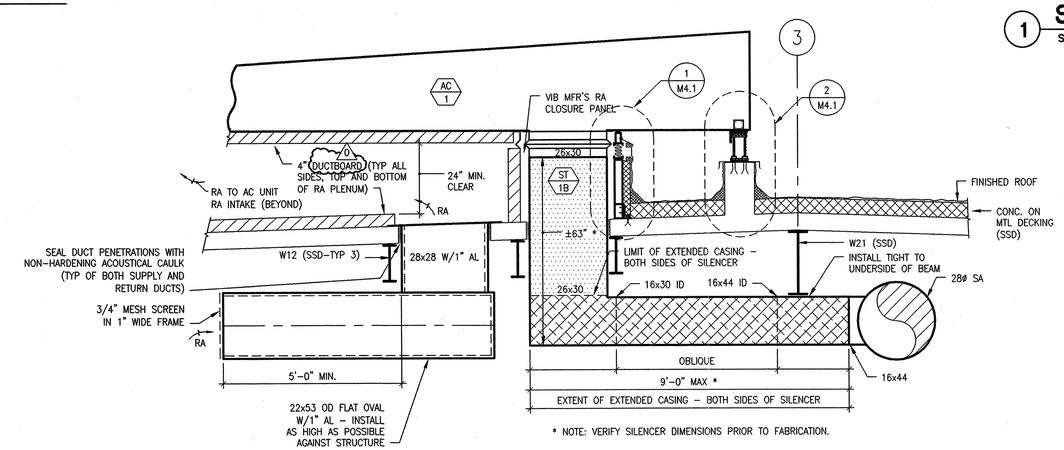

* NOTE: VERIFY SILENCER DIMENSIONS PRIOR TO FABRICATION.

5 LONGITUDINAL SECTION AT AC-1 SA AND RA DUCT DROPS
SCALE: 1/2"=1'-0"

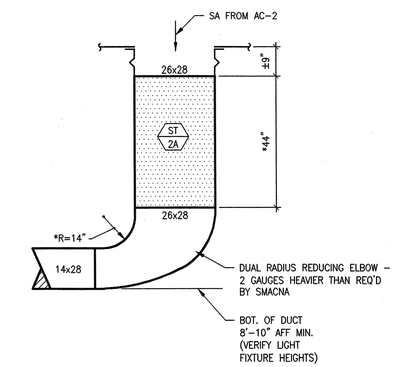

* VERIFY DIMENSIONS DO NOT EXCEED MINIMUM BOTTOM OF DUCT ELEVATION GIVEN.

2 SECTION AT DUCT SILENCER ST-2A
SCALE: 1/2"=1'-0"

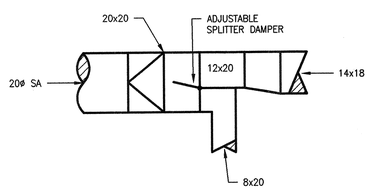

8 SECTION AT SA DUCTS IN SERVER ROOM
SCALE: 1/2"=1'-0"

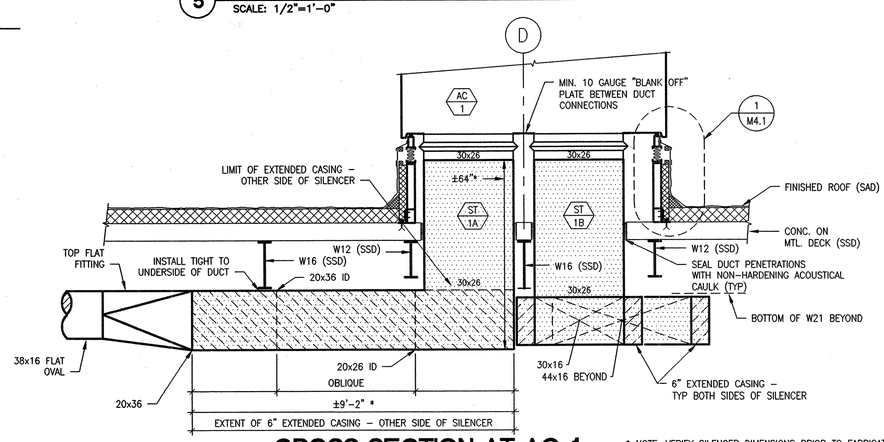

* NOTE: VERIFY SILENCER DIMENSIONS PRIOR TO FABRICATION.

6 CROSS SECTION AT AC-1 SA DUCT DROPS
SCALE: 1/2"=1'-0"

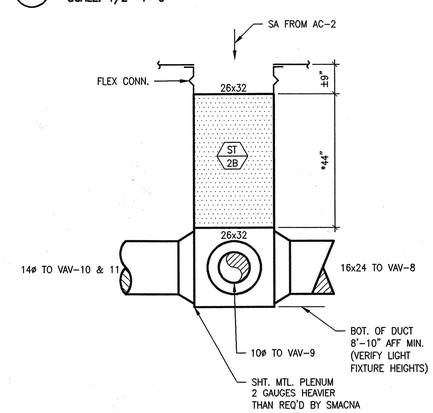

* VERIFY DIMENSIONS DO NOT EXCEED MINIMUM BOTTOM OF DUCT ELEVATION GIVEN.

3 SECTION AT DUCT SILENCER ST-2B
SCALE: 1/2"=1'-0"

MECHANICAL DESIGN STUDIO *inc*
1777 Oakland Blvd., Suite 210
Walnut Creek, California 94596
tel 925. 210-0100
fax 925. 210-0144
www.mds-sf.com
PROJECT # 23087.00

REGISTERED PROFESSIONAL ENGINEER DOREL ANGEL No. M 26561 EXP. 9/30/06 MECHANICAL STATE OF CALIFORNIA

DIABLO VALLEY COLLEGE

DIABLO VALLEY COLLEGE NEW BOOKSTORE

321 GOLF CLUB RD.
PLEASANT HILL, CALIFORNIA

DATE: 23 JULY, 2004

0 REVISIONS- 23 JULY, 2004

BID SET

SHEET TITLE:
SECTIONS

IDENTIFICATION STAMP
DIVISION OF THE STATE ARCHITECT
105925
APPL 01
AC 4F FLS EQ SS A1
DATE: 5-12-04 JUL 26 2004

BLDG. ID: 098
ID CODE: 312098-109.01-A

DRAWN BY: JLW/LK
CHECKED BY: DA
JOB NO: 0307

SHEET
M5.1

07/19/04 10:30:03 AM F:\C_23000\23087.00 DVC NEW BOOKSTORE\DRAWINGS\23087M51.DWG jeff

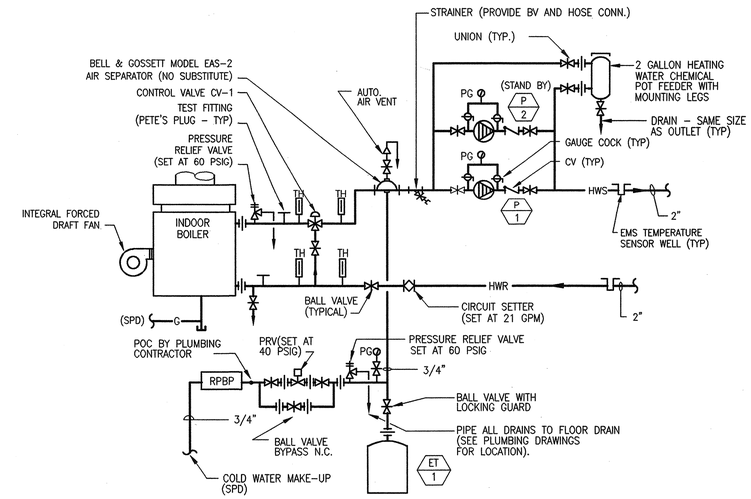

1 HEATING WATER PIPING DIAGRAM

SCALE: NONE

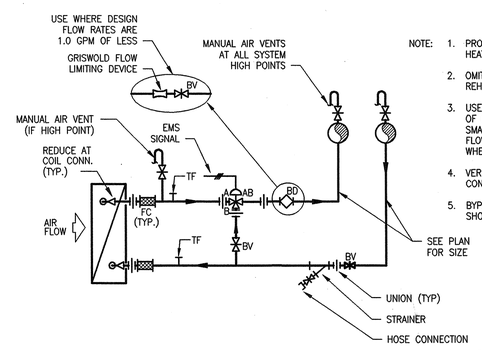

NOTE:
1. PROVIDE 3-WAY AUTOMATIC CONTROL VALVE AT AC-1 HEATING COIL AND WHERE CALLED OUT IN VAV SCHEDULE. 0
2. OMIT TEST FITTINGS, STRAINER AND FCs AT ALL VAV REHEAT COILS.
3. USE GRISWALD FLOW LIMITING BALANCING DEVICES INSTEAD OF CIRCUIT SETTERS FOR FLOW RATES OF 1.0 GPM AND SMALLER. PROVIDE BALL VALVES NEXT TO EACH GRISWALD FLOW LIMITING DEVICE TO PROVIDE SHUT-OFF CAPABILITIES WHEREVER THIS CHANGE IS MADE.
4. VERIFY PROPER ARRANGEMENT AT CONTROL VALVE WITH CONTROL VALVE MANUFACTURER PRIOR TO PIPING.
5. BYPASS PIPE SIZE SHALL EQUAL BRANCH PIPE SIZE SHOWN ON PLAN

2 COIL PIPING: 3-WAY ACV

SCALE: NONE

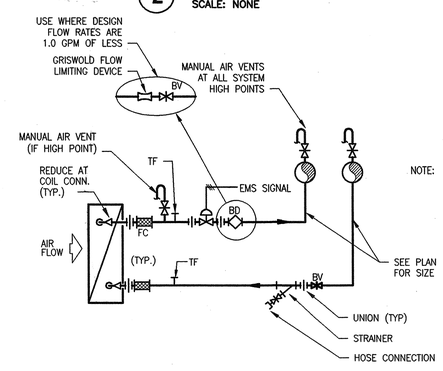

NOTE:
1. OMIT TEST FITTINGS, STRAINER AND FCs AT ALL VAV REHEAT COILS.
2. USE GRISWALD FLOW LIMITING BALANCING DEVICES INSTEAD OF CIRCUIT SETTERS FOR FLOW RATES OF 1.0 GPM AND SMALLER. PROVIDE BALL VALVES NEXT TO EACH GRISWALD FLOW LIMITING DEVICE TO PROVIDE SHUT-OFF CAPABILITIES WHEREVER THIS CHANGE IS MADE.

3 COIL PIPING: 2-WAY ACV

SCALE: NONE

MECHANICAL DESIGN STUDIO *inc*
1777 Oakland Blvd. Suite 210
Walnut Creek, California 94596
tel 925. 210-0100
fax 925. 210-0144
www.mds-sf.com
PROJECT # 23087.00

REGISTERED PROFESSIONAL ENGINEER DOUGLAS ANDERSON No. M 26561 EXP. 9/30/06 MECHANICAL STATE OF CALIFORNIA

DIABLO VALLEY COLLEGE

DIABLO VALLEY COLLEGE NEW BOOKSTORE

321 GOLF CLUB RD.
PLEASANT HILL, CALIFORNIA

DATE: 23 JULY, 2004

0 REVISIONS- 23 JULY, 2004

BID SET

SHEET TITLE:

PIPING DIAGRAMS

IDENTIFICATION STAMP
DIVISION OF THE STATE ARCHITECT
105925
APPL 01
AC 15 FLS EO SS A1
DATE: 5-12-04 JUL 26 2004

BLDG. ID: 098
ID CODE: 312098-109.01-A

DRAWN BY: JLW/LK
CHECKED BY: DA
JOB NO: 0307

SHEET M6.1

07/19/04 10:30:08 AM F:\C_23000\23087.00 DVC NEW BOOKSTORE\DRAWINGS\23087M61.DWG jeff

ENVELOPE COMPLIANCE SUMMARY — Performance ENV-1

PROJECT NAME: Diablo Valley College Bookstore | DATE: 12/7/2003

OPAQUE SURFACES

#	Surface Type	Framing Type	Area	U-Fac.	Act. Azm.	Tilt	Solar Gains Y/N	Form 3 Reference	Location / Comments
1	Roof	Metal	1,891	0.050	0	0	X	R-19 Built Up Roof	Bridge/Walkway Zone
2	Wall	Metal	65	0.145	0	90	X	R-19 Metal Stud Wall	Bridge/Walkway Zone
3	Wall	Metal	1	0.438	0	90	X	Aluminum Panel Wall	Bridge/Walkway Zone
4	Wall	Metal	242	0.180	0	90	X	Spandrel Wall	Bridge/Walkway Zone
5	Wall	Metal	117	0.145	90	90	X	R-19 Metal Stud Wall	Bridge/Walkway Zone
6	Wall	Metal	1	0.438	90	90	X	Aluminum Panel Wall	Bridge/Walkway Zone
7	Wall	Metal	26	0.180	90	90	X	Spandrel Wall	Bridge/Walkway Zone
8	Wall	Metal	208	0.145	270	90	X	R-19 Metal Stud Wall	Bridge/Walkway Zone
9	Floor	Metal	610	0.142	0	180	X	Insulated Raised Slab Floor	Bridge/Walkway Zone
10	Roof	Metal	5,533	0.050	0	0	X	R-19 Built Up Roof	Main Retail Zone
11	Wall	Metal	783	0.145	0	90	X	R-19 Metal Stud Wall	Main Retail Zone
12	Wall	Metal	1,375	0.145	180	90	X	R-19 Metal Stud Wall	Main Retail Zone
13	Door	None	24	0.581	180	90	X	Hollow Metal Door	Main Retail Zone
14	Wall	Metal	473	0.145	0	90	X	R-19 Metal Stud Wall	Main Retail Zone
15	Wall	Metal	1,791	0.145	270	90	X	R-19 Metal Stud Wall	Main Retail Zone
16	Wall	Metal	419	0.145	270	90	X	R-19 Metal Stud Wall	Main Retail Zone
17	Wall	Metal	299	0.189	0	90	X	R-11 Metal Stud Wall	Main Retail Zone
18	Roof	Metal	583	0.050	0	0	X	R-19 Built Up Roof	Open Office/EPer Zone
19	Wall	Metal	372	0.145	90	90	X	R-19 Metal Stud Wall	Open Office/EPer Zone
20	Wall	Metal	130	0.145	180	90	X	R-19 Metal Stud Wall	Open Office/EPer Zone

FENESTRATION SURFACES

Site Assembled Glazing ☐ Check box if Building is >= 100,000 sqft of CFA and >= 10,000 sqft vertical glazing then NFRC Certification is required. Follow NFRC 100-SB Procedures and submit NFRC Label Certificate Form.

#	Type	Area	U-Fac.	Act. Azm.	SHGC	Glazing Type	Location / Comments
1	Window	544	0.310	0	0.34	DVS-Bookstore Glass	Bridge/Walkway Zone
2	Window	60	0.310	90	0.34	DVS-Bookstore Glass	Bridge/Walkway Zone
3	Skylight	225	0.290	0	0.28	Kalwall-Cryst/Sunwof	Main Retail Zone
4	Window	192	0.310	0	0.34	DVS-Bookstore Glass	Main Retail Zone
5	Window	73	0.310	270	0.34	DVS-Bookstore Glass	Main Retail Zone
6	Window	70	0.310	270	0.34	DVS-Bookstore Glass	Main Retail Zone
7	Window	98	0.310	90	0.34	DVS-Bookstore Glass	Open Office/EPer Zone
8	Window	33	0.310	90	0.34	DVS-Bookstore Glass	Open Office/SPer Zone
9	Window	98	0.310	180	0.34	DVS-Bookstore Glass	Open Office/SPer Zone
10	Window	279	0.850	0	0.70	Double Metal Clear Default	Main Entry/N Per Zone
11	Window	646	0.310	0	0.34	DVS-Bookstore Glass	Main Entry/N Per Zone
12	Window	279	0.850	90	0.70	Double Metal Clear Default	Main Entry/E Per Zone
13	Window	646	0.310	90	0.34	DVS-Bookstore Glass	Main Entry/E Per Zone
14	Window	18	0.310	90	0.34	DVS-Bookstore Glass	Main Entry/E Per Zone
15	Window	64	0.310	180	0.34	DVS-Bookstore Glass	Main Entry/S Per Zone

EXTERIOR SHADING

#	Exterior Shade Type	SHGC	Window Hgt. Wd.	Overhang Len. Hgt. LExt.RExt.	Left Fin Dist. Len. Hgt.	Right Fin Dist. Len. Hgt.
1	None	0.76				
2	None	0.76				
3	None	1.00				
4	None	0.76				
5	None	0.76				
6	None	0.76				
7	None	0.76				
8	None	0.76				
9	None	0.76				
10	None	0.76				
11	None	0.76				
12	None	0.76				
13	None	0.76				
14	None	0.76				
15	None	0.76				

Run Initiation Time: 12/07/03 13:50:39 Run Code: 1070833839

PERFORMANCE CERTIFICATE OF COMPLIANCE — Part 3 of 3 PERF-1

PROJECT NAME: Diablo Valley College Bookstore | DATE: 12/7/2003

ZONE INFORMATION

System Name	Zone Name	Occupancy Type	Floor Area (sqft.)	Inst. LPD (W/sf)	Port. LPD (W/sf)	Ctrl. Credits (W/sf)	Tailored LPD (W/sf)	Proc. Loads (W/sf)
AC-1	Bridge/Walkway Zone	Comp Bldg School	1,891	*1.400				
	Main Retail Zone	Comp Bldg School	6,308	*1.400				
AC-2	Open Office/EPer Zone	Comp Bldg School	583	*1.400				
	Open Office/SPer Zone	Comp Bldg School	507	*1.400				
	Open Office/Core Zone	Comp Bldg School	1,100	*1.400				
	Main Entry/N Per Zone	Comp Bldg School	426	*1.400				
	Main Entry/E Per Zone	Comp Bldg School	790	*1.400				
	Main Entry/S Per Zone	Comp Bldg School	515	*1.400				
	Main Entry/Core Zone	Comp Bldg School	1,963	*1.400				
	Basement Zone	Comp Bldg School	1,388	*1.400				
EH-1	Receiving Office Zone	Comp Bldg School	145	*1.400				
Server	Server Zone	Comp Bldg School	144	*1.400				

Notes: 1. See LTG-1 (items marked with asterisk, see LTG-2 by others) 2. See LTG-3 3. See LTG-4 — Items above require special documentation

EXCEPTIONAL CONDITIONS COMPLIANCE CHECKLIST

The local enforcement agency should pay special attention to the items specified in this checklist. These items require special written justification and documentation, and special verification to be used with the performance approach. The local enforcement agency determines the adequacy of the justification, and may reject a building or design that otherwise complies based on the adequacy of the special justification and documentation submitted.

	Plan	Field
The Construction Assembly 8" Concrete Underground Wall, Furred has an Outside Absorptivity of 0.00.		
The HVAC System "AC-2 (S30-FCS25)" Includes a Variable Speed Drive on the Fan.		

The exceptional features listed in this performance approach application have specifically been reviewed. Adequate written justification and documentation for their use have been provided by the applicant.

Authorized Signature or Stamp _____

Run Initiation Time: 12/07/03 13:50:39 Run Code: 1070833839

PERFORMANCE CERTIFICATE OF COMPLIANCE — Part 2 of 3 PERF-1

Diablo Valley College Bookstore | DATE: 12/7/2003

ANNUAL SOURCE ENERGY USE SUMMARY (kBtu/sqft-yr)

ENERGY COMPONENT	Standard Design	Proposed Design	Compliance Margin
Space Heating	21.84	7.35	14.49
Space Cooling	39.21	37.98	1.24
Indoor Fans	44.30	42.98	1.31
Heat Rejection	0.00	0.00	0.00
Pumps & Misc.	0.57	0.53	0.04
Domestic Hot Water	24.25	24.29	-0.04
Lighting	41.23	41.23	0.00
Receptacle	16.94	16.94	0.00
Process	0.00	0.00	0.00
TOTALS:	188.34	171.31	17.04

Percent better than Standard: 9.0% (9.0% excluding process)

BUILDING COMPLIES

GENERAL INFORMATION

Building Orientation	(North) 0 deg	Conditioned Floor Area	15,760 sqft.
Number of Stories	2	Unconditioned Floor Area	0 sqft.
Number of Systems	4	Conditioned Footprint Area	11,263 sqft.
Number of Zones	12		

	Orientation	Gross Area	Glazing Area	Glazing Ratio
Front Elevation	(North)	4,405 sqft.	1,652 sqft.	37.7%
Left Elevation	(East)	3,095 sqft.	1,135 sqft.	36.7%
Rear Elevation	(South)	2,658 sqft.	162 sqft.	6.1%
Right Elevation	(West)	2,681 sqft.	143 sqft.	5.3%
Total		12,840 sqft.	3,101 sqft.	24.1%
Roof		10,837 sqft.	225 sqft.	2.1%

	Standard	Proposed
Lighting Power Density	1.400 W/sqft.	1.400 W/sqft.
Prescriptive Env. Heat Loss	4,172 Btu/h	3,403 Btu/h
Prescriptive Env. Heat Gain	379,644 Btu/h-F	335,255 Btu/h-F

LEED™ Energy & Atmosphere Credit

Savings vs. Title 24 [1]	9.94%
Energy Performance Credit [2]	1 Points

1. excludes process and receptacle 2. see LEED table 5-c or 5-d

Remarks:

Run Initiation Time: 12/07/03 13:50:39 Run Code: 1070833839

PERFORMANCE CERTIFICATE OF COMPLIANCE — Part 1 of 3 PERF-1

PROJECT NAME: Diablo Valley College Bookstore | DATE: 12/7/2003

PROJECT ADDRESS: 321 Golf Club Road Pleasant Hill | Building Permit #

PRINCIPAL DESIGNER - ENVELOPE: BSA Architects | TELEPHONE: 415-781-1526 | Checked by/Date

DOCUMENTATION AUTHOR: Gabel Dodd / EnergySoft, llc | TELEPHONE: (415) 883-5900 | Enforcement Agency Use

GENERAL INFORMATION

DATE OF PLANS: 10-15-03 | BUILDING CONDITIONED FLOOR AREA: 15,760 Sq.Ft. | CLIMATE ZONE: 12

BUILDING TYPE: [X] NONRESIDENTIAL ☐ HIGH RISE RESIDENTIAL ☐ HOTEL/MOTEL GUEST ROOM

PHASE OF CONSTRUCTION: [X] NEW CONSTRUCTION ☐ ADDITION ☐ ALTERATION ☐ EXISTING + ADDITION

STATEMENT OF COMPLIANCE

This Certificate of Compliance lists the building features and performance specifications needed to comply with Title 24, Parts 1 and 6, of the State Building Code. This certificate applies only to a Building using the performance compliance approach.

DOCUMENTATION AUTHOR: Brandon Val Verde | SIGNATURE: | DATE:

The Principal Designers hereby certify that the proposed building design represented in the construction documents and modelled for this permit application are consistent with all other forms and worksheets, specifications, and other calculations submitted with this permit application. The proposed building as designed meets the energy efficiency requirements of the State Building Code, Title 24, Part 6.

ENV. LTG. MECH.

☐ ☐ [X] 1. I hereby affirm that I am eligible under the provisions of Division 3 of the Business and Professions Code to sign this document as the person responsible for its preparation; and that I am licensed as a civil engineer, mechanical engineer, electrical engineer or architect.

☐ ☐ ☐ 2. I affirm that I am eligible under the provisions of Division 3 of the Business and Professions Code Section 5537.2 or 6737.3 to sign this document as the person responsible for its preparation; and that I am a licensed contractor preparing documents for work that I have contracted to perform.

☐ ☐ ☐ 3. I affirm that I am eligible under Division 3 of the Business and Professions Code to sign this document because it pertains to a structure or type of work described as exempt pursuant to Business and Professions Code Sections 5537, 5538, and 6737.1. (These sections of the Business and Professions Code are printed in full in the Nonresidential Manual.)

ENVELOPE COMPLIANCE

Indicate location on plans of Note Block for Mandatory Measures | Required Forms: ENV-1

PRINCIPAL ENVELOPE DESIGNER - NAME: BSA Architects | SIGNATURE: | LIC. NO.: | DATE: 12/07/03

LIGHTING COMPLIANCE

Indicate location on plans of Note Block for Mandatory Measures | Required Forms: Lighting Compliance Not In The Scope Of This Submittal

PRINCIPAL LIGHTING DESIGNER - NAME: | SIGNATURE: | LIC. NO.: | DATE: 12/07/03

MECHANICAL COMPLIANCE

Indicate location on plans of Note Block for Mandatory Measures | Required Forms: M6.2 | MECH-1, MECH-2, MECH-3

PRINCIPAL MECHANICAL DESIGNER - NAME: Mechanical Design Studio | SIGNATURE: | LIC. NO.: M26561 | DATE: 12/07/03

Run Initiation Time: 12/07/03 13:50:39 Run Code: 1070833839

CERTIFICATE OF COMPLIANCE — Performance MECH-1

PROJECT NAME: Diablo Valley College Bookstore | DATE: 12/7/2003

SYSTEM FEATURES

SYSTEM NAME	MECHANICAL SYSTEMS: AC-2	EH-1	Server	NOTE TO FIELD
TIME CONTROL	Programmable Switch	Programmable Switch	Programmable Switch	
SETBACK CONTROL	Heating Required	Heating Required	Heating Required	
ISOLATION ZONES	n/a	n/a	n/a	
HEAT PUMP THERMOSTAT?	n/a	n/a	n/a	
ELECTRIC HEAT?	n/a	n/a	n/a	
FAN CONTROL	Variable Speed	Constant Volume	Constant Volume	
VAV MINIMUM POSITION CONTROL?	Yes	No	No	
SIMULTANEOUS HEAT/COOL?	Yes	No	No	
HEATING SUPPLY RESET	Constant Temp	Constant Temp	Constant Temp	
COOLING SUPPLY RESET	OA Reset	Constant Temp	Constant Temp	
HEAT REJECTION CONTROL	n/a	n/a	n/a	
VENTILATION	Air Balance	Air Balance	Air Balance	
OUTDOOR DAMPER CONTROL	Auto	Auto	Auto	
ECONOMIZER TYPE	Diff. Temp (Integrated)	No Economizer	No Economizer	
DESIGN O.A. CFM (MECH-3, COLUMN I)	3772 cfm	46 cfm	46 cfm	
HEATING EQUIPMENT TYPE	None	Electric Res	None	
HEATING EQUIPMENT EFFICIENCY	n/a	3.41 HSPF	n/a	
COOLING EQUIPMENT TYPE	Packaged VAV	Split DX	Split DX	
COOLING EQUIPMENT EFFICIENCY	9.1 EER	n/a	10.6 SEER / 10.3 EER	
MAKE AND MODEL NUMBER	AC-2 (S0HFC25)	Qmark 2516W	MITSUBISHI PU24EK1	
PIPE INSULATION REQUIRED?	Yes	Yes	Yes	
PIPE/DUCT INSULATION PROTECTED?	Yes	Yes	Yes	
HEATING DUCT LOCATION / R-VALUE	Ducts In Attic / 4.2	Baseboard / n/a	Ductless / with Fan / n/a	
COOLING DUCT LOCATION / R-VALUE	Ducts In Attic / 4.2	Ducts In Attic / 4.2	Ductless / n/a	
VERIFIED SEALED DUCTS IN CEILING/ROOF SPACE	No	No	No	

CODE TABLES: Enter code from table below into columns above.

HEAT PUMP THERMOSTAT? / ELECTRIC HEAT? / VAV MINIMUM POSITION CONTROL? / SIMULTANEOUS HEAT / COOL? / HEAT AND COOL SUPPLY RESET? / HIGH EFFICIENCY? / PIPE INSULATION REQUIRED? / PIPE/DUCT INSULATION PROTECTED? / SEALED DUCTS IN CEILING/ROOF SPACE?	Y: Yes N: No	TIME CONTROL: S: Prog. Switch O: Occupancy Sensor M: Manual Timer	SETBACK CTRL.: H: Heating C: Cooling B: Both	ISOLATION ZONES: Enter Number of Isolation Zones.	FAN CONTROL: I: Inlet Vanes P: Variable Pitch V: VFD O: Other C: Curve
		VENTILATION: B: Air Balance C: Outside Air Cert. M: Out. Air Measure D: Demand Control N: Natural	OUTDOOR DAMPER: A: Auto G: Gravity	ECONOMIZER: A: Air W: Water N: Not Required EC: Economizer Control See Section 144(d)3	O.A. CFM: Enter Outdoor Air CFM. Note: This shall be no less than Col. H on MECH-3.

NOTES TO FIELD - For Building Department Use Only

Run Initiation Time: 12/07/03 13:50:39 Run Code: 1070833839

CERTIFICATE OF COMPLIANCE — Performance MECH-1

PROJECT NAME: Diablo Valley College Bookstore | DATE: 12/7/2003

SYSTEM FEATURES

SYSTEM NAME	MECHANICAL SYSTEMS: Hot Water Boiler	DHW Heater	AC-1	NOTE TO FIELD
TIME CONTROL	n/a	n/a	Programmable Switch	
SETBACK CONTROL	n/a	n/a	Heating Required	
ISOLATION ZONES	n/a	n/a	n/a	
HEAT PUMP THERMOSTAT?	n/a	n/a	n/a	
ELECTRIC HEAT?	n/a	n/a	n/a	
FAN CONTROL	n/a	n/a	Constant Volume	
VAV MINIMUM POSITION CONTROL?	n/a	n/a	No	
SIMULTANEOUS HEAT/COOL?	n/a	n/a	No	
HEATING SUPPLY RESET	n/a	n/a	Constant Temp	
COOLING SUPPLY RESET	n/a	n/a	Constant Temp	
HEAT REJECTION CONTROL	n/a	n/a	n/a	
VENTILATION	n/a	n/a	Air Balance	
OUTDOOR DAMPER CONTROL	n/a	n/a	Auto	
ECONOMIZER TYPE	n/a	n/a	Diff. Temp (Integrated)	
DESIGN O.A. CFM (MECH-3, COLUMN I)	n/a	n/a	2624 cfm	
HEATING EQUIPMENT TYPE	Gas Fired	Electric Res	Hot Water	
HEATING EQUIPMENT EFFICIENCY	80%	98%	n/a	
COOLING EQUIPMENT TYPE	n/a	n/a	Split DX	
COOLING EQUIPMENT EFFICIENCY	n/a	n/a	9.1 EER	
MAKE AND MODEL NUMBER	BRYAN D-400-S-***-FDG*	A O SMITH DSE-030	AC-1 (S1HFC30)	
PIPE INSULATION REQUIRED?	Yes	Yes	Yes	
PIPE/DUCT INSULATION PROTECTED?	Yes	Yes	Yes	
HEATING DUCT LOCATION / R-VALUE	n/a / n/a	n/a / n/a	Ducts in Attic / 4.2	
COOLING DUCT LOCATION / R-VALUE	n/a / n/a	n/a / n/a	Ducts in Attic / 4.2	
VERIFIED SEALED DUCTS IN CEILING/ROOF SPACE	n/a	n/a	No	

CODE TABLES: Enter code from table below into columns above.

HEAT PUMP THERMOSTAT? / ELECTRIC HEAT? / VAV MINIMUM POSITION CONTROL? / SIMULTANEOUS HEAT / COOL? / HEAT AND COOL SUPPLY RESET? / HIGH EFFICIENCY? / PIPE INSULATION REQUIRED? / PIPE/DUCT INSULATION PROTECTED? / SEALED DUCTS IN CEILING/ROOF SPACE?	Y: Yes N: No	TIME CONTROL: S: Prog. Switch O: Occupancy Sensor M: Manual Timer	SETBACK CTRL.: H: Heating C: Cooling B: Both	ISOLATION ZONES: Enter Number of Isolation Zones.	FAN CONTROL: I: Inlet Vanes P: Variable Pitch V: VFD O: Other C: Curve
		VENTILATION: B: Air Balance C: Outside Air Cert. M: Out. Air Measure D: Demand Control N: Natural	OUTDOOR DAMPER: A: Auto G: Gravity	ECONOMIZER: A: Air W: Water N: Not Required EC: Economizer Control See Section 144(d)3	O.A. CFM: Enter Outdoor Air CFM. Note: This shall be no less than Col. H on MECH-3.

NOTES TO FIELD - For Building Department Use Only

Run Initiation Time: 12/07/03 13:50:39 Run Code: 1070833839

ENVELOPE COMPLIANCE SUMMARY — Performance ENV-1

PROJECT NAME: Diablo Valley College Bookstore | DATE: 12/7/2003

OPAQUE SURFACES

#	Surface Type	Framing Type	Area	U-Fac.	Act. Azm.	Tilt	Solar Gains Y/N	Form 3 Reference	Location / Comments
41	Door	None	24	0.581	180	90	X	Hollow Metal Door	Main Entry/S Per Zone
42	Wall	Metal	65	0.145	270	90	X	R-19 Metal Stud Wall	Main Entry/S Per Zone
43	Roof	Metal	352	0.050	0	0	X	R-19 Built Up Roof	Main Entry/Core Zone
44	Wall	Metal	516	0.189	0	90	X	R-11 Metal Stud Wall	Main Entry/Core Zone
45	WallBG	Wood	2,100	0.195	0	90	X	6" Concrete Underground Wall, Furred	Basement Zone - 144" deep
46	WallBG	Wood	264	0.195	0	90	X	6" Concrete Underground Wall, Furred	Receiving Office Zone - 144" deep
47	Roof	Metal	144	0.050	0	0	X	R-19 Built Up Roof	Server Zone
48	Wall	Metal	117	0.145	0	90	X	R-19 Metal Stud Wall	Server Zone
49	Wall	Metal	117	0.145	90	90	X	R-19 Metal Stud Wall	Server Zone

FENESTRATION SURFACES

Site Assembled Glazing ☐ Check box if Building is >= 100,000 sqft of CFA and >= 10,000 sqft vertical glazing then NFRC Certification is required. Follow NFRC 100-SB Procedures and submit NFRC Label Certificate Form.

#	Type	Area	U-Fac.	Act. Azm.	SHGC	Glazing Type	Location / Comments

EXTERIOR SHADING

#	Exterior Shade Type	SHGC	Window Hgt. Wd.	Overhang Len. Hgt. LExt.RExt.	Left Fin Dist. Len. Hgt.	Right Fin Dist. Len. Hgt.

Run Initiation Time: 12/07/03 13:50:39 Run Code: 1070833839

ENVELOPE COMPLIANCE SUMMARY — Performance ENV-1

PROJECT NAME: Diablo Valley College Bookstore | DATE: 12/7/2003

OPAQUE SURFACES

#	Surface Type	Framing Type	Area	U-Fac.	Act. Azm.	Tilt	Solar Gains Y/N	Form 3 Reference	Location / Comments
21	Roof	Metal	507	0.050	0	0	X	R-19 Built Up Roof	Open Office/SPer Zone
22	Wall	Metal	97	0.145	90	90	X	R-19 Metal Stud Wall	Open Office/SPer Zone
23	Wall	Metal	318	0.145	180	90	X	R-19 Metal Stud Wall	Open Office/SPer Zone
24	Wall	Metal	65	0.145	270	90	X	R-19 Metal Stud Wall	Open Office/SPer Zone
25	Roof	Metal	341	0.050	0	0	X	R-19 Built Up Roof	Open Office/Core Zone
26	Roof	Metal	759	0.050	0	0	X	R-19 Built Up Roof	Open Office/Core Zone
27	Roof	Metal	322	0.050	0	0	X	R-19 Built Up Roof	Main Entry/N Per Zone
28	Wall	Metal	1	0.438	0	90	X	Aluminum Panel Wall	Main Entry/N Per Zone
29	Wall	Metal	90	0.145	225	90	X	R-19 Metal Stud Wall	Main Entry/N Per Zone
30	Wall	Metal	117	0.145	0	90	X	R-19 Metal Stud Wall	Main Entry/N Per Zone
31	Wall	Metal	124	0.145	90	90	X	R-19 Metal Stud Wall	Main Entry/N Per Zone
32	Roof	Metal	180	0.050	0	0	X	R-19 Built Up Roof	Main Entry/E Per Zone
33	Wall	Metal	1	0.438	90	90	X	Aluminum Panel Wall	Main Entry/E Per Zone
34	Wall	Metal	520	0.145	90	90	X	R-19 Metal Stud Wall	Main Entry/E Per Zone
35	Wall	Metal	90	0.145	225	90	X	R-19 Metal Stud Wall	Main Entry/E Per Zone
36	Wall	Metal	255	0.145	90	90	X	R-19 Metal Stud Wall	Main Entry/E Per Zone
37	Wall	Metal	39	0.145	180	90	X	R-19 Metal Stud Wall	Main Entry/E Per Zone
38	Wall	Metal	130	0.145	0	90	X	R-19 Metal Stud Wall	Main Entry/E Per Zone
39	Wall	Metal	130	0.145	90	90	X	R-19 Metal Stud Wall	Main Entry/S Per Zone
40	Wall	Metal	406	0.145	180	90	X	R-19 Metal Stud Wall	Main Entry/S Per Zone

FENESTRATION SURFACES

Site Assembled Glazing ☐ Check box if Building is >= 100,000 sqft of CFA and >= 10,000 sqft vertical glazing then NFRC Certification is required. Follow NFRC 100-SB Procedures and submit NFRC Label Certificate Form.

#	Type	Area	U-Fac.	Act. Azm.	SHGC	Glazing Type	Location / Comments

EXTERIOR SHADING

#	Exterior Shade Type	SHGC	Window Hgt. Wd.	Overhang Len. Hgt. LExt.RExt.	Left Fin Dist. Len. Hgt.	Right Fin Dist. Len. Hgt.

Run Initiation Time: 12/07/03 13:50:39 Run Code: 1070833839

MECHANICAL DESIGN STUDIO inc
1777 Oakland Blvd. Suite 210
Walnut Creek, California 94596
tel 925. 210-0100
fax 925. 210-0144
www.mds-sf.com
PROJECT # 23087.00

REGISTERED PROFESSIONAL ENGINEER — ROBERT ANDREE — No. M 26561 — Exp. 9/30/06 — MECHANICAL — STATE OF CALIFORNIA

DIABLO VALLEY COLLEGE

DIABLO VALLEY COLLEGE NEW BOOKSTORE

321 GOLF CLUB RD.
PLEASANT HILL, CALIFORNIA

DATE: 23 JULY, 2004

BID SET

SHEET TITLE:
TITLE 24

IDENTIFICATION STAMP
DIVISION OF THE STATE ARCHITECT
105925
APPL 01
AC LE FLS EO SS A1
DATE: 5-12-04 JUL 26 2004

BLDG. ID: 098
ID CODE: 312098-109.01-A

DRAWN BY: JLW/LK
CHECKED BY: DA
JOB NO: 0307

SHEET M7.1

07/19/04 10:30:14 AM F:\C_23000\23087.00 DVC NEW BOOKSTORE\DRAWINGS\23087M71.DWG jeff

MECHANICAL MANDATORY MEASURES — Part 2 of 2 — MECH-MM

PROJECT NAME: Diablo Valley College Bookstore | DATE: 12/7/2003

		Description	Designer	Enforcement
		Ventilation		
X	121(e)	Controls shall be provided to allow outside air dampers or devices to be operated at the ventilation rates as specified on these plans.		
X	122(f)	Gravity or automatic dampers interlocked and closed on fan shutdown shall be provided on the outside air intakes and discharges of all space conditioning and exhaust systems.		
X	122(f)	All gravity ventilating systems shall be provided with automatic or readily accessible manually operated dampers in all openings to the outside, except for combustion air openings.		
X	121(f)1	Air Balancing: The system shall be balanced in accordance with the National Environmental Balancing Bureau (NEBB) Procedural Standards (1983), or Associated Air Balance Council (AABC) National Standards (1989); or		
☐	121(f)2	Outside Air Certification: The system shall provide the minimum outside air as shown on the mechanical drawings, and shall be measured and certified by the installing licensed C-20 mechanical contractor and certified by (1) the design mechanical engineer, (2) the installing licenced C-20 mechanical contractor, or (3) the person with overall responsibility for the design of the ventilation system; or		
☐	121(f)3	Outside Air Measurement: The system shall be equipped with a calibrated local or remote device capable of measuring the quantity of outside air on a continuous basis and displaying that quantity on a readily accessible display divice; or		
☐	121(f)4	Another method approved by the Commission.		
		Service Water Heating Systems		
X	113(b)2	If a circulating hot water system is installed, it shall have a control capable of automatically turning off the circulating pump(s) when hot water is not required.		
X	113(b)3B	Lavatories in restrooms of public facilities shall be equipped with controls to limit the outlet temperature to 110 degrees F.		
X	113(b)3C	Lavatories in restrooms of public facilities shall be equipped with one of the following: Outlet devices that limit the flow of hot water to a maximum of 0.5 gallons per minute. Foot actuated control valves, and outlet devices that limit the flow of hot water to a maximum of 0.75 gallons per minute. Proximity sensor actuated control valves, and outlet devices that limit the flow of hot water to a maximum of 0.75 gallons per minute. Self-closing valves, and outlet devices that limit the flow of hot water to a maximum of 2.5 gallons per minute, and 0.25 gallons/cycle (circulating system). Self-closing valves, and outlet devices that limit the flow of hot water to a maximum of 2.5 gallons per minute, and 0.50 gallons/cycle (non-circulating system). Self-closing valves, and outlet devices that limit the flow of hot water to a maximum of 2.5 gallons per minute, and 0.75 gallons/cycle (foot switches and proximity sensor controls).		

EnergyPro 3.1 By EnergySoft User Number: 0000 Job Number: 03300 Page: 16 of 16

MECHANICAL MANDATORY MEASURES — Part 1 of 2 — MECH-MM

PROJECT NAME: Diablo Valley College Bookstore | DATE: 12/7/2003

		DESCRIPTION	Designer	Enforcement
		Equipment and Systems Efficiencies		
X	111	Any appliance for which there is a California standard established in the Appliance Efficiency Regulations will comply with the applicable standard.		
X	115(a)	Fan type central furnaces shall not have a pilot light.		
X	123	Piping, except that conveying fluids at temperatures between 60 and 105 degrees Fahrenheit, or within HVAC equipment, shall be insulated in accordance with Standards Section 123.		
X	124	Air handling duct systems shall be installed and insulated in compliance with Sections 601, 603 and 604 of the Uniform Mechanical Code.		
		Controls		
	122(e)	Each space conditioning system shall be installed with one of the following:		
X	122(e)1A	Each space conditioning system serving building types such as offices and manufacturing facilities (and all others not explicitly exempt from the requirements of Section 112 (d)) shall be installed with an automatic time switch with an accessible manual override that allows operation of the system during off-hours for up to 4 hours. The time switch shall be capable of programming different schedules for weekdays and weekends and have program backup capabilities that prevent the loss of the device's program and time setting for at least 10 hours if power is interrupted; or		
☐	122(e)1B	An occupancy sensor to control the operating period of the system; or		
☐	122(e)1C	A 4-hour timer that can be manually operated to control the operating period of the system.		
X	122(e)2	Each space conditioning system shall be installed with controls that temporarily restart and temporarily operate the system as required to maintain a setback heating and/or a setup cooling thermostat setpoint.		
☐	122(g)	Each space conditioning system serving multiple zones with a combined conditioned floor area more than 25,000 square feet shall be provided with isolation zones. Each zone: shall not exceed 25,000 square feet; shall be provided with isolation devices, such as valves or dampers, that allow the supply of heating or cooling to be setback or shut off independently of other isolation areas; and shall be controlled by a time control device as described above.		
X	122(abb)	Each space conditioning system shall be controlled by an individual thermostat that responds to temperature within the zone. Where used to control heating, the control shall be adjustable down to 55 degrees F or lower. For cooling, the control shall be adjustable up to 85 degrees F or higher. Where used for both heating and cooling, the control shall be capable of providing a deadband of at least 5 degrees F within which the supply of heating and cooling is shut off or reduced to a minimum.		
X	122(c)	Thermostats shall have numeric setpoints in degrees Fahrenheit (F) and adjustable setpoint stops accessible only to authorized personnel.		
☐	112(b)	Heat pumps shall be installed with controls to prevent electric resistance supplementary heater operation when the heating load can be met by the heat pump alone.		

EnergyPro 3.1 By EnergySoft User Number: 0000 Job Number: 03300 Page: 15 of 16

ENVELOPE MANDATORY MEASURES — ENV-MM

PROJECT NAME: Diablo Valley College Bookstore | DATE: 12/7/2003

		DESCRIPTION	Designer	Enforcement
X	118(a)	Installed Insulating Material shall have been certified by the manufacturer to comply with the California Quality Standards for insulating material, Title 20, Chapter 4, Article 3.		
X	118(c)	All Insulating Materials shall be installed in compliance with the flame spread rating and smoke density requirements of Sections 2602 and 707 of Title 24, Part 2.		
X	117(a)	All Exterior Joints and openings in the building that are observable sources of air leakage shall be caulked, gasketed, weatherstripped or otherwise sealed.		
X	116(b)	Site Constructed Doors, Windows and Skylights shall be caulked between the unit and the building, and shall be weatherstripped (except for unframed glass doors and fire doors).		
X	116(a)1	Manufactured Doors and Windows installed shall have air infiltration rates not exceeding those shown in Table Number 1-E. of the Standards. Manufactured fenestration products must be labeled for U-value according to NFRC procedures.		
X	118(c)	Demising Walls in Nonresidential Buildings: The opaque portions of framed demising walls in nonresidential buildings shall have insulation with an installed R-value of no less than R-11 between framing members.		

EnergyPro 3.1 By EnergySoft User Number: 0000 Job Number: 03300 Page: 14 of 16

MECHANICAL DESIGN STUDIO *inc*
1777 Oakland Blvd. Suite 210
Walnut Creek, California 94596
tel 925. 210-0100
fax 925. 210-0144
www.mds-sf.com
PROJECT # 23087.00

REGISTERED PROFESSIONAL ENGINEER DOREL ANGEL No. M 26561 EXP. 9/30/06 MECHANICAL STATE OF CALIFORNIA

DIABLO VALLEY COLLEGE

DIABLO VALLEY COLLEGE NEW BOOKSTORE

321 GOLF CLUB RD.
PLEASANT HILL, CALIFORNIA

DATE: 23 JULY, 2004

BID SET

SHEET TITLE:
TITLE 24

IDENTIFICATION STAMP
DIVISION OF THE STATE ARCHITECT
105925
APPL 01
AC LE FLS EO SS M
DATE: 5-12-04 JUL 26 2004

BLDG. ID: 098
ID CODE: 312098-109.01-A

DRAWN BY: JLW/LK
CHECKED BY: DA
JOB NO: 0307

SHEET
M7.2

07/19/04 10:30:23 AM F:\C_23000\23087.00 DVC NEW BOOKSTORE\DRAWINGS\23087M72.DWG jeff

ABBREVIATIONS

+	POSITIVE VALUE
–	NEGATIVE VALUE
+/–	PLUS OR MINUS
ø	NOMINAL DIAMETER, INCHES
◫	SQUARE FEET
℄	CENTER LINE OF OBJECT
A	COMPRESSED AIR
AD	ACCESS DOOR
ADJ	ADJUSTABLE
ADV	AUTOMATIC DRAIN VALVE
AFC	ABOVE FURRED CEILING
AFF	ABOVE FINISHED FLOOR
AIR	COMPRESSED AIR
AL	ALUMINUM
AMP	AMPERE
AS	AIR SEPARATOR
AS	AUTOMATIC SPRINKLER
AV	ACID VENT
AVTR	ACID VENT THROUGH ROOF
AW	ACID WASTE
AWG	AMERICAN WIRE GAUGE
BFC	BELOW FURRED CEILING
BFF	BELOW FINISHED FLOOR
BFP	BACKFLOW PREVENTER
BG	BELOW GRADE
BHP	BRAKE HORSEPOWER
BT	BATHTUB
BV	BALANCE VALVE
BV	BUTTERFLY VALVE
BWV	BACK WATER VALVE
C	AIR COMPRESSOR
CA	COMPRESSED AIR
CAP	PIPE END CAP
CB	CATCH BASIN
CD	CONDENSATE DRAIN
CDA	CLEAN DRY COMPRESSED AIR
CFH	CUBIC FEET PER HOUR
CFM	CUBIC FEET PER MINUTE
CI	CAST IRON
CL	COLUMN LINE
CLG	CEILING
CO2	CARBON DIOXIDE
CO	CLEAN OUT
CP	CONCRETE PIPE
CR	CONDENSATE RETURN
CV	CHECK VALVE
CV	CONTROL VALVE
CV	HYDRAULIC FLOW COEFFICIENT
CW	DOMESTIC COLD WATER
DIA	NOMINAL DIAMETER
DN	DOWN
DPG	DIFFERENTIAL PRESSURE GAUGE
DSP	DRY STANDPIPE
DIW	DEIONIZED WATER
DW	DISTILLED WATER
(E)	EXISTING
EFF	EFFICIENCY
EW	EMERGENCY EYE WASH
ESH	EMERGENCY SHOWER
EWC	ELECTRIC WATER COOLER
EWT	ENTER WATER TEMPERATURE, °F
ESEW	EMERGENCY SHOWER AND EYEWASH
FC	FLEXIBLE CONNECTION
FCO	FLOOR CLEANOUT
FD	FLOOR DRAIN
FF	FINISHED FLOOR
FL	FIRE LINE
FLA	FULL LOAD AMPS
FOR	FUEL OIL RETURN
FOS	FUEL OIL SUPPLY
FPM	FEET PER MINUTE
FPS	FEET PER SECOND
FS	FLOOR SINK
FU	PLUMBING FIXTURE UNIT
GA	GAUGE
GAL	U.S. GALLONS
G	NATURAL GAS
GCO	GROUND CLEAN OUT
GLV	GLOBE VALVE
GPH	GALLONS PER HOUR
GPM	GALLONS PER MINUTE
GI	GREASE INTERCEPTOR
GV	GATE VALVE
HB	HOSE BIBB
HCV	HOUSE CLEANING VACUUM
HE	GASEOUS HELIUM
HP	HORSEPOWER
HPA	HIGH PRESSURE COMPRESSED AIR
HPG	HIGH PRESSURE NATURAL GAS
HPS	HIGH PRESSURE STEAM
HR	HOUR
HW	DOMESTIC HOT WATER
ID	NOMINAL INSIDE DIAMETER, INCHES
IE	INVERT ELEVATION, FEET ABOVE REFERENCE
IW	INDIRECT WASTE
KW	KILOWATT
KWH	KILOWATT HOURS
L	NOMINAL LENGTH, INCHES
LAV	LAVATORY
LN	LIQUID NITROGEN
LRA	LOCKED ROTOR AMPS
LV	LAB VENT
LVTR	LAB VENT THROUGH ROOF
LW	LAB WASTE
LWT	LEAVING WATER TEMPERATURE, °F
MAV	MANUAL AIR VENT
MAX	MAXIMUM
MCA	MINIMUM CIRCUIT AMPACITY
MFR	MANUFACTURER
MH	MANHOLE
MHP	MOTOR HORSEPOWER
MIN	MINIMUM
MV	MIXING VALVE
(N)	NEW
N	GASEOUS NITROGEN
NC	NORMALLY CLOSED
NIC	NOT IN CONTRACT
NO	NORMALLY OPEN
NTS	NOT TO SCALE
NPW	NON–POTABLE WATER
O2	GASEOUS OXYGEN
OC	ON CENTER
OD	NOMINAL OUTSIDE DIAMETER, INCHES
OD	OVERFLOW DRAIN
P	PUMP
PCW	PROCESS COOLING WATER
PCWR	PROCESS COOLING WATER RETURN
PCWS	PROCESS COOLING WATER SUPPLY
PG	PRESSURE GAUGE
POC	POINT OF CONNECTION
PRV	PRESSURE REGULATING VALVE
PSIG	POUNDS PER SQUARE INCH GAUGE
PV	PROCESS VACUUM
PVC	POLYVINYL CHLORIDE
R	RISE
RCP	REINFORCED CONCRETE PIPE
RD	ROOF DRAIN
DI	ROUGH IN
RIC	ROUGH IN AND CONNECT
RLA	RUNNING LOAD AMP
RO	REVERSE OSMOSIS
RPM	REVOLUTIONS PER MINUTE
RWL	RAIN WATER LEADER
S	SANITARY SEWER
S	SINK
SCD	SEE CIVIL DRAWINGS
SCFM	STANDARD CUBIC FEET PER MINUTE
SD	STORM DRAIN (OUTSIDE THE BUILDING)
SF	SQUARE FOOT
SG	SIGHT GLASS
SH	SHOWER
SI	SPRING ISOLATOR
SIM	SIMILAR
SOV	SHUT–OFF VALVE
SRV	SAFETY RELIEF VALVE
SS	SANITARY SEWER OUTSIDE THE BUILDING)
ST	STORAGE TANK
TDH	TOTAL DYNAMIC HEAD, FTWG
THW	TEMPERED HOT WATER
THWR	TEMPERED HOT WATER RETURN
THWS	TEMPERED HOT WATER SUPPLY
TP	TRAP PRIMER
TYP	TYPICAL
UON	UNLESS OTHERWISE NOTED
UP	UP
UR	URINAL
US	UNDERSLAB
V	VENT
VAC	VACUUM
VAC	VOLTS OF AC CURRENT
VCP	VITRIFIED CLAY PIPE
VI	VIBRATION ISOLATOR
VIF	VERIFY IN FIELD
VP	VACUUM PUMP
VR	VENT RISER
VTR	VENT THROUGH ROOF
W	WASTE
WC	WATER CLOSET
WCO	WALL CLEANOUT
WF	WASH FOUNTAIN
WF	WATER FILTER
WFS	WATER FLOW SWITCH
WH	WATER HEATER
WSP	WET STANDPIPE
WT	APPROXIMATE WEIGHT, LBS

PIPE LEGEND

SYMBOL	DESCRIPTION
	SUPPLY OR RETURN PIPE BELOW FLOOR
	SUPPLY OR RETURN PIPE ABOVE FLOOR
	EXISTING PIPE ABOVE FLOOR
	EXISTING PIPE TO BE REMOVED
	SANITARY SOIL OR WASTE PIPING
	SANITARY SOIL OR WASTE PIPING BELOW SLAB
	DOMESTIC COLD WATER PIPING
	DOMESTIC HOT WATER PIPING
	VENT OR RELIEF PIPE ABOVE FLOOR

VALVES AND ACTUATORS

	BALANCING VALVE (BALL OR BUTTERFLY)
	GATE VALVE–SHUT–OFF VALVE (USE BALL VALVE, UON)
	CIRCUIT BALANCE VALVE
M	3–WAY AUTOMATIC CONROL VALVE WITH PNEUMATIC ACTUATOR
M	2–WAY AUTOMATIC CONROL VALVE WITH PNEUMATIC ACTUATOR
S	SOLENOID VALVE 2–WAY SHOWN
	GAS COCK
	PLUG VALVE WITH LEVEL HANDLE
	CHECK VALVE
	PRESSURE REGULATING VALVE
	SAFETY RELIEF VALVE OR TEMPERATURE & PRESSURE RELIFE VALVE
	GAGE COCK (NETTLE VALVE)
	GLOBE VALVE
	DIAPHRAGM VALVE
	SPECIAL VALVE, USE INDICATED

PRESSURE PIPE FITTING

	90° ELBOW
	45° ELBOW
	TEE
	CROSS
	TWO PIPES CROSSING NO CONNECTION
	ELBOW, OUTLET UP
	ELBOW, OUTLET DOWN
	TEE, OUTLET UP
	TEE, OUTLET DOWN
	TEE DOWN WITH RISER CONNECTION TO CROSSPIPE
	PIPE CAP
	UNION, SCREWED OR SOLDERED
	FLANGED CONNECTION
	REDUCER CONCENTRIC

PIPE SPECIALTIES

	ANCHOR
	ALIGNEMENT GUIDE
	EXPANSION JOINT
	FLEXIBLE CONNECTION
AAV	AUTOMATIC AIR VENT W/SOV
	WYE STRAINER W/BLOW DOWN VALVE AND HOSE CONN.
MAV	MANUAL AIR VENT
TH	THERMOMETER (USE DIAL TYPE)
PG	PRESSURE GAUGE W/GAGE COCK
TF	TEST FITTING (PETE'S PLUG)
	TERMAL WELL
	ORIFICE FLOW METER
	SLOPE DOWN
	HOSE BIBB
	FLOOR CLEANOUT SQUARE AND ROUND
	WALL CLEANOUT
	FLOOR DRAIN SQUARE AND ROUND
	FLOOR SINK

DRAWING CONVENTIONS

DETAIL INDICATOR

1 — DETAIL NUMBER
P3.1 — SHEET NUMBER

EQUIPMENT DESIGNATOR

ACU — EQUIPMENT CODE
9 — ITEM NUMBER

SECTION DESIGNATOR

3 — DETAIL NUMBER
P3.1 — DRAWING NUMBER

IF USED TAIL INDICATES LIMIT OF SECTION

REVISION DESIGNATOR

REVISED AREA
REVISION NUMBER

DRAWING INDEX

P0.1	LEGEND SYMBOLS AND ABBREVIATIONS
P0.2	SCHEDULES AND GENERAL NOTES
P1.0	SITE PLAN – PLUMBING
P2.0	BASEMENT (LOOR) PLAN – PLUMBING
P2.1	FIRST FLOOR PLAN – PLUMBING
P2.2	2ND FLOOR PLAN – PLUMBING
P2.3	ROOF PLAN – PLUMBING
P3.1	DETAILS

MECHANICAL DESIGN STUDIO *inc*
1777 Oakland Blvd. Suite 210
Walnut Creek, California 94596
tel 925. 210–0100
fax 925. 210–0144
www.mds–sf.com
PROJECT # 23087.00

REGISTERED PROFESSIONAL ENGINEER DUREL ANGEL No. M 26561 EXP. 9/30/06 MECHANICAL STATE OF CALIFORNIA

DIABLO VALLEY COLLEGE

DIABLO VALLEY COLLEGE NEW BOOKSTORE

321 GOLF CLUB RD.
PLEASANT HILL, CALIFORNIA

DATE: 23 JULY, 2004

0 REVISIONS– 23 JULY, 2004

BID SET

SHEET TITLE:

LEGEND SYMBOLS AND ABBREVIATIONS

IDENTIFICATION STAMP
DIVISION OF THE STATE ARCHITECT
105925
APPL 01
AC LE FLS EO SS AI
DATE: 5-12-04 JUL 2 6 2004

BLDG. ID: 098
ID CODE: 312098–109.01–A

DRAWN BY: JLW/LK
CHECKED BY: DA
JOB NO: 0307

SHEET P0.1

07/19/04 10:32:08 AM F:\C_23000\23087.00 DVC NEW BOOKSTORE\DRAWINGS\23087P01.DWG jeff

GENERAL NOTES

1. THE INTENT OF THESE DRAWINGS AND SPECIFICATIONS IS THAT THE CONSTRUCTION IS TO BE IN ACCORDANCE WITH TITLE 24, CALIFORNIA CODE OF REGULATION.
2. THE DRAWINGS ARE DIAGRAMMATIC. THIS CONTRACTOR SHALL BE RESPONSIBLE FOR FIELD COORDINATION WITH OTHER TRADES. BEFORE SUBMITTING THE BID, CONTRACTOR CONTRACTOR SHALL REVIEW THE ARCHITECTURAL, STRUCTURAL AND ELECTRICAL DRAWINGS AND DETERMINE ALL REQUIREMENTS TO PROVIDE A PLUMBING AND FIRE PROTECTION SYSTEM AS DESCRIBED ON THE DRAWINGS.
3. BEFORE ANY TRENCHING, DETERMINE THE EXACT ROUTING AND INVERT ELEVATIONS OF UNDERGROUND UTILITIES BY REVIEWING CIVIL DRAWINGS AND PERFORMING FIELD SURVEYS.
4. REFER TO ARCHITECTURAL INTERIOR DETAILS, FLOOR PLANS AND REFLECTED CEILING PLANS FOR EXTENT AND ELEVATIONS OF CEILINGS, SHAFTS, SOFFITS, ETC.
5. NO PRODUCT WILL BE ACCEPTED ON THE JOB SITE WITHOUT PRIOR APPROVAL BY THE ARCHITECT. THE CONTRACTOR SHALL SUBMIT SHOP DRAWINGS AND CATALOG SHEETS OF ALL PLUMBING EQUIPMENT AND MATERIALS THAT THE CONTRACTOR INTENDS TO USE.
6. INSULATE ALL DOMESTIC HOT WATER SUPPLY PIPING PER SPECIFICATION SECTION 15000. INSULATION SHALL BE NON-COMBUSTIBLE MATERIAL MEETING CODE REQUIREMENTS AND FIRE AND SMOKE HAZARD RATINGS AS TESTED BY PROCEDURE ASTM E-84, NFPA 225 AND UL 723 NOT EXCEEDING FLAME SPREAD 25 AND SMOKE DEVELOPED 50, ADHESIVES, MASTICS, CEMENTS, ETC. SHALL NOT EXCEED THE SAME COMPONENT RATINGS.
7. ALL PIPES AND EQUIPMENT SHALL BE LABELED OR TAGGED CONFORMING TO PROJECT SPECIFICATIONS.
8. ALL FLOOR CLEANOUTS TO BE INSTALLED WITH 18" MIN. CLEARANCE IN FRONT OF THE CLEANOUT.
9. THE ENTIRE PROJECT SHALL BE SPRINKLERED IN ACCORDANCE WITH NFPA 13 LATEST EDITION. SPRINKLERS IN ALL AREAS WITH CEILINGS SHALL BE CONCEALED TYPE. SPRINKLERS IN ACOUSTICAL TILE SHALL BE WITHIN 1/2" OF CENTER OF TILE.
10. ALL PIPING PENETRATING CONCRETE FOOTINGS SHALL BE PROVIDED WITH SLEEVES. REFER ALSO TO STRUCTURAL DRAWINGS FOR PIPE PENETRATION DETAILS.
11. DESIGN AND INSTALLATION OF THE FIRE SPRINKLER SYSTEM SHALL BE IN ACCORDANCE WITH NFPA 13 AND ANY ADDITIONAL LOCAL AMENDMENTS ADOPTED BY LOCAL FIRE ORDINANCE.

EQUIPMENT ANCHORAGE NOTES

ALL MECHANICAL EQUIPMENT, DUCTWORK AND PIPES SHALL BE BRACED AND ANCHORED TO RESIST SEISMIC FORCES PRESCRIBED IN CBC 2001, SECTION 1632A AND ASSOCIATED TABLES. SEE ANCHORAGE DETAILS ON DRAWINGS FOR THE SPECIFIC SPECIFIED EQUIPMENT. MECHANICAL CONTRACTOR IS RESPONSIBLE FOR PROVIDING ALL PERTINENT DETAILS AND ASSOCIATED CALCULATIONS FOR ALL SUBSTITUTED EQUIPMENT TO COMPLETELY ADDRESS SEISMIC RESTRAINT REQUIREMENTS FOR THE SPECIFIC PROJECT LOCATION – SUBMIT AS PART OF EQUIPMENT AND MATERIALS SUBMITTAL FOR REVIEW AND APPROVAL PRIOR TO INSTALLATION. ALL SUCH DETAILS AND CALCULATIONS SHALL BE STAMPED AND SIGNED BY A PROFESSIONAL STRUCTURAL ENGINEER REGISTERED IN THE STATE OF CALIFORNIA. VIBRATION ISOLATION MANUFACTURER'S DETAILS AND CALCULATIONS WILL BE ACCEPTABLE FOR VIBRATION ISOLATED EQUIPMENT AND PIPING. PRE-ENGINEERED/ DSA OR ICBO PREAPPROVED DETAILS FOR RIGID DUCTWORK AND PIPING SUPPORTS AND BRACING FROM SMACNA, ISAT (INTERNATIONAL SEISMIC APPLICATION TECHNOLOGY) OR ANY HANGER MANUFACTURER SHALL ONLY BE USED IF IT IS DEMONSTRATED THAT SUCH SUPPORTS AND BRACING MEET THE SPECIFIC SEISMIC REQUIREMENTS OF THIS PROJECT. SEE SEISMIC DESIGN CRITERIA ON STRUCTURAL DRAWINGS FOR PROJECT SPECIFIC SEISMIC COEFFICIENTS TO BE USED TO DETERMINE THE ULTIMATE LOADS FROM EQUATIONS 32A-1, 32A-2 AND 32A-3. THESE LOADS CAN THEN BE DIVIDED BY 1.4 TO OBTAIN THE ALLOWABLE LOADS WHICH TEH RESTRAINTS MUST BE ABLE TO WITHSTAND.

PLUMBING FIXTURES AND CONNECTION SCHEDULE

CODE	DESCRIPTION	WASTE	TRAP	VENT	CW	HW	MANUFACTURER AND MODEL NO.
WC-1	WATER CLOSET	4"	INTEGRAL	2"	1-1/2"	–	AMERICAN STANDARD 2257.103 "AFWALL" WALL MOUNTED ELONGATED, SENSOR OPERATED BATTERY POWERED, FLUSH VALVE SLOAN ROYAL 811-LH-MC, 1.6 GPF, SEAT OLSONITE # 95.
WC-2	WATER CLOSET (ADA COMPLIANT)	4"	INTEGRAL	2"	1-1/2"	–	AMERICAN STANDARD 2257.103 "AFWALL" WALL MOUNTED ELONGATED, SENSOR OPERATED BATTERY POWERED FLUSH VALVE SLOAN ROYAL 811-LH-MC, 1.6 GPF, SEAT OLSONITE # 95, INSTALLED AT HANDICAPPED HEIGHT. [1]
LAV-1	LAVATORY (ADA COMPLIANT)	2"	1-1/4"X1-1/4"	1-1/2"	1/2"	1/2"	AMERICAN STANDARD 0496.221 "OVALYN" UNDERCOUNTER, SENSOR TYPE FAUCET "SLOAN" EBF-650 WITH THERMOSTATIC MIXING VALVE, BATTERY POWERED, GRID DRAIN. [2]
LAV-2	LAVATORY (ADA COMPLIANT)	2"	1-1/4"X1-1/4"	1-1/2"	1/2"	1/2"	AMERICAN STANDARD "LUCERNE" 0355.012, WALL HUNG, FAUCET SLOAN EBF-650, SENSOR OPERATED, BATTERY POWERED, WITH THERMOSTATIC MIXING VALVE, GRID DRAIN. [2]
UR-1	URINAL (ADA COMPLIANT)	2"	INTEGRAL	2"	1"	–	AMERICAN STANDARD 6501.010 "WASHBROOK", SENSOR OPERATED FLUSH VALVE SLOAN ROYAL 8186-LH-MC 1.0 GPF. INSTALLED AT HANDICAPPED ACCESSIBLE HEIGHT
SS-1	SERVICE SINK	3"	3"	2"	3/4"	3/4"	FLORESTONE MOP RECEPTOR, MODEL 82, TERRAZO, 24"x24"x6", 0 FAUCET LK-401, SPOUT WITH VACUUM BREAKER, PAIL HOOK, WALL BRACE, LK-402 HOSE, LK-403 MOP HOLDER, LK-404 HOSE HANGER.
HB-1	HOSE BIBB	–	–	–	3/4"	–	ZURN Z-1350 NARROW WALL HYDRANT STAINLESS STEEL BOX, NON-REMOVABLE VACUUM BREAKER.
HB-2	HOSE BIBB	–	–	–	3/4"	–	CHICAGO FAUCET 7T, ROUGH BRASS FINISH, NON-REMOVABLE VACUUM BREAKER.
DF-1	ELECTRIC WATER COOLER (ADA COMPLIANT)	2"	1-1/4"X1-1/4"	1-1/2"	3/4"	–	HAWS MODEL H1011.8 , DUAL HEIGHT, 115V, 60Hz.
SK-1	SINK (ADA COMPLIANT)	2"	1-1/2" X 1-1/2"	1-1/2"	3/4"	3/4"	ELKAY LRAD-2219, STAINLESS STEEL COUNTERTOP, FAUCET ELKAY LK232-S-BH-4, 4" BLADE HANDLES, GARBAGE DISPOSER MODEL 555SS, 3/4 HP, 115V. PROVIDE VALVED WATER CONNECTION FOR ICE MAKER.
SK-2	SINK (ADA COMPLIANT)	2"	1-1/2" X 1-1/2"	1-1/2"	3/4"	3/4"	ELKAY LRAD-2219, STAINLESS STEEL COUNTERTOP, FAUCET ELKAY LK232-S-BH-4, 4" BLADE HANDLES, LKAD-35 DRAIN.
SK-3	SINK (DUMP SINK)	2" (IW)	–	–	3/4"	3/4"	ADVANCE TABCO DI-I-10, STAINLESS STEEL, 10" DEEP, COUNTERTOP, FAUCET LK 232-S-BH-4, 4" BLADE HANDLES, GARBAGE DISPOSER IN SINK-ERATOR MODEL 555 SS, 3/4 HP, 115V.
SK-4	THREE COMPARTMENT SINK	2" (IW)	–	–	3/4"	3/4"	ADVANCE TABCO "REGALINE" MODEL 9-23-60-18RL, STAINLESS STEEL, FAUCETS (2) CHICAGO 445, DJ13 CP.

[1] LOCATE FLUSH VALVE ON WIDE SIDE OF STALL.

[2] PROVIDE PROTECTIVE COVERS FOR TRAP AND SUPPLIES AS SPECIFIED.

DRAINS AND CLEANOUT SCHEDULE

CODE	FLOOR FINISH	ZURN FIG. NUMBER	CONN.	TOP GR. MATERIAL	GRATE SIZE	REMARKS
FD-1	[1]	Z-415	2"	NICKEL BRONZE	6"ø	WITH TRAP PRIMER CONNECTION, STRAINER TYPE "B"
FD-2	[1]	Z-415	2"	NICKEL BRONZE	6"ø	WITH TRAP PRIMER CONNECTION, STRAINER TYPE "H"
FD-3	–	Z-1189	4"	DURA-COATED HEAVY DUTY CAST IRON	12" X 24"	OIL-SEDIMENT INTERCEPTOR
FS-1	[1]	Z-1901	2"/3"	NICKEL BRONZE	12" X 12"	WITH TRAP PRIMER CONNECTION, COORDINATE FLOOR SINK FLANGE WITH FLOOR FINISH.
RD-1	–	Z-121	3"/4"	DURA-COATED CAST IRON DOME	12"ø	
OD-1	–	Z-121	3"/4"	DURA-COATED W/ CAST IRON DOME	12"ø	WITH 2" HIGH DAM
WCO	–	Z-1468	2"/4"	STAINLESS STEEL COVER	5"/7"	NICKEL BRONZE PLUG
FCO	[1]	Z-1400	4"	NICKEL BRONZE	6"ø	REFER TO FLOOR PLAN FOR CLEANOUT PLATE SPECIAL REQUIREMENTS.
GCO	–	Z-1474	4"	DURESIST COVER	9"ø	WITH INTERNAL CLEANOUT
TD-1	–	Z-664	4"	DURA-COATED CAST IRON	6" X 12"	MODULAR TRENCH DRAIN, EXTRA HEAVY-DUTY GRATE

NOTE(S): [1] REFER TO ARCHITECTURAL DRAWINGS FOR FLOOR FINISHES.

PLUMBING EQUIPMENT SCHEDULE

CODE	DESCRIPTION	REMARKS	REMARKS
EWH 1	ELECTRIC WATER HEATER A.O. SMITH DSE-40, 9KW, 208V, 3PH., 40 GALLON TANK. 0	LOCATION: ROOM 220 OPER. WEIGHT: 550 LBS. 0	
EWH 2	ELECTRIC WATER HEATER, A.O. SMITH DSE-10, 3KW 208V, 1PH, 10 GALLON TANK 0	LOCATION: ROOM 104 OPER. WEIGHT: 200 LBS. 0	
SE 1,2	WEIL SUBMERSIBLE SEWAGE EJECTOR, DUPLEX, MODEL 2426, 40 GPM AT 24 FT OF HEAD, 1 HP, 208V, 1PH.	LOCATION: BOILER ROOM OPER. WEIGHT: N/A	

MECHANICAL DESIGN STUDIO *inc*
1777 Oakland Blvd. Suite 210
Walnut Creek, California 94596
tel 925. 210-0100
fax 925. 210-0144
www.mds-sf.com
PROJECT # 23087.00

REGISTERED PROFESSIONAL ENGINEER DAREL ANGELL No. M 26561 EXP. 9/30/06 MECHANICAL STATE OF CALIFORNIA

DIABLO VALLEY COLLEGE

DIABLO VALLEY COLLEGE NEW BOOKSTORE

321 GOLF CLUB RD.
PLEASANT HILL, CALIFORNIA

DATE: 23 JULY, 2004

0 REVISIONS- 23 JULY, 2004

BID SET

SHEET TITLE:

SCHEDULES AND GENERAL NOTES

IDENTIFICATION STAMP
DIVISION OF THE STATE ARCHITECT
105925
APPL 01
AC LE FLS ED SS AL
DATE: 5-12-04 JUL 2 6 2004

BLDG. ID: 098
ID CODE: 312098-109.01-A

DRAWN BY: JLW/LK
CHECKED BY: DA
JOB NO: 0307

SHEET P0.2

07/19/04 10:32:15 AM F:\C..23000\23087.00 DVC NEW BOOKSTORE\DRAWINGS\23087P02.DWG jeff

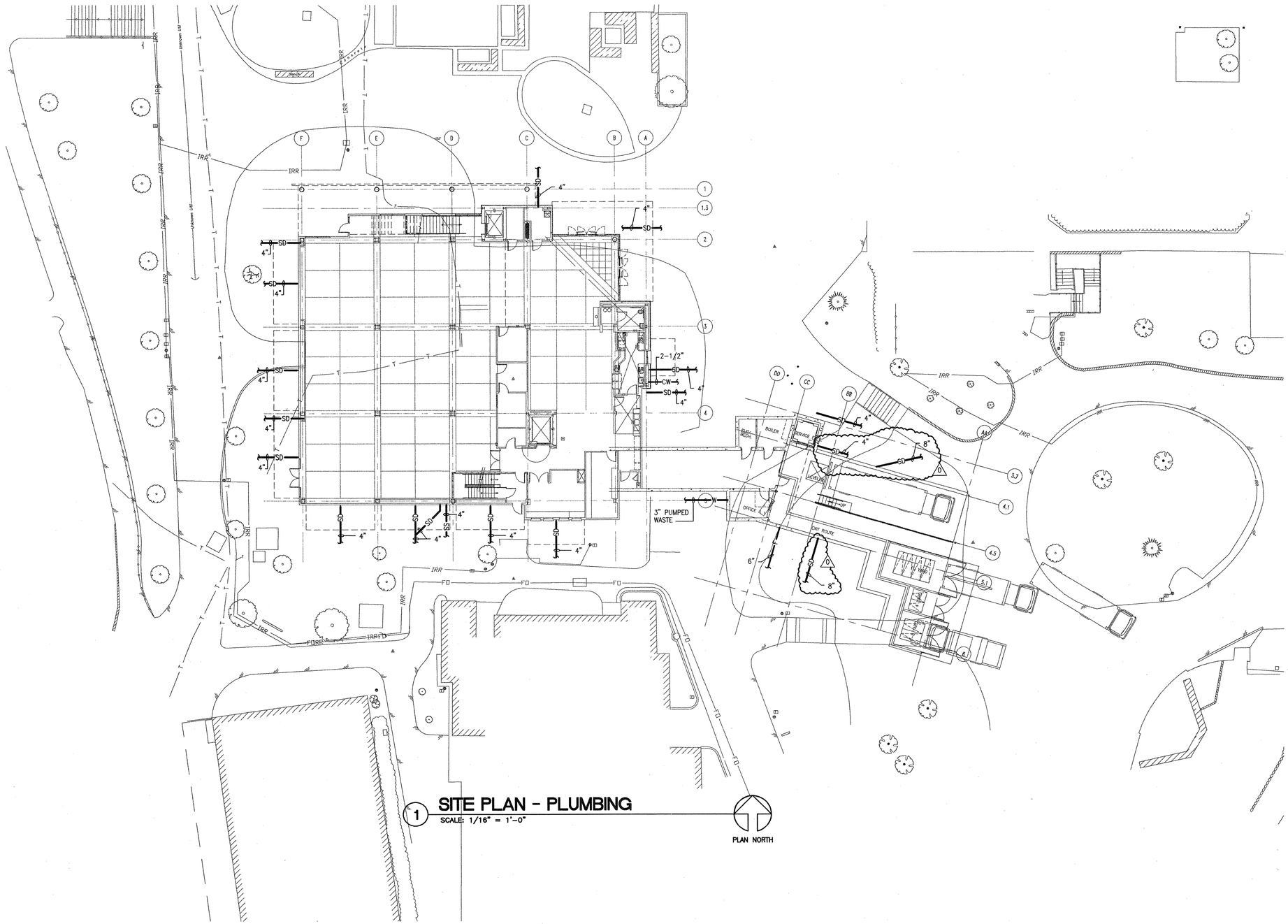

1 SITE PLAN - PLUMBING
SCALE: 1/16" = 1'-0"

PLAN NORTH

MECHANICAL DESIGN STUDIO *inc*
1777 Oakland Blvd., Suite 210
Walnut Creek, California 94596
tel 925. 210-0100
fax 925. 210-0144
www.mds-sf.com
PROJECT # 23087.00

REGISTERED PROFESSIONAL ENGINEER
DOREE ANDRE
No. M 26561
EXP. 9/30/06
MECHANICAL
STATE OF CALIFORNIA

DIABLO VALLEY COLLEGE NEW BOOKSTORE

321 GOLF CLUB RD.
PLEASANT HILL, CALIFORNIA

DATE: 23 JULY, 2004

0 REVISIONS- 23 JULY, 2004

BID SET

SHEET TITLE:

SITE PLAN - PLUMBING

IDENTIFICATION STAMP
DIVISION OF THE STATE ARCHITECT
105925
APPL 01
AC UE FLS EO SS A1
DATE: 5-12-04 JUL 26 2004

BLDG. ID: 098
ID CODE: 312098-109.01-A

DRAWN BY: JLW/LK
CHECKED BY: DA
JOB NO: 0307

SHEET
P1.0

07/19/04 10:34:18 AM F:\C_23000\23087.00 DVC NEW BOOKSTORE\DRAWINGS\23087P10.DWG jeff

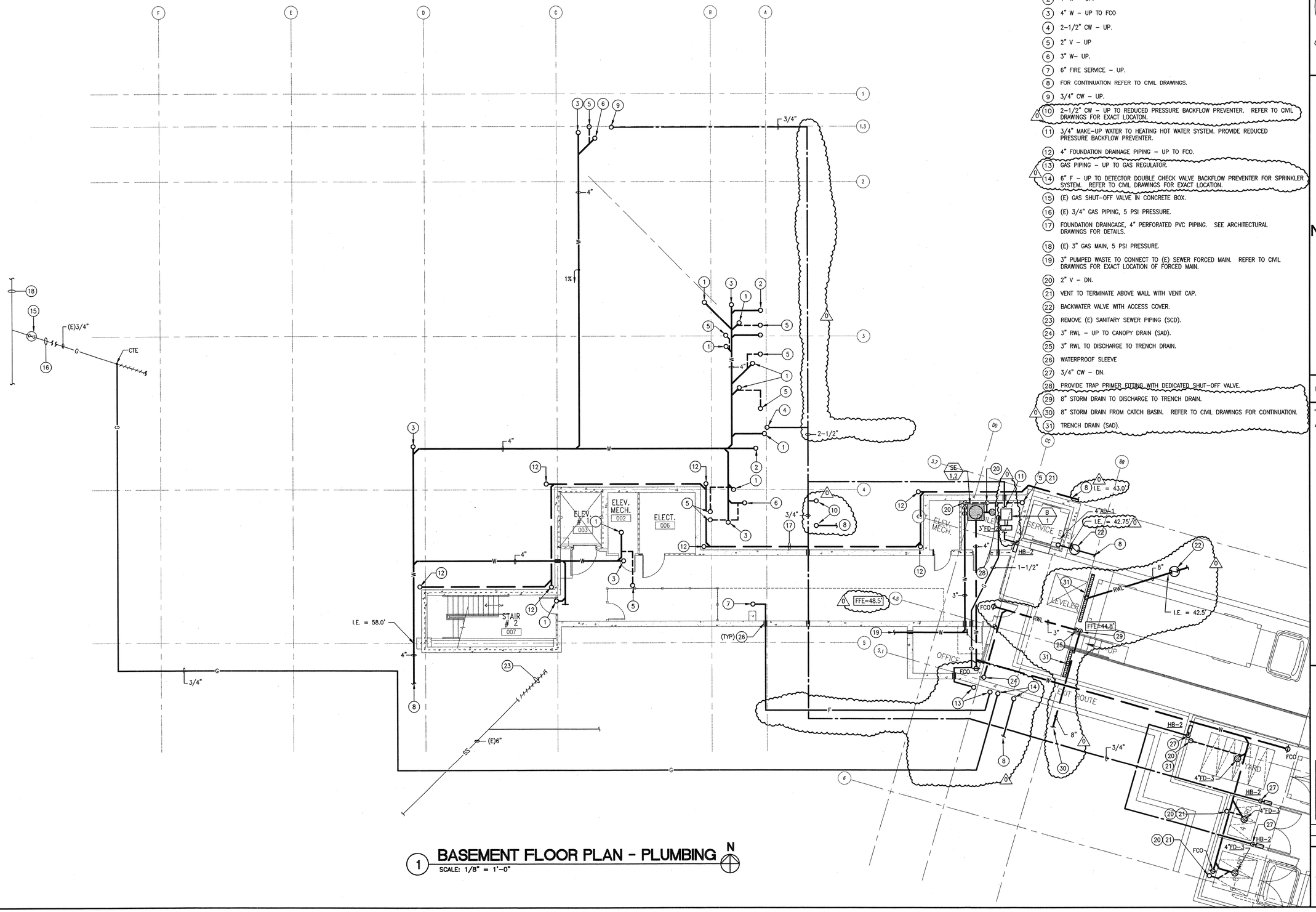

1 BASEMENT FLOOR PLAN - PLUMBING

SCALE: 1/8" = 1'-0"

N

SHEET NOTES

1. 2" W – UP.
2. 4" W – UP.
3. 4" W – UP TO FCO
4. 2-1/2" CW – UP.
5. 2" V – UP
6. 3" W– UP.
7. 6" FIRE SERVICE – UP.
8. FOR CONTINUATION REFER TO CIVIL DRAWINGS.
9. 3/4" CW – UP.
10. 2-1/2" CW – UP TO REDUCED PRESSURE BACKFLOW PREVENTER. REFER TO CIVIL DRAWINGS FOR EXACT LOCATION.
11. 3/4" MAKE-UP WATER TO HEATING HOT WATER SYSTEM. PROVIDE REDUCED PRESSURE BACKFLOW PREVENTER.
12. 4" FOUNDATION DRAINAGE PIPING – UP TO FCO.
13. GAS PIPING – UP TO GAS REGULATOR.
14. 6" F – UP TO DETECTOR DOUBLE CHECK VALVE BACKFLOW PREVENTER FOR SPRINKLER SYSTEM. REFER TO CIVIL DRAWINGS FOR EXACT LOCATION.
15. (E) GAS SHUT-OFF VALVE IN CONCRETE BOX.
16. (E) 3/4" GAS PIPING, 5 PSI PRESSURE.
17. FOUNDATION DRAINGAGE, 4" PERFORATED PVC PIPING. SEE ARCHITECTURAL DRAWINGS FOR DETAILS.
18. (E) 3" GAS MAIN, 5 PSI PRESSURE.
19. 3" PUMPED WASTE TO CONNECT TO (E) SEWER FORCED MAIN. REFER TO CIVIL DRAWINGS FOR EXACT LOCATION OF FORCED MAIN.
20. 2" V – DN.
21. VENT TO TERMINATE ABOVE WALL WITH VENT CAP.
22. BACKWATER VALVE WITH ACCESS COVER.
23. REMOVE (E) SANITARY SEWER PIPING (SCD).
24. 3" RWL – UP TO CANOPY DRAIN (SAD).
25. 3" RWL TO DISCHARGE TO TRENCH DRAIN.
26. WATERPROOF SLEEVE
27. 3/4" CW – DN.
28. PROVIDE TRAP PRIMER FITTING WITH DEDICATED SHUT-OFF VALVE.
29. 8" STORM DRAIN TO DISCHARGE TO TRENCH DRAIN.
30. 8" STORM DRAIN FROM CATCH BASIN. REFER TO CIVIL DRAWINGS FOR CONTINUATION.
31. TRENCH DRAIN (SAD).

MECHANICAL DESIGN STUDIO *inc*
1777 Oakland Blvd. Suite 210
Walnut Creek, California 94596
tel 925. 210-0100
fax 925. 210-0144
www.mds-sf.com
PROJECT # 23087.00

REGISTERED PROFESSIONAL ENGINEER DOREET ANSPEL No. M 26561 EXP. 9/30/06 MECHANICAL STATE OF CALIFORNIA

DIABLO VALLEY COLLEGE

DIABLO VALLEY COLLEGE NEW BOOKSTORE

321 GOLF CLUB RD.
PLEASANT HILL, CALIFORNIA

DATE: 23 JULY, 2004

0 REVISIONS– 23 JULY, 2004

BID SET

SHEET TITLE:

BASEMENT FLOOR PLAN PLUMBING

IDENTIFICATION STAMP
DIVISION OF THE STATE ARCHITECT
105925
APPL 01
AC LE FLS EO SS AT
DATE: 5-12-04 JUL 2 6 2004

BLDG. ID: 098
ID CODE: 312098-109.01-A

DRAWN BY: JLW/LK
CHECKED BY: DA
JOB NO: 0307

SHEET P2.0

07/19/04 10:32:20 AM F:\C_23000\23087.00 DVC NEW BOOKSTORE\DRAWINGS\23087P20.DWG jeff

GENERAL NOTES

1. ALL INDIRECT WASTE LINES FROM FOOD SERVICE EQUIPMENT SHALL DISCHARGE INDIRECTLY TO FLOOR SINKS.

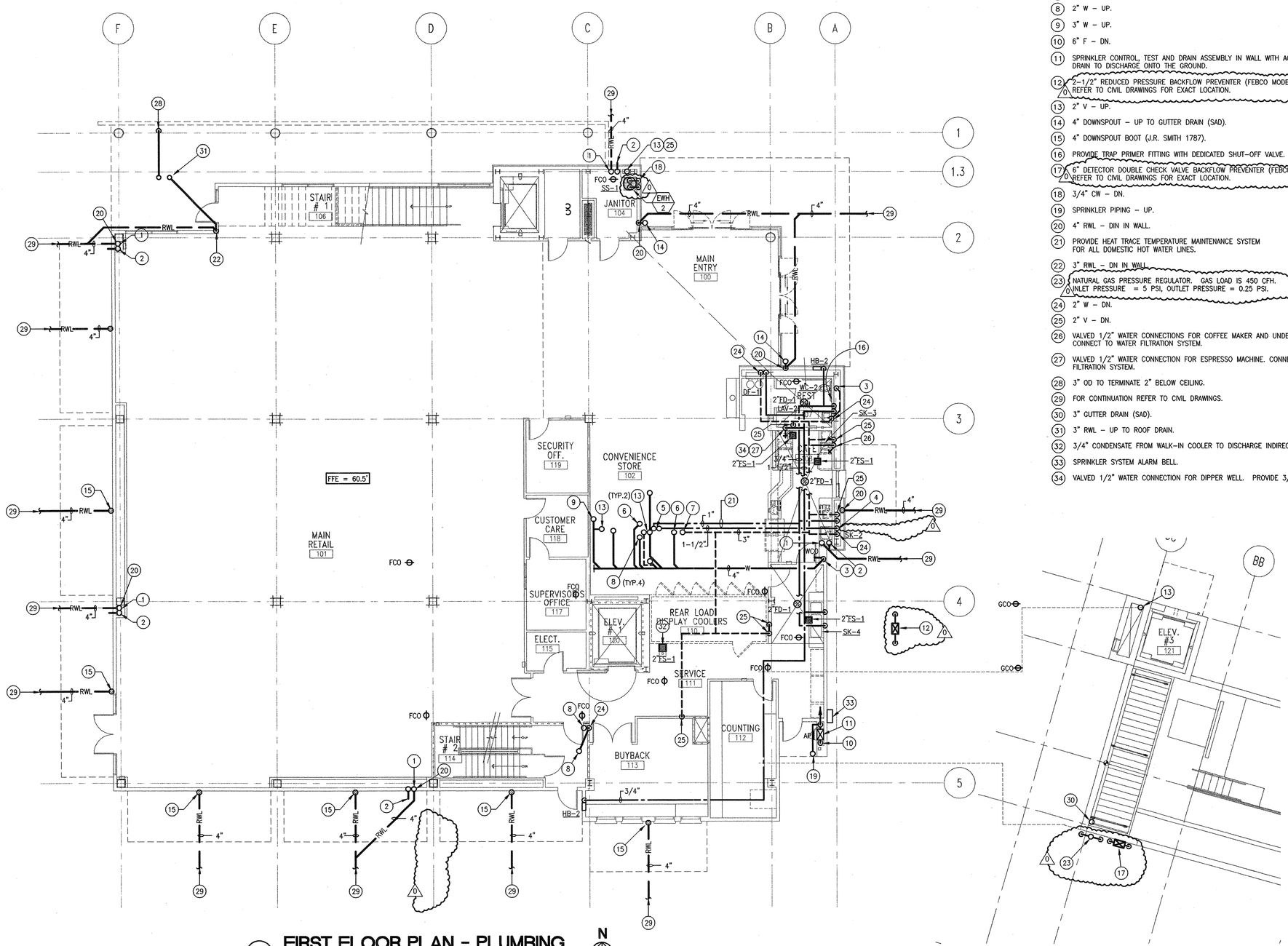

1 FIRST FLOOR PLAN - PLUMBING
SCALE: 1/8" = 1'-0"

SHEET NOTES

1. 4" RWL AND 4" OD – UP
2. 4" OD TO DAYLIGHT 18" ABOVE GROUND (SAD).
3. 4" W – DN.
4. 2-1/2" CW – DN.
5. 1-1/2" CW AND 1" HW – UP.
6. 4" W – UP.
7. 3" V – UP.
8. 2" W – UP.
9. 3" W – UP.
10. 6" F – DN.
11. SPRINKLER CONTROL, TEST AND DRAIN ASSEMBLY IN WALL WITH ACCESS PANEL. DRAIN TO DISCHARGE ONTO THE GROUND.
12. 2-1/2" REDUCED PRESSURE BACKFLOW PREVENTER (FEBCO MODEL 880V). REFER TO CIVIL DRAWINGS FOR EXACT LOCATION.
13. 2" V – UP.
14. 4" DOWNSPOUT – UP TO GUTTER DRAIN (SAD).
15. 4" DOWNSPOUT BOOT (J.R. SMITH 1787).
16. PROVIDE TRAP PRIMER FITTING WITH DEDICATED SHUT-OFF VALVE.
17. 6" DETECTOR DOUBLE CHECK VALVE BACKFLOW PREVENTER (FEBCO MODEL 876V). REFER TO CIVIL DRAWINGS FOR EXACT LOCATION.
18. 3/4" CW – DN.
19. SPRINKLER PIPING – UP.
20. 4" RWL – DIN IN WALL.
21. PROVIDE HEAT TRACE TEMPERATURE MAINTENANCE SYSTEM FOR ALL DOMESTIC HOT WATER LINES.
22. 3" RWL – DN IN WALL.
23. NATURAL GAS PRESSURE REGULATOR. GAS LOAD IS 450 CFH. INLET PRESSURE = 5 PSI, OUTLET PRESSURE = 0.25 PSI.
24. 2" W – DN.
25. 2" V – DN.
26. VALVED 1/2" WATER CONNECTIONS FOR COFFEE MAKER AND UNDERCOUNTER ICE MAKER. CONNECT TO WATER FILTRATION SYSTEM.
27. VALVED 1/2" WATER CONNECTION FOR ESPRESSO MACHINE. CONNECT TO WATER FILTRATION SYSTEM.
28. 3" OD TO TERMINATE 2" BELOW CEILING.
29. FOR CONTINUATION REFER TO CIVIL DRAWINGS.
30. 3" GUTTER DRAIN (SAD).
31. 3" RWL – UP TO ROOF DRAIN.
32. 3/4" CONDENSATE FROM WALK-IN COOLER TO DISCHARGE INDIRECTLY TO FLOOR SINK.
33. SPRINKLER SYSTEM ALARM BELL.
34. VALVED 1/2" WATER CONNECTION FOR DIPPER WELL. PROVIDE 3/4" INDIRECT DRAIN.

MECHANICAL DESIGN STUDIO inc
1777 Oakland Blvd. Suite 210
Walnut Creek, California 94596
tel 925. 210-0100
fax 925. 210-0144
www.mds-sf.com
PROJECT # 23087.00

REGISTERED PROFESSIONAL ENGINEER DOREL ANGHEL No. M 26561 EXP. 9/30/06 MECHANICAL STATE OF CALIFORNIA

DIABLO VALLEY COLLEGE

DIABLO VALLEY COLLEGE NEW BOOKSTORE

321 GOLF CLUB RD.
PLEASANT HILL, CALIFORNIA

DATE: 23 JULY, 2004

0 REVISIONS- 23 JULY, 2004

BID SET

SHEET TITLE:

FIRST FLOOR PLAN PLUMBING

IDENTIFICATION STAMP
DIVISION OF THE STATE ARCHITECT
105925
APPL 01
AC LE FLS ED SS A1
DATE: 5-12-04 JUL 26 2004

BLDG. ID: 098
ID CODE: 312098-109.01-A

DRAWN BY: JLW/LK
CHECKED BY: DA
JOB NO: 0307

SHEET P2.1

07/19/04 10:32:25 AM F:\C_23000\23087.00 DVC NEW BOOKSTORE\DRAWINGS\23087P21.DWG jeff

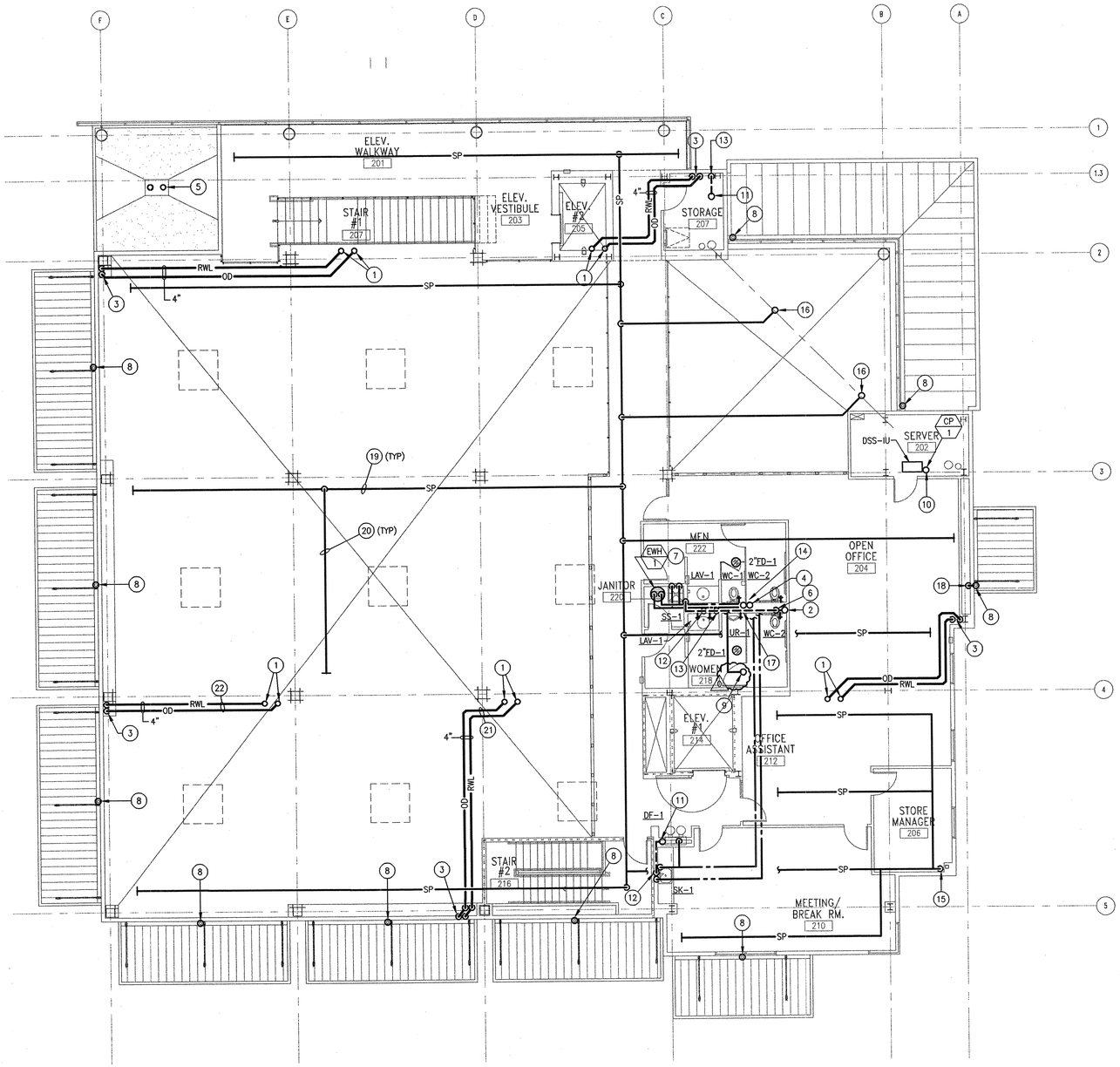

1 SECOND FLOOR PLAN - PLUMBING

SCALE: 1/8" = 1'-0"

N

SHEET NOTES

1. 4" RWL AND 4" OD – UP TO RD-1 AND OD-1.
2. 4" VTR .
3. 4" RWL AND 4" OD – DN IN FURRED WALL.
4. 1-1/2" CW AND 1" HW – DN.
5. 3" RD-1 AND 3" OD-1.
6. 4" W AND 3" V – DN.
7. ELECTRIC WATER HEATER INSTALLED NEXT TO MOP SINK SS-1.
8. 4" GUTTER DRAIN (SAD).
9. 3/4" CW – UP.
10. 3/4" PUMPED CONDENSATE – UP.
11. 2" VTR.
12. 2" W – DN.
13. 2" V – DN.
14. PROVIDE TRAP PRIMER FITTING WITH DEDICATED SHUT-OFF VALVE AND WATER HAMMER ARRESTER IN WALL WITH ACCESS PANEL.
15. SPRINKLER PIPING – DN.
16. SPRINKLER PIPING – UP TO ENTRY CEILING.
17. PROVIDE HEAT TRACE TEMPERATURE MAINTENANCE SYSTEM FOR ALL DOMESTIC HOT WATER LINES.
18. 4" RWL – DN.
19. SPRINKLER PIPING TIGHT TO BOTTOM OF 16" BEAMS AND ABOVE DUCTWORK.
20. SPRINKLER BRANCH IN BEAM POCKET.
21. STORM DRAINAGE PIPING TO BE INSTALLED ABOVE DUCTWORK, TIGHT TO BEAM.
22. STORM DRAINAGE PIPING TO BE INSTALLED TIGHT TO BEAMS, PARALLEL WITH DUCTWORK.

MECHANICAL DESIGN STUDIO *inc*
1777 Oakland Blvd. Suite 210
Walnut Creek, California 94596
tel 925. 210-0100
fax 925. 210-0144
www.mds-sf.com
PROJECT # 23087.00

REGISTERED PROFESSIONAL ENGINEER
DOREL ANGAL
No. M 26561
EXP. 9/30/06
MECHANICAL
STATE OF CALIFORNIA

DIABLO VALLEY COLLEGE

DIABLO VALLEY COLLEGE NEW BOOKSTORE

321 GOLF CLUB RD.
PLEASANT HILL, CALIFORNIA

DATE: 23 JULY, 2004

0 REVISIONS- 23 JULY, 2004

BID SET

SHEET TITLE:

SECOND FLOOR PLAN PLUMBING

IDENTIFICATION STAMP
DIVISION OF THE STATE ARCHITECT
105925
APPL 01
AC UE FLS 50 SS 41
DATE: 5-12-04 JUL 26 2004

BLDG. ID: 098
ID CODE: 312098-109.01-A

DRAWN BY: JLW/LK
CHECKED BY: DA
JOB NO: 0307

SHEET P2.2

07/19/04 10:32:30 AM F:\C_23000\23087.00 DVC NEW BOOKSTORE\DRAWINGS\23087P22.DWG jeff

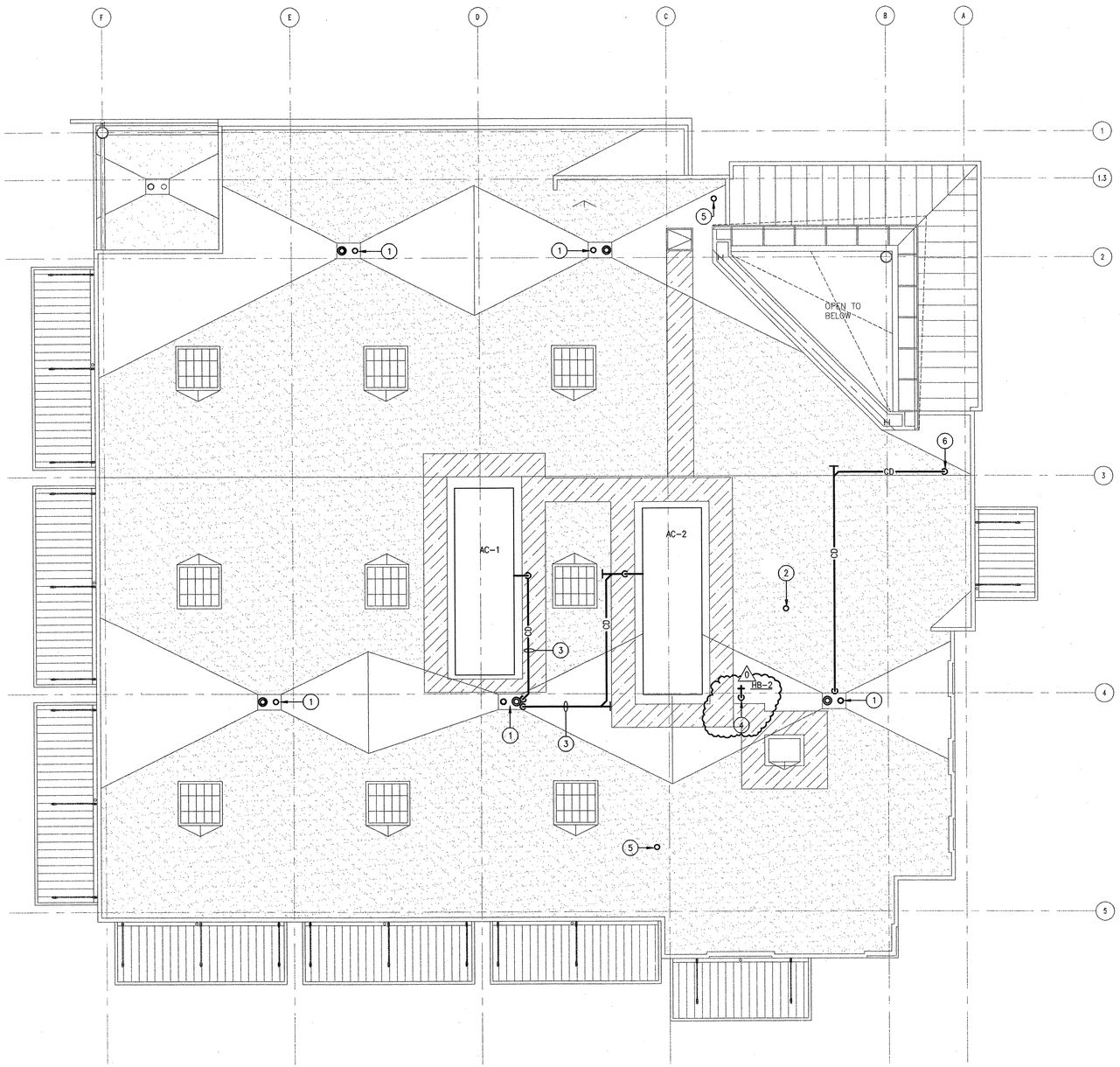

SHEET NOTES

1. 4" RD-1 AND 4" OD-1.
2. 3" VTR – UP.
3. 1-1/2" CONDENSATE DRAINAGE TO DISCHARGE INDIRECTLY INTO THE ROOF DRAIN.
4. 3/4" CW – DN.
5. 2" VTR.
6. 3/4" PUMPED CONDENSATE DRAIN TO DISCHARGE INDIRECTLY INTO THE ROOF DRAIN.

1 ROOF PLAN - PLUMBING
SCALE: 1/8" = 1'-0"

N

MECHANICAL DESIGN STUDIO inc
1777 Oakland Blvd. Suite 210
Walnut Creek, California 94596
tel 925. 210-0100
fax 925. 210-0144
www.mds-sf.com
PROJECT # 23087.00

REGISTERED PROFESSIONAL ENGINEER
DAREL ANDERSON
No. M 26561
EXP. 9/30/06
MECHANICAL
STATE OF CALIFORNIA

DIABLO VALLEY COLLEGE

DIABLO VALLEY COLLEGE NEW BOOKSTORE

321 GOLF CLUB RD.
PLEASANT HILL, CALIFORNIA

DATE: 23 JULY, 2004

0 REVISIONS– 23 JULY, 2004

BID SET

SHEET TITLE:
ROOF PLAN PLUMBING

IDENTIFICATION STAMP
DIVISION OF THE STATE ARCHITECT
105925
APPL 01
AC VE FLS EO SS AI
DATE: 5-12-04 JUL 26 2004

BLDG. ID: 098
ID CODE: 312098-109.01-A

DRAWN BY: JLW/LK
CHECKED BY: DA
JOB NO: 0307

SHEET
P2.3

07/19/04 10:32:35 AM F:\C_23000\23087.00 DVC NEW BOOKSTORE\DRAWINGS\23087P23.DWG jeff

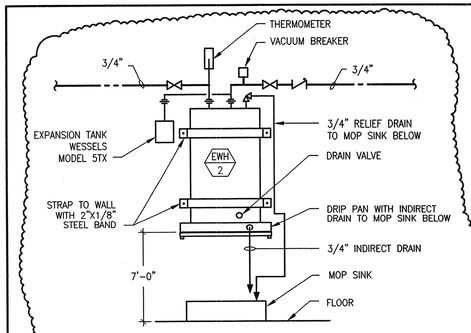

10 WATER HEATER DETAIL
SCALE: NONE

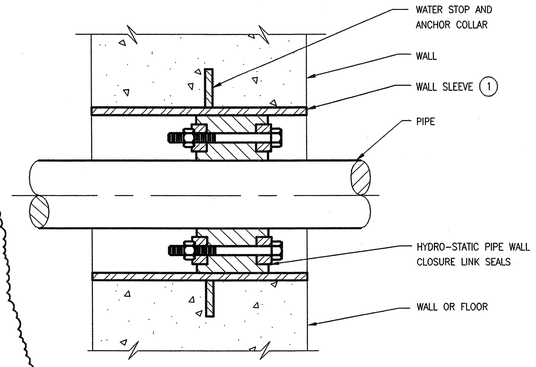

NOTE:

1 FOR EXISTING WALLS, WALL SLEEVE IS NOT REQUIRED. PROVIDE WALL COVER IN ACCORDANCE WITH LINK SEAL MANUFACTURER'S REQUIREMENTS.

8 WATERPROOF PIPE PENETRATION DETAIL
SCALE: NONE

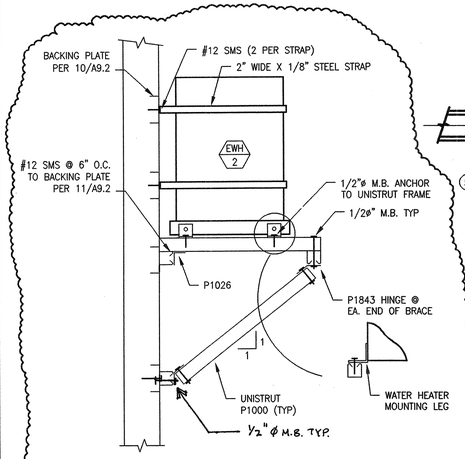

11 ELECTRIC WATER HEATER SUPPORT DETAIL
SCALE: NONE

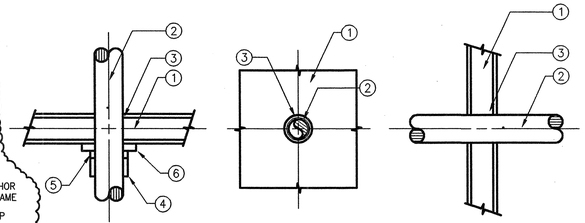

PACK SPACE BETWEEN PIPING AND PENETRATION OPENING WITH MATERIAL APPROVED BY UNDERWRITERS LABORATORIES FOR THROUGH PENETRATION FIRE STOP SYSTEMS. MATERIALS, METHODS, AND INSTALLATION SHALL BE IN ACCORDANCE WITH UL APPROVED LISTING AND SHALL BE DESIGNED TO ACT AS A FIRESTOP AS WELL AS A COLD SMOKE, NOXIOUS GAS AND WATER SEALANT. SUBMIT LISTING NUMBERS AND DETAILS FROM UL FIRE RESISTANT DIRECTORY FOR ALL SUCH SYSTEMS TO BE USED. INSULATE PIPES 3 FEET TO EITHER SIDE OF PENETRATION WITH MATERIAL SPECIFIED IN THE UL FIRE RESISTANCE DIRECTORY IF REQUIRED TO OBTAIN THE T- AND F- RATINGS.

1. WALL AND FLOOR
2. PIPE OR INSULATED PIPE
3. FIRE BARRIER – "3M PRODUCTS INC." FIRE BARRIER CAULK CP25 WB+, CP 25WB, CP 25 N/S AND S/L, FIRE BARRIER 2000+, 2000 AND 2003 SILICONE SEALANTS, MOLDABLE PUTTY.
4. PIPE COVERING FOR FLAME RETARDANT POLYPROPYLENE ACID WASTE PIPING FIRE STOPPING ASSEMBLY.
5. STEEL COLLAR FOR FRPP FIRE STOPPING ASSEMBLY.
6. PACKING MATERIAL FOR FRPP FIRE STOPPING ASSEMBLY.

USE FOLLOWING APPLICABLE UL SYSTEMS FOR THE CONSTRUCTION TYPES LISTED.

CONSTRUCTION TYPE	THROUGH PENETRATION FIRESTOP SYSTEM NUMBERS
CONCRETE FLOORS	CAJ1007 (F-2, 3, 4 HR; T-0 HR), CAJ1010 (F-2 HR; T-0 HR), CAJ1012 (F-1 HR; T-0 HR), CAJ1017 (F-2, 3 HR; T-0 HR), CAJ1021 (F-3 HR; T-0, 1.5 HR), CAJ1027 (F-3 HR; T-0 HR), CAJ1044 (F-2, 3, 4 HR; T-0 HR), CAJ1058 (F-3 HR; T-3 HR), CAJ1063 (F-3 HR; T-0.5 HR), CAJ1112 (F-2 HR; T-0 HR), CAJ1175 (F-2 HR; T-0 HR), CAJ5001 (F-1.5, 2, 3 HR; T-0, 0.5, 0.75, 1 HR), CAJ5002 (F-2, 3 HR; T-0, 0.5, 1 HR), CAJ5003 (F-2 HR; T-0.5, 1 HR), CAJ5024 (F-2, 3 HR; T-1, 1.5 HR), CAJ5060 (F-2, 3 HR; T-0, 0.75, 1, 1.5 HR), CBJ1020 (F-4 HR; T-0, 0.75, 1.5 HR) FOR FLAME RETARDANT POLYPROPYLENE ACID WASTE PIPING USE SYSTEM NO. FA 2002 (F-1, 1.5,2 HR; T-1, 1.5, 2 HR)
CONCRETE OR MASONRY WALLS	CAJ1001 (F-3 HR; T-0 HR), CAJ1017 (F-2, 3 HR; T-0 HR), CAJ1021 (F-3 HR; T-0, 1.5 HR), CAJ1027 (F-3 HR; T-0 HR), CAJ1044 (F-2, 3, 4 HR; T-0 HR), CAJ1058 (F-3 HR; T-0 HR), CAJ1063 (F-3 HR; T-0.5 HR), CAJ1112 (F-2 HR; T-0 HR), CAJ1175 (F-2 HR; T-0 HR), CAJ5001 (F-1.5, 2, 3 HR; T-0, 0.5, 0.75, 1 HR), CAJ5002 (F-2, 3 HR; T-0, 0.5, 1 HR), CAJ5003 (F-2 HR; T-0.5, 1 HR), CAJ5024 (F-2, 3 HR; T-1, 1.5 HR), CAJ5060 (F-2, 3 HR; T-0, 0.75, 1, 1.5 HR), CBJ1020 (F-4 HR; T-0, 0.75, 1.5 HR)
GYPSUM WALLBOARD/STUD WALLS	WL1001 (F-1, 2, 3, 4 HR; T-0, 1, 2, 3, 4 HR), WL1002 (F-1, 2 HR; T-0 HR), WL1003 (F-1, 2 HR; T-0 HR), WL2002 (F-1, 1.5, 2 HR, T-0.75, 1, 1.5, 2 HR), WL2003 (F-1, 2 HR; T-1, 2 HR), WL2004 (F-2 HR; T-0.75, 1.5, 2 HR), WL2005 (F-1, 2 HR; T-0, 0.75, 1, 1.5, 2 HR), WL5001 (F-1, 2 HR; T-1, 1.5 HR), WL5002 (F-1, 2 HR; T-1, 2 HR)

9 PIPE PENETRATION THROUGH FIRE RATED PARTITIONS DETAIL
SCALE: NONE

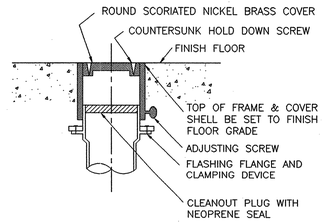

4 FLOOR CLEANOUT DETAIL
SCALE: NONE

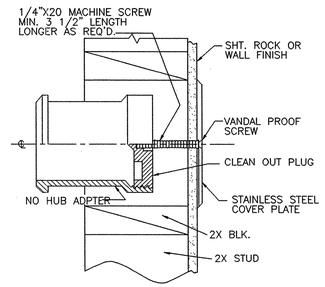

5 WALL CLEANOUT DETAIL
SCALE: NONE

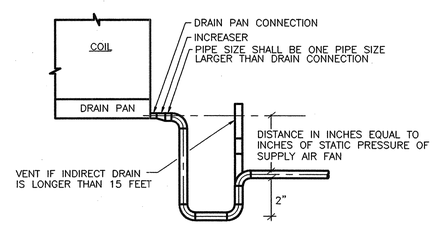

6 CONDENSATE DRAIN TRAP PIPING DETAIL
SCALE: NONE

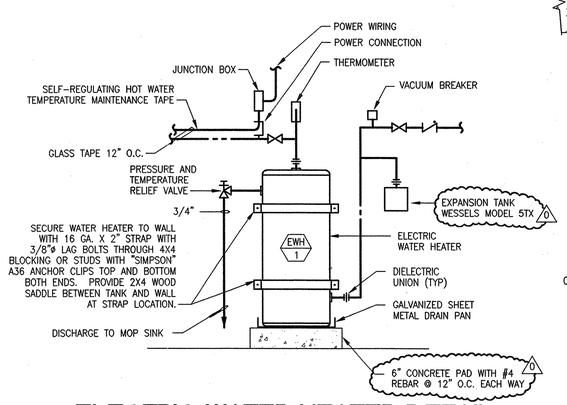

7 ELECTRIC WATER HEATER DETAIL
SCALE: NONE

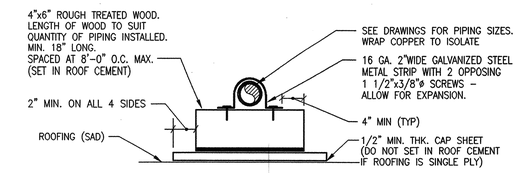

1 ABOVE ROOF PIPING SUPPORT DETAIL
SCALE: NONE

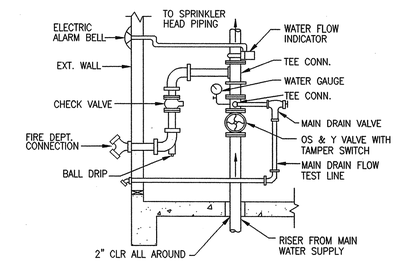

2 FIRE SPRINKLER RISER
SCALE: NONE

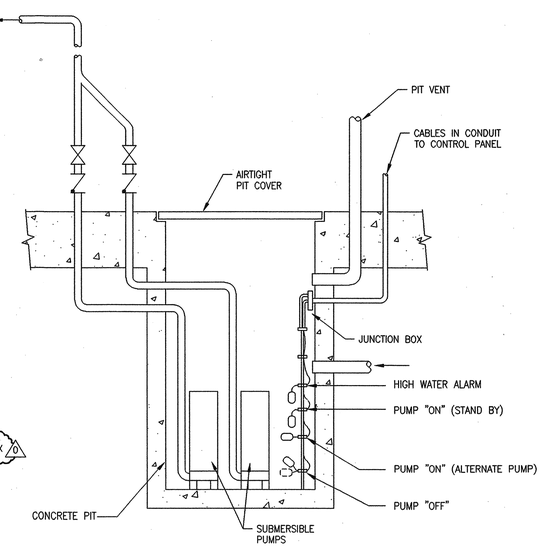

3 SEWAGE EJECTOR (DUPLEX CONTROL PANEL)
SCALE: NONE

MECHANICAL DESIGN STUDIO inc
1777 Oakland Blvd. Suite 210
Walnut Creek, California 94596
tel 925. 210-0100
fax 925. 210-0144
www.mds-sf.com
PROJECT # 23087.00

REGISTERED PROFESSIONAL ENGINEER DERREL ANDREE No. M 26561 EXP. 9/30/06 MECHANICAL STATE OF CALIFORNIA

DIABLO VALLEY COLLEGE

DIABLO VALLEY COLLEGE NEW BOOKSTORE

321 GOLF CLUB RD.
PLEASANT HILL, CALIFORNIA

DATE: 23 JULY, 2004

0 REVISIONS– 23 JULY, 2004

BID SET

SHEET TITLE:
DETAILS

IDENTIFICATION STAMP
DIVISION OF THE STATE ARCHITECT
105925
APPL 01
AC LE FLS EO SS A1
DATE: 5-12-04 JUL 26 2004

BLDG. ID: 098
ID CODE: 312098-109.01-A

DRAWN BY: JLW/LK
CHECKED BY: DA
JOB NO: 0307

SHEET
P3.1

07/23/04 3:10:15 PM F:\C_23000\23087.00 DVC NEW BOOKSTORE\DRAWINGS\23087P31.DWG jeff

DIABLO_VALLEY_COLLEGE_BOOKSTORE-203066

Jul 20, 2004 - 11:38am jkirk P:\2003\DIABLO_VALLEY_COLLEGE_BOOKSTORE-203066\CAD\E01-DVC_BOOKSTORE.DWG

GENERAL NOTES

1. PRIOR TO BID THE CONTRACTOR SHALL VISIT THE SITE TO ADEQUATELY DETERMINE ALL PRE-EXISTING CONDITIONS. BY THE ACT OF SUBMITTING A BID, THE CONTRACTOR WILL BE DEEMED TO HAVE COMPLIED WITH THE FOREGOING, TO HAVE ACCEPTED SUCH CONDITIONS, AND TO HAVE MADE ALLOWANCES THEREFORE IN PREPARING THE BID.
2. PROVIDE PARITY SIZED GREEN GROUND WIRE IN ALL POWER CONDUITS, BRANCH CIRCUITS (LIGHTING & POWER) AND HOMERUNS. PROVIDE ADDITIONAL ISOLATED GROUND, GREEN WITH YELLOW STRIPE, TO ALL ISOLATED GROUND RECEPTACLES.
3. PROVIDE PULLROPE IN ALL EMPTY CONDUITS THROUGHOUT THE PROJECT.
4. REFER TO ARCHITECTURAL REFLECTED CEILING PLANS, ELEVATIONS, AND DETAILS FOR EXACT LOCATION & CONNECTION REQUIREMENTS OF ALL LIGHTING FIXTURES. COORDINATE LOCATIONS OF ALL LIGHTING FIXTURES, OUTLETS AND JUNCTION BOXES WITH DIVISION 15 PRIOR TO ROUGH-IN.
5. REFER TO MECHANICAL PLANS FOR EXACT LOCATION OF ALL MECHANICAL EQUIPMENT. VERIFY EXACT LOCATION AND CONNECTION REQUIREMENTS OF ALL MECHANICAL EQUIPMENT WITH DIVISION 15 PRIOR TO ROUGH-IN. VERIFY EXACT REQUIREMENTS FOR VOLTAGE, PHASE, HORSE-POWER, OR KVA RATINGS, OF ALL DIVISION 15 EQUIPMENT REQUIRING ELECTRICAL CONNECTION.
6. VERIFY EXACT CONNECTION REQUIREMENTS, OUTLET TYPE, HEIGHT, AND LOCATION OF ALL OWNER SUPPLIED EQUIPMENT OR EQUIPMENT PROVIDED UNDER OTHER SECTIONS OF THE SPECIFICATIONS PRIOR TO ROUGH-IN. REFER TO ARCHITECTURAL DRAWINGS FOR EQUIPMENT LOCATIONS.
7. COORDINATE TRENCHING WITH OWNER AND OTHER TRADES BEFORE BEGINNING WORK.
8. ALL CONDUIT PENETRATIONS THROUGH FIRE-RATED WALLS AND FLOORS SHALL BE SEALED AND EQUIPPED WITH U.L. LISTED FIRE PENETRATION ASSEMBLIES TO MAINTAIN FIRE SEPARATION RATING.
9. DO NOT INSTALL ANY OUTLETS BACK TO BACK IN STUD WALLS OR DEMOUNTABLE PARTITIONS.
10. THE CONTRACTOR SHALL VERIFY ALL CEILING TYPES BEFORE ORDERING OF FIXTURES. ALSO VERIFY THAT ALL FEATURES CALLED FOR IN FIXTURE DESCRIPTIONS ON THE FIXTURE SCHEDULE ARE INCLUDED WITH CATALOG NUMBERS LISTED ON THE FIXTURE SCHEDULE AND ARE INCLUDED AS PART OF THE LIGHTING SUBMITTALS FOR THIS PROJECT.
11. CIRCUITRY AND CONDUIT ROUTING SHOWN ON THE PLANS IS DIAGRAMMATIC ONLY. THIS CONTRACTOR IS RESPONSIBLE FOR BECOMING COMPLETELY FAMILIAR WITH THE ARCHITECTURAL AND STRUCTURAL CONDITIONS AND LIMITATIONS IN THE BUILDING AND TO PROVIDE ALL LABOR, TOOLS AND MATERIALS REQUIRED TO PRODUCE A COMPLETELY CONCEALED INSTALLATION WHEREVER INDICATED ON THE PLANS.
12. MAINTAIN "AS-BUILT" RECORDS AT ALL TIMES, SHOWING EXACT LOCATION OF ALL UNDERGROUND AND/OR CONCEALED CONDUITS AND SERVICES INSTALLED UNDER THIS CONTRACT, INCLUDING CIRCUIT IDENTIFICATION WHERE APPLICABLE. PROVIDE OWNER WITH "AS-BUILT" DOCUMENTS AS INDICATED IN THE SPECIFICATIONS.
13. DRAWINGS INDICATE THE LOCATION OF DEVICES, FIXTURES AND EQUIPMENT AND THE CIRCUIT NUMBER AND PANEL DESIGNATION WHICH SUPPLIES THEM. THE CONTRACTOR SHALL BE RESPONSIBLE FOR COMPLETELY CONNECTING ALL ELECTRICAL DEVICES TO CIRCUITS INDICATED ON THE DRAWINGS.
14. UNLESS OTHERWISE NOTED, ALL WORK SHOWN ON DRAWINGS IS NEW AND TO BE PROVIDED AND INSTALLED UNDER THIS CONTRACT.
15. ALL EQUIPMENT GROUNDING SHALL CONFORM TO ARTICLE 250 OF THE NATIONAL ELECTRIC CODE, LATEST EDITION.
16. ALL EXTERIOR CONDUIT ABOVE GRADE INCLUDING ALL ROOF MOUNTED CONDUIT, SHALL BE RIGID GALVANIZED STEEL. COAT ALL EXPOSED THREADS WITH GALVANIZING PAINT.
17. ALL ELECTRICAL WORK SHALL BE CARRIED OUT IN ACCORDANCE WITH THE LATEST EDITION OF THE N.E.C., AS WELL AS STATE, AND LOCAL CODES AND REQUIREMENTS.
18. ALL CONDUIT SHALL BE CONCEALED, UNLESS OTHERWISE NOTED.
19. EQUIPMENT OVERLOADS AND FUSES SHALL BE PROVIDED AND INSTALLED AS PER NAME PLATE ON THE EQUIPMENT ACTUALLY PURCHASED.
20. THE CONTRACTOR SHALL PAY FOR ALL REQUIRED PERMITS AND INSPECTION FEES.
21. THE CONTRACTOR SHALL VERIFY ALL CRITICAL DIMENSIONS WITH THE ARCHITECTURAL DRAWINGS PRIOR TO ROUGH-IN.
22. ALL EXIT SIGNS SHALL COMPLY WITH SECTIONS 1003.2.8, 1003.2.9 AND 1007.2 OF THE C.B.C.
23. ALL DIVISION 15 EQUIPMENT LINE AND LOW VOLTAGE CONTROL WIRING AND RACEWAY SHALL BE PROVIDE AND INSTALLED BY DIVISION 15 U.O.N.
24. COORDINATE INSTALLATION OF ALL RECESSED LIGHT FIXTURES WITH DIVISION 15 PRIOR TO INSTALLATION OF HVAC DUCTS AND SPRINKLER HEADS. ENSURE AFTER INSTALLATION OF FIXTURES THAT THERE IS NO CONTACT BETWEEN DUCTS AND FIXTURES TO AVOID VIBRATION IN FIXTURES.
25. COORDINATE LENGTHS OF WIRE WHIPS CONNECTING MASTER FIXTURES AND SLAVE FIXTURES TO ACCOMMODATE THE SPACING BETWEEN FIXTURES.
26. PROVIDE A DEDICATED NEUTRAL CONDUCTOR FOR ALL BRANCH CIRCUITS OUTLETS AS NOTED ON THE DRAWINGS.
27. FOR FLUSH MOUNTED PANELBOARDS THE CONTRACTOR SHALL STUB FOUR(4) 3/4" CONDUITS FROM THE PANEL INTO THE ACCESSIBLE CEILING ABOVE FOR FUTURE CIRCUITS.
28. ALL CONDUIT CONNECTORS TO OUTLET OR JUNCTION BOXES SHALL HAVE INSULATED THROATS (MANUFACTURED AS AN INTEGRAL PART OF THE CONNECTOR). AFTER-MARKET INSERTABLE THROATS ARE NOT ACCEPTABLE.
29. ALL CIRCUITS IN ALL JUNCTION BOXES AND DEVICES SHALL BE CLEARLY IDENTIFIED BY MEANS OF "EZ" NUMBERING TAGS OR EQUIVALENT TO IDENTIFY THE CIRCUIT NUMBER OR RELAY SUPPLYING THE CONDUCTOR. ALL JUNCTION BOXES SHALL BE LABELED PER SPECIFICATIONS SECTION 16050.

NOTE:

SUBMIT SHOP DRAWINGS FOR ALL EXPOSED CONDUIT ROUTING ON THIS PROJECT FOR APPROVAL PRIOR TO ROUGH-IN.

SYMBOL LIST

— D —	TELEPHONE/DATA SYSTEM CONDUIT AND PULLWIRE; 3/4" U.O.N.
— G —	#4/0 COPPER GROUNDING ELECTRODE CONDUCTOR, U.O.N.
AC-1	MECHANICAL EQUIPMENT DESIGNATION
FA1	LIGHT FIXTURE TAG
3 / E-6	DETAIL DESIGNATION, SEE DETAIL 3, SHEET E-6
1	NUMBERED SHEET NOTE
N.E.C.	NATIONAL ELECTRIC CODE
U.O.N.	UNLESS OTHERWISE NOTED
AFF	ABOVE FINISHED FLOOR
NL	NIGHT LIGHT FIXTURE ON 24 HOURS
EM	EMERGENCY LIGHT FIXTURE WITH BATTERY PACK. COORDINATE "SWITCHED" OR "UNSWITCHED" PER PLAN LAYOUTS AND SWITCHING.
GFI	GROUND FAULT CURRENT INTERRUPTING TYPE RECEPTACLE
NIEC	NOT IN ELECTRICAL CONTRACT
C	CONDUIT
CU	COPPER
T	INDICATES FIXTURES ON TIMECLOCK CONTROL
P	INDICATES FIXTURES ON PHOTOCELL CONTROL
E.C.	ELECTRICAL CONTRACTOR
C.O.	CONDUIT ONLY
S.A.D.	SEE ARCHITECTURAL DRAWINGS
FAAP	FIRE ALARM ANNUNCIATOR PANEL.
FACP	FIRE ALARM CONTROL PANEL.
SACP	SECURITY ALARM CONTROL PANEL.
L.V.	LOW VOLTAGE
(#10 WIRE)	WIRE SIZE #10 AWG FOR ALL CONDUCTORS, INCLUDING GROUND WIRE, THROUGHOUT THE COMPLETE CIRCUIT.
PNL	PANEL
MTD	MOUNTED
MLO	MAIN LUGS ONLY
(E)	EXISTING EQUIPMENT TO REMAIN
(N)	NEW EQUIPMENT.
TVSS	TRANSIENT VOLTAGE SURGE SUPPRESSOR
(ER)	EXISTING EQUIPMENT TO BE RELOCATED.
(EX)	EXISTING EQUIPMENT TO BE DISCONNECTED AND REMOVED.
cu	COPPER

LIST OF ELECTRICAL DRAWINGS

E0.1	GENERAL NOTES, SYMBOL LIST & LIST OF DRAWINGS
E0.2	FIXTURE SCHEDULE
E0.3	TITLE 24 DOCUMENTATION
E1.1	SITE PLAN - ELECTRICAL & LIGHTING
E2.1	BASEMENT FLOOR PLAN - LIGHTING
E2.2	FIRST FLOOR PLAN - LIGHTING
E2.3	SECOND FLOOR PLAN - LIGHTING
E3.1	BASEMENT FLOOR PLAN - POWER & SIGNAL
E3.2	FIRST FLOOR PLAN - POWER & SIGNAL
E3.3	SECOND FLOOR PLAN - POWER & SIGNAL
E3.7	ROOF PLAN - POWER & SIGNAL
E4.1	PARTIAL PLANS
E5.1	POWER SINGLE LINE DIAGRAM
E5.2	TELEPHONE/DATA SYSTEM RISER DIAGRAMS AND DETAILS
E6.1	PANEL SCHEDULES
E6.2	LOW VOLTAGE PANELS AND DETAILS
E6.3	TELEPHONE/DATA SCHEDLUES AND PARTIAL PLANS
E7.1	DETAILS
E7.2	DETAILS
E7.3	DETAILS
E7.4	DETAILS
E7.5	DETAILS
FE0.1	FIRE ALARM EQUIPMENT LIST, NOTES & CALCULATIONS
FE3.1	BASEMENT FLOOR PLAN - FIRE ALARM
FE3.2	FIRST FLOOR PLAN - FIRE ALARM
FE3.3	SECOND FLOOR PLAN - FIRE ALARM
FE3.4	ROOF PLAN - FIRE ALARM
FE5.1	FIRE ALARM SINGLE LINE DIAGRAM
FE7.1	FIRE ALARM DETAILS

SYMBOL LIST

	20A 3PG 125V DUPLEX RECEPTACLE, WEATHERPROOF, UP 18" U.O.N.
GFI	20A 3PG 125V DUPLEX RECEPTACLE, GROUND FAULT CIRCUIT INTERRUPTER TYPE, UP 18" U.O.N.
	20A 3PG 125V DUPLEX RECEPTACLE, UP 42" U.O.N.
	20A 3PG 125V DUPLEX RECEPTACLE, UP 18" U.O.N.
IG	20A 3PG 125V DUPLEX RECEPTACLE, ISOLATED GROUND TYPE, UP 18" U.O.N.
	20A 3PG 125V DOUBLE DUPLEX RECEPTACLE, UP 42" U.O.N.
	FLOOR OUTLET BOX WITH QUANTITY OF 20A 3PG 125V DUPLEX RECEPTACLES AS INDICATED ON PLANS
	SPECIAL RECEPTACLE AS INDICATED ON PLANS
F2	FLOOR BOX, SEE 4/E7.2 OUTLET NUMBER TYPICAL - SEE TELEPHONE/DATA OUTLET SCHEDULES
C	FIRE ALARM CONTROL MODULE.
M	FIRE ALARM MONITORING MODULE.
	SURFACE METAL RACEWAY WITH RECEPTACLES AS INDICATED ON PLANS
	FLUSH-MOUNTED FLOOR BOX WITH FLEXIBLE POWER CONNECTION TO ELECTRIFIED FURNITURE PARTITION FOR POWER AND ONE BOX FOR TELEPHONE/DATA. SEE SPECIFICATIONS.
	SEPARATE POWER AND TELE/DATA WALL BOXES TO FURNITURE PANEL, UP 6" U.O.N.
	TERMINAL MOUNTING BACKBOARD, 3/4" MARINE GRADE FIRE TREATED PLYWOOD, DIMENSIONS AS NOTED ON PLANS, PAINT TO MATCH ADJACENT WALL SURFACE.
F2	TELEPHONE OUTLET, UP 18" U.O.N. OUTLET NUMBER TYPICAL - SEE TELEPHONE/DATA OUTLET SCHEDULES
F2 W	TELEPHONE OUTLET, UP 48" U.O.N. OUTLET NUMBER TYPICAL - SEE TELEPHONE/DATA OUTLET SCHEDULES
F2	COMBINED TELEPHONE/DATA OUTLET, UP 18" U.O.N. OUTLET NUMBER TYPICAL - SEE TELEPHONE/DATA OUTLET SCHEDULES
F2	FIRE RATE POLE-THRU WITH TEL-DATA JACKS. OUTLET NUMBER TYPICAL - SEE TELEPHONE/DATA OUTLET SCHEDULES
	WALL MOUNTED SIGNAL SYSTEM CLOCK OUTLET, UP 8'-0", U.O.N.
TV	WALL MOUNTED CABLE TV OUTLET, UP 18" U.O.N.
TV	FLUSH FLOOR MOUNTED CABLE TV OUTLET
F	FIRE ALARM SYSTEM MANUAL PULL STATION, UP 48" U.O.N.
F 30	FIRE ALARM SYSTEM HORN/STROBE, UP 80" U.O.N. NUMBER ADJACENT INDICATES CANDELA VALUE FOR STROBE
F 15	WEATHERPROOF FIRE ALARM SYSTEM HORN/STROBE UP 10'-6" U.O.N. NUMBER ADJACENT INDICATES CANDELA VALUE FOR STROBE
S 110	FIRE ALARM SYSTEM STROBE, UP 80" U.O.N. NUMBER ADJACENT INDICATES CANDELA VALUE FOR STROBE
FS	FIRE ALARM SYSTEM SPRINKLER FLOW SWITCH. PROVIDE MONITOR MODULE OR ZONED CONNECTION.
TS	FIRE ALARM SYSTEM SPRINKLER VALVE SUPERVISORY SWITCH. PROVIDE MONITOR MODULE OR ZONED CONNECTION.
S	FIRE ALARM SYSTEM CEILING MOUNTED SMOKE DETECTOR
S E	FIRE ALARM SYSTEM SMOKE DETECTOR PROGRAMMED FOR AUTOMATIC RECALL OF ELEVATOR.
H	FIRE ALARM SYSTEM CEILING MOUNTED HEAT DETECTOR
D	FIRE ALARM SYSTEM HVAC DUCT MOUNTED SMOKE DETECTOR. COORDINATE WITH DIV. 15 FOR SUPPLY, INSTALL, AND COMPLETE CONNECTION (INCLUDING CONTROL OF HVAC EQPT.) SEE SPECIFICATIONS.
H	FIRE ALARM SYSTEM MAGNETIC DOOR HOLD-OPEN.
	FIRE ALARM SYSTEM END-OF-LINE RESISTOR.
FSD	FIRE/SMOKE DAMPER, (BY DIV. 15). COORDINATE WITH DIV. 15 FOR MONITORING TO FIRE ALARM SYSTEM (INCLUDING SMOKE DETECTOR PROVISIONS). CONTROL OF DAMPER TO BE BY DIV. 15, U.O.N.
K	WALL MOUNTED SECURITY SYSTEM KEYPAD, UP 60" U.O.N.
DC	SECURITY SYSTEM DOOR CONTACTS.
	WEATHERPROOF ENCLOSURE
	CONDUIT AND WIRE CONCEALED IN CEILING OR WALL
	CONDUIT AND WIRE CONCEALED IN OR UNDER SLAB OR UNDERGROUND
	CONDUIT AND WIRE RUN EXPOSED
	LOW VOLTAGE CONTROL CABLE AND CONDUIT, NUMBER OF DOTS INDICATES QUANTITY OF CABLES, ABSENCE OF DOTS INDICATES ONE CABLE
	CROSSMARKS INDICATE QUANTITY OF #12 CONDUCTORS PLUS PARITY SIZED GROUND CONDUCTOR (SHOWN WITH DOT), NO HASHMARKS INDICATES 2-#12 CONDUCTORS PLUS PARITY SIZED GROUND CONDUCTOR, U.O.N. PROVIDE GROUND CONDUCTORS IN ALL CONDUITS, SHOWN OR NOT.
	FLEXIBLE METALLIC CONDUIT
	HOMERUN TO PANELBOARD OR TERMINAL BOARD, AS NOTED ON PLANS
	COMPLETE CONNECTION OF EQUIPMENT
	CONDUIT STUBBED OUT, CAPPED AND MARKED
	CONDUIT TURNED UP
	CONDUIT TURNED DOWN
— T —	TELEPHONE SYSTEM CONDUIT AND PULLWIRE; 3/4" U.O.N.
— C —	COMPUTER/DATA SYSTEM CONDUIT AND PULLWIRE; 3/4" U.O.N.

SYMBOL LIST

	RECESSED 2'x2' FLUORESCENT FIXTURE WITH 3-#12 U.O.N. IN 48" OF FLEXIBLE CONDUIT TO JUNCTION BOX ABOVE, "MASTER" OR "STAND-ALONE" UNIT.
EM EM EM	INDICATES EMERGENCY OR NITELIGHT FIXTURE WITH QUANTITY OF EMERGENCY BALLAST AS DESIGNATED ON PLANS AND FIXTURE SCHEDULE.
	PENDANT MOUNTED FLUORESCENT UPLIGHT FIXTURE. INDICATES AIRCRAFT CABLE SUPPORT POINT INDICATES PENDANT ELECTRICAL FEED POINT
	SURFACE CEILING, WALL OR COVE MOUNTED FLUORESCENT FIXTURE
	SURFACE OR PENDANT MOUNTED FLUORESCENT STRIP FIXTURE
	SURFACE CEILING OR PENDANT MOUNTED COMPACT FLUORESCENT, H.I.D. OR INCANDESCENT FIXTURE
	COMPACT FLUORESCENT, H.I.D. OR INCANDESCENT RECESSED DOWNLIGHT FIXTURE
	COMPACT FLUORESCENT, H.I.D. OR INCANDESCENT RECESSED WALL-WASH FIXTURE
	WALL MOUNTED COMPACT FLUORESCENT, H.I.D. OR INCANDESCENT FIXTURE
	MONO POINT MOUNTED COMPACT FLUORESCENT WALL-WASHER
	EXTERIOR H.I.D. BOLLARD TYPE FIXTURE
	LINEAR LIGHT TRACK
	H.I.D. TREE UPLIGHT IN GRATE
	WALL MOUNTED EXIT SIGN WITH INTEGRAL EMERGENCY BATTERY BACK-UP AND FACES AND ARROWS AS NOTED ON PLANS.
	PENDANT MOUNTED EXIT SIGN WITH INTEGRAL EMERGENCY BATTERY BACK-UP AND FACES AND ARROWS AS NOTED ON PLANS.
	RECESSED CONCEALED EMERGENCY BATTERY EGRESS LIGHTING FIXTURE WITH NUMBER ADJACENT LOW VOLTAGE HEADS INDICATED
	WALL MOUNTED EMERGENCY BATTERY EGRESS LIGHTING FIXTURE WITH NUMBER OF ADJUSTABLE LOW VOLTAGE INCANDESCENT LAMP HEADS INDICATED.
S_a	LINE VOLTAGE SINGLE POLE TOGGLE SWITCH, LETTER ADJACENT INDICATES RESPECTIVE ZONE CONTROLLED, UP 48" U.O.N.
S_2	LINE VOLTAGE TWO POLE TOGGLE SWITCH, UP 48" U.O.N.
S_3	LINE VOLTAGE THREE-WAY TOGGLE SWITCH, UP 48" U.O.N.
S_p	LINE VOLTAGE TOGGLE SWITCH WITH PILOT LIGHT, LIGHT IS ON WHEN CIRCUIT IS OPEN, UP 48" U.O.N.
S_m	LINE VOLTAGE MOTOR RATED TOGGLE SWITCH
S_K	LINE VOLTAGE KEY OPERATED TOGGLE SWITCH, UP 48" U.O.N.
2 S aa,ac	LOW VOLTAGE DATALINE SWITCH, UP 48" U.O.N. NUMBER INDICATES QUANTITY OF BUTTONS, LETTERING INDICATES RESPECTIVE ZONE CONTROLLER.
ba	LOW VOLTAGE MOMENTARY CONTACT SWITCH, UP 48" U.O.N.
ca	LOW VOLTAGE MOMENTARY CONTACT KEYED SWITCH, UP 48" U.O.N.
DL b	WALL MOUNTED LOW VOLTAGE INCANDESCENT SLIDE DIMMER SWITCH, RATING AS REQUIRED BY INDIVIDUAL LOAD; LOWER CASE LETTER ADJACENT INDICATES LIGHTING ZONE CONTROLLED, UP 48" U.O.N.
DF b	WALL MOUNTED FLUORESCENT DIMMER SWITCH, RATING AS REQUIRED BY INDIVIDUAL LOAD; LOWER CASE LETTER ADJACENT INDICATES LIGHTING ZONE CONTROLLED, UP 48" U.O.N.
OS	WALL SWITCH MOUNTED INFRARED OCCUPANCY SENSOR, UP 48" U.O.N. WATTSTOPPER #WA-200.
a DS b	CEILING MOUNTED ULTRASONIC OCCUPANCY SENSOR TO BE USED WITH POWER PACK. WATTSTOPPER #WT-605, WT-1105, WT-2205. NUMBER ADJACENT INDICATES AREA OF COVERAGE (11=1100, 6=600)
6	CEILING MOUNTED ULTRASONIC OCCUPANCY SENSOR, TO BE USED WITH POWER PACK; NUMBER ADJACENT INDICATES AREA OF COVERAGE. (1=1000 SQ.FT.,2=2000 SQ.FT.,5=500 SQ.FT.,H=HALLWAY SENSOR)
P	OCCUPANCY SENSOR POWER PACK MOUNTED IN CONCEALED ACCESSIBLE LOCATION; WATTSTOPPER #B277E-P.
	MAIN SWITCHBOARD, DISTRIBUTION PANEL OR MOTOR CONTROL CENTER
	FLUSH MOUNTED PANELBOARD, 6'-6" TO TOP
	SURFACE MOUNTED PANELBOARD, 6'-6" TO TOP
	FUSED EQUIPMENT DISCONNECT SWITCH WITH FUSE SIZE AS RECOMMENDED BY EQUIPMENT MANUFACTURER
	MOTOR DISCONNECT SWITCH; HORSEPOWER RATED, NON FUSED.
	COMBINATION MAGNETIC MOTOR STARTER, MOTOR CIRCUIT PROTECTOR AND FUSIBLE DISCONNECT, SEE 5/E7.1
	MAGNETIC MOTOR STARTER, SEE 5/E7.1
	MANUAL MOTOR STARTER WITH OVERLOAD PROTECTION
	MOTOR OUTLET WITH FLEXIBLE CONDUIT CONNECTION
T	TRANSFORMER
	CONCRETE PULLBOX, SIZE AS REQUIRED OR SHOWN
	COPPER GROUND ROD - 3/4"φ x 10'-0" LONG
J	CEILING MOUNTED JUNCTION BOX
J	WALL MOUNTED JUNCTION BOX, UP 18" U.O.N.
J	JUNCTION BOX FLUSH FLOOR MOUNTED
	20A 3PG 125V DOUBLE DUPLEX RECEPTACLE, UP 18" U.O.N.
	DOOR SWITCH

O'MAHONY & MYER
ELECTRICAL and LIGHTING DESIGN
4340 REDWOOD HWY., SUITE 245
SAN RAFAEL, CALIFORNIA 94903
(415) 492-0420/FAX (415) 479-9662
www.ommconsulting.com

DIABLO VALLEY COLLEGE

DIABLO VALLEY COLLEGE NEW BOOKSTORE

321 GOLF CLUB RD.
PLEASANT HILL, CALIFORNIA

REGISTERED PROFESSIONAL ENGINEER PIETER J. COLENBRANDER No. 14738 Exp. 6/07 ELECTRICAL STATE OF CALIFORNIA

DATE: 23 JULY, 2004

REVISIONS:

BID SET

SHEET TITLE:

GENERAL NTS. SYMBOLS LIST & LIST OF DRAWINGS

IDENTIFICATION STAMP
DIVISION OF THE STATE ARCHITECT
105925
APPL 01
AC LE FLS EO SS AL
DATE: 5-12-04 JUL 26 2004

BLDG. ID: 098
ID CODE: 312098-109.01-A
DRAWN BY:
CHECKED BY: PC
JOB NO: 203066
SHEET E0.1

DIABLO_VALLEY_COLLEGE_BOOKSTORE-203066

Jul 20, 2004 - 10:51am jkirk P:\2003\DIABLO_VALLEY_COLLEGE_BOOKSTORE-203066\CAD\E02-DVC_BOOKSTORE.DWG

FIXTURE SCHEDULE

MG1	DESCRIPTION:	SURFACE TRACKHEAD FOR USE ON TYPE A1 TRACK. FORMED ALUMINUM CONSTRUCTION WITH TEMPERED GLASS LENSES. SATIN NICKEL FINISH.
	MANUFACTURER:	TECH LIGHTING 'SPOT' #700TTSPTC-20-3-08-S
	BALLAST:	ELECTRONIC
	LAMPS:	(1) CDM35/PAR20/M/FL
	WATTAGE:	55
	VOLTAGE:	120
	REMARKS:	RETAIL AREA
MH1	DESCRIPTION:	SURFACE MONOPOINT MOUNTED TRACK FIXTURE WITH DIE CAST ALUMINUM PARTS, RUBBERIZED GRIP, AND 18" EXTENSION STEM. DARK TITANIUM FINISH.
	MANUFACTURER:	LIGHTOLIER #8704E/TM/8737/TM-6190BK-6074BK
	BALLAST:	ELECTRONIC
	LAMPS:	(1) CDM35/PAR30L/M/FL
	WATTAGE:	55
	VOLTAGE:	120
	REMARKS:	CONVENIENCE STORE

FIXTURE SCHEDULE

FQ1E	DESCRIPTION:	RECESSED STEPLIGHT WITH CAST ALUMINUM CONSTRUCTION, VERTICAL CAST ALUMINUM LOUVERED FACEPLATE WITH TEMPERED GLASS LENS, AND INTEGRAL EMERGENCY BACKUP BALLAST. FINISH TO BE DETERMINED BY THE ARCHITECT.
	MANUFACTURER:	GARDCO LIGHTING #942EM-DC-2/13TFE-RFPLY-277-FINISH
	BALLAST:	STANDARD HPF
	LAMPS:	(2) F13TT/830
	WATTAGE:	29
	VOLTAGE:	277
	REMARKS:	LOADING DOCK
FR1	DESCRIPTION:	SURFACE MOUNTED UNDERCABINET FIXTURE WITH EXTRUDED ALUMINUM CONSTRUCTION AND CLEAR LINEAR PRISM LENS. INTEGRAL ELECTRONIC BALLAST. FINISH TO BE DETERMINED BY THE ARCHITECT. 2"H X 6"W X 4'L.
	MANUFACTURER:	ALKCO LINCS #150-048-120ECB
	BALLAST:	ELECTRONIC
	LAMPS:	(1) F32T8/830
	WATTAGE:	31
	VOLTAGE:	120
	REMARKS:	CONFERENCE
FS1	DESCRIPTION:	RECESSED 2X4 LENSED TROFFER WITH FORMED STEEL CONSTRUCTION. FLUSH ALUMINUM DOOR FRAME WITH IMPACT RESISTANT PRISMATIC LENS AND INTEGRAL BALLAST. PAINT AFTER FABRICATION WITH INTERNAL SPECULAR SILVER INTERIOR FINISH. 4" DEPTH WITH EARTHQUAKE CLIPS.
	MANUFACTURER:	LITHONIA #2SP-G-2-32-FW-A15-277-GEB-PAF-SSR
	BALLAST:	ELECTRONIC
	LAMPS:	(2) F32T8/830
	WATTAGE:	62
	VOLTAGE:	277
	REMARKS:	STORAGE 109
FS1E	DESCRIPTION:	SIMILAR TO TYPE FS1 EXCEPT WITH INTEGRAL BODINE EMERGENCY BALLAST.
	MANUFACTURER:	LITHONIA #2SP-G-2-32-FW-A15-277-GEB-PAF-SSR-EL(BODINE B50)
	BALLAST:	ELECTRONIC
	LAMPS:	(2) F32T8/830
	WATTAGE:	62
	VOLTAGE:	277
	REMARKS:	STORAGE 109
MA1	DESCRIPTION:	GRADE MOUNTED BOLLARD WITH EXTRUDED AND DIE CAST ALUMINUM CONSTRUCTION. TEMPERED GLASS LENS WITH SILICONE GASKETS. PAINTED FINISH TO BE DETERMINED BY THE ARCHITECT. 42"H X 9.5" DIA.
	MANUFACTURER:	KIM LIGHTING #GEM1-70MH277-FINISH
	BALLAST:	STANDARD HPF
	LAMPS:	(1) MHC70/U/MP/3K
	WATTAGE:	90
	VOLTAGE:	277
	REMARKS:	SITE
MB1	DESCRIPTION:	GRADE MOUNTED TREE UPLIGHT WITH DIE CAST ALUMINUM CONSTRUCTION, TEMPERED LENS, AND CUTOFF HOOD. FACTORY STANDARD FINISH TO BE DETERMINED BY THE ARCHITECT. 5" DIAMETER.
	MANUFACTURER:	GARDCO #DSP5-J-PAR30-39CMHE-277-FINISH-CH
	BALLAST:	ELECTRONIC
	LAMPS:	(1) CDM35/PAR30L/M/FL
	WATTAGE:	55
	VOLTAGE:	277
	REMARKS:	TREE UPLIGHTS
ME1	DESCRIPTION:	WALL RECESSED CUT OFF AREA LIGHTING FIXTURE WITH CAST LOW COPPER ALUMINUM CONSTRUCTION HOUSING WITH SOLID ALUMINUM CONSTRUCTION CUTOFF FACE. MOLDED, TEMPERED FLAT GLASS LENS. FACTORY STANDARD PAINTED FINISH TO BE DETERMINED BY THE ARCHITECT. 9.5" NOMINAL DIAMETER.
	MANUFACTURER:	DEVINE LIGHTING #LMS500-277-FINISH-CP
	BALLAST:	STANDARD HPF
	LAMPS:	(1) MHC70/U/MP/3K
	WATTAGE:	90
	VOLTAGE:	277
	REMARKS:	LOADING DOCK
ME2	DESCRIPTION:	CEILING SURFACE MOUNTED AREA LIGHTING FIXTURE WITH CAST LOW COPPER ALUMINUM CONSTRUCTION HOUSING WITH SOLID ALUMINUM CONSTRUCTION CUTOFF FACE. MOLDED, FULL TEMPERED PRISMED GLASS LENS. FACTORY STANDARD PAINTED FINISH TO BE DETERMINED BY THE ARCHITECT. 11" NOMINAL DIAMETER.
	MANUFACTURER:	KIM LIGHTING #WF20P-70MH277-FINISH
	BALLAST:	STANDARD HPF
	LAMPS:	(1) MHC70/U/MP/3K
	WATTAGE:	90
	VOLTAGE:	277
	REMARKS:	LOADING DOCK AND BUILDING CANOPIES
ME3	DESCRIPTION:	SIMILAR TO TYPE ME1 EXCEPT WALL SURFACE MOUNTED AND HALF PRISMED GLASS FACE.
	MANUFACTURER:	KIM LIGHTING #WF21P-70MH277-FINISH
	BALLAST:	STANDARD HPF
	LAMPS:	(1) MHC70/U/MP/3K
	WATTAGE:	90
	VOLTAGE:	277
	REMARKS:	TRASH ENCLOSURES
MF1	DESCRIPTION:	SURFACE MOUNTED ASYMMETRIC UPLIGHT WITH DIE CAST ALUMINUM CONSTRUCTION, TEMPERED GLASS LENS. VERTICAL AIMING TILT LOCK WITH JUNCTION BOX MOUNTING. CUSTOM COLOR PAINTED FINISH TO BE DETERMINED BY THE ARCHITECT.
	MANUFACTURER:	BEGA #7475MH/277/FINISH
	BALLAST:	ELECTRONIC
	LAMPS:	(1) MHC70T6/U/MP/3K
	WATTAGE:	90
	VOLTAGE:	277
	REMARKS:	ENTRY

FIXTURE SCHEDULE

FH1	DESCRIPTION:	RECESSED 2X2 BASKET FIXTURE WITH FORMED STEEL CONSTRUCTION HOUSING. MATTE WHITE REFLECTOR WITH PERFORATED BASKET WITH OPAL WHITE OVERLAY AND DUAL CIRCUIT OPERATION. 5" DEPTH.
	MANUFACTURER:	FOCAL POINT #FLU-22-2-BX40-S-277-G-PS-DUAL CIRCUIT
	BALLAST:	ELECTRONIC
	LAMPS:	(2) F40TT/830
	WATTAGE:	84
	VOLTAGE:	277
	REMARKS:	OFFICES
FH1E	DESCRIPTION:	SIMILAR TO TYPE FH1 EXCEPT WITH INTEGRAL BODINE EMERGENCY BATTERY PACK.
	MANUFACTURER:	FOCAL POINT #FLU-22-2-BX40-S-277-G-PS-EM(BODINE B50)-DUAL CIRCUIT
	BALLAST:	ELECTRONIC
	LAMPS:	(2) F40TT/830
	WATTAGE:	84
	VOLTAGE:	277
	REMARKS:	OFFICES
FJ1	DESCRIPTION:	PENDANT MOUNTED FIXTURE WITH FORMED ALUMINUM BODY, SJ CORD, AND SANDED ACRYLIC DIFFUSER. WHITE OR BLACK CORD AND STANDARD FACTORY PAINT FINISH TO BE DETERMINED BY THE ARCHITECT. 24" OVERALL HANG HEIGHT.
	MANUFACTURER:	SHAPER LIGHTING #416-CF1/32-277-FINISH-SAND-24"STD
	BALLAST:	ELECTRONIC
	LAMPS:	(1) CFTR32/830
	WATTAGE:	34
	VOLTAGE:	277
	REMARKS:	CORRIDORS
FJ2	DESCRIPTION:	WALL MOUNTED FIXTURE WITH FORMED ALUMINUM BACKPLATE AND SANDED ACRYLIC DIFFUSER. 9.5"H X 9"W.
	MANUFACTURER:	SHAPER LIGHTING #619-CF1/26-277-SAND
	BALLAST:	ELECTRONIC
	LAMPS:	(1) CFTR26/830
	WATTAGE:	28
	VOLTAGE:	277
	REMARKS:	2ND FLOOR OFFICE
FJ3	DESCRIPTION:	SAME AS TYPE FJ1 EXCEPT WITH NARROW BOWL DIFFUSER.
	MANUFACTURER:	SHAPER LIGHTING #419-CF1/32-120-FINISH-SAND-24"STD
	BALLAST:	ELECTRONIC
	LAMPS:	(1) CFTR32/830
	WATTAGE:	34
	VOLTAGE:	120
	REMARKS:	CAFE
FK1	DESCRIPTION:	PENDANT MOUNTED FIXTURE WITH CAST ALUMINUM BODY, SJ CORD, AIRCRAFT CABLE SUSPENSION, AND SEMI-SPECULAR SPUN ALUMINUM REFLECTOR. STANDARD FACTORY PAINT FINISH TO BE DETERMINED BY THE ARCHITECT. OVERALL HANG HEIGHT TO BE DETERMINED IN THE FIELD.
	MANUFACTURER:	LIGHTOLIER #404117U3CC-277
	BALLAST:	ELECTRONIC
	LAMPS:	(1) CFTR42/830
	WATTAGE:	44
	VOLTAGE:	277
	REMARKS:	CONVENIENCE STORE
FM1	DESCRIPTION:	SURFACE MOUNTED ASYMMETRIC COVE UPLIGHT WITH FORMED STEEL CONSTRUCTION, WHITE PAINTED REFLECTOR AND KICKER LENS. INTEGRAL ELECTRONIC BALLAST.
	MANUFACTURER:	PEERLESS #HCM5-1-277
	BALLAST:	ELECTRONIC
	LAMPS:	(1) F54T5HO/830
	WATTAGE:	59
	VOLTAGE:	277
	REMARKS:	ENTRY
FN1	DESCRIPTION:	WALL MOUNTED EXTRUDED ALUMINUM ASYMMETRIC UPLIGHT WITH REMOTE BALLAST, MACHINED ALUMINUM MOUNTING HUBS WITH THREADED CANTILEVER ARMS BY CONTRACTOR, UV AND IMPACT RESISTANT ACRYLIC LENS WITH EPDM GASKET. SILVER FINISH ON FIXTURE BODY. MOUNTING HUBS AND CANTILEVER ARM FINISHED BLACK. LENGTH OF REMOTE BALLAST TO LAMPS NOT TO EXCEED 7'.
	MANUFACTURER:	ELLIPTIPAR #F151-T155-H-FINISH-2-000 / HOB08000
	BALLAST:	ELECTRONIC
	LAMPS:	(1) F54T5HO/830
	WATTAGE:	59
	VOLTAGE:	277
	REMARKS:	FACADE UPLIGHT
FO1	DESCRIPTION:	SURFACE MOUNTED CAST POLYMER JELLY JAR WITH INTEGRAL BALLAST AND SMOOTH COLORED POLYCARBONATE GLOBE. FIXTURE FINISH AND GLOBE COLOR TO BE DETERMINED BY THE ARCHITECT.
	MANUFACTURER:	CANLET #6802FCF13N2-PS(COLOR)
	BALLAST:	ELECTRONIC
	LAMPS:	(1) F13TT/830
	WATTAGE:	17
	VOLTAGE:	277
	REMARKS:	SKYLIGHT WELLS
FP1	DESCRIPTION:	WALL MOUNTED LINEAR WALLWASHER WITH EXTRUDED ALUMINUM CONSTRUCTION, PERFORATED UPPER REFLECTOR, AND BLADE BAFFLE. CANTILEVER ARM MOUNTING. PAINTED FINISH TO BE DETERMINED BY THE ARCHITECT. INTEGRAL ELECTRONIC BALLAST. SEE DRAWINGS FOR ROW LENGTHS.
	MANUFACTURER:	AXIS LIGHTING PICOLO #PICDL-SL-LENGTH-1-T5-A-120-E-CUSTOM WALL
	BALLAST:	ELECTRONIC
	LAMPS:	(1) F28T5/830
	WATTAGE:	30
	VOLTAGE:	120
	REMARKS:	RETAIL AREA WALL ACCENT

FIXTURE SCHEDULE

FE4	DESCRIPTION:	SIMILAR TO TYPE FE1 EXCEPT WITH LENSED WALLWASH REFLECTOR.
	MANUFACTURER:	PRESCOLITE #CFTW832EB-ST812-SS-B6 OR B24
	BALLAST:	ELECTRONIC
	LAMPS:	(1) CFTR32/830
	WATTAGE:	34
	VOLTAGE:	277
	REMARKS:	EXTERIOR CANOPY
FE4A	DESCRIPTION:	SIMILAR TO TYPE FE1 EXCEPT WITH LENSED WALLWASH REFLECTOR AND 120V OPERATION.
	MANUFACTURER:	PRESCOLITE #CFTW832EB-ST812-SS-B6 OR B24
	BALLAST:	ELECTRONIC
	LAMPS:	(1) CFTR32/830
	WATTAGE:	34
	VOLTAGE:	120
	REMARKS:	CAFE
FE5	DESCRIPTION:	SIMILAR TO TYPE FE1 EXCEPT SURFACE MOUNTED CYLINDER.
	MANUFACTURER:	PRESCOLITE #CFS832EB-STF802H-SS
	BALLAST:	ELECTRONIC
	LAMPS:	(1) CFTR32/830
	WATTAGE:	34
	VOLTAGE:	277
	REMARKS:	BRIDGE, UPPER FLOOR STAIRWELL
FF1	DESCRIPTION:	SURFACE MOUNTED LENSED STRIPLIGHT WITH EXTRUDED ALUMINUM CONSTRUCTION AND OPAL WHITE DIFFUSER. WHITE POWDER COAT FINISH. 4' NOMINAL LENGTH.
	MANUFACTURER:	WELLMADE #183-A-148T8-277
	BALLAST:	ELECTRONIC
	LAMPS:	(1) F32T8/830
	WATTAGE:	31
	VOLTAGE:	277
	REMARKS:	STORAGE
FF2E	DESCRIPTION:	SIMILAR TO TYPE FF1 EXCEPT WITH 2 LAMP CROSS SECTION AND INTEGRAL BODINE EMERGENCY BATTERY PACK.
	MANUFACTURER:	WELLMADE #183-A-248T8-EM(BODINE B50)-277
	BALLAST:	ELECTRONIC
	LAMPS:	(2) F32T8/830
	WATTAGE:	59
	VOLTAGE:	277
	REMARKS:	STORAGE
FF3	DESCRIPTION:	SIMILAR TO TYPE FF1 EXCEPT WITH 6' NOMINAL LENGTH AND 120V.
	MANUFACTURER:	WELLMADE #183-A-236-2T8-120
	BALLAST:	ELECTRONIC
	LAMPS:	(4) F25T8/830
	WATTAGE:	88
	VOLTAGE:	120
	REMARKS:	RESTROOM
FF4	DESCRIPTION:	SIMILAR TO TYPE FF1 EXCEPT WITH 2 LAMP CROSS SECTION AND 3' NOMINAL LENGTH.
	MANUFACTURER:	WELLMADE #183-A-236T8-277
	BALLAST:	ELECTRONIC
	LAMPS:	(2) F25T8/830
	WATTAGE:	44
	VOLTAGE:	277
	REMARKS:	STORAGE
FF5	DESCRIPTION:	SIMILAR TO TYPE FF1 EXCEPT 8' NOMINAL LENGTH.
	MANUFACTURER:	WELLMADE #183-A-148-2T8-277
	BALLAST:	ELECTRONIC
	LAMPS:	(2) F32T8/830
	WATTAGE:	59
	VOLTAGE:	277
	REMARKS:	STORAGE
FG1	DESCRIPTION:	PENDANT MOUNTED LINEAR INDIRECT/ DIRECT FIXTURE WITH EXTRUDED ALUMINUM HOUSING, PARABOLIC SEMI-SPECULAR ALUMINUM BAFFLES. STANDARD FACTORY FINISH TO BE DETERMINED BY THE ARCHITECT. ADJUSTABLE AIRCRAFT CABLE SUSPENSION WITH STRAIGHT CORD AND DUAL CIRCUIT OPERATION. SEE DRAWINGS FOR RUN LENGTHS.
	MANUFACTURER:	PEERLESS ENVISION #ENM4-3-32-LENGTH-R12-277-GEB-DCT-F2/XX-FINISH-SSB-ACG
	BALLAST:	ELECTRONIC
	LAMPS:	(3) F32T8/830
	WATTAGE:	90
	VOLTAGE:	277
	REMARKS:	OFFICES
FG2	DESCRIPTION:	SIMILAR TO TYPE FG1 BUT 12' SQUARE PATTERN. SEE DRAWINGS FOR PATTERN DESCRIPTION.
	MANUFACTURER:	PEERLESS ENVISION #ENM4-2-32-LENGTH-R12-277-GEB-DCT-F2/XX-FINISH-SSB-ACG
	BALLAST:	ELECTRONIC
	LAMPS:	(2) F32T8/830
	WATTAGE:	59
	VOLTAGE:	277
	REMARKS:	RETAIL AREA
FG3	DESCRIPTION:	SIMILAR TO TYPE FG1 BUT WITH LUTRON HI-LUME DIMMING BALLASTS.
	MANUFACTURER:	PEERLESS ENVISION #ENM4-3-32-LENGTH-R12-277-LUTRON HI-LUME-DCT-F2/XX-FINISH-SSB-ACG
	BALLAST:	ELECTRONIC
	LAMPS:	(3) F32T8/830
	WATTAGE:	90
	VOLTAGE:	277
	REMARKS:	CONFERENCE
FG4	DESCRIPTION:	SIMILAR TO TYPE FG1 EXCEPT WALL MOUNTED WITH ALUMINUM BAFFLE, OPAL DIFFUSER, AND NUMBER OF LAMPS.
	MANUFACTURER:	PEERLESS CERRA #CRW8-2-32-OPD-LENGTH-R12-277-GEB-DCT-FINISH
	BALLAST:	ELECTRONIC
	LAMPS:	(2) F32T8/830
	WATTAGE:	62
	VOLTAGE:	277
	REMARKS:	COUNTING

FIXTURE SCHEDULE

FA2E	DESCRIPTION:	SIMILAR TO TYPE FA1 EXCEPT WITH 2 LAMP CROSS SECTION AND INTEGRAL EMERGENCY BATTERY PACK.
	MANUFACTURER:	LITHONIA #C-2-32-277-GEB-PAF-WGCUN-EM(BODINE)
	BALLAST:	ELECTRONIC
	LAMPS:	(2) F32T8/830
	WATTAGE:	59
	VOLTAGE:	277
	REMARKS:	PROVIDE SPECIFIED FIXTURE OR APPROVED EQUIVALENT FIXTURE BY WILLIAMS OR COLUMBIA.
FA6	DESCRIPTION:	SIMILAR TO TYPE FA1 EXCEPT 3' NOMINAL LENGTH AND WITHOUT WIRE GUARD.
	MANUFACTURER:	LITHONIA #C-1-25-277-GEB-PAF
	BALLAST:	ELECTRONIC
	LAMPS:	(1) F25T8/830
	WATTAGE:	22
	VOLTAGE:	277
	REMARKS:	PROVIDE SPECIFIED FIXTURE OR APPROVED EQUIVALENT FIXTURE BY WILLIAMS OR COLUMBIA.
FB1	DESCRIPTION:	SURFACE WALL MOUNTED ROUGH SERVICE FIXTURE WITH CAST ALUMINUM HOUSING, INTEGRAL HIGH POWER FACTOR BALLAST, PRISMATIC GLASS GLOBE, AND LAMP GUARD. NATURAL FINISH.
	MANUFACTURER:	CRESCENT / STONCO #VCXL-28-NFL/HPF-1
	BALLAST:	HPF
	LAMPS:	(1) F28PLC/830
	WATTAGE:	30
	VOLTAGE:	120
	REMARKS:	ELEVATOR WORK LIGHT
FC1	DESCRIPTION:	SURFACE MOUNTED STEEL BODY WRAPAROUND FIXTURE WITH HIGH IMPACT ACRYLIC DIFFUSER WITH SONIC WELDED, INJECTION MOLDED, LUMINOUS ENDS. INTEGRAL ELECTRONIC BALLAST AND PAINTED AFTER FABRICATION WHITE BODY FINISH. 4' LENGTH WITH 12" NOMINAL WIDTH.
	MANUFACTURER:	LITHONIA #AW-2-32-AR-277-GEB
	BALLAST:	ELECTRONIC
	LAMPS:	(2) F32T8/830
	WATTAGE:	59
	VOLTAGE:	277
	REMARKS:	PROVIDE SPECIFIED FIXTURE OR APPROVED EQUIVALENT FIXTURE BY WILLIAMS OR COLUMBIA.
FC1E	DESCRIPTION:	SIMILAR TO TYPE FC1 EXCEPT WITH BODINE (B50) INTEGRAL EMERGENCY BATTERY PACK.
	MANUFACTURER:	LITHONIA #AW-2-32-AR-277-GEB-EL(BODINE B50)
	BALLAST:	ELECTRONIC
	LAMPS:	(2) F32T8/830
	WATTAGE:	59
	VOLTAGE:	277
	REMARKS:	TUNNEL. PROVIDE SPECIFIED FIXTURE OR APPROVED EQUIVALENT FIXTURE BY WILLIAMS OR COLUMBIA.
FD1	DESCRIPTION:	INTERIOR POLE MOUNTED FIXTURE WITH DIE CAST AND EXTRUDED ALUMINUM CONSTRUCTION WITH TEMPERED GLASS LENS AND INDIRECT OPTICS. FIXTURE MOUNTED ON 3" DIAMETER 8' POLE. DARK BRONZE FINISH POLE WITH SATIN STAINLESS STEEL HOOD.
	MANUFACTURER:	ARCHITECTURAL AREA LIGHTING #SP2-IND-42CFL-BRZ-SS-277 POLE: PR3-3R8-125-BRZ
	BALLAST:	ELECTRONIC
	LAMPS:	(1) CFTR42/830
	WATTAGE:	44
	VOLTAGE:	120
	REMARKS:	INFORMATION DESK
FE1	DESCRIPTION:	RECESSED DOWNLIGHT WITH FORMED STEEL HOUSING AND SEMI-SPECULAR CLEAR ALZAK SELF FLANGE REFLECTOR. INTEGRAL ELECTRONIC BALLAST. 7.125" NOMINAL RECESS DEPTH. PROVIDE BAR HANGERS FOR APPROPRIATE CEILING TYPE.
	MANUFACTURER:	PRESCOLITE #CFT832HEB-STF802HSS-B6 OR B24
	BALLAST:	ELECTRONIC
	LAMPS:	(1) CFTR32/830
	WATTAGE:	34
	VOLTAGE:	277
	REMARKS:	GENERAL DOWNLIGHT
FE1A	DESCRIPTION:	SIMILAR TO TYPE FE1 EXCEPT 120V OPERATION.
	MANUFACTURER:	PRESCOLITE #CFT832HEB-STF802HSS-B6 OR B24
	BALLAST:	ELECTRONIC
	LAMPS:	(1) CFTR32/830
	WATTAGE:	34
	VOLTAGE:	120
	REMARKS:	CAFE
FE2	DESCRIPTION:	SIMILAR TO TYPE FE1 EXCEPT WITH DOWNLIGHT / WALLWASH REFLECTOR.
	MANUFACTURER:	PRESCOLITE #CFT832HEB-STF802HSS-WW-B6 OR B24
	BALLAST:	ELECTRONIC
	LAMPS:	(1) CFTR32/830
	WATTAGE:	34
	VOLTAGE:	277
	REMARKS:	GENERAL WALLWASHER
FE3	DESCRIPTION:	SIMILAR TO TYPE FE1 EXCEPT WITH LENSED REFLECTOR.
	MANUFACTURER:	PRESCOLITE #CFT832HEB-STF802HSS-L-B6 OR B24
	BALLAST:	ELECTRONIC
	LAMPS:	(1) CFTR32/830
	WATTAGE:	34
	VOLTAGE:	277
	REMARKS:	EXTERIOR CANOPY
FE3A	DESCRIPTION:	SIMILAR TO TYPE FE1 EXCEPT WITH LENSED REFLECTOR, 120 VOLT SUPPLY VOLTAGE.
	MANUFACTURER:	PRESCOLITE #CFT832HEB-STF802HSS-L-B6 OR B24
	BALLAST:	ELECTRONIC
	LAMPS:	(1) CFTR32/830
	WATTAGE:	34
	VOLTAGE:	120
	REMARKS:	CAFE

FIXTURE SCHEDULE

A1	DESCRIPTION:	DISPLAY TRACK MOUNTED TO CUSTOM COLUMN MOUNTED ARMATURE WITH ALL NECESSARY COMPONENTS AND ACCESSORIES TO COMPRISE A FULLY FUNCTIONING SYSTEM. PROVIDE LENGTHS AS INDICATED ON THE DRAWINGS. SATIN NICKEL FINISH WITH RIGID STANDOFFS AND 90 DEGREE CORNER CONNECTORS.
	MANUFACTURER:	TECH LIGHTING - TECH TRAK # 700 SERIES
	VOLTAGE:	120
	REMARKS:	DISPLAY COLUMNS.
B1	DESCRIPTION:	SURFACE MOUNTED LIGHT STRIP WITH POLYCARBONATE CHANNEL, 2" ON CENTER LAMP SPACING, AND 1.8W LAMPS. PROVIDE FACTORY KERFED CHANNEL FOR CURVED INSTALLATION ALONG EDGE OF INFORMATION DESK. REMOTE LOW VOLTAGE TRANSFORMER WITH POWER FEED AT BOTH ENDS. SEE DRAWINGS FOR LAYOUT.
	MANUFACTURER:	ROBERTS STEP-LITE SYSTEMS #SERIES B/1.8/2E/LENGTH
	BALLAST:	REMOTE
	LAMPS:	(6) INCLUDED
	WATTAGE:	12
	VOLTAGE:	120
	REMARKS:	INFORMATION DESK
C1	DESCRIPTION:	SURFACE MOUNTED WET LOCATION DOCK LIGHT WITH DUAL ARMATURE AND COPPER FREE CAST ALUMINUM LAMP HOUSING. ZINC PLATED STEEL HARDWARE WITH TEMPERED GLASS LENS AND WIRE GUARD. ARM LENGTH TO BE DETERMINED.
	MANUFACTURER:	PHOENIX #DL-INC-DWT-LENGTH-120
	BALLAST:	NONE
	LAMPS:	(1) 250PAR38/H/FL
	WATTAGE:	250
	VOLTAGE:	120
	REMARKS:	LOADING DOCK
EM1	DESCRIPTION:	SURFACE MOUNTED EGRESS UNIT WITH INTEGRAL BATTERY BACKUP, 2 LAMPS, OPERABLE DOOR, TEST SWITCH, AND INDICATOR LIGHT. FORMED STEEL HOUSING TO BE PAINTED TO MATCH SURROUNDING MATERIALS. CUSTOM COLOR TO BE DETERMINED BY THE ARCHITECT.
	MANUFACTURER:	CONCEALITE #F5-75-277V-SM-CF
	BALLAST:	STANDARD
	LAMPS:	(2) Q75MR16/NFL
	WATTAGE:	150
	VOLTAGE:	277
	REMARKS:	CONVENIENCE STORE, 2ND FLOOR
EM2	DESCRIPTION:	SIMILAR TO TYPE EM1 EXCEPT RECESS MOUNTED.
	MANUFACTURER:	CONCEALITE #F5-75-277V-CF
	BALLAST:	STANDARD
	LAMPS:	(2) Q75MR16/NFL
	WATTAGE:	150
	VOLTAGE:	277
	REMARKS:	GENERAL EGRESS. PROVIDE PLASTER FRAME AS REQUIRED.
EX1	DESCRIPTION:	WALL MOUNTED EXIT WITH FACES AND ARROWS AS INDICATED ON THE DRAWINGS. PROVIDE FIXTURE BODY WITH GREEN STENCIL FACE AND REMOVABLE CHEVRONS. WHITE OR BLACK FINISH HOUSING WITH GREEN LETTERS ON A WHITE, BLACK, OR BRUSHED ALUMINUM FACE.
	MANUFACTURER:	DUAL LITE SEMPRA #SEDG-HOUSING FINISH-STENCIL FINISH
	BALLAST:	ELECTRONIC
	LAMPS:	(1) INCLUDED
	WATTAGE:	4
	VOLTAGE:	277
	REMARKS:	COORDINATE LOCATION WITH THE ARCHITECT PRIOR TO ROUGH-IN.
EX2	DESCRIPTION:	SIMILAR TO TYPE EX1 EXCEPT CEILING MOUNTED.
	MANUFACTURER:	DUAL LITE SEMPRA #SEDG-HOUSING FINISH-STENCIL FINISH
	BALLAST:	ELECTRONIC
	LAMPS:	(1) INCLUDED
	WATTAGE:	4
	VOLTAGE:	277
	REMARKS:	COORDINATE LOCATION WITH THE ARCHITECT PRIOR TO ROUGH-IN.
FA1	DESCRIPTION:	SURFACE MOUNTED STRIPLIGHT WITH FORMED STEEL HOUSING, ELECTRONIC BALLAST, PAINT AFTER FABRICATION FINISH, AND WIREGUARD. 4' NOMINAL LENGTH.
	MANUFACTURER:	LITHONIA #C-1-32-277-GEB-PAF-WGCUN
	BALLAST:	ELECTRONIC
	LAMPS:	(1) F32T8/830
	WATTAGE:	31
	VOLTAGE:	277
	REMARKS:	PROVIDE SPECIFIED FIXTURE OR APPROVED EQUIVALENT FIXTURE BY WILLIAMS OR COLUMBIA.
FA1E	DESCRIPTION:	SIMILAR TO TYPE FA1 EXCEPT WITH INTEGRAL EMERGENCY BATTERY PACK.
	MANUFACTURER:	LITHONIA #C-1-32-277-GEB-PAF-WGCUN-EM(BODINE B50)
	BALLAST:	ELECTRONIC
	LAMPS:	(1) F32T8/830
	WATTAGE:	31
	VOLTAGE:	277
	REMARKS:	PROVIDE SPECIFIED FIXTURE OR APPROVED EQUIVALENT FIXTURE BY WILLIAMS OR COLUMBIA.
FA2	DESCRIPTION:	SIMILAR TO TYPE FA1 EXCEPT WITH 2 LAMP CROSS SECTION.
	MANUFACTURER:	LITHONIA #C-2-32-277-GEB-PAF-WGCUN
	BALLAST:	ELECTRONIC
	LAMPS:	(2) F32T8/830
	WATTAGE:	59
	VOLTAGE:	277
	REMARKS:	PROVIDE SPECIFIED FIXTURE OR APPROVED EQUIVALENT FIXTURE BY WILLIAMS OR COLUMBIA.

O'MAHONY & MYER
ELECTRICAL and LIGHTING DESIGN
4340 REDWOOD HWY, SUITE 245
SAN RAFAEL, CALIFORNIA 94903
(415) 492-0420/FAX (415) 479-9662
www.ommconsulting.com

DIABLO VALLEY COLLEGE

DIABLO VALLEY COLLEGE NEW BOOKSTORE

321 GOLF CLUB RD.
PLEASANT HILL, CALIFORNIA

REGISTERED PROFESSIONAL ENGINEER
PIETER J. COLENBRANDER
No.14738
Exp. 6/07
ELECTRICAL
STATE OF CALIFORNIA

DATE: 23 JULY, 2004

REVISIONS:

BID SET

SHEET TITLE:

LIGHTING FIXTURE SCHEDULE

IDENTIFICATION STAMP
DIVISION OF THE STATE ARCHITECT
APPL 01 105925
AC LE FLS E2 SS A1
DATE: 5-12-04 JUL 26 2004

BLDG. ID: 098

ID CODE: 312098-109.01-A

DRAWN BY:

CHECKED BY: PC

JOB NO: 203066

SHEET E0.2

DIABLO_VALLEY_COLLEGE_BOOKSTORE-203066

Jul 20, 2004 - 10:52am jkirk P:\2003\DIABLO_VALLEY_COLLEGE_BOOKSTORE-203066\CAD\E03-DVC_BOOKSTORE.DWG

TITLE 24 LIGHTING MANDATORY MEASURES

PROJECT NAME: DIABLO VALLEY COLLEGE BOOKSTORE — DATE: 12.05.03

Section 119 - AUTOMATIC CONTROL DEVICES CERTIFIED

- [X] All automatic control devices specified are certified. All alternate equipment shall be certified and installed as directed by the manufacturer.

Section 130(b) - HIGH-RISE RESIDENTIAL AND HOTEL/MOTEL GUEST ROOMS

- [ ] The lighting systems in the high-rise residential occupancies comply with Standards Section 130(b).
- [ ] The lighting systems in the hotel/motel guest rooms comply with Standards Section 130(b).

Section 130(c) - EXTERIOR BUILDING LIGHTING EFFICACY / CONTROL

- [X] All permanently installed exterior luminaries attached to or powered by the electrical service in buildings that contain conditioned space(s), and employing lamps rated over 100 watts, have a source efficacy of at least 60 lumens per watt (determined by dividing the rated initial lamp lumens by the rated lamp watts).
- [ ] All permanently installed exterior luminaries attached to or powered by the electrical service in buildings that contain conditioned space(s), and employing lamps rated over 100 watts, are controlled by a motion sensor(s).
- [ ] One or more exterior luminaries on the project, with lamps rated over 100 watts, are exempt from the requirements of section 130(c) because they are lights required by health and safety codes, integral to advertising signs, swimming pool lighting (internal and external), theme park lighting, or are temporary outdoor theatrical equipment.

Section 131(a) - INDIVIDUAL ROOM / AREA CONTROLS

- [X] Each room or area in the building with floor-to-ceiling walls is equipped with a separate switch or occupancy sensor device to control the lights. Local switches are within site of the area controlled. Remote switches have pilot lights to indicate remote status.

Section 131(b) - UNIFORM REDUCTION FOR INDIVIDUAL ROOMS

- [X] All rooms and areas greater than 100 square feet and more than 0.8 watts per square foot of lighting load shall be controlled with Bi-level switching for a uniform reduction of the lighting within the room. Lighting in corridors and areas with only one fixture are exempt from this requirement.

Section 131(c) - DAYLIGHT AREA CONTROL

- [X] All rooms with windows and skylights that are greater than 250 square feet and that allow for the effective use of daylight shall have 50 percent of the lamps in each daylight area controlled by a separate switch.
- [ ] The effective use of daylight throughout cannot be accomplished because the windows are continuously shaded by an adjacent structure. A diagram of shading during different times of year is included on the plans.
- [ ] The effective use of daylight throughout cannot be accomplished because the effective aperture of glazing is equal to or less than 0.1 for vertical glazing and 0.01 for horizontal glazing.

Section 131(d)(1) - BUILDING LIGHTING SHUT-OFF

- [X] The building lighting shut-off system consists of an automatic time switch, occupancy sensor, or other automatic control device, with a zone for each floor or area.
- [ ] The building is exempt from the automatic shut-off requirement because it is required to be continuously lit with manual operation, or is a corridor or guest room of a high-rise residential building or hotel/motel.

Section 131(d)(2) - OVERRIDE FOR BUILDING LIGHTING SHUT-OFF

- [ ] The automatic building shut-off system is provided with a manual and readily accessible override switch in sight of the lights in each area. Each area of override does not exceed 5,000 square feet and the override does not allow the lighting to remain on for more than 2 hours when an override is initiated. Holiday schedules are also accommodated.
- [X] This project is exempt from the override requirement. It is a retail store, mall, restaurant, grocery store, church, or theatre.

TITLE 24 LIGHTING MANDATORY MEASURES

PROJECT NAME: DIABLO VALLEY COLLEGE BOOKSTORE — DATE: 12.05.03

Section 131(f) - CONTROL OF EXTERIOR LIGHTING

- [X] All permanently installed exterior luminaries attached to or powered by the electrical service in buildings that contain conditioned space(s) are controlled by a directional photocell or astronomical time switch that automatically turns off.
- [ ] One or more exterior luminaries on the project are exempt from the requirements of section 131(f) because they are lights in parking garages, tunnels, or large covered areas that require illumination during daylight hours.

Section 132 - TANDEM WIRING FOR TWO-LAMP BALLASTS

- [ ] All one and three lamp fluorescent fixtures located in the same room, on the same switch control, and within 10 feet of each other are tandem wired with two-lamp ballasts where required by Standards Section 132.
- [X] All one and three lamp fluorescent fixtures are specified with electronic high-frequency type ballast's and are exempt from the two-lamp tandem wiring requirement.

LIGHTING COMPLIANCE SUMMARY — LTG-2

PROJECT NAME: DIABLO VALLEY COLLEGE BOOKSTORE — DATE: 12.05.03

ACTUAL LIGHTING POWER

LUMINAIRE NAME	TYPE DESCRIPTION	NUMBER OF LUMINAIRES	WATTS PER LUMINAIRE (Including Ballast)	CEC DEFAULT Y	CEC DEFAULT N	TOTAL WATTS
FE1	REC. DWNLT.	1	34	☐	☒	34
FE1A	REC. DWNLT.	2	34	☐	☒	68
FE2	REC. DWNLT. WW	8	34	☐	☒	272
FE4A	REC. LENSED WW	5	34	☐	☒	170
FF1	SURF. STRIP	5	31	☐	☒	155
FF2E	SURF. STRIP	5	59	☐	☒	295
FF3	SURF. STRIP	1	88	☐	☒	88
FF4	SURF. STRIP	2	44	☐	☒	88
FF5	SURF. STRIP	2	59	☐	☒	118
FG1	DIR/IND PENDANT	28	90	☐	☒	2520
FG2	DIR/IND PENDANT	97	59	☐	☒	5723
					SUBTOTAL FROM THIS PAGE	9531
					PLUS SUBTOTAL FROM CONTINUATION PAGE	6093
					PORTABLE LIGHTING (From LTG-1 Part 3 of 3)	
					LESS CONTROL CREDIT WATTS (FROM LTG-3)	
					ADJUSTED ACTUAL WATTS	continued

LIGHTING COMPLIANCE SUMMARY — LTG-2

PROJECT NAME: DIABLO VALLEY COLLEGE BOOKSTORE — DATE: 12.05.03

ACTUAL LIGHTING POWER

LUMINAIRE NAME	TYPE DESCRIPTION	NUMBER OF LUMINAIRES	WATTS PER LUMINAIRE (Including Ballast)	CEC DEFAULT Y	CEC DEFAULT N	TOTAL WATTS
FG3	DIR/IND PENDANT	9	90	☐	☒	810
FH1	2X2 BASKET	13	94	☐	☒	1222
FH1E	2X2 BASKET	1	94	☐	☒	94
FJ1	DEC PENDANT	25	34	☐	☒	850
FJ2	DEC SCONCE	6	28	☐	☒	168
FK1	DEC PENDANT	16	44	☐	☒	704
FM1	COVE UPLIGHT	12	59	☐	☒	708
FO1	CFL JELLYJAR	36	17	☐	☒	612
FP1	DISPLAY WASH	30	30	☐	☒	900
FR1	UNDERCABINET	1	31	☐	☒	31
MF1	MH UPLIGHT	4	90	☐	☒	360
					SUBTOTAL FROM THIS PAGE	6459
					PLUS SUBTOTAL FROM CONTINUATION PAGE	15624
					PORTABLE LIGHTING (From LTG-1 Part 3 of 3)	
					LESS CONTROL CREDIT WATTS (FROM LTG-3)	
					ADJUSTED ACTUAL WATTS	continued

LIGHTING COMPLIANCE SUMMARY — LTG-2

PROJECT NAME: DIABLO VALLEY COLLEGE BOOKSTORE — DATE: 12.05.03

ACTUAL LIGHTING POWER

LUMINAIRE NAME	TYPE DESCRIPTION	NUMBER OF LUMINAIRES	WATTS PER LUMINAIRE (Including Ballast)	CEC DEFAULT Y	CEC DEFAULT N	TOTAL WATTS
MH1	TRACKHEAD	6	55	☐	☒	330
				☐	☐	
				☐	☐	
				☐	☐	
				☐	☐	
				☐	☐	
				☐	☐	
				☐	☐	
				☐	☐	
				☐	☐	
				☐	☐	
					SUBTOTAL FROM THIS PAGE	330
					PLUS SUBTOTAL FROM CONTINUATION PAGE	22083
					PORTABLE LIGHTING (From LTG-1 Part 3 of 3)	167
					LESS CONTROL CREDIT WATTS (FROM LTG-3)	0
					ADJUSTED ACTUAL WATTS	22580

ALLOWED LIGHTING POWER (Choose One Method)

COMPLETE BUILDING METHOD

BUILDING CATEGORY (From § 146(b) Table 1-M)	WATTS PER SF	COMPLETE BLDG. AREA	ALLOWED WATTS
Retail Store	1.7	13620	23154

CERTIFICATE OF COMPLIANCE (Part 2 of 3) — LTG-1

PROJECT NAME: DIABLO VALLEY COLLEGE BOOKSTORE — DATE: 12.05.03

INSTALLED LIGHTING SCHEDULE

NAME	LUMINAIRE DESCRIPTION	LAMPS TYPE DESCRIPTION	LAMPS QTY.	LAMPS WATTS PER LAMP	BALLASTS TYPE DESCRIPTION	BALLASTS QTY.	LUMINAIRE QTY.	LUMINAIRE WATTS/LUMIN.	TOTAL WATTS
FG3	Fluorescent	F32T8/830	3	32	Electronic	1	9	90	810
FH1	Fluorescent	F40TT/830	2	40	Electronic	2	13	94	1222
FH1E	Fluorescent	F40TT/830	2	40	Electronic	2	1	94	94
FJ1	Fluorescent	CFTR32/830	1	32	Electronic	1	25	34	850
FJ2	Fluorescent	CFTR26/830	1	26	Electronic	1	6	28	168
FK1	Fluorescent	CFTR42/830	1	42	Electronic	1	16	44	704
FM1	Fluorescent	F54T5HO/830	1	54	Electronic	1	12	59	708
FO1	Fluorescent	F13TT/830	1	13	Electronic	1	36	17	612
FP1	Fluorescent	F28T5/830	1	28	Electronic	1	30	30	900
FR1	Fluorescent	F32T8/830	1	32	Electronic	1	1	31	31
MF1	Metal Halide	MHC70T6/U/MP	1	70	Electronic	1	4	90	360
								SUBTOTAL FROM THIS PAGE	6459
								PLUS SUBTOTAL FROM CONTINUATION PAGE	15624
								PORTABLE LIGHTING (From LTG-1 Part 3 of 3)	
								LESS CONTROL CREDIT WATTS (From LTG-3)	
								ADJUSTED ACTUAL WATTS	continued

Lighting Schedule on Plans Shows Exterior Lighting Meets
- [ ] Efficacy and Control Requirements of § 130(c)
- [ ] Control Requirements of § 131(f)

CERTIFICATE OF COMPLIANCE (Part 2 of 3) — LTG-1

PROJECT NAME: DIABLO VALLEY COLLEGE BOOKSTORE — DATE: 12.05.03

INSTALLED LIGHTING SCHEDULE

NAME	LUMINAIRE DESCRIPTION	LAMPS TYPE DESCRIPTION	LAMPS QTY.	LAMPS WATTS PER LAMP	BALLASTS TYPE DESCRIPTION	BALLASTS QTY.	LUMINAIRE QTY.	LUMINAIRE WATTS/LUMIN.	TOTAL WATTS
MH1	Metal Halide	CDM35/PAR30L	1	39	Electronic	1	6	55	330
								SUBTOTAL FROM THIS PAGE	330
								PLUS SUBTOTAL FROM CONTINUATION PAGE	22083
								PORTABLE LIGHTING (From LTG-1 Part 3 of 3)	167
								LESS CONTROL CREDIT WATTS (From LTG-3)	0
								ADJUSTED ACTUAL WATTS	22580

Lighting Schedule on Plans Shows Exterior Lighting Meets
- [ ] Efficacy and Control Requirements of § 130(c)
- [ ] Control Requirements of § 131(f)

PORTABLE LIGHTING WORKSHEET (Part 3 of 3) — LTG-1

PROJECT NAME: DIABLO VALLEY COLLEGE BOOKSTORE — DATE: 12.05.03

TABLE 1A - PORTABLE LIGHTING NOT SHOWN ON PLANS FOR OFFICE AREA > 250 SQUARE FEET

A ROOM # OR ZONE ID	B DEFAULT	C AREA (SF)	D TOTAL WATTS (B X C)
OPEN OFFICE	0.2	834	167
	0.2		
	0.2		
	0.2		
	0.2		
	0.2		
	0.2		
	0.2		
	TOTAL	834	167

TABLE 1B - PORTABLE LIGHTING SHOWN ON PLANS FOR OFFICE AREA > 250 SQUARE FEET

A ROOM # OR ZONE ID	B PORTABLE LIGHTING DESCRIPTION(S) PER TASK AREA	C LUMINAIRE(S) WATTS PER TASK AREA	D TASK AREA (SF)	E NUMBER OF TASK AREAS	F TOTAL AREA (SF) (D X E)	G TOTAL WATTS (C X E)
				TOTAL	0	0

LIGHTING COMPLIANCE SUMMARY — LTG-2

PROJECT NAME: DIABLO VALLEY COLLEGE BOOKSTORE — DATE: 12.05.03

ACTUAL LIGHTING POWER

LUMINAIRE NAME	TYPE DESCRIPTION	NUMBER OF LUMINAIRES	WATTS PER LUMINAIRE (Including Ballast)	CEC DEFAULT Y	CEC DEFAULT N	TOTAL WATTS
A1	DISPLAY TRACK	80LF	45/LF	☐	☒	3600
B1	NOSING ACCENT	55	12	☐	☒	660
FA1	4' STRIP	3	31	☐	☒	93
FA1E	4' STRIP	4	31	☐	☒	124
FA2	4' STRIP	12	59	☐	☒	708
FA2E	4' STRIP	3	59	☐	☒	177
FA6	3' STRIP	1	22	☐	☒	22
FB1	ROUGH SERVICE	3	30	☐	☒	90
FC1	1X4 WRAP	4	59	☐	☒	236
FC1E	1X4 WRAP	5	59	☐	☒	295
FD1	PED. POLE	2	44	☐	☒	88
					SUBTOTAL FROM THIS PAGE	6093
					PLUS SUBTOTAL FROM CONTINUATION PAGE	0
					PORTABLE LIGHTING (From LTG-1 Part 3 of 3)	
					LESS CONTROL CREDIT WATTS (FROM LTG-3)	
					ADJUSTED ACTUAL WATTS	continued

CERTIFICATE OF COMPLIANCE (Part 1 of 3) — LTG-1

PROJECT NAME: DIABLO VALLEY COLLEGE BOOKSTORE		DATE: 12.05.03
PROJECT ADDRESS: 321 GOLF CLUB ROAD, PLEASANT HILL, CA		Building Permit
PRINCIPAL DESIGNER-LIGHTING: PIETER COLENBRANDER	TELEPHONE: 415.492.0420	Checked by/Date
DOCUMENTATION AUTHOR: PIETER COLENBRANDER	TELEPHONE: 415.492.0420	Enforcement Agency Use

GENERAL INFORMATION

DATE OF PLANS	BUILDING CONDITIONED FLOOR AREA	CLIMATE ZONE
12.05.03	13620	12

- BUILDING TYPE: [X] NONRESIDENTIAL [ ] HIGH RISE RESIDENTIAL [ ] HOTEL/MOTEL GUEST ROOM
- PHASE OF CONSTRUCTION: [X] NEW CONSTRUCTION [ ] ADDITION [ ] ALTERATION [ ] UNCONDITIONED (File Affidavit)
- METHOD OF LIGHTING COMPLIANCE: [X] COMPLETE BUILDING [ ] AREA CATEGORY [ ] TAILORED [ ] PERFORMANCE

STATEMENT OF COMPLIANCE

This Certificate of Compliance lists the building features and performance specifications needed to comply with Title 24, Parts 1 and 6 of the California Code of Regulations. This certificate applies only to building lighting requirements. The documentation preparer hereby certifies that the documentation is accurate and complete.

DOCUMENTATION AUTHOR: PIETER COLENBRANDER — SIGNATURE: [signature] — DATE: 12.05.03

The Principal Lighting Designer hereby certifies that the proposed building design represented in this set of construction documents is consistent with the other compliance forms and worksheets, with the specifications, and with any other calculations submitted with this permit application. The proposed building has been designed to meet the lighting requirements contained in the applicable parts of Sections 110, 119, 130 through 132, 146, and 149 of Title 24, Part 6.

Please check one:

- [X] I hereby affirm that I am eligible under the provisions of Division 3 of the Business and Professions Code to sign this document as the person responsible for its preparation; and that I am licensed in the State of California as a civil engineer or electrical engineer, or I am a licensed architect.
- [ ] I affirm that I am eligible under the provisions of Division 3 of the Business and Professions Code by section 5537.2 or 6737.3 to sign this document as the person responsible for its preparation; and that I am a licensed contractor performing this work.
- [ ] I affirm that I am eligible under Division 3 of the Business and Professions Code to sign this document because it pertains to a structure or type of work described as exempt pursuant to Business and Professions Code Sections 5537, 5538, and 6737.1.

(These sections of the Business and Professions Code are printed in full in the Nonresidential Manual.)

PRINCIPAL LIGHTING DESIGNER-NAME: PIETER COLENBRANDER — SIGNATURE: [signature] — DATE: 12.05.03 — LIC. #: 14738

LIGHTING MANDATORY MEASURES

Indicate location on plans of Note Block for Mandatory Measures: E0.3

INSTRUCTIONS TO APPLICANT

For detailed instructions on the use of this and all Energy Efficiency Standards compliance forms, please refer to the Nonresidential Manual published by the California Energy Commission.
LTG-1: Required on plans for all submittals. Part 2 and 3 may be incorporated in schedules on plans.
LTG-2: Required for all submittals.
LTG-3: Optional. Use only if lighting control credits are taken.
LTG-4: Optional. Part 2 and 3 and LTG-5 are optional if Tailored Method is used.

Nonresidential Compliance Form — January 2001

CERTIFICATE OF COMPLIANCE (Part 2 of 3) — LTG-1

PROJECT NAME: DIABLO VALLEY COLLEGE BOOKSTORE — DATE: 12.05.03

INSTALLED LIGHTING SCHEDULE

NAME	LUMINAIRE DESCRIPTION	LAMPS TYPE DESCRIPTION	LAMPS QTY.	LAMPS WATTS PER LAMP	BALLASTS TYPE DESCRIPTION	BALLASTS QTY.	LUMINAIRE QTY.	LUMINAIRE WATTS/LUMIN.	TOTAL WATTS
A1	NONE	NONE	0	0	NONE	0	80LF	45/LF	3600
B1	Incandescent	INCLUDED	6	2	REMOTE	0	55	12	660
FA1	Fluorescent	F32T8/830	1	32	Electronic	1	3	31	93
FA1E	Fluorescent	F32T8/830	1	32	Electronic	1	4	31	124
FA2	Fluorescent	F32T8/830	2	32	Electronic	1	12	59	708
FA2E	Fluorescent	F32T8/830	2	32	Electronic	1	3	59	177
FA6	Fluorescent	F25T8/830	1	25	Electronic	1	1	22	22
FB1	Fluorescent	F28PLC/830	1	28	HPF	1	3	30	90
FC1	Fluorescent	F32T8/830	2	32	Electronic	1	4	59	236
FC1E	Fluorescent	F32T8/830	2	32	Electronic	1	5	59	295
FD1	Fluorescent	CFTR42/830	1	42	Electronic	1	2	44	88
								SUBTOTAL FROM THIS PAGE	6093
								PLUS SUBTOTAL FROM CONTINUATION PAGE	0
								PORTABLE LIGHTING (From LTG-1 Part 3 of 3)	
								LESS CONTROL CREDIT WATTS (From LTG-3)	
								ADJUSTED ACTUAL WATTS	continued

Lighting Schedule on Plans Shows Exterior Lighting Meets
- [X] Efficacy and Control Requirements of § 130(c)
- [X] Control Requirements of § 131(f)

MANDATORY AUTOMATIC CONTROLS

CONTROL LOCATION (Room #)	CONTROL IDENTIFICATION	CONTROL TYPE (Auto Time Switch, Exterior, etc.)	SPACE CONTROLLED	NOTE TO FIELD
ELECTRICAL ROOM	LCP1	Autotime switch	WHOLE BUILDING	

CERTIFICATE OF COMPLIANCE (Part 2 of 3) — LTG-1

PROJECT NAME: DIABLO VALLEY COLLEGE BOOKSTORE — DATE: 12.05.03

INSTALLED LIGHTING SCHEDULE

NAME	LUMINAIRE DESCRIPTION	LAMPS TYPE DESCRIPTION	LAMPS QTY.	LAMPS WATTS PER LAMP	BALLASTS TYPE DESCRIPTION	BALLASTS QTY.	LUMINAIRE QTY.	LUMINAIRE WATTS/LUMIN.	TOTAL WATTS
FE1	Fluorescent	CFTR32/830	1	32	Electronic	1	1	34	34
FE1A	Fluorescent	CFTR32/830	1	32	Electronic	1	2	34	68
FE2	Fluorescent	CFTR32/830	1	32	Electronic	1	8	34	272
FE4A	Fluorescent	CFTR32/830	1	32	Electronic	1	5	34	170
FF1	Fluorescent	F32T8/830	1	32	Electronic	1	5	31	155
FF2E	Fluorescent	F32T8/830	2	32	Electronic	1	5	59	295
FF3	Fluorescent	F25T8/830	4	25	Electronic	1	1	88	88
FF4	Fluorescent	F25T8/830	2	25	Electronic	1	2	44	88
FF5	Fluorescent	F32T8/830	2	32	Electronic	1	2	59	118
FG1	Fluorescent	F32T8/830	3	32	Electronic	1	28	90	2520
FG2	Fluorescent	F32T8/830	2	32	Electronic	1	97	59	5723
								SUBTOTAL FROM THIS PAGE	9531
								PLUS SUBTOTAL FROM CONTINUATION PAGE	6093
								PORTABLE LIGHTING (From LTG-1 Part 3 of 3)	
								LESS CONTROL CREDIT WATTS (From LTG-3)	
								ADJUSTED ACTUAL WATTS	continued

Lighting Schedule on Plans Shows Exterior Lighting Meets
- [ ] Efficacy and Control Requirements of § 130(c)
- [ ] Control Requirements of § 131(f)

O'MAHONY & MYER
ELECTRICAL and LIGHTING DESIGN
4340 REDWOOD HWY, SUITE 245
SAN RAFAEL, CALIFORNIA 94903
(415) 492-0420/FAX (415) 479-9662
www.ommconsulting.com

DIABLO VALLEY COLLEGE

DIABLO VALLEY COLLEGE NEW BOOKSTORE

321 GOLF CLUB RD.
PLEASANT HILL, CALIFORNIA

REGISTERED PROFESSIONAL ENGINEER — PIETER J. COLENBRANDER — No.14738 — Exp. 6/07 — ELECTRICAL — STATE OF CALIFORNIA

DATE: 23 JULY, 2004

REVISIONS:

BID SET

SHEET TITLE:

TITLE 24 DOCUMENTATION

IDENTIFICATION STAMP
DIVISION OF THE STATE ARCHITECT
APPL 01 105925
AC LE FLS EO SS AI
DATE: 5-12-04 JUL 2 6 2004

BLDG. ID: 098

ID CODE: 312098-109.01-A

DRAWN BY:

CHECKED BY: PC

JOB NO: 203066

SHEET E0.3

DIABLO_VALLEY_COLLEGE_BOOKSTORE-203066

Jul 20, 2004 - 10:53am jkirk P:\2003\DIABLO_VALLEY_COLLEGE_BOOKSTORE-203066\CAD\E11-DVC_BOOKSTORE.DWG

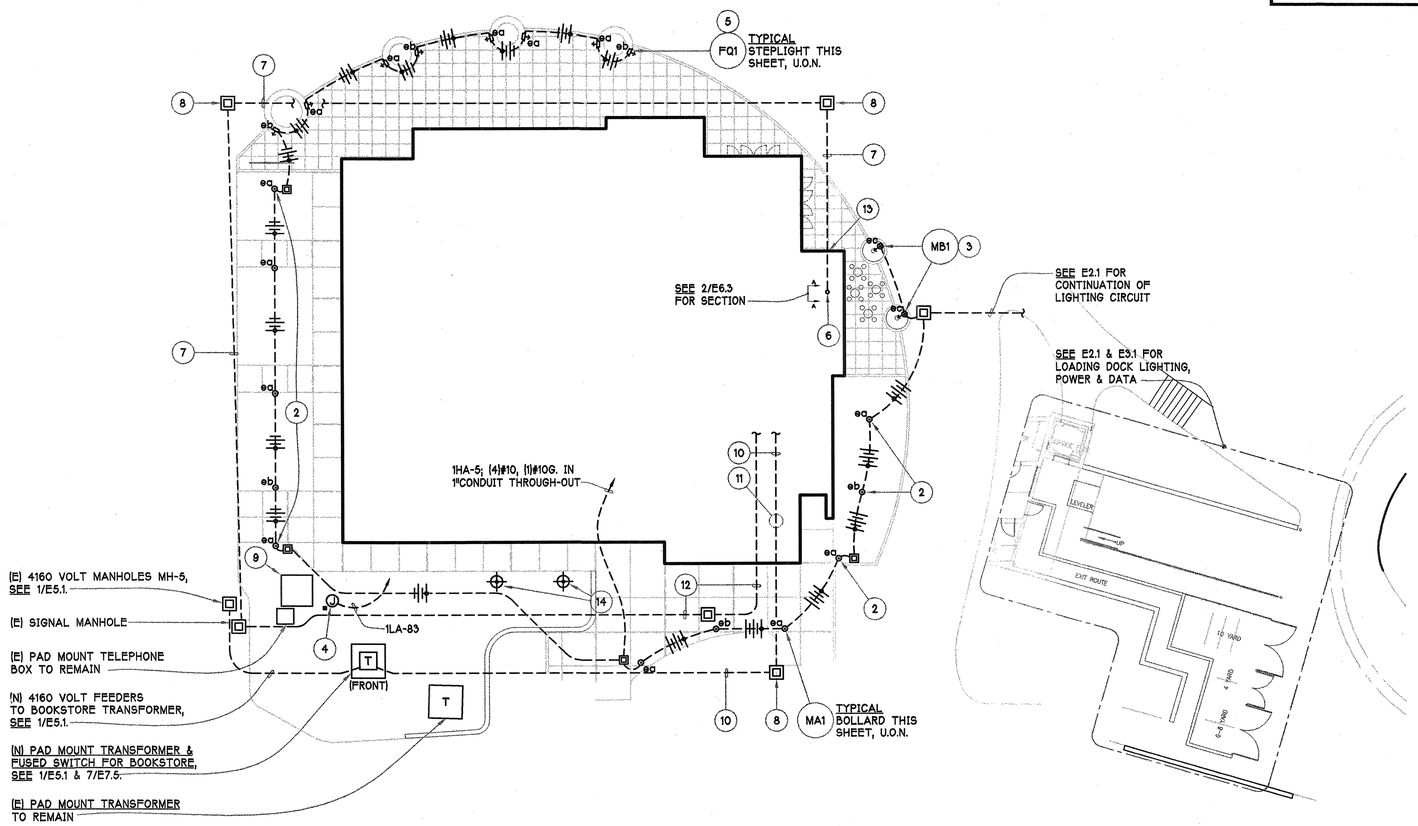

SITE PLAN - ELECTRICAL AND LIGHTING

SCALE: 1/16" = 1'-0"
FILE: ... xplan-1 (07-19-04) + xLDplan + xSite + xRHAABASE (04-20-04)

1 / E1.1

REF. NORTH

NUMBERED SHEET NOTES

1. SEE DETAIL 5/E7.3
2. SEE DETAIL 6/E7.3
3. SEE DETAIL 7/E7.3
4. PROVIDE AND INSTALL 120V CIRCUIT FOR IRRIGATION CONTROLLER AND REMOTE CONTROL VALVES. VERIFY LOCATION AND REQUIREMENTS WITH LANDSCAPE ARCHITECT.
5. RECESSED STEPLIGHT IN SEAT WALL AT 18" A.F.F.
6. CONDUITS TO RISE UP IN THE BATHROOM WALL TO THE SERVER ROOM ON THE SECOND FLOOR, SEE 1/E63.
7. PROVIDE AND INSTALL THE FOLLOWING UNDERGROUND TELEPHONE/DATA/SIGNAL CONDUITS TO THE SERVER ROOM:
   - (2) 4" CONDUITS WITH PULLROPES AND INNER DUCT, SEE 4/E5.3;
   - (3) 2" CONDUITS WITH PULLROPES.
8. PROVIDE AND INSTALL PULLBOXES WITH FULL TRAFFIC COVERS AS REQUIRED. CHRISTY #N36 OR EQUAL.
9. (E) 4160VOLT PAD MOUNT SECTIONALIZING SWITCH - SEE 1/E5.1.
10. PROVIDE AND INSTALL NEW SECONDARY FEEDERS TO THE NEW BOOKSTORE MAIN SWITCHBOARD - SEE 1/E5.1.
11. SEE 1/E3.1 FOR CONDUIT ENTRY INTO BASEMENT FLOOR.
12. PROVIDE AND INSTALL 1" CONDUIT TO MAIN ELECTRICAL ROOM FOR FUTURE USE.
13. INSTALL CONDUITS BELOW THE BUILDING FOOTINGS, SEE STRUCTURAL DRAWINGS.
14. GROUND RODS, SEE 1/E5.1 & 1/E7.2

NOTES: PREPARE SHOP DRAWINGS SHOWING ALL CONDUIT ROUTING. SUBMIT FOR APPROVAL PRIOR TO ROUGH IN.

O'MAHONY & MYER
ELECTRICAL and LIGHTING DESIGN
4340 REDWOOD HWY., SUITE 245
SAN RAFAEL, CALIFORNIA 94903
(415) 492-0420/FAX (415) 479-9662
www.ommconsulting.com

DIABLO VALLEY COLLEGE

DIABLO VALLEY COLLEGE NEW BOOKSTORE

321 GOLF CLUB RD.
PLEASANT HILL, CALIFORNIA

REGISTERED PROFESSIONAL ENGINEER
PETER J. COLENBRANDER
No.14738
Exp. 6/07
ELECTRICAL
STATE OF CALIFORNIA

DATE: 23 JULY, 2004

REVISIONS:

BID SET

SHEET TITLE:

SITE PLAN ELECTRICAL AND LIGHTING

IDENTIFICATION STAMP
DIVISION OF THE STATE ARCHITECT
105925
APPL 01
AC LE FLS EO SS A1
DATE: 5-12-04 JUL 26 2004

BLDG. ID: 098
ID CODE: 312098-109.01-A

DRAWN BY:
CHECKED BY: PC
JOB NO: 203066

SHEET E1.1

DIABLO_VALLEY_COLLEGE_BOOKSTORE-203066

Jul 20, 2004 - 9:52am tvessels P:\2003\DIABLO_VALLEY_COLLEGE_BOOKSTORE-203066\CAD\E21-DVC_BOOKSTORE.DWG

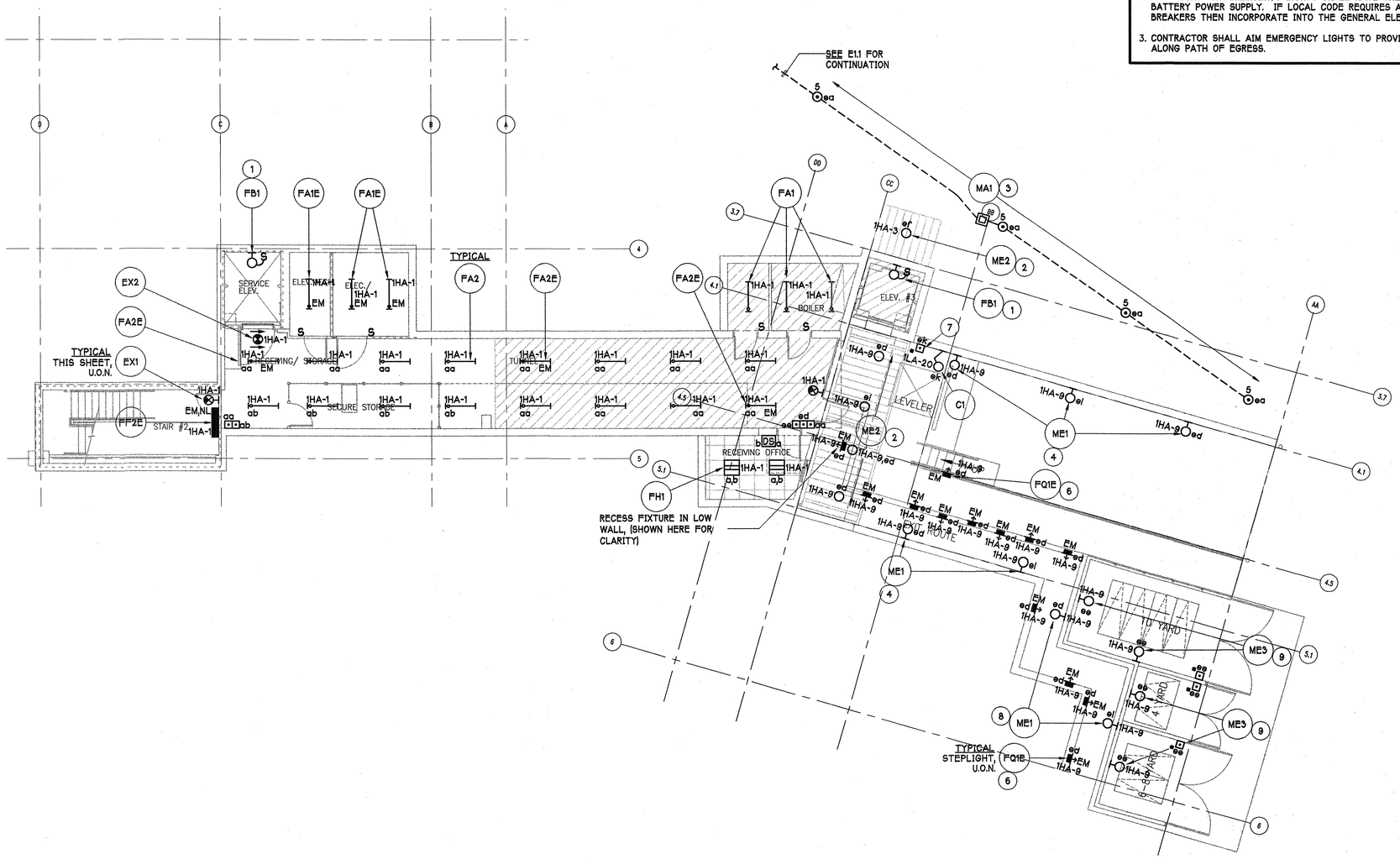

BASEMENT FLOOR PLAN - LIGHTING

SCALE: 1/8" = 1'-0"
FILE: ... Xref\Xplan-0 (07-09-04) + LDplan (04-20-04)

NUMBERED SHEET NOTES

1. COORDINATE LOCATION WITH LIFT/ELEVATOR CONTRACTOR - SEE E3.1 FOR CIRCUITING.
2. MOUNTED TO UNDERSIDE OF CANOPY - SEE DETAIL 8/E7.3.
3. SEE DETAIL 6/E7.3.
4. WALL SEMI-RECESSED AT 6'-0" ABOVE LOADING PLATFORM.
5. WALL SEMI-RECESSED AT 7'-6" A.F.F.
6. WALL RECESSED AT 24" A.F.F.
7. LABEL SWITCH "LOADING DOCK LIGHT".
8. WALL SEMI-RECESSED AT 5'-0" A.F.F. VERIFY LOCATION WITH ARCHITECT.
9. SURFACE MOUNTED ON WALL AT 5'-0" A.F.F.

GENERAL NOTES

1. ALL WORK SHOWN SHALL COMPLY WITH ALL NATIONAL, STATE AND LOCAL CODES, ORDINANCES, ETC.
2. EXIT SIGNS AND EMERGENCY LIGHTS SHALL HAVE THEIR OWN SELF-CONTAINED STANDBY BATTERY POWER SUPPLY. IF LOCAL CODE REQUIRES A DIRECT TAP BEFORE ANY CIRCUIT BREAKERS THEN INCORPORATE INTO THE GENERAL ELECTRICAL RISER DIAGRAM.
3. CONTRACTOR SHALL AIM EMERGENCY LIGHTS TO PROVIDE AN AVERAGE OF ONE-FOOT-CANDLE ALONG PATH OF EGRESS.

NOTES: PREPARE SHOP DRAWINGS SHOWING ALL CONDUIT ROUTING. SUBMIT FOR APPROVAL PRIOR TO ROUGH IN.

O'MAHONY & MYER
ELECTRICAL and LIGHTING DESIGN
4340 REDWOOD HWY., SUITE 245
SAN RAFAEL, CALIFORNIA 94903
(415) 492-0420/FAX (415) 479-9662
www.ommconsulting.com

DIABLO VALLEY COLLEGE

DIABLO VALLEY COLLEGE NEW BOOKSTORE

321 GOLF CLUB RD.
PLEASANT HILL, CALIFORNIA

REGISTERED PROFESSIONAL ENGINEER
PIETER J. COLENBRANDER
No. 14738
Exp. 6/07
ELECTRICAL
STATE OF CALIFORNIA

DATE: 23 JULY, 2004

REVISIONS:

BID SET

SHEET TITLE:

BASEMENT FLOOR PLAN-LIGHTING

IDENTIFICATION STAMP
DIVISION OF THE STATE ARCHITECT
105925
APPL 01
AC LE FLS EO SS AI
DATE: 5-12-04 JUL 26 2004

BLDG. ID: 098
ID CODE: 312098-109.01-A

DRAWN BY:
CHECKED BY: PC
JOB NO: 203066

SHEET E2.1

DIABLO_VALLEY_COLLEGE_BOOKSTORE-203066

Jul 20, 2004 - 9:53am tvessels P:\2003\DIABLO_VALLEY_COLLEGE_BOOKSTORE-203066\CAD\E22-DVC_BOOKSTORE.DWG

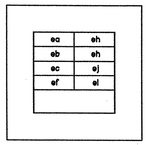

ML2			
Switch - Button	Label	Switch - Button	Label
ea	SITE BOLLARDS	eg	ENTRY CANOPY DOWNLIGHTS
eb	SITE BOLLARDS	eh	ENTRY CANOPY UPLIGHTS
ec	TREE UPLIGHTS	ej	FACADE UPLIGHTS
ef	EXTERIOR CANOPIES	el	SECURITY DOCKLIGHTS
MASTER EXTERIOR LIGHTS ON/OFF (ea, eb, ec, ef, eg, eh, ej, el)			

MASTER LIGHTING CONTROLS 'ML2'

SCALE: NONE

3 / E2.2

NUMBERED SHEET NOTES

(22) REMOTE LOW VOLTAGE TRANSFORMER IN ACCESSIBLE LOCATION. COORDINATE EXACT LOCATION WITH THE STORE FIXTURE VENDOR.

(23) OVERALL HANG HEIGHT IS 6" LESS THAN ADJACENT PENDANTS TO ACCOMODATE CHANGE IN CEILING HEIGHT.

(24) WALL MOUNTED AT 8'-6" A.F.F.

NUMBERED SHEET NOTES

(1) LIGHTING BY COOLER VENDOR. VERIFY EXACT ELECTRICAL REQUIREMENTS WITH MANUFACTURER AND CONNECT COMPLETE TO PANEL 1LA.

(2) OPEN TO ABOVE. SEE E2.3 FOR LIGHTING IN THIS AREA.

(3) TRACK MOUNTED TO COLUMN. SEE DETAIL 9/E7.3 AND REFER TO A9.7.

(4) TRACKHEAD. PROVIDE (12) PER COLUMN.

(5) WALL MOUNTED DISPLAY ACCENT. PROVIDE ADDITIONAL BLOCKING IN WALL FOR FIXTURE SUPPORT. SEE DETAIL 1/E7.4.

(6) INTERNALLY ILLUMINATED DISPLAY CABINETS BY STORE FIXTURE VENDOR. VERIFY EXACT POWER REQUIREMENTS AND CONNECTION LOCATIONS. CONNECT COMPLETE TO PANEL 1LA VIA 'LVRCA'.

(7) UNDER DESK NOSING ACCENT. SEE DETAIL 2/E7.4.

(8) MOUNTED TO UNDERSIDE OF CANOPY. SEE DETAIL 8/E7.3.

(9) WALL MOUNTED AT 7'-6" A.F.F.

(10) WALL MOUNTED UPLIGHT AT 8'-6" A.F.F.

(11) WALL MOUNTED AT 7'-6" A.F.F.

(12) PENDANT MOUNTED AT 7'-3" TO BOTTOM OF FIXTURE.

(13) SURFACE MOUNTED TO UNDERSIDE OF BRIDGE.

(14) COORDINATE LOCATION WITH LIFT/ELEVATOR VENDOR.

(15) PENDANT MOUNTED AT 10'-0" A.F.F.

(16) CUSTOM CASEWORK BUILT AROUND POLE FIXTURE

(17) SURFACE MOUNTED TO CEILING AND PAINTED TO MATCH ADJACENT SURFACES. VERIFY WITH THE ARCHITECT.

(18) COORDINATE LOCATION WITH LIFT/ELEVATOR CONTRACTOR. SEE E3.2 FOR CIRCUITING.

(19) MOUNT FIXTURE +9'-6" A.F.F. TO CENTER OF FIXTURE.

(20) PENDANT MOUNTED AT 9'-0" TO BOTTOM OF FIXTURE.

(21) MONOPOINT MOUNTED AT 9'-6" TO BOTTOM OF FIXTURE.

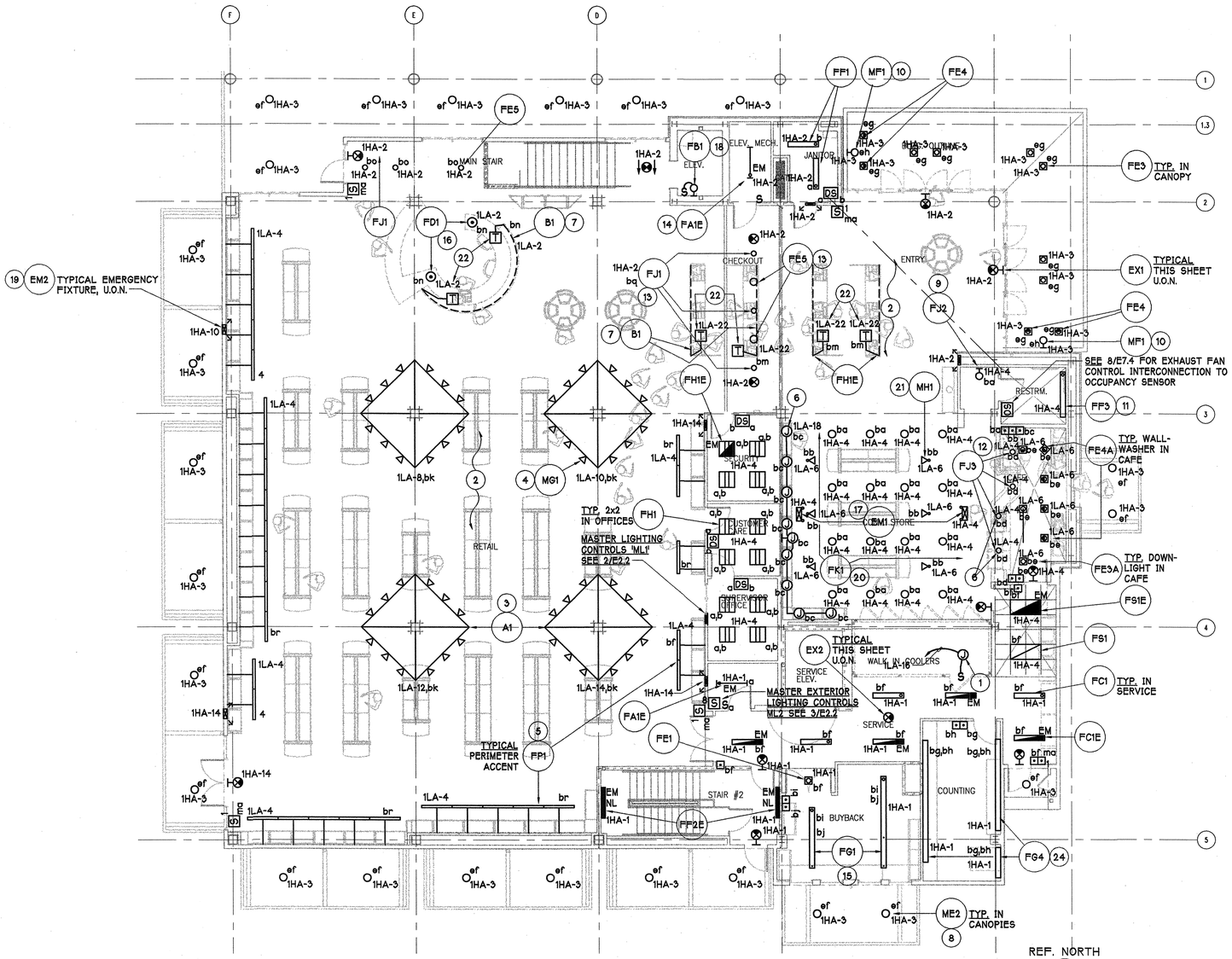

FIRST FLOOR PLAN - LIGHTING

SCALE: 1/8" = 1'-0"
FILE: ... Xplan-1 (07-19-04) + xStore1 (04-20-04)

1 / E2.2

ea	eh		
eb	ej		
ec	el		
ef			

ce	cy		
cf	cz		
cv	cr		
cw			

bk	bp		
bm	bq		
bn	cr		
bo	ML2		

ML1			
Switch - Button	Label	Switch - Button	Label
ca	ENTRY UPLIGHTS	db	ENTRY NL OFF
cb	ENTRY COVE	cu	NORTH SKYLIGHT
cc	ENTRY PENDANTS	ex	MIDDLE SKYLIGHT
cd	ENTRY PENDANTS	da	SOUTH SKYLIGHT
MASTER ENTRY ON/OFF (ca, cb, cc, cd)			

ML1			
Switch - Button	Label	Switch - Button	Label
ce	NORTH PENDANT	cy	SOUTH PENDANT
cf	NORTH PENDANT	cz	SOUTH PENDANT
cv	MIDDLE PENDANT	cr	CORRIDOR & BRIDGE
cw	MIDDLE PENDANT		
MASTER RETAIL PENDANTS & UPPER BRIDGE ON/OFF (ce, cf, cv, cw, cy, cz, cr)			

ML1			
Switch - Button	Label	Switch - Button	Label
bk	TRACK LIGHTS	bp	BRIDGE DOWLIGHTS
bm	CUSTOMER ACCENT	bq	BRIDGE PENDANTS
bn	CUSTOMER POLES	br	PERIMETER ACCENT
bo	BACK DOOR	ML2	EXTERIOR LIGHTS
MASTER RETAIL ACCENT/LOWER BRIDGE ON/OFF (bk, bm, bn, bo, bp, bq, br)			

MASTER LIGHTING CONTROLS 'ML1'

SCALE: NONE

2 / E2.2

NOTES: PREPARE SHOP DRAWINGS SHOWING ALL CONDUIT ROUTING. SUBMIT FOR APPROVAL PRIOR TO ROUGH IN.

O'MAHONY & MYER
ELECTRICAL and LIGHTING DESIGN
4340 REDWOOD HWY., SUITE 245
SAN RAFAEL, CALIFORNIA 94903
(415) 492-0420/FAX (415) 479-9662
www.ommconsulting.com

DIABLO VALLEY COLLEGE
NEW BOOKSTORE

321 GOLF CLUB RD.
PLEASANT HILL, CALIFORNIA

REGISTERED PROFESSIONAL ENGINEER
PETER C. COLLIGAN
No.14738
Exp. 6/07
ELECTRICAL
STATE OF CALIFORNIA

DATE: 23 JULY, 2004

REVISIONS:

BID SET

SHEET TITLE:
FIRST FLOOR PLAN-LIGHTING

IDENTIFICATION STAMP
DIVISION OF THE STATE ARCHITECT
105925
APPL 01
AC LE FLS EO SS A1
DATE: 5-12-04 JUL 20 2004

BLDG. ID: 098
ID CODE: 312098-109.01-A

DRAWN BY:
CHECKED BY: PC
JOB NO: 203066

SHEET
E2.2

DIABLO_VALLEY_COLLEGE_BOOKSTORE-203066

Jul 20, 2004 - 9:53am tvessels P:\2003\DIABLO_VALLEY_COLLEGE_BOOKSTORE-203066 \CADIE23-DVC_BOOKSTORE.DWG

NUMBERED SHEET NOTES

1. MOUNTED ON STRUCTURAL BEAM. SEE 2/E2.3.
2. MOUNTED ABOVE ROOF TO UPLIGHT FACADE WALL. SEE DETAIL 3/E7.4.
3. MOUNTED IN ARCHITECTURAL COVE. S.A.D.
4. SURFACE MOUNTED TO UNDERSIDE OF ROOF DECK.
5. WALL MOUNTED AT 7'-6" A.F.F.
6. WALL MOUNTED AT 7'-6" A.F.F.
7. PENDANT MOUNTED AT 21'-0" A.F.F. ALIGN BOTTOM OF FIXTURE WITH BOTTOM OF COVE SOFFIT. SUPPORT CABLES INSTALLED AT 15 DEGREE ANGLE OFF NADIR TOWARDS OUTSIDE OF SQUARE PATTERN TO PREVENT SWAY.
8. PENDANT MOUNTED AT 10'-6" A.F.F.
9. UNDERCABINET FIXTURE. SEE DETAIL 4/E7.4.
10. SURFACE MOUNTED ON SIDE OF SKYLIGHT WELL. CONCEAL CONDUIT ALONG STRUCTURAL MEMBERS AS INCONSPICUOUSLY AS POSSIBLE. SEE SPECIFICATION SECTION 16050, ARTICLE 2.2.

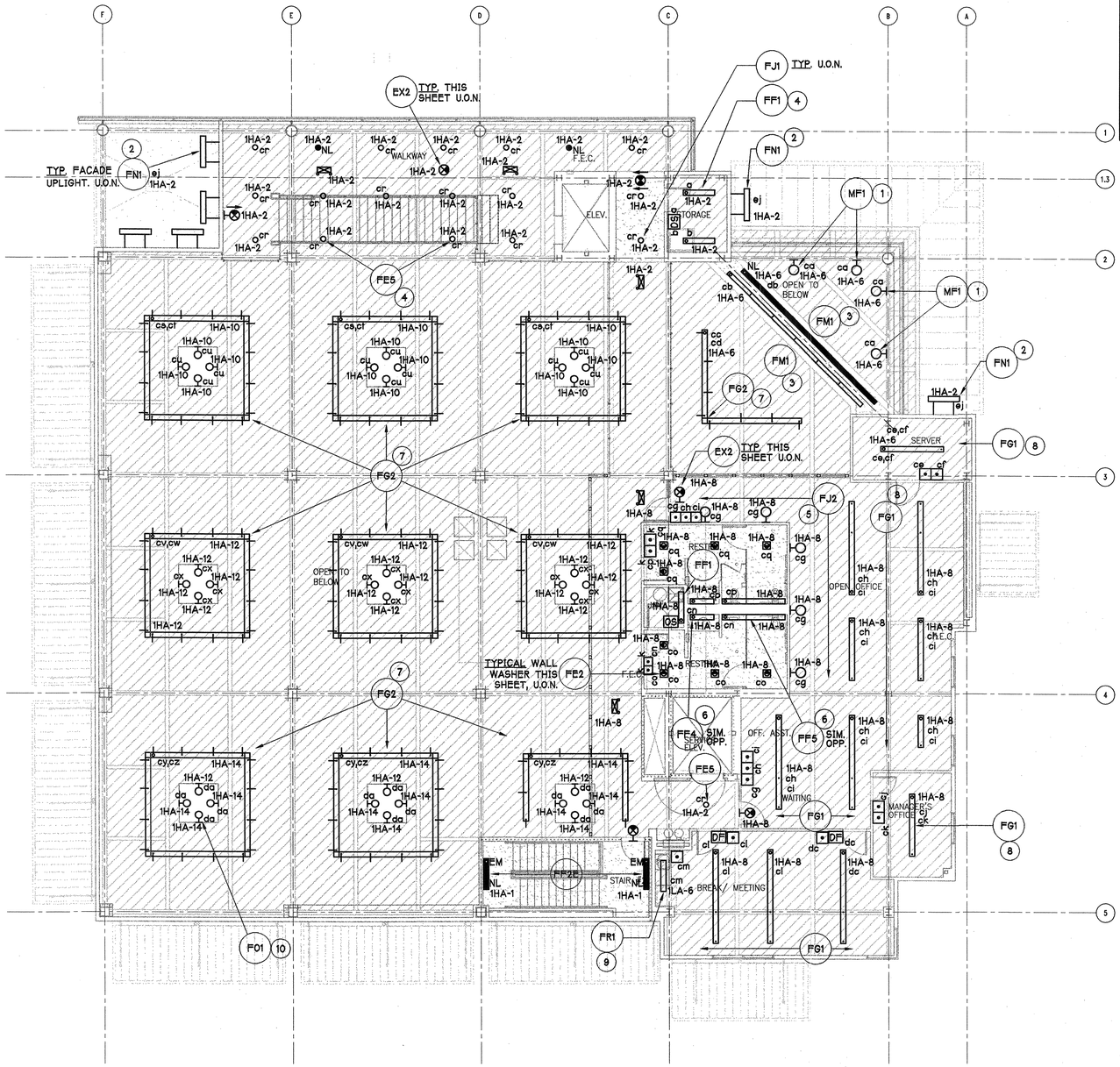

SECOND FLOOR PLAN - LIGHTING

SCALE: 1/8" = 1'-0"
FILE: ... Xplan-2 (07-19-04)

1 / E2.3

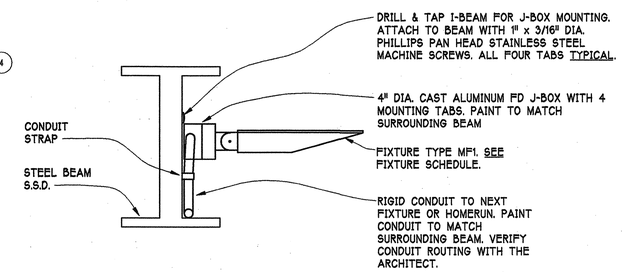

MF1 MOUNTING AT ENTRY

SCALE: NONE

2 / E2.3

NOTES: PREPARE SHOP DRAWINGS SHOWING ALL CONDUIT ROUTING. SUBMIT FOR APPROVAL PRIOR TO ROUGH IN.

O'MAHONY & MYER
ELECTRICAL and LIGHTING DESIGN
4340 REDWOOD HWY., SUITE 245
SAN RAFAEL, CALIFORNIA 94903
(415) 492-0420/FAX (415) 479-9662
www.ommconsulting.com

DIABLO VALLEY COLLEGE
NEW BOOKSTORE

321 GOLF CLUB RD.
PLEASANT HILL, CALIFORNIA

REGISTERED PROFESSIONAL ENGINEER
No. 14738
Exp. 6/07
ELECTRICAL
STATE OF CALIFORNIA

DATE: 23 JULY, 2004

REVISIONS:

BID SET

SHEET TITLE:
SECOND FLOOR PLAN-LIGHTING

IDENTIFICATION STAMP
DIVISION OF THE STATE ARCHITECT
105925
APPL 01
AC LE FLS EO SS A1
DATE: 5-12-04 JUL 26 2004

BLDG. ID: 098
ID CODE: 312098-109.01-A
DRAWN BY:
CHECKED BY: PC
JOB NO: 203066
SHEET E2.3

DIABLO_VALLEY_COLLEGE_BOOKSTORE-203066

Jul 23, 2004 - 12:10pm tvessels P:\2003\DIABLO_VALLEY_COLLEGE_BOOKSTORE-203066\CAD\E31-DVC_BOOKSTORE.DWG

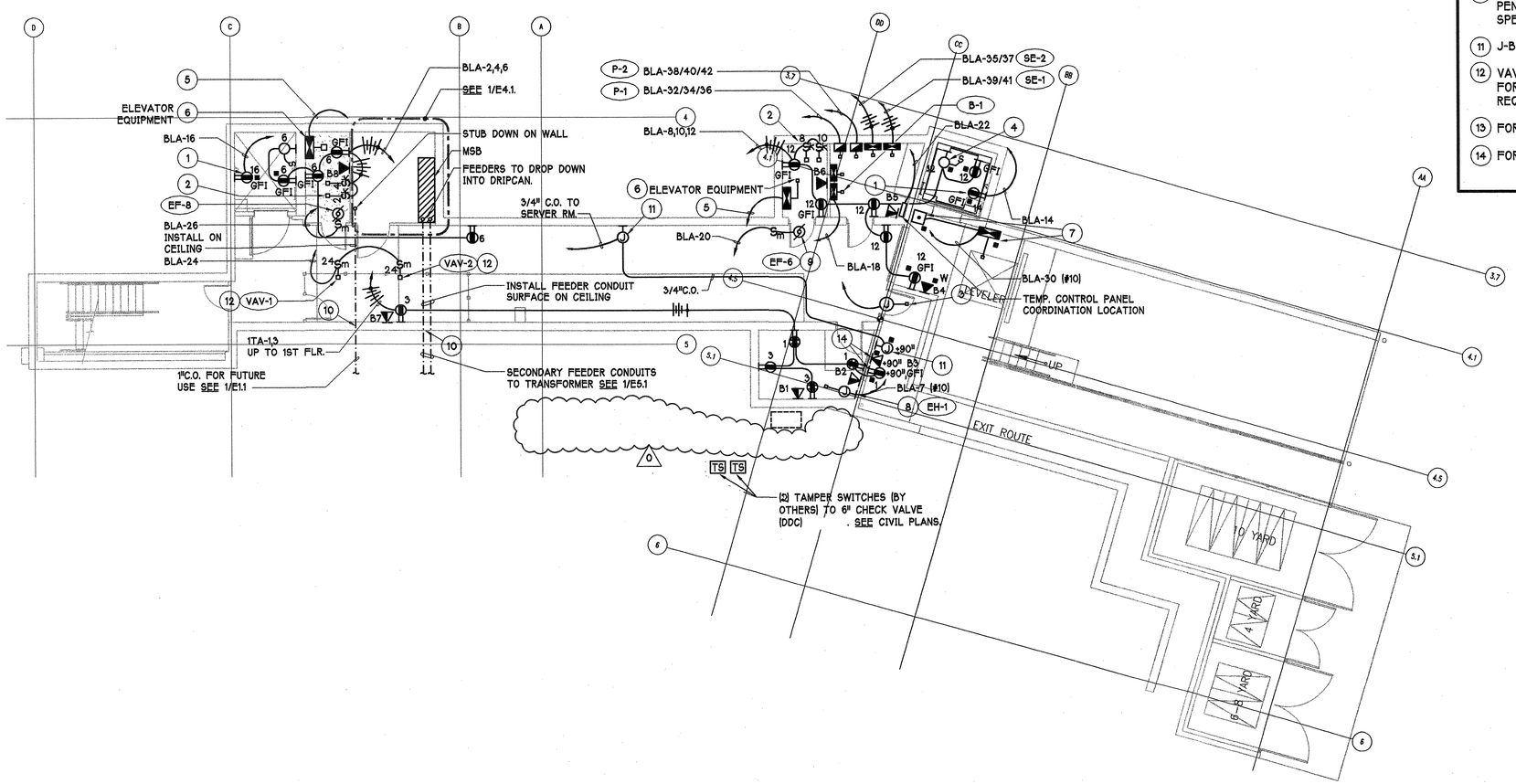

BASEMENT FLOOR PLAN - POWER & SIGNAL

SCALE: 1/8" = 1'-0"
FILE: ... Xref\Xplan-0 (07-19-04) + LDplan (04-20-04)

1 / E3.1

REF. NORTH

NUMBERED SHEET NOTES

1. OUTLET FOR SUMP PUMP. VERIFY LOCATION AND REQUIREMENTS PRIOR TO ROUGH-IN.
2. 120VOLT CIRCUITS FOR ELEVATOR CAB LIGHTS AND CONTROLS.
3. J-BOX FOR SECURITY DOOR CONTACT. PROVIDE AND INSTALL CONDUIT WITH PULL WIRE TO SECURITY PANEL.
4. PIT LIGHT FIXTURE. VERIFY DEVICE LOCATIONS AND REQUIREMENTS PRIOR TO ROUGH-IN.
5. TO MAIN SWITCHBOARD 'MSB'. SEE SINGLE LINE DIAGRAM 1/E5.1.
6. ELEVATOR. PROVIDE AND INSTALL FUSED DISCONNECT FOR ELEVATOR MOTOR AND TWO KEYED SWITCHES, ONE LABELED 'ELEVATOR CONTROLS' AND THE OTHER 'ELEVATOR CAB LIGHTS'. CONNECT COMPLETE. PROVIDE AND INSTALL TELEPHONE AND FIRE ALARM CONNECTIONS COMPLETE. VERIFY LOCATIONS AND FULL REQUIREMENTS WITH EQUIPMENT VENDOR PRIOR TO ROUGH-IN.
7. DOCK LEVELER. PROVIDE AND INSTALL PUSH BUTTON CONTROL & FUSED DISCONNECT. CONNECT COMPLETE. VERIFY LOCATIONS & FULL REQUIREMENTS WITH VENDOR PRIOR TO ROUGH-IN.
8. ELECTRIC HEATER (1500W, 120V). CONNECT COMPLETE. VERIFY LOCATION & REQUIREMENTS PRIOR TO ROUGH-IN.
9. PROVIDE & INSTALL CONDUIT & WIRE FOR LINE VOLTAGE THERMOSTAT (BY DIVISION 15). CONNECT COMPLETE. VERIFY LOCATION & REQUIREMENTS PRIOR TO ROUGH-IN.
10. MAINTAIN 6" SEPARATION BETWEEN CONDUITS AS THEY PENETRATE WALL. PROVIDE END CONDUIT SEALS, SEE SPECIFICATION 16050.
11. J-BOX FOR P.A. SPEAKER.
12. VAV BOX - PROVIDE AND INSTALL TOGGLE SWITCH DISCONNECT FOR EACH UNIT. CONNECT COMPLETE. COORDINATE LOCATION AND REQUIREMENTS WITH DIVISION 15.
13. FOR REMOTE METERING USE.
14. FOR WIRELESS DATA USE.

NOTES:
1. DEDICATED NEUTRALS REQUIRED FOR ALL BRANCH CIRCUITS TO PANELS WITH TVSS UNITS. ALL RECEPTACLE PLATES TO HAVE LABELS INDICATING THE CIRCUIT NUMBER.
2. SEE TEL/DATA SCHEDULES FOR OUTLET REQUIREMENTS AND CAT. 6 HOME RUN QUANTITIES FROM EACH OUTLET.

O'MAHONY & MYER
ELECTRICAL and LIGHTING DESIGN
4340 REDWOOD HWY., SUITE 245
SAN RAFAEL, CALIFORNIA 94903
(415) 492-0420/FAX (415) 479-9662
www.omm consulting.com

DIABLO VALLEY COLLEGE

DIABLO VALLEY COLLEGE NEW BOOKSTORE

321 GOLF CLUB RD.
PLEASANT HILL, CALIFORNIA

REGISTERED PROFESSIONAL ENGINEER
PETER CHRISTIAN VANDER
No.14738
Exp. 6/07
ELECTRICAL
STATE OF CALIFORNIA

DATE: 23 JULY, 2004

REVISIONS:
0 REVISIONS- 23 JULY, 2004

BID SET

SHEET TITLE:
BASEMENT FLOOR PLAN – POWER & SIGNAL

IDENTIFICATION STAMP
DIVISION OF THE STATE ARCHITECT
105925
APPL 01
AC LE FLS ED SS AM
DATE: 5-12-04 JUL 26 2004

BLDG. ID: 098
ID CODE: 312098-109.01-A

DRAWN BY:
CHECKED BY: PC
JOB NO: 203066

SHEET
E3.1

NUMBERED SHEET NOTES

(37) INTERLOCK WITH LIGHT SWITCH.

(38) COORDINATE THE EXACT LOCATIONS OF FLOOR BOXES WITH SHOP FITTING VENDOR. SUBMIT SHOP DRAWING FOR REVIEW INDICATING THE LOCATION OF FLOOR BOXES PRIOR TO RUGH-IN.

NUMBERED SHEET NOTES

(32) PROVIDE AND INSTALL TEL/DATA CONDUIT (1") AND WIRING BETWEEN OUTLET BOXES AS INDICATED. INSTALL THE CONDUIT UNDER THE SLAB.

(33) PROVIDE AND INSTALL A 1" CONDUIT WITH PULLWIRE TO THE SERVER ROOM FOR FUTURE TEL/DATA USE.

(34) SEE 8/E7.5.

(35) COORDINATE LOCATION WITH ARCHITECT PRIOR TO ROUGH-IN.

(36) FOR DRINKING FOUNTAIN. CONNECT COMPLETE. VERIFY LOCATION & EXACT REQUIEMENTS WITH VENDOR PRIOR TO ROUGH-IN.

NUMBERED SHEET NOTES

(28) PROVIDE AND INSTALL 3/4" CONDUIT WITH PULL WIRE TO THE SERVER ROOM FOR TV OUTLET USE, SEE 3/E7.1.

(29) INSTALL AT +96" A.F.F. COORDINATE LOCATION WITH ARCHITECT PRIOR TO ROUGH-IN.

(30) PROVIDE AND INSTALL A 1-1/4" CONDUIT WITH PULL WIRE TO SERVER ROOM FOR SECURITY USE.

(31) PROVIDE AND INSTALL TEL/DATA CONDUIT (1") AND WIRING TO THE SERVER ROOM VIA THE PULLBOXES IN THE JANITORS ROOM 104 AND STORAGE ROOM 207, SEE 8/E7.5. INSTALL THE CONDUIT UNDER THE SLAB TO THE PULLBOX IN THE JANITORS ROOM 104.

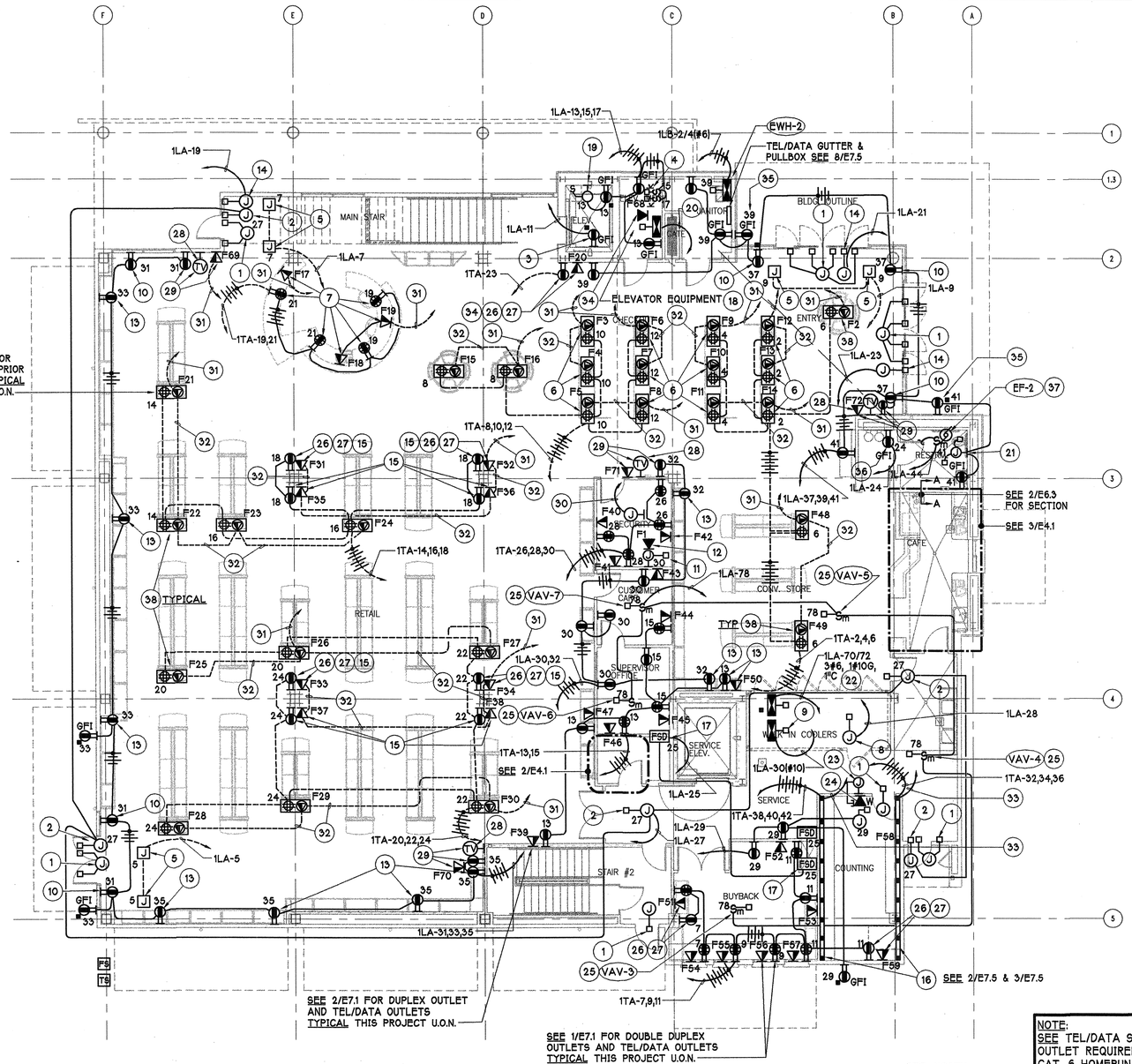

FIRST FLOOR PLAN - POWER & SIGNAL

SCALE: 1/8" = 1'-0"
FILE: ... Xplan-1 (07-19-04) + xStore1 (04-20-04)

1 / E3.2

NUMBERED SHEET NOTES

(1) J-BOX FOR SECURITY DOOR CONTACT. PROVIDE AND INSTALL CONDUIT AND PULL WIRE TO SECURITY PANEL.

(2) 120 VOLT CIRCUIT FOR LOCAL DOOR ALARM SOUNDER. COORDINATE LOCATION PRIOR TO ROUGH IN.

(3) OUTLET FOR SUMP PUMP. VERIFY LOCATION AND REQUIREMENTS PRIOR TO ROUGH-IN.

(4) 120 VOLT CIRCUITS FOR ELEVATOR CAB LIGHTS AND CONTROLS.

(5) POWER AND SIGNAL FLOOR BOX FOR THEFT DETECTION SYSTEM. COORDINATE LOCATION PRIOR TO ROUGH IN.

(6) INSTALL AT CHECK OUT FURNITURE. COORDINATE LOCATIONS PRIOR TO ROUGH IN.

(7) INSTALL ON FURNITURE. COORDINATE LOCATION PRIOR TO ROUGH IN. PROVIDE AND INSTALL CONDUIT AND WIRING BETWEEN OUTLETS ON THE FURNITURE. COORDINATE WITH FURNITURE VENDOR.

(8) CONNECT TO WALK-IN COOLER LIGHTS.

(9) COOLER EQUIPMENT, CONNECT COMPLETE.

(10) PROVIDE AND INSTALL OUTLET ABOVE DISPLAY WINDOWS. COORDINATE LOCATION PRIOR TO ROUGH IN.

(11) PROVIDE AND INSTALL 120 VOLT CIRCUIT FOR SECURITY PANEL. COORDINATE LOCATION PRIOR TO ROUGH IN.

(12) PROVIDE AND INSTALL TELEPHONE OUTLET FOR SECURITY PANEL.

(13) INSTALL AT HIGH LEVEL ABOVE THE SHOP FITTINGS.

(14) 120 VOLT CONNECTION FOR AUTOMATIC DOORS. PROVIDE AND INSTALL CONDUIT AND WIRING TO THE CONTROL SWITCHES, COORDINATE WITH VENDOR PRIOR TO ROUGH-IN.

(15) INSTALL SURFACE MOUNTED ON COLUMN. COORDINATE LOCATION PRIOR TO ROUGH-IN.

(16) PROVIDE AND INSTALL WIREMOLD G4000, OR EQUAL, AT 18" A.F.F. WITH 20 AMP DUPLEX OUTLETS & TELE/DATA ON 24" CENTERS. DIVIDE BRANCH CIRCUITS EQUALLY AMONG OUTLETS.

(17) FIRE/SMOKE DAMPER. PROVIDE AND INSTALL LINE VOLTAGE CONNECTIONS AND TOGGLE SWITCH DISCONNECT FOR DAMPER MOTOR. PROVIDE AND INSTALL FIRE ALARM CONNECTIONS COMPLETE - SEE 3/E5.2. DAMPER WITH INTEGRAL DUCT SMOKE DETECTOR, CONTROL OF DAMPER AND HVAC UNIT CONTROL BY DIVISION 15; LINE VOLTAGE CONNECTIONS AND FIRE ALARM CONNECTIONS/EQUIPMENT BY DIVISION 15.

(18) ELEVATOR. PROVIDE AND INSTALL FUSED DISCONNECT FOR ELEVATOR MOTOR AND TWO KEYED SWITCHES, ONE LABELED 'ELEVATOR CONTROLS' AND THE OTHER 'ELEVATOR CAB LIGHTS'. CONNECT COMPLETE. PROVIDE AND INSTALL TELEPHONE AND FIRE ALARM CONNECTIONS COMPLETE. VERIFY LOCATIONS AND FULL REQUIREMENTS WITH EQUIPMENT VENDOR PRIOR TO ROUGH-IN.

(19) PIT LIGHT FIXTURE. VERIFY DEVICE LOCATIONS AND REQUIREMENTS PRIOR TO ROUGH-IN.

(20) TO MAIN SWITCHBOARD 'MSB'. SEE SINGLE LINE DIAGRAM, 1/E5.1.

(21) 120 VOLT CIRCUIT FOR ELECTRIC FAUCETS AND FLUSH VALVES. CONNECT COMPLETE. VERIFY LOCATION AND FULL REQUIREMENTS WITH VENDOR PRIOR TO ROUGH-IN.

(22) FOR COOLER REMOTE REFRIGERATION RACK ON ROOF. CONNECT COMPLETE. VERIFY LOCATION AND FULL REQUIREMENTS WITH VENDOR PRIOR TO ROUGH-IN.

(23) J-BOX FOR DOOR KEY PAD WITH 1/2" CONDUIT STUBBED UP INTO CEILING SPACE.

(24) 120V CIRCUIT FOR DOOR KEY PAD POWER SUPPLY.

(25) VAV BOX. PROVIDE AND INSTALL TOGGLE SWITCH DISCONNECT FOR EACH UNIT. CONNECT COMPLETE. COORDINATE LOCATION AND REQUIREMENTS WITH DIVISION 15.

(26) FOR WIRELESS DATA USE.

(27) INSTALL AT 10'-0" A.F.F.

NOTE:
SEE TEL/DATA SCHEDULES FOR OUTLET REQUIREMENTS AND CAT. 6 HOMERUN QUANTITIES FROM EACH OUTLET.

NOTE:
DEDICATED NEUTRALS REQUIRED FOR ALL BRANCH CIRCUITS TO PANELS WITH TVSS UNITS. ALL RECEPTACLE PLATES TO HAVE LABELS INDICATING THE CIRCUIT NUMBER.

NOTES: PREPARE SHOP DRAWINGS SHOWING ALL CONDUIT ROUTING. SUBMIT FOR APPROVAL PRIOR TO ROUGH IN.

O'MAHONY & MYER
ELECTRICAL and LIGHTING DESIGN
4340 REDWOOD HWY., SUITE 245
SAN RAFAEL, CALIFORNIA 94903
(415) 492-0420/FAX (415) 479-9662
www.ommconsulting.com

DIABLO VALLEY COLLEGE
NEW BOOKSTORE

321 GOLF CLUB RD.
PLEASANT HILL, CALIFORNIA

REGISTERED PROFESSIONAL ENGINEER
PAUL J. COLPEMAKER
No. 14738
Exp. 6/07
ELECTRICAL
STATE OF CALIFORNIA

DATE: 23 JULY, 2004

REVISIONS:

BID SET

SHEET TITLE:
FIRST FLOOR PLAN – POWER & SIGNAL

IDENTIFICATION STAMP
DIVISION OF THE STATE ARCHITECT
105925
APPL 01
AC LE FLS EO SS A1
DATE: 5-12-04 JUL 2 0 2004

BLDG. ID: 098
ID CODE: 312098-109.01-A

DRAWN BY:
CHECKED BY: PC
JOB NO: 203066

SHEET
E3.2

DIABLO_VALLEY_COLLEGE_BOOKSTORE-203066
Jul 20, 2004 - 9:54am tvessels P:\2003\DIABLO_VALLEY_COLLEGE_BOOKSTORE-203066 \CADIE32-DVC_BOOKSTORE.DWG

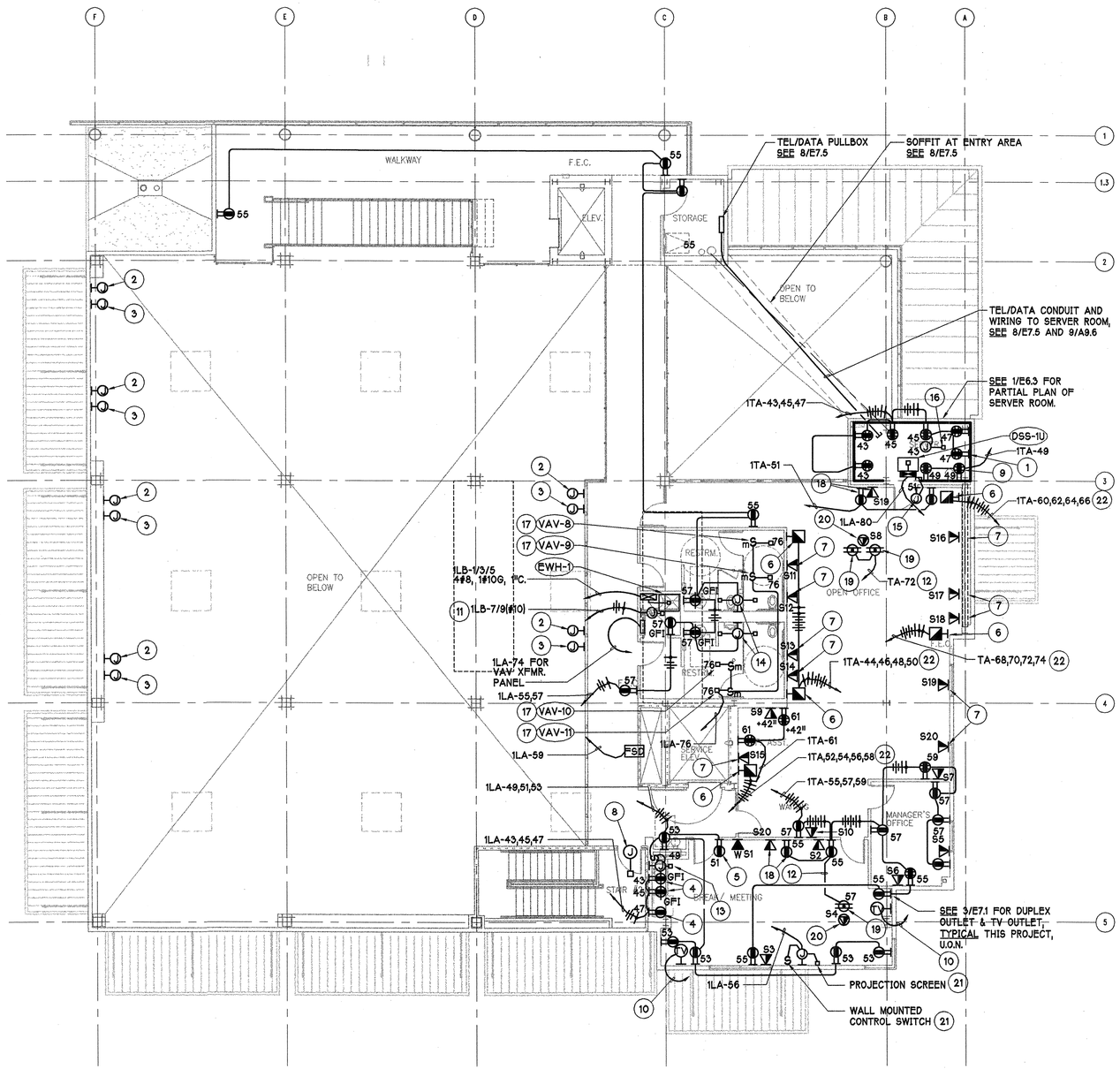

SECOND FLOOR PLAN - POWER & SIGNAL

SCALE: 1/8" = 1'-0"
FILE: ... Xplan-2 (07-19-04)

1 / E3.3

NUMBERED SHEET NOTES

1. PROVIDE AND INSTALL BACKBOARD IN SERVER ROOM. SEE 1/E6.3.
2. PROVIDE AND INSTALL J-BOX WITH A 3/4" CONDUIT HOMERUN TO ELECTRICAL ROOM. COORDINATE LOCATION PRIOR TO ROUGH-IN.
3. PROVIDE AND INSTALL J-BOX WITH A 1" CONDUIT HOMERUN TO SERVER ROOM. COORDINATE LOCATION PRIOR TO ROUGH-IN.
4. PROVIDE AND INSTALL AT BREAK AREA FOR MICROWAVE, REFRIGERATOR, AND COUNTER TOP RECEPTACLES. COORDINATE LOCATIONS PRIOR TO ROUGH IN.
5. VENDING MACHINES, VERIFY LOCATIONS PRIOR TO ROUGH IN.
6. FURNITURE POWER AND TEL/DATA CONNECTION POINT. COORDINATE LOCATIONS PRIOR TO ROUGH IN.
7. PROVIDE AND INSTALL TEL/DATA OUTLET ON FURNITURE, COORDINATE LOCATION PRIOR TO ROUGH-IN. TEL/DATA WIRING TO BE INSTALLED VIA RACEWAY WITHIN FURNITURE. PROVIDE AND INSTALL CONDUIT AND WIRING HOMERUN TO SERVER ROOM.
8. J-BOX FOR SECURITY DOOR CONTACT. PROVIDE AND INSTALL CONDUIT AND PULLWIRE TO SECURITY PANEL.
9. COORDINATE LOCATIONS THIS WALL TO AVOID CONFLICT WITH MECHANICAL & PLUMBING.
10. PROVIDE AND INSTALL 3/4" CONDUIT WITH PULLWIRE TO SERVER ROOM FOR TV OUTLET USE. SEE 3/E7.1.
11. FOR HEAT TRACE. VERIFY REQUIREMENTS AND LOCATION WITH VENDOR PRIOR TO ROUGH-IN.
12. CONDUITS TO BE INSTALLED ON THE CEILING OF THE FIRST FLOOR.
13. DISPOSAL, INSTALL & CONNECT COMPLETE. VERIFY LOCATION & REQUIREMENTS PRIOR TO ROUGH-IN.
14. 120 VOLT CIRCUIT FOR ELECTRIC FAUCET AND FLUSH VALVE CONNECT COMPLETE VERIFY LOCATION WITH EQUIPMENT VENDOR PRIOR TO ROUGH-IN.
15. J-BOX FOR DOOR KEY PAD WITH 1/2" CONDUIT STUBBED UP INTO CEILING SPACE.
16. 120 VOLT CIRCUIT FOR DOOR KEY PAD.
17. VAV BOX. PROVIDE AND INSTALL TOGGLE SWITCH DISCONNECT FOR EACH UNIT. CONNECT COMPLETE. COORDINATE LOCATION AND REQUIREMENTS WITH DIVISION 15.
18. FOR WIRELESS DATA USE, INSTALL AT 10'-0" A.F.F.
19. PROVIDE AND INSTALL FIRE RATED POKE THRU WIREMOLD TYPE RC7 SERIES OR EQUAL WITH DUPLEX OUTLET. COORDINATE LOCATION, PRIOR TO ROUGH-IN.
20. PROVIDE AND INSTALL FIRE RATED POKE THRU WIREMOLD TYPE RC7 SERIES OR EQUAL WITH TEL/DATA JACKS. COORDINATE LOCATION PRIOR TO ROUGH-IN. SEE TEL/DATA OUTLET SCHEDULES FOR QUANTITY OF JACKS.
21. COORDINATE LOCATION PRIOR TO ROUGH-IN.
22. FURNITURE BRANCH CIRCUIT SHALL HAVE, 4 HOT, 2 NEUTRALS, 1 GROUND AND 1 ISOLATED GROUND. VERIFY WIRING REQUIREMENTS WITH FURNITURE VENDOR PRIOR TO ROUGH-IN. ALL WIRES TO BE #10 AWG.

NOTE:
SEE TEL/DATA SCHEDULES FOR OUTLET REQUIREMENTS AND CAT. 6 HOMERUN QUANTITIES FORM EACH OUTLET.

NOTE:
DEDICATED NEUTRALS REQUIRED FOR ALL BRANCH CIRCUITS TO PANELS WITH TVSS UNITS. ALL RECEPTACLE PLATES TO HAVE LABELS INDICATING THE CIRCUIT NUMBER.

NOTES: PREPARE SHOP DRAWINGS SHOWING ALL CONDUIT ROUTING. SUBMIT FOR APPROVAL PRIOR TO ROUGH IN.

O'MAHONY & MYER
ELECTRICAL and LIGHTING DESIGN
4340 REDWOOD HWY., SUITE 245
SAN RAFAEL, CALIFORNIA 94903
(415) 492-0420/FAX (415) 479-9662
www.ommconsulting.com

DIABLO VALLEY COLLEGE

DIABLO VALLEY COLLEGE NEW BOOKSTORE

321 GOLF CLUB RD.
PLEASANT HILL, CALIFORNIA

REGISTERED PROFESSIONAL ENGINEER
PETER A. COLONNA-ROMANO
No.14738
Exp. 6/07
ELECTRICAL
STATE OF CALIFORNIA

DATE: 23 JULY, 2004

REVISIONS:

BID SET

SHEET TITLE:

2ND FLOOR PLAN – POWER & SIGNAL

IDENTIFICATION STAMP
DIVISION OF THE STATE ARCHITECT
105925
APPL 01
AC LE FLS EO SS AL
DATE: 5-12-04 JUL 26 2004

BLDG. ID: 098
ID CODE: 312098-109.01-A

DRAWN BY:
CHECKED BY: PC
JOB NO: 203066

SHEET
E3.3

DIABLO_VALLEY_COLLEGE_BOOKSTORE-203066

Jul 20, 2004 - 9:54am tvessels P:\2003\DIABLO_VALLEY_COLLEGE_BOOKSTORE-203066 \CAD\E37-DVC_BOOKSTORE.DWG

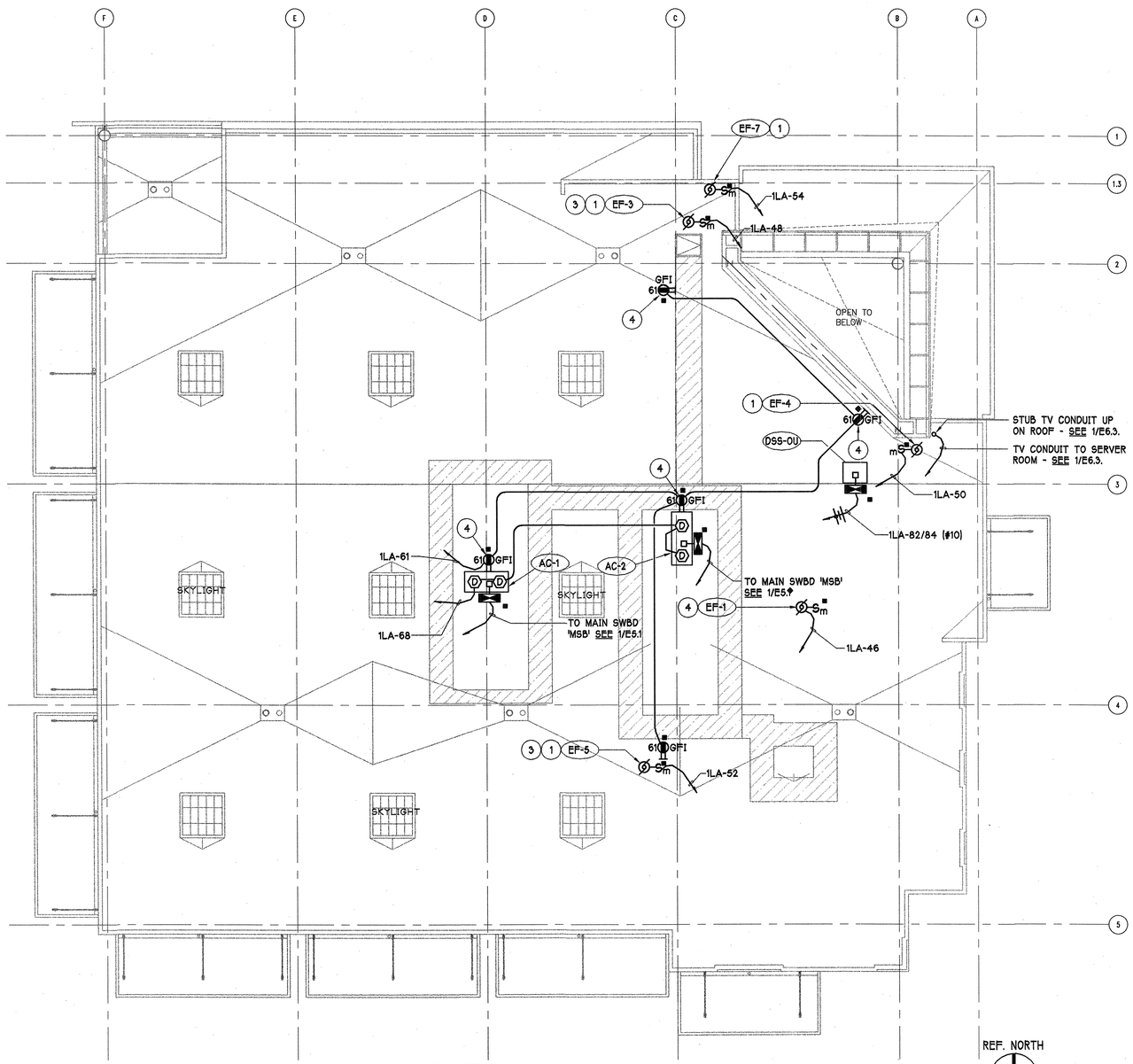

ROOF PLAN - ELECTRICAL

SCALE: 1/8" = 1'-0"
FILE: ... Xplan-r (07-19-04)

1 / E3.7

NUMBERED SHEET NOTES

1. CONNECT 120V CIRCUIT TO EXHAUST FAN. PROVIDE AND INSTALL TOGGLE SWITCH DISCONNECT FOR UNIT. COORDINATE LOCATION AND REQUIREMENTS WITH DIVISION 15.
2. COORDINATE EXACT LOCATION OF DUCT SMOKE DETECTOR WITH MECHANICAL PRIOR TO ROUGH-IN.
3. PROVIDE AND INSTALL CONDUIT AND WIRE TO LINE VOLTAGE THERMOSTAT (BY DIVISION 15). CONNECT COMPLETE. VERIFY LOCATION AND REQUIREMENTS PRIOR TO ROUGH-IN.
4. ROOF RECEPTACLE - COORDINATE LOCATION WITH ARCHITECT PRIOR TO ROUGH-IN.

GENERAL SHEET NOTES

1. REFER TO MECHANICAL PLANS FOR EXACT LOCATION OF ALL MECHANICAL EQUIPMENT. VERIFY EXACT LOCATION AND CONNECTION REQUIREMENTS OF ALL MECHANICAL EQUIPMENT WITH DIVISION 15 PRIOR TO ROUGH-IN. VERIFY EXACT REQUIREMENTS FOR VOLTAGE, PHASE, HORSEPOWER OR KVA RATINGS OF ALL DIVISION 15 EQUIPMENT REQUIRING ELECTRICAL CONNECTIONS.
2. EQUIPMENT OVERLOADS AND FUSES SHALL BE PROVIDED AND INSTALLED AS PER NAME PLAT ON THE EQUIPMENT ACTUALLY PURCHASED.

NOTES: PREPARE SHOP DRAWINGS SHOWING ALL CONDUIT ROUTING. SUBMIT FOR APPROVAL PRIOR TO ROUGH IN.

O'MAHONY & MYER
ELECTRICAL and LIGHTING DESIGN
4340 REDWOOD HWY., SUITE 245
SAN RAFAEL, CALIFORNIA 94903
(415) 492-0420/FAX (415) 479-9662
www.ommconsulting.com

DIABLO VALLEY COLLEGE NEW BOOKSTORE

321 GOLF CLUB RD.
PLEASANT HILL, CALIFORNIA

REGISTERED PROFESSIONAL ENGINEER
PETER S. COLEMAN
No. 14738
Exp. 6/07
ELECTRICAL
STATE OF CALIFORNIA

DATE: 23 JULY, 2004

REVISIONS:

BID SET

SHEET TITLE:
ROOF PLAN – ELECTRICAL

IDENTIFICATION STAMP
DIVISION OF THE STATE ARCHITECT
105925
APPL 01
AC LE FLS EO SS AI
DATE: 5-12-04 JUL 2 6 2004

BLDG. ID: 098
ID CODE: 312098-109.01-A

DRAWN BY:
CHECKED BY: PC
JOB NO: 203066

SHEET E3.7

DIABLO_VALLEY_COLLEGE_BOOKSTORE-203066

Jul 20, 2004 - 9:55am tvessels P:\2003\DIABLO_VALLEY_COLLEGE_BOOKSTORE-203066\CAD\E41-DVC_BOOKSTORE.DWG

CAFE - GENERAL SHEET NOTES

1. REFER TO FOOD SERVICE PLANS FOR ADDITIONAL INFORMATION. COORDINATE ALL ELECTRICAL REQUIREMENTS WITH FOOD SERVICE EQUIPMENT SUPPLIER.
2. FURNISH AND INSTALL THE FOLLOWING:
   - A. ALL JUNCTION-BOXES, ELECTRICAL OUTLETS, COVER PLATES, SWITCHES, ETC., NOT BUILT INTO FIXTURES OR EQUIPMENT. ALL OUTLETS, JUNCTION-BOXES, COVER PLATES, ETC. IN DISHROOMS OR AS INDICATED ON SCHEDULES MUST BE VAPOR PROOF.
   - B. ALL CORDS AND PLUGS SHALL BE N.E.M.A. RATED AND U.L. APPROVED. COORDINATE RECEPTACLE TYPE WITH EQUIPMENT MANUFACTURER.
   - C. DISCONNECTS OR OTHER DEVICES AS REQUIRED BY CODES.

NUMBERED SHEET NOTES

1. 120VOLT DEDICATED CIRCUIT FOR FIRE ALARM PANEL.
2. FOR WIRELESS DATA USE. INSTALL AT 90" ABOVE FINISHED GRADE.
3. ELECTRICALLY OPERATED WINDOW. COORDINATE CONNECTION LOCATIONS, PRIORS TO ROUGH-IN.
4. GARBAGE DISPOSAL. VERIFY LOCATION PRIOR TO ROUGH-IN.
5. PROVIDE AND INSTALL 3/4" CONDUIT WITH PULLWIRE TO THE SERVER ROOM FOR TV OUTLET USE - SEE 3/E7.1.
6. INSTALL AT +96" A.F.F. COORDINATE LOCATION PRIOR TO ROUGH-IN.
7. PROVIDE & INSTALL INTERLOCK CONTROL WIRING BETWEEN FIRE SMOKE DAMPER REMOTE CONTROL PANEL & FIRE SMOKE DAMPERS. VERIFY LOCATION & REQUIREMENTS PRIOR TO ROUGH-IN.

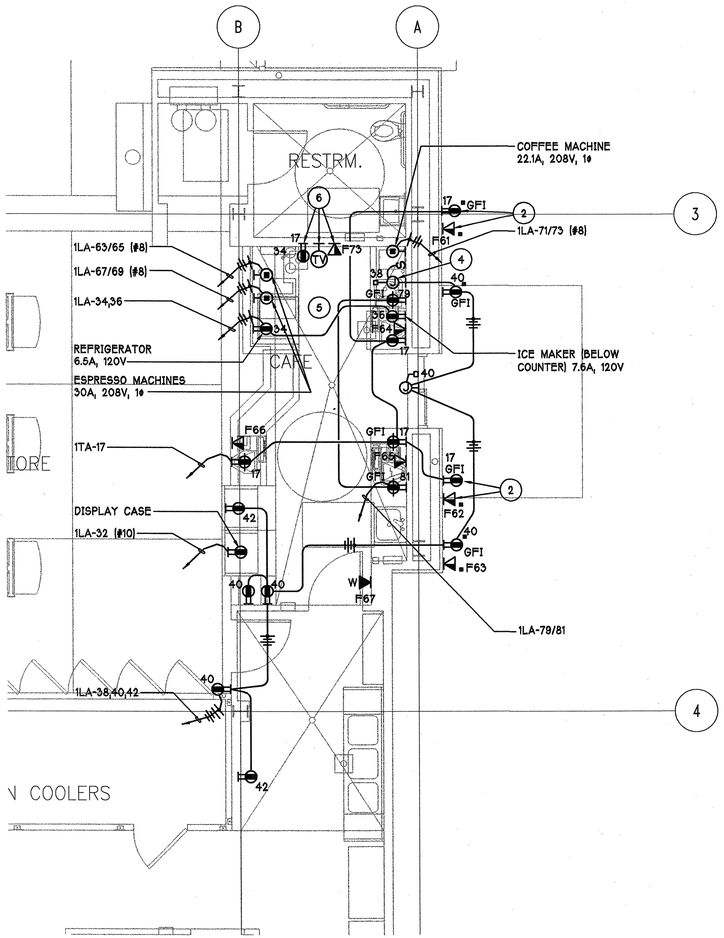

CAFE - PARTIAL PLAN FIRST FLOOR

SCALE: 1/4" = 1'-0"
FILE: ... Xplan-1 (07-19-04) + xStore1 (04-20-04)

3 / E4.1

REF. NORTH

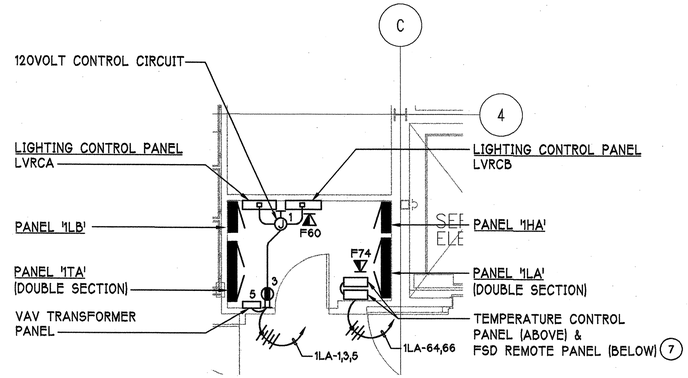

ELECTRICAL ROOM PARTIAL PLAN FIRST FLOOR

SCALE: 1/4" = 1'-0"
FILE: ... Xplan-1 (07-19-04) + xStore1 (04-20-04)

2 / E4.1

REF. NORTH

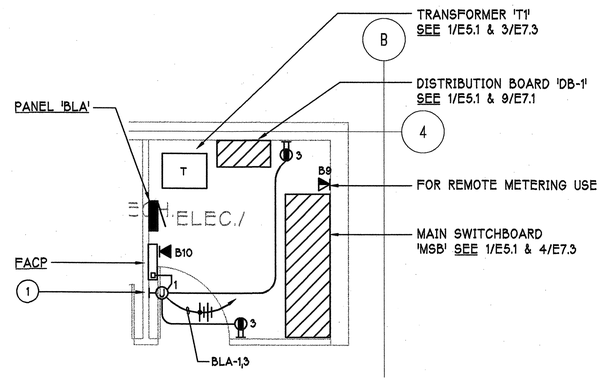

MAIN ELECTRICAL ROOM - PARTIAL PLAN BASEMENT

SCALE: 1/4" = 1'-0"
FILE: ...Xplan-1 (07-19-04) + xStore1 (04-20-04)

1 / E4.1

REF. NORTH

NOTE:
DEDICATED NEUTRALS REQUIRED FOR ALL BRANCH CIRCUITS TO PANELS WITH TVSS UNITS. ALL RECEPTACLE PLATES TO HAVE LABELS INDICATING THE CIRCUIT NUMBER.

O'MAHONY & MYER
ELECTRICAL and LIGHTING DESIGN
4340 REDWOOD HWY., SUITE 245
SAN RAFAEL, CALIFORNIA 94903
(415) 492-0420/FAX (415) 479-9662
www.ommconsulting.com

DIABLO VALLEY COLLEGE
NEW BOOKSTORE

321 GOLF CLUB RD.
PLEASANT HILL, CALIFORNIA

REGISTERED PROFESSIONAL ENGINEER PETER J. COVENANT No.14738 Exp. 6/07 ELECTRICAL STATE OF CALIFORNIA

DATE: 23 JULY, 2004

REVISIONS:

BID SET

SHEET TITLE:
PARTIAL PLANS

IDENTIFICATION STAMP
DIVISION OF THE STATE ARCHITECT
105925
APPL 01
AC LE FLS EO SS M
DATE: 5-12-05 JUL 26 2004

BLDG. ID: 098
ID CODE: 312098-109.01-A

DRAWN BY:
CHECKED BY: PC
JOB NO: 203066

SHEET
E4.1

DIABLO_VALLEY_COLLEGE_BOOKSTORE-203066

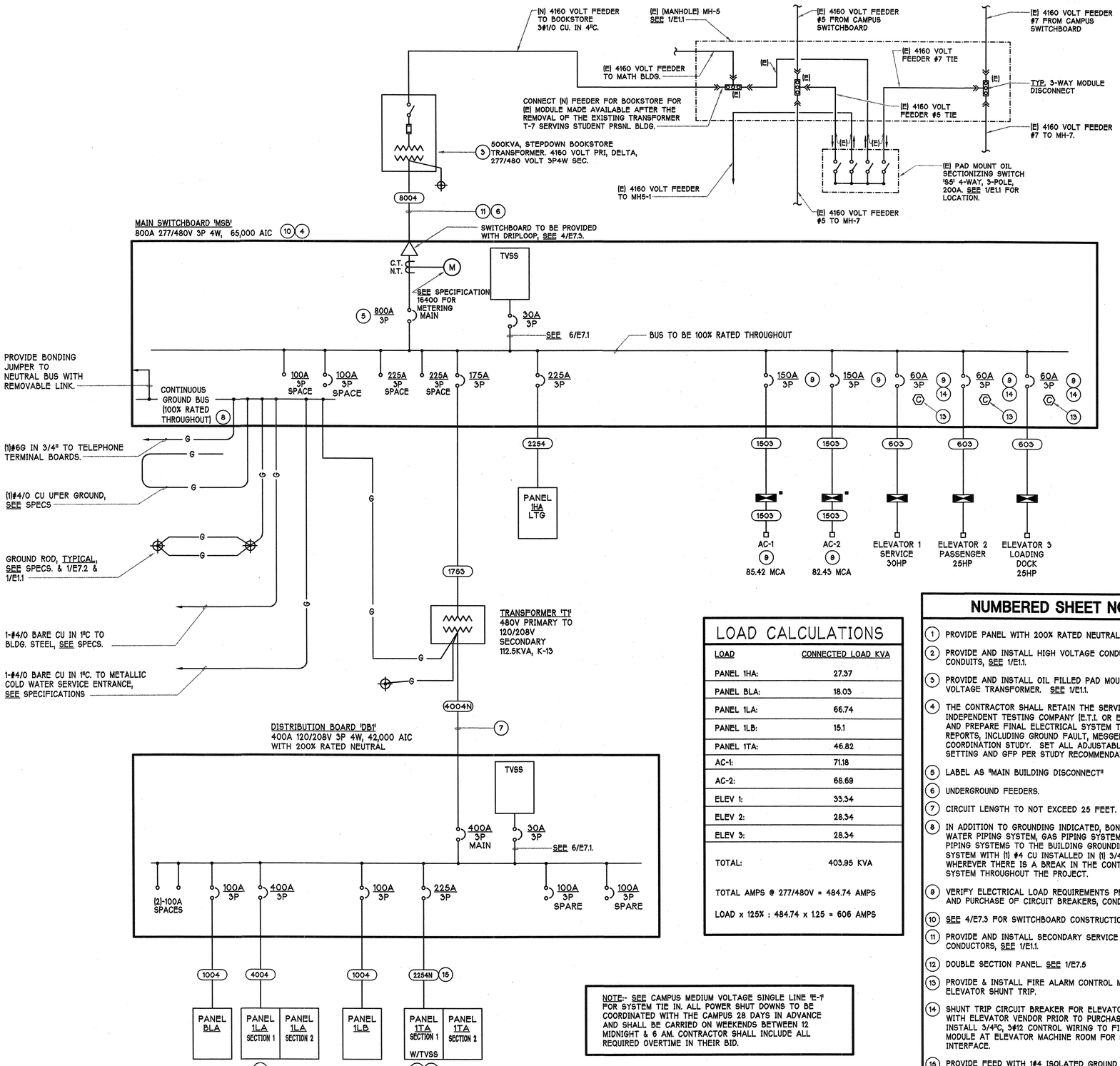

POWER SINGLE LINE DIAGRAM

SCALE: NONE

1 / E5.1

LOAD CALCULATIONS

LOAD	CONNECTED LOAD KVA
PANEL 1HA:	27.37
PANEL BLA:	18.03
PANEL 1LA:	66.74
PANEL 1LB:	15.1
PANEL 1TA:	46.82
AC-1:	71.18
AC-2:	68.69
ELEV 1:	33.34
ELEV 2:	28.34
ELEV 3:	28.34
TOTAL:	403.95 KVA

TOTAL AMPS @ 277/480V = 484.74 AMPS

LOAD x 125% : 484.74 x 1.25 = 606 AMPS

NOTE:- SEE CAMPUS MEDIUM VOLTAGE SINGLE LINE 'E-1' FOR SYSTEM TIE IN. ALL POWER SHUT DOWNS TO BE COORDINATED WITH THE CAMPUS 28 DAYS IN ADVANCE AND SHALL BE CARRIED ON WEEKENDS BETWEEN 12 MIDNIGHT & 6 AM. CONTRACTOR SHALL INCLUDE ALL REQUIRED OVERTIME IN THEIR BID.

NUMBERED SHEET NOTES

1. PROVIDE PANEL WITH 200% RATED NEUTRAL BUS AND TVSS.
2. PROVIDE AND INSTALL HIGH VOLTAGE CONDUCTORS AND CONDUITS, SEE 1/E1.1.
3. PROVIDE AND INSTALL OIL FILLED PAD MOUNTED HIGH VOLTAGE TRANSFORMER. SEE 1/E1.1.
4. THE CONTRACTOR SHALL RETAIN THE SERVICES OF AN INDEPENDENT TESTING COMPANY (E.T.I. OR EQUAL) TO PERFORM AND PREPARE FINAL ELECTRICAL SYSTEM TESTING AND REPORTS, INCLUDING GROUND FAULT, MEGGER AND COORDINATION STUDY. SET ALL ADJUSTABLE BREAKERS TRIP SETTING AND GFP PER STUDY RECOMMENDATIONS.
5. LABEL AS "MAIN BUILDING DISCONNECT"
6. UNDERGROUND FEEDERS.
7. CIRCUIT LENGTH TO NOT EXCEED 25 FEET.
8. IN ADDITION TO GROUNDING INDICATED, BOND ALL COLD WATER PIPING SYSTEM, GAS PIPING SYSTEMS, AND SPRINKLER PIPING SYSTEMS TO THE BUILDING GROUNDING ELECTRODE SYSTEM WITH (1) #4 CU INSTALLED IN (1) 3/4" CONDUIT. BOND WHEREVER THERE IS A BREAK IN THE CONTINUITY OF THESE SYSTEM THROUGHOUT THE PROJECT.
9. VERIFY ELECTRICAL LOAD REQUIREMENTS PRIOR TO ROUGH-IN AND PURCHASE OF CIRCUIT BREAKERS, CONDUIT AND FEEDERS.
10. SEE 4/E7.3 FOR SWITCHBOARD CONSTRUCTION
11. PROVIDE AND INSTALL SECONDARY SERVICE CONDUITS AND CONDUCTORS, SEE 1/E1.1.
12. DOUBLE SECTION PANEL. SEE 1/E7.5
13. PROVIDE & INSTALL FIRE ALARM CONTROL MODULE FOR ELEVATOR SHUNT TRIP.
14. SHUNT TRIP CIRCUIT BREAKER FOR ELEVATOR. VERIFY SIZE WITH ELEVATOR VENDOR PRIOR TO PURCHASE. PROVIDE AND INSTALL 3/4"G, 3#12 CONTROL WIRING TO FIRE ALARM CONTROL MODULE AT ELEVATOR MACHINE ROOM FOR SPRINKLER SYSTEM INTERFACE.
15. PROVIDE FEED WITH 1#4 ISOLATED GROUND CONDUCTOR, IN ADDITION TO THE GROUNDING CONDUCTOR.

COPPER FEEDER SCHEDULE

FEEDER No.	CONDUIT	CONDUCTORS
8004N	(2) 5"	(2) SETS; 3#600/2#600N & 1#1/0 G
8004	(2) 4"	(2) SETS; 4#600 & 1#1/0 G
6004N	(2) 3 1/2"	(2) SETS; 3#350/2#350N & 1#1/0G
6004	(2) 3 1/2"	(2) SETS; 4#350 & 1#1/0 G
6003	(2) 3"	(2) SETS; 3#350 & 1#1/0 G
5004N	(2) 3"	(2) SETS; 3#250/2#250N & 1#1/0 G
5004	(2) 3"	(2) SETS; 4#250 & 1#1/0 G
5003	(2) 3"	(2) SETS; 3#250 & 1#1/0 G
4504N	(2) 3"	(2) SETS; 3#250/2#250N & 1#1/0 G
4504	(2) 2 1/2"	(2) SETS; 4#4/0 & 1#1/0 G
4503	(2) 2"	(2) SETS; 3#4/0 & 1#1/0 G
4004N	(1) 4"	3#500, 2#500N & 1#1/0G
3004N	(1) 3 1/2"	3#350/2#350N & 1#2 G
3004	(1) 3"	4#350 & 1#2 G
3003	(1) 3"	3#350 & 1#2 G
2754	(1) 3"	4#300 & 1#4 G
2753	(1) 2 1/2"	3#300 & 1#4 G
2504N	(1) 3"	3#250, 2#250N & 1#4 G
2504	(1) 2 1/2"	4#250 & 1#4 G
2503	(1) 2"	3#250 & 1#4 G
2254N	(1) 3"	3#4/0, 2#4/0N & 1#4 G
2254	(1) 2 1/2"	4#4/0 & 1#4 G
2253	(1) 2"	3#4/0 & 1#4 G
2004N	(1) 2 1/2"	3#3/0, 2#3/0N &1#4 G
2004	(1) 2"	4#3/0 & 1#4 G
2003	(1) 2"	3#3/0 & 1#4 G
1755N	(1) 2"	3#2/0, 2#2/0N & 1#6 G
1754	(1) 2"	4#2/0 & 1#6 G
1753	(1) 1 1/2"	3#2/0 & 1#6 G
1504N	(1) 2"	3#1/0, 2#1/0N & 1#6 G
1504	(1) 1 1/2"	4#1/0 & 1#6 G
1503	(1) 1 1/2"	3#1/0 & 1#6 G
1254N	(1) 2"	3#1, 2#1N & 1#6 G
1254	(1) 1 1/2"	4#1 & 1#6 G
1253	(1) 1 1/4"	3#1 & 1#6 G
1004N	(1) 1 1/2"	3#2, 2#2N & 1#6 G
1004	(1) 1 1/4"	4#2 & 1#6 G
1003	(1) 1 1/4"	3#2 & 1#6 G
904	(1) 1 1/4"	4#2 & 1#6 G
903	(1) 1 1/4"	3#2 & 1#6 G
804	(1) 1 1/4"	4#4 & 1#6 G
803	(1) 1"	3#4 & 1#6 G
704	(1) 1 1/4"	4#4 & 1#8 G
703	(1) 1"	3#4 & 1#8 G
604	(1) 1 1/4"	4#6 & 1#10 G
603	(1) 1"	3#6 & 1#10 G
504	(1) 1"	4#8 & 1#10 G
503	(1) 3/4"	3#8 & 1#10 G
404N	(1) 1"	3#8/2#8N & 1#6G
404	(1) 3/4"	4#8 & 1#10 G
403	(1) 3/4"	3#8 & 1#10 G

FEEDER TAG KEY:

1004N
- INDICATES DOUBLE NEUTRAL
- WIRE QUANTITY
- FEEDER AMPACITY

O'MAHONY & MYER
ELECTRICAL and LIGHTING DESIGN
4340 REDWOOD HWY., SUITE 245
SAN RAFAEL, CALIFORNIA 94903
(415) 492-0420/FAX (415) 479-9662
www.ommconsulting.com

DIABLO VALLEY COLLEGE
NEW BOOKSTORE

321 GOLF CLUB RD.
PLEASANT HILL, CALIFORNIA

REGISTERED PROFESSIONAL ENGINEER PAUL A. COLEMAN No.14738 Exp. 6/07 ELECTRICAL STATE OF CALIFORNIA

DATE: 23 JULY, 2004

REVISIONS:

BID SET

SHEET TITLE:
POWER SINGLE LINE DIAGRAM

IDENTIFICATION STAMP
DIVISION OF THE STATE ARCHITECT
105925
APPL 01
AC LE FLS ED SS AI
DATE: 5-12-04 JUL 26 2004

BLDG. ID: 098
ID CODE: 312098-109.01-A

DRAWN BY:
CHECKED BY: PC
JOB NO: 203066

SHEET E5.1

Jul 20, 2004 - 10:53am jkirk P:\2003\DIABLO_VALLEY_COLLEGE_BOOKSTORE-203066\CAD\E51-DVC_BOOKSTORE.DWG

DIABLO_VALLEY_COLLEGE_BOOKSTORE-203066

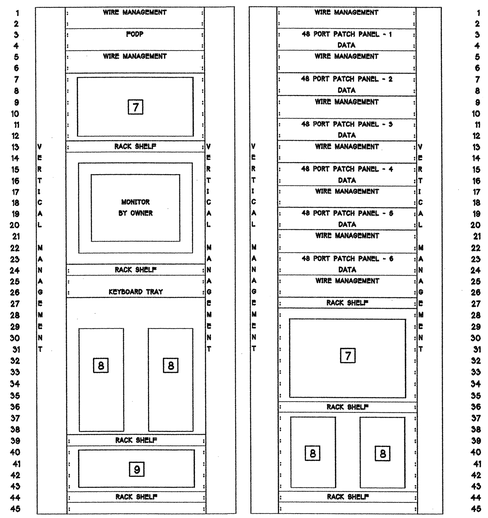

MDF DATA FRAME ELEVATION

SCALE: NONE

3 / E5.3

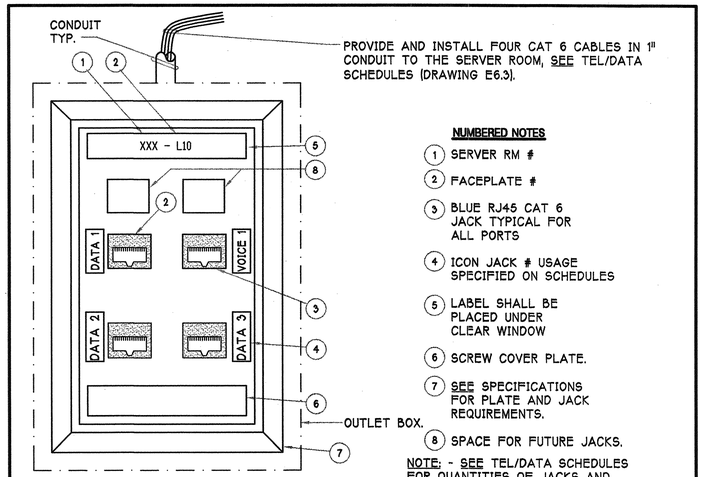

PROVIDE AND INSTALL FOUR CAT 6 CABLES IN 1" CONDUIT TO THE SERVER ROOM, SEE TEL/DATA SCHEDULES (DRAWING E6.3).

NUMBERED NOTES

1. SERVER RM #
2. FACEPLATE #
3. BLUE RJ45 CAT 6 JACK TYPICAL FOR ALL PORTS
4. ICON JACK # USAGE SPECIFIED ON SCHEDULES
5. LABEL SHALL BE PLACED UNDER CLEAR WINDOW
6. SCREW COVER PLATE.
7. SEE SPECIFICATIONS FOR PLATE AND JACK REQUIREMENTS.
8. SPACE FOR FUTURE JACKS.

NOTE: - SEE TEL/DATA SCHEDULES FOR QUANTITIES OF JACKS AND QUANTITIES OF HOME RUN CABLES

TYPICAL TEL/ DATA OUTLET

SCALE: NONE

1 / E5.3

COMMUNICATIONS EQUIPMENT LIST

1	WALL MOUNTED GROUND BUS CABINET	SEE 4/E7.5
1A	PROVIDE #6 INSULATED COPPER GROUND WIRE TO EACH RACK.	LUG DIRECTLY TO RACKS AND TRAY WITH BURNDY LUGS (OR EQUAL)
2	FLOOR MOUNTED OPEN STYLE UNIVERSAL 19" X 7'-0" EQUIPMENT RACK (ALUMINUM FINISH)	CHATSWORTH #55054-503 OR EQUAL (BOLT TO FLOOR)
3	6" WIDE VERTICAL WIRE MANAGEMENT PANEL (FOR 7'-0" RACK)	LEVITON #49265 OR EQUAL
4	3" WIDE WALL MOUNT WIRE MANAGEMENT DISTRIBUTION RINGS	CHATSWORTH #10812-001 OR EQUAL
5	HORIZONTAL WIRE MANAGEMENT PANEL (2RU)	LEVITON #49252-P02 OR EQUAL
6	48-PORT CAT. 6 PATCH PANEL (2RU)	LEVITON #49270-U48 OR EQUAL, MODULAR TO 110
7	FIBER OPTIC EQUIP., NETWORK SWITCHES, HUBS AND/OR OTHER ACTIVE NETWORK EQUIPMENT	BY OWNERS NETWORK INTEGRATOR OR OWNER
8	SERVERS	BY OWNERS NETWORK INTEGRATOR OR OWNER
9	RACK MOUNTED UPS	BY OWNERS NETWORK INTEGRATOR OR OWNER
10	6 FT. VERTICAL PLUG-MOLD POWER STRIP (SIDE OR BACK MOUNTED ON RACK) PLUG INTO RACK MOUNTED UPS OUTPUT.	WIREMOLD #UL2062B OR EQUAL WITH 15' CORD AND PLUG
11A	CATEGORY 6 MODULAR PATCH CORDS (5FT.): PROVIDE QTY. TO MATCH ACTIVATED JACKS ON PROJECT (BLUE JACKET FOR DATA)	LEVITON #62455-05L OR EQUAL
11B	CATEGORY 6 MODULAR PATCH CORDS (7FT.): PROVIDE QTY. TO MATCH ACTIVATED JACKS ON PROJECT (BLUE JACKET FOR DATA)	LEVITON #62455-07L OR EQUAL
12	FIBER OPTIC DISTRIBUTION PANEL (2RU) (MOUNTED AT TOP OF RACK PER OWNER REQUIREMENTS).	LEVITON OPT-X OR EQUAL, 48 PORT, DOOR WITH KEY, NO SPLICE TRAY, WITH ADAPTER PANEL FOR PATCHING TYPE SC ADAPTERS, RACK MOUNTED.
13	CABLING BETWEEN NETWORK EQUIPMENT	BY OWNERS NETWORK INTEGRATOR OR OWNER
14	RACK MOUNTED EQUIPMENT SHELF WITH KEYBOARD TRAY (19"W X 22"D).	HOMACO #ES-19-4 OR EQUAL WITH #PTR TRAY
15	RACK MOUNTED EQUIPMENT SHELF	HOMACO #ES-19-4 OR EQUAL
16	FIBER OPTIC CABLE AND/OR COPPER BACK BONE CABLING.	PROVIDED AND INSTALLED BY OWNER
17	WALL MOUNTED 300 PAIR 110 FIELD FRAME WITH CONNECTOR BLOCKS & CABLE MGMT.	LEVITON #41MB2-3FT OR EQUAL
18	TELEPHONE LINE CABLES	BY OWNERS NETWORK INTEGRATOR OR OWNER

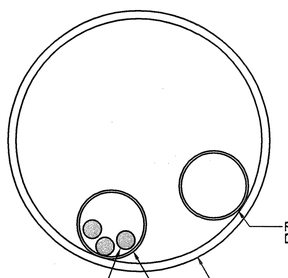

PROVIDE AND INSTALL SPARE INNER DUCT

DATA COMMUNICATIONS CONDUIT, SEE E1.1 FOR LOCATION OF CONDUITS

FIBER OPTIC CABLE, TYPICAL

PROVIDE 1" I.D. FIBER OPTIC CORRUGATED PVC CONDUIT, CARLON #13108, ORANGE COLOR, PROVIDE WITH PREINSTALLED POLYROPE #RP141

DATA CONDUIT AND CABLE SECTION

SCALE: NONE
FILE: L:\POWER\CONDUIT\PCOND015

4 / E5.3

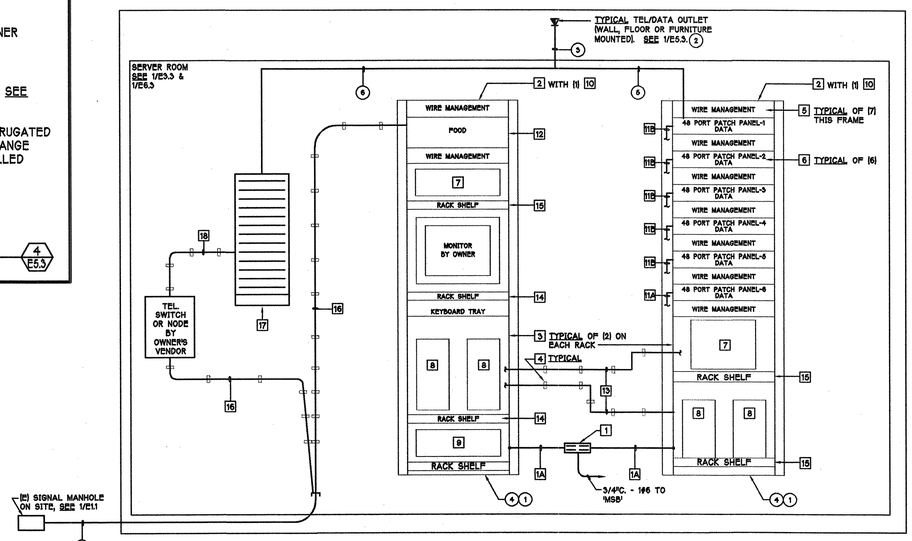

TELEPHONE/DATA SYSTEM DIAGRAM

SCALE: NONE

2 / E5.3

NUMBERED SHEET NOTES

1. SEE 3/E5.3.
2. SEE FLOOR PLANS & TEL/DATA OUTLET SCHEDULES TYPICAL THIS PROJECT U.O.N.
3. PROVIDE AND INSTALL CAT. 6 CABLES HOMERUN TO THE MDF OR TELEPHONE TERMINATION BLOCKS. SEE TELEPHONE/DATA OUTLET SCHEDULES ON DRAWING E6.3 FOR HOMERUN QUANTITIES FROM EACH OUTLET TYPICAL THIS PROJECT U.O.N.
4. MDF EQUIPMENT.
5. PROVIDE AND INSTALL HOMERUN DATA CABLES TO DATA PATCH PANELS AND CONNECT COMPLETE.
6. PROVIDE AND INSTALL HOMERUN CAT. 6 CABLES TO THE TELEPHONE BLOCKS AND CONNECT COMPLETE.
7. PROVIDE AND INSTALL (N) CONDUITS TO SERVER ROOM SEE 1/E1.1 FOR QUANTITY & SIZE. SEE 2/E6.3 FOR ENTRY INTO BUILDING.

NOTE: PROVIDE AND INSTALL ALL ITEMS/EQUIPMENT/CABLING SHOWN UNLESS OTHERWISE NOTED.

O'MAHONY & MYER
ELECTRICAL and LIGHTING DESIGN
4340 REDWOOD HWY, SUITE 245
SAN RAFAEL, CALIFORNIA 94903
(415) 492-0420/FAX (415) 479-9662
www.ommconsulting.com

DIABLO VALLEY COLLEGE NEW BOOKSTORE

321 GOLF CLUB RD.
PLEASANT HILL, CALIFORNIA

REGISTERED PROFESSIONAL ENGINEER
PETER J. COLOMBANDER
No.14738
Exp. 6/07
ELECTRICAL
STATE OF CALIFORNIA

DATE: 23 JULY, 2004

REVISIONS:

BID SET

SHEET TITLE:

TELEPHONE/ DATA SYSTEM RISER DIAGRAM

IDENTIFICATION STAMP
DIVISION OF THE STATE ARCHITECT
105925
APPL 01
AC UE FLS EO SS AI
DATE: 5-12-04 JUL 26 2004

BLDG. ID: 098
ID CODE: 312098-109.01-A

DRAWN BY: KK
CHECKED BY: PC
JOB NO: 203066

SHEET E5.2

Jul 20, 2004 - 11:59am jkirk P:\2003\DIABLO_VALLEY_COLLEGE_BOOKSTORE-203066\CAD\E52-DVC_BOOKSTORE.DWG

DIABLO_VALLEY_COLLEGE_BOOKSTORE-203066

Jul 20, 2004 - 10:55am jkirk P:\2003\DIABLO_VALLEY_COLLEGE_BOOKSTORE-203066\CAD\E61-DVC_BOOKSTORE.DWG

PANEL 1TA

VOLTS: 120 / 208 V
PHASE: 3
WIRE: 4 W
BUSSING: 225A
POLES: 42P

- PROVIDE PANEL WITH TVSS
- 200% RATED NEUTRAL BUS
* = CIRCUIT BREAKER WITH LOCK-ON DEVICE
- PROVIDE PANEL ISOLTED GROUND BUS

MAIN BRKR: MLO
FEEDER: SEE SCHEDULE
CONDUIT: SEE SCHEDULE
MOUNTED: SURFACE
AIC RATING: 42,000

LOAD DESCRIPTION	TYPE	A	B	C	BRKR.	CKT.	CKT.	BRKR.	A	B	C	TYPE	LOAD DESCRIPTION
RECEPT-BSMT OFFICE	R	0.72			20/1	1	2	20/1	1.08			R	FLR RECEPT-CHECK OUT
RECEPT-BSMT OFFICE	R		0.72		20/1	3	4	20/1		1.08		R	FLR RECEPT-CHECK OUT
SPARE					20/1	5	6	20/1			0.72	R	FLR RECEPT-STORE
RECEPT-BUYBACK	R	0.90			20/1	7	8	20/1	0.72			R	FLR RECEPT-RETAIL
RECEPT-BUYBACK	R		0.90		20/1	9	10	20/1		1.08		R	FLR RECEPT-CHECK OUT
RECEPT-BUYBACK / COUNTING	R			1.08	20/1	11	12	20/1			1.08	R	FLR RECEPT-CHECK OUT
RECEPT-OFFICE / STORE	R	0.90			20/1	13	14	20/1	0.72			R	FLR RECEPT-RETAIL
RECEPT-OFFICE	R		0.90		20/1	15	16	20/1		0.72		R	FLR RECEPT-RETAIL
RECEPT-CAFE	R			1.08	20/1	17	18	20/1			0.72	R	RECEPT-RETAIL COLUMN
RECEPT-RETAIL DESK	R	0.72			20/1	19	20	20/1	0.72			R	FLR RECEPT-RETAIL
RECEPT-RETAIL DESK	R		0.72		20/1	21	22	20/1		1.08		R	FLR RECEPT-RETAIL, COLUMN
RECEPT-RETAIL	R			0.18	20/1	23	24	20/1			1.08	R	FLR RECEPT-CHECK OUT
SPARE					20/1	25	26	20/1	0.72			R	RECEPT-RETAIL
SPARE					20/1	27	28	20/1		0.72		R	RECEPT-RETAIL
SPARE					20/1	29	30	20/1 *			0.20	R	SECURITY PANEL
SPARE					20/1	31	32	20/1	0.54			R	RACEWAY RECEPT-COUNTING
SPARE					20/1	33	34	20/1		0.54		R	RACEWAY RECEPT-COUNTING
SPARE					20/1	35	36	20/1			0.54	R	RACEWAY RECEPT-COUNTING
SPARE					20/1	37	38	20/1	0.54			R	RACEWAY RECEPT-COUNTING
SPARE					20/1	39	40	20/1		0.54		R	RACEWAY RECEPT-COUNTING
SPARE					20/1	41	42	20/1			0.54	R	RACEWAY RECEPT-COUNTING
		3.24	3.24	2.34					5.04	5.76	4.68		

DEMAND LOAD SUMMARY	CONN. KVA	DEMAND FACTOR	DEMAND KVA
TYPE "M": NON-CONTINUOUS / MISC. LOADS	0.00	100%	0.00
TYPE "L": LIGHTING / CONTINUOUS LOADS	0.00	125%	0.00
TYPE "R": RECEPTACLES (FIRST 10KVA)	10.00	100%	10.00
TYPE "R": RECEPTACLES (OVER 10KVA)	14.50	50%	7.25
TYPE "H": HVAC / MECHANICAL LOADS	0.00	100%	0.00
TOTALS:	24.50		17.25

PHASE A: 8.26 KVA
PHASE B: 9.00 KVA
PHASE C: 7.22 KVA
75.00 MAX AMPS / PHASE

PANEL 1LA

VOLTS: 120 / 208 V
PHASE: 3
WIRE: 4 W
BUSSING: 400A
POLES: 42P

* = BREAKER WITH LOCK-ON DEVICE

MAIN BRKR: MLO
FEEDER: SEE SCHEDULE
CONDUIT: SEE SCHEDULE
MOUNTED: SURFACE
AIC RATING: 42,000

LOAD DESCRIPTION	TYPE	A	B	C	BRKR.	CKT.	CKT.	BRKR.	A	B	C	TYPE	LOAD DESCRIPTION
LIGHTING CONTROL PANEL	M	0.20			20/1	1	2	20/1	0.70			L	LTG - RETAIL, UNDER DESK NOSING
RECEPT-ELECT ROOM	R		0.18		20/1	3	4	20/1		1.14		L	LTG - RETAIL DISPLAY
THEFT DETECTION SYSTEM	M			0.50	20/1	5	6	20/1			0.78	L	LTG - STORE MONOPOINT
THEFT DETECTION SYSTEM	M	0.50			20/1	7	8	20/1	1.50			L	LTG - RETAIL TRACK
THEFT DETECTION SYSTEM	M		0.50		20/1	9	10	20/1		1.50		L	LTG - RETAIL TRACK
ELEVATOR SUMP PUMP	H			1.00	20/1	11	12	20/1			1.50	L	LTG - RETAIL TRACK
ELEVATOR MACHINE RM, PIT	R	0.70			20/1	13	14	20/1	1.50			L	LTG - RETAIL TRACK
ELEVATOR CAB LTS	M		0.40		20/1	15	16	20/1		0.50		L	LTG - COOLER
ELEVATOR CONTROLS	M			0.20	20/1	17	18	20/1			0.40	L	LTG - DISPLAY CABINETS
AUTO DOOR	M	1.00			20/1	19	20	20/1	0.30			L	LTG - LOADING DOCK LIGHT
AUTO DOOR-MAIN ENTRY	M		1.00		20/1	21	22	20/1		0.82		L	LTG - LOW VOLTAGE STRIP
AUTO DOOR-MAIN ENTRY	M			1.00	20/1	23	24	20/1			1.00	H	EDF
FIRE SMOKE DAMPER	H	0.20			20/1 *	25	26	20/1	0.97			M	COOLER FAN
DOOR ALARMS	M		0.50		20/1 *	27	28	20/1		1.00		L	COOLER LIGHTS
RECEPT-BUYBACK, EXTERIOR	R			0.54	20/1	29	30	20/1			0.72	R	RECEPT-OFFICE
RECEPT-WINDOWS	R	0.54			20/1	31	32	20/1				R	RECEPT-DISPLAY CASE
RECEPT-DISPLAY, EXTERIOR	R		0.90		20/1	33	34	20/1		0.78		R	RECEPT-CAFE REFR
RECEPT-DISPLAY	R			0.72	20/1	35	36	20/1			0.91	R	RECEPT-CAFE ICE MACHINE
RECEPT-WINDOWS	R	0.54			20/1	37	38	20/1	1.08			R	DISPOSAL
RECEPT-JAN, EDF, EXTERIOR	R		0.90		20/1	39	40	20/1		0.72		R	RECEPT-CAFÉ
RECEPT-RESTROOMS	R			0.72	20/1	41	42	20/1			0.90	R	RECEPT-CAFÉ REFR
		3.68	4.38	4.66					6.05	6.46	6.21		

DEMAND LOAD SUMMARY	CONN. KVA	DEMAND FACTOR	DEMAND KVA
TYPE "M": NON-CONTINUOUS / MISC. LOADS	6.77	100%	6.77
TYPE "L": LIGHTING / CONTINUOUS LOADS	11.64	125%	14.55
TYPE "R": RECEPTACLES (FIRST 10KVA)	10.00	100%	10.00
TYPE "R": RECEPTACLES (OVER 10KVA)	0.85	50%	0.43
TYPE "H": HVAC / MECHANICAL LOADS	2.20	100%	2.20
TOTALS:	31.46		33.95

PHASE A: 9.73 KVA
PHASE B: 10.64 KVA
PHASE C: 10.89 KVA
90.75 MAX AMPS / PHASE

PANEL 1HA

VOLTS: 277 / 480 V
PHASE: 3
WIRE: 4 W
BUSSING: 225A
POLES: 42P

MAIN BRKR: MLO
FEEDER: SEE SCHEDULE
CONDUIT: SEE SCHEDULE
MOUNTED: SURFACE
AIC RATING: 65,000

LOAD DESCRIPTION	TYPE	A	B	C	BRKR.	CKT.	CKT.	BRKR.	A	B	C	TYPE	LOAD DESCRIPTION
LTG - RECEIVING, BUY BACK, COUNTING	L	3.11			20/1	1	2	20/1	2.38			L	LTG - CHECKOUT, BRIDGE, ELEV MALK
LTG - EXTERIOR SOFFIT, ENTRY	L		3.45		20/1	3	4	20/1		2.51		L	LTG - STORE, CAFÉ, SEC, OFFICE
LTG - BOLLARDS, LOADING DOCK	L			1.92	20/1	5	6	20/1			3.28	L	LTG - MAIN ENTRY, SERVER
SPARE					20/1	7	8	20/1	2.89			L	LTG - OPEN OFFICE, BREAK, TOILETS
LTG - LOADING DOCK			2.10		20/1	9	10	20/1		2.76		L	LTG - RETAIL - 'ca, ct, cu'
SPARE					20/1	11	12	20/1			2.61	L	LTG - RETAIL - 'cv, cw, cx'
SPARE					20/1	13	14	20/1	2.46			L	LTG - RETAIL - 'cy, cz, da'
SPARE					20/1	15	16	20/1					SPARE
SPARE					20/1	17	18	20/1					SPARE
SPARE					20/1	19	20	20/1					SPARE
SPARE					20/1	21	22	20/1					SPARE
SPARE					20/1	23	24	20/1					SPARE
SPARE					20/1	25	26	20/1					SPARE
SPARE					20/1	27	28	20/1					SPARE
SPARE					20/1	29	30	20/1					SPARE
SPARE					20/1	31	32	20/1					SPARE
SPARE					20/1	33	34	20/1					SPARE
SPARE					20/1	35	36	20/1					SPARE
SPACE						37	38						SPACE
SPACE						39	40						SPACE
SPACE						41	42						SPACE
		3.11	5.55	1.92					7.73	5.27	5.89		

DEMAND LOAD SUMMARY	CONN. KVA	DEMAND FACTOR	DEMAND KVA
TYPE "M": NON-CONTINUOUS / MISC. LOADS	0.00	100%	0.00
TYPE "L": LIGHTING / CONTINUOUS LOADS	27.37	125%	34.21
TYPE "R": RECEPTACLES (FIRST 10KVA)	0.00	100%	0.00
TYPE "R": RECEPTACLES (OVER 10KVA)	0.00	50%	0.00
TYPE "H": HVAC / MECHANICAL LOADS	0.00	100%	0.00
TOTALS:	27.37		34.21

PHASE A: 10.84 KVA
PHASE B: 10.82 KVA
PHASE C: 7.81 KVA
39.13 MAX AMPS / PHASE

PANEL 1TA

VOLTS: 120 / 208 V
PHASE: 3
WIRE: 4 W
BUSSING: 225A
POLES: 42P

SECTION 2 (SEE 1/E7.5)
- PROVIDE PANEL WITH TVSS
- 200% RATED NEUTRAL BUS
* = CIRCUIT BREAKER WITH LOCK-ON DEVICE
- PROVIDE PANEL ISOLTED GROUND BUS

MAIN BRKR: MLO
FEEDER: SEE SCHEDULE
CONDUIT: SEE SCHEDULE
MOUNTED: SURFACE
AIC RATING: 42,000

LOAD DESCRIPTION	TYPE	A	B	C	BRKR.	CKT.	CKT.	BRKR.	A	B	C	TYPE	LOAD DESCRIPTION
RECEPT-2nd FLR SERVER	R	0.72			20/1	43	44	20/1	0.72			R	RECEPT-2nd FLR FURN. SYSTEM
RECEPT-2nd FLR SERVER	R		0.72		20/1	45	46	20/1		0.72		R	RECEPT-2nd FLR FURN. SYSTEM
RECEPT-2nd FLR SERVER	R			0.72	20/1	47	48	20/1			0.72	R	RECEPT-2nd FLR FURN. SYSTEM
RECEPT-2nd FLR SERVER	R	0.90			20/1	49	50	20/1	0.72			R	RECEPT-2nd FLR FURN. SYSTEM
RECEPT-2nd FLOOR	R		0.72		20/1	51	52	20/1		0.72		R	RECEPT-2nd FLR FURN. SYSTEM
RECEPT-2nd FLR EQUIPT.	R			0.54	20/1	53	54	20/1			0.72	R	RECEPT-2nd FLR FURN. SYSTEM
RECEPT-2nd FLR BREAK, OFFICE	R	1.08			20/1	55	56	20/1	0.72			R	RECEPT-2nd FLR FURN. SYSTEM
RECEPT-2nd FLR OFFICE, WAITING, BREAK	R		1.08		20/1	57	58	20/1		0.72		R	RECEPT-2nd FLR FURN. SYSTEM
RECEPT-2nd FLR OPEN OFFICE	R			0.36	20/1	59	60	20/1			0.72	R	RECEPT-2nd FLR FURN. SYSTEM
RECEPT-2nd FLR OPEN OFFICE	R	0.72			20/1	61	62	20/1	0.72			R	RECEPT-2nd FLR FURN. SYSTEM
RECEPT-2nd FLR - FURN. SYSTEM	R		0.72		20/1	63	64	20/1		0.72		R	RECEPT-2nd FLR FURN. SYSTEM
RECEPT-2nd FLR - FURN. SYSTEM	R			0.72	20/1	65	66	20/1			0.72	R	RECEPT-2nd FLR FURN. SYSTEM
RECEPT-2nd FLR - FURN. SYSTEM	R	0.72			20/1	67	68	20/1	0.72			R	RECEPT-2nd FLR FURN. SYSTEM
RECEPT-2nd FLR - FURN. SYSTEM	R		0.72		20/1	69	70	20/1		0.72		R	RECEPT-2nd FLR FURN. SYSTEM
FLOOR OUTLET - OFFICES	R			0.36	20/1	71	72	20/1			0.72	R	RECEPT-2nd FLR FURN. SYSTEM
SPARE					20/1	73	74	20/1	0.72			R	RECEPT-2nd FLR FURN. SYSTEM
SPARE					20/1	75	76	20/1					SPARE
SPARE					20/1	77	78	20/1					SPARE
SPARE					20/1	79	80	20/1					SPARE
SPARE					20/1	81	82	20/1					SPARE
SPARE					20/1	83	84	20/1					SPARE
		4.14	3.96	2.70					4.32	3.60	3.60		

DEMAND LOAD SUMMARY	CONN. KVA	DEMAND FACTOR	DEMAND KVA
TYPE "M": NON-CONTINUOUS / MISC. LOADS	0.00	100%	0.00
TYPE "L": LIGHTING / CONTINUOUS LOADS	0.00	125%	0.00
TYPE "R": RECEPTACLES (FIRST 10KVA)	10.00	100%	10.00
TYPE "R": RECEPTACLES (OVER 10KVA)	12.32	50%	6.16
TYPE "H": HVAC / MECHANICAL LOADS	0.00	100%	0.00
TOTALS:	22.32		16.16

PHASE A: 8.46 KVA
PHASE B: 7.56 KVA
PHASE C: 6.30 KVA
70.50 MAX AMPS / PHASE

PANEL 1LA

VOLTS: 120 / 208 V
PHASE: 3
WIRE: 4 W
BUSSING: 400A
POLES: 42P

SECTION 2 (SEE 1/E7.5)
* = BREAKER WITH LOCK-ON DEVICE
** = GFI CIRCUIT BREAKER

MAIN BRKR: MLO
FEEDER: SEE SCHEDULE
CONDUIT: SEE SCHEDULE
MOUNTED: SURFACE
AIC RATING: 42,000

LOAD DESCRIPTION	TYPE	A	B	C	BRKR.	CKT.	CKT.	BRKR.	A	B	C	TYPE	LOAD DESCRIPTION
RECEPT-2nd FLR BREAK	R	0.18			20/1	43	44	20/1	0.08			H	EXH FAN EF-2 (1st FLR TOILET)
RECEPT-2nd FLR BREAK	R		0.18		20/1	45	46	20/1		0.70		H	EXH FAN EF-1 (ROOF) 1/4 HP
RECEPT-2nd FLR BREAK	R			0.18	20/1	47	48	20/1			0.70	H	EXH FAN EF-3 (ROOF) 1/4 HP
RECEPT-2nd FLR BREAK	R	0.18			20/1	49	50	20/1	0.70			H	EXH FAN EF-4 (ROOF) 1/4 HP
RECEPT-2nd FLR VENDING MACH	R		1.00		20/1	51	52	20/1		0.87		H	EXH FAN EF-5 (ROOF) 1/3 HP
RECEPT-2nd FLR BREAK, EDF	R			0.90	20/1	53	54	20/1			0.10	H	EXH FAN EF-7 (ROOF) 1/60 HP
RECEPT-2nd FLR WALKWAY	R	0.72			20/1	55	56	20/1	0.25			M	PROJECTION SCREEN
RECEPT-2nd FLR RESTROOMS	R		0.72		20/1	57	58	20/1					SPARE
2nd FLR FIRE SMOKE DAMPERS	H			0.10	20/1 *	59	60	20/1					SPARE
RECEPT-ROOF	R	0.54			20/1	61	62	20/1					SPARE
RECEPT-ESPRESSO MACHINE	M		2.00		30/2	63	64	20/1		0.20		H	FSD REMOTE PANEL
RECEPT-ESPRESSO MACHINE	M			2.00		65	66	20/1			0.20	H	TEMPERTURE CONTROL PANEL
RECEPT-ESPRESSO MACHINE	M	2.30			30/2	67	68	20/1 *	0.10			H	AHU-1 & 2 DUCT DETECTORS
RECEPT-ESPRESSO MACHINE	M		2.30			69	70	50/2		4.00		M	COOLER REMOTE REFRIG RACK
RECEPT-COFFEE MACHINE	M			2.30	30/2	71	72				4.00	M	COOLER REMOTE REFRIG RACK
RECEPT-COFFEE MACHINE	M	2.30				73	74	20/1	0.20			H	VAV TRANSFORMER PANEL
SPARE					50/2	75	76	20/1		0.40		H	VAV-6, 9, 10, & 11
SPARE						77	78	20/1			0.50	H	VAV-3, 4, 5, 6 & 7
RECEPT-CAFÉ	R	0.36			20/1	79	80	20/1	0.24			H	OSS-IU
RECEPT-CAFÉ	R		0.36		20/1	81	82	30/2		1.66		H	OSS-OU (ROOF)
IRRIGATION CONTROLLER	M			0.50	20/1 **	83	84				1.66	H	OSS-OU (ROOF)
		6.58	6.58	5.98					1.57	7.83	7.16		

DEMAND LOAD SUMMARY	CONN. KVA	DEMAND FACTOR	DEMAND KVA
TYPE "M": NON-CONTINUOUS / MISC. LOADS	21.95	100%	21.95
TYPE "L": LIGHTING / CONTINUOUS LOADS	0.00	125%	0.00
TYPE "R": RECEPTACLES (FIRST 10KVA)	5.32	100%	5.32
TYPE "R": RECEPTACLES (OVER 10KVA)	0.00	50%	0.00
TYPE "H": HVAC / MECHANICAL LOADS	8.01	100%	8.01
TOTALS:	35.28		35.28

PHASE A: 8.15 KVA
PHASE B: 14.39 KVA
PHASE C: 13.14 KVA
119.92 MAX AMPS / PHASE

PANEL BLA

VOLTS: 120 / 208 V
PHASE: 3
WIRE: 4 W
BUSSING: 100A
POLES: 42P

* = BREAKER WITH LOCK-ON DEVICE

MAIN BRKR: MLO
FEEDER: SEE SCHEDULE
CONDUIT: SEE SCHEDULE
MOUNTED: SURFACE
AIC RATING: 42,000

LOAD DESCRIPTION	TYPE	A	B	C	BRKR.	CKT.	CKT.	BRKR.	A	B	C	TYPE	LOAD DESCRIPTION
FIRE ALARM CONTROL PANEL FACP	M	0.20			20/1 *	1	2	20/1	0.40			M	SERVICE ELEVATOR CAB LTS
RECEPT-ELECT ROOM	R		0.36		20/1	3	4	20/1		0.20		M	SERVICE ELEVATOR CONTROLS
VAV TRANSFORMER PANEL	H			0.20	20/1	5	6	20/1			0.72	R	RECEPT-SERV ELEV MACH RM, PIT
DOCK OFFICE ELECT HEATER	H	1.50			20/1	7	8	20/1	0.40			M	ELEVATOR CAB LTS
SPARE					20/1	9	10	20/1		0.20		M	ELEVATOR CONTROLS
SPARE					20/1	11	12	20/1			1.20	M	ELEVATOR MACH RM, PIT
SPARE					20/1	13	14	20/1	1.00			M	SUMP PUMP-ELEVATOR
SPARE					20/1	15	16	20/1		1.00		H	SUMP PUMP-SERVICE ELEVATOR
SPARE					20/1	17	18	20/1			0.87	H	BOILER B-1 1/3 HP
SPARE					20/1	19	20	20/1	0.53			H	EXH FAN EF-8 1/6HP
SPARE					20/1	21	22	20/1		0.20		H	TEMPERATURE CONTROL PANEL
SPARE					20/1	23	24	20/1			0.20	H	VAV-1 & 2
SPACE						25	26	20/1	0.53			H	EXH FAN EF-8 1/6HP
SPACE						27	28	20/1					SPARE
SPACE						29	30	30/1			2.00	M	DOCK LEVELER
SPACE						31	32	15/3	0.50			H	PUMP P-1 1HP
SPACE						33	34			0.50		H	PUMP P-1 1HP
PUMP SE-1 1HP	H			0.83	15/2	35	36				0.50	H	PUMP P-1 1HP
PUMP SE-1 1HP	H	0.83				37	38	15/3	0.50			H	PUMP P-2 1HP
PUMP SE-2 1HP	H		0.83		15/2	39	40			0.50		H	PUMP P-2 1HP
PUMP SE-2 1HP	H			0.83		41	42				0.50	H	PUMP P-2 1HP
		2.53	1.19	1.66					3.86	2.60	5.99		

DEMAND LOAD SUMMARY	CONN. KVA	DEMAND FACTOR	DEMAND KVA
TYPE "M": NON-CONTINUOUS / MISC. LOADS	4.60	100%	4.60
TYPE "L": LIGHTING / CONTINUOUS LOADS	0.00	125%	0.00
TYPE "R": RECEPTACLES (FIRST 10KVA)	1.08	100%	1.08
TYPE "R": RECEPTACLES (OVER 10KVA)	0.00	50%	0.00
TYPE "H": HVAC / MECHANICAL LOADS	12.35	100%	12.35
TOTALS:	18.03		18.03

PHASE A: 6.39 KVA
PHASE B: 3.79 KVA
PHASE C: 7.85 KVA
65.42 MAX AMPS / PHASE

PANEL 1LB

VOLTS: 120 / 208 V
PHASE: 3
WIRE: 4 W
BUSSING: 100A
POLES: 42P

MAIN BRKR: MLO
FEEDER: SEE SCHEDULE
CONDUIT: SEE SCHEDULE
MOUNTED: SURFACE
AIC RATING: 42,000

LOAD DESCRIPTION	TYPE	A	B	C	BRKR.	CKT.	CKT.	BRKR.	A	B	C	TYPE	LOAD DESCRIPTION
EWH-1	H	3.00			40/3	1	2	50/2	2.05			H	EWH-2
EWH-1	H		3.00			3	4			2.05		H	EWH-2
EWH-1	H			3.00		5	6	20/1					SPARE
EWH-1HEAT TRACE	H	1.00			15/2	7	8	20/1					SPARE
EWH-1HEAT TRACE	H		1.00			9	10	20/1					SPARE
SPARE					20/1	11	12	20/1					SPARE
SPARE					20/1	13	14	20/1					SPARE
SPARE					20/1	15	16	20/1					SPARE
SPARE					20/1	17	18	20/1					SPARE
SPARE					20/1	19	20	20/1					SPARE
SPARE					20/1	21	22	20/1					SPARE
SPARE					20/1	23	24	20/1					SPARE
SPACE						25	26						SPACE
SPACE						27	28						SPACE
SPACE						29	30						SPACE
SPACE						31	32						SPACE
SPACE						33	34						SPACE
SPACE						35	36						SPACE
SPACE						37	38						SPACE
SPACE						39	40						SPACE
SPACE						41	42						SPACE
		4.00	4.00	3.00					2.05	2.05	0.00		

DEMAND LOAD SUMMARY	CONN. KVA	DEMAND FACTOR	DEMAND KVA
TYPE "M": NON-CONTINUOUS / MISC. LOADS	0.00	100%	0.00
TYPE "L": LIGHTING / CONTINUOUS LOADS	0.00	125%	0.00
TYPE "R": RECEPTACLES (FIRST 10KVA)	0.00	100%	0.00
TYPE "R": RECEPTACLES (OVER 10KVA)	0.00	50%	0.00
TYPE "H": HVAC / MECHANICAL LOADS	0.00	100%	0.00
TOTALS:	0.00		0.00

PHASE A: 6.05 KVA
PHASE B: 6.05 KVA
PHASE C: 3.00 KVA
50.42 MAX AMPS / PHASE

O'MAHONY & MYER
ELECTRICAL and LIGHTING DESIGN
4340 REDWOOD HWY., SUITE 245
SAN RAFAEL, CALIFORNIA 94903
(415) 492-0420/FAX (415) 479-9662
www.ommconsulting.com

DIABLO VALLEY COLLEGE
NEW BOOKSTORE

321 GOLF CLUB RD.
PLEASANT HILL, CALIFORNIA

REGISTERED PROFESSIONAL ENGINEER
No.14738
Exp. 6/07
ELECTRICAL
STATE OF CALIFORNIA

DATE: 23 JULY, 2004

REVISIONS:

BID SET

SHEET TITLE:
PANEL SCHEDULES

IDENTIFICATION STAMP
DIVISION OF THE STATE ARCHITECT
105925
APPL 01
AC LE FLS EO SS A1
DATE: 5-12-04 JUL 26 2004

BLDG. ID: 098
ID CODE: 312098-109.01-A

DRAWN BY: TV
CHECKED BY: PC
JOB NO: 203066

SHEET
E6.1

DIABLO_VALLEY_COLLEGE_BOOKSTORE-203066

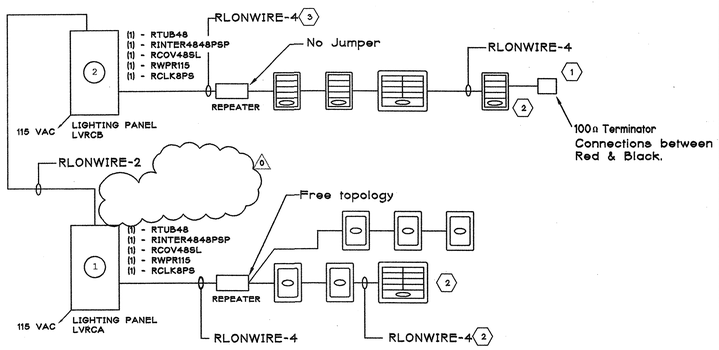

NOTES

1. The 100 ohms terminators will connect between RED & BLACK terminals on the last switch on the floor (as indicated in the drawing). NOT INCLUDED IN BOM.
2. RS6PS2 Programmable switch, see plans for total number or switches included in BOM.
3. RLONWIRE-2 & RLONWIRE-4 Dataline can be installed up to 1,500' before a repeater will be required. Maximum of 50 QE programmable switches can be installed in one network. Maximum number of panels per network is 30. If more than 15 dataline switches are connected to one panel, add an additional RTx transformer for each group of 15 switches. (x = 1 for 120V; x = 2 for 277V)

LOW VOLTAGE LIGTING CONTROL SINGLE LINE DIAGRAM

3 / E6.2

SCALE: NONE
FILE: L:\

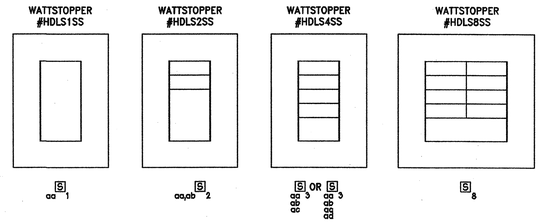

TYPICAL WALL SWITCH CONFIGURATIONS

1 / E6.2

SCALE: NONE
FILE: L:\

TYPICAL 48-RELAY CAPACITY
SMARTWIRED SWITCHING SYSTEM PANEL

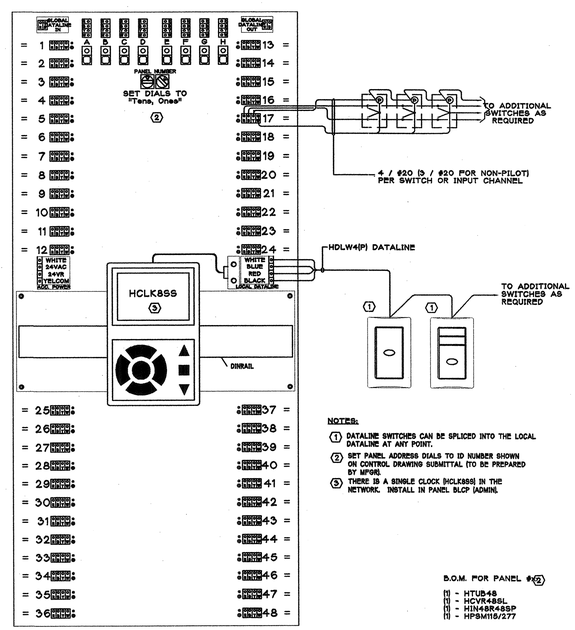

NOTES:

1. DATALINE SWITCHES CAN BE SPLICED INTO THE LOCAL DATALINE AT ANY POINT.
2. SET PANEL ADDRESS DIALS TO ID NUMBER SHOWN ON CONTROL DRAWING SUBMITTAL (TO BE PREPARED BY MFGR).
3. THERE IS A SINGLE CLOCK (HCLK8SS) IN THE NETWORK. INSTALL IN PANEL BLCP (ADMIN).

B.O.M. FOR PANEL #2

(1) - HTUB48
(1) - HCVR48SL
(1) - HIN48R48SP
(1) - HPSM115/277

SMARTWIRED SWITCHING SYSTEM PANEL DETAIL

2 / E6.2

SCALE: NONE
FILE: L:\

LOW VOLTAGE RELAY LIGHTING CONTROL PANEL - LVRCA

ZONE/SWITCH DESIGNATION	RELAY NO.	LINE VOLTAGE CIRCUIT	LOAD VA	ROOM NAME / FIXTURE TYPE	MASTER SWITCH ZONE GROUP	NOTES	ASTRO DIAL
ea	1	1HA-5	1597	SITE BOLLARDS 'A'	ML1, ML2	3	
eb	2	1HA-5	436	SITE BOLLARDS 'B'	ML1, ML2	4	
ec	3	1HA-5	110	TREE UPLIGHTS	ML1, ML2	3	
ed	4	1HA-9	1231	LOADING DOCK			
ee	5	1HA-9	436	TRASH ENCLOSURE			
ef	6	1HA-3	2725	EXTERIOR CANOPIES	ML1, ML2	3	
eg	7	1HA-3	430	ENTRY CANOPY DOWNLIGHTS	ML1, ML2	3	
eh	8	1HA-3	282	ENTRY CANOPY UPLIGHTS	ML1, ML2	4	
ej	9	1HA-2	330	FAYADE UPLIGHTS	ML1, ML2	3	
ek	10	1LA-20	300	DOCK LIGHT			
el	11	1HA-9	436	SECURITY DOCK LIGHTS	ML1, ML2	4	
em	12			SPARE			
en	13			SPARE			
aa	14	1HA-1	962	CORRIDOR			
ab	15	1HA-1	148	SECURE STORAGE			
ac	16			SPARE			
ad	17			SPARE			
ae	18			SPARE			
af	19			SPARE			
ag	20			SPARE			
ah	21			SPARE			
ai	22			SPARE			
ba	23	1HA-4	815	CONVENIENCE STORE GENERAL			
bb	24	1LA-6	330	CONVENIENCE STORE TRACK			
bc	25	1LA-18	400	CASEWORK			
bd	26	1HA-4	128	CAFY PENDANT			
be	27	1LA-6	404	CAFY ACCENT			
bf	28	1HA-1	561	SERVICE			
bg	29	1HA-1	148	COUNTING			
bh	30	1HA-1	148	COUNTING			
bi	31	1HA-1	185	BUYBACK			
bj	32	1HA-1	185	BUYBACK			
bk	33	1LA-8	1500	TRACK	mg, ML1	5	
bk	34	1LA-10	1500	TRACK	mg, ML1	5	
bk	35	1LA-12	1500	TRACK	mg, ML1	5	
bk	36	1LA-14	1500	TRACK	mg, ML1	5	
bl	37			SPARE			
bm	38	1LA-2	500	CUSTOMER SERVICE ACCENT	mg, ML1	5	
bm	39	1LA-22	218	LOW VOLTAGE STRIP LIGHTS	mg, ML1	5	
bn	40	1LA-2	218	CUSTOMER SERVICE POLES	mg, ML1	5	
bo	41	1HA-2	86	BACK DOOR	mg, ML1	5	
bp	42	1HA-2	220	BRIDGE DOWNLIGHTS	mg, ML1	5	
bq	43	1HA-2	165	BRIDGE PENDANTS	mg, ML1	5	
br	44	1LA-4	1140	PERIMETER ACCENT	mg, ML1	5	
bs	45			SPARE			
bt	46			SPARE			
bu	47			SPARE			
bv	48			SPARE			

NOTES:
1. ALL LOCAL SWITCH ZONE, MASTER, TIMECLOCK AND PHOTOCELL INPUTS TO RELAYS SHALL BE "SOFTWIRED" VIA PROGRAMMABLE SYSTEM SWITCHES.
2. REMOTE SWITCHES WITH PILOT LIGHTS TO BE LOCATED IN LIGHTING CONTROL STATIONS WHERE DESIGNATED. SEE DETAILS AND ENGRAVING SCHEDULES.
3. PROVIDE AN ASTRO-DIAL MASTER CHANNEL; ASTRO-ON, TIMECLOCK-OFF. RELAYS NOTED SHALL BE AUTOMATICALLY CONTROLLED BY THE RESPECTIVE ASTRO CHANNEL FOR EXTERIOR CONTROL.
4. PROVIDE AN ASTRO-DIAL MASTER CHANNEL; ASTRO-ON, ASTRO-OFF. RELAYS NOTED SHALL BE AUTOMATICALLY CONTROLLED BY THE RESPECTIVE ASTRO CHANNEL FOR EXTERIOR CONTROL.
5. MASTER SWITCH 'ma' SHALL BE WIRED TO TURN LIGHTS 'ON' ONLY.

LOW VOLTAGE RELAY LIGHTING CONTROL PANEL - LVRCB

ZONE/SWITCH DESIGNATION	RELAY NO.	LINE VOLTAGE CIRCUIT	LOAD VA	ROOM NAME / FIXTURE TYPE	MASTER SWITCH ZONE GROUP	NOTES	ASTRO DIAL
ca	1	1HA-6	936	ENTRY UPLIGHTS	mg, ML1	5	
cb	2	1HA-6	876	COVE	mg, ML1	5	
cc	3	1HA-6	222	PENDANT	mg, ML1	5	
cd	4	1HA-6	222	PENDANT	mg, ML1	5	
ce	5	1HA-6	74	SERVER			
cf	6	1HA-6	74	SERVER			
cg	7	1HA-8	175	SCONCES			
ch	8	1HA-8	629	OPEN OFFICE			
ci	9	1HA-8	629	OPEN OFFICE			
cj	10	1HA-8	74	MANAGER			
ck	11	1HA-8	74	MANAGER			
cl	12	1HA-8	444	BREAK/MEETING			
cm	13	1LA-6	30	BREAK/MEETING TASK			
cn	14	1HA-8	150	MEN			
co	15	1HA-8	172	MEN			
cp	16	1HA-8	150	WOMEN			
cq	17	1HA-8	172	WOMEN			
cr	18	1HA-2	1388	CORRIDOR & BRIDGE	mg, ML1	5	
cs	19	1HA-10	1147	NORTH PENDANT	mg, ML1	5	
ct	20	1HA-10	1147	NORTH PENDANT	mg, ML1	5	
cu	21	1HA-10	468	NORTH SKYLIGHT	mg, ML1	5	
cv	22	1HA-12	1075	MIDDLE PENDANT	mg, ML1	5	
cw	23	1HA-12	1075	MIDDLE PENDANT	mg, ML1	5	
cx	24	1HA-12	468	MIDDLE SKYLIGHT	mg, ML1	5	
cy	25	1HA-14	999	SOUTH PENDANT	mg, ML1	5	
cz	26	1HA-14	999	SOUTH PENDANT	mg, ML1	5	
da	27	1HA-14	468	SOUTH SKYLIGHT	mg, ML1	5	
db	28	1HA-6	876	COVE - NL OVERRIDE OFF			
dc	29	1HA-8	222	BREAK/MEETING			
dd	30			SPARE			
	31			SPARE			
	32			SPARE			
	33			SPARE			
	34			SPARE			
	35			SPARE			
	36			SPARE			
	37			SPARE			
	38			SPARE			
	39			SPARE			
	40			SPARE			
	41			SPARE			
	42			SPARE			
	43			SPARE			
	44			SPARE			
	45			SPARE			
	46			SPARE			
	47			SPARE			
	48			SPARE			

NOTES:
1. ALL LOCAL SWITCH ZONE, MASTER, TIMECLOCK AND PHOTOCELL INPUTS TO RELAYS SHALL BE "SOFTWIRED" VIA PROGRAMMABLE SYSTEM SWITCHES.
2. REMOTE SWITCHES WITH PILOT LIGHTS TO BE LOCATED IN LIGHTING CONTROL STATIONS WHERE DESIGNATED. SEE DETAILS AND ENGRAVING SCHEDULES.
3. PROVIDE AN ASTRO-DIAL MASTER CHANNEL; ASTRO-ON, TIMECLOCK-OFF.
4. PROVIDE AN ASTRO-DIAL MASTER CHANNEL; ASTRO-ON, ASTRO-OFF. RELAYS NOTED SHALL BE AUTOMATICALLY CONTROLLED BY THE RESPECTIVE ASTRO CHANNEL FOR EXTERIOR CONTROL.
5. MASTER SWITCH 'ma' SHALL BE WIRED TO TURN LIGHTS 'ON' ONLY.

O'MAHONY & MYER
ELECTRICAL and LIGHTING DESIGN
4340 REDWOOD HWY., SUITE 245
SAN RAFAEL, CALIFORNIA 94903
(415) 492-0420/FAX (415) 479-9662
www.ommconsulting.com

DIABLO VALLEY COLLEGE
NEW BOOKSTORE

321 GOLF CLUB RD.
PLEASANT HILL, CALIFORNIA

REGISTERED PROFESSIONAL ENGINEER
PETER K. COLEMAN
No. 14738
Exp. 6/07
ELECTRICAL
STATE OF CALIFORNIA

DATE: 23 JULY, 2004

REVISIONS:
0 REVISIONS- 23 JULY, 2004

BID SET

SHEET TITLE:
LOW VOLTAGE PANELS AND DETAILS

IDENTIFICATION STAMP
DIVISION OF THE STATE ARCHITECT
105925
APPL 01
AC LE FLS EO SS A1
DATE: 5-12-04 JUL 26 2004

BLDG. ID: 098
ID CODE: 312098-109.01-A

DRAWN BY: KK/TV/LC
CHECKED BY: PC
JOB NO: 203066

SHEET
E6.2

Jul 20, 2004 - 10:56am jkirk P:\2003\DIABLO_VALLEY_COLLEGE_BOOKSTORE-203066\CAD\E62-DVC_BOOKSTORE.DWG

DIABLO_VALLEY_COLLEGE_BOOKSTORE-203066

Jul 20, 2004 - 10:58am jkirk P:\2003\DIABLO_VALLEY_COLLEGE_BOOKSTORE-203066\CAD\E63-DVC_BOOKSTORE.DWG

FIRST FLOOR - TELEPHONE / DATA OUTLET SCHEDULE

OUTLETS	DATA JACKS	TELEPHONE JACKS	OUTLET TYPE WALL	OUTLET TYPE FLOOR	OUTLET TYPE OTHER	HOMERUN TO	REMARKS
F1	0	2	X			MDF	SECURITY PANEL
F2	4	0		X		MDF	
F3	3	1		X		MDF	
F4	3	1		X		MDF	
F5	3	1		X		MDF	
F6	3	1		X		MDF	
F7	3	1		X		MDF	
F8	3	1		X		MDF	
F9	3	1		X		MDF	
F10	3	1		X		MDF	
F11	3	1		X		MDF	
F12	3	1		X		MDF	
F13	3	1		X		MDF	
F14	3	1		X		MDF	
F15	3	1		X		MDF	
F16	3	1		X		MDF	
F17	3	1			X	MDF	INSTALL ON FURNITURE
F18	3	1			X	MDF	INSTALL ON FURNITURE
F19	3	1			X	MDF	INSTALL ON FURNITURE
F20	1	0	X			MDF	FOR WIRELESS USE
F21	1	1		X		MDF	
F22	1	1		X		MDF	
F23	1	1		X		MDF	
F24	1	1		X		MDF	
F25	1	1		X		MDF	
F26	1	1		X		MDF	
F27	1	1		X		MDF	
F28	4	1		X		MDF	
F29	1	1		X		MDF	
F30	1	1		X		MDF	
F31	1	0			X	MDF	FOR WIRELESS USE. INSTALL ON COLUMN
F32	1	0			X	MDF	FOR WIRELESS USE. INSTALL ON COLUMN
F33	1	0			X	MDF	FOR WIRELESS USE. INSTALL ON COLUMN
F34	1	0			X	MDF	INSTALL ON COLUMN.
F35	1	1			X	MDF	INSTALL ON COLUMN.
F36	1	1			X	MDF	INSTALL ON COLUMN.
F37	1	1			X	MDF	INSTALL ON COLUMN.
F38	1	1			X	MDF	INSTALL ON COLUMN.
F39	3	1	X			MDF	
F40	3	1	X			MDF	
F41	3	1	X			MDF	
F42	3	1	X			MDF	
F43	3	1	X			MDF	
F44	3	1	X			MDF	
F45	3	1	X			MDF	
F46	3	1	X			MDF	
F47	3	1	X			MDF	
F48	1	1		X		MDF	
F49	1	1		X		MDF	
F50	1	0	X			MDF	FOR WIRELESS USE.
F51	1	0	X			MDF	FOR WIRELESS USE.
F52	3	1	X			MDF	
F53	3	1	X			MDF	
F54	3	1	X			MDF	
F55	3	1	X			MDF	
F56	3	1	X			MDF	
F57	3	1	X			MDF	
F58	0	1	X			MDF	
F59	1	0	X			MDF	FOR WIRELESS USE.
F60	1	1	X			MDF	LIGHTING CONTROLS.
F61	1	0	X			MDF	FOR WIRELESS USE.
F62	1	0	X			MDF	FOR WIRELESS USE.
F63	1	1	X			MDF	
F64	3	1	X			MDF	
F65	3	1	X			MDF	
F66	3	1	X			MDF	
F67	3	1	X			MDF	
F68	0	2	X			MDF	ELEVATOR #2 MACHINE ROOM
F69	1	0	X			MDF	
F70	1	0	X			MDF	
F71	1	0	X			MDF	
F72	1	0	X			MDF	
F73	1	0	X			MDF	
F74	1	1	X			MDF	TEMPERTURE CONTROL PANEL
TOTAL	149	60					

SECOND FLOOR - TELEPHONE / DATA OUTLET SCHEDULE

OUTLETS	DATA JACKS	TELEPHONE JACKS	OUTLET TYPE WALL	OUTLET TYPE FLOOR	OUTLET TYPE OTHER	HOMERUN TO	REMARKS
S1	0	1	X			MDF	
S2	3	1	X			MDF	
S3	3	1	X			MDF	
S4	2	0		X		MDF	
S5	3	1	X			MDF	
S6	3	1	X			MDF	
S7	3	1	X			MDF	
S8	4	0		X		MDF	
S9	3	1	X			MDF	
S10	3	1	X			MDF	
S11	3	1			X	MDF	INSTALL ON FURNITURE
S12	3	1			X	MDF	INSTALL ON FURNITURE
S13	3	1			X	MDF	INSTALL ON FURNITURE
S14	3	1			X	MDF	INSTALL ON FURNITURE
S15	3	1			X	MDF	INSTALL ON FURNITURE
S16	3	1			X	MDF	INSTALL ON FURNITURE
S17	3	1			X	MDF	INSTALL ON FURNITURE
S18	3	1			X	MDF	INSTALL ON FURNITURE
S19	1	0	X			MDF	FOR WIRELESS USE
S20	1	0	X			MDF	FOR WIRELESS USE
S21	1	1	X			MDF	
TOTAL	54	17					

BASEMENT - TELEPHONE / DATA OUTLET SCHEDULE

OUTLETS #	DATA JACKS	TELEPHONE JACKS	OUTLET TYPE WALL	OUTLET TYPE FLOOR	OUTLET TYPE OTHER	HOMERUN TO	REMARKS
B1	3	1	X			MDF	
B2	3	1	X			MDF	
B3	1	0	X			MDF	FOR WIRELESS USE.
B4	0	1	X			MDF	
B5	1	1	X			MDF	TEMPERATURE CONTROL PANEL
B6	0	2	X			MDF	ELEVATOR #3 MACHINE ROOM
B7	2	1	X			MDF	
B8	0	2	X			MDF	ELEVATOR #1 MACHINE ROOM
B9	1	1	X			MDF	AT MSB FOR REMOTE METERING
B10	0	2	X			MDF	FIRE ALARM PANEL
TOTAL	11	12					

GENERAL TELEPHONE/DATA OUTLET SCHEDULE NOTES

1. PROVIDE AND INSTALL ALL HOMERUN CAT-6 CABLES IN CONDUIT TO THE MDF/TELEPHONE PUNCH DOWN BLOCKS AS INDICATED ON THE TELEPHONE/DATA SCHEDULES.
2. SEE 1/E5.3 & 2/E5.3 FOR TELEPHONE/DATA TERMINATIONS AND FACE PLATE CONFIGURATION.
3. OUTLET NUMBERS ARE AS FOLLOWS: -
   B = BASEMENT
   F = FIRST FLOOR
   S = SECOND FLOOR
4. TELEPHONE CABLE HOMERUNS SHALL BE TERMINATED ON THE 110 BLOCKS AND THE DATA CABLE HOMERUNS SHALL BE TERMINATED ON THE CAT 6 PATCH PANELS.

NUMBERED SHEET NOTES

1. PROVIDE AND INSTALL 3/4" MARINE GRADE PLYWOOD (FIRE TREATED) BACKBOARD, INSTALLED FULL HEIGHT OF WALL'S AND PAINTED. TYPICAL ALL WALLS IS IN SERVER ROOM AS INDICATED.
2. PROVIDE AND INSTALL MDF RACKS SEE 2/E5.3.
3. PROVIDE AND INSTALL TELEPHONE WALL MOUNTED 110 BLOCK FRAME, SEE 2/E5.3.
4. TELEPHONE SWITCH OR NODE EQUIPMENT, SEE 2/E5.3.
5. PROVIDE AND INSTALL GROUND BUS CABINET SEE 4/E7.5. PROVIDE AND INSTALL 1#6G IN 3/4" CONDUIT, TO GROUND BUS IN MAIN SWITCH BOARD.
6. PROVIDE AND INSTALL LADDER RACK, CHATSWORTH #11275-018 OR EQUAL. PROVIDE AND INSTALL ALL REQUIRED ACCESSORIES AND SUPPORTS. SUBMIT SHOP DRAWINGS OF CABLE LADDER LAYOUTS FOR APPROVAL.
7. PROVIDE AND INSTALL 18" VERTICAL CABLE LADDER DROPS TO FLOOR.
8. PROVIDE AND INSTALL 18" VERTICAL CABLE LADDER DROP TO THE EQUIPMENT/TERMINAL BLOCKS.
9. PROVIDE AND INSTALL A 1-1/4"CONDUIT UP TO THE ROOF FOR FUTURE TV USE. PROVIDE AND INSTALL WEATHERHEAD ON CONDUIT ON THE ROOF. SEE 1/E3.7 FOR CONDUIT STUB LOCATION ON ROOF.

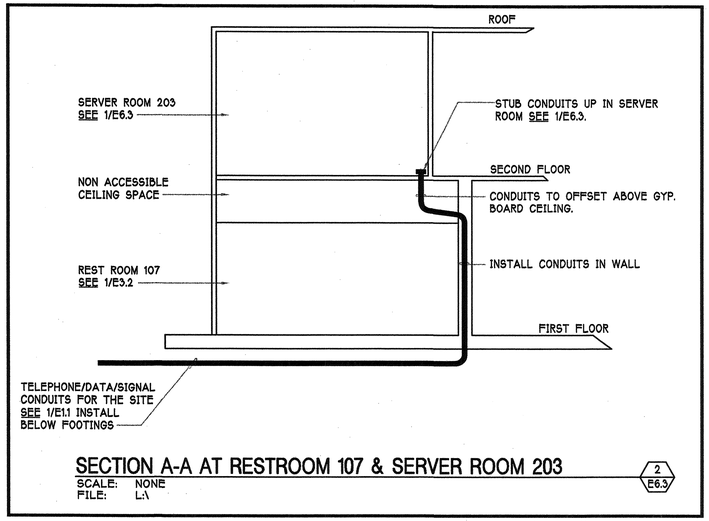

SECTION A-A AT RESTROOM 107 & SERVER ROOM 203 (2/E6.3)

SCALE: NONE
FILE: L:\

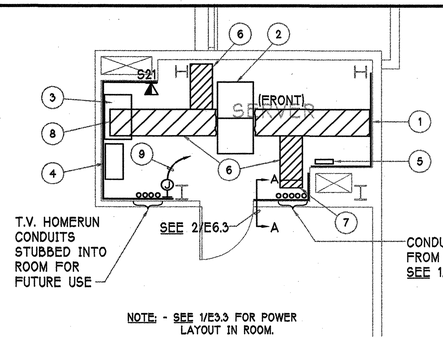

NOTE: - SEE 1/E3.3 FOR POWER LAYOUT IN ROOM.

SERVER ROOM PARTIAL PLAN (1/E6.3)

SCALE: 1/4"=1'-0"
FILE: L:\

O'MAHONY & MYER
ELECTRICAL and LIGHTING DESIGN
4340 REDWOOD HWY., SUITE 245
SAN RAFAEL, CALIFORNIA 94903
(415) 492-0420/FAX (415) 479-9662
www.ommconsulting.com

DIABLO VALLEY COLLEGE
NEW BOOKSTORE

321 GOLF CLUB RD.
PLEASANT HILL, CALIFORNIA

REGISTERED PROFESSIONAL ENGINEER PATRICK J. COLEMAN No.14738 Exp. 6/07 ELECTRICAL STATE OF CALIFORNIA

DATE: 23 JULY, 2004

REVISIONS:

BID SET

SHEET TITLE:
TELEPHONE/ DATA SCHED. AND PARTIAL PLANS

IDENTIFICATION STAMP
DIVISION OF THE STATE ARCHITECT
105925
APPL 01
AC LE FLS EO SS M
DATE: 5-12-04 JUL 26 2004

BLDG. ID: 098
ID CODE: 312098-109.01-A

DRAWN BY: KK/TV
CHECKED BY: PC
JOB NO: 203066

SHEET E6.3

DIABLO_VALLEY_COLLEGE_BOOKSTORE-203066

Jul 20, 2004 - 11:32am jkirk P:\2003\DIABLO_VALLEY_COLLEGE_BOOKSTORE-203066\CAD\E71-DVC_BOOKSTORE.DWG

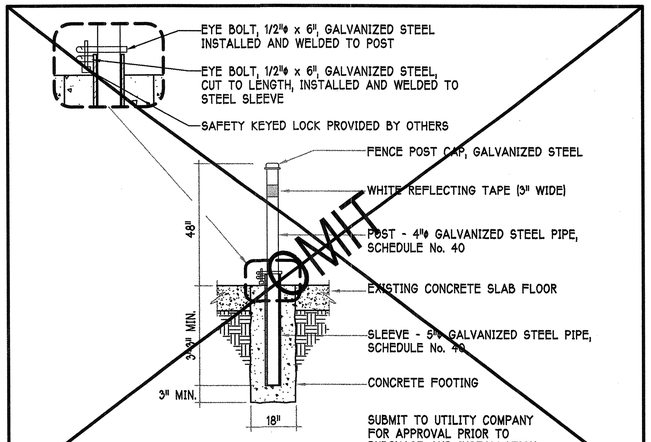

REMOVABLE LOCKABLE BOLLARD

SCALE: NONE
FILE: L:\OPWRDET\RELOCBLD

7 / E7.1

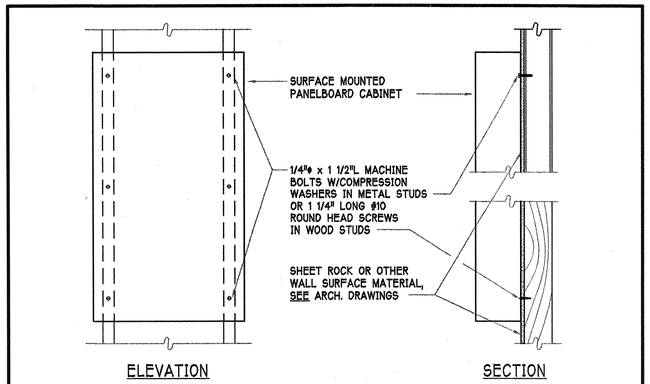

NOTES: MAXIMUM PANELBOARD WEIGHT: 150 POUNDS.

SURFACE PANELBOARD MOUNTING

SCALE: NONE
FILE: N:\MONTHLY\OEQUPMTG\SUPNLMTG

4 / E7.1

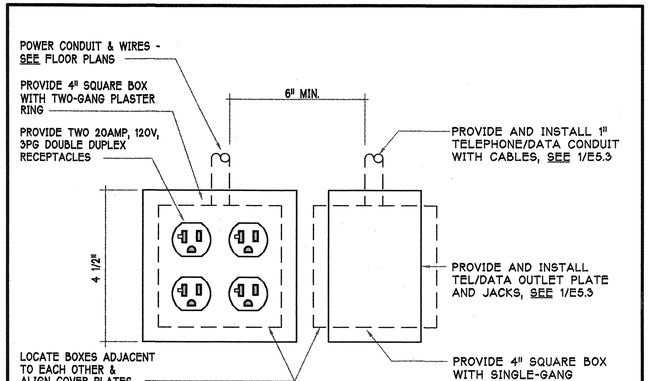

TYPICAL POWER & TELE / DATA OUTLET ELEVATION ( )

SCALE: NONE
FILE: L:\POWER\PDWIRE\PPDW1002 (MOD.)

1 / E7.1

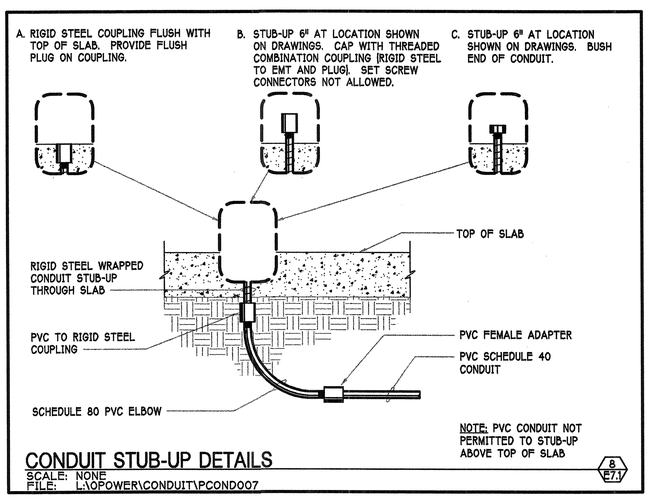

CONDUIT STUB-UP DETAILS

SCALE: NONE
FILE: L:\OPOWER\CONDUIT\PCOND007

8 / E7.1

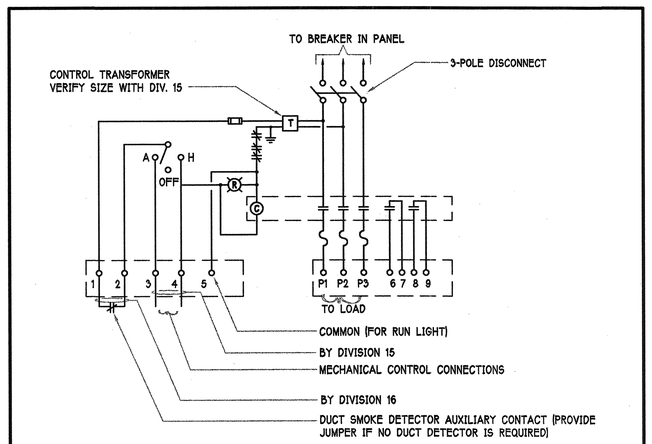

MOTOR STARTER / CONTROL DIAGRAM - 3ø EQUIPMENT

SCALE: NONE
FILE: L:\POWER\STARTERS\PSTAR002 (MOD)

5 / E7.1

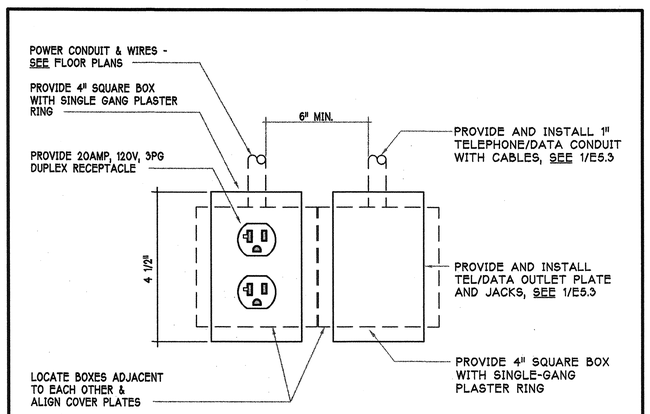

TYPICAL POWER, TELE / DATA OUTLET ELEVATION ( )

SCALE: NONE
FILE: L:\POWER\PDWIRE\PPDW1001 (MOD.)

2 / E7.1

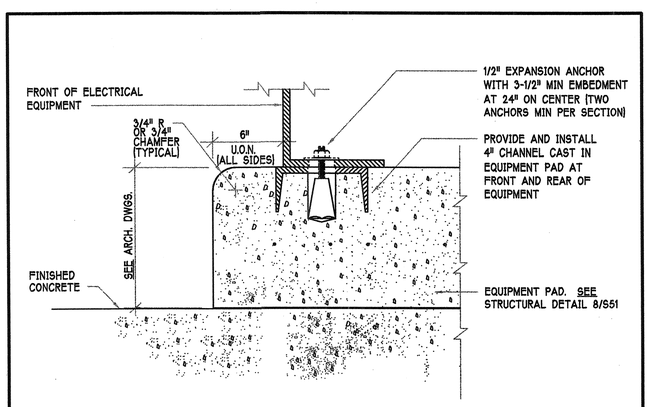

ELECTRICAL HOUSEKEEPING PAD

SCALE: NONE
FILE: L:\POWER\PADS\PPADS015

9 / E7.1

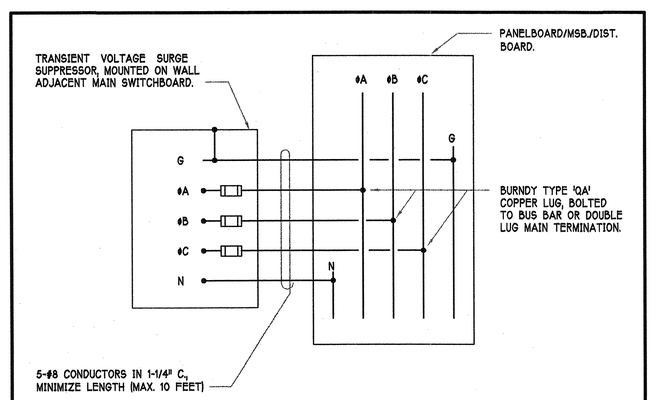

SURGE SUPPRESSOR CONNECTION DIAGRAM AT 'MSB'

SCALE: NONE
FILE: L:\POWER\SURGE\PSURG001 (MOD.)

6 / E7.1

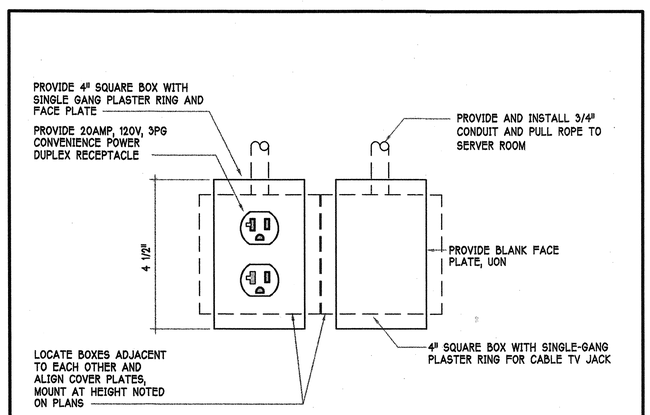

TYPICAL POWER AND CABLE TV OUTLET ELEVATION ( )

SCALE: NONE
FILE: L:\POWER\PVIDEO\PPVIS001 (MOD.)

3 / E7.1

O'MAHONY & MYER
ELECTRICAL and LIGHTING DESIGN
4340 REDWOOD HWY., SUITE 245
SAN RAFAEL, CALIFORNIA 94903
(415) 492-0420/FAX (415) 479-9662
www.ommconsulting.com

DIABLO VALLEY COLLEGE

DIABLO VALLEY COLLEGE NEW BOOKSTORE

321 GOLF CLUB RD.
PLEASANT HILL, CALIFORNIA

REGISTERED PROFESSIONAL ENGINEER
PETER J. COLENDER
No.14738
Exp. 6/07
ELECTRICAL
STATE OF CALIFORNIA

DATE: 23 JULY, 2004

REVISIONS:

BID SET

SHEET TITLE:
DETAILS

IDENTIFICATION STAMP
DIVISION OF THE STATE ARCHITECT
105925
APPL 01
AC LE FLS EO SS AI
DATE: 5-12-04 JUL 26 2004

BLDG. ID: 098
ID CODE: 312098-109.01-A

DRAWN BY: KK/TV
CHECKED BY: PC
JOB NO: 203066

SHEET
E7.1

DIABLO_VALLEY_COLLEGE_BOOKSTORE-203066

Jul 20, 2004 - 11:33am jkirk P:\2003\DIABLO_VALLEY_COLLEGE_BOOKSTORE-203066\CAD\E72-DVC_BOOKSTORE.DWG

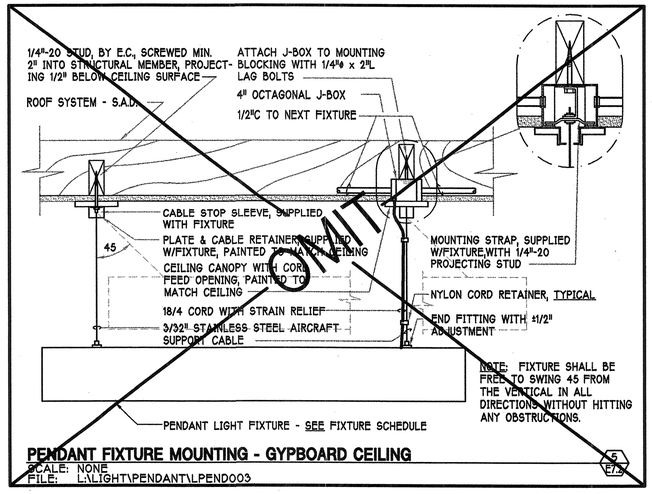

PENDANT FIXTURE MOUNTING - GYPBOARD CEILING

SCALE: NONE
FILE: L:\LIGHT\PENDANT\LPEND003

5 / E7.2

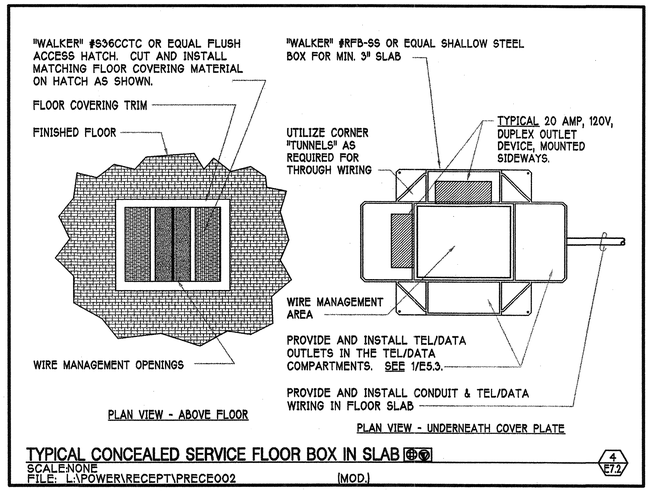

TYPICAL CONCEALED SERVICE FLOOR BOX IN SLAB

SCALE:NONE
FILE: L:\POWER\RECEPT\PRECE002 (MOD.)

4 / E7.2

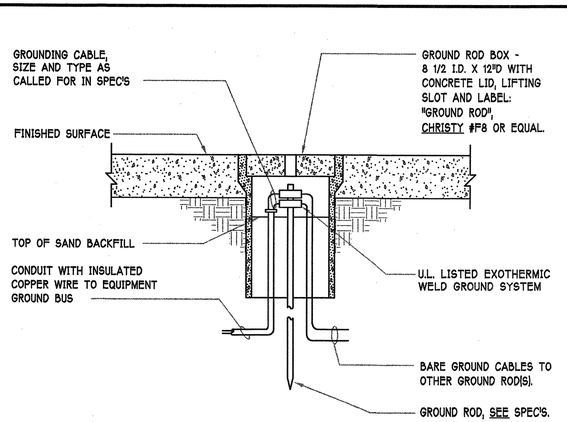

GROUND ROD INSTALLATION

SCALE: NONE
FILE: L:\POWER\GROUND\PGROU001

2 / E7.2

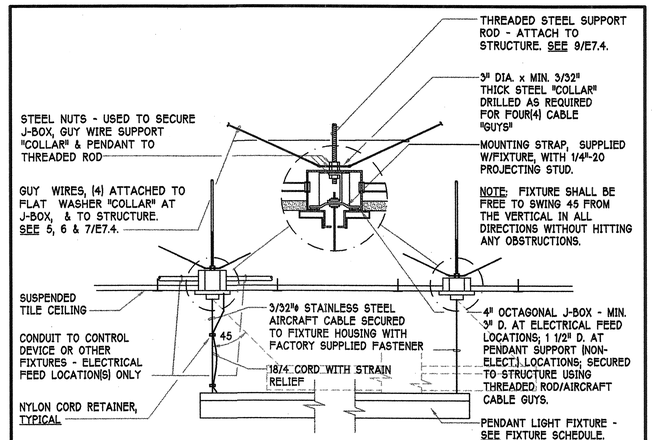

PENDANT FIXTURE MOUNTING - T-BAR/SUSPENDED CEILING

SCALE: NONE
FILE: L:\LIGHT\PENDANT\PEND019

6 / E7.2

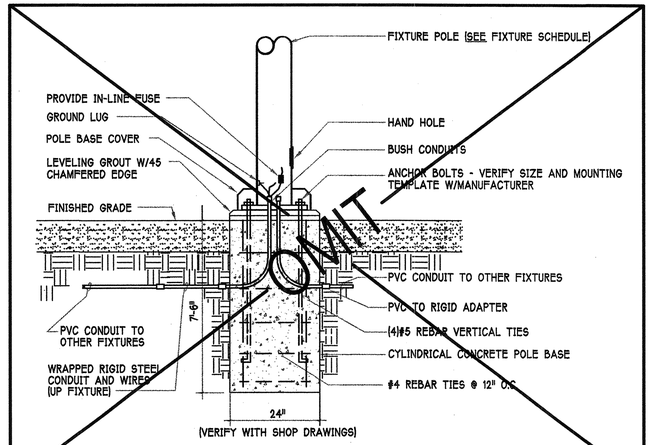

TYPICAL POLE BASE AT SIDEWALKS

SCALE: NONE
FILE: L:\LIGHT\POLEBASE\LPOLE003 (MOD.)

3 / E7.2

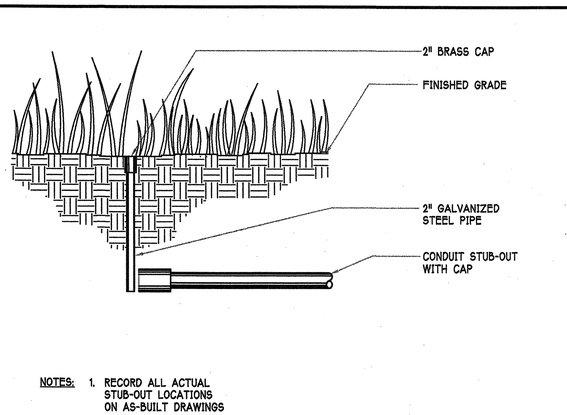

NOTES: 1. RECORD ALL ACTUAL STUB-OUT LOCATIONS ON AS-BUILT DRAWINGS

CONDUIT STUB-OUT

SCALE: NONE
FILE: L:\POWER\CONDUIT\PCOND005

2 / E7.2

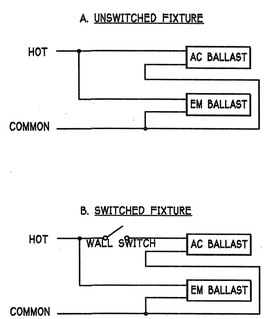

EMERGENCY BALLAST WIRING DIAGRAM

SCALE: NONE
FILE: L:\DIAGRAM\EMBALAST

7 / E7.2

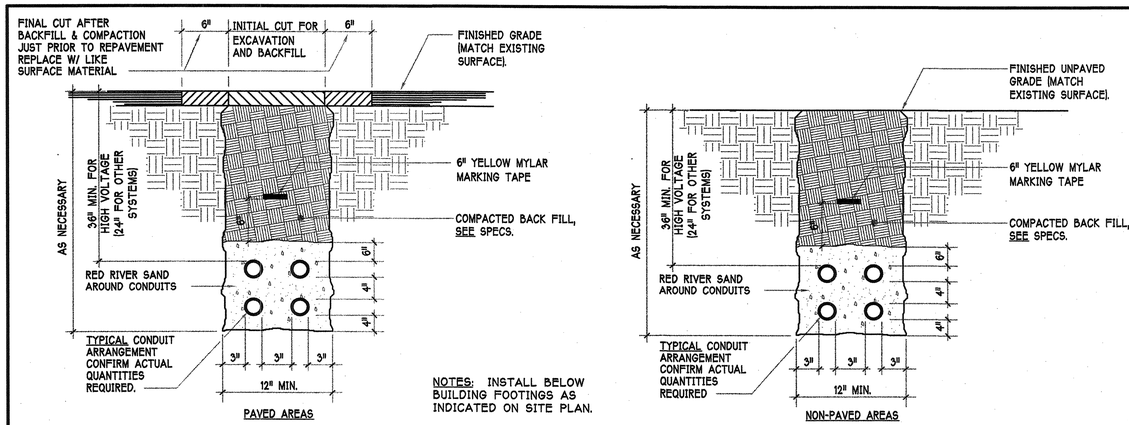

TYPICAL TRENCH SECTIONS

SCALE: NONE
FILE: L:\POWER\TRENCH\PTRENO05 (MOD.)

3 / E7.2

O'MAHONY & MYER
ELECTRICAL and LIGHTING DESIGN
4340 REDWOOD HWY., SUITE 245
SAN RAFAEL, CALIFORNIA 94903
(415) 492-0420/FAX (415) 479-9662
www.ommconsulting.com

DIABLO VALLEY COLLEGE
NEW BOOKSTORE

321 GOLF CLUB RD.
PLEASANT HILL, CALIFORNIA

REGISTERED PROFESSIONAL ENGINEER
PAUL C. CORDER
No.14738
Exp. 6/07
ELECTRICAL
STATE OF CALIFORNIA

DATE: 23 JULY, 2004

REVISIONS:

BID SET

SHEET TITLE:
DETAILS

IDENTIFICATION STAMP
DIVISION OF THE STATE ARCHITECT
APPL 01 105925
AC LE FLS EO SS A1
DATE: 5-12-04 JUL 26 2004

BLDG. ID: 098
ID CODE: 312098-109.01-A

DRAWN BY: KK/TV/LC
CHECKED BY: PC
JOB NO: 203066

SHEET
E7.2

DIABLO_VALLEY_COLLEGE_BOOKSTORE-203066

Jul 20, 2004 - 11:33am jkirk P:\2003\DIABLO_VALLEY_COLLEGE_BOOKSTORE-203066\CAD\E73-DVC_BOOKSTORE.DWG

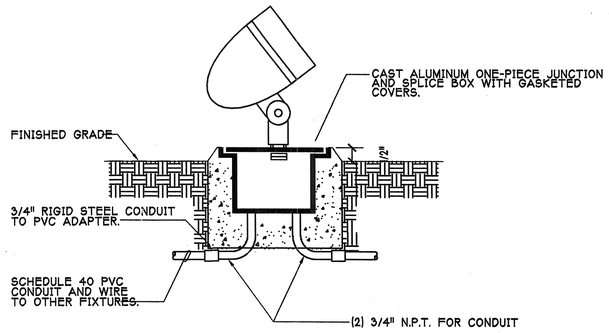

GROUND UPLIGHT FIXTURE MOUNTING DETAIL

SCALE: NONE
FILE: L:\LIGHT\GROUND\LGROU008

7 / E7.3

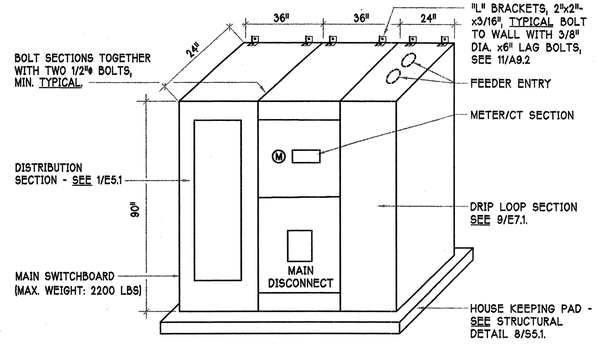

SWITCHBOARD 'MSB' ELEVATION

SCALE: NONE

4 / E7.3

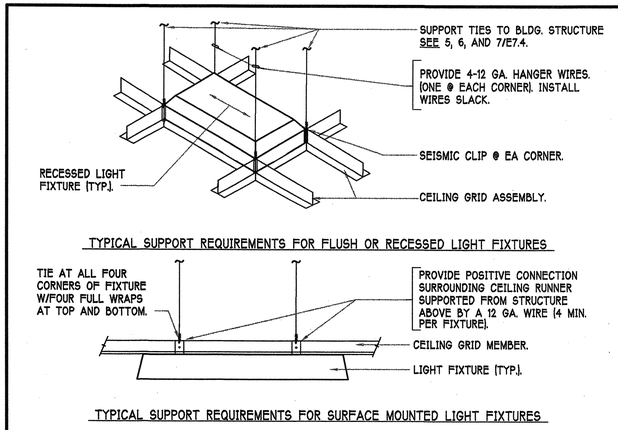

FIXTURE SUPPORT

SCALE: NONE
FILE: L:\LIGHT\RECESS\LRFCE002

1 / E7.3

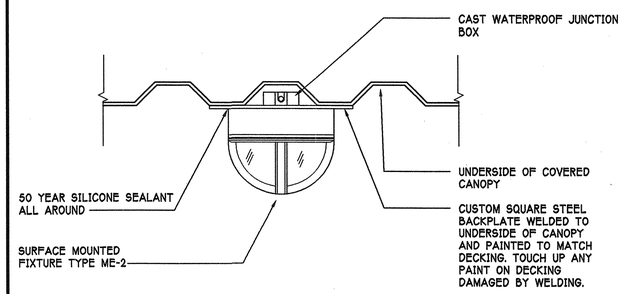

TYPICAL SURFACE MOUNTED FIXTURE IN CANOPIES

SCALE: NONE
FILE:

8 / E7.3

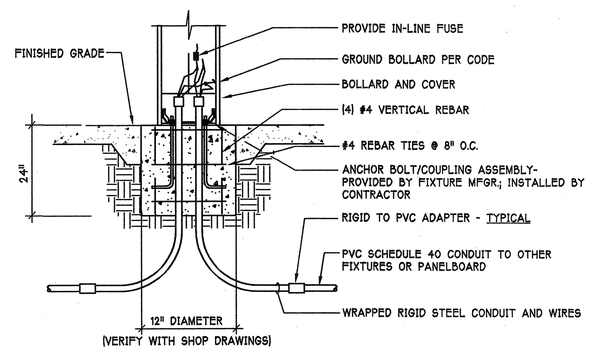

TYPICAL BOLLARD MOUNTING DETAIL AT PAVING

SCALE: NONE
FILE: L:\LIGHT\BOLLARD\LBOLL005

5 / E7.3

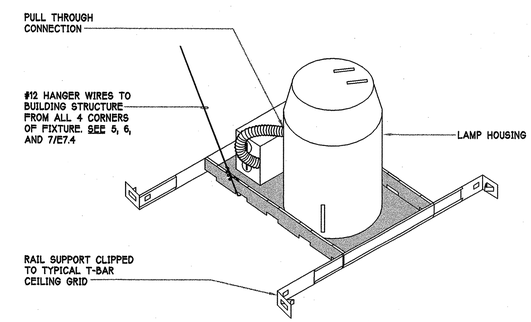

RECESSED CAN FIXTURE MOUNTING DETAIL

SCALE: NONE
FILE: L:\LIGHT\LRECE005

2 / E7.3

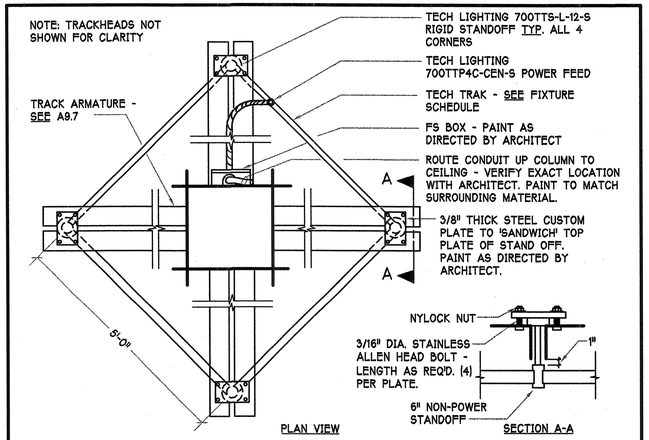

COLUMN MOUNTED TRACK ASSEMBLY

SCALE: NONE
FILE:

9 / E7.3

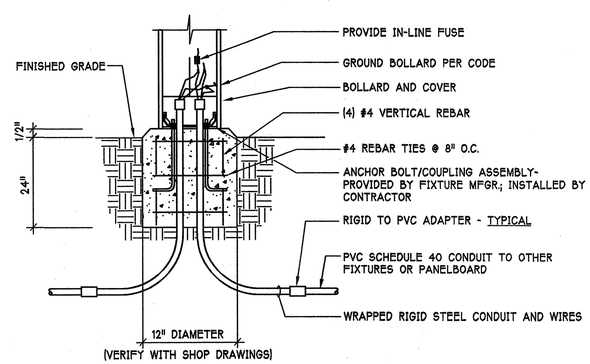

TYPICAL BOLLARD MOUNTING DETAIL AT PLANTING

SCALE: NONE
FILE: L:\LIGHT\BOLLARD\LBOLL005

6 / E7.3

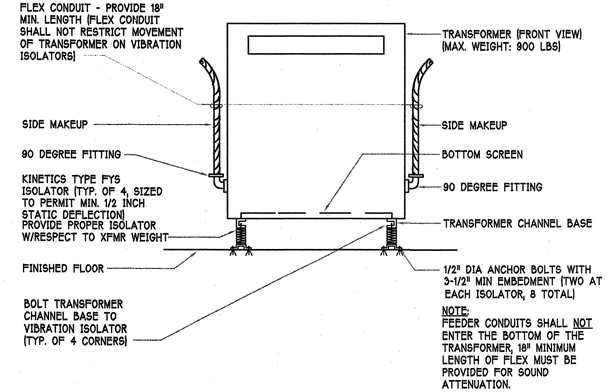

FLOOR MOUNTED TRANSFORMER MOUNTING DETAIL

SCALE: NONE
FILE: L:\POWER\PADS\PPADS009

3 / E7.3

O'MAHONY & MYER
ELECTRICAL and LIGHTING DESIGN
4340 REDWOOD HWY., SUITE 245
SAN RAFAEL, CALIFORNIA 94903
(415) 492-0420/FAX (415) 479-9662
www.ommconsulting.com

DIABLO VALLEY COLLEGE

DIABLO VALLEY COLLEGE NEW BOOKSTORE

321 GOLF CLUB RD.
PLEASANT HILL, CALIFORNIA

REGISTERED PROFESSIONAL ENGINEER
PAUL J. COLDEBANKER
No. 14738
Exp. 6/07
ELECTRICAL
STATE OF CALIFORNIA

DATE: 23 JULY, 2004

REVISIONS:

BID SET

SHEET TITLE:
DETAILS

IDENTIFICATION STAMP
DIVISION OF THE STATE ARCHITECT
105925
APPL 01
AC LE FLS EO SS AI
DATE: 5-12-04 JUL 26 2004

BLDG. ID: 098
ID CODE: 312098-109.01-A

DRAWN BY: KK/TV/LC
CHECKED BY: PC
JOB NO: 203066

SHEET
E7.3

DIABLO_VALLEY_COLLEGE_BOOKSTORE-203066

Jul 20, 2004 - 11:34am jkirk P:\2003\DIABLO_VALLEY_COLLEGE_BOOKSTORE-203066\CAD\E74-DVC_BOOKSTORE.DWG

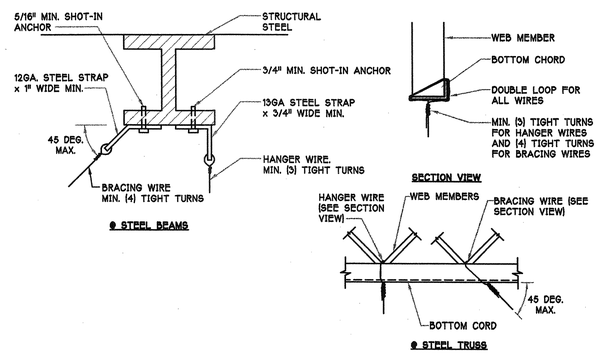

HANGER & BRACING WIRES AT STEEL FRAMING

SCALE: NONE

7 / E7.4

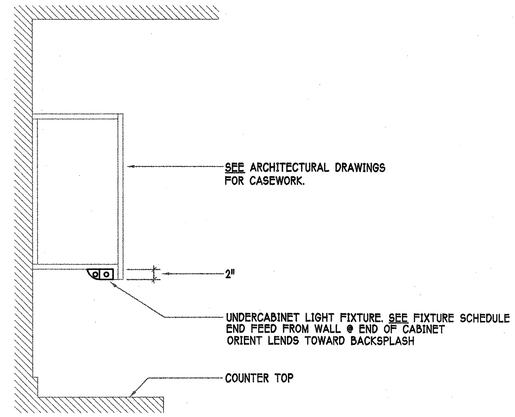

UNDER-CABINET FIXTURE MOUNTING

SCALE: NONE
FILE: L:\LIGHT\MISC\LMISC004

4 / E7.4

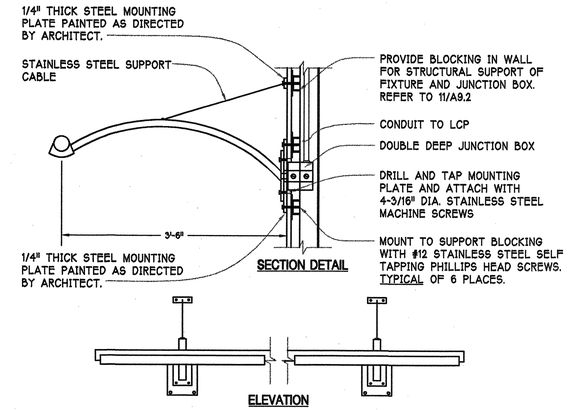

TYPE FP1 WALL MOUNTED DISPLAY ACCENT

SCALE: NONE
FILE:

1 / E7.4

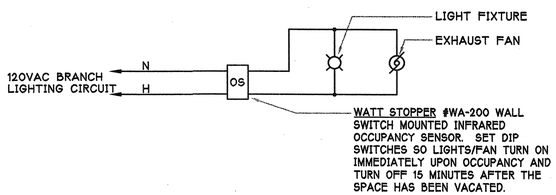

BATHROOM OCCUPANCY SENSOR CONTROL DIAGRAM

SCALE: NONE
FILE: L:\LIGHT\MOTION\LMOTI011

8 / E7.4

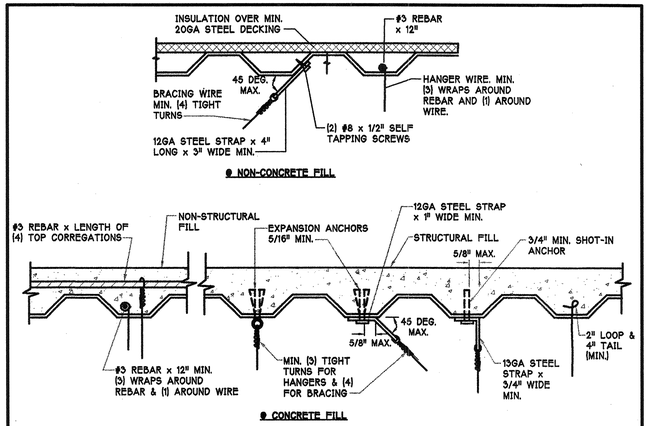

HANGER & BRACING WIRES AT DECKING

SCALE: NONE

5 / E7.4

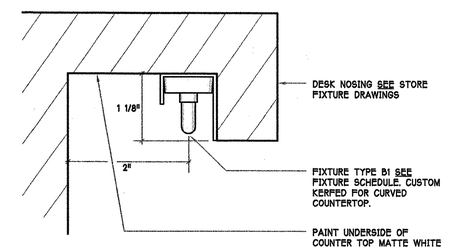

UNDER DESK NOSING ACCENT

SCALE: NONE

2 / E7.4

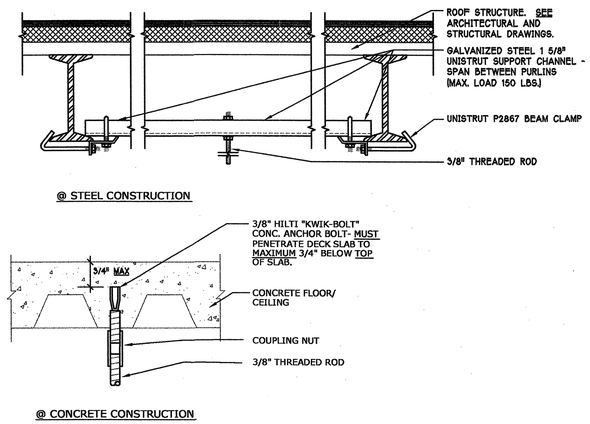

THREADED ROD CONNECTION TO STRUCTURE

SCALE: NONE
FILE: L:\LIGHT\BRACING\LBRACING001 (MOD.)

9 / E7.4

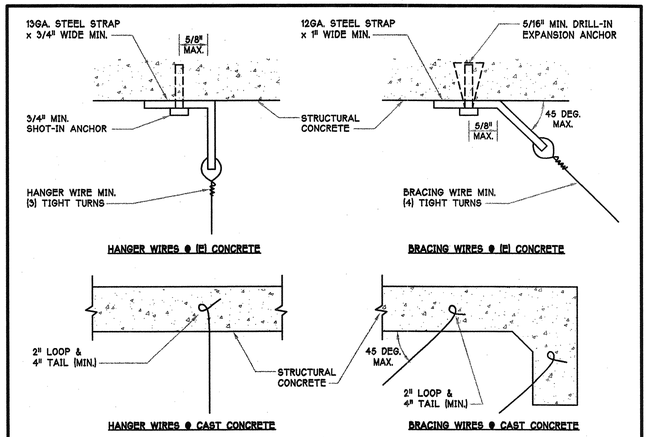

HANGER & BRACING WIRES AT CONCRETE

SCALE: NONE

6 / E7.4

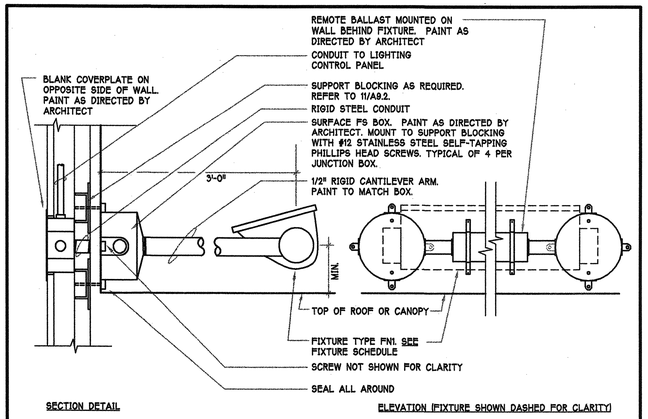

ROOF UPLIGHT

SCALE: NONE

3 / E7.4

O'MAHONY & MYER
ELECTRICAL and LIGHTING DESIGN
4340 REDWOOD HWY., SUITE 245
SAN RAFAEL, CALIFORNIA 94903
(415) 492-0420/FAX (415) 479-9662
www.ommconsulting.com

DIABLO VALLEY COLLEGE

DIABLO VALLEY COLLEGE NEW BOOKSTORE

321 GOLF CLUB RD.
PLEASANT HILL, CALIFORNIA

REGISTERED PROFESSIONAL ENGINEER
PETER J. COLEMAN
No.14738
Exp. 6/07
ELECTRICAL
STATE OF CALIFORNIA

DATE: 23 JULY, 2004

REVISIONS:

BID SET

SHEET TITLE:
DETAILS

IDENTIFICATION STAMP
DIVISION OF THE STATE ARCHITECT
105925
APPL 01
AC LE FLS EO SS A1
DATE: 5-12-04 JUL 26 2004

BLDG. ID: 098
ID CODE: 312098-109.01-A

DRAWN BY: KK/TV/LC
CHECKED BY: PC
JOB NO: 203066

SHEET
E7.4

DIABLO_VALLEY_COLLEGE_BOOKSTORE-203066

Jul 20, 2004 - 11:34am jkirk P:\2003\DIABLO_VALLEY_COLLEGE_BOOKSTORE-203066\CAD\E75-DVC_BOOKSTORE.DWG

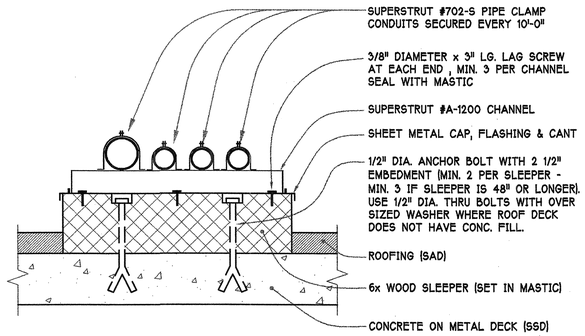

CONDUIT MOUNTING AT ROOF

SCALE: NONE
FILE: L:\POWER\CONDUIT\PCOND012 (MOD.)

6 / E7.5

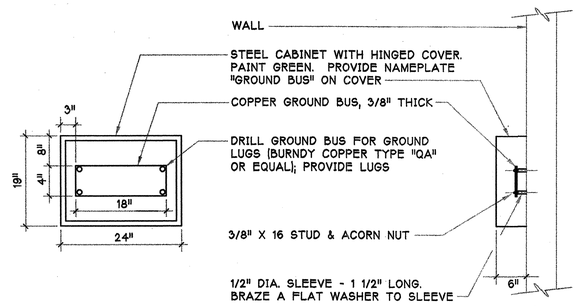

GROUND BUS CABINET

SCALE: NOT TO SCALE

4 / E7.5

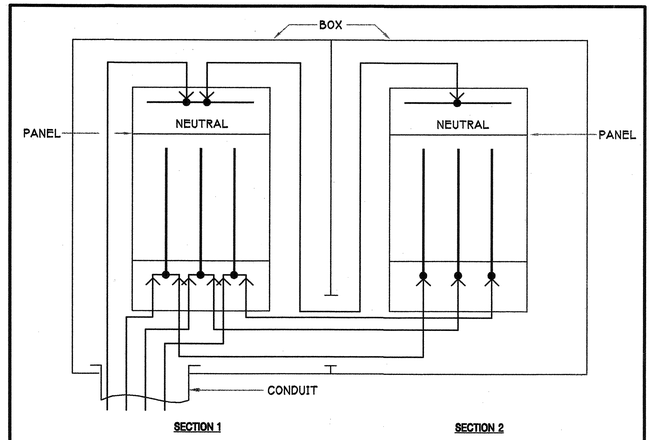

DOUBLE SECTION PANEL

SCALE: NONE
L:\POWER\PANEL\PPANE003

1 / E7.5

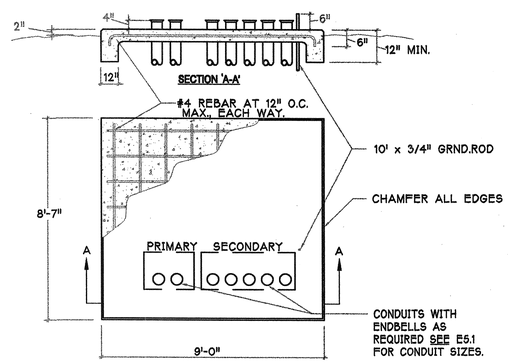

NOTE:
VERIFY PAD DIMENSIONS & LOCATIONS OF PRIMARY SECONDARY CONDUIT TERMINATIONS WITH TRANSFORMER SUPPLIER.

TRANSFORMER PAD

SCALENONE
FILE: L:\ODETAILS\TRNSFPAD

7 / E7.5

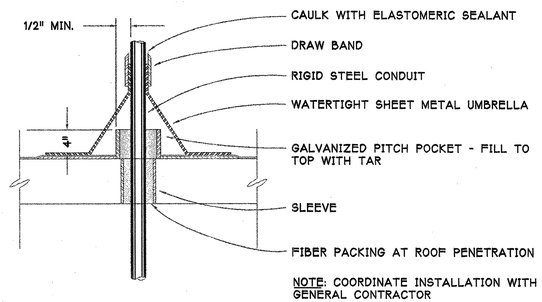

NOTE: COORDINATE INSTALLATION WITH GENERAL CONTRACTOR

ROOF PENETRATION DETAIL

SCALE: NOT TO SCALE
L:\POWER\CONDUIT\PCOND009

5 / E7.5

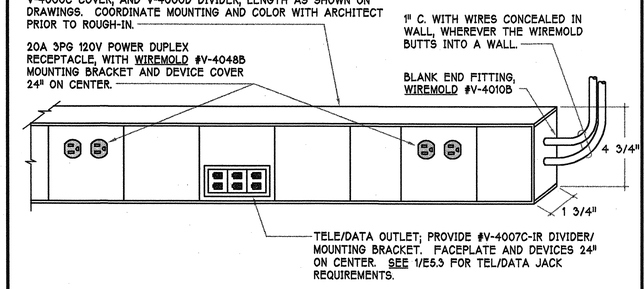

NOTES:
1. SEE THE ELECTRICAL PLANS FOR THE QUANTITY & LOCATION OF DEVICES.
2. PROVIDE ALL REQUIRED WIREMOLD FITTINGS FOR A COMPLETE SURFACE RACEWAY SYSTEM.

SURFACE STEEL RACEWAY

SCALE: NONE
FILE: L:\POWER\WIREMOLD\PWIRE005

2 / E7.5

NOTES

1. PROVIDE AND INSTALL (3)- 3" CONDUITS WITH TEL/DATA HOMERUN CABLES. ONE OF THE CONDUITS SHALL BE EMPTY FOR FUTURE USE.
2. INSTALL CONDUITS AND CABLES IN SOFFIT, SEE 9/A9.6.
3. STUB CONDUITS INTO SERVER ROOM.
4. PROVIDE AND INSTALL TEL/DATA CABLES TO THE MDF PATCH PANELS AND TEL. PUNCH DOWN BLOCKS, SEE 2/E5.3.
5. PROVIDE AND INSTALL NEMA 1 PULLBOX 36"x36"x6"DEEP.
6. PROVIDE AND INSTALL NEMA 1 PULLBOX 48"LONGx 12"HIGHx 6"DEEP.
7. FIRE SEAL ALL CONDUIT PENETRATIONS, TYPICAL.

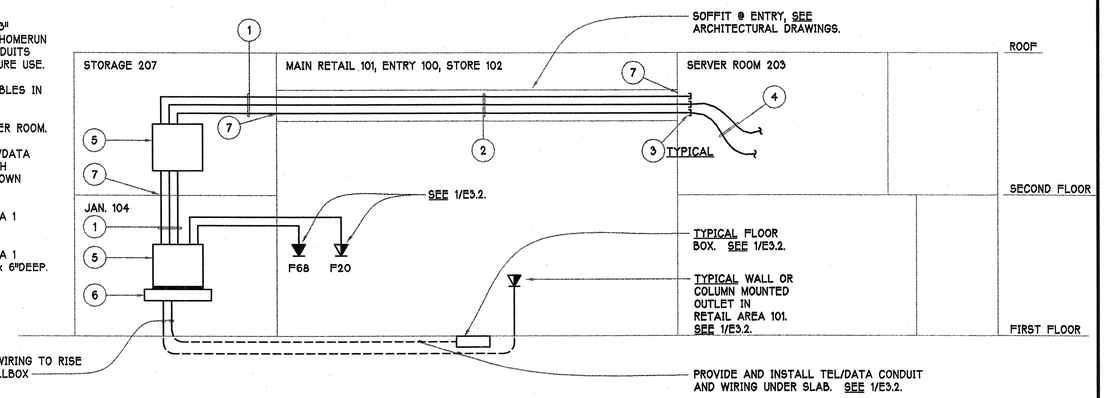

RETAIL AREA TELEPHONE / DATA RISER DIAGRAM

SCALE: NONE

8 / E7.5

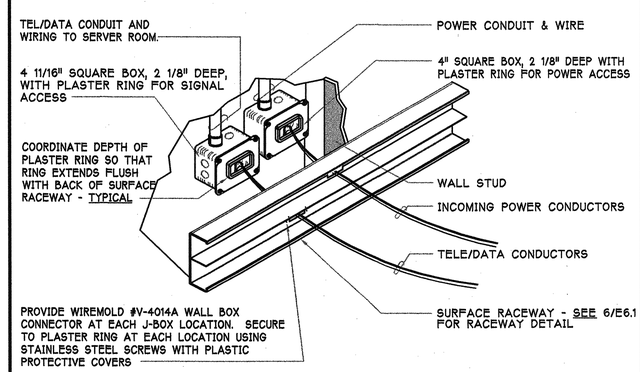

WALL TO SURFACE RACEWAY ACCESS

SCALE: NONE
FILE: L:\POWER\WIREMOLD\PWIRE003

3 / E7.5

O'MAHONY & MYER
ELECTRICAL and LIGHTING DESIGN
4340 REDWOOD HWY., SUITE 245
SAN RAFAEL, CALIFORNIA 94903
(415) 492-0420/FAX (415) 479-9662
www.ommconsulting.com

DIABLO VALLEY COLLEGE
NEW BOOKSTORE

321 GOLF CLUB RD.
PLEASANT HILL, CALIFORNIA

REGISTERED PROFESSIONAL ENGINEER
JAMES J. COLE OLEANDER
No.14738 Exp. 6/07
ELECTRICAL
STATE OF CALIFORNIA

DATE: 23 JULY, 2004

REVISIONS:

BID SET

SHEET TITLE:

DETAILS & TEL/DATA RISER DIAGRAM

IDENTIFICATION STAMP
DIVISION OF THE STATE ARCHITECT
APPL 01 105925
AC LE FLS EO SS A1
DATE: 5-12-04 JUL 26 2004

BLDG. ID: 098
ID CODE: 312098-109.01-A

DRAWN BY: AT/TV/LC
CHECKED BY: PC
JOB NO: 203066

SHEET E7.5

DIABLO_VALLEY_COLLEGE_BOOKSTORE-203066

Jul 20, 2004 - 11:35am jkirk P:\2003\DIABLO_VALLEY_COLLEGE_BOOKSTORE-203066\CAD\FE01-DVC_BOOKSTORE.dwg

FIRE ALARM EQUIPMENT LIST

SYMBOL	ITEM	MANUFACTURER & MODEL No	CSFM LISTING NUMBER	STANDBY CURRENT	ALARM CURRENT
FACP	CONTROL PANEL	SIEMENS # MXL	7170-0067:154	105mA	105mA
FAEP	POWER EXPANDER PANEL	SIEMENS # PAD-3	7300-0667:218	0mA	0mA
FAAP	ANNUNCIATOR PANEL	SIEMENS # RCC-2	7300-0067:152	150mA	150mA
FIM	FAULT ISOLATOR MODULE	SIEMENS # L1M-1	7300-0067:172	0mA	0.5mA
MM	MONITOR MODULE	SIEMENS # TR1-S	7300-0067:146	1.5mA	1.5mA
CM	CONTROL MODULE	SIEMENS # TR1-R	7300-0067:146	1.5mA	1.5mA
H	MAGNETIC DOOR HOLDER	RIXON # FM998	3550-0047:001	20mA	0mA
F	MANUAL PULL STATION	SIEMENS # MS1-10B	7150-0067:036	0mA	0mA
S	ION SMOKE DETECTOR	SIEMENS # IL1-1	7271-0067:171	1.2mA	1.5mA
S P	PHOTO SMOKE DETECTOR	SIEMENS # FP-11	7272-0067:203	0.75mA	0.75mA
H	HEAT DETECTOR	SIEMENS # FPT-11	7270-0067:202	0.75mA	0.75mA
D	DUCT DETECTOR	SIEMENS # FP-11 AD-11XPR + STA-6 + EAD-3	7272-0067:203 3240-0067:116	0.75mA	0.75mA
SM	DUAL CIRCUIT SYNC MODULE	WHEELOCK # DSM	7300-0785:132	0mA	35mA
H M	MINI HORN	WHEELOCK # MIZ-TC24-R	7135-0785:150	0mA	17mA
H *	WP HORN	WHEELOCK # AH-24WP-R	7125-0785:131	0mA	50mA
H	HORN	WHEELOCK # NH-12/24-R	7125-0785:142	0mA	28mA
S 15	STROBE-15cd	WHEELOCK # RSS24 MCWFR	7125-0785:140	0mA	41mA
S 30	STROBE-30cd	WHEELOCK # RSS24 MCWFR	7125-0785:140	0mA	65mA
S 75	STROBE-75cd	WHEELOCK # RSS24 MCWFR	7125-0785:140	0mA	116mA
S 110	STROBE-110cd	WHEELOCK # RSS24 MCWFR	7125-0785:140	0mA	155mA
H 15	HORN/STROBE-15cd	WHEELOCK # NS24MC LWFR	7125-0785:142	0mA	65mA
H 30	HORN/STROBE-30cd	WHEELOCK # NS24MC LWFR	7125-0785:142	0mA	87mA
H 75	HORN/STROBE-75cd	WHEELOCK # NS24MC LWFR	7125-0785:142	0mA	134mA
H 110	HORN/STROBE-110cd	WHEELOCK # NS24MC LWFR	7125-0785:142	0mA	174mA

FIRE ALARM BATTERY CALCULATIONS:
FIRE ALARM CONTROL PANEL FACP

STAND-BY REQUIRED: 24 Hours with 5 Minutes of Full Alarm

STANDBY CONDITION:	Control Panel	1	@	0.1050	=	0.105 Amps	
	Annuniciator	1	@	0.1500	=	0.150 Amps	
	Monitor Modules	6	@	0.0015	=	0.009 Amps	
	Control Modules	4	@	0.0015	=	0.006 Amps	
	Ion Smoke Detector	18	@	0.0012	=	0.022 Amps	
	Heat Detectors	2	@	0.0008	=	0.002 Amps	
	Duct Detectors	2	@	0.0012	=	0.002 Amps	
	STAND-BY AMPS REQUIRED					0.296	x 24 Hours = 7.09 AH
ALARM CONDITION:	Control Panel	1	@	0.1050	=	0.105 Amps	
	Annunciator	1	@	0.1500	=	0.150 Amps	
	Monitor Modules	6	@	0.0015	=	0.009 Amps	
	Control Modules	4	@	0.0015	=	0.006 Amps	
	Ion Smoke Detectors	18	@	0.0015	=	0.027 Amps	
	Heat Detectors	2	@	0.0008	=	0.002 Amps	
	Duct Detectors	2	@	0.0015	=	0.003 Amps	
	Dual Sync Modules	2	@	0.0350	=	0.070 Amps	
	ALARM AMPS REQUIRED					0.372	x 5 Min. = 0.03 AH
							Subtotal 7.12 AH
							Total @ 125% = 8.90 AH Required

BATTERIES PROVIDED: (4) 12V 7AH Power Sonic #PS-1270 Gel-Cells — Series connection for 24V 14AH Capacity

FIRE ALARM BATTERY CALCULATIONS:
FIRE ALARM EXPANDER PANEL FAEP

STAND-BY REQUIRED: 24 Hours with 5 Minutes of Full Alarm

STANDBY CONDITION:	Expander Panels	1	@	0.000	=	0.000 Amps	
	STAND-BY AMPS REQUIRED					0.000	x 24 Hours = 0.00 AH
ALARM CONDITION:							
	Expander Panels	1	@	0.0000	=	0.000 Amps	
	Dual Sync Modules	2	@	0.0350	=	0.070 Amps	
	Weatherproof Horns	1	@	0.0500	=	0.050 Amps	
	Strobes (15cd)	6	@	0.0410	=	0.246 Amps	
	Strobes (30cd)	0	@	0.0650	=	0.000 Amps	
	Strobes (75cd)	1	@	0.1160	=	0.116 Amps	
	Strobes (110cd)	4	@	0.1550	=	0.620 Amps	
	Horn/Strobes (15cd)	12	@	0.0650	=	0.780 Amps	
	Horn/Strobes (30cd)	2	@	0.0870	=	0.174 Amps	
	Horn/Strobes (75cd)	1	@	0.1340	=	0.134 Amps	
	Horn/Strobes (110cd)	6	@	0.1740	=	1.044 Amps	
	ALARM AMPS REQUIRED					3.234	x 5 Min. = 0.27 AH
							Subtotal 0.27 AH
							Total @ 125% = 0.34 AH Required

BATTERIES PROVIDED: (2) 12V 7AH Power Sonic #PS-1270 Gel-Cells — Series connection for 24V 7AH Capacity

FIRE ALARM VOLTAGE DROP CALCULATIONS
NOTIFICATION CIRCUIT LOOP N1
DC SUP. VOLTS= 24 WIRE= 12 OHMS/M FT= 1.93

											TOTALS:
FEET :	20	80	25	15	190	25	30	30	20	25	39 FT.
DEVICE #:	1-1	1-2	1-3	1-4	1-5	1-6	1-7	1-8	1-9	1-10	
mA LOAD:	65	65	87	65	65	87	65	174	41	41	755 mA
VOLTAGE:	23.95	23.63	23.53	23.48	22.88	22.81	22.73	22.66	22.63	22.59	
FEET :	30	65									134 FT.
DEVICE #:	1-11	1-12									
mA LOAD:	174	174									348 mA
VOLTAGE:	22.55	22.50	22.50	22.50	22.50	22.50	22.50	22.50	22.50	22.50	
FEET :											134 FT.
DEVICE #:											
mA LOAD:											0 mA
VOLTAGE:	22.50	22.50	22.50	22.50	22.50	22.50	22.50	22.50	22.50	22.50	
											6.2% V-DROP

FIRE ALARM VOLTAGE DROP CALCULATIONS
NOTIFICATION CIRCUIT LOOP N2
DC SUP. VOLTS= 24 WIRE= 12 OHMS/M FT= 1.93

											TOTALS:
FEET :	40	20	60	15	145	45	45	10	50		430 FT.
DEVICE #:	2-1	2-2	2-3	2-9	2-4	2-5	2-6	2-7	2-8		
mA LOAD:	134	174	174	50	155	155	174	155	155		1326 mA
VOLTAGE:	23.80	23.70	23.47	23.42	22.97	22.86	22.78	22.77	22.74	22.74	
											5.3% V-DROP

FIRE ALARM VOLTAGE DROP CALCULATIONS
NOTIFICATION CIRCUIT LOOP N3
DC SUP. VOLTS= 24 WIRE= 12 OHMS/M FT= 1.93

											TOTALS:
FEET :	45	20	5	50	100	25	20	30	15	60	370 FT.
DEVICE #:	3-1	3-2	3-3	3-4	3-5	3-6	3-7	3-8	3-9	3-10	
mA LOAD:	65	65	65	116	65	65	41	41	65	41	629 mA
VOLTAGE:	23.90	23.84	23.82	23.68	23.45	23.40	23.36	23.32	23.29	23.22	
FEET :	30	65	20								485 FT.
DEVICE #:	3-11	3-12	3-13								
mA LOAD:	41	174	65								280 mA
VOLTAGE:	23.19	23.13	23.12	23.12	23.12	23.12	23.12	23.12	23.12	23.12	
FEET :											485 FT.
DEVICE #:											
mA LOAD:											0 mA
VOLTAGE:	23.12	23.12	23.12	23.12	23.12	23.12	23.12	23.12	23.12	23.12	
											3.7% V-DROP

GENERAL FIRE ALARM NOTES

6. APPLICABLE CODES:

   2001 CALIFORNIA BUILDING STANDARDS ADMINISTRATIVE CODE (PART 1, TITLE 24, CCR)

   2001 CALIFORNIA BUILDING CODE, VOLUMES 1, 2 AND 3 (PART 2, TITLE 24, CCR) (1997 EDITION UNIFORM BUILDING CODE WITH 2001 CALIFORNIA AMENDMENTS)

   2001 CALIFORNIA BUILDING CODE (PART 3, TITLE 24, CCR) (1999 EDITION NATIONAL ELECTRICAL CODE WITH 2001 CALIFORNIA AMENDMENTS)

   2001 CALIFORNIA MECHANICAL CODE (PART 4, TITLE 24, CCR) (2000 EDITION IAPMO UNIFORM MECHANICAL CODE WITH 2001 CALIFORNIA AMENDMENTS)

   2001 CALIFORNIA PLUMBING CODE (PART 5, TITLE 24 CCR) (2000 EDITION IAPMO UNIFORM PLUMBING CODE WITH 2001 CALIFORNIA AMENDMENTS)

   2001 CALIFORNIA ENERGY CODE (PART 6, TITLE 24, CCR)

   2001 CALIFORNIA ELEVATOR SAFETY CONSTRUCTION CODE (PART 7, TITLE 24, CCR)

   2001 CALIFORNIA FIRE CODE (PART 9, TITLE 24, CCR)

   2001 CALIFORNIA REFERENCED STANDARDS CODE (PART 12, TITLE 24, CCR)

   NFPA 13, 1999 EDITION, THE INSTALLATION OF AUTOMATIC SPRINKLER SYSTEMS, AS AMENDED

   NFPA 14, 2000 EDITION, INSTALLATION OF STANDPIPE, PRIVATE HYDRANT AND HOSE SYSTEMS

   NFPA 24, 1995 EDITION, INSTALLATION OF PRIVATE FIRE SERVICE MAINS AND THEIR APPURTENANCES

   NFPA 72, 1999 EDITION, NATIONAL FIRE ALARM CODE, AS AMENDED

7. STROBES SHALL FLASH AT A RATE NOT EXCEEDING TWO FLASHES PER SECOND, NOR BE LESS THAN ONE FLASH EVERY SECOND. (NFPA 72).

8. FIRE ALARM CONTRACTOR SHALL PROVIDE A "RECORD OF COMPLETION" TO THE INSPECTOR OF RECORD (IOR)/DSA AFTER COMPLETION OF OPERATIONAL ACCEPTANCE TESTS. (1996 NFPA 72 SEC 1-7.2.1 & FIGURE 1-7.2.1).

9. POWER SERVICE TO THE FACP, REMOTE POWER SUPPLIES, AND CENTRAL STATION AUTO DIALER SHALL BE ON A DEDICATED BRANCH CIRCUIT WITH A RED MARKING AND IDENTIFIED AS "FIRE ALARM CIRCUIT CONTROL". (NFPA SEC 1-5.2.8.2).

10. AUDIBLE SIGNALS INTENDED FOR OPERATION IN THE PUBLIC MODE SHOULD HAVE A SOUND LEVEL OF NOT LESS THAN 75 dBA AT 10 FEET OR MORE THAN 110 dBA AT THE MINIMUM HEARING DISTANCE FROM THE AUDIBLE APPLIANCE.

11. HORNS SHALL BE AUDIBLE IN RESTROOMS AT LEAST 15dBa ABOVE AMBIENT.

FIRE ALARM SYSTEM DISCRIPTION

1. THE NEW FIRE ALARM SYSTEM SHALL BE A AUTOMATIC ADDRESSABLE SYSTEM WITH STYLE 4, CLASS B WIRING.

FIRE ALARM SCOPE OF WORK

1. PROVIDE A COMPLETE FIRE ALARM SYSTEM, INCLUDING REMOTE POWER SUPPLY EXPANDER PANEL, OUTLETS, DEVICES AND WIRING FOR THE ENTIRE BOOKSTORE.
2. TERMINATE EACH INITIATION LOOP AT THE MAIN FIRE ALARM CONTROL PANEL AS SHOWN.
3. TERMINATE EACH NOTIFICATION LOOP TO THE FACP OR FAEP AS SHOWN.
4. THE NEW FIRE ALARM CONTROL PANEL SHALL BE CONFIGURED SO THAT IT CAN BE CONNECTED TO THE CAMPUS FIRE ALARM SYSTEM IN THE FUTURE.

SEQUENCE OF OPERATION

1. MANUAL PULL STATION - WHEN A PULL STATION IS PULLED, IT WILL ANNUNCIATE AN ALARM AT THE MAIN FACP. ALARM WILL ACTIVATE ALL AUDIO AND VISUAL DEVICES THROUGHOUT THE FACILITY.
2. SMOKE AND HEAT DETECTORS - WHEN A SMOKE OR HEAT DETECTOR IS ACTIVATED, IT WILL ANNUNCIATE AN ALARM AT THE MAIN FACP. ALARM WILL ACTIVATE ALL AUDIO, VISUAL AND VOICE EVACUATION DEVICES THROUGHOUT THE FACILITY.
3. BUILDING POWER FAILURE- WHEN THE BUILDING LOSES POWER, THE FAILURE WILL SHOW UP AS A TROUBLE SIGNAL ON THE MAIN FACP. THE SYSTEM WILL STAY ACTIVE ON THE BATTERY BACK-UP POWER IN ACCORDANCE WITH THE FIRE CODE FROM THE STATE FIRE CODE FROM THE STATE FIRE MARSHAL (CSFM).
4. SYSTEM SHALL INDICATE SUPERVISORY ALARMS FOR ALL SYSTEM FAULTS (i.e. GROUND FAULTS, SHORTS, OPEN CIRCUITS, BATTERY DISCONNECT, ECT.)

GENERAL FIRE ALARM NOTES

1. FINAL FIRE ALARM TEST SHALL BE MADE WITH THE DSA INSPECTOR OF RECORD (IOR). LOCAL FIRE AUTHORITY SHALL BE NOTIFIED OF DATE AND TIME OF DATE AND TIME OF FINAL ALARM TESTING AND SHALL ASSIST/WITNESS SUCH AS TESTING WHEN ABLE.
2. UNDERGROUND AND EXTERIOR CONDUITS WILL HAVE WATERTIGHT FITTINGS. (CEC 110-11 AND 300-6)
3. FIRE ALARM DEVICE MOUNTING HEIGHTS:

   PULL STATION: 48" TO CENTER LINE OF DEVICE ABOVE FINISHED FLOOR. (CEC 760-9).

   HORN INTERIOR: 90" TO TOP OF DEVICE ABOVE FINISHED FLOOR, NOT LESS THAN 6" FROM CEILING. (NFPA 72-6-3.7).

   WALL MOUNTED STROBE OR HORN/STROBE: 80" TO BOTTOM OF DEVICE LENS TO +96" TO TOP OF DEVICE LENS ABOVE FINISH FLOOR, BUT NOT LESS THAN 6" FROM CEILING. (NFPA 72-6-4.4).
4. AUDIBLE FIRE ALARM SYSTEM LEVEL SHALL BE AT LEAST 15dBA ABOVE THE AVERAGE AMBIENT SOUND LEVEL IN ALL OCCUPIABLE AREAS. (NFPA 72 SEC (i.e. CLASSROOM AVERAGE AMBIENT ROOM NOISE IS 45 dBA PLUS 15 dBA EQUAL 60DBA MINIMUM ALARM TONE REQUIRED).
5. PROVIDE TEMPORAL THREE DISTINCTIVE FIRE ALARM SOUND (CFC SEC. 1007.3.3.3.2) (NFPA 72 SEC. 3-7.2)

O'MAHONY & MYER
ELECTRICAL and LIGHTING DESIGN
4340 REDWOOD HWY., SUITE 245
SAN RAFAEL, CALIFORNIA 94903
(415) 492-0420/FAX (415) 479-9662
www.ommconsulting.com

DIABLO VALLEY COLLEGE

DIABLO VALLEY COLLEGE NEW BOOKSTORE

321 GOLF CLUB RD.
PLEASANT HILL, CALIFORNIA

REGISTERED PROFESSIONAL ENGINEER PETER J. COLENBRANDER No.14738 Exp. 8/07 ELECTRICAL STATE OF CALIFORNIA

DATE: 23 JULY, 2004

REVISIONS:

BID SET

SHEET TITLE:

FIRE ALARM EQUIP. LIST, NOTES, & CALCS.

IDENTIFICATION STAMP
DIVISION OF THE STATE ARCHITECT
APPL 01 105925
AC LE FLS ED SS AI
DATE: 5-12-04 JUL 2 6 2004

BLDG. ID: 098
ID CODE: 312098–109.01–A

DRAWN BY:
CHECKED BY: PC
JOB NO: 203066

SHEET FEO.1

DIABLO_VALLEY_COLLEGE_BOOKSTORE-203066

Jul 20, 2004 - 10:03am jkirk P:\2003\DIABLO_VALLEY_COLLEGE_BOOKSTORE-203066\CAD\FE31-DVC_BOOKSTORE.dwg

NUMBERED SHEET NOTES

1. MAIN FIRE ALARM PANEL FACP. PROVIDE DEDICATED HARD WIRED 120VAC 20AMP BRANCH CIRCUIT.
2. INSTALL AT TOP OF ELEVATOR SHAFT.
3. ELEVATOR FIRE ALARM CONTROL MODULE, CONNECT COMPLETE.
4. HEAT DETECTOR WITHIN 2' OF SPRINKLER HEAD.

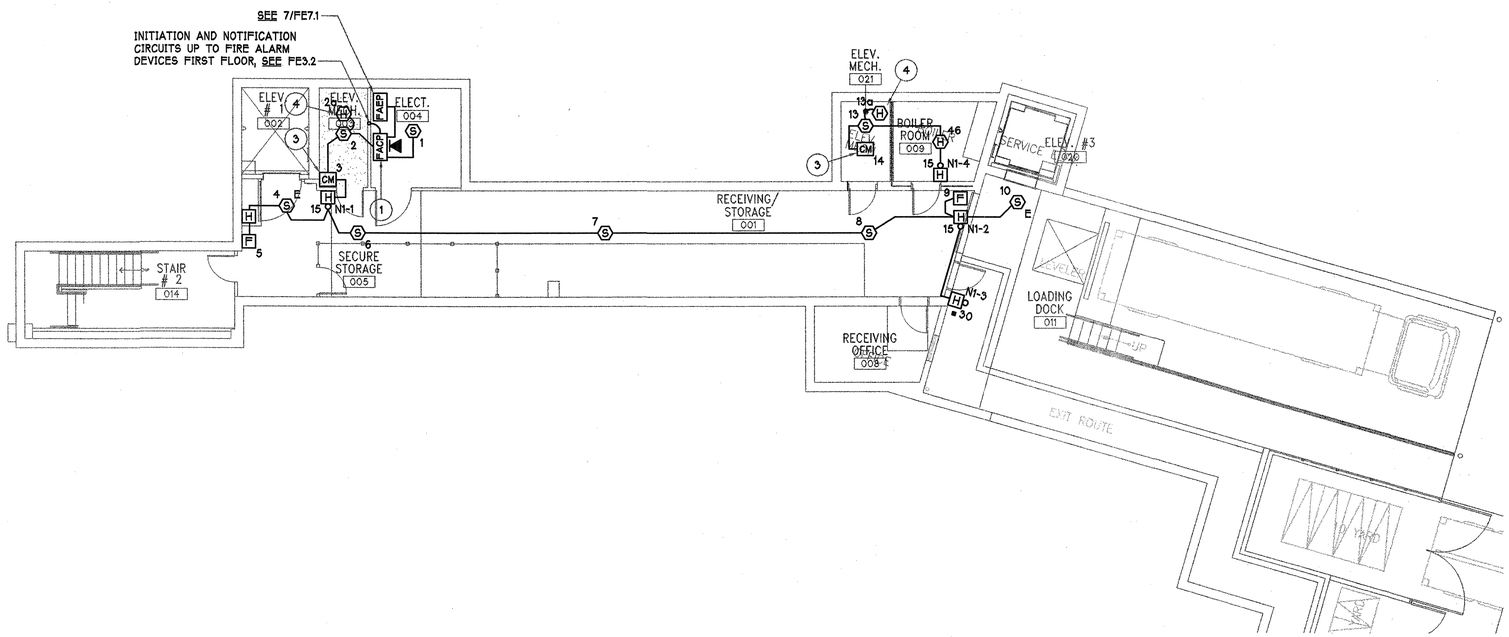

BASEMENT FLOOR PLAN - FIRE ALARM

SCALE: 1/8" = 1'-0"
FILE: ... Xplan-0 (07-19-04) + XLDplan (04-20-04)

1 FE3.1

REF.NORTH

O'MAHONY & MYER
ELECTRICAL and LIGHTING DESIGN
4340 REDWOOD HWY., SUITE 245
SAN RAFAEL, CALIFORNIA 94903
(415) 492-0420/FAX (415) 479-9662
www.ommconsulting.com

DIABLO VALLEY COLLEGE

DIABLO VALLEY COLLEGE NEW BOOKSTORE

321 GOLF CLUB RD.
PLEASANT HILL, CALIFORNIA

REGISTERED PROFESSIONAL ENGINEER
PETER J. COLENBRANDER
No.14738
Exp. 8/07
ELECTRICAL
STATE OF CALIFORNIA

DATE: 23 JULY, 2004

REVISIONS:

BID SET

SHEET TITLE:

BASEMENT FLOOR PLAN – FIRE ALARM

IDENTIFICATION STAMP
DIVISION OF THE STATE ARCHITECT
105925
APPL 01
AC LE FLS EO SS AI
DATE: 5-12-04 JUL 26 2004

BLDG. ID: 098
ID CODE: 312098-109.01-A

DRAWN BY:
CHECKED BY: PC
JOB NO: 203066

SHEET FE3.1

DIABLO_VALLEY_COLLEGE_BOOKSTORE-203066

Jul 20, 2004 - 10:01am jkirk P:\2003\DIABLO_VALLEY_COLLEGE_BOOKSTORE-203066\CAD\FE32-DVC_BOOKSTORE.dwg

NUMBERED SHEET NOTES

1. INITIATION AND NOTIFICATION CIRCUITS DOWN TO FACP IN BASEMENT. SEE FE3.1
2. INITIATION AND NOTIFICATION CIRCUITS UP TO EQUIPMENT ON THE SECOND FLOOR. SEE FE3.3.
3. HEAT DTECTOR WITHIN 2' OR SPRINKLER EQUIPMENT

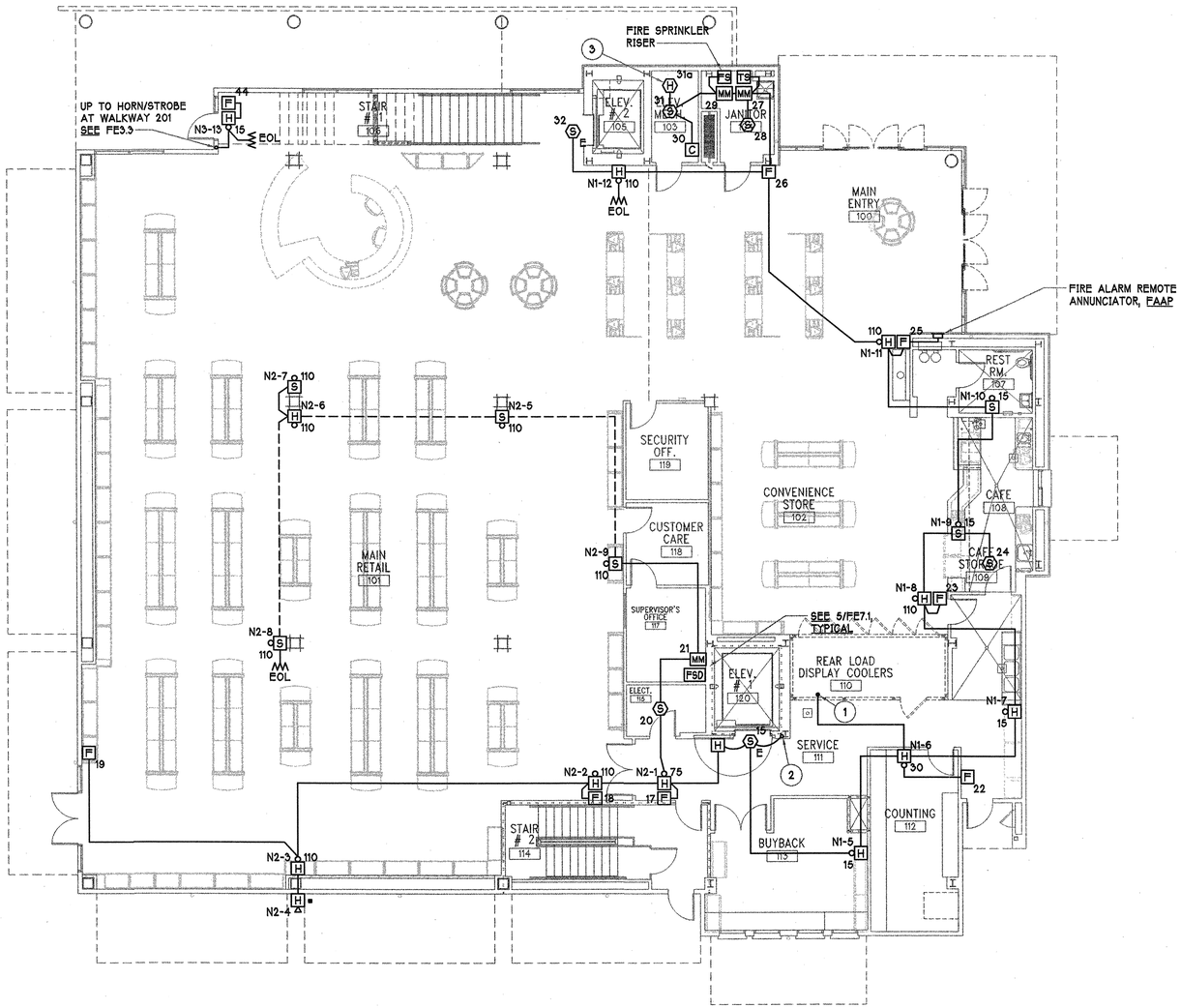

FIRST FLOOR PLAN - FIRE ALARM
SCALE: 1/8" = 1'-0"
FILE: ... Xplan-1 (07-19-04) + xStore1 (04-20-04)

REF.NORTH

NOTES: PREPARE SHOP DRAWINGS SHOWING ALL CONDUIT ROUTING. SUBMIT FOR APPROVAL PRIOR TO ROUGH IN.

O'MAHONY & MYER
ELECTRICAL and LIGHTING DESIGN
4340 REDWOOD HWY., SUITE 245
SAN RAFAEL, CALIFORNIA 94903
(415) 492-0420/FAX (415) 479-9662
www.ommconsulting.com

DIABLO VALLEY COLLEGE
NEW BOOKSTORE
321 GOLF CLUB RD.
PLEASANT HILL, CALIFORNIA

REGISTERED PROFESSIONAL ENGINEER PETER J. COLENBRANDER No.14738 Exp. 6/07 ELECTRICAL STATE OF CALIFORNIA

DATE: 23 JULY, 2004

REVISIONS:

BID SET

SHEET TITLE:
FIRST FLOOR PLAN – FIRE ALARM

IDENTIFICATION STAMP
DIVISION OF THE STATE ARCHITECT
105925
APPL 01
AC LE FLS ED SS AJ
DATE: 5-12-04 JUL 26 2004

BLDG. ID: 098
ID CODE: 312098-109.01-A
DRAWN BY:
CHECKED BY: PC
JOB NO: 203066
SHEET FE3.2

DIABLO_VALLEY_COLLEGE_BOOKSTORE-203066

Jul 20, 2004 - 9:58am tvessels P:\2003\DIABLO_VALLEY_COLLEGE_BOOKSTORE-203066 \CAD\FE33-DVC_BOOKSTORE.dwg

NUMBERED SHEET NOTES

1. INSTALL AT TOP OF SHAFT.
2. PROVIDE AND INSTALL J-BOXES WITH 3/4" CONDUIT HOMERUN TO THE MAIN FIRE ALARM CONTROL PANEL. STUB EMPTY CONDUIT INTO FACP AND PROVIDE PULLSTRING. COORDINATE LOCATION PRIOR TO ROUGH-IN.
3. INITIATION AND NOTIFICATION CIRCUITS DOWN TO FIRST FLOOR, SEE FE3.2.
4. UP TO DUCT DETECTORS ON AT THE AIR CONDITIONING UNITS, SEE FE3.4.

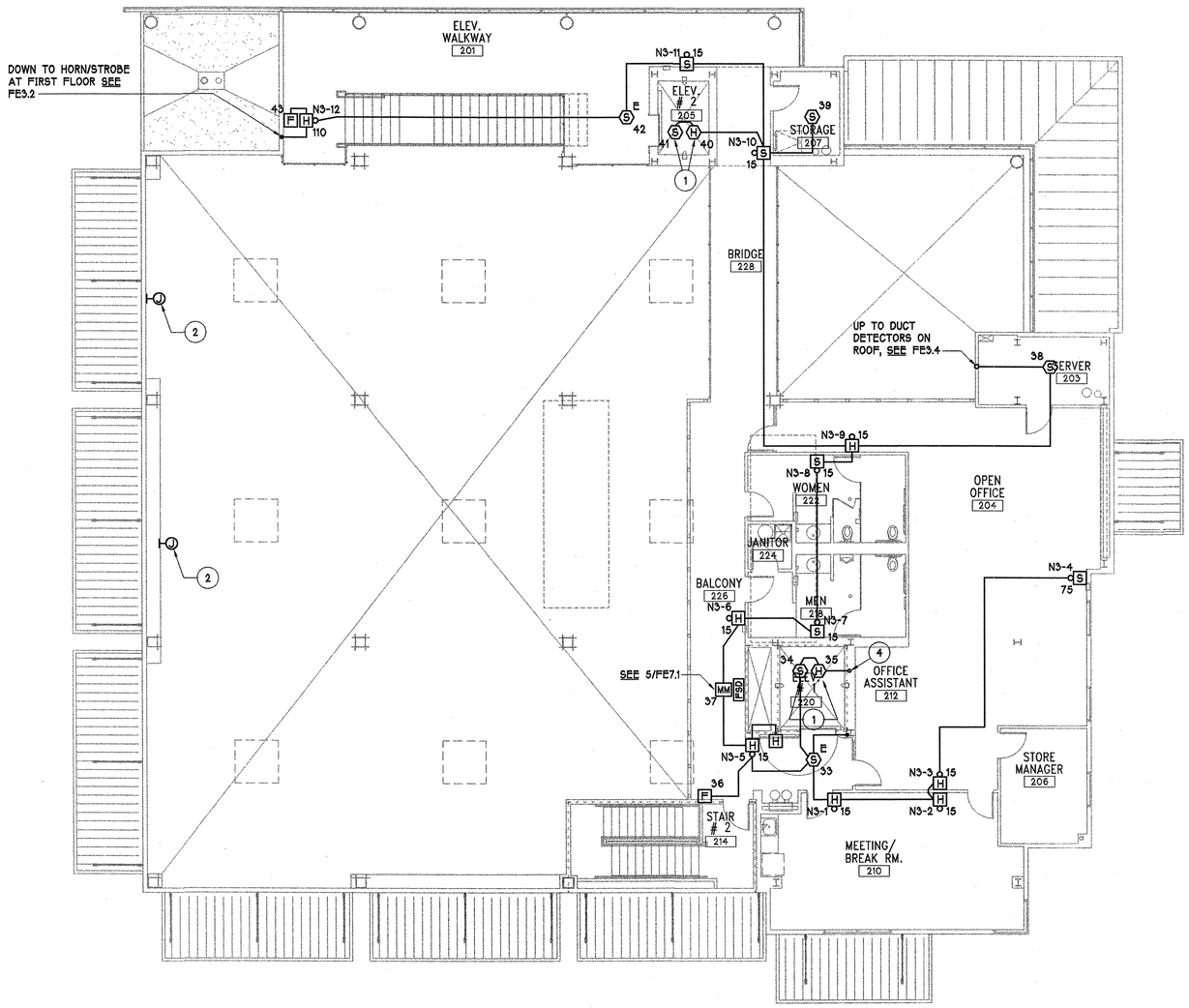

SECOND FLOOR PLAN - FIRE ALARM

SCALE: 1/8" = 1'-0"
FILE: ... xplan-2 (07-19-04)

1 FE3.3

REF.NORTH

NOTES: PREPARE SHOP DRAWINGS SHOWING ALL CONDUIT ROUTING. SUBMIT FOR APPROVAL PRIOR TO ROUGH IN.

O'MAHONY & MYER
ELECTRICAL and LIGHTING DESIGN
4340 REDWOOD HWY., SUITE 245
SAN RAFAEL, CALIFORNIA 94903
(415) 492-0420/FAX (415) 479-9662
www.ommconsulting.com

DIABLO VALLEY COLLEGE

DIABLO VALLEY COLLEGE NEW BOOKSTORE

321 GOLF CLUB RD.
PLEASANT HILL, CALIFORNIA

REGISTERED PROFESSIONAL ENGINEER PETER J. COLEMBRANDER No.14738 Exp. 8/07 ELECTRICAL STATE OF CALIFORNIA

DATE: 23 JULY, 2004

REVISIONS:

BID SET

SHEET TITLE:

2ND FLOOR PLAN – FIRE ALARM

IDENTIFICATION STAMP
DIVISION OF THE STATE ARCHITECT
APPL 01 105925
AC LE FLS EP SS AT
DATE: 5-12-04 JUL 26 2004

BLDG. ID: 098
ID CODE: 312098-109.01-A

DRAWN BY:
CHECKED BY: PC
JOB NO: 203066

SHEET FE3.3

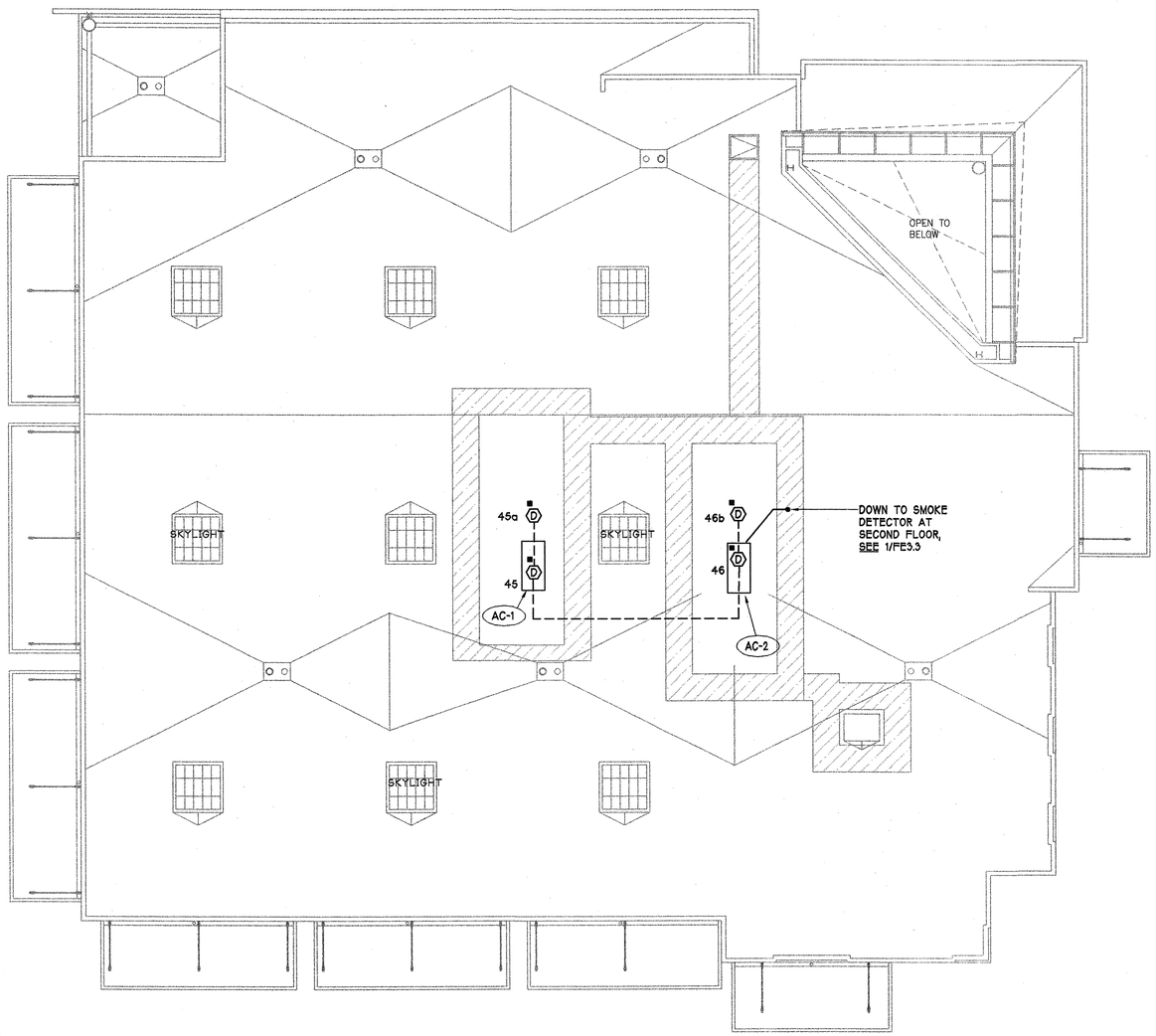

ROOF PLAN - ELECTRICAL

SCALE: 1/8" = 1'-0"
FILE: ... Xplan-r (07-19-04)

1 FE3.4

REF.NORTH

NOTES: PREPARE SHOP DRAWINGS SHOWING ALL CONDUIT ROUTING. SUBMIT FOR APPROVAL PRIOR TO ROUGH IN.

O'MAHONY & MYER
ELECTRICAL and LIGHTING DESIGN
4340 REDWOOD HWY., SUITE 245
SAN RAFAEL, CALIFORNIA 94903
(415) 492-0420/FAX (415) 479-9662
www.ommconsulting.com

DIABLO VALLEY COLLEGE

DIABLO VALLEY COLLEGE NEW BOOKSTORE

321 GOLF CLUB RD.
PLEASANT HILL, CALIFORNIA

REGISTERED PROFESSIONAL ENGINEER
PETER J. COLENBRANDER
No.14738
Exp. 8/07
ELECTRICAL
STATE OF CALIFORNIA

DATE: 23 JULY, 2004

REVISIONS:

BID SET

SHEET TITLE:

ROOF PLAN – ELECTRICAL

IDENTIFICATION STAMP
DIVISION OF THE STATE ARCHITECT
105925
APPL 01
AC LE FLS EB SS AJ
DATE: 5-12-04 JUL 26 2004

BLDG. ID: 098
ID CODE: 312098-109.01-A

DRAWN BY:
CHECKED BY: PC
JOB NO: 203066

SHEET FE3.4

DIABLO_VALLEY_COLLEGE_BOOKSTORE-203066
Jul 20, 2004 - 9:57am tvessels P:\2003\DIABLO_VALLEY_COLLEGE_BOOKSTORE-203066\CAD\FE34-DVC_BOOKSTORE.dwg

DIABLO_VALLEY_COLLEGE_BOOKSTORE-203066

Jul 20, 2004 - 11:35am jkirk P:\2003\DIABLO_VALLEY_COLLEGE_BOOKSTORE-203066\CAD\FE51-DVC_BOOKSTORE.dwg

WIRING LEGEND

A 2#16 TWISTED SHIELDED PAIR - INITIATION CIRCUIT

B 2#12 THWN - NOTIFICATION CIRCUIT

C 2#12, 24 VDC POWER

CIRCUITING

NOTIFICATION CKT N1: BASEMENT & FIRST FLOOR
NOTIFICATION CKT N2: FIRST FLOOR RETAIL
NOTIFICATION CKT N3: SECOND FLOOR
NOTIFICATION CKT N4: SPARE

INITIATION I1: ENTIRE BOOKSTORE

NOTE: WHEN HORNS ARE SILENCED, STROBES SHALL CONTINUE FLASHING UNTIL FIRE ALARM PANEL IS RESET.

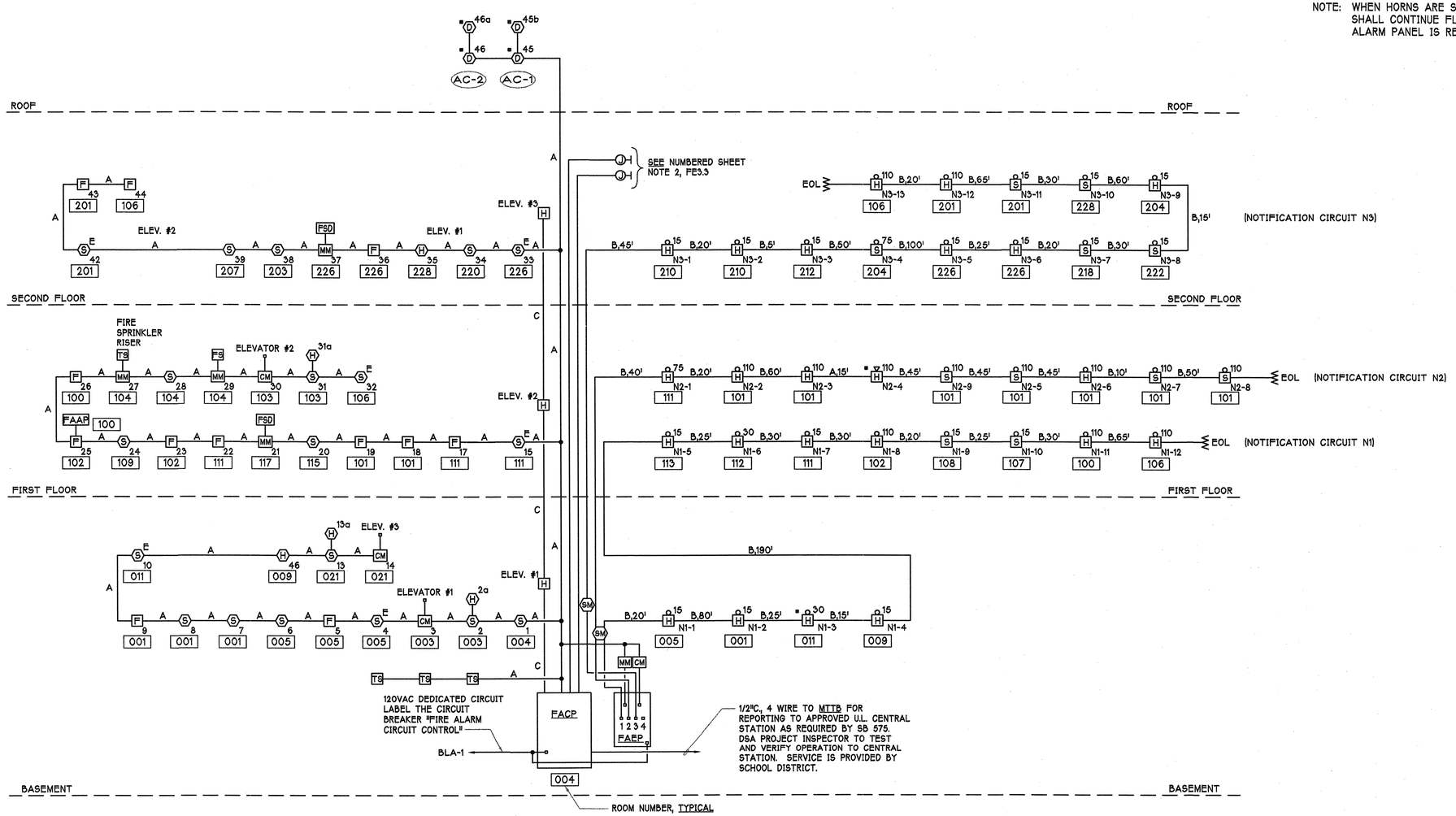

FIRE ALARM SINGLE LINE DIAGRAM

SCALE: NONE
FILE:

1 FE5.1

O'MAHONY & MYER
ELECTRICAL and LIGHTING DESIGN
4340 REDWOOD HWY., SUITE 245
SAN RAFAEL, CALIFORNIA 94903
(415) 492-0420/FAX (415) 479-9662
www.ommconsulting.com

DIABLO VALLEY COLLEGE
NEW BOOKSTORE

321 GOLF CLUB RD.
PLEASANT HILL, CALIFORNIA

REGISTERED PROFESSIONAL ENGINEER PETER A. COLEMAN No. 14738 Exp. 6/07 ELECTRICAL STATE OF CALIFORNIA

DATE: 23 JULY, 2004

REVISIONS:

BID SET

SHEET TITLE:

FIRE ALARM SINGLE LINE DIAGRAM

IDENTIFICATION STAMP
DIVISION OF THE STATE ARCHITECT
105925
APPL 01
AC LE FLS EQ SS 41
DATE: 5-12-04 JUL 26 2004

BLDG. ID: 098
ID CODE: 312098-109.01-A

DRAWN BY:
CHECKED BY: PC
JOB NO: 203066

SHEET FE5.1

DIABLO_VALLEY_COLLEGE_BOOKSTORE-203066

Jul 20, 2004 - 11:36am jkirk P:\2003\DIABLO_VALLEY_COLLEGE_BOOKSTORE-203066\CAD\FE71-DVC_BOOKSTORE.dwg

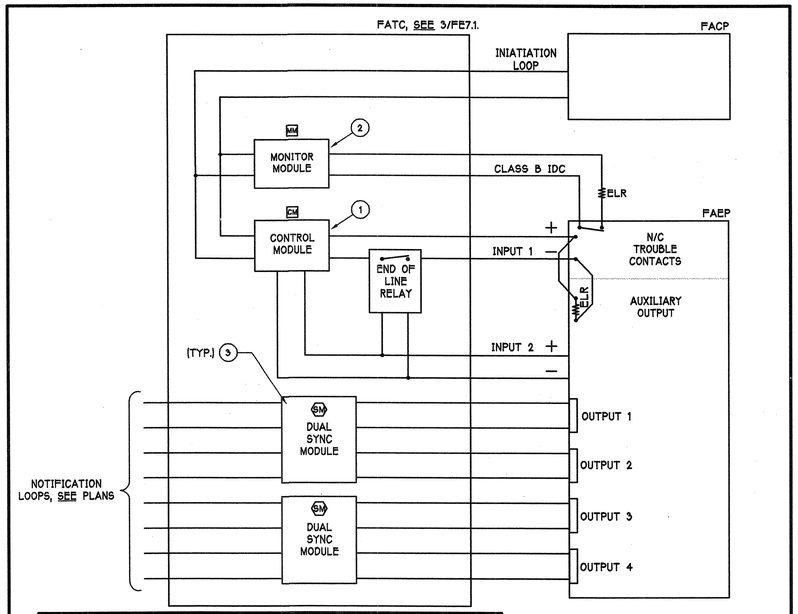

NUMBERED DETAIL NOTES

1. USE ADDRESSABLE CONTROL MODULES TO ACTIVATE THE FAEP (FIRE ALARM EXPANDER PANEL).
2. AN ADDRESSABLE MONITOR MODULE IS USED TO SENSE FAEP TROUBLE CONDITIONS. LOCAL AUXILIARY POWER OUTPUT FROM THE FAEP PROVIDES POWER TO THE ADDRESSABLE CONTROL MODULE.
3. DUAL SYNC MODULES FOR SYNCRONIZING NOTIFICATION DEVICES. SEE 4/FE7.1, FIG. 2. ALL SYNC MODULES SHALL BE CONNECTED FOR SYNCRONIZED OPERATION. SEE 4/FE7.1, FIG. 1.

FAEP PANEL CIRCUITING DETAIL

SCALE: NONE

7/FE7.1

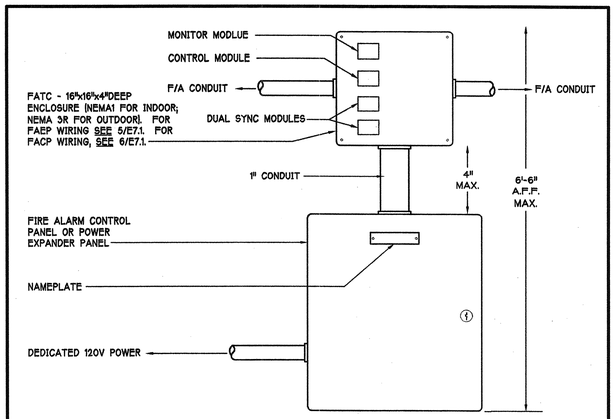

FAEP MOUNTING DETAIL

SCALE:NONE
FILE:

4/FE7.1

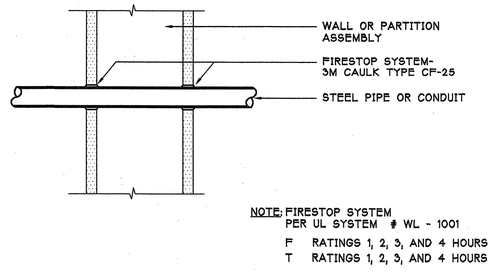

FIRE RATED CONDUIT PENETRATION DETAIL

SCALE: NONE
FILE:

1/FE7.2

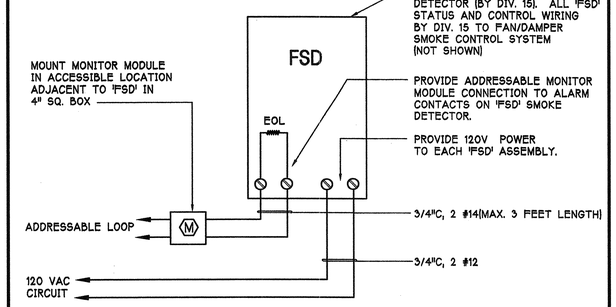

FIRE DAMPER WITH INTEGRAL SMOKE DETECTOR

SCALE: NONE
FILE: L:\POWER\FIREALRM\PF1RE004

5/FE7.1

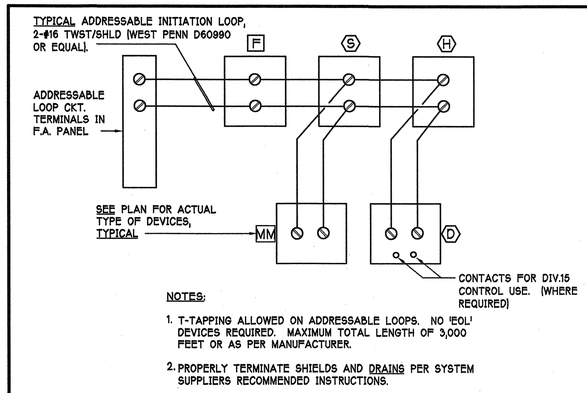

NOTES:

1. T-TAPPING ALLOWED ON ADDRESSABLE LOOPS. NO 'EOL' DEVICES REQUIRED. MAXIMUM TOTAL LENGTH OF 3,000 FEET OR AS PER MANUFACTURER.
2. PROPERLY TERMINATE SHIELDS AND DRAINS PER SYSTEM SUPPLIERS RECOMMENDED INSTRUCTIONS.

TYPICAL ADDRESSABLE INITIATION LOOP WIRING

SCALE: NONE

2/FE7.1

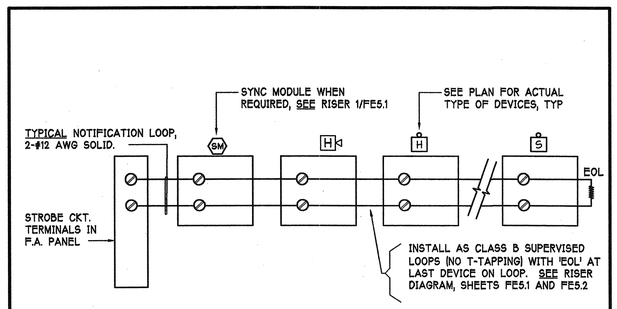

TYPICAL NOTIFICATION CIRCUIT LOOP WIRING

SCALE: NONE

6/FE7.1

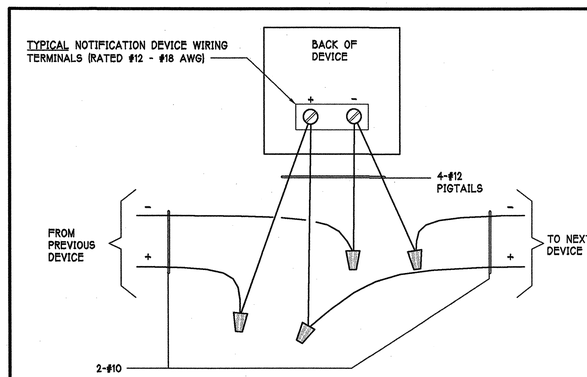

#10 PIGTAIL DETAIL

SCALE: NONE

3/FE7.1

O'MAHONY & MYER
ELECTRICAL and LIGHTING DESIGN
4340 REDWOOD HWY., SUITE 245
SAN RAFAEL, CALIFORNIA 94903
(415) 492-0420/FAX (415) 479-9662
www.omm consulting.com

DIABLO VALLEY COLLEGE

DIABLO VALLEY COLLEGE NEW BOOKSTORE

321 GOLF CLUB RD.
PLEASANT HILL, CALIFORNIA

REGISTERED PROFESSIONAL ENGINEER PAUL C. COLPO EXPANDER No.14738 Exp. 6/07 ELECTRICAL STATE OF CALIFORNIA

DATE: 23 JULY, 2004

REVISIONS:

BID SET

SHEET TITLE:

FIRE ALARM DETAILS

IDENTIFICATION STAMP
DIVISION OF THE STATE ARCHITECT
105925
APPL 01
AC LE FLS EO SS AL
DATE: 5-12-04 JUL 26 2004

BLDG. ID: 098
ID CODE: 312098-109.01-A

DRAWN BY:
CHECKED BY: PC
JOB NO: 203066

SHEET FE7.1

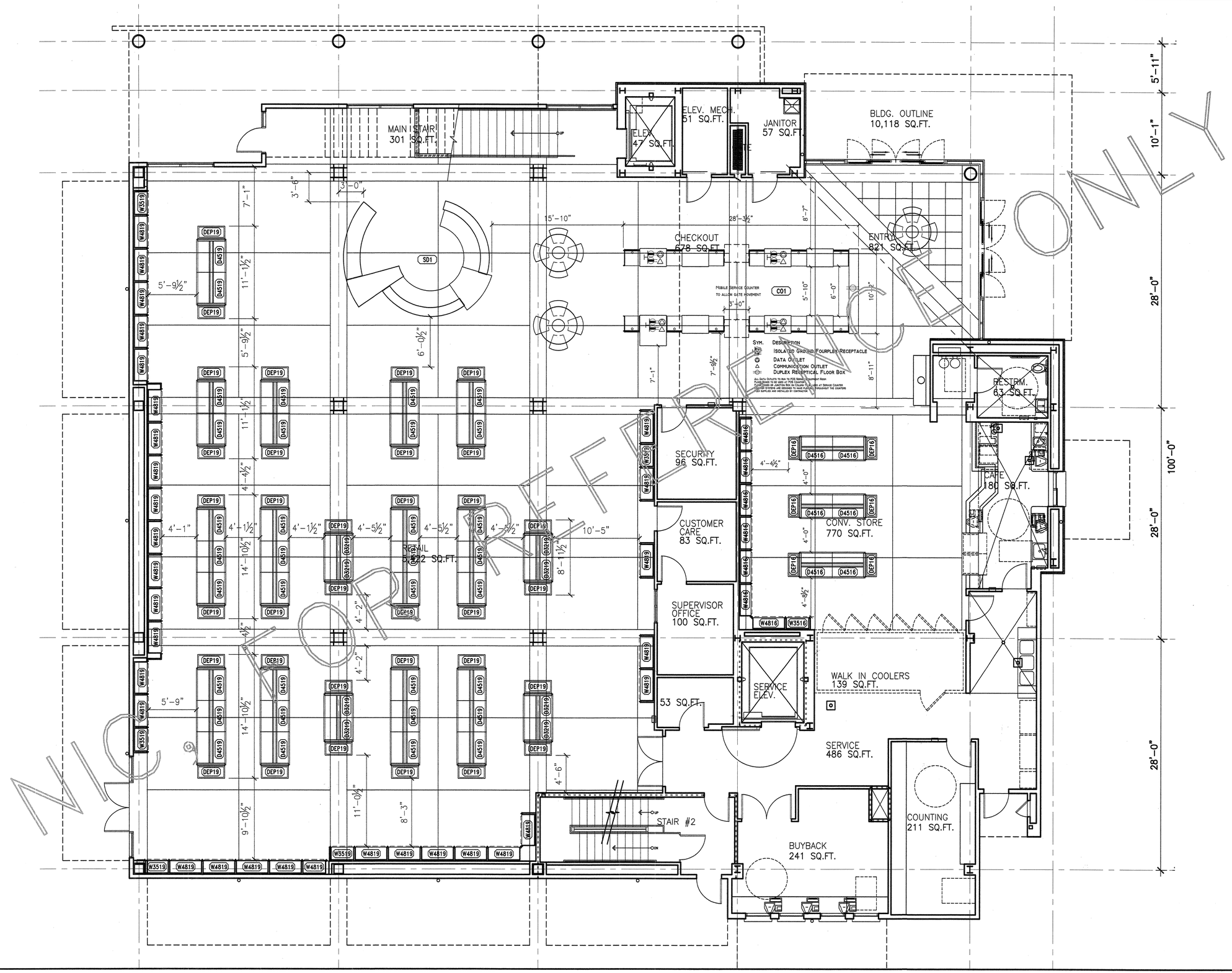

Nebraska Book Company

COLLEGE STORE DESIGN

DIABLO VALLEY COLLEGE

DIABLO VALLEY COLLEGE NEW BOOKSTORE

321 GOLF CLUB RD.
PLEASANT HILL, CALIFORNIA

DATE: 23 JULY, 2004

STATE OF CALIFORNIA
JOHN S. ASHWORTH
C 26747
LICENSED ARCHITECT

BID SET

SHEET TITLE:

FIXTURE FLOOR PLAN

IDENTIFICATION STAMP
DIVISION OF THE STATE ARCHITECT
105925
APPL 01
AC LE FLS ED SS A1
DATE: 5-12-04 JUL 26 2004

BLDG. ID: 098
ID CODE: 312098-109.01-A

DRAWN BY: RSE
CHECKED BY:
JOB NO:

SHEET
D1.0

5/04/04 STORE1.DWG

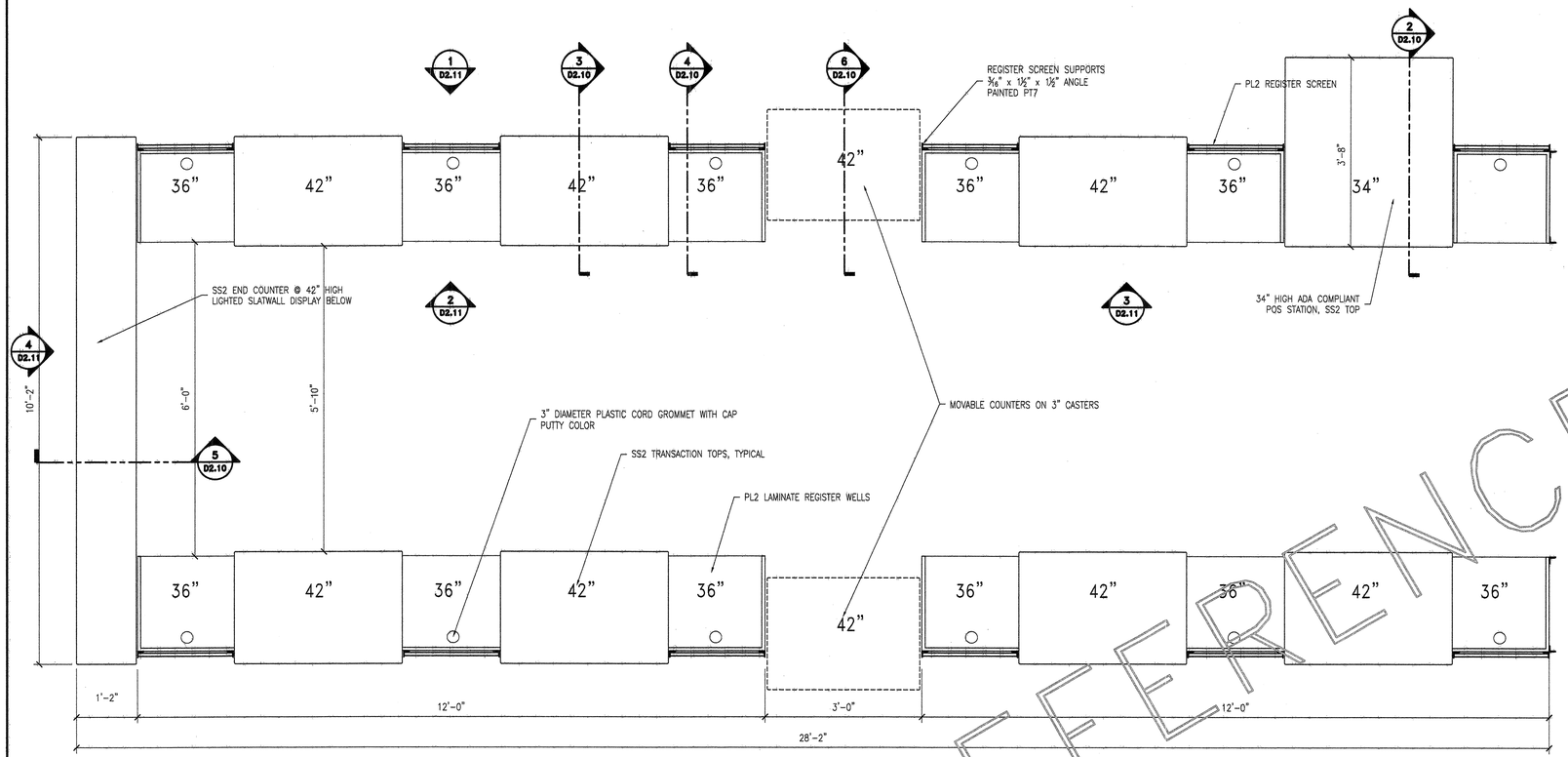

1 PLAN
3/4" = 1'-0"

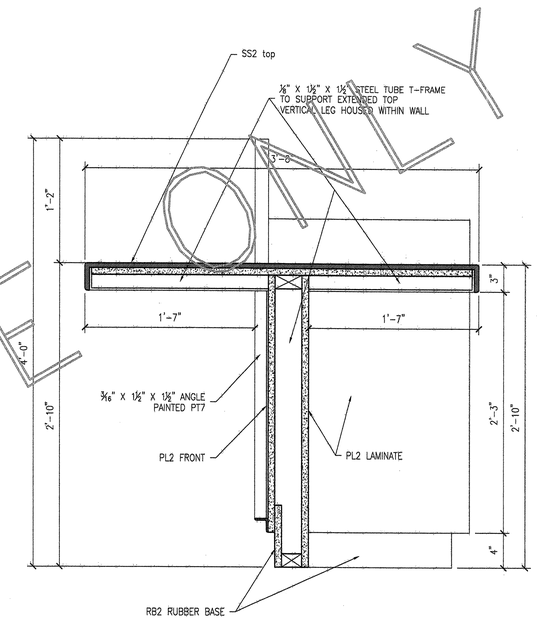

2 SECTION
1-1/2" = 1'-0"

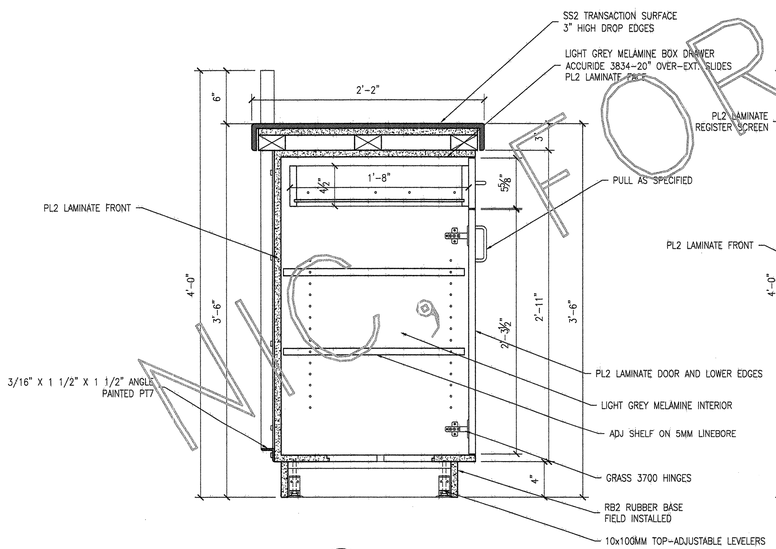

3 SECTION
1-1/2" = 1'-0"

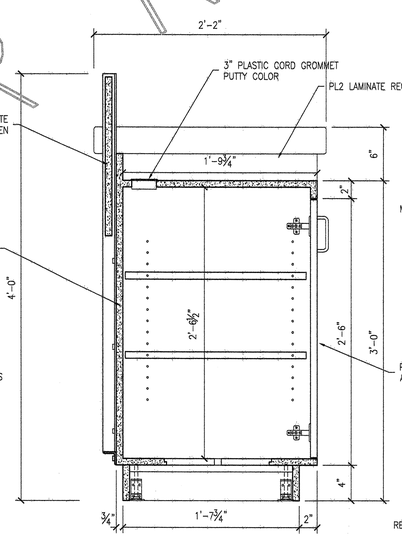

4 SECTION
1-1/2" = 1'-0"

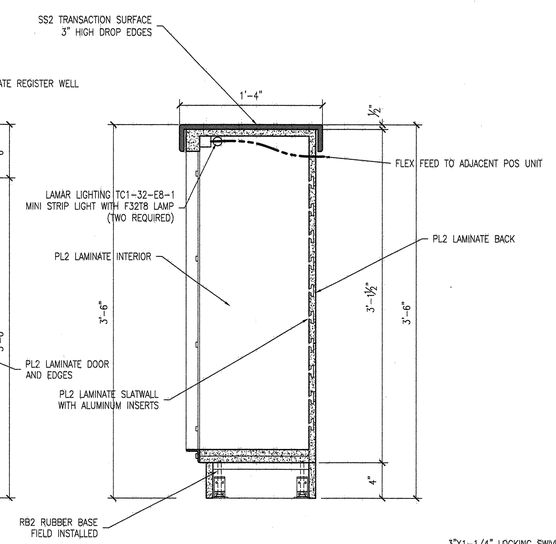

5 SECTION
1-1/2" = 1'-0"

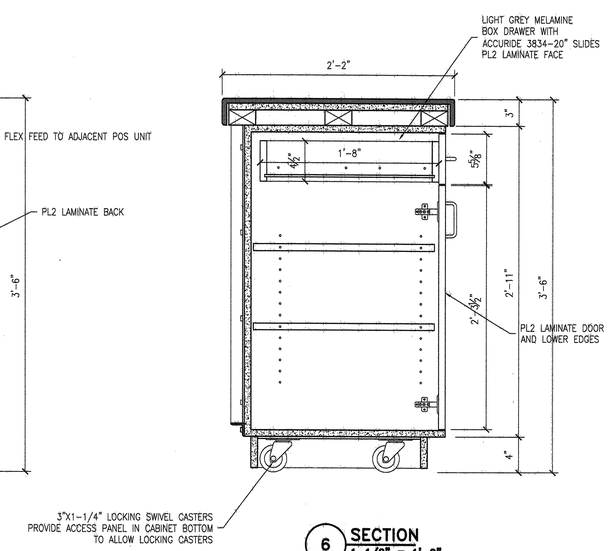

6 SECTION
1-1/2" = 1'-0"

NOT FOR REFERENCE ONLY

Nebraska Book Company
COLLEGE STORE DESIGN

DIABLO VALLEY COLLEGE

DIABLO VALLEY COLLEGE NEW BOOKSTORE

321 GOLF CLUB RD.
PLEASANT HILL, CALIFORNIA

DATE: 23 JULY, 2004

STATE OF CALIFORNIA
JOHN S. ASHWORTH
C 26747
LICENSED ARCHITECT

BID SET

SHEET TITLE:
CO1 CHECKOUTS

IDENTIFICATION STAMP
DIVISION OF THE STATE ARCHITECT
105925
APPL 01
AC LE FLS EO SS AI
DATE: 5-12-04 JUL 26 2004

BLDG. ID: 098
ID CODE: 312098-109.01-A

DRAWN BY: RSE
CHECKED BY:
JOB NO:

SHEET
D2.10

5/4/04 D2.1.DWG

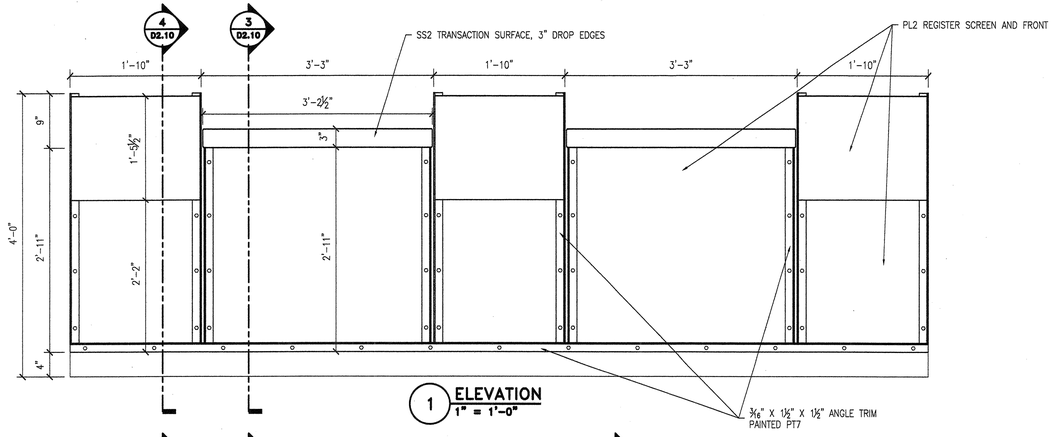

1 ELEVATION
1" = 1'-0"

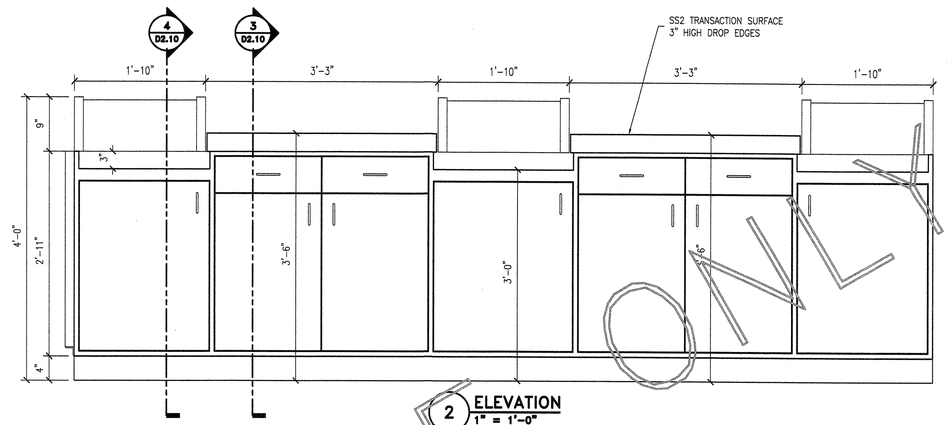

2 ELEVATION
1" = 1'-0"

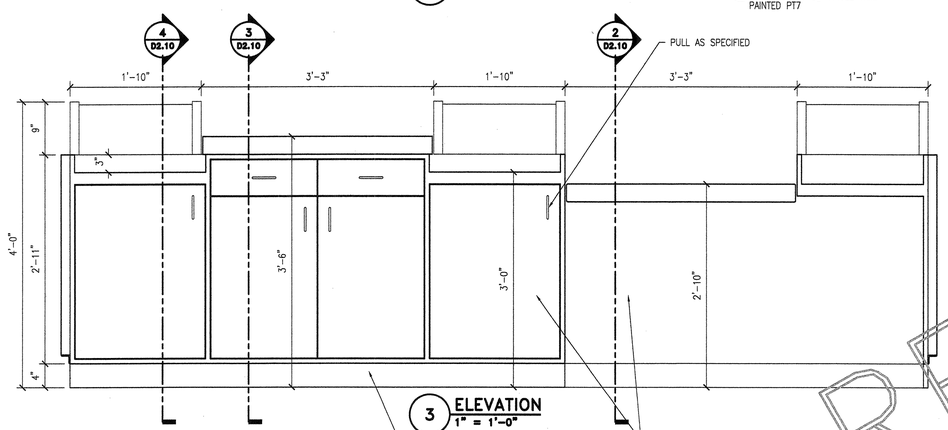

3 ELEVATION
1" = 1'-0"

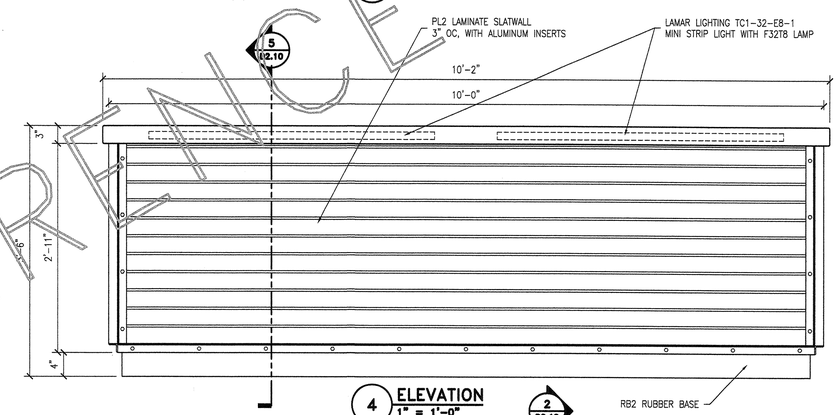

4 ELEVATION
1" = 1'-0"

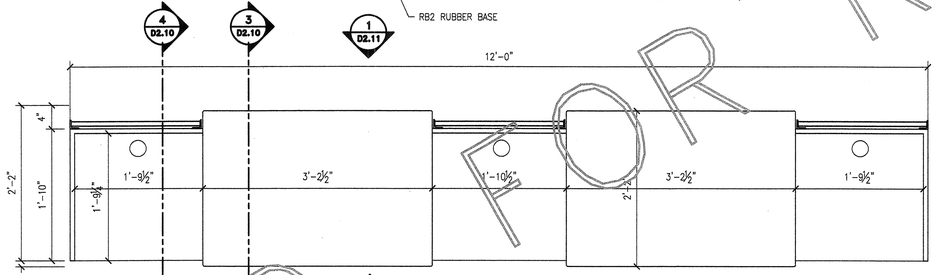

2 D2.11
5 PLAN
1" = 1'-0"

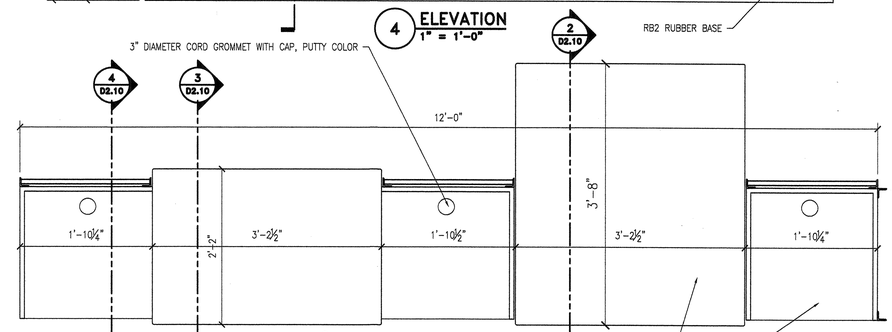

3 D2.11
6 PLAN
1" = 1'-0"

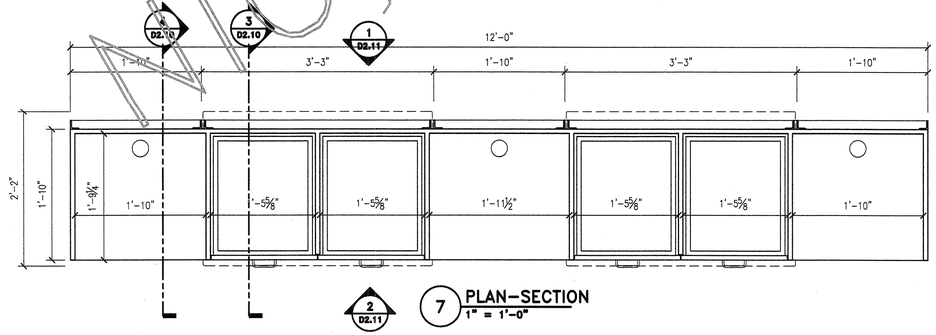

2 D2.11
7 PLAN-SECTION
1" = 1'-0"

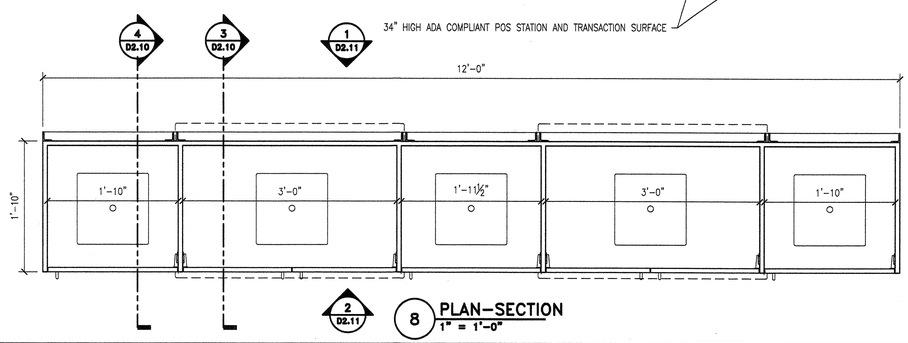

2 D2.11
8 PLAN-SECTION
1" = 1'-0"

NIC FOR REFERENCE ONLY

Nebraska Book Company

COLLEGE STORE DESIGN

DIABLO VALLEY COLLEGE

DIABLO VALLEY COLLEGE NEW BOOKSTORE

321 GOLF CLUB RD.
PLEASANT HILL, CALIFORNIA

DATE: 23 JULY, 2004

STATE OF CALIFORNIA
JOHN S. ASHWORTH
C 26747
LICENSED ARCHITECT

BID SET

SHEET TITLE:

CO1 CHECKOUTS

IDENTIFICATION STAMP
DIVISION OF THE STATE ARCHITECT
105925
APPL 01
AC LE FLS ED SS AI
DATE: 5-12-04 JUL 26 2004

BLDG. ID: 098
ID CODE: 312098-109.01-A

DRAWN BY: RSE
CHECKED BY:
JOB NO:

SHEET D2.11

5/4/04 D2.1.DWG

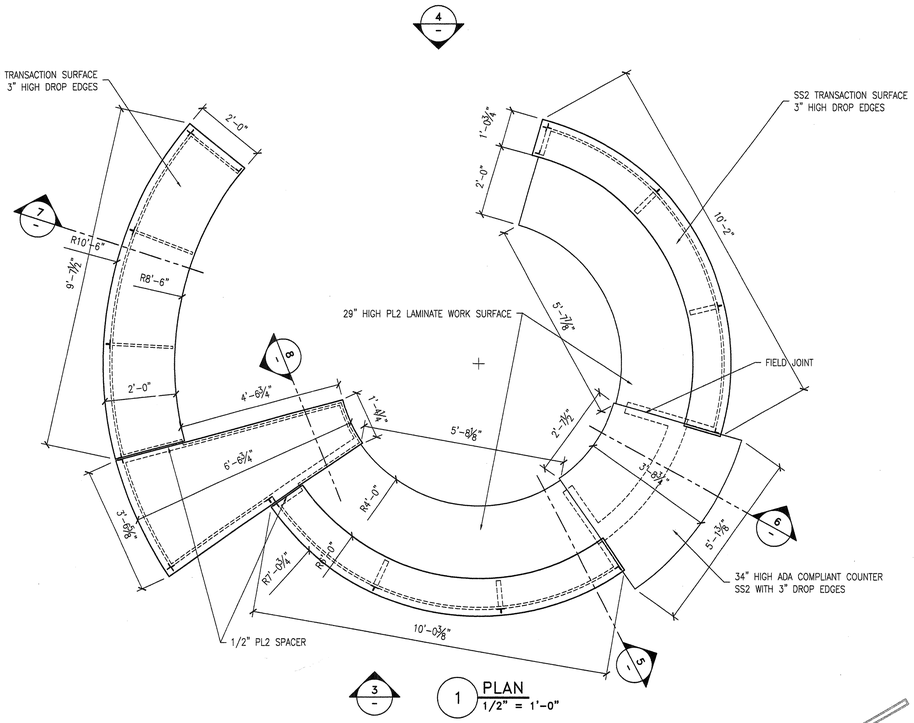

1 PLAN
1/2" = 1'-0"

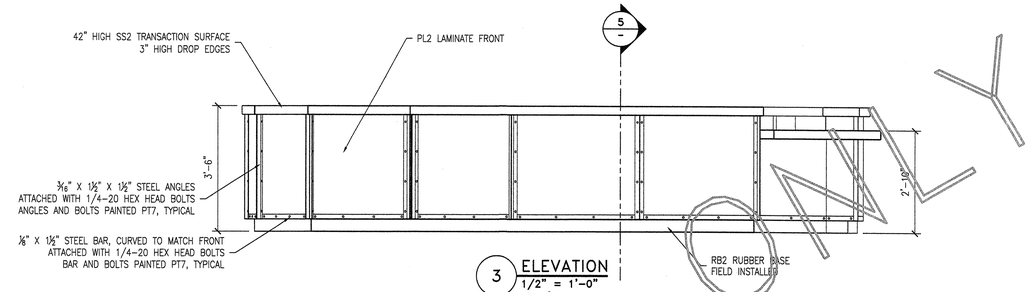

3 ELEVATION
1/2" = 1'-0"

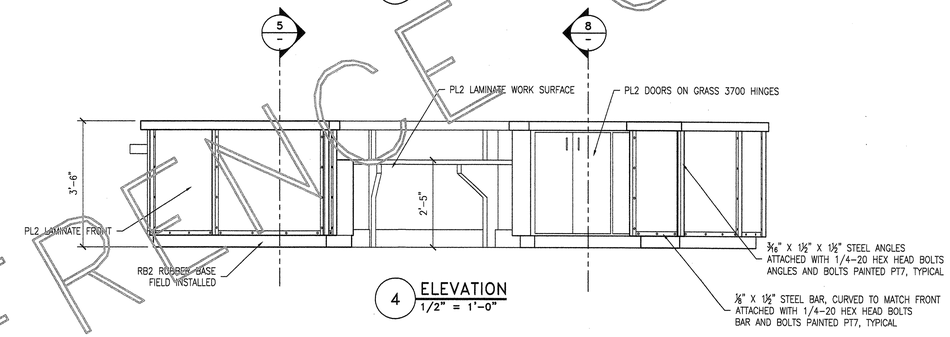

4 ELEVATION
1/2" = 1'-0"

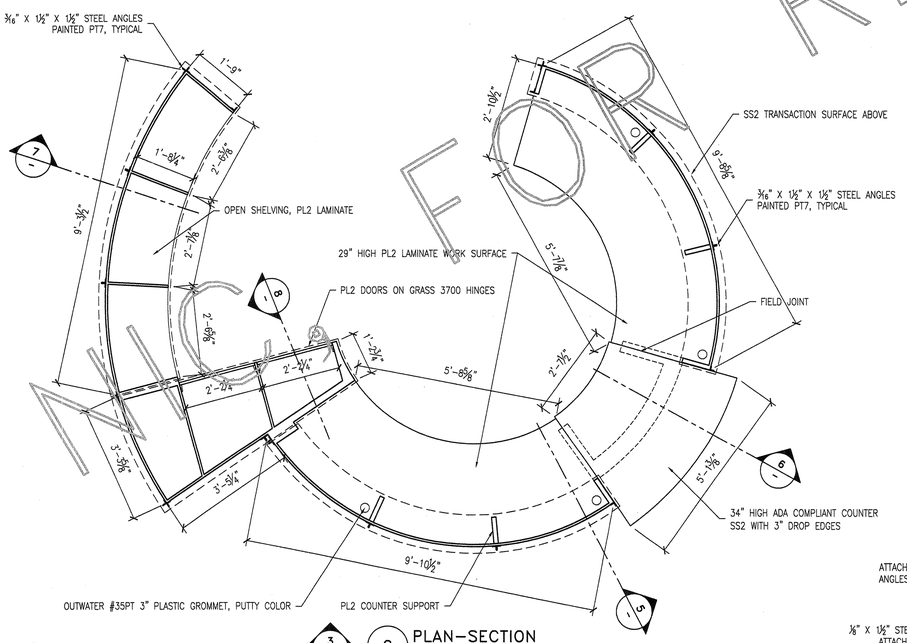

2 PLAN-SECTION
1/2" = 1'-0"

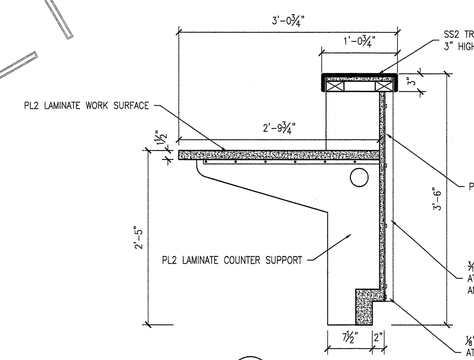

5 SECTION
1" = 1'-0"

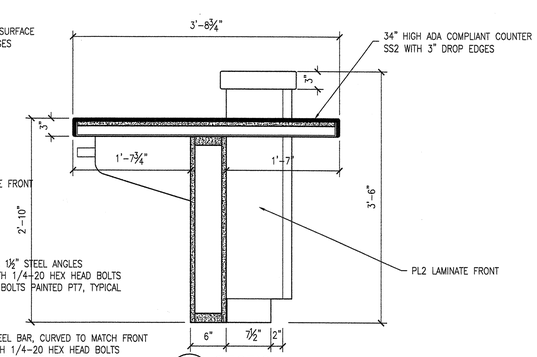

6 SECTION
1" = 1'-0"

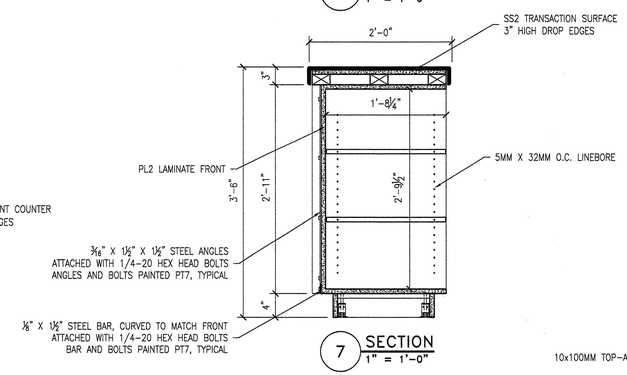

7 SECTION
1" = 1'-0"

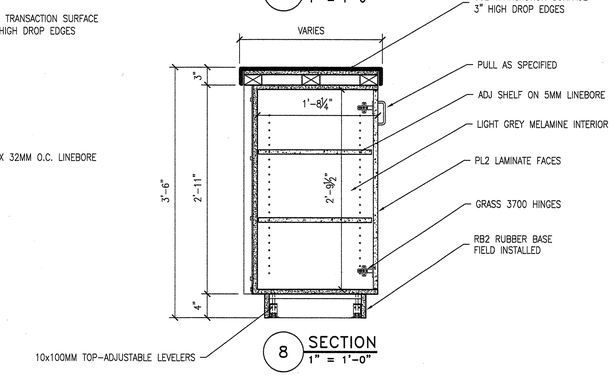

8 SECTION
1" = 1'-0"

MADE FOR REFERENCE ONLY

Nebraska Book Company
COLLEGE STORE DESIGN

DIABLO VALLEY COLLEGE

DIABLO VALLEY COLLEGE NEW BOOKSTORE

321 GOLF CLUB RD.
PLEASANT HILL, CALIFORNIA

DATE: 23 JULY, 2004

STATE OF CALIFORNIA
JOHN S. ASHWORTH
C 26747
LICENSED ARCHITECT

BID SET

SHEET TITLE:

SD1 SERVICE DESK

IDENTIFICATION STAMP
DIVISION OF THE STATE ARCHITECT
105925
APPL 01
AC LE FLS ED SS 41
DATE: 5-12-04 JUL 26 2004

BLDG. ID: 098
ID CODE: 312098-109.01-A

DRAWN BY: RSE
CHECKED BY:
JOB NO:

SHEET D2.20

5/4/04 D2.2.DWG

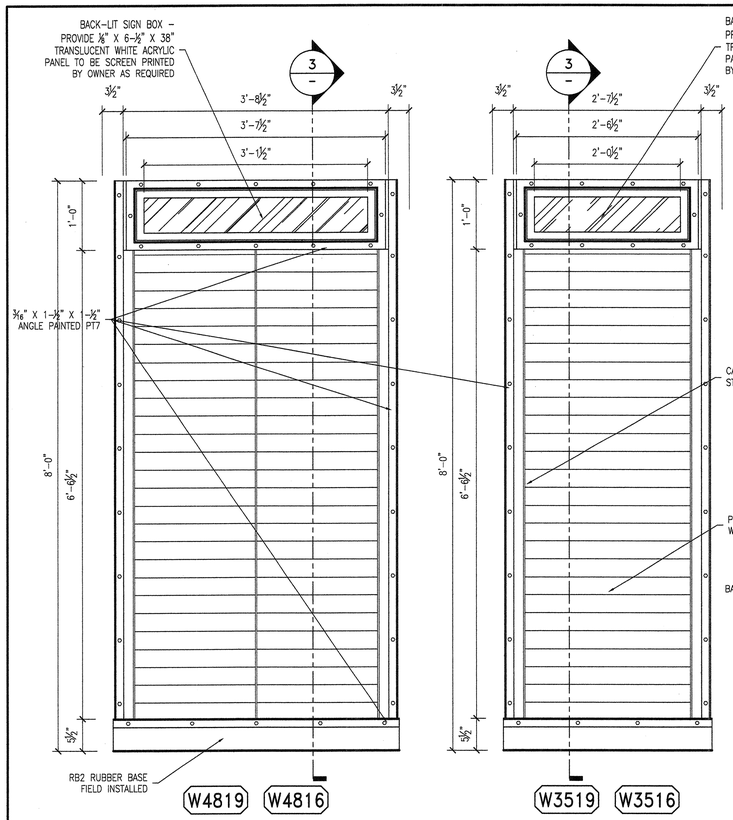

1 ELEVATION
1" = 1'-0"

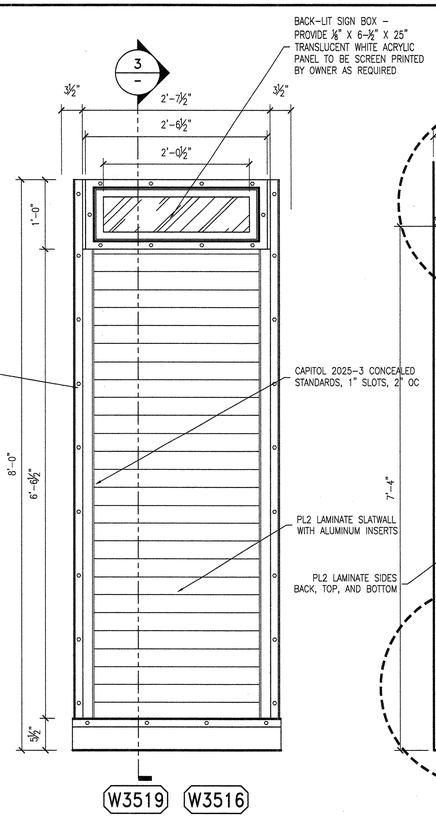

2 ELEVATION
1" = 1'-0"

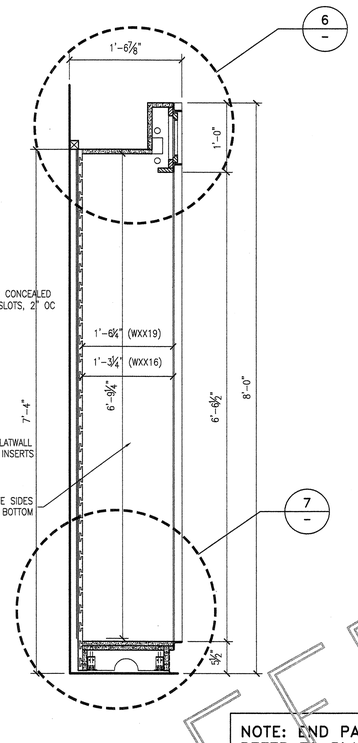

3 SECTION
1" = 1'-0"

NOTE: END PANEL CONFIGURATION VARIES. REFER TO PLAN FOR SPECIFICS

PROVIDE 5 ADJUSTABLE SHELVES PER CASE WITH BRACKETS TO FIT STANDARDS SHELVES ARE TO BE ¾" CORE STOCK WITH PL2 LAMINATE BOTH FACES AND 2MM PVC TO MATCH PL2, ALL EDGES

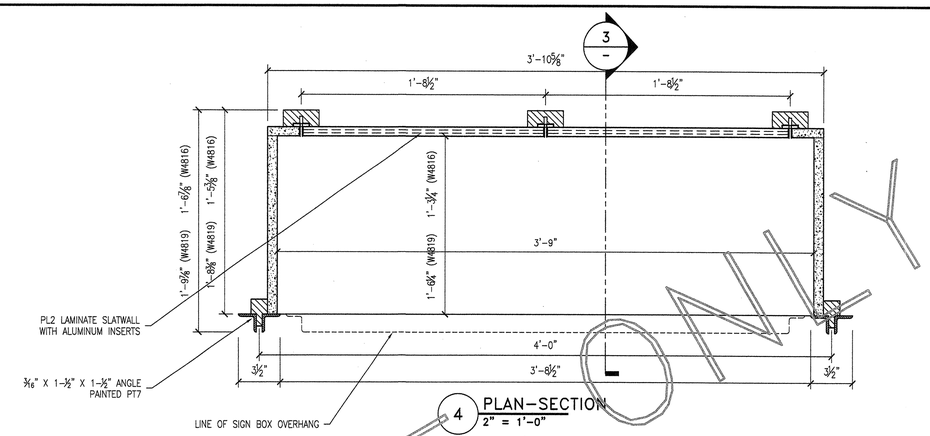

4 PLAN-SECTION
2" = 1'-0"

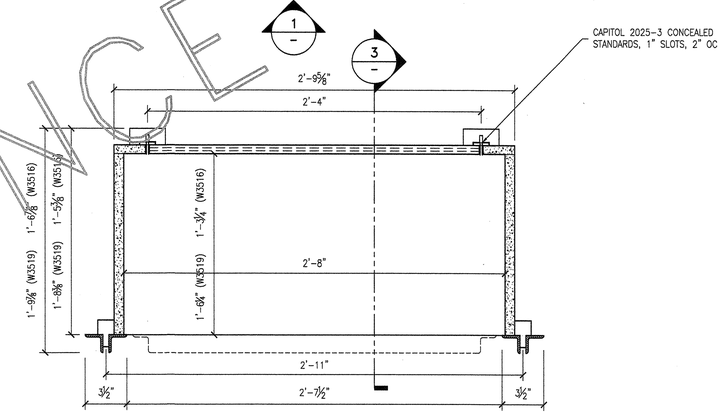

5 PLAN-SECTION
2" = 1'-0"

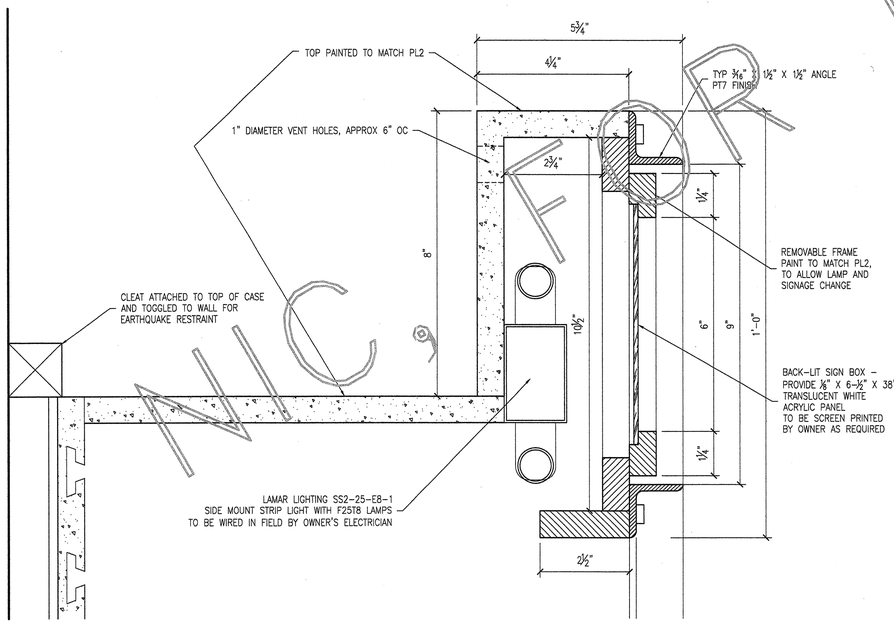

6 DETAIL AT TOP
6" = 1'-0"

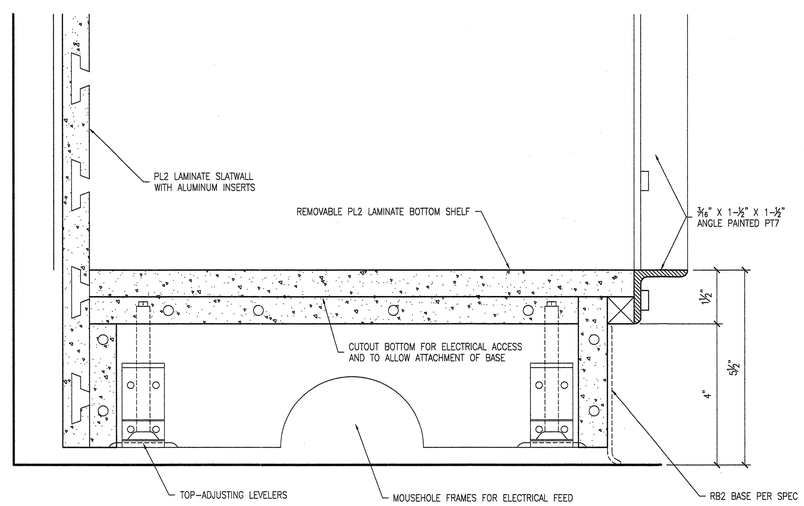

7 DETAIL AT BOTTOM
6" = 1'-0"

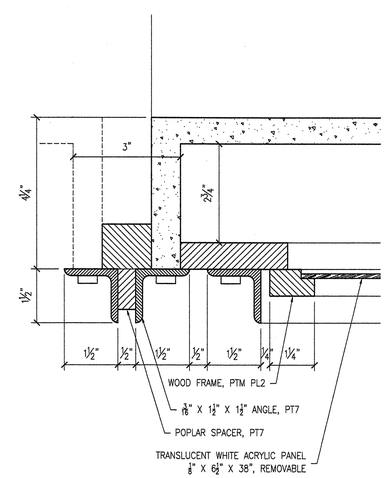

8 DETAIL AT CASE JOINT
6" = 1'-0"

NOT FOR REFERENCE ONLY

Nebraska Book Company
COLLEGE STORE DESIGN

DIABLO VALLEY COLLEGE

DIABLO VALLEY COLLEGE NEW BOOKSTORE

321 GOLF CLUB RD.
PLEASANT HILL, CALIFORNIA

DATE: 23 JULY, 2004

STATE OF CALIFORNIA
JOHN S. ASHWORTH
C 26747
LICENSED ARCHITECT

BID SET

SHEET TITLE:
WXXXX WALL CASE

IDENTIFICATION STAMP
DIVISION OF THE STATE ARCHITECT
105925
APPL 01
AC LE FLS EO SS AJ
DATE: 5-12-04 JUL 26 2004

BLDG. ID: 098
ID CODE: 312098-109.01-A

DRAWN BY: RSE
CHECKED BY:
JOB NO:

SHEET D2.30

5/4/04 D2.30.DWG

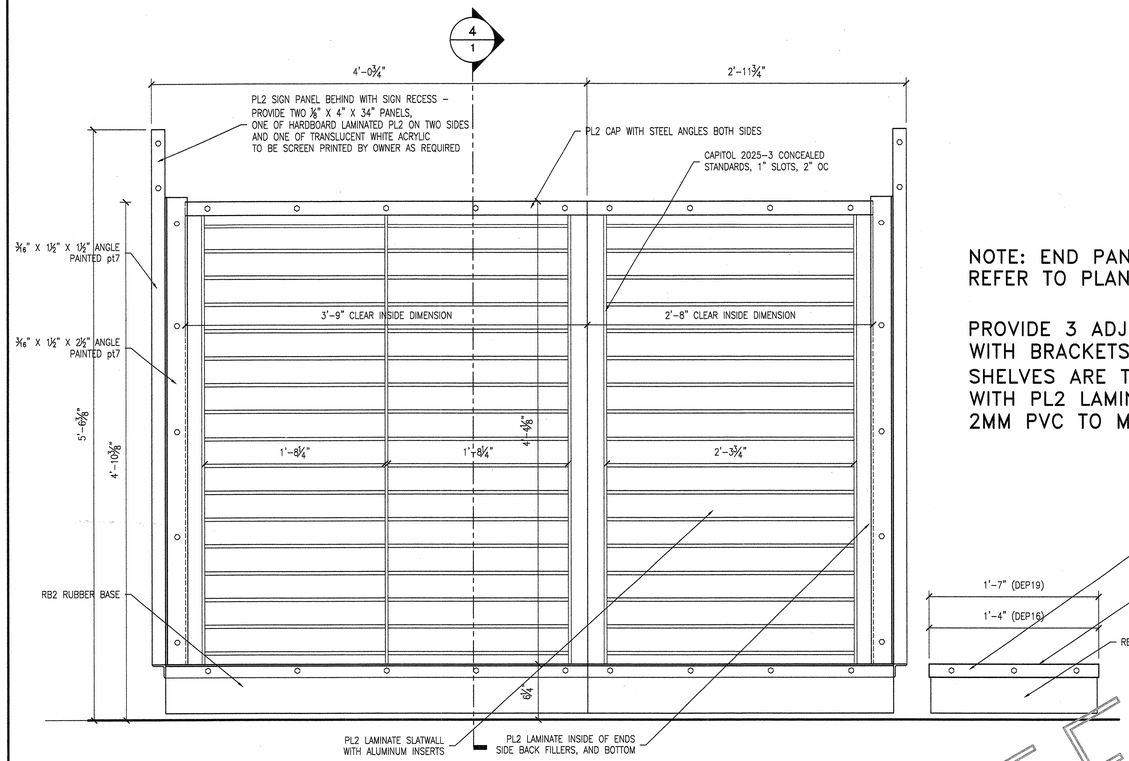

1 ELEVATION
1-1/2" = 1'-0"

NOTE: END PANEL CONFIGURATION VARIES. REFER TO PLAN FOR SPECIFICS

PROVIDE 3 ADJUSTABLE SHELVES PER BAY WITH BRACKETS TO FIT STANDARDS SHELVES ARE TO BE ¾" CORE STOCK WITH PL2 LAMINATE BOTH FACES AND 2MM PVC TO MATCH PL2, ALL EDGES

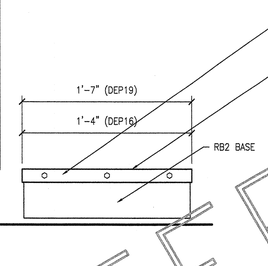

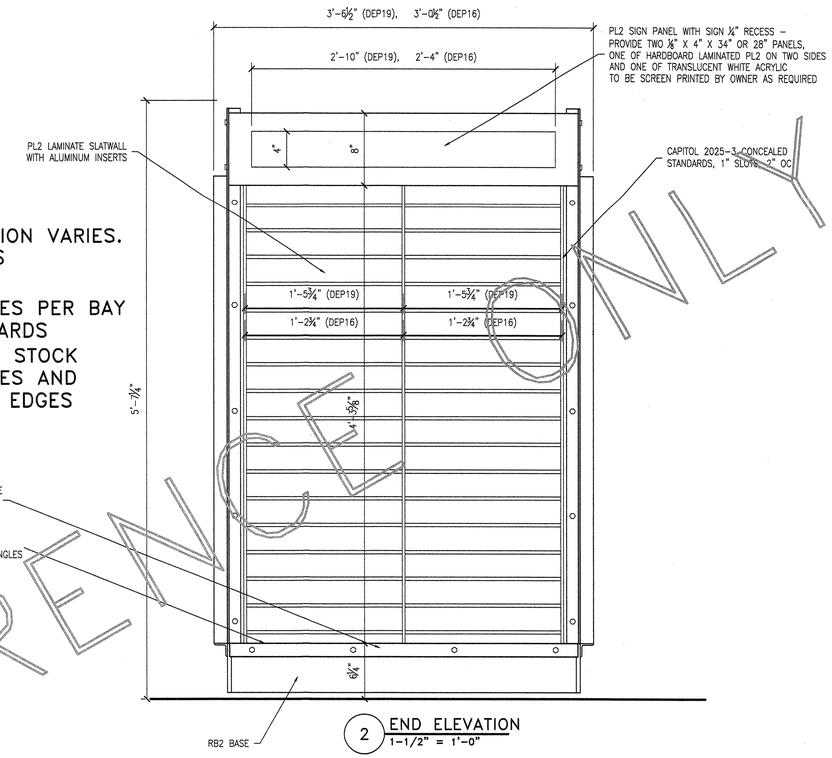

2 END ELEVATION
1-1/2" = 1'-0"

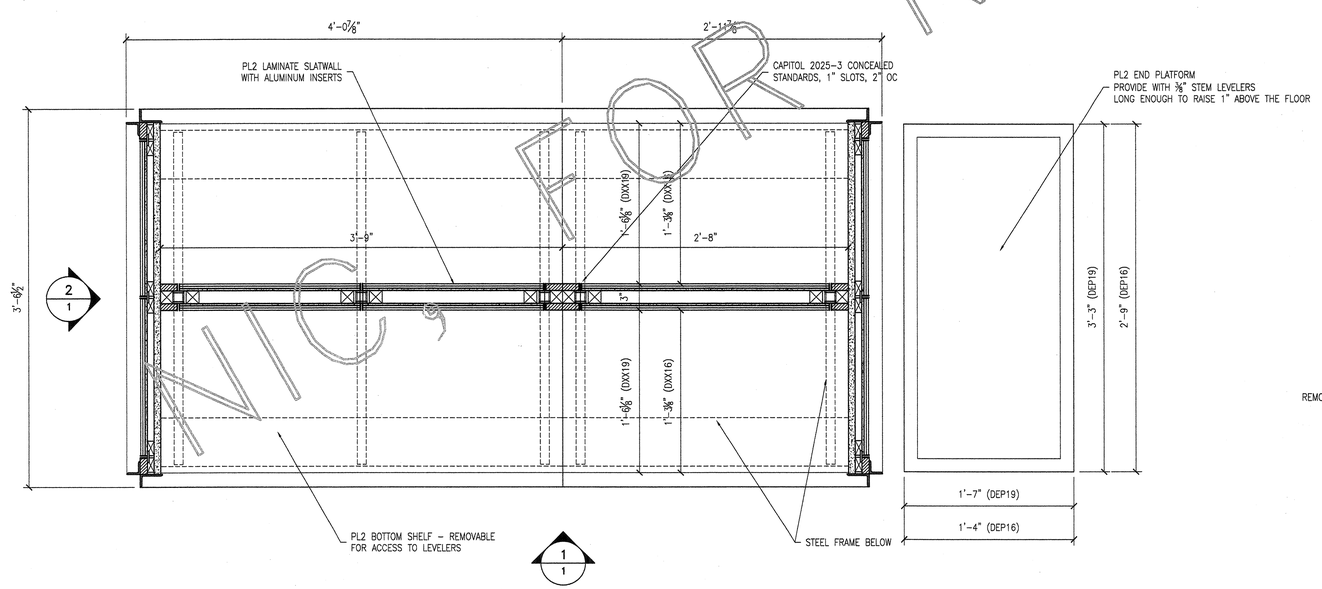

3 PLAN-SECTION
1-1/2" = 1'-0"

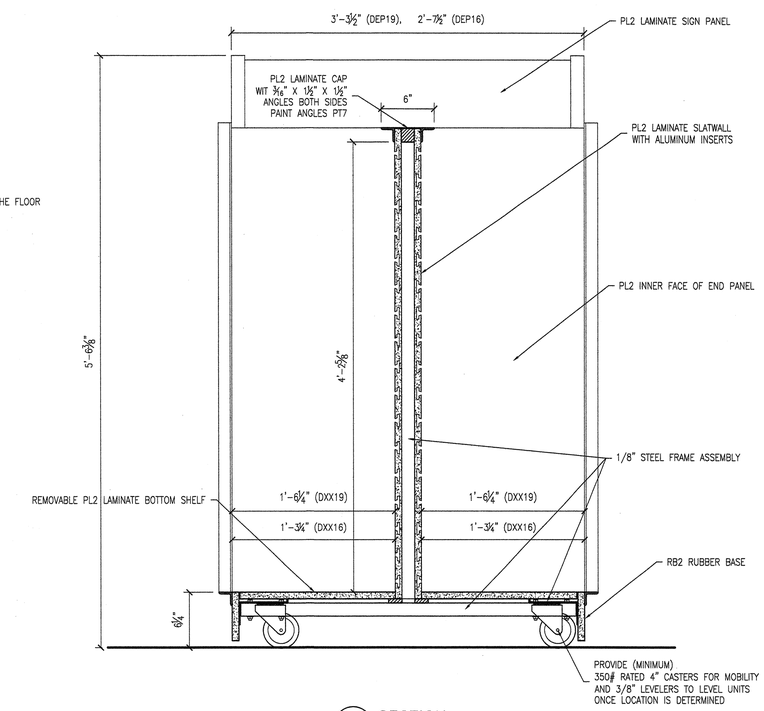

4 SECTION
1-1/2" = 1'-0"

NTC, FOR REFERENCE ONLY

Nebraska Book Company
COLLEGE STORE DESIGN

DIABLO VALLEY COLLEGE

DIABLO VALLEY COLLEGE NEW BOOKSTORE

321 GOLF CLUB RD.
PLEASANT HILL, CALIFORNIA

DATE: 23 JULY, 2004

STATE OF CALIFORNIA
C. ASHWORTH
C 26747
LICENSED ARCHITECT

BID SET

SHEET TITLE:

DXXXX DISPLAY BOOKCASES

IDENTIFICATION STAMP
DIVISION OF THE STATE ARCHITECT
105925
APPL 01
AC LE FLS ED SS AI
DATE: 5-12-04 JUL 26 2004

BLDG. ID: 098
ID CODE: 312098-109.01-A

DRAWN BY: RSE
CHECKED BY:
JOB NO:

SHEET D2.40

5/4/04 D2.4.DWG