L-1201 Science Building BAS

2700 E Leland Rd.

Pittsburg, CA 94565

As Prepared By:

Sunbelt Controls

4511 Willow Road, Suite 4

Pleasanton, CA 94588

T: 925-660-3896 F: 925-660-3933

PROJECT TEAM

Client Name:	Contra Costa Community College District
Owner:	Contra Costa Community College District
Consulting Engineer:	Taylor Engineers
Sunbelt Design Engineer:	Nick Sireci
Sunbelt Project Manager:	Andy Bruch
Project Number:	80860787
Drawing Designation:	As-Built
Drawing Date:	10/11/2023

4511 Willow Road, Ste 4
Pleasanton, CA 94588
PH: 925.660.3900
FX: 925.660.3933

THE WITHIN DESIGN IS EXCLUSIVELY OWNED BY Sunbelt Controls, AND IS NOT INTENDED FOR PUBLICATION. EXHIBITION HEREOF IS SOLELY FOR THE PURPOSE OF EFFECTING A SALE OR TRANSFER OF THE DELINEATED AIR CONDITIONING, REFRIGERATION AND OR CONTROLS INSTALLATION

DDC CONTROLS CONTRACTOR
Sunbelt Controls
4511 Willow Road, Ste 4
Pleasanton, CA 94588
PH: 925.650.3900
FAX: 925.650.3933

AUTOMATEDLOGIC® CORPORATION

REV	DESCRIPTION	DATE	BY
0	As-Built	10/11/23	NS

REVISION

Project: **L-1201 Science Building BAS**
Pittsburg, CA 94565

TBD
Programmer

TBD
Lead Technician

LEGEND

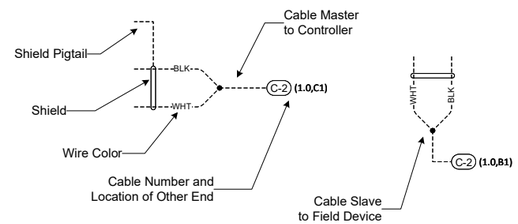

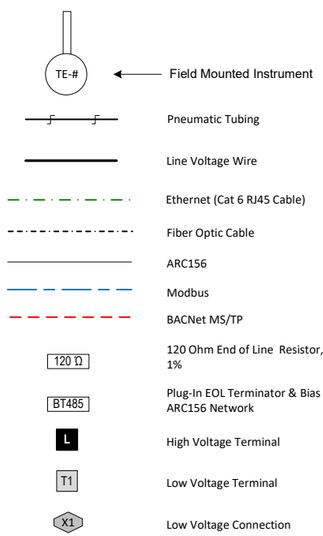

Miscellaneous Notations

FLP = Fails At Last Position
FC = Fails Closed
FO = Fails Open

TAG DESCRIPTIONS

AA	Remote Annunciator Module & Auto Dialer	P	Pressure Probe
ALC	Automated Logic Controller	PDS	Pressure Differential Switch
ASA	Smoke Detector	PDT	Pressure Differential Transmitter
CR	Control Relay	PS	Pressure Switch
ENC	Enclosure	PT	Pressure Transmitter
ES	Direct Current Power Supply	QT	Gas Transmitter
FCV	Flow Control Valve / Damper Actuator	ST	Speed Transmitter
FE	Flow Element	SUB	Subpanel
FS	Flow Switch	TE	Temperature Element
FT	Flow Transmitter	TS	Temperature Switch
G	Generic Device	TSH	Temperature Switch High
IP	Electro-Pneumatic Transducer	TSL	Temperature Switch Low
IS	Current Switch	TT	Temperature Transmitter
ISE	Circuit Breaker	TY	Dew Pt./Enthaply/Wet Bulb Transducer
IT	Current Transducer	V	Valve
JT	BTU Meter	VT	Vibration Transmitter / Switch
JY	Power Meter	X	Unclassified
KS	Electronic Timeclock	XF	Transformer
LS	Level Switch	YKS	Position Transmitter
LT	Level Transmitter	YL	Position Transmitter
MS	Humidistat	YS	Leak Detector
MT	Humidity Transmitter	YSE	Emergency Stop
MTE	Humidity Transmitter w/ Temperature Element	YY	Transducer
MTT	Humidity Transmitter w/ Temperature Transmitter	ZS	Position Indicating Switch
N	Accessories	ZT	Position Transmitter
NY	Network Device		

Cable Specifications

SUNBELT CONTROLS STANDARD CABLE SPECIFICATIONS AND ABBREVIATIONS FOR ALC

Cable Line Types	Connect Air Part Number 209-221-6900	Windy City Part Number 1-800-379-1191	Faster Cable Part Number 1-800-819-2042	Wire Type	Typical Application	Circuit Type	Conductor Color	Jacket Color
22/2 SHLD (ARCnet) 22/2 SHLD (ARCnet)	*W221P-2227RIB (GREEN JKT)* *W221P-2227SNBT (ORANGE JKT)* *or Sunbelt Controls approved equivalent* *W221P-1876 for wet locations.*	043006AL (Green) 043004AL (Orange) or Sunbelt Controls approved equivalent	CARC156-GRN (Green) CARC156-ORG (Orange) or Sunbelt Controls approved equivalent	*22 AWG / 2 Conductors; Stranded, shielded, plenum rated & twisted pair. Low Capacitance*	*ARC156*	*NET+* *NET-*	*WHITE* *BLACK*	*GREEN JACKET.* *USE ORANGE JACKET FOR SUB-NETWORKS*
22/2 SHLD (MSTP) 22/2 SHLD (MSTP)	*W221P-2227BLUB (BLUE JACKET)* *or Sunbelt Controls approved equivalent*	043009AL or Sunbelt Controls approved equivalent	CARC156-BLU or Sunbelt Controls approved equivalent	*22 AWG / 2 Conductors; Stranded, shielded, plenum rated & twisted pair. Low Capacitance.*	*BACnet MS/TP*	*NET+* *NET-*	*WHITE* *BLACK*	*BLUE JACKET*
22/2 SHLD (MODBUS) 22/2 SHLD (MODBUS)	*W221P-2227YRB* *or Sunbelt Controls approved equivalent*	0043230ALR or Sunbelt Controls approved equivalent	CARC156-YEL or Sunbelt Controls approved equivalent	*22 AWG / 2 Conductors; Stranded, shielded, plenum rated & twisted pair. Low Capacitance.*	*MODBUS COMMUNICATION*	*NET+* *NET-*	WHITE BLACK	*YELLOW JACKET*
CAT-5e ETHERNET CAT 5e ETHERNET	*W244P-2175* *or Sunbelt Controls approved equivalent*	555619 or Sunbelt Controls approved equivalent	TUP2404P03BU or Sunbelt Controls approved equivalent	*24 AWG / 4 Pairs, twisted, plenum rated.*	*NETWORK WIRE*	*NETWORK COMMUNICATIONS*		*BLUE JACKET*
CAT-6 (ETHERNET) CAT-6 (Ethernet)	*W244P-2274BL* *or Sunbelt Controls approved equivalent*	556609 or Sunbelt Controls approved equivalent	C6P550NSBU or Sunbelt Controls approved equivalent	*24 AWG / 4 Pairs, twisted, plenum rated.*	*NETWORK WIRE*	*NETWORK COMMUNICATIONS*		*BLUE JACKET*
22/4 SHLD (T-STAT) 22/4 SHLD (T-STAT)	*W224C-2020SNBT* *or Sunbelt Controls approved equivalent.*	4151150SNBT or Sunbelt Controls approved equivalent	P224CS-PUR or Sunbelt Controls approved equivalent	*22 AWG / 4 Conductors; Stranded, shielded, plenum rated & double pair.*	*AUTOMATED LOGIC T-STAT*	*12V* *GND* *NET+* *NET-*	*RED* *GREEN* *WHITE* *BLACK*	*PURPLE JACKET*
14/2 UNSHLD (24VAC) 14/2 UNSHLD (24 VAC)	*W141P-2013SUNBELT* *or Sunbelt Controls approved equivalent*	007961BRSNBT or Sunbelt Controls approved equivalent	P142C-WHT/RED or Sunbelt Controls approved equivalent	*14 AWG / 2 Conductors; Stranded, unshielded, plenum rated.THHN/THWN.*	*POWER WIRING (100-200ft)*	*24VAC POWER* *24VAC NEUTRAL*	*RED* *BLACK*	*WHITE JACKET W/ RED STRIPE*
16/2 UNSHLD (24VAC) 16/2 UNSHLD (24 VAC)	*W161P-2062WRDB* *or Sunbelt Controls approved equivalent*	001361BRSNBT or Sunbelt Controls approved equivalent	P162C-WHT/RED or Sunbelt Controls approved equivalent	*16 AWG / 2 Conductors; Stranded, unshielded, plenum rated.THHN/THWN.*	*POWER WIRING (0-100ft)*	*24VAC POWER* *24VAC NEUTRAL*	*RED* *BLACK*	*WHITE JACKET W/ RED STRIPE*
18/2 UNSHLD (FIELD) 18/2 UNSHLD (FIELD)	*W181P-2051RIB* *or* *W181P-2051SNBT* *or Sunbelt Controls approved equivalent.*	002360 or Sunbelt Controls approved equivalent	P182C-K1 or P182C-K1-WHT/PUR or Sunbelt Controls approved equivalent	*18 AWG / 2 Conductors; Stranded, unshielded, plenum rated & twisted pair.*	*I/O WIRING*	*INA* *INB* *CLASS 2 WIRING ONLY*	*WHITE, BLACK* *or* *RED, BLACK*	*WHITE JACKET* *WHITE W/ PURPLE STRIPE*
18/3 UNSHLD (FIELD) 18/3 UNSHLD (FIELD)	*W183C-2052RIB* *or Sunbelt Controls approved equivalent*	002370 or Sunbelt Controls approved equivalent	P183C or Sunbelt Controls approved equivalent	*18 AWG / 3 Conductors; Stranded, unshielded, plenum rated.*	*I/O WIRING*	*CLASS 2 WIRING ONLY*	*BLACK* *WHITE* *RED*	*WHITE JACKET*
18/4 UNSHLD (FIELD) 18/4 UNSHLD (FIELD)	*W184C-2099RIB* *or Sunbelt Controls approved equivalent*	002340 or Sunbelt Controls approved equivalent	P184C or Sunbelt Controls approved equivalent	*18 AWG / 4 Conductors; Stranded, unshielded, plenum rated.*	*I/O WIRING*	CLASS 2 WIRING ONLY	BLACK WHITE RED GREEN	*WHITE JACKET*
18/x UNSHLD 18/x UNSHLD	*W186C-2054B* *W188C-2046B* *W1810C-2078B* *W1812C-2148B* *or Sunbelt Controls approved equivalent*	002391 - 18/6; 002392 - 18/8; 002393 - 18/10; 002394 - 18/12 or Sunbelt Controls approved equivalent	P186C - 18/6; P188C - 18/8; P1810C - 18/10; P1812C - 18/12 or Sunbelt Controls approved equivalent	*18 AWG / 6 Conductors; Stranded, unshielded, plenum rated* *18 AWG / 8 Conductors* *18 AWG / 10 Conductors* *18 AWG / 12 Conductors*	*I/O WIRING*	CLASS 2 WIRING ONLY	BLACK, RED, WHITE, GREEN, BROWN, BLUE ORANGE, YELLOW VIOLET, GRAY, PINK, TAN	WHITE JACKET
18/2 SHLD (FIELD) 18/2 SHLD (FIELD)	*W181P-2040RIB* *or Sunbelt Controls approved equivalent*	002320 or Sunbelt Controls approved equivalent	P182CS-K1 or Sunbelt Controls approved equivalent	*18 AWG / 2 Conductors; Stranded, shielded, plenum rated & twisted pair.*	*I/O WIRING REQUIRING SHIELDING*	*INA* *INB* *CLASS 2 WIRING ONLY*	*WHITE* *BLACK*	*WHITE JACKET*
18/3 SHLD (FIELD) 18/3 SHLD (FIELD)	*W183C-2058RIB* *or Sunbelt Controls approved equivalent*	002330 or Sunbelt Controls approved equivalent	P183CS or Sunbelt Controls approved equivalent	*18 AWG / 3 Conductors; Stranded, shielded, plenum rated.*	*I/O WIRING REQUIRING SHIELDING*	*CLASS 2 WIRING ONLY*	WHITE BLACK RED	*WHITE JACKET*
18/4 SHLD (FIELD) 18/4 SHLD (FIELD)	*W184C-2059RIB* *or Sunbelt Controls approved equivalent*	0023430 or Sunbelt Controls approved equivalent	P184CS or Sunbelt Controls approved equivalent	*18 AWG / 4 Conductors; Stranded, shielded, plenum rated.*	*I/O WIRING REQUIRING SHIELDING*	*CLASS 2 WIRING ONLY*	WHITE BLACK RED GREEN	*WHITE JACKET*
18/x SHLD 18/X SHLD (FIELD)	*W186C-2054B* *W188C-2046B* *W1810C-2078B* *W1812C-2148B* *or Sunbelt Controls approved equivalent*	002351 - 18/6 002352 - 18/8 002353 - 18/10 002354 - 18/12 or Sunbelt Controls approved equivalent	P186CS - 18/6; P188CS - 18/8; P1810CS - 18/10; P1812CS - 18/12 or Sunbelt Controls approved equivalent	*18 AWG / 6 Conductors; Stranded, shielded, plenum rated* *18 AWG / 8 Conductors* *18 AWG / 10 Conductors* *18 AWG / 12 Conductors*	*I/O WIRING REQUIRING SHIELDING*	CLASS 2 WIRING ONLY	BLACK, RED, WHITE, GREEN, BROWN, BLUE ORANGE, YELLOW VIOLET, GRAY, PINK, TAN	WHITE JACKET
MTW 14AWG MTW 14ga	*WI14-01MTWBLK - Black* *WI14-01MTWWHT - White* *WI14-01MTWGRN - Green* *or Sunbelt Controls approved equivalent*	14MTWBLK - Black 14MTWWHT - White 14MTWGRN - Green or Sunbelt Controls approved equivalent	41103-BLK - Black 41103-WHT - White 41103-GRN - Green or Sunbelt Controls approved equivalent	*14 AWG MTW stranded wire.*	*CONTROL PANEL INTERIOR WIRE - 120VAC*	*120VAC Hot* *120VAC Neutral* *GROUND*	BLACK WHITE GREEN	*NO JACKET; COLORED SHEATH ONLY*
MTW 16AWG MTW 16ga	*WI16-01MTWRED - Red* *WI16-01MTWBLK - Black* *or Sunbelt Controls approved equivalent*	16MTWRED - Red 16MTWBLK - Black or Sunbelt Controls approved equivalent	41102-RED - Red; 41102-BLK - Black or Sunbelt Controls approved equivalent	*16 AWG MTW stranded wire.*	*CONTROL PANEL INTERIOR WIRE - 24VAC*	*24VAC H Power* *24VAC N Power* *24 VDC+*	RED BLACK RED	*NO JACKET; COLORED SHEATH ONLY*
MTW 18AWG PANEL I/O 18ga	*WI18-01MTWWHT - White* *WI18-01MTWBLK - Black* *or Sunbelt Controls approved equivalent*	18MTWWHT - White 18MTWBLK - Black or Sunbelt Controls approved equivalent	41101-WHT - White 41101-BLK - Black or Sunbelt Controls approved equivalent	*18 AWG MTW stranded wire.*	*CONTROL PANEL INTERIOR WIRE - I/O*	*Inputs/Outputs* *Inputs/Outputs Common*	WHITE BLACK	*NO JACKET; COLORED SHEATH ONLY*

Note: No cable substitutions without prior written approval from Sunbelt Controls

Abbreviations

AWG	*- American Wire Gauge*
CAT-5, 5e, 6, 6e	*- Ethernet Cable*
EIA-232	*- Communications Protocol*
EIA-485	*- Communications Protocol*
G or GND	*- Ground*
I/O	*- Input/Output*
INA	*- Input A*
INB	*- Input B*
LS5V	*- +5vdc Logistat*
NET-	*- ARCnet comm. -*
NET+	*- ARCnet comm. +*
RX-	*- Receive -*
RX+	*- Receive +*
ST / SC	*- Fiber Optic Connector*
TEMP	*- Temperature*
THHN	*- A thermoplastic-insulated, nylon-jacketed conductor signed for use in dry locations and an operating temperature of up to 90 degrees Celsius. Is dual-rated THWN for moist environments.*
TFFN	*- A thermoplastic-insulated, nylon-jacketed conductor signed for use in dry locations and an operating temperature of up to 90 degrees Celsius.*
TX-	*- Transmit -*
TX+	*- Transmit +*
VAC	*- Voltage Alternating Current*
VDC+	*- Voltage Direct Current, Positive side.*

Network Notes:

1. All communication cable terminations in and out of a temperature control panel, terminal equipment, or VAV box must be labeled with "from (equipment name)" and "to (equipment name)" locations.
2. All ARC156/CMnet or Unet communication, serial interface, control, and monitoring wiring must be terminated at the locations designated and must be free of splices.
3. Each ARC156/CMnet network supports a maximum of 99 modules excluding repeaters.
4. Each segment must be wired in a daisy chain fashion. Branching requires the use of a REP485 (repeater) and/or an AAR (ARCnet to ARCnet Router). No ARCnet segment shall exceed 32 modules.
5. Network ends must be terminated with a BT485 or TERM485 resistors.
6. Each network must have at least one (1) DIAG485 installed on the network to supply bias if the network is terminated with TERM485 resistors. If DIAG485 is installed on a network with BT485 at EOL, remove bias jumper.
7. When shielded cable is used, do not strip back sheath more than 1" in order to keep the twisted pair from separating. Do not ground shield to the panel or chassis ground. The shield should only be connected to the Optional Shield connection at the module.
8. Ungrounded shields must be cut back and taped to prevent contact with metal surfaces.
9. Electrical installation shall be in accordance with the project specifications, national, state, and local electrical codes along with Automated Logic's standards.
10. Cat-5e & Cat-6 cabling runs shall not exceed a maximum cable length of 325'. All Cat-5e & Cat-6 Ethernet wiring shall comply with IEEE 802.3 standards.
11. All temperature control panels will have a dedicated 120 VAC circuit unless specified otherwise. Conduit provided and installed by Div. 26.
12. ARCnet wiring shall not exceed 2000'.
13. Xnet wiring for ME Expander Modules shall not exceed 100'.

General Installation Notes:

1. Static pressure tubing diameter will be as follows:
   a. 100ft max: 3/16"
   b. 300ft max: 1/4"
   c. 900ft max: 3/8"
2. No more than 5 ZN controllers will be on a single TXP circuit.
3. Do not install communication wire in the same conduit as power wiring in excess of 30V.

(Deviations from the above Notes require approval from a Sunbelt Design Engineer)

DRAWING NO.: WIRE.1

DRAWING#	DRAWING NAME
SYM.1	Symbol Legend
WIRE.1	Wire Specification
TOC.1	Table of Contents
TOC.2	Table of Contents-2
1.1	Summary Bill of Materials
1.2	VAV Schedule (1 of 2)
1.3	VAV Schedule (2 of 2)
1.4	Network Riser Diagram (1 of 3)
1.5	Network Riser Diagram (2 of 3)
1.6	Network Riser Diagram (3 of 3)
2.1	Network Wiring Detail
2.2	Network Parts Tag Schedule
3.1	TCP-4 Panel Layout - CHW, CW & FC
3.2	TCP-4 Wiring Detail (1 of 2)
3.3	TCP-4 Wiring Detail (2 of 2)
3.4	CHW & CW Control Schematic (1 of 2)
3.5	CHW & CW Control Schematic (2 of 2)
3.6	Chiller Integration - BACnet
3.7	FC Control Schematic
3.8	TCP-4 Field Parts Tag Schedule
4.1	TCP-2 Panel Layout - AH-2
4.2	TCP-2 Wiring Detail (1 of 2)
4.3	TCP-2 Wiring Detail (2 of 2)
4.4	AH-2 Control Schematic (1 of 2)
4.5	AH-2 Control Schematic (2 of 2)
4.6	TCP-2 Field Parts Tag Schedule
5.1	TCP-3 Panel Layout - AH-3
5.2	TCP-3 Wiring Detail (1 of 2)
5.3	TCP-3 Wiring Detail (2 of 2)
5.4	AH-3 Control Schematic (1 of 2)
5.5	AH-3 Control Schematic (2 of 2)
5.6	TCP-3 Field Parts Tag Schedule
6.1	TCP-1 Panel Layout - AC-1
6.2	TCP-1 Wiring Detail (1 of 2)
6.3	TCP-1 Wiring Detail (2 of 2)
6.4	AC-1 Control Schematic (1 of 2)
6.5	AC-1 Control Schematic (2 of 2)
6.6	TCP-1 Field Parts Tag Schedule
7.1	TCP-5 Panel Layout - EF-1,2,3,4,5,8
7.2	TCP-5 Wiring Detail (1 of 2)
7.3	TCP-5 Wiring Detail (2 of 2)
7.4	EF-1,2,3 Control Schematic
7.5	EF-4,5,8 Control Schematic
7.6	TCP-5 Field Parts Tag Schedule
8.1	TCP-6 Panel Layout - Lab 235
8.2	TCP-6 Wiring Detail (1 of 2)
8.3	TCP-6 Wiring Detail (2 of 2)
8.4	Lab 235 Control Schematic
8.5	AccuValve Integration - BACnet
8.6	TCP-6 Field Parts Tag Schedule
9.1	TCP-7 Panel Layout - Lab 234
9.2	TCP-7 Wiring Detail
9.3	Lab 234 Control Schematic
9.4	AccuValve Integration - BACnet
9.5	TCP-7 Field Parts Tag Schedule
10.1	TCP-8/9 Panel Layout - Lab 237/128
10.2	TCP-8/9 Wiring Detail
10.3	Lab 237/128 Control Schematic
10.4	TCP-8/9 Field Parts Tag Schedule
11.1	TCP-10/11/12 Panel Layout - Lab 126/127/130

DRAWING#	DRAWING NAME
11.2	TCP-10/11/12 Wiring Detail
11.3	Lab 126/127/130 Control Schematic
11.4	TCP-10/11/12 Field Parts Tag Schedule
12.1	TCP-MON Panel Layout - Domestic CW & ATS
12.2	TCP-MON Wiring Detail
12.3	Domestic CW & ATS Control Schematic
12.4	TCP-MON Field Parts Tag Schedule
13.1	TCP-13 Panel Layout - Industrial & Domestic HW
13.2	TCP-13 Wiring Detail
13.3	Industrial & Domestic HW Control Schematic
13.4	TCP-13 Field Parts Tag Schedule
14.1	TCP-14 Panel Layout - ACI-1/2 & Power Meter
14.2	TCP-14 Wiring Detail
14.3	TCP-14 Field Parts Tag Schedule
15.1	TCP-15 Panel Layout - ACI-3/4
15.2	TCP-15 Wiring Detail
15.3	TCP-15 Field Parts Tag Schedule
16.1	ACS-1/2 Wiring Detail
16.2	ACS-1/2 Control Schematic
16.3	ACS-1/2 Field Parts Tag Schedule
17.1	RH VAV Wiring & Schematic
17.2	RH VAV w/ CO2 Wiring & Schematic
17.3	RH VAV 2.4 Wiring & Schematic
17.4	RH VAV 2.33 Wiring & Schematic
17.5	VAV Field Parts Tag Schedule
18.1	TXP-1 Wiring Detail
18.2	TXP-2 Wiring Detail
18.3	TXP-3 Wiring Detail
18.4	TXP-4 Wiring Detail
18.5	TXPs Parts Tag Schedule

DRAWING#	DRAWING NAME
DETAILS.1	
DETAILS.2	

Summary Bill of Materials

Bill of Material

Part Number	Product Description	Manufacturer	Panel Or Field	Quantity	
804155	120VAC Single Receptacle, DIN Mount	Phoenix Contact	P	16	
160-8	Stainless Steel Pitot Tube, 8" Insertion	Dwyer	F	1	
2301-100PD-5V-11-B	Diff. Press. Transmitter, Wet, 4-20mA, 0-100 psid,	Setra	F	2	
2671-005WD-11-A1-HD	Dry Diff Press, Panel Mount, LCD, 0-5"wc 0.5%, 4-20mA, 24VAC	Setra	P	1	
2671-010WD-11-A1-HD	Dry Diff Press, Panel Mount, LCD, 0-10"wc 0.5%, 4-20mA, 24VAC	Setra	P	4	
2671-R25WB-11-A1-HD	Dry Diff Press, Panel Mount, LCD, +/-0.25"wc 0.5%, 4-20mA, 24VAC	Setra	P	2	
2902994	120-240VAC to 24VDC Power Supply, 90W, 3.75A, DIN	Phoenix Contact	P	21	
A30N24MP	Hoffman Sub-panel, Solid, NEMA 1, 30x24	Hoffman	P	1	
A30P24	Hoffman Sub-panel, Solid, NEMA-3R, 30x24	Hoffman	P	1	
AFB24-SR	Dmpr. Act. 180 in-lbs, Spring Return, 2-10 V, 24 VAC,	Belimo	F	15	
AMB24-SR-T N4	Dmpr. Act. 160 in-lbs, Non-Spring Return, 2-10 V, 24 VAC, NEMA 4	Belimo	F	1	
BA/10K-2-I-4"-SS-BB2	Immersion 4" Insertion, Stainless Threads, BAPI Box 4 IP44	BAPI	F	2	
BA/WSK	OA Sensor Weather Shield, Wall Mount	BAPI	F	1	
By owner	WebCTRL Server	By owner		1	
DT-300	PIR/Ultrasonic Ceiling Occupancy Sensor, 24 VAC/VDC, Light Level, Isolated Relay	Watt Stopper	F	9	
EIBA5-100T/R	Five-port 10BASE-T/100BASE-TX switching hub, DIN-rail mount	Contemporary Controls	P	1	
Existing Valve	Existing Valve	Existing Valve	F	68	
FIO012u	I/O Expander, 12 UI	Automated Logic	P	4	
FSM-3BF06-1021-FA3-131	Flow Xmtr, Insertion, Electromag, 6", hot tap vlv,4-20mA	Onicon	F	1	Future Install
G5CE	BACnet Integrator, ARCnet and MS/TP, Gigabit Ethernet	Automated Logic	P	1	
H608	Current Switch, Split Core, Adj. Setpoint to 0.5A, Mini	Veris	F	2	
NFB24-S	Dmpr. Act. 90 in-lbs, Spring Return, On/Off, 24 VAC, 2 Aux Switch	Belimo	F	3	
NFB24-SR	Dmpr. Act. 90 in-lbs, Spring Return, 2-10 V, 24 VAC,	Belimo	F	1	
NMB24-SR-T N4	Dmpr. Act. 70 in-lbs, Non-Spring Return, 2-10 V, 24 VAC, NEMA 4	Belimo	F	4	
NSB-10K-2-A-24-BB2-A	Continuous Averaging, 24' Length in BB2 NEMA 4X	Automated Logic	F	6	
NSB-10K-2-D-8-BB2-A	Duct, 8" Insertion, BB2 NEMA 4X	Automated Logic	F	15	
NSB-10K-2-O-BB2-A	Outside Air in BAPI BOX 2, 1/2 Size NEMA 4X Box	Automated Logic	F	1	
NSB-10K-2-S-BB2-A	Clamp-On Strap with 10K-2 Thermistor and Box 2 Enclosure	Automated Logic	F	2	
NSB-ZPS-ACC07-A	Static Pressure Probe Assembly	Automated Logic	F	2	
OAM II	Outdoor Airflow Measuring System with Heater	Air Monitor Corporation	F	3	
OF1628	BACnet Building Controller, 16 UO, 28 UI	Automated Logic	P	3	
OF1628-NR	BACnet Building Controller (Non-Routing), 16 UO, 28 UI	Automated Logic	P	9	
OF342-E2	Advanced VAV Controller, Actuator, Rnet, 4UI, 2AO, 3DO	Automated Logic	F	57	
OF561-E2	Zone Controller, 6 BO, 6 IN, 1 UO, Local Integration, 2X Ethernet	Automated Logic	P	4	
OF683-E2	Zone Controller, 6 BO, 8 IN, 2 AO, 1 UO, Local Integration, 2X Ethernet	Automated Logic	P	1	
OFHI	BACnet Integrator, 1,500 BACnet Points, 1,000 Modbus Points	Automated Logic	P	1	
P51-100-20	Gage Pressure Trans, 0-100 psig, 4-20mA	Kele	F	1	
PLM-KIT	Plenum Kit for OptiFlex Advanced Application Controllers	Automated Logic	F	2	
QL-10	Circuit Breaker, 120/240VAC, Din rail mount, 10A	Kele	P	16	
RH1B-ULCDC24V	Plug-in Relay, SPDT, Blade, Indicator Light and check button, 24 VDC coil voltage	Idec	P	18	
RIB2401B	Encl. Relay, 20A, SPDT, 24VAC/DC or 120VAC Coils	Functional Devices	F	1	
SCE-20N1606LP	Saginaw Hinge Cover Enclosure, NEMA 1, 20x16x6	Saginaw	P	3	
SCE-20N16MP	Saginaw Sub-panel, Solid, NEMA 1, 20x16	Saginaw	P	3	
SCE-24N2406LP	Saginaw Hinge Cover Enclosure, NEMA 1, 24x24x6	Saginaw	P	7	
SCE-24N24MP	Saginaw Sub-panel, Solid, NEMA 1, 24x24	Saginaw	P	7	
SCE-30P24	Saginaw Sub-panel, Solid, NEMA-4/12/3R, 30x24	Saginaw	P	3	
SCE-36N3006LP	Saginaw Hinge Cover Enclosure, NEMA 1, 36x30x6	Saginaw	P	1	
SCE-36N30MP	Saginaw Sub-panel, Solid, NEMA 1, 36x30	Saginaw	P	1	
SCE-DLKLDB	1/4 Turn Keylock Door Latch, Black Finish	Saginaw	P	9	
SH1B-05	SH1B Relay Socket	Idec	P	18	
TR100VA001	Xfmr 96VA,120:24,Ckt Brkr, Class 2	Functional Devices	P	58	
UACC-Rack-Panel-Patch-Blank-24	24-port Patch Panel	Ubiquiti		2	
Uni-Sensor	OA Flow Probe, 3", 1/8" NPT, SS	Air Monitor Corporation	F	5	
WC	WebCTRL	Automated Logic	P	1	
ZS2-ALC	ZS2 Std Space Temp Sensor, Rnet	Automated Logic	F	3	
ZS2P-ALC	ZS2 Pro Space Temp Sensor w/LCD, Rnet, SP Adj, Ovrd	Automated Logic	F	43	
ZS2P-C-ALC	ZS2 Pro Space Temp Sensor w/LCD, CO2, Rnet, SP Adj, Ovrd	Automated Logic	F	22	

SUNBELT CONTROLS
4511 Willow Road
Suite 4
Pleasanton, CA 94588

PROJECT:
L-1201 Science Building BAS
2700 E Leland Rd.
Pittsburg, CA 94565

FILENAME: 01 - Summary BOM & Riser

REV	DESCRIPTION	DATE	BY
0	As-Built	10/11/2023	NS

DRAWING NAME: Summary Bill of Materials

CONTRACT NO: 80860787 | SE: | DE: NS | PR:

DRAWING NO.: 1.1

VAV Schedule (1 of 2)

AHU	Room # Old	Room # New	VAV Box Tag Number	Manufacturer	Max Clg CFM	Max Htg CFM	Min CFM	Occupancy Min CFM	Area Min CFM	Reheat Valve GPM	Valve DP (psi)	Calc. Cv	Valve Cv	Actual DP (psi)	Valve Type	Body Size	Control Type	Model Number	Space CO2
2	124	124	VAV 2.1	Greenheck	475	240	AUTO	140	140	0.7	4	0.350	0.8	0.77	2-way	1/2"	2-10 VDC	Existing	
2	124	124	VAV 2.2	Greenheck	1550	915	AUTO	125	125	1.0	4	0.500	0.8	1.56	2-way	1/2"	2-10 VDC	Existing	
2	133	139	VAV 2.3	Greenheck	1020	1020	AUTO	0	1020	1.0	4	0.500	0.8	1.56	2-way	1/2"	2-10 VDC	Existing	
2	132	133	VAV 2.4	Greenheck	2585	2585	AUTO	0	2585	1.0	4	0.500	0.8	1.56	2-way	1/2"	2-10 VDC	Existing	
2	142	132	VAV 2.5	Greenheck	1995	675	AUTO	675	155	0.4	4	0.200	0.8	0.25	2-way	1/2"	2-10 VDC	Existing	x
2	131	131	VAV 2.6	Greenheck	1910	575	AUTO	540	140	0.5	4	0.250	0.8	0.39	2-way	1/2"	2-10 VDC	Existing	x
2	130	129	VAV 2.7	Greenheck	1910	575	AUTO	540	140	0.5	4	0.250	0.8	0.39	2-way	1/2"	2-10 VDC	Existing	x
2	125	125	VAV 2.10	Greenheck	640	640	AUTO	0	640	0.8	4	0.400	0.8	1.00	2-way	1/2"	2-10 VDC	Existing	
2	144	142	VAV 2.13	Greenheck	230	115	AUTO	15	15	0.4	4	0.200	0.8	0.25	2-way	1/2"	2-10 VDC	Existing	
2	146	143	VAV 2.14	Greenheck	280	140	AUTO	0	15	0.4	4	0.200	0.8	0.25	2-way	1/2"	2-10 VDC	Existing	
2	147	144	VAV 2.15	Greenheck	345	175	AUTO	120	20	0.6	4	0.300	0.8	0.56	2-way	1/2"	2-10 VDC	Existing	x
2	126	147	VAV 2.16	Greenheck	165	85	AUTO	0	15	0.4	4	0.200	0.8	0.25	2-way	1/2"	2-10 VDC	Existing	
2	241	241	VAV 2.17	Greenheck	430	215	AUTO	70	70	0.8	4	0.400	0.8	1.00	2-way	1/2"	2-10 VDC	Existing	
2	234,244	234,232	VAV 2.18	Greenheck	420	210	AUTO	85	85	0.3	4	0.150	0.8	0.14	2-way	1/2"	2-10 VDC	Existing	
2	227	227	VAV 2.19	Greenheck	740	370	AUTO	125	125	1.0	4	0.500	0.8	1.56	2-way	1/2"	2-10 VDC	Existing	
2	237	242	VAV 2.20	Greenheck	125	65	AUTO	0	15	0.4	4	0.200	0.8	0.25	2-way	1/2"	2-10 VDC	Existing	
2	232-233	231-233	VAV 2.23	Greenheck	665	300	AUTO	75	70	1.0	4	0.500	0.8	1.56	2-way	1/2"	2-10 VDC	Existing	
2	231	229	VAV 2.24	Greenheck	2065	620	AUTO	480	145	0.8	4	0.400	0.8	1.00	2-way	1/2"	2-10 VDC	Existing	x
2	230	227	VAV 2.25	Greenheck	2220	665	AUTO	480	145	1.9	4	0.950	1.2	2.51	2-way	1/2"	2-10 VDC	Existing	x
2	229	225	VAV 2.26	Greenheck	1825	900	AUTO	900	240	2.1	4	1.050	1.2	3.06	2-way	1/2"	2-10 VDC	Existing	x
2	243	236	VAV 2.28	Greenheck	265	135	AUTO	15	30	0.2	4	0.100	0.8	0.06	2-way	1/2"	2-10 VDC	Existing	
2	245	230	VAV 2.29	Greenheck	1255	445	AUTO	240	170	1.0	4	0.500	0.8	1.56	2-way	1/2"	2-10 VDC	Existing	
2	246	228	VAV 2.30	Greenheck	880	440	AUTO	30	160	1.7	4	0.850	1.2	2.01	2-way	1/2"	2-10 VDC	Existing	
2	247	238	VAV 2.31	Greenheck	290	145	AUTO	0	10	0.3	4	0.150	0.8	0.14	2-way	1/2"	2-10 VDC	Existing	
2	248	240	VAV 2.32	Greenheck	195	100	AUTO	30	35	0.2	4	0.100	0.8	0.06	2-way	1/2"	2-10 VDC	Existing	
2	249	226	VAV 2.33	Greenheck	980	490	AUTO	360	175	1.4	4	0.700	0.8	3.06	2-way	1/2"	2-10 VDC	Existing	x

SUNBELT CONTROLS
4511 Willow Road
Suite 4
Pleasanton, CA 94588

PROJECT:
L-1201 Science Building BAS
2700 E Leland Rd.
Pittsburg, CA 94565

FILENAME: 01 - Summary BOM & Riser

REV	DESCRIPTION	DATE	BY
0	As-Built	10/11/2023	NS

DRAWING NAME: VAV Schedule (1 of 2)

CONTRACT NO: 80860787 | SE: | DE: NS | PR:

DRAWING NO.: 1.2

VAV Schedule (2 of 2)

AHU	Room # Old	Room # New	VAV Box Tag Number	Manufacturer	Max Clg CFM	Max Htg CFM	Min CFM	Occupancy Min CFM	Area Min CFM	Reheat Valve GPM	Valve DP (psi)	Calc. Cv	Valve Cv	Actual DP (psi)	Valve Type	Body Size	Control Type	Model Number	Space CO2
3	101	101	VAV 3.1	Greenheck	1515	745	AUTO	285	285	2.1	4	1.050	1.2	3.06	2-way	1/2"	2-10 VDC	Existing	
3	102	103	VAV 3.2	Greenheck	1590	525	AUTO	525	160	1.0	4	0.500	0.8	1.56	2-way	1/2"	2-10 VDC	Existing	x
3	102	104	VAV 3.3	Greenheck	1590	525	AUTO	525	160	1.0	4	0.500	0.8	1.56	2-way	1/2"	2-10 VDC	Existing	x
3	103	105	VAV 3.4	Greenheck	190	95	AUTO	90	20	0.4	4	0.200	0.8	0.25	2-way	1/2"	2-10 VDC	Existing	x
3	104	104	VAV 3.5	Greenheck	490	245	AUTO	120	45	0.9	4	0.450	0.8	1.27	2-way	1/2"	2-10 VDC	Existing	x
3	152	102	VAV 3.6	Greenheck	740	720	AUTO	720	130	1.1	4	0.550	0.8	1.89	2-way	1/2"	2-10 VDC	Existing	x
3	149	110	VAV 3.7	Greenheck	180	90	AUTO	15	30	0.2	4	0.100	0.8	0.06	2-way	1/2"	2-10 VDC	Existing	
3	109-110		VAV 3.8	Greenheck	785	435	AUTO	0	160	0.9	4	0.450	0.8	1.27	2-way	1/2"	2-10 VDC	Existing	
3	111	124	VAV 3.9	Greenheck	180	90	AUTO	60	30	0.2	4	0.100	0.8	0.06	2-way	1/2"	2-10 VDC	Existing	
3	112	111	VAV 3.10	Greenheck	260	130	AUTO	15	40	0.2	4	0.100	0.8	0.06	2-way	1/2"	2-10 VDC	Existing	
3	113-115	113-115	VAV 3.11	Greenheck	425	215	AUTO	45	45	0.8	4	0.400	0.8	1.00	2-way	1/2"	2-10 VDC	Existing	
3	116-118	116-118	VAV 3.12	Greenheck	420	210	AUTO	45	45	0.7	4	0.350	0.8	0.77	2-way	1/2"	2-10 VDC	Existing	
3	119-121	119-121	VAV 3.13	Greenheck	420	210	AUTO	45	45	0.7	4	0.350	0.8	0.77	2-way	1/2"	2-10 VDC	Existing	
3	122	122	VAV 3.14	Greenheck	475	240	AUTO	15	45	0.6	4	0.300	0.8	0.56	2-way	1/2"	2-10 VDC	Existing	
3	201	201	VAV 3.15	Greenheck	1000	445	AUTO	170	170	1.2	4	0.600	0.8	2.25	2-way	1/2"	2-10 VDC	Existing	
3	203	202	VAV 3.16	Greenheck	1925	600	AUTO	600	175	1.5	4	0.750	0.8	3.52	2-way	1/2"	2-10 VDC	Existing	x
3	203	202	VAV 3.17	Greenheck	590	295	AUTO	240	80	0.9	4	0.450	0.8	1.27	2-way	1/2"	2-10 VDC	Existing	x
3	204		VAV 3.18	Greenheck	150	75	AUTO	60	15	0.2	4	0.100	0.8	0.06	2-way	1/2"	2-10 VDC	Existing	x
3	205		VAV 3.19	Greenheck	160	90	AUTO	90	20	0.3	4	0.150	0.8	0.14	2-way	1/2"	2-10 VDC	Existing	x
3	206		VAV 3.20	Greenheck	95	75	AUTO	75	20	0.3	4	0.150	0.8	0.14	2-way	1/2"	2-10 VDC	Existing	x
3	208	206	VAV 3.21	Greenheck	120	90	AUTO	90	30	0.3	4	0.150	0.8	0.14	2-way	1/2"	2-10 VDC	Existing	x
3	210	208	VAV 3.22	Greenheck	180	90	AUTO	90	35	0.4	4	0.200	0.8	0.25	2-way	1/2"	2-10 VDC	Existing	x
3	207	207	VAV 3.23	Greenheck	615	305	AUTO	110	110	0.8	4	0.400	0.8	1.00	2-way	1/2"	2-10 VDC	Existing	
3	211-212		VAV 3.24	Greenheck	850	480	AUTO	0	165	1.1	4	0.550	0.8	1.89	2-way	1/2"	2-10 VDC	Existing	
3	226	223	VAV 3.25	Greenheck	200	100	AUTO	60	35	0.1	4	0.050	0.8	0.02	2-way	1/2"	2-10 VDC	Existing	
3	225	222	VAV 3.26	Greenheck	235	120	AUTO	120	40	0.4	4	0.200	0.8	0.25	2-way	1/2"	2-10 VDC	Existing	x
3	215	211	VAV 3.27	Greenheck	175	90	AUTO	15	15	0.4	4	0.200	0.8	0.25	2-way	1/2"	2-10 VDC	Existing	
3	216-217	213-214	VAV 3.28	Greenheck	490	245	AUTO	30	25	0.5	4	0.250	0.8	0.39	2-way	1/2"	2-10 VDC	Existing	
3	218-220	215-217	VAV 3.29	Greenheck	735	300	AUTO	45	45	0.8	4	0.400	0.8	1.00	2-way	1/2"	2-10 VDC	Existing	
3	221-223	218-220	VAV 3.30	Greenheck	735	300	AUTO	45	45	0.8	4	0.400	0.8	1.00	2-way	1/2"	2-10 VDC	Existing	
3	224	221	VAV 3.31	Greenheck	735	300	AUTO	45	45	0.8	4	0.400	0.8	1.00	2-way	1/2"	2-10 VDC	Existing	

SUNBELT CONTROLS
4511 Willow Road
Suite 4
Pleasanton, CA 94588

PROJECT:
L-1201 Science Building BAS
2700 E Leland Rd.
Pittsburg, CA 94565

FILENAME: 01 - Summary BOM & Riser

REV	DESCRIPTION	DATE	BY
0	As-Built	10/11/2023	NS

DRAWING NAME: VAV Schedule (2 of 2)

CONTRACT NO: 80860787 | SE: | DE: NS | PR:

DRAWING NO.: 1.3

Network Riser Diagram (1 of 3)

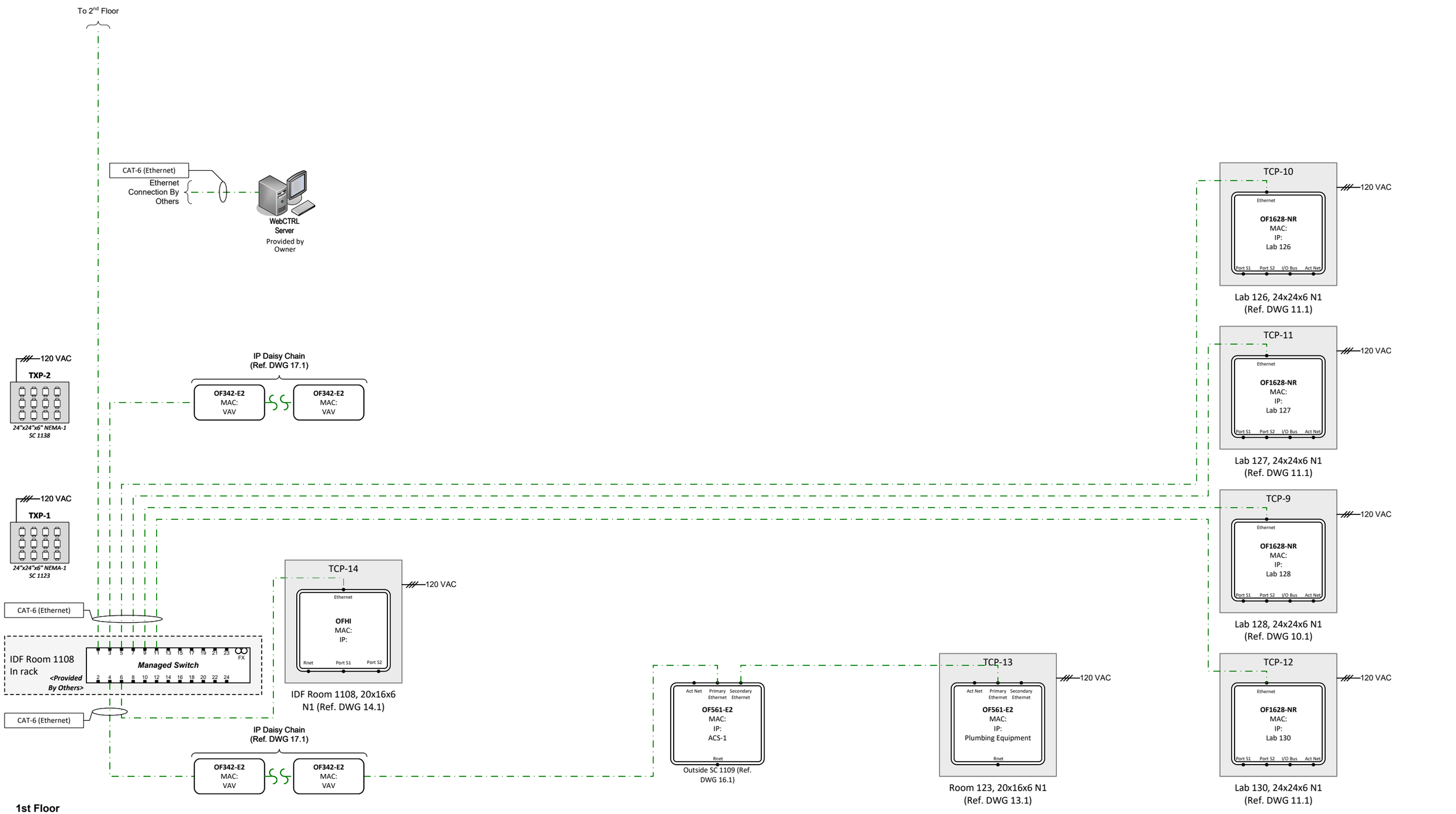

SUNBELT CONTROLS
4511 Willow Road
Suite 4
Pleasanton, CA 94588

PROJECT:
L-1201 Science Building BAS
2700 E Leland Rd.
Pittsburg, CA 94565

FILENAME: 01 - Summary BOM & Riser

REV	DESCRIPTION	DATE	BY
0	As-Built	10/11/2023	NS
		0	
		0	
		0	
		0	

DRAWING NAME:
Network Riser Diagram (1 of 3)

CONTRACT NO: 80860787 | **SE:** | **DE: NS** | **PR:**

DRAWING NO.: 1.4

Network Riser Diagram (2 of 3)

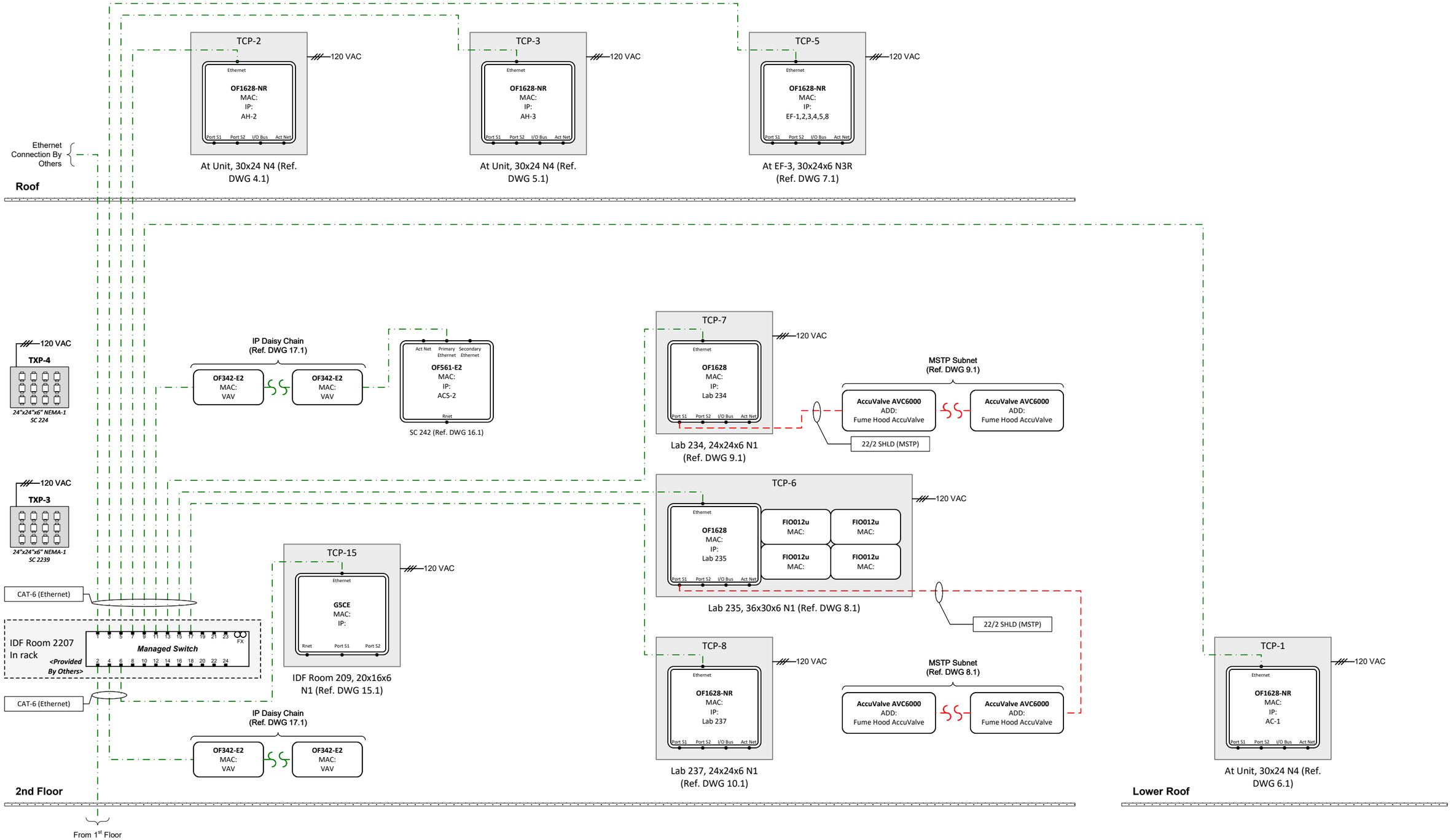

SUNBELT CONTROLS
4511 Willow Road
Suite 4
Pleasanton, CA 94588

PROJECT:
L-1201 Science Building BAS
2700 E Leland Rd.
Pittsburg, CA 94565

FILENAME: 01 - Summary BOM & Riser

REV	DESCRIPTION	DATE	BY
0	As-Built	10/11/2023	NS
		0	
		0	
		0	
		0	

DRAWING NAME: Network Riser Diagram (2 of 3)

CONTRACT NO: 80860787 | SE: | DE: NS | PR:

DRAWING NO.: 1.5

Network Riser Diagram (3 of 3)

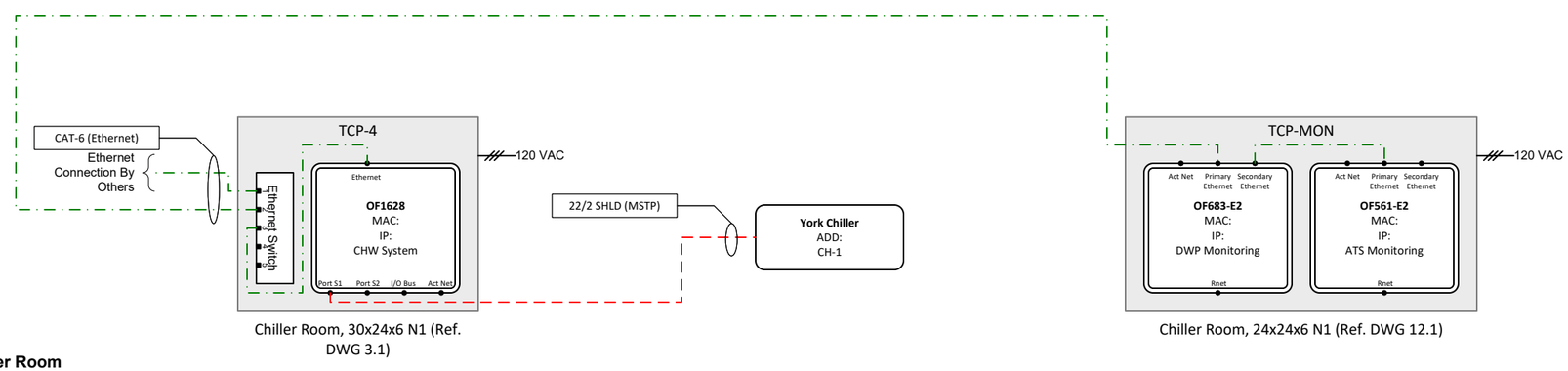

Chiller Room, 30x24x6 N1 (Ref. DWG 3.1)

Chiller Room, 24x24x6 N1 (Ref. DWG 12.1)

Chiller Room

SUNBELT CONTROLS
4511 Willow Road
Suite 4
Pleasanton, CA 94588

PROJECT:
L-1201 Science Building BAS
2700 E Leland Rd.
Pittsburg, CA 94565

FILENAME: 01 - Summary BOM & Riser

REV	DESCRIPTION	DATE	BY
		0	
		0	
		0	
		0	
0	As-Built	10/11/2023	NS

DRAWING NAME:
Network Riser Diagram (3 of 3)

CONTRACT NO: 80860787 | **SE:** | **DE: NS** | **PR:**

DRAWING NO.: 1.6

Network Wiring Detail

<Existing>

G-1 Server provided by owner

ALC-1 WebCTRL Software License

SERVER REQUIREMENTS (SERVER SOLD SEPARATELY)		
Minimum Server Specs:	Quad core processor, 4 GB RAM, 100 Mbps or higher LAN communications Supports PCs running Windows and Apple (Mac) PCs running Mac OS X and Linux	
Operating System:	The following operating systems in 64-bit versions	
	Windows Server 2019 Windows Server 2016 Windows Server 2012 R2 Red Hat Linux 7.4	Windows 10 Professional and Enterprise Windows 8 Professional and Enterprise Ubuntu® 18.04 and 20.04
Database:	Apache Derby (default database engine-included with purchase) The WebCTRL® v8.0 system supports the following databases (sold separately)	
	Oracle 12c MySQL 5.7.2MySQL 5.7.2 and 8.0	SQL Server Express 2019, 2017, 2016 SQL Server 2019, 2017, 2016 PostgreSQL 9.4 through 12
Security:	BACnet Secure Connect (BACnet/SC) secure, encrypted datalink layer	
	Supports TLS (Transport Layer Security) v1.3 with 256 bit encryption between client and WebCTRL server	
Supports:	Unlimited simultaneous users Hierarchical server configuration for very large systems Communication to field controllers via BACnet (TCP/IP)	
Languages:	International English, Brazilian Portuguese, French, French Canadian, German, Italian, Japanese, Korean, Russian, Simplified Chinese, Swedish, Thai, Traditional Chinese, Vietnamese, Dutch, Norwegian, Finnish	
BACnet:	BACnet Protocol Revision 19 Compliant BACnet Advanced Operator Workstation (B-AWS)	

PRODUCT VERSIONS

SKU	Description	Application
WC-S	WebCTRL Standard*	Simple, small commercial facilities
WC-A	WebCTRL Advantage	Small to medium commercial facilities
WC-P	WebCTRL Premium	Large facilities to multi-building campuses
WC-LS	WebCTRL for Life Sciences	Facilities requiring 21 CFR part 11 certification

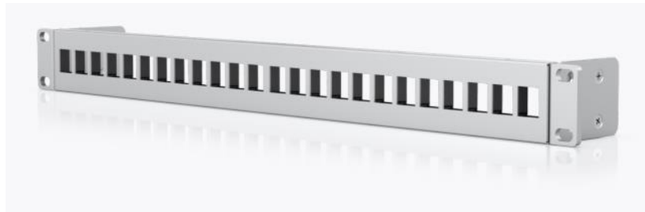

Typical of 2

G-2

Patch panel to be mounted in customer rack in IDF room. Customer to provide Ethernet switches in racks.

SUNBELT CONTROLS
4511 Willow Road
Suite 4
Pleasanton, CA 94588

PROJECT:
L-1201 Science Building BAS
2700 E Leland Rd.
Pittsburg, CA 94565

FILENAME: 02 - Network Equipment

REV	DESCRIPTION	DATE	BY
0	As-Built	10/11/2023	NS
		0	
		0	
		0	
		0	

DRAWING NAME: Network Wiring Detail

CONTRACT NO: 80860787 | SE: | DE: NS | PR:

DRAWING NO.: 2.1

Network Parts Tag Schedule

Bill of Materials w/ Tags

Tag	Part Number	Product Description	Manufacturer	Panel Or Field	Quantity
ALC-1	WC	WebCTRL	Automated Logic	P	1
G-1	By owner	WebCTRL Server	By owner		1
G-2	UACC-Rack-Panel-Patch-Blank-24	24-port Patch Panel	Ubiquiti		2

SUNBELT CONTROLS
4511 Willow Road
Suite 4
Pleasanton, CA 94588

PROJECT:
L-1201 Science Building BAS
2700 E Leland Rd.
Pittsburg, CA 94565

FILENAME: 02 - Network Equipment

REV	DESCRIPTION	DATE	BY
		0	
		0	
		0	
		0	
0	As-Built	10/11/2023	NS

DRAWING NAME:
Network Parts Tag Schedule

CONTRACT NO: 80860787 | SE: | DE: NS | PR:

DRAWING NO.: 2.2

TCP-4 Panel Layout - CHW, CW & FC

Panel Bill of Materials w/ Tags

Tag	Part Number	Product Description	Manufacturer	Panel Or Field	Quantity
ALC-1	OF1628	BACnet Building Controller, 16 UO, 28 UI	Automated Logic	P	1
CR-1	RH1B-ULCDC24V	Plug-in Relay, SPDT, Blade, Indicator Light and check button, 24 VDC coil voltage	Idec	P	1
CR-2	RH1B-ULCDC24V	Plug-in Relay, SPDT, Blade, Indicator Light and check button, 24 VDC coil voltage	Idec	P	1
CR-3	RH1B-ULCDC24V	Plug-in Relay, SPDT, Blade, Indicator Light and check button, 24 VDC coil voltage	Idec	P	1
CR-4	RH1B-ULCDC24V	Plug-in Relay, SPDT, Blade, Indicator Light and check button, 24 VDC coil voltage	Idec	P	1
ES-1	2902994	120-240VAC to 24VDC Power Supply, 90W, 3.75A, DIN	Phoenix Contact	P	1
ES-2	2902994	120-240VAC to 24VDC Power Supply, 90W, 3.75A, DIN	Phoenix Contact	P	1
G-1	SH1B-05	SH1B Relay Socket	Idec	P	1
G-2	SH1B-05	SH1B Relay Socket	Idec	P	1
G-3	SH1B-05	SH1B Relay Socket	Idec	P	1
G-4	SH1B-05	SH1B Relay Socket	Idec	P	1
ISE-1	QL-10	Circuit Breaker, 120/240VAC, Din rail mount, 10A	Kele	P	1
NY-1	EIBA5-100T/R	Five-port 10BASE-T/100BASE-TX switching hub, DIN-rail mount	Contemporary Controls	P	1
PA-1	804155	120VAC Single Receptacle, DIN Mount	Phoenix Contact	P	1
SUB-1	A30N24MP	Hoffman Sub-panel, Solid, NEMA 1, 30x24	Hoffman	P	1

TCP-4

(30x24x6 NEMA-1)

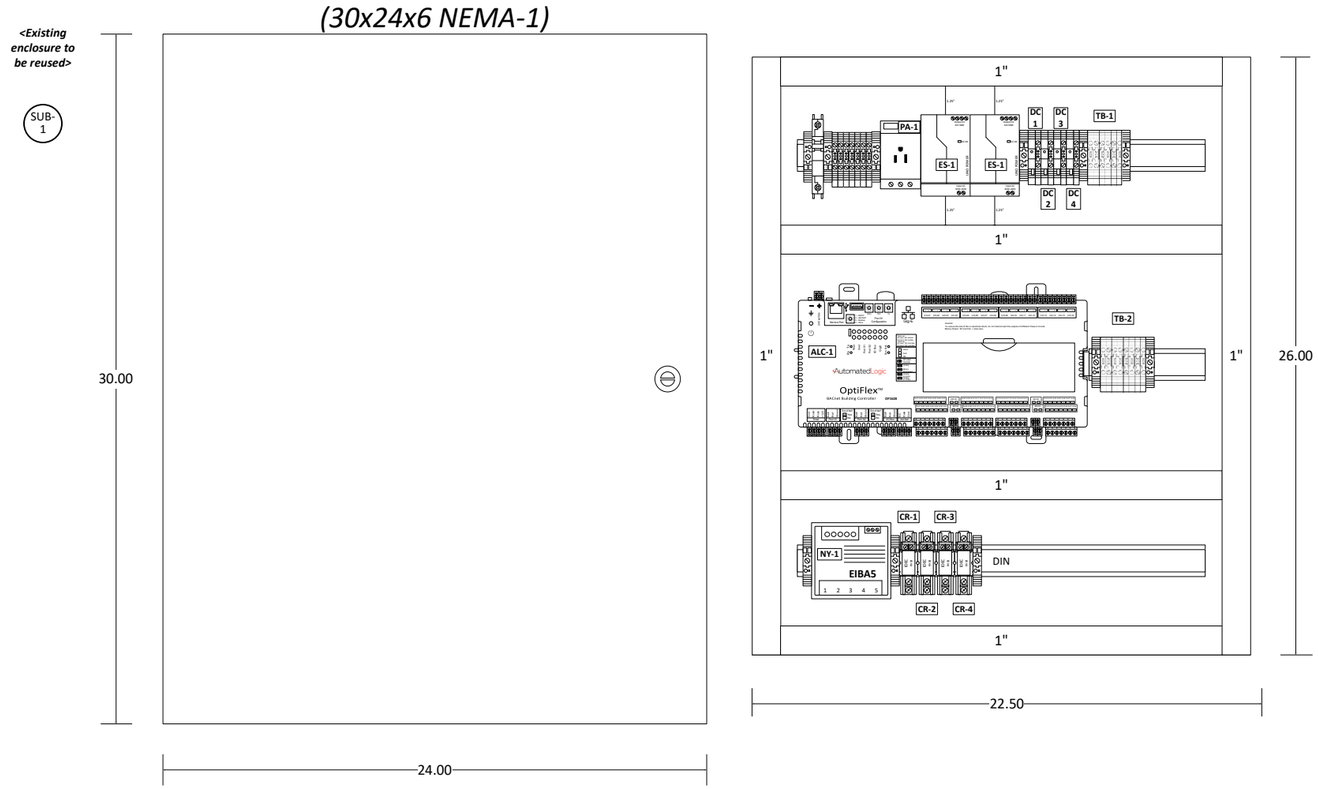

Panel Location: Chiller Room

SUNBELT CONTROLS
4511 Willow Road
Suite 4
Pleasanton, CA 94588

PROJECT:
L-1201 Science Building BAS
2700 E Leland Rd.
Pittsburg, CA 94565

FILENAME: 03 - TCP-4 - CHW System

REV	DESCRIPTION	DATE	BY
		0	
		0	
		0	
		0	
0	As-Built	10/11/2023	NS

DRAWING NAME: TCP-4 Panel Layout - CHW, CW & FC

CONTRACT NO: 80860787 | SE: | DE: NS | PR:

DRAWING NO.: 3.1

TCP-4 Wiring Detail (1 of 2)

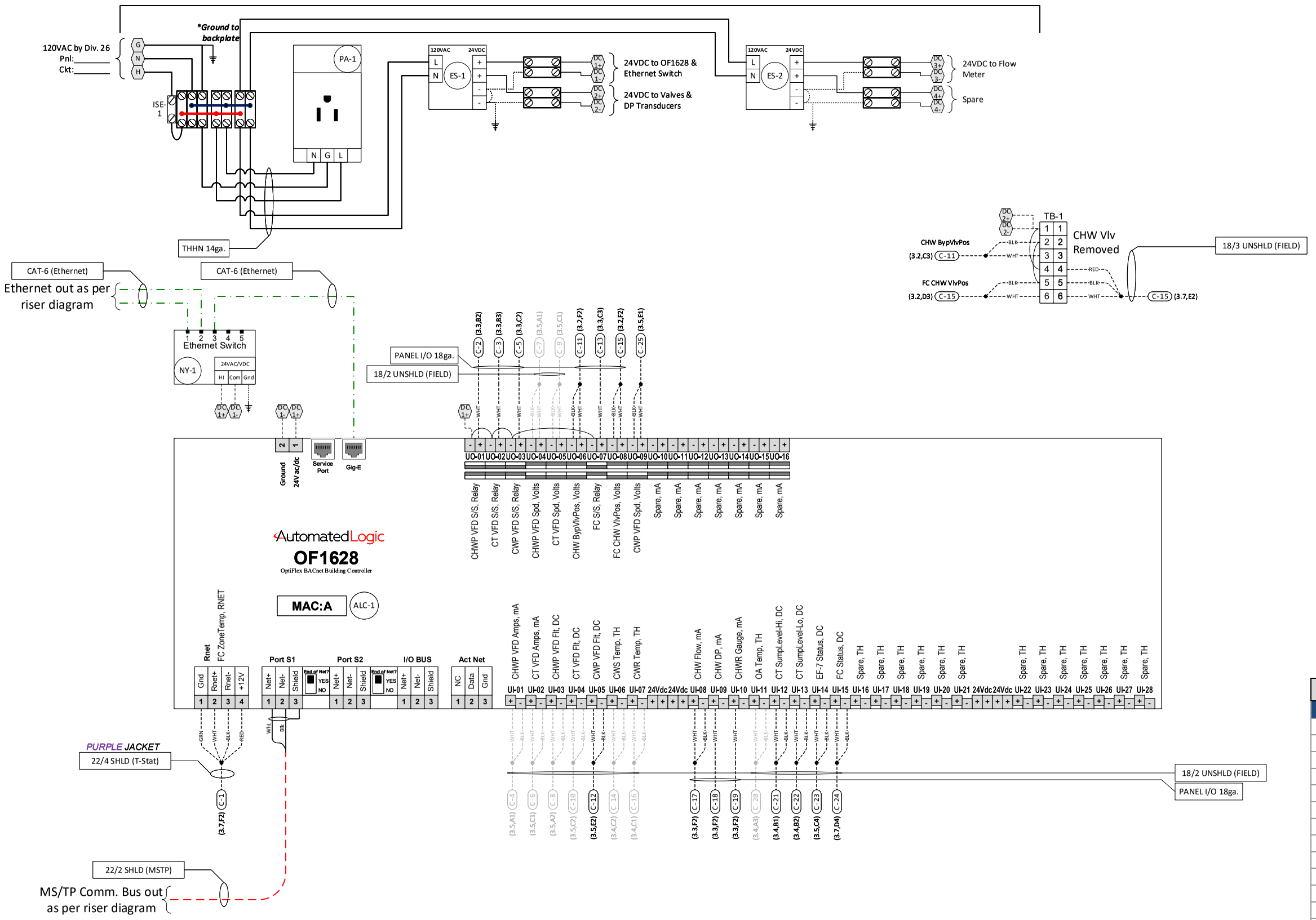

Panel continued on next page

Power Loop Schedule - VDC

Power Supply	Tag	Part Number	Watts
DC-1	ALC-1	OF1628	50
DC-1	CR-1	RH1B-ULCDC24V	0.8
DC-1	CR-2	RH1B-ULCDC24V	0.8
DC-1	CR-3	RH1B-ULCDC24V	0.8
DC-1	CR-4	RH1B-ULCDC24V	0.8
DC-1	NY-1	EIBA5-100T/R	5
DC-1	PDT-1	2301-100PD-5V-11-B	0.5
DC-1	PT-1	P51-100-20	0.5
DC-1	V-1	Existing Valve	1.5
		Subtotal	60.7
DC-2	CR-5	RIB2401B	0.8
DC-2	FT-1	FSM-3BF06-1021-FA3-131	50
		Subtotal	50.8

SUNBELT CONTROLS
4511 Willow Road
Suite 4
Pleasanton, CA 94588

PROJECT:
L-1201 Science Building BAS
2700 E Leland Rd.
Pittsburg, CA 94565

FILENAME: 03 - TCP-4 - CHW System

REV	DESCRIPTION	DATE	BY
0	As-Built	10/11/2023	NS

DRAWING NAME: TCP-4 Wiring Detail (1 of 2)
CONTRACT NO: 80860787 | SE: | DE: NS | PR:
DRAWING NO.: 3.2

TCP-4 Wiring Detail (2 of 2)

Panel continued from previous page

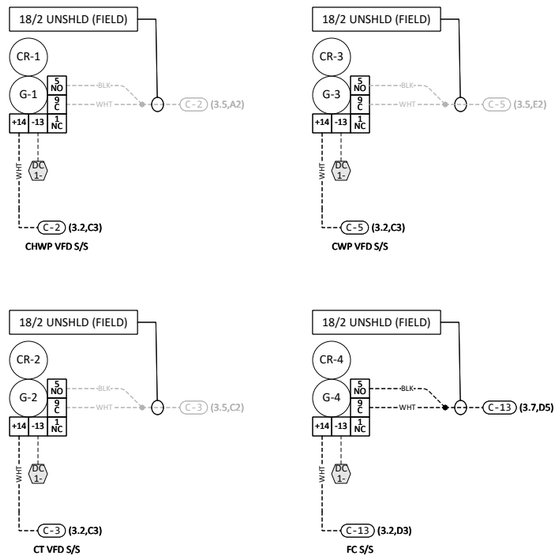

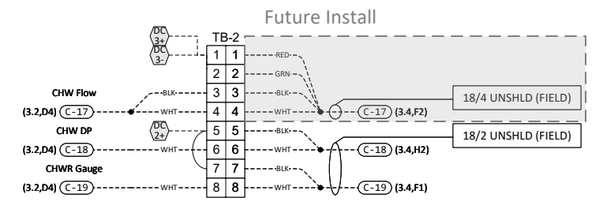

SUNBELT CONTROLS
4511 Willow Road
Suite 4
Pleasanton, CA 94588

PROJECT:
L-1201 Science Building BAS
2700 E Leland Rd.
Pittsburg, CA 94565

FILENAME: 03 - TCP-4 - CHW System

REV	DESCRIPTION	DATE	BY
		0	
		0	
		0	
		0	
0	As-Built	10/11/2023	NS

DRAWING NAME: TCP-4 Wiring Detail (2 of 2)

CONTRACT NO: 80860787 | SE: | DE: NS | PR:

DRAWING NO.: 3.3

CHW & CW Control Schematic (1 of 2)

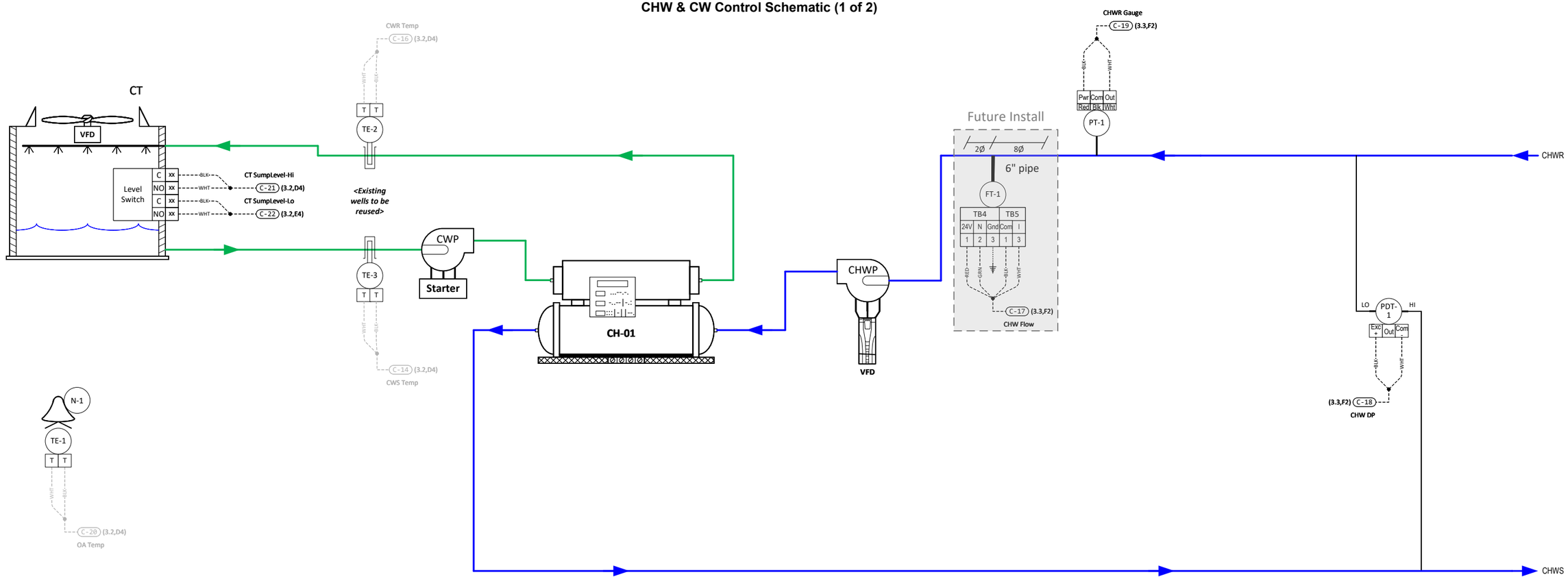

SUNBELT CONTROLS
4511 Willow Road
Suite 4
Pleasanton, CA 94588

PROJECT:
L-1201 Science Building BAS
2700 E Leland Rd.
Pittsburg, CA 94565

FILENAME: 03 - TCP-4 - CHW System

REV	DESCRIPTION	DATE	BY
0	As-Built	10/11/2023	NS
		0	
		0	
		0	
		0	

DRAWING NAME:
CHW & CW Control Schematic (1 of 2)

CONTRACT NO: 80860787 | SE: | DE: NS | PR:

DRAWING NO.: 3.4

CHW & CW Control Schematic (2 of 2)

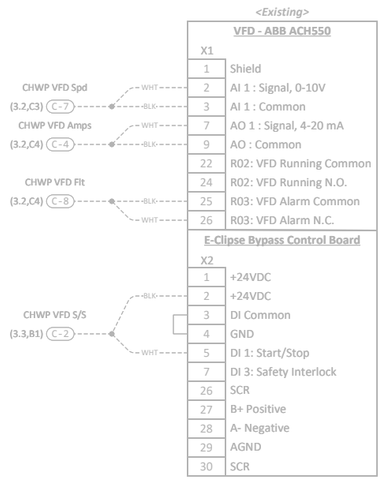

1. CHWP VFD Wiring Schematic

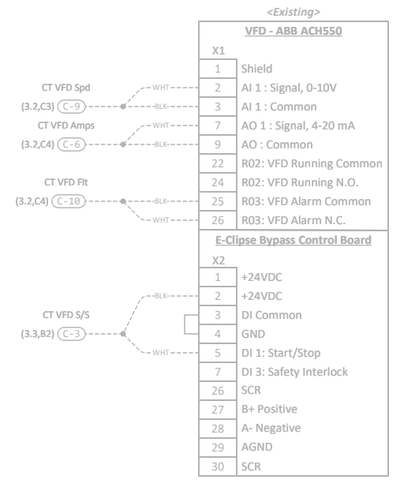

2. CT VFD Wiring Schematic

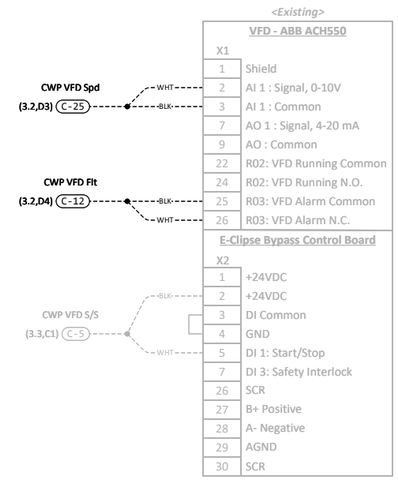

3. CWP Starter Wiring Schematic

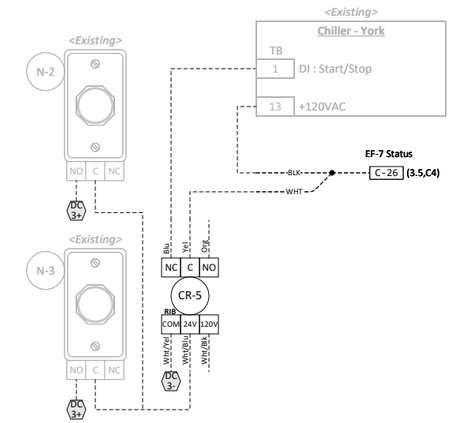

7. CH Wiring Schematic

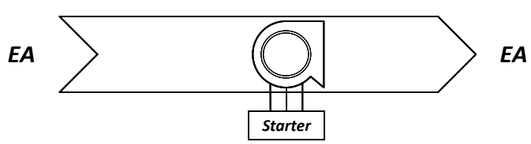

4. EF-7 Control Schematic

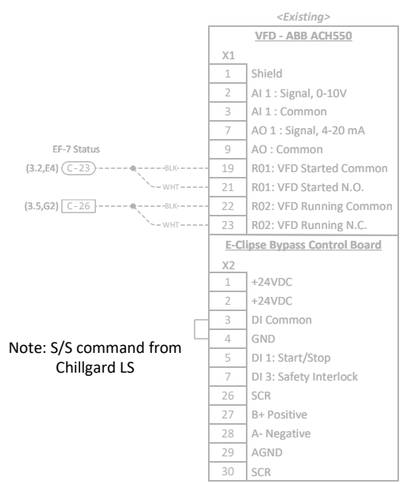

Note: S/S command from Chillgard LS

5. EF-7 Starter Wiring Schematic

Future Install

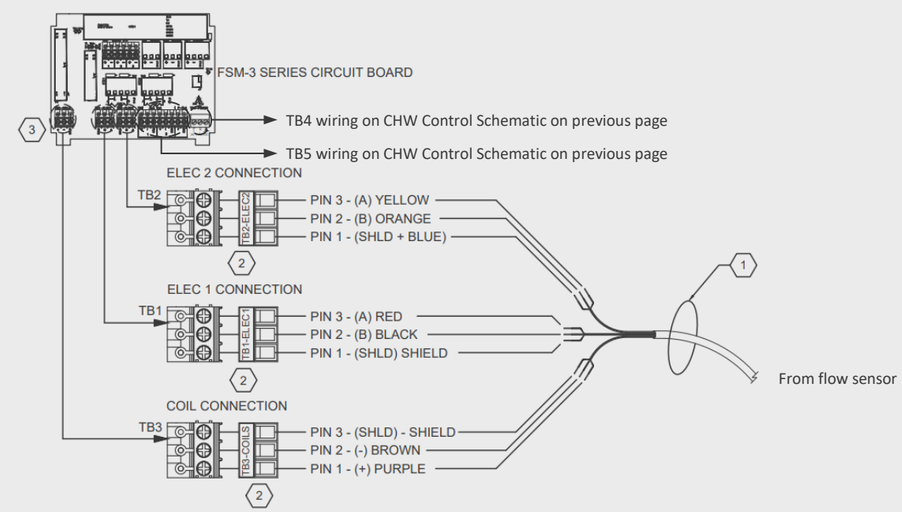

1. Identify the flow sensor coil and electrode wires based on their wire lead colors
2. Terminate the wires in their pre-labeled terminal blocks
3.Match the terminal block labels to the silk screen text on the circuit board when re-populating the terminal blocks

6. FSM-3 Flow Meter Wiring Schematic

SUNBELT CONTROLS
4511 Willow Road
Suite 4
Pleasanton, CA 94588

PROJECT: L-1201 Science Building BAS, 2700 E Leland Rd., Pittsburg, CA 94565

FILENAME: 03 - TCP-4 - CHW System

REV	DESCRIPTION	DATE	BY
		0	
		0	
		0	
		0	
0	As-Built	10/11/2023	NS

DRAWING NAME: CHW & CW Control Schematic (2 of 2)

CONTRACT NO: 80860787 | SE: | DE: NS | PR:

DRAWING NO.: 3.5

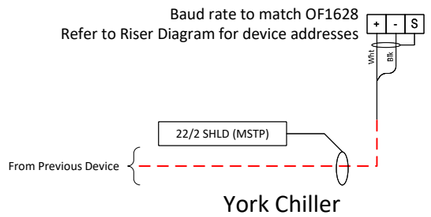

Chiller Integration - BACnet

Name	Value	Type	Offset / Polarity	Exp:Num	I/O Type
Condenser Pressure	0.0 psig	BAV			
Condenser Refrigerant Temperature	-14.79 °F	BAV			
Cycle Fault Code	0.0	BAV			
Entering Chilled Liquid Temp	0.0 °F	BAV			
Entering Condensor Liquid Temp	0.0 °F	BAV			
Evaporator Pressure	0.0 psig	BAV			
Evaporator Refrigerant Temperature	0.0 °F	BAV			
Input % FLA	0.0 %	BAV			
Input Current Limit	0.0 %	BAV			
Input Current Limit Active	0.0 %	BAV			
Internal Fault Code	-1.0	BAV			
Leaving Chilled Liquid Setpoint Actual	0.0 °F	BAV			
Leaving Chilled Liquid Temp	0.0 °F	BAV			
Leaving Chilled Liquid Temp Setpt	0.0 °F	BAV			
Leaving Condenser Liquid Temp	0.0 °F	BAV			
Local Capacity Limit	100.0 %	BAV			
Local CHWS Setpt	42.0 °F	BAV			
Modified Run Code	-1.0	BAV			
Motor Current % FLA	0.0 %	BAV			
Operational Code	0.0	BAV			
Safety Fault Code	-1.0	BAV			
Start Inhibit Code	-1.0	BAV			
VSD Input KWH	0.0 kWh	BAV			
VSD Input Power	0.0 kW	BAV			
VSD Output Voltage	0.0 V	BAV			
Warning Code	-1.0	BAV			
80860787	80860787	BBV			
Capacity Limit Select	Local	BBV			
Chilled Liquid Flow Switch	No Flow	BBV			
Chiller Fault Alarm	Okay	BBV			
Chiller Status	Off	BBV			
CHWS Setpoint Select	Remote	BBV			
Condenser Liquid Flow Switch	No Flow	BBV			
Inhibit Alarm PES?	No	BBV			
Local Start/Stop	Stop	BBV			
Maint Mode	Off	BBV			
Motor Run	Stopped	BBV			
Run Permissive	Off	BBV			
Start/Stop Select	Remote	BBV			
Stop Start Command	Stop	BBV			
VSD Cooling Sys Status	Off	BBV			
Cycle Fault Code 1	No Cycling Faults	BMSV			
Cycle Fault Code 2	Motor Controller - L	BMSV			
Cycle Fault Code 3	VSD - High Phase B I	BMSV			
Cycle Fault Code 4	-	BMSV			
Cycle Fault Code 5	-	BMSV			
Cycle Fault Code 6	-	BMSV			
Cycle Fault Code 7	-	BMSV			
Cycle Fault Code 8	-	BMSV			
Cycle Fault Code 9	-	BMSV			
Cycle Fault Code 10	-	BMSV			
Cycle Fault Code 11	-	BMSV			
Cycle Fault Code 12	-	BMSV			
Cycle Fault Code 13	-	BMSV			
Cycle Fault Code 14	-	BMSV			
Internal Fault Code 1	No Intertal Faults	BMSV			
Modified Run Code 1	No Modified Run Cond	BMSV			
Operational Code 1	Unit Stopped - Ready to Start	BMSV			
Operational Code 2	Unit Running - Soft	BMSV			
Safety Fault Code 1	No Safety Faults	BMSV			
Safety Fault Code 2	-	BMSV			
Safety Fault Code 3	-	BMSV			
Safety Fault Code 4	-	BMSV			
Safety Fault Code 5	-	BMSV			
Safety Fault Code 6	-	BMSV			
Safety Fault Code 7	-	BMSV			
Safety Fault Code 8	-	BMSV			
Safety Fault Code 9	-	BMSV			
Safety Fault Code 10	-	BMSV			
Safety Fault Code 11	-	BMSV			
Safety Fault Code 12	-	BMSV			

Name	Value	Type	Offset / Polarity	Exp:Num	I/O Type
Safety Fault Code 13	-	BMSV			
Safety Fault Code 14	-	BMSV			
Safety Fault Code 15	-	BMSV			
Safety Fault Code 16	-	BMSV			
Safety Fault Code 17	-	BMSV			
Safety Fault Code 18	-	BMSV			
Safety Fault Code 19	-	BMSV			
Safety Fault Code 20	-	BMSV			
Start Inhibit Code 1	No Inhibit Faults	BMSV			
Start Inhibit Code 2	-	BMSV			
Warning Code 1	No Warning Present	BMSV			
Warning Code 2	-	BMSV			
Warning Code 3	-	BMSV			
Warning Code 4	-	BMSV			
Warning Code 5	-	BMSV			
Warning Code 6	-	BMSV			
Warning Code 7	-	BMSV			
CHW_FOULING	Off	BALM			
COMM_LOSS	No Communications	BALM			
CW_FOULING	Off	BALM			
CYCLE_FAULT	Normal	BALM			
INTERNAL_FAULT	Off	BALM			
Maintenance Mode	Off	BALM			
POINT_LOCKED	Normal	BALM			
READ_ERROR	Read Error	BALM			
SAFETY_FAULT	Normal	BALM			
START_INHIBIT	Off	BALM			
WARNING	Off	BALM			

SUNBELT CONTROLS
4511 Willow Road
Suite 4
Pleasanton, CA 94588

PROJECT:
L-1201 Science Building BAS
2700 E Leland Rd.
Pittsburg, CA 94565

FILENAME: 03 - TCP-4 - CHW System

REV	DESCRIPTION	DATE	BY
		0	
		0	
		0	
		0	
0	As-Built	10/11/2023	NS

DRAWING NAME:
Chiller Integration - BACnet

CONTRACT NO: 80860787 | SE: | DE: NS | PR:

DRAWING NO.: 3.6

FC Control Schematic

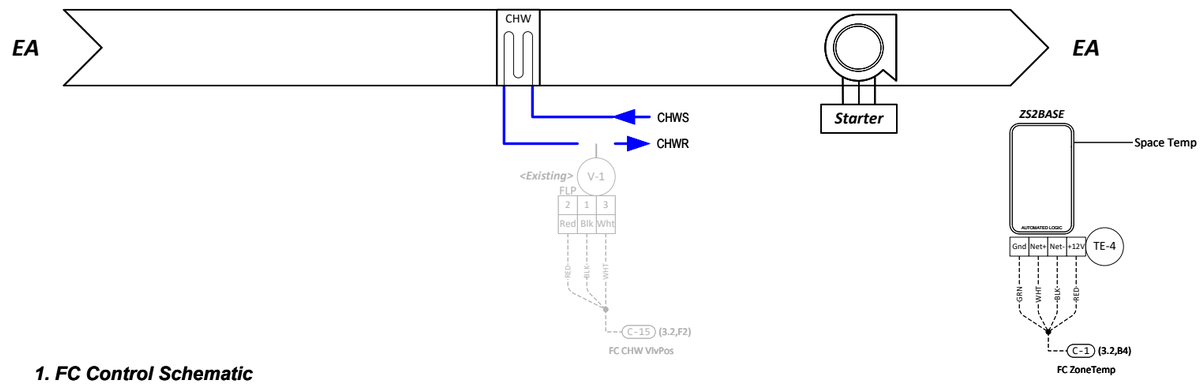

1. FC Control Schematic

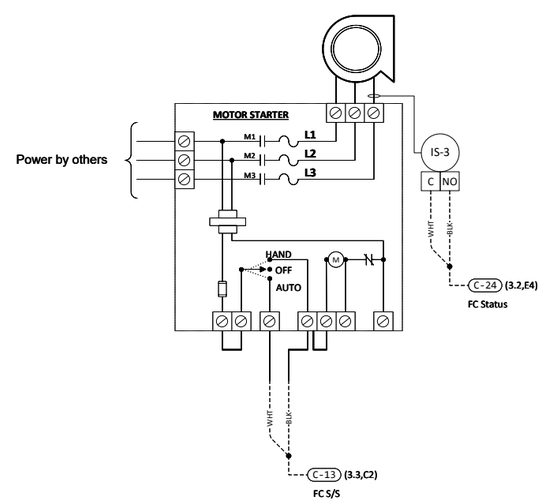

2. FC Starter Wiring Schematic

SUNBELT CONTROLS
4511 Willow Road
Suite 4
Pleasanton, CA 94588

PROJECT:
L-1201 Science Building BAS
2700 E Leland Rd.
Pittsburg, CA 94565

FILENAME: 03 - TCP-4 - CHW System

REV	DESCRIPTION	DATE	BY
		0	
		0	
		0	
		0	
0	As-Built	10/11/2023	NS

DRAWING NAME: FC Control Schematic

CONTRACT NO: 80860787 | SE: | DE: NS | PR:

DRAWING NO.: 3.7

TCP-4 Field Parts Tag Schedule

Field Bill of Materials w/ Tags

Tag	Part Number	Product Description	Manufacturer	Panel Or Field	Quantity	
CR-5	RIB2401B	Encl. Relay, 20A, SPDT, 24VAC/DC or 120VAC Coils	Functional Devices	F	1	
FT-1	FSM-3BF06-1021-FA3-131	Flow Xmtr, Insertion, Electromag, 6", hot tap vlv,4-20mA	Onicon	F	1	Future Install
IS-3	H608	Current Switch, Split Core, Adj. Setpoint to 0.5A, Mini	Veris	F	1	
N-1	BA/WSK	OA Sensor Weather Shield, Wall Mount	BAPI	F	1	
PDT-1	2301-100PD-5V-11-B	Diff. Press. Transmitter, Wet, 4-20mA, 0-100 psid,	Setra	F	1	
PT-1	P51-100-20	Gage Pressure Trans, 0-100 psig, 4-20mA	Kele	F	1	
TE-1	NSB-10K-2-O-BB2-A	Outside Air in BAPI BOX 2, 1/2 Size NEMA 4X Box	Automated Logic	F	1	
TE-2	BA/10K-2-I-4"-SS-BB2	Immersion 4" Insertion, Stainless Threads, BAPI Box 4 IP44	BAPI	F	1	
TE-3	BA/10K-2-I-4"-SS-BB2	Immersion 4" Insertion, Stainless Threads, BAPI Box 4 IP44	BAPI	F	1	
TE-4	ZS2-ALC	ZS2 Std Space Temp Sensor, Rnet	Automated Logic	F	1	
V-1	Existing Valve	Existing Valve	Existing Valve	F	1	

SUNBELT CONTROLS
4511 Willow Road
Suite 4
Pleasanton, CA 94588

PROJECT:
L-1201 Science Building BAS
2700 E Leland Rd.
Pittsburg, CA 94565

FILENAME: 03 - TCP-4 - CHW System

REV	DESCRIPTION	DATE	BY
0	As-Built	10/11/2023	NS

DRAWING NAME: TCP-4 Field Parts Tag Schedule

CONTRACT NO: 80860787 | SE: | DE: NS | PR:

DRAWING NO.: 3.8

TCP-2 Panel Layout - AH-2

Panel Bill of Materials w/ Tags

Tag	Part Number	Product Description	Manufacturer	Panel Or Field	Quantity
ALC-1	OF1628-NR	BACnet Building Controller (Non-Routing), 16 UO, 28 UI	Automated Logic	P	1
CR-1	RH1B-ULCDC24V	Plug-in Relay, SPDT, Blade, Indicator Light and check button, 24 VDC coil voltage	Idec	P	1
CR-2	RH1B-ULCDC24V	Plug-in Relay, SPDT, Blade, Indicator Light and check button, 24 VDC coil voltage	Idec	P	1
ES-1	2902994	120-240VAC to 24VDC Power Supply, 90W, 3.75A, DIN	Phoenix Contact	P	1
ES-2	2902994	120-240VAC to 24VDC Power Supply, 90W, 3.75A, DIN	Phoenix Contact	P	1
G-1	SH1B-05	SH1B Relay Socket	Idec	P	1
G-2	SH1B-05	SH1B Relay Socket	Idec	P	1
ISE-1	QL-10	Circuit Breaker, 120/240VAC, Din rail mount, 10A	Kele	P	1
PA-1	804155	120VAC Single Receptacle, DIN Mount	Phoenix Contact	P	1
PDT-1	2671-R25WB-11-A1-HD	Dry Diff Press, Panel Mount, LCD, +/-0.25"wc 0.5%, 4-20mA, 24VAC	Setra	P	1
PDT-2	2671-010WD-11-A1-HD	Dry Diff Press, Panel Mount, LCD, 0-10"wc 0.5%, 4-20mA, 24VAC	Setra	P	1
PDT-3	2671-010WD-11-A1-HD	Dry Diff Press, Panel Mount, LCD, 0-10"wc 0.5%, 4-20mA, 24VAC	Setra	P	1
SUB-1	SCE-30P24	Saginaw Sub-panel, Solid, NEMA-4/12/3R, 30x24	Saginaw	P	1

TCP-2

(30x24x6 NEMA-4)

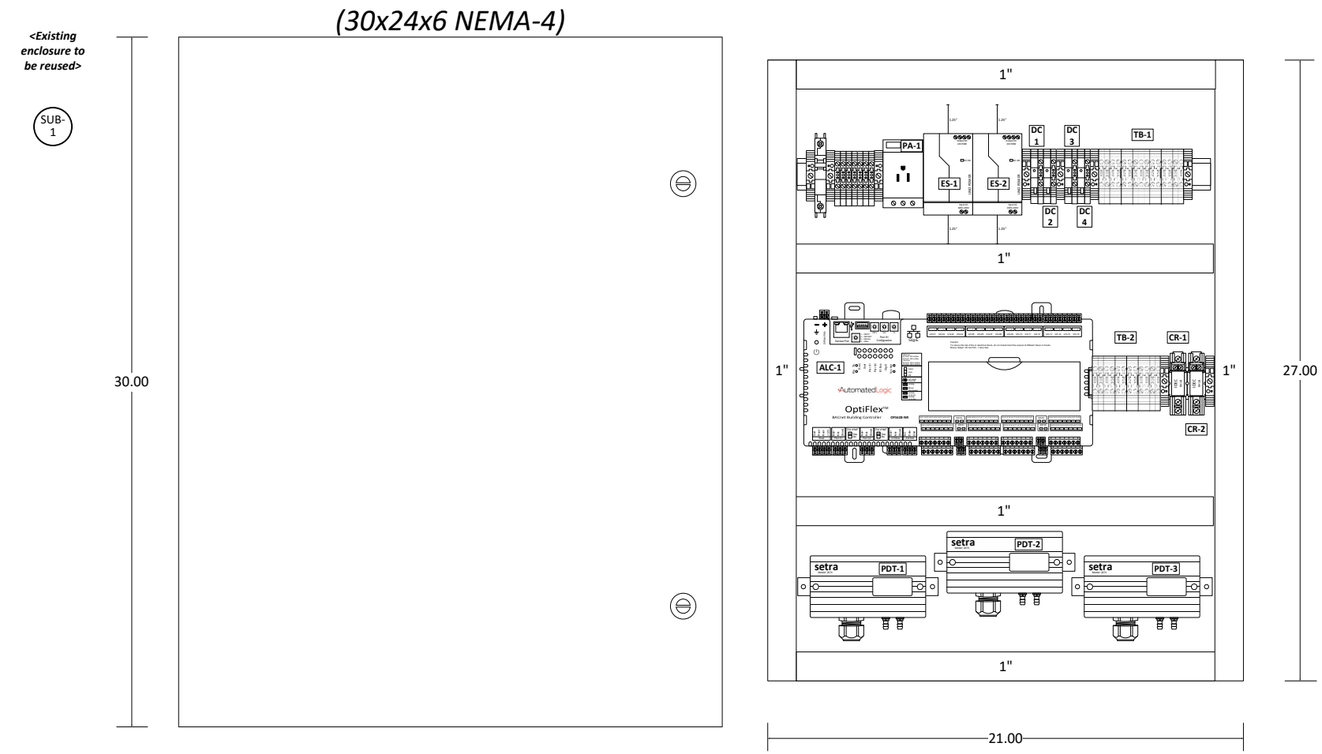

Panel Location: On Unit

SUNBELT CONTROLS
4511 Willow Road
Suite 4
Pleasanton, CA 94588

PROJECT:
L-1201 Science Building BAS
2700 E Leland Rd.
Pittsburg, CA 94565

FILENAME: 04 - TCP-2 - AH-2

REV	DESCRIPTION	DATE	BY
0	As-Built	10/11/2023	NS

DRAWING NAME: TCP-2 Panel Layout - AH-2

CONTRACT NO: 80860787 | SE: | DE: NS | PR:

DRAWING NO.: 4.1

TCP-2 Wiring Detail (1 of 2)

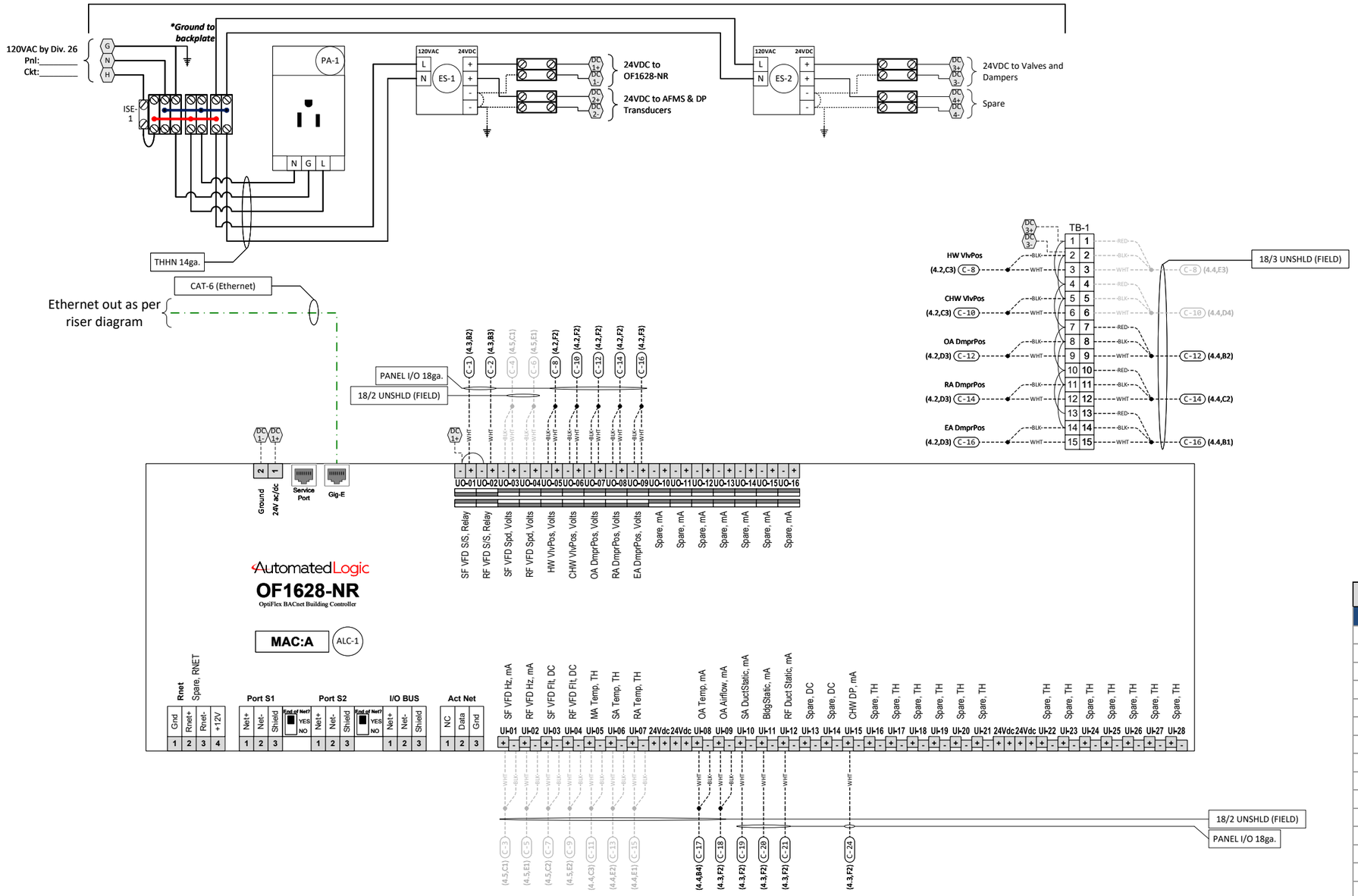

Panel continued on next page

Power Loop Schedule - VDC

Power Supply	Tag	Part Number	Watts
DC-1	ALC-1	OF1628-NR	50
DC-1	CR-1	RH1B-ULCDC24V	0.8
DC-1	CR-2	RH1B-ULCDC24V	0.8
DC-1	FT-1	OAM II	10
DC-1	PDT-1	2671-R25WB-11-A1-HD	0.5
DC-1	PDT-2	2671-010WD-11-A1-HD	0.5
DC-1	PDT-3	2671-010WD-11-A1-HD	0.5
DC-1	PDT-4	2301-100PD-5V-11-B	0.5
		Subtotal	63.6
DC-2	FCV-1	AFB24-SR	5.5
DC-2	FCV-10	NMB24-SR-T N4	3.5
DC-2	FCV-2	AFB24-SR	5.5
DC-2	FCV-3	AFB24-SR	5.5
DC-2	FCV-4	AFB24-SR	5.5
DC-2	FCV-5	AFB24-SR	5.5
DC-2	FCV-6	AFB24-SR	5.5
DC-2	FCV-7	AFB24-SR	5.5
DC-2	FCV-8	AFB24-SR	5.5
DC-2	FCV-9	AMB24-SR-T N4	2.5
		Subtotal	50

SUNBELT CONTROLS
4511 Willow Road
Suite 4
Pleasanton, CA 94588

PROJECT:
L-1201 Science Building BAS
2700 E Leland Rd.
Pittsburg, CA 94565

FILENAME: 04 - TCP-2 - AH-2

REV	DESCRIPTION	DATE	BY
0	As-Built	10/11/2023	NS

DRAWING NAME: TCP-2 Wiring Detail (1 of 2)

CONTRACT NO: 80860787 | SE: | DE: NS | PR:

DRAWING NO.: 4.2

TCP-2 Wiring Detail (2 of 2)

Panel continued from previous page

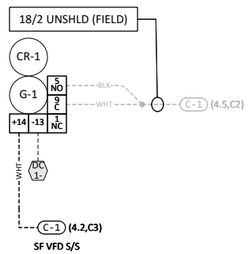

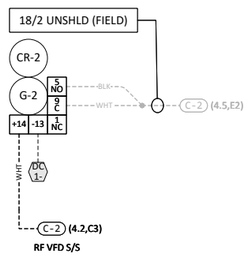

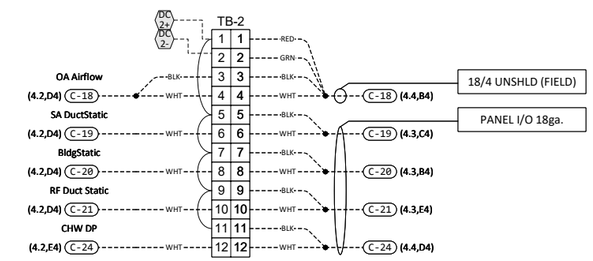

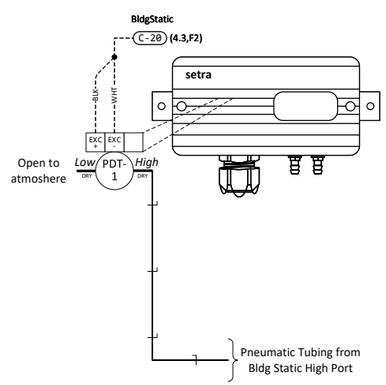

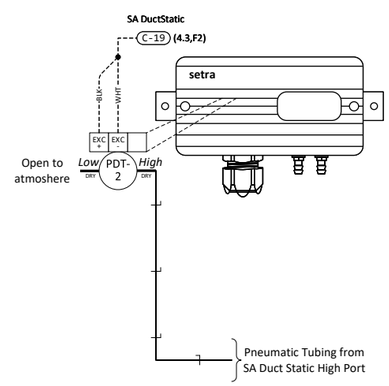

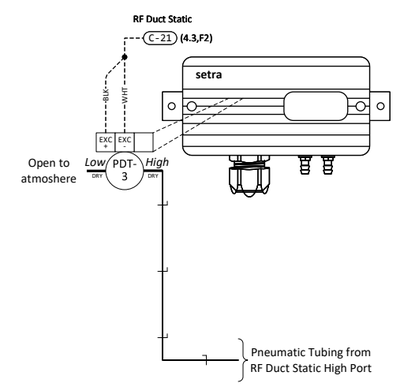

SUNBELT CONTROLS
4511 Willow Road
Suite 4
Pleasanton, CA 94588

PROJECT:
L-1201 Science Building BAS
2700 E Leland Rd.
Pittsburg, CA 94565

FILENAME: 04 - TCP-2 - AH-2

REV	DESCRIPTION	DATE	BY
0	As-Built	10/11/2023	NS

DRAWING NAME: TCP-2 Wiring Detail (2 of 2)

CONTRACT NO: 80860787 | SE: | DE: NS | PR:

DRAWING NO.: 4.3

AH-2 Control Schematic (1 of 2)

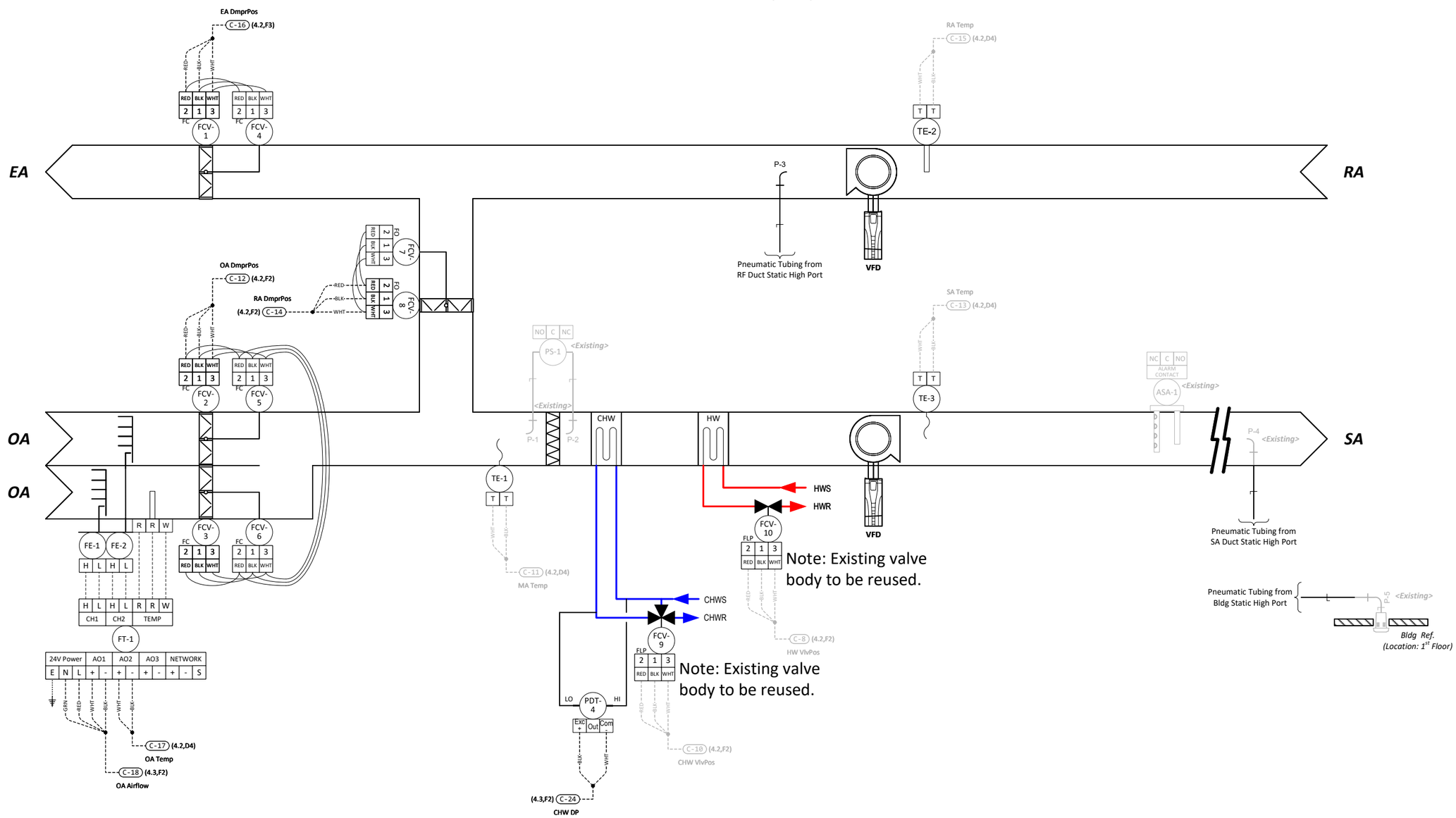

SUNBELT CONTROLS
4511 Willow Road
Suite 4
Pleasanton, CA 94588

PROJECT:
L-1201 Science Building BAS
2700 E Leland Rd.
Pittsburg, CA 94565

FILENAME: 04 - TCP-2 - AH-2

REV	DESCRIPTION	DATE	BY
0	As-Built	10/11/2023	NS

DRAWING NAME: AH-2 Control Schematic (1 of 2)

CONTRACT NO: 80860787 | SE: | DE: NS | PR:

DRAWING NO.: 4.4

AH-2 Control Schematic (2 of 2)

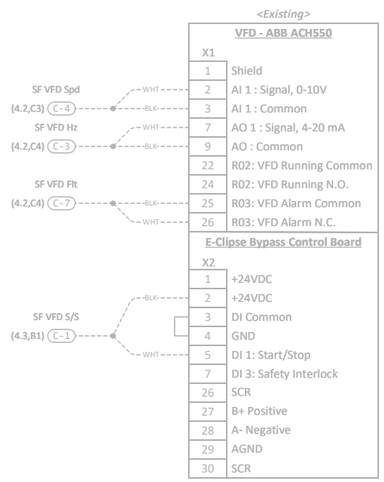

1. Supply Fan VFD Wiring Schematic

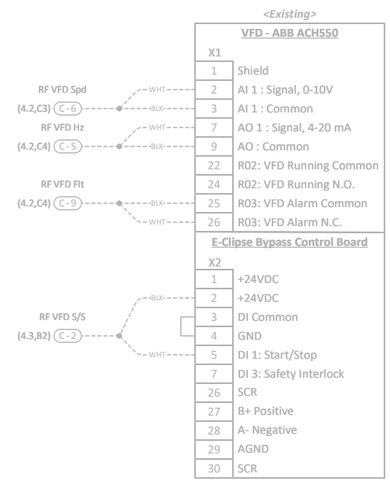

2. Return Fan VFD Wiring Schematic

SUNBELT CONTROLS
4511 Willow Road
Suite 4
Pleasanton, CA 94588

PROJECT:
L-1201 Science Building BAS
2700 E Leland Rd.
Pittsburg, CA 94565

FILENAME: 04 - TCP-2 - AH-2

REV	DESCRIPTION	DATE	BY
		0	
		0	
		0	
		0	
0	As-Built	10/11/2023	NS

DRAWING NAME:
AH-2 Control Schematic (2 of 2)

CONTRACT NO: 80860787 | SE: | DE: NS | PR:

DRAWING NO.: 4.5

TCP-2 Field Parts Tag Schedule

Field Bill of Materials w/ Tags

Tag	Part Number	Product Description	Manufacturer	Panel Or Field	Quantity
FCV-1	AFB24-SR	Dmpr. Act. 180 in-lbs, Spring Return, 2-10 V, 24 VAC,	Belimo	F	1
FCV-10	NMB24-SR-T N4	Dmpr. Act. 70 in-lbs, Non-Spring Return, 2-10 V, 24 VAC, NEMA 4	Belimo	F	1
FCV-2	AFB24-SR	Dmpr. Act. 180 in-lbs, Spring Return, 2-10 V, 24 VAC,	Belimo	F	1
FCV-3	AFB24-SR	Dmpr. Act. 180 in-lbs, Spring Return, 2-10 V, 24 VAC,	Belimo	F	1
FCV-4	AFB24-SR	Dmpr. Act. 180 in-lbs, Spring Return, 2-10 V, 24 VAC,	Belimo	F	1
FCV-5	AFB24-SR	Dmpr. Act. 180 in-lbs, Spring Return, 2-10 V, 24 VAC,	Belimo	F	1
FCV-6	AFB24-SR	Dmpr. Act. 180 in-lbs, Spring Return, 2-10 V, 24 VAC,	Belimo	F	1
FCV-7	AFB24-SR	Dmpr. Act. 180 in-lbs, Spring Return, 2-10 V, 24 VAC,	Belimo	F	1
FCV-8	AFB24-SR	Dmpr. Act. 180 in-lbs, Spring Return, 2-10 V, 24 VAC,	Belimo	F	1
FCV-9	AMB24-SR-T N4	Dmpr. Act. 160 in-lbs, Non-Spring Return, 2-10 V, 24 VAC, NEMA 4	Belimo	F	1
FE-1	Uni-Sensor	OA Flow Probe, 3", 1/8" NPT, SS	Air Monitor Corporation	F	1
FE-2	Uni-Sensor	OA Flow Probe, 3", 1/8" NPT, SS	Air Monitor Corporation	F	1
FT-1	OAM II	Outdoor Airflow Measuring System with Heater	Air Monitor Corporation	F	1
P-3	NSB-ZPS-ACC07-A	Static Pressure Probe Assembly	Automated Logic	F	1
PDT-4	2301-100PD-5V-11-B	Diff. Press. Transmitter, Wet, 4-20mA, 0-100 psid,	Setra	F	1
TE-1	NSB-10K-2-A-24-BB2-A	Continuous Averaging, 24' Length in BB2 NEMA 4X	Automated Logic	F	1
TE-2	NSB-10K-2-D-8-BB2-A	Duct, 8" Insertion, BB2 NEMA 4X	Automated Logic	F	1
TE-3	NSB-10K-2-A-24-BB2-A	Continuous Averaging, 24' Length in BB2 NEMA 4X	Automated Logic	F	1

SUNBELT CONTROLS
4511 Willow Road
Suite 4
Pleasanton, CA 94588

PROJECT:
L-1201 Science Building BAS
2700 E Leland Rd.
Pittsburg, CA 94565

FILENAME: 04 - TCP-2 - AH-2

REV	DESCRIPTION	DATE	BY
0	As-Built	10/11/2023	NS

DRAWING NAME: TCP-2 Field Parts Tag Schedule

CONTRACT NO: 80860787 | SE: | DE: NS | PR:

DRAWING NO.: 4.6

TCP-3 Panel Layout - AH-3

Panel Bill of Materials w/ Tags

Tag	Part Number	Product Description	Manufacturer	Panel Or Field	Quantity
ALC-1	OF1628-NR	BACnet Building Controller (Non-Routing), 16 UO, 28 UI	Automated Logic	P	1
CR-1	RH1B-ULCDC24V	Plug-in Relay, SPDT, Blade, Indicator Light and check button, 24 VDC coil voltage	Idec	P	1
CR-2	RH1B-ULCDC24V	Plug-in Relay, SPDT, Blade, Indicator Light and check button, 24 VDC coil voltage	Idec	P	1
ES-1	2902994	120-240VAC to 24VDC Power Supply, 90W, 3.75A, DIN	Phoenix Contact	P	1
ES-2	2902994	120-240VAC to 24VDC Power Supply, 90W, 3.75A, DIN	Phoenix Contact	P	1
G-1	SH1B-05	SH1B Relay Socket	Idec	P	1
G-2	SH1B-05	SH1B Relay Socket	Idec	P	1
ISE-1	QL-10	Circuit Breaker, 120/240VAC, Din rail mount, 10A	Kele	P	1
PA-1	804155	120VAC Single Receptacle, DIN Mount	Phoenix Contact	P	1
PDT-1	2671-R25WB-11-A1-HD	Dry Diff Press, Panel Mount, LCD, +/-0.25"wc 0.5%, 4-20mA, 24VAC	Setra	P	1
PDT-2	2671-010WD-11-A1-HD	Dry Diff Press, Panel Mount, LCD, 0-10"wc 0.5%, 4-20mA, 24VAC	Setra	P	1
PDT-3	2671-010WD-11-A1-HD	Dry Diff Press, Panel Mount, LCD, 0-10"wc 0.5%, 4-20mA, 24VAC	Setra	P	1
SUB-1	SCE-30P24	Saginaw Sub-panel, Solid, NEMA-4/12/3R, 30x24	Saginaw	P	1

TCP-3

(30x24x6 NEMA-4)

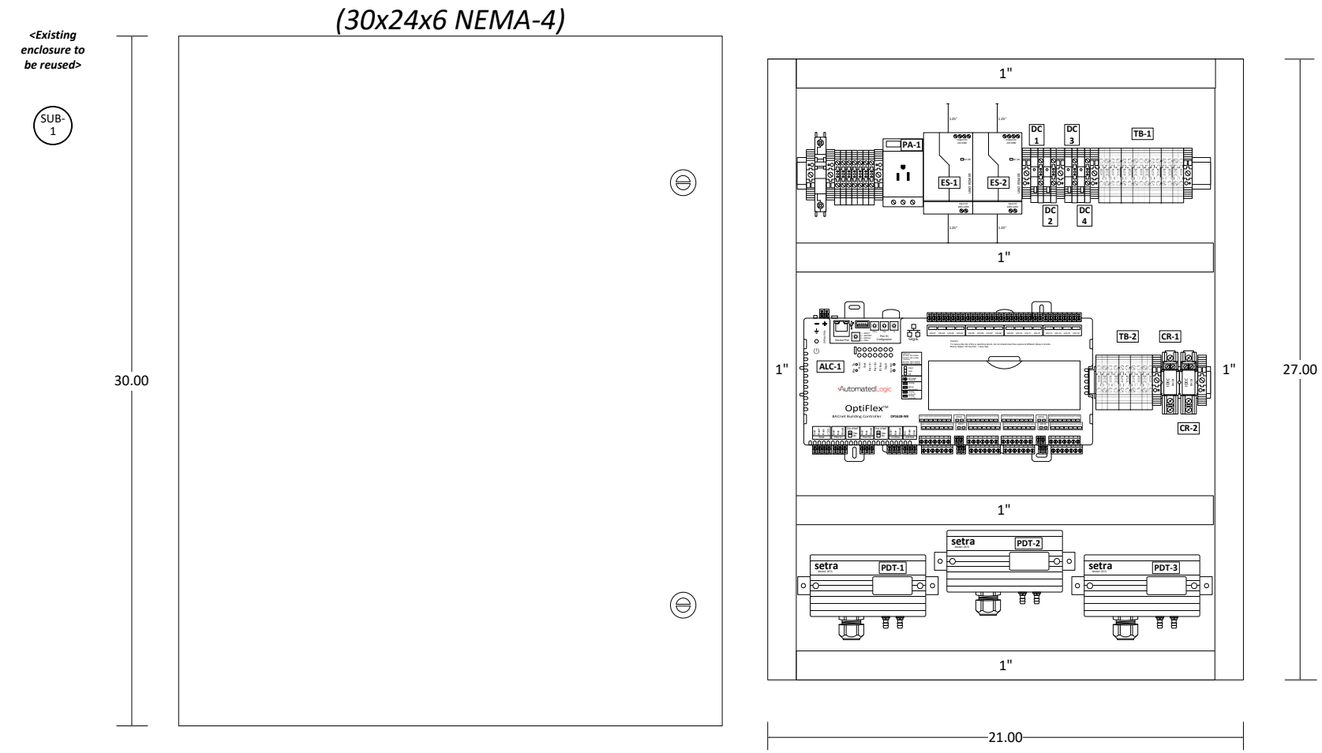

Panel Location: On Unit

SUNBELT CONTROLS
4511 Willow Road
Suite 4
Pleasanton, CA 94588

PROJECT:
L-1201 Science Building BAS
2700 E Leland Rd.
Pittsburg, CA 94565

FILENAME: 05 - TCP-3 - AH-3

REV	DESCRIPTION	DATE	BY
0	As-Built	10/11/2023	NS

DRAWING NAME: TCP-3 Panel Layout - AH-3

CONTRACT NO: 80860787 | SE: | DE: NS | PR:

DRAWING NO.: 5.1

TCP-3 Wiring Detail (1 of 2)

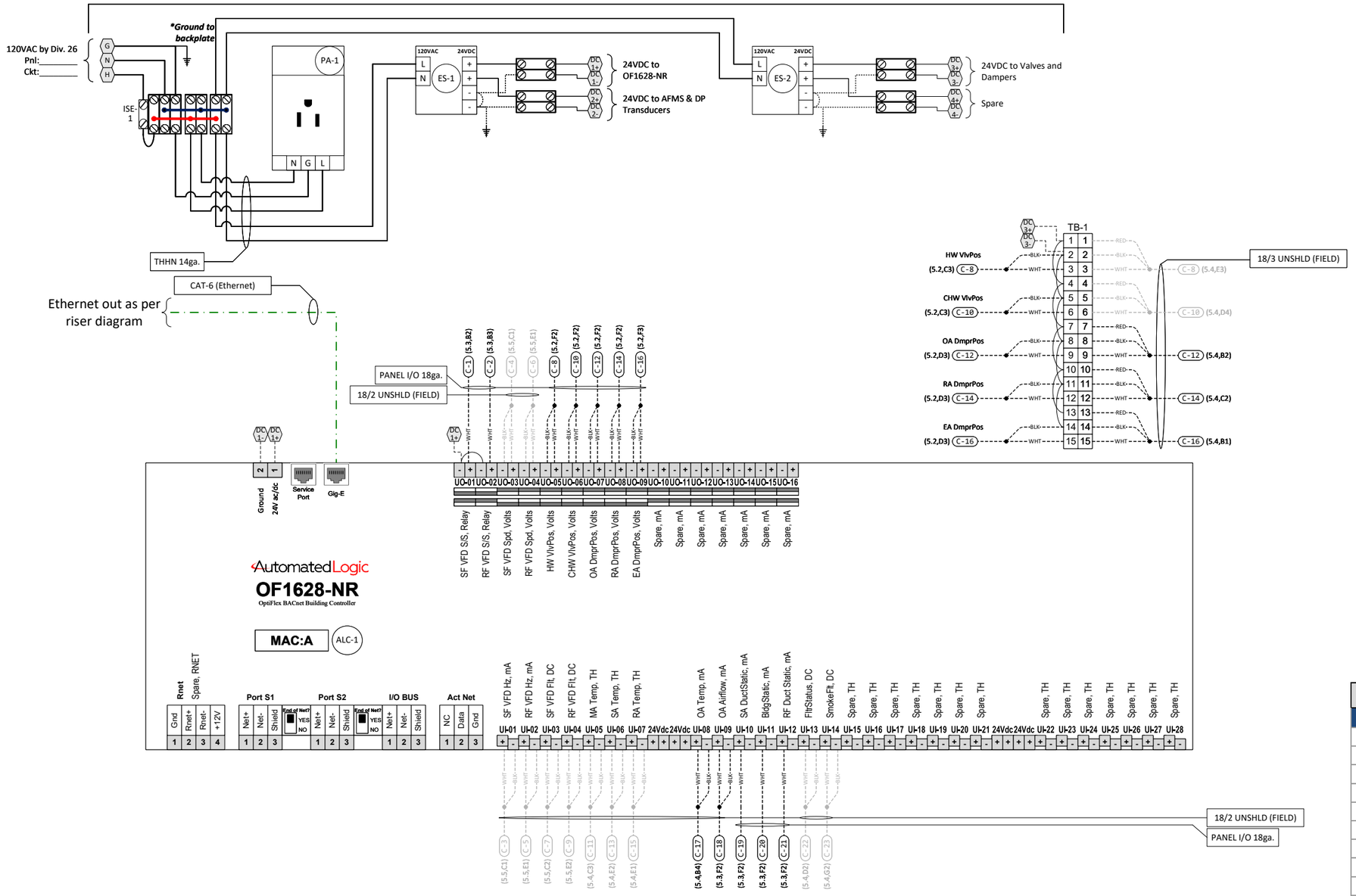

Panel continued on next page

Power Loop Schedule - VDC

Power Supply	Tag	Part Number	Watts
DC-1	ALC-1	OF1628-NR	50
DC-1	CR-1	RH1B-ULCDC24V	0.8
DC-1	CR-2	RH1B-ULCDC24V	0.8
DC-1	FT-1	OAM II	10
DC-1	PDT-1	2671-R25WB-11-A1-HD	0.5
DC-1	PDT-2	2671-010WD-11-A1-HD	0.5
DC-1	PDT-3	2671-010WD-11-A1-HD	0.5
		Subtotal	63.1
DC-2	FCV-1	AFB24-SR	5.5
DC-2	FCV-2	AFB24-SR	5.5
DC-2	FCV-3	AFB24-SR	5.5
DC-2	FCV-4	NMB24-SR-T N4	3.5
DC-2	FCV-5	NMB24-SR-T N4	3.5
		Subtotal	23.5

SUNBELT CONTROLS
4511 Willow Road
Suite 4
Pleasanton, CA 94588

PROJECT:
L-1201 Science Building BAS
2700 E Leland Rd.
Pittsburg, CA 94565

FILENAME: 05 - TCP-3 - AH-3

REV	DESCRIPTION	DATE	BY
0	As-Built	10/11/2023	NS

DRAWING NAME: TCP-3 Wiring Detail (1 of 2)

CONTRACT NO: 80860787 | SE: | DE: NS | PR:

DRAWING NO.: 5.2

TCP-3 Wiring Detail (2 of 2)

Panel continued from previous page

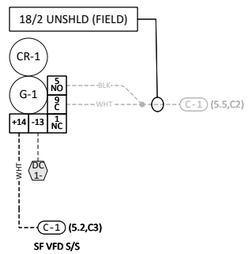

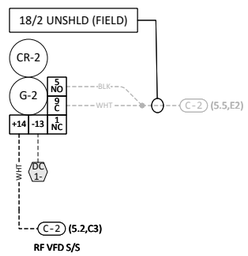

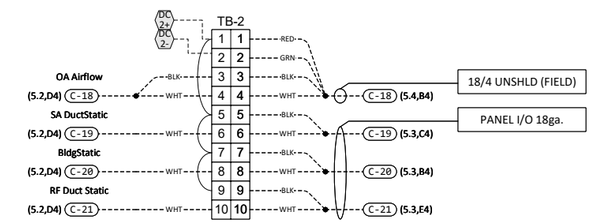

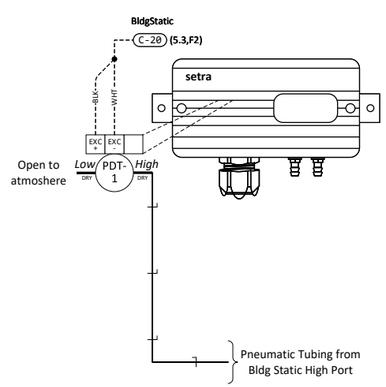

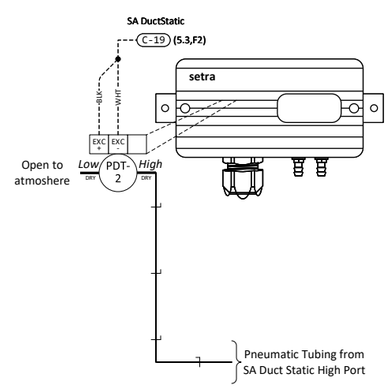

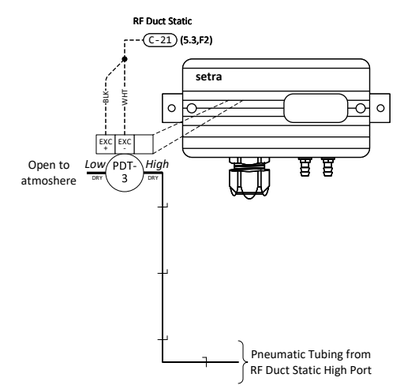

SUNBELT CONTROLS
4511 Willow Road
Suite 4
Pleasanton, CA 94588

PROJECT:
L-1201 Science Building BAS
2700 E Leland Rd.
Pittsburg, CA 94565

FILENAME: 05 - TCP-3 - AH-3

REV	DESCRIPTION	DATE	BY
0	As-Built	10/11/2023	NS

DRAWING NAME: TCP-3 Wiring Detail (2 of 2)

CONTRACT NO: 80860787 | SE: | DE: NS | PR:

DRAWING NO.: 5.3

AH-3 Control Schematic (1 of 2)

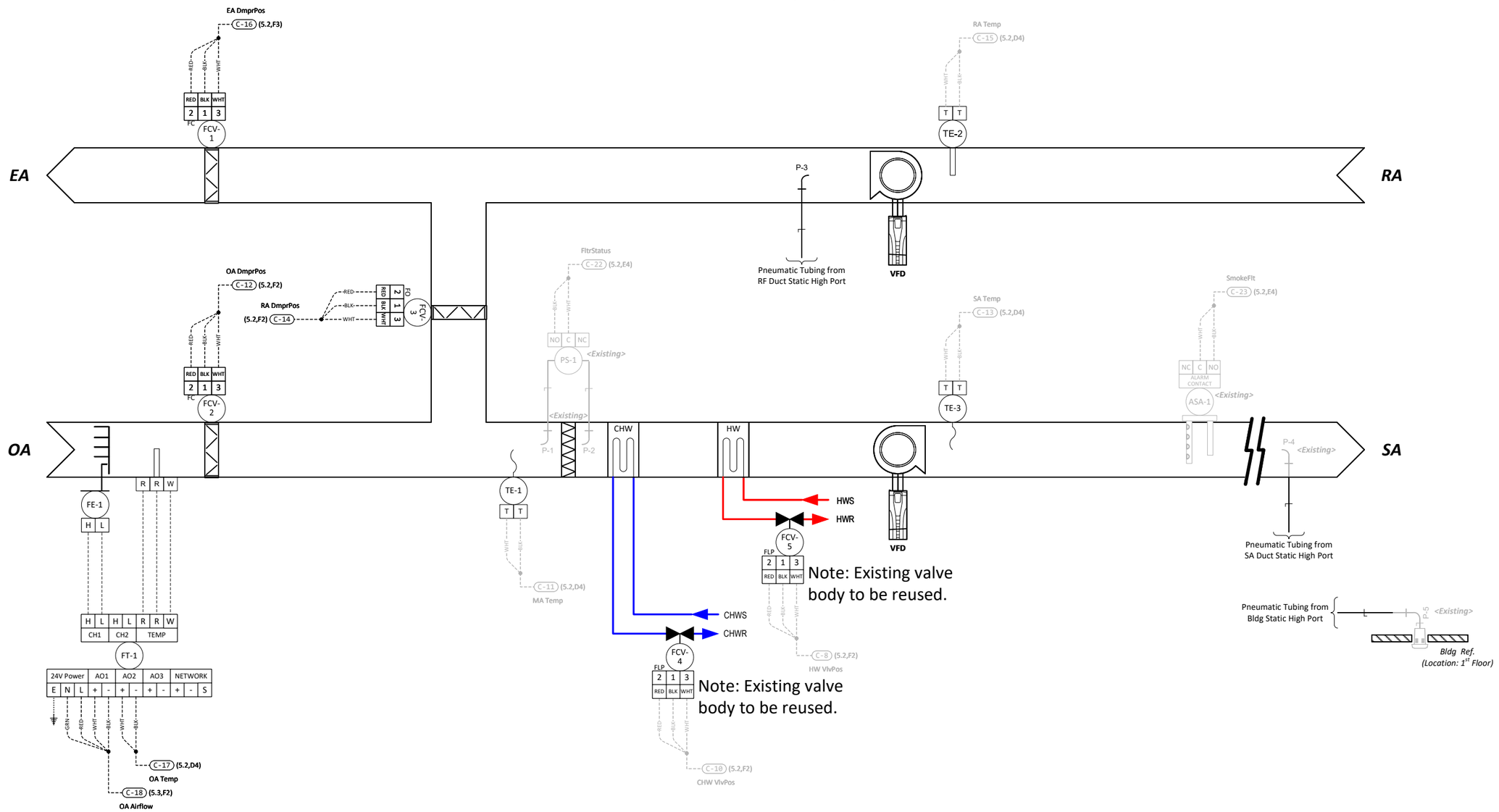

SUNBELT CONTROLS
4511 Willow Road
Suite 4
Pleasanton, CA 94588

PROJECT:
L-1201 Science Building BAS
2700 E Leland Rd.
Pittsburg, CA 94565

FILENAME: 05 - TCP-3 - AH-3

REV	DESCRIPTION	DATE	BY
		0	
		0	
		0	
		0	
0	As-Built	10/11/2023	NS

DRAWING NAME: AH-3 Control Schematic (1 of 2)

CONTRACT NO: 80860787 | SE: | DE: NS | PR:

DRAWING NO.: 5.4

AH-3 Control Schematic (2 of 2)

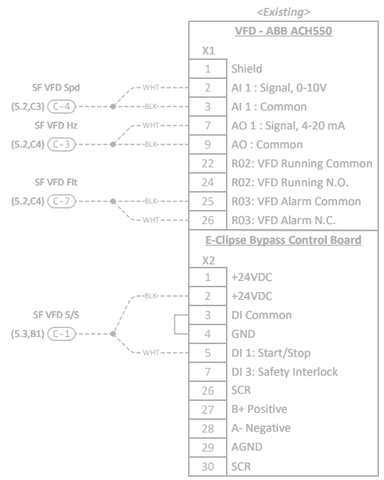

1. Supply Fan VFD Wiring Schematic

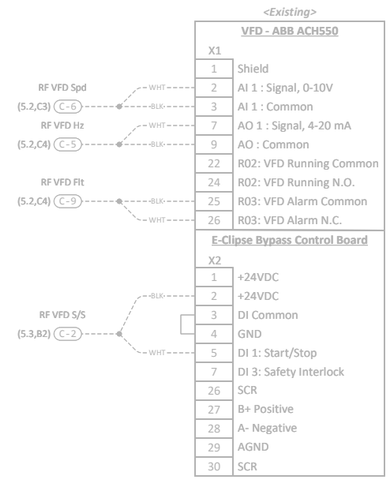

2. Return Fan VFD Wiring Schematic

SUNBELT CONTROLS
4511 Willow Road
Suite 4
Pleasanton, CA 94588

PROJECT:
L-1201 Science Building BAS
2700 E Leland Rd.
Pittsburg, CA 94565

FILENAME: 05 - TCP-3 - AH-3

REV	DESCRIPTION	DATE	BY
		0	
		0	
		0	
		0	
0	As-Built	10/11/2023	NS

DRAWING NAME:
AH-3 Control Schematic (2 of 2)

CONTRACT NO: 80860787 | SE: | DE: NS | PR:

DRAWING NO.: 5.5

TCP-3 Field Parts Tag Schedule

Field Bill of Materials w/ Tags

Tag	Part Number	Product Description	Manufacturer	Panel Or Field	Quantity
FCV-1	AFB24-SR	Dmpr. Act. 180 in-lbs, Spring Return, 2-10 V, 24 VAC,	Belimo	F	1
FCV-2	AFB24-SR	Dmpr. Act. 180 in-lbs, Spring Return, 2-10 V, 24 VAC,	Belimo	F	1
FCV-3	AFB24-SR	Dmpr. Act. 180 in-lbs, Spring Return, 2-10 V, 24 VAC,	Belimo	F	1
FCV-4	NMB24-SR-T N4	Dmpr. Act. 70 in-lbs, Non-Spring Return, 2-10 V, 24 VAC, NEMA 4	Belimo	F	1
FCV-5	NMB24-SR-T N4	Dmpr. Act. 70 in-lbs, Non-Spring Return, 2-10 V, 24 VAC, NEMA 4	Belimo	F	1
FE-1	Uni-Sensor	OA Flow Probe, 3", 1/8" NPT, SS	Air Monitor Corporation	F	1
FT-1	OAM II	Outdoor Airflow Measuring System with Heater	Air Monitor Corporation	F	1
P-3	NSB-ZPS-ACC07-A	Static Pressure Probe Assembly	Automated Logic	F	1
TE-1	NSB-10K-2-A-24-BB2-A	Continuous Averaging, 24' Length in BB2 NEMA 4X	Automated Logic	F	1
TE-2	NSB-10K-2-D-8-BB2-A	Duct, 8" Insertion, BB2 NEMA 4X	Automated Logic	F	1
TE-3	NSB-10K-2-A-24-BB2-A	Continuous Averaging, 24' Length in BB2 NEMA 4X	Automated Logic	F	1

SUNBELT CONTROLS
4511 Willow Road
Suite 4
Pleasanton, CA 94588

PROJECT:
L-1201 Science Building BAS
2700 E Leland Rd.
Pittsburg, CA 94565

FILENAME: 05 - TCP-3 - AH-3

REV	DESCRIPTION	DATE	BY
0	As-Built	10/11/2023	NS

DRAWING NAME: TCP-3 Field Parts Tag Schedule

CONTRACT NO: 80860787 | SE: | DE: NS | PR:

DRAWING NO.: 5.6

TCP-1 Panel Layout - AC-1

Panel Bill of Materials w/ Tags

Tag	Part Number	Product Description	Manufacturer	Panel Or Field	Quantity
ALC-1	OF1628-NR	BACnet Building Controller (Non-Routing), 16 UO, 28 UI	Automated Logic	P	1
CR-1	RH1B-ULCDC24V	Plug-in Relay, SPDT, Blade, Indicator Light and check button, 24 VDC coil voltage	Idec	P	1
CR-2	RH1B-ULCDC24V	Plug-in Relay, SPDT, Blade, Indicator Light and check button, 24 VDC coil voltage	Idec	P	1
CR-3	RH1B-ULCDC24V	Plug-in Relay, SPDT, Blade, Indicator Light and check button, 24 VDC coil voltage	Idec	P	1
CR-4	RH1B-ULCDC24V	Plug-in Relay, SPDT, Blade, Indicator Light and check button, 24 VDC coil voltage	Idec	P	1
ES-1	2902994	120-240VAC to 24VDC Power Supply, 90W, 3.75A, DIN	Phoenix Contact	P	1
ES-2	2902994	120-240VAC to 24VDC Power Supply, 90W, 3.75A, DIN	Phoenix Contact	P	1
G-1	SH1B-05	SH1B Relay Socket	Idec	P	1
G-2	SH1B-05	SH1B Relay Socket	Idec	P	1
G-3	SH1B-05	SH1B Relay Socket	Idec	P	1
G-4	SH1B-05	SH1B Relay Socket	Idec	P	1
ISE-1	QL-10	Circuit Breaker, 120/240VAC, Din rail mount, 10A	Kele	P	1
PA-1	804155	120VAC Single Receptacle, DIN Mount	Phoenix Contact	P	1
SUB-1	SCE-30P24	Saginaw Sub-panel, Solid, NEMA-4/12/3R, 30x24	Saginaw	P	1

TCP-1

(30x24x6 NEMA-4)

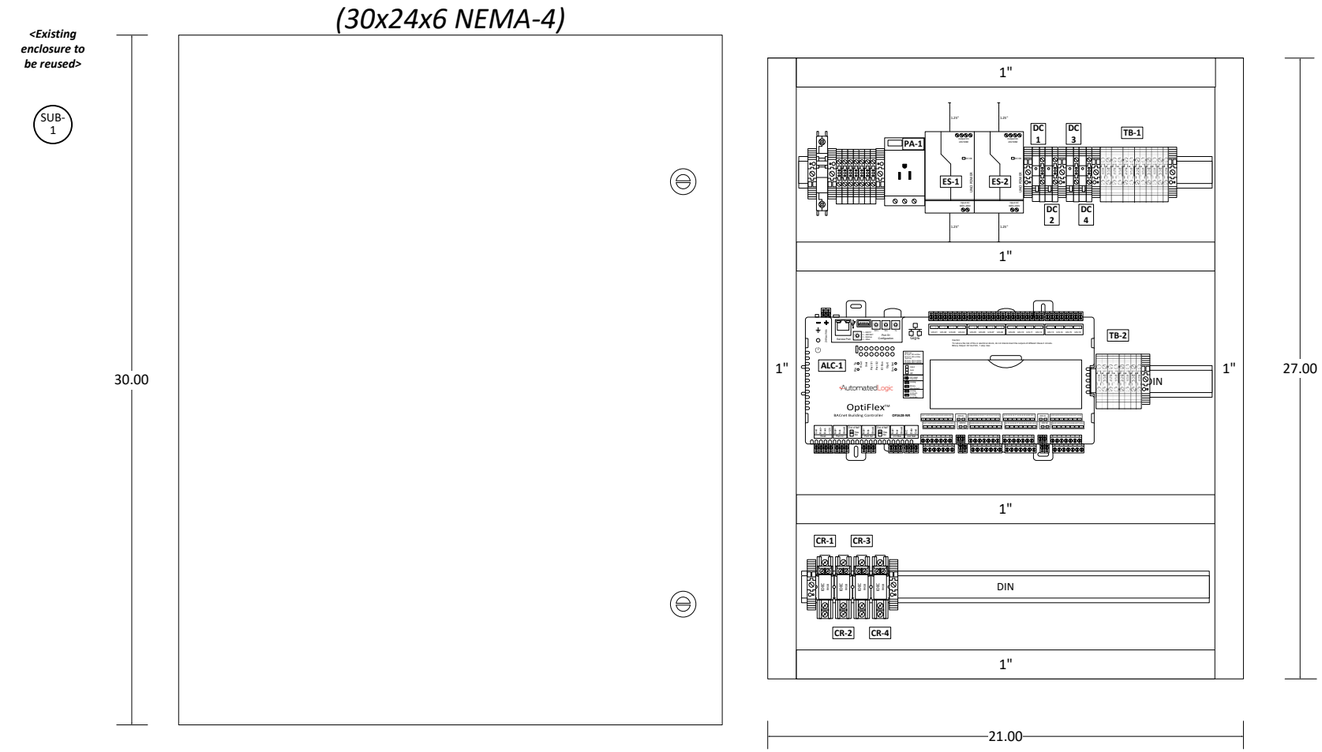

Panel Location: On Unit

SUNBELT CONTROLS
4511 Willow Road
Suite 4
Pleasanton, CA 94588

PROJECT:
L-1201 Science Building BAS
2700 E Leland Rd.
Pittsburg, CA 94565

FILENAME: 06 - TCP-1 - AC-1

REV	DESCRIPTION	DATE	BY
		0	
		0	
		0	
		0	
0	As-Built	10/11/2023	NS

DRAWING NAME: TCP-1 Panel Layout - AC-1

CONTRACT NO: 80860787 | SE: | DE: NS | PR:

DRAWING NO.: 6.1

TCP-1 Wiring Detail (1 of 2)

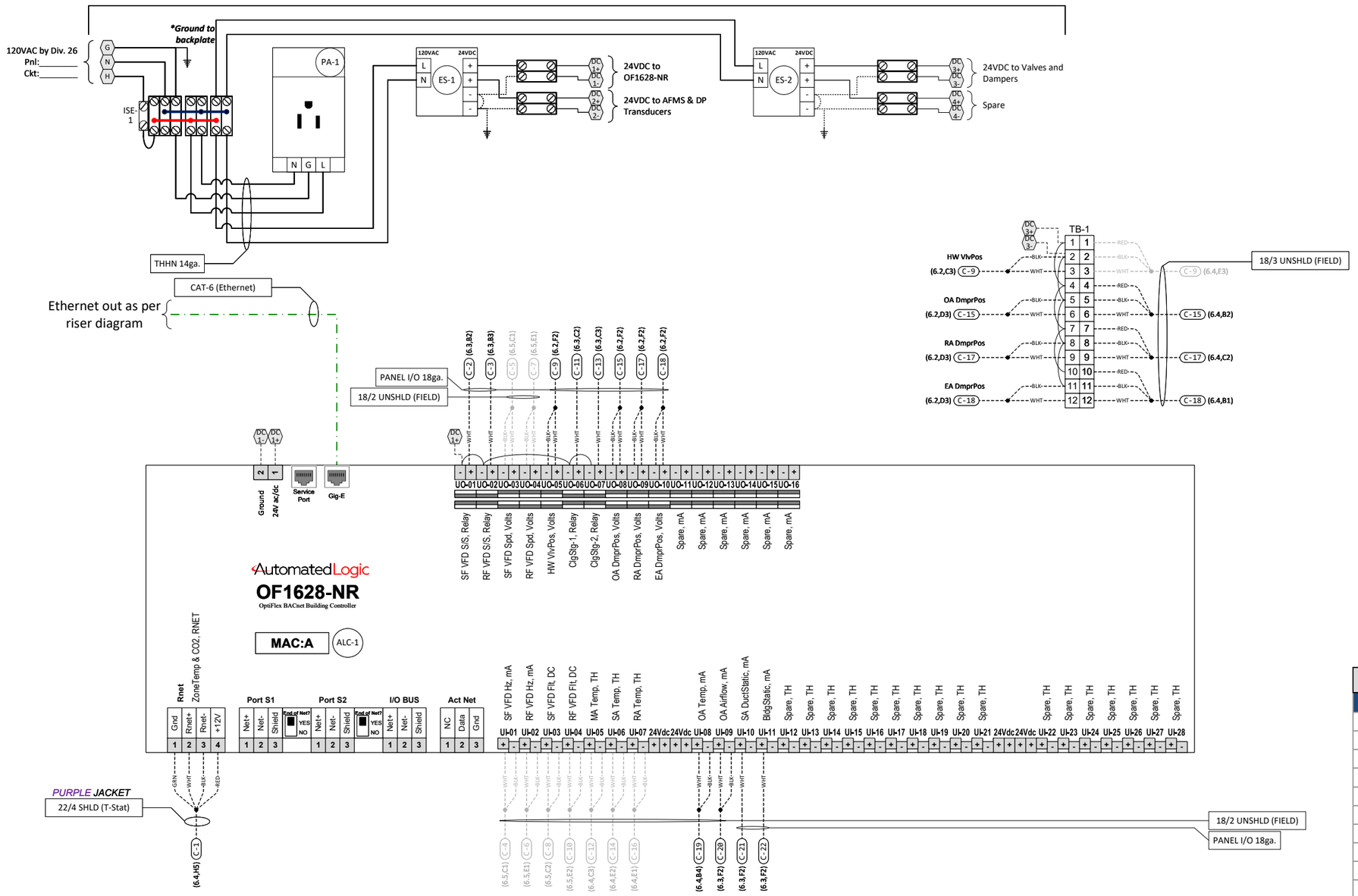

Panel continued on next page

Power Loop Schedule - VDC

Power Supply	Tag	Part Number	Watts
DC-1	ALC-1	OF1628-NR	50
DC-1	CR-1	RH1B-ULCDC24V	0.8
DC-1	CR-2	RH1B-ULCDC24V	0.8
DC-1	CR-3	RH1B-ULCDC24V	0.8
DC-1	CR-4	RH1B-ULCDC24V	0.8
DC-1	FT-1	OAM II	10
DC-1	PDT-1	2671-R25WB-11-A1-HD	0.5
DC-1	PDT-2	2671-010WD-11-A1-HD	0.5
		Subtotal	64.2
DC-2	FCV-1	AFB24-SR	5.5
DC-2	FCV-2	AFB24-SR	5.5
DC-2	FCV-3	AFB24-SR	5.5
DC-2	FCV-4	AFB24-SR	5.5
DC-2	FCV-5	NMB24-SR-T N4	3.5
		Subtotal	25.5

SUNBELT CONTROLS
4511 Willow Road
Suite 4
Pleasanton, CA 94588

PROJECT:
L-1201 Science Building BAS
2700 E Leland Rd.
Pittsburg, CA 94565

FILENAME: 06 - TCP-1 - AC-1

REV	DESCRIPTION	DATE	BY
0	As-Built	10/11/2023	NS

DRAWING NAME: TCP-1 Wiring Detail (1 of 2)

CONTRACT NO: 80860787 | SE: | DE: NS | PR:

DRAWING NO.: 6.2

TCP-1 Wiring Detail (2 of 2)

Panel continued from previous page

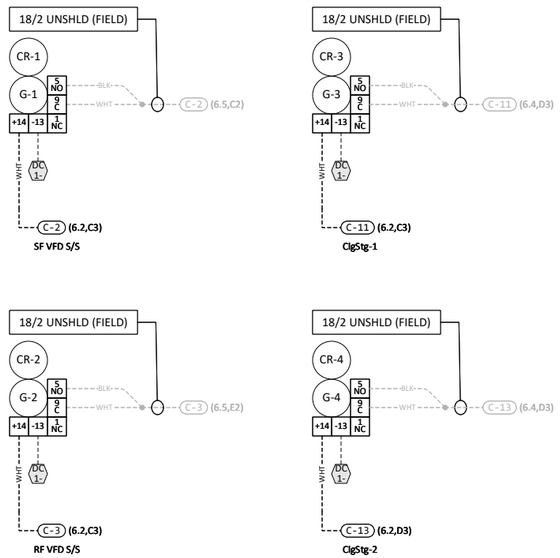

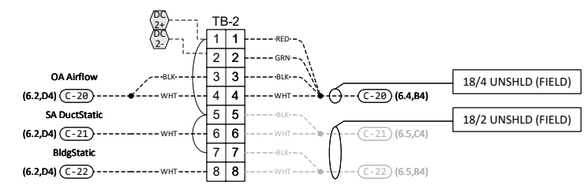

SUNBELT CONTROLS
4511 Willow Road
Suite 4
Pleasanton, CA 94588

PROJECT:
L-1201 Science Building BAS
2700 E Leland Rd.
Pittsburg, CA 94565

FILENAME: 06 - TCP-1 - AC-1

REV	DESCRIPTION	DATE	BY
		0	
		0	
		0	
		0	
0	As-Built	10/11/2023	NS

DRAWING NAME:
TCP-1 Wiring Detail (2 of 2)

CONTRACT NO: 80860787 | SE: | DE: NS | PR:

DRAWING NO.: 6.3

AC-1 Control Schematic (1 of 2)

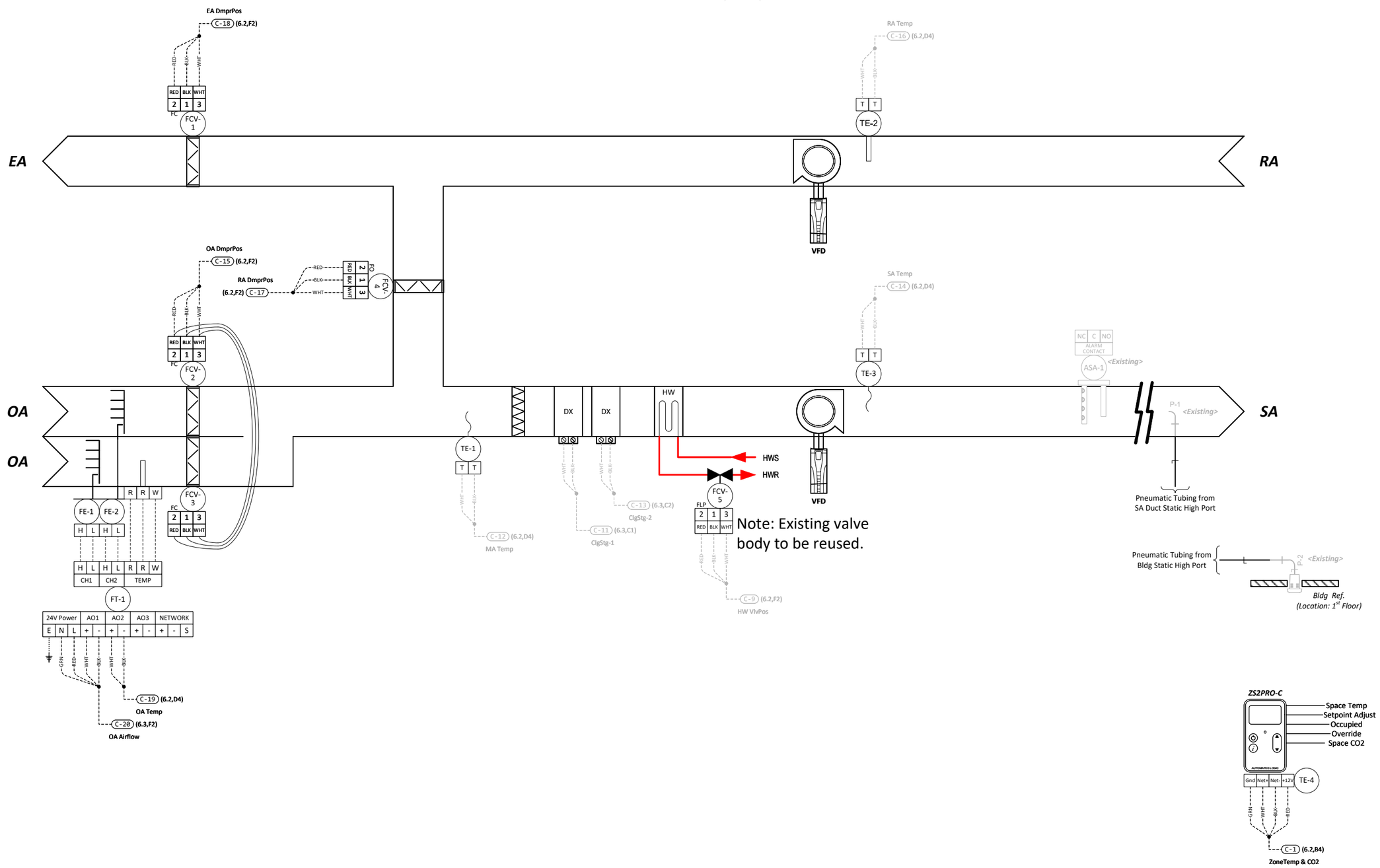

SUNBELT CONTROLS
4511 Willow Road
Suite 4
Pleasanton, CA 94588

PROJECT:
L-1201 Science Building BAS
2700 E Leland Rd.
Pittsburg, CA 94565

FILENAME: 06 - TCP-1 - AC-1

REV	DESCRIPTION	DATE	BY
		0	
		0	
		0	
		0	
0	As-Built	10/11/2023	NS

DRAWING NAME: AC-1 Control Schematic (1 of 2)

CONTRACT NO: 80860787 | SE: | DE: NS | PR:

DRAWING NO.: 6.4

AC-1 Control Schematic (2 of 2)

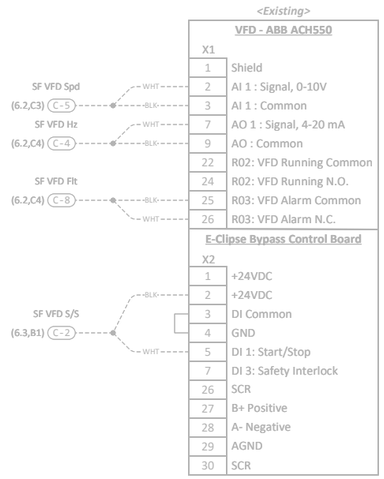

1. Supply Fan VFD Wiring Schematic

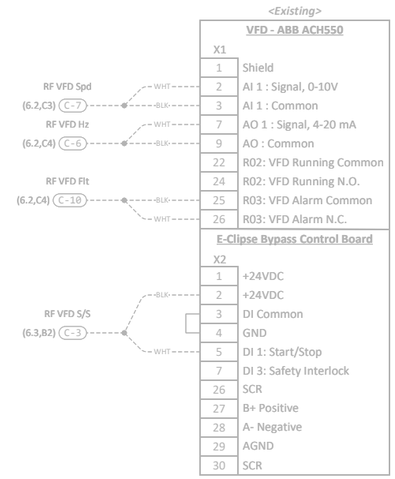

2. Return Fan VFD Wiring Schematic

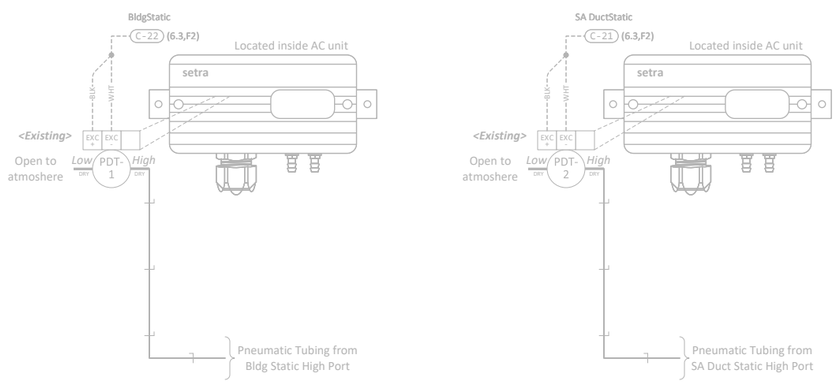

3. Static Pressures Wiring Schematic

SUNBELT CONTROLS
4511 Willow Road
Suite 4
Pleasanton, CA 94588

PROJECT:
L-1201 Science Building BAS
2700 E Leland Rd.
Pittsburg, CA 94565

FILENAME: 06 - TCP-1 - AC-1

REV	DESCRIPTION	DATE	BY
		0	
		0	
		0	
		0	
0	As-Built	10/11/2023	NS

DRAWING NAME:
AC-1 Control Schematic (2 of 2)

CONTRACT NO: 80860787 | **SE:** | **DE: NS** | **PR:**

DRAWING NO.: 6.5

TCP-1 Field Parts Tag Schedule

Field Bill of Materials w/ Tags

Tag	Part Number	Product Description	Manufacturer	Panel Or Field	Quantity
FCV-1	AFB24-SR	Dmpr. Act. 180 in-lbs, Spring Return, 2-10 V, 24 VAC,	Belimo	F	1
FCV-2	AFB24-SR	Dmpr. Act. 180 in-lbs, Spring Return, 2-10 V, 24 VAC,	Belimo	F	1
FCV-3	AFB24-SR	Dmpr. Act. 180 in-lbs, Spring Return, 2-10 V, 24 VAC,	Belimo	F	1
FCV-4	AFB24-SR	Dmpr. Act. 180 in-lbs, Spring Return, 2-10 V, 24 VAC,	Belimo	F	1
FCV-5	NMB24-SR-T N4	Dmpr. Act. 70 in-lbs, Non-Spring Return, 2-10 V, 24 VAC, NEMA 4	Belimo	F	1
FE-1	Uni-Sensor	OA Flow Probe, 3", 1/8" NPT, SS	Air Monitor Corporation	F	1
FE-2	Uni-Sensor	OA Flow Probe, 3", 1/8" NPT, SS	Air Monitor Corporation	F	1
FT-1	OAM II	Outdoor Airflow Measuring System with Heater	Air Monitor Corporation	F	1
TE-1	NSB-10K-2-A-24-BB2-A	Continuous Averaging, 24' Length in BB2 NEMA 4X	Automated Logic	F	1
TE-2	NSB-10K-2-D-8-BB2-A	Duct, 8" Insertion, BB2 NEMA 4X	Automated Logic	F	1
TE-3	NSB-10K-2-A-24-BB2-A	Continuous Averaging, 24' Length in BB2 NEMA 4X	Automated Logic	F	1
TE-4	ZS2P-C-ALC	ZS2 Pro Space Temp Sensor w/LCD, CO2, Rnet, SP Adj, Ovrd	Automated Logic	F	1

SUNBELT CONTROLS
4511 Willow Road
Suite 4
Pleasanton, CA 94588

PROJECT:
L-1201 Science Building BAS
2700 E Leland Rd.
Pittsburg, CA 94565

FILENAME: 06 - TCP-1 - AC-1

REV	DESCRIPTION	DATE	BY
		0	
		0	
		0	
		0	
0	As-Built	10/11/2023	NS

DRAWING NAME:
TCP-1 Field Parts Tag Schedule

CONTRACT NO: 80860787 | SE: | DE: NS | PR:

DRAWING NO.: 6.6

TCP-5 Panel Layout - EF-1,2,3,4,5,8

Panel Bill of Materials w/ Tags

Tag	Part Number	Product Description	Manufacturer	Panel Or Field	Quantity
ALC-1	OF1628-NR	BACnet Building Controller (Non-Routing), 16 UO, 28 UI	Automated Logic	P	1
CR-1	RH1B-ULCDC24V	Plug-in Relay, SPDT, Blade, Indicator Light and check button, 24 VDC coil voltage	Idec	P	1
CR-2	RH1B-ULCDC24V	Plug-in Relay, SPDT, Blade, Indicator Light and check button, 24 VDC coil voltage	Idec	P	1
CR-3	RH1B-ULCDC24V	Plug-in Relay, SPDT, Blade, Indicator Light and check button, 24 VDC coil voltage	Idec	P	1
CR-4	RH1B-ULCDC24V	Plug-in Relay, SPDT, Blade, Indicator Light and check button, 24 VDC coil voltage	Idec	P	1
CR-5	RH1B-ULCDC24V	Plug-in Relay, SPDT, Blade, Indicator Light and check button, 24 VDC coil voltage	Idec	P	1
CR-6	RH1B-ULCDC24V	Plug-in Relay, SPDT, Blade, Indicator Light and check button, 24 VDC coil voltage	Idec	P	1
ES-1	2902994	120-240VAC to 24VDC Power Supply, 90W, 3.75A, DIN	Phoenix Contact	P	1
G-1	SH1B-05	SH1B Relay Socket	Idec	P	1
G-2	SH1B-05	SH1B Relay Socket	Idec	P	1
G-3	SH1B-05	SH1B Relay Socket	Idec	P	1
G-4	SH1B-05	SH1B Relay Socket	Idec	P	1
G-5	SH1B-05	SH1B Relay Socket	Idec	P	1
G-6	SH1B-05	SH1B Relay Socket	Idec	P	1
ISE-1	QL-10	Circuit Breaker, 120/240VAC, Din rail mount, 10A	Kele	P	1
PA-1	804155	120VAC Single Receptacle, DIN Mount	Phoenix Contact	P	1
PDT-1	2671-005WD-11-A1-HD	Dry Diff Press, Panel Mount, LCD, 0-5"wc 0.5%, 4-20mA, 24VAC	Setra	P	1
SUB-1	A30P24	Hoffman Sub-panel, Solid, NEMA-3R, 30x24	Hoffman	P	1

TCP-5

(30x24x8 NEMA-3R)

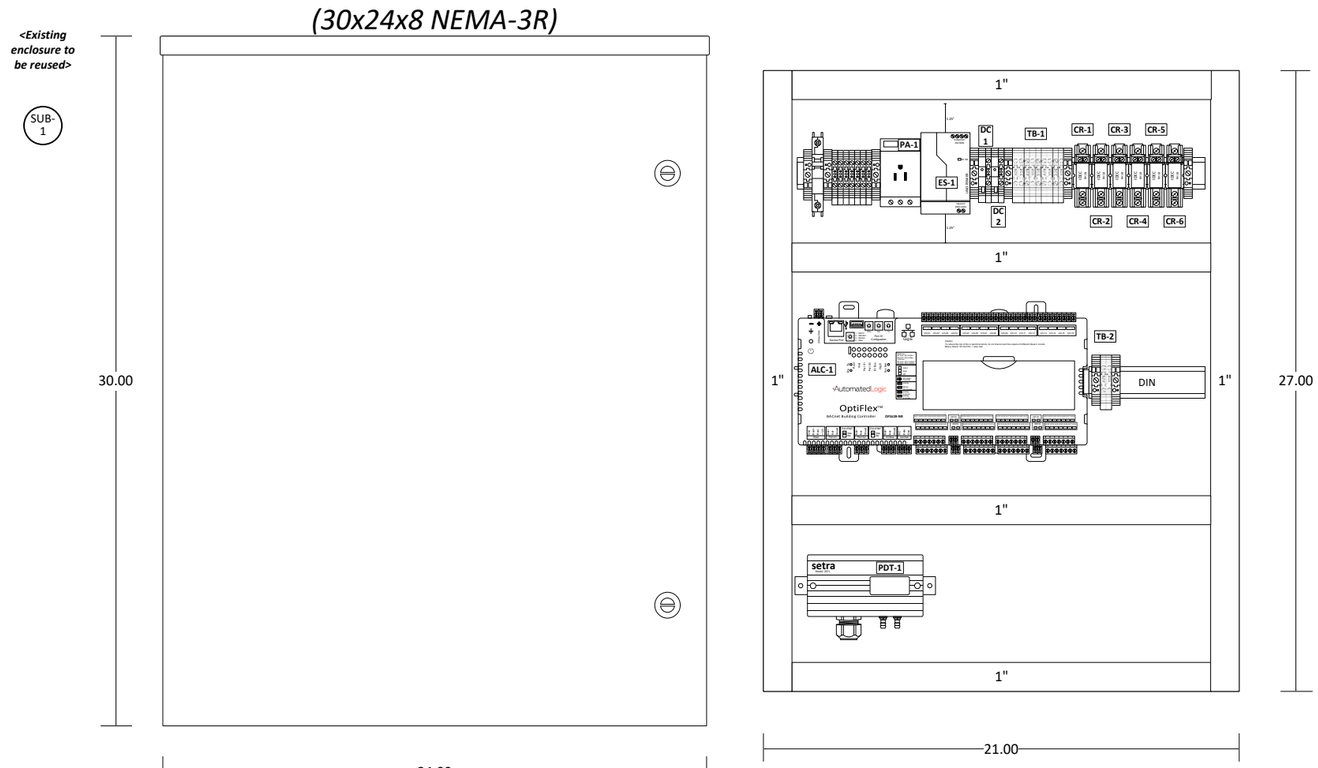

Panel Location: At EF-3

SUNBELT CONTROLS
4511 Willow Road
Suite 4
Pleasanton, CA 94588

PROJECT:
L-1201 Science Building BAS
2700 E Leland Rd.
Pittsburg, CA 94565

FILENAME: 07 - TCP-5 - EFs

REV	DESCRIPTION	DATE	BY
		0	
		0	
		0	
		0	
0	As-Built	10/11/2023	NS

DRAWING NAME:
TCP-5 Panel Layout - EF-1,2,3,4,5,8

CONTRACT NO: 80860787 | **SE:** | **DE: NS** | **PR:**

DRAWING NO.: 7.1

TCP-5 Wiring Detail (1 of 2)

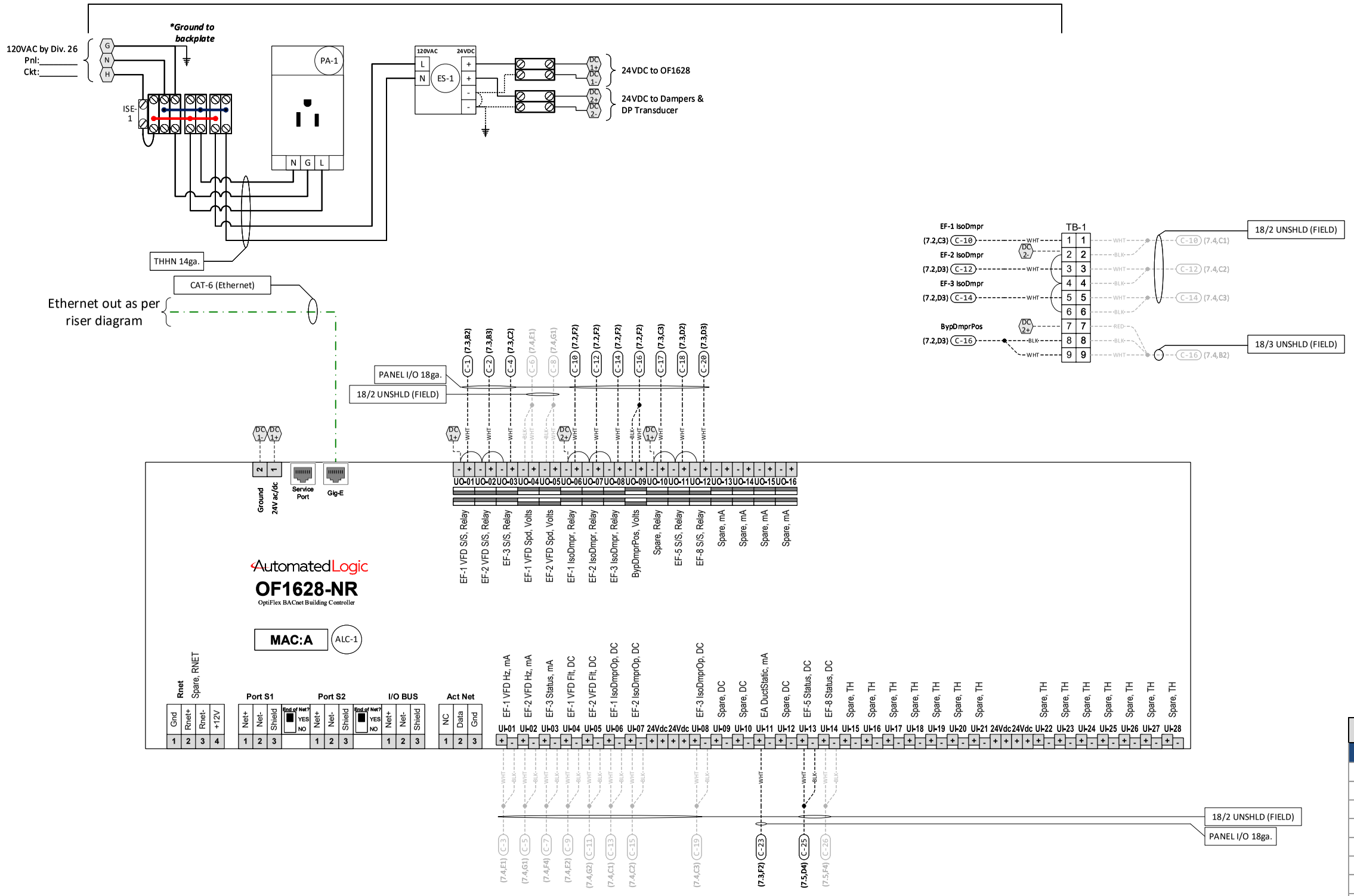

Panel continued on next page

Power Loop Schedule - VDC

Power Supply	Tag	Part Number	Watts
DC-1	ALC-1	OF1628-NR	50
DC-1	CR-1	RH1B-ULCDC24V	0.8
DC-1	CR-2	RH1B-ULCDC24V	0.8
DC-1	CR-3	RH1B-ULCDC24V	0.8
DC-1	CR-4	RH1B-ULCDC24V	0.8
DC-1	CR-5	RH1B-ULCDC24V	0.8
DC-1	CR-6	RH1B-ULCDC24V	0.8
DC-1	FCV-1	NFB24-SR	3.5
DC-1	FCV-2	NFB24-S	2.5
DC-1	FCV-3	NFB24-S	2.5
DC-1	FCV-4	NFB24-S	2.5
DC-1	PDT-1	2671-005WD-11-A1-HD	0.5
		Subtotal	66.3

SUNBELT CONTROLS
4511 Willow Road
Suite 4
Pleasanton, CA 94588

PROJECT:
L-1201 Science Building BAS
2700 E Leland Rd.
Pittsburg, CA 94565

FILENAME: 07 - TCP-5 - EFs

REV	DESCRIPTION	DATE	BY
0	As-Built	10/11/2023	NS

DRAWING NAME: TCP-5 Wiring Detail (1 of 2)

CONTRACT NO: 80860787 | SE: | DE: NS | PR:

DRAWING NO.: 7.2

TCP-5 Wiring Detail (2 of 2)

Panel continued from previous page

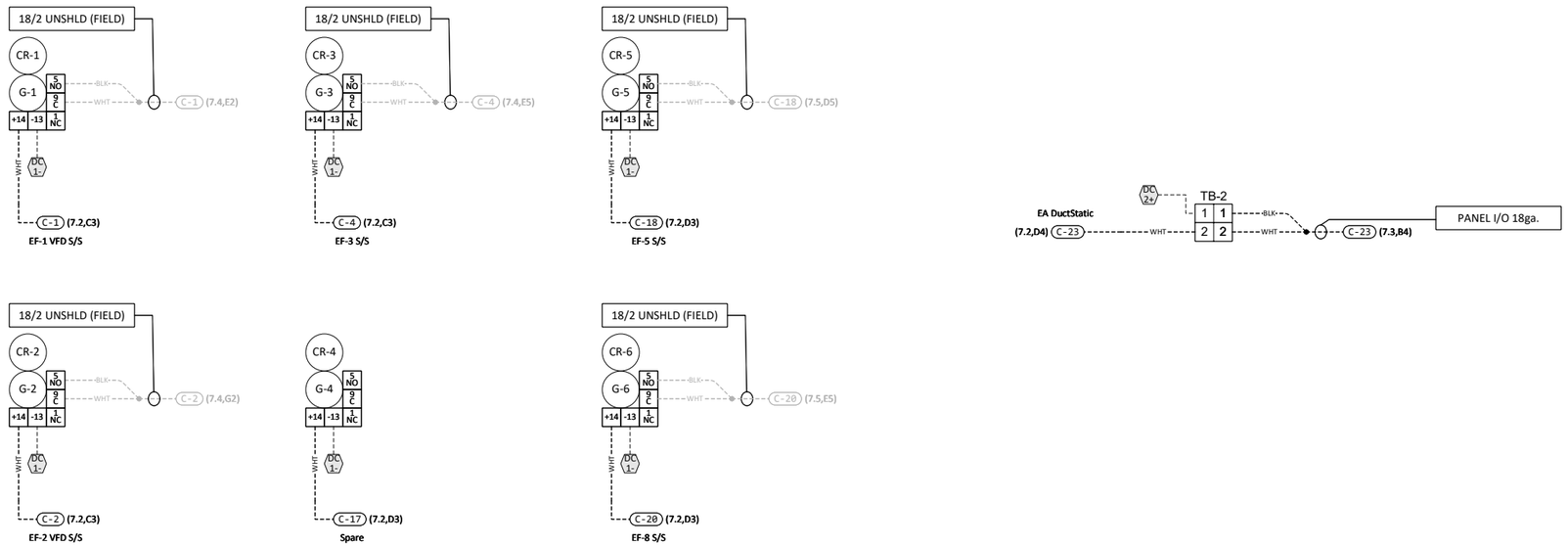

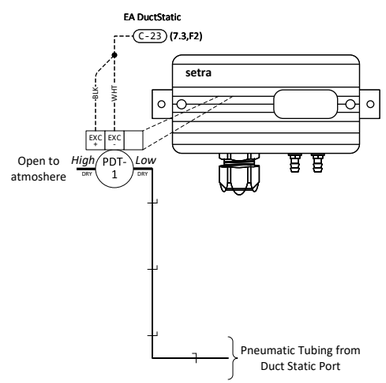

SUNBELT CONTROLS
4511 Willow Road
Suite 4
Pleasanton, CA 94588

PROJECT:
L-1201 Science Building BAS
2700 E Leland Rd.
Pittsburg, CA 94565

FILENAME: 07 - TCP-5 - EFs

REV	DESCRIPTION	DATE	BY
0	As-Built	10/11/2023	NS

DRAWING NAME: TCP-5 Wiring Detail (2 of 2)

CONTRACT NO: 80860787 | SE: | DE: NS | PR:

DRAWING NO.: 7.3

EF-1,2,3 Control Schematic

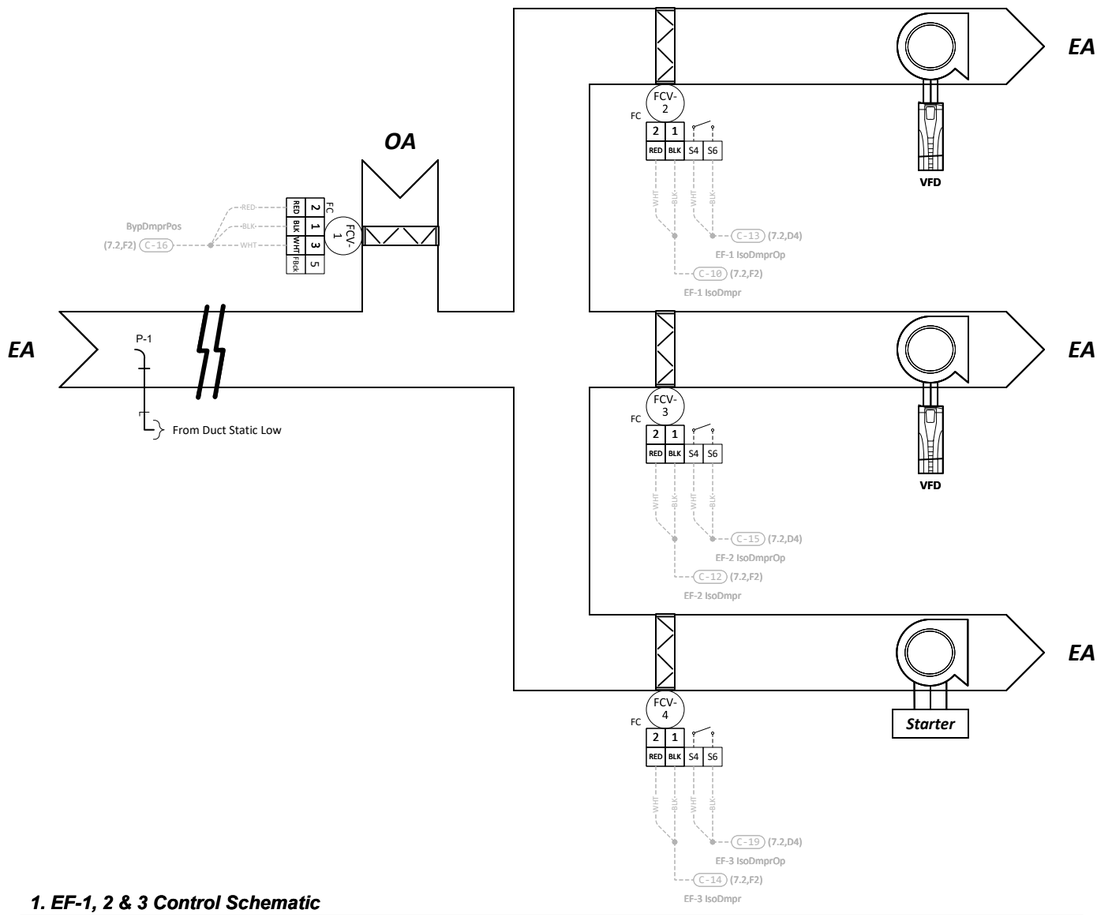

1. EF-1, 2 & 3 Control Schematic

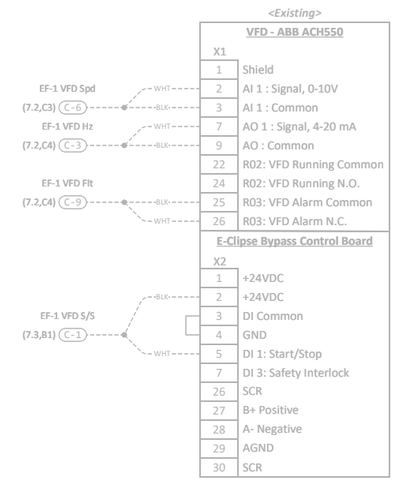

2. EF-1 VFD Wiring Schematic

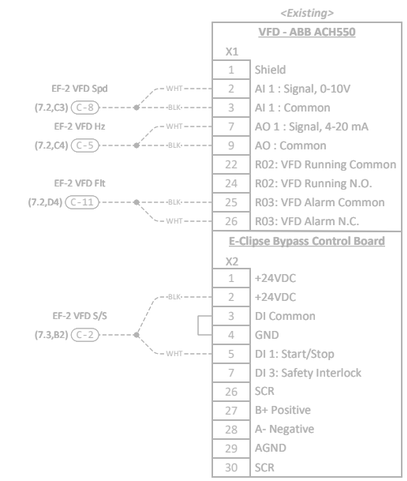

3. EF-2 VFD Wiring Schematic

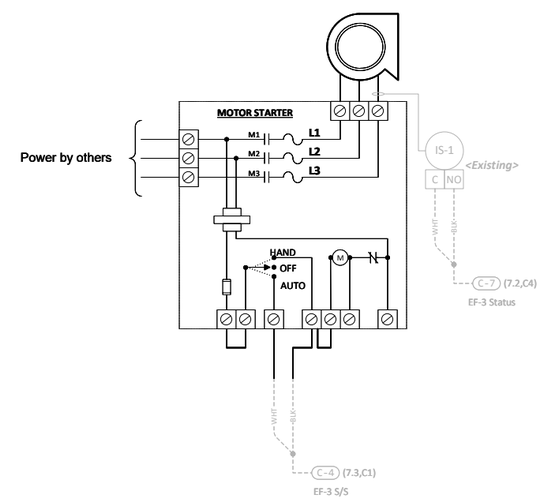

4. EF-3 Starter Wiring Schematic

SUNBELT CONTROLS
4511 Willow Road
Suite 4
Pleasanton, CA 94588

PROJECT:
L-1201 Science Building BAS
2700 E Leland Rd.
Pittsburg, CA 94565

FILENAME: 07 - TCP-5 - EFs

REV	DESCRIPTION	DATE	BY
0	As-Built	10/11/2023	NS

DRAWING NAME: EF-1,2,3 Control Schematic

CONTRACT NO: 80860787 | SE: | DE: NS | PR:

DRAWING NO.: 7.4

EF-4,5,8 Control Schematic

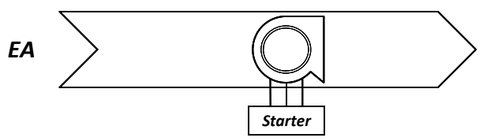

1. EF-4 Control Schematic

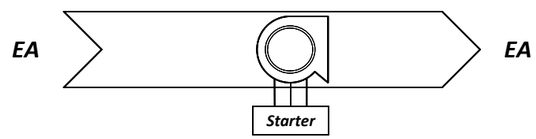

2. EF-5 Control Schematic

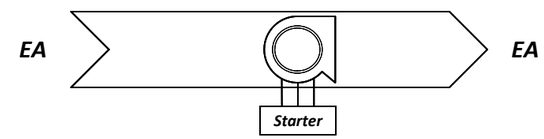

3. EF-8 Control Schematic

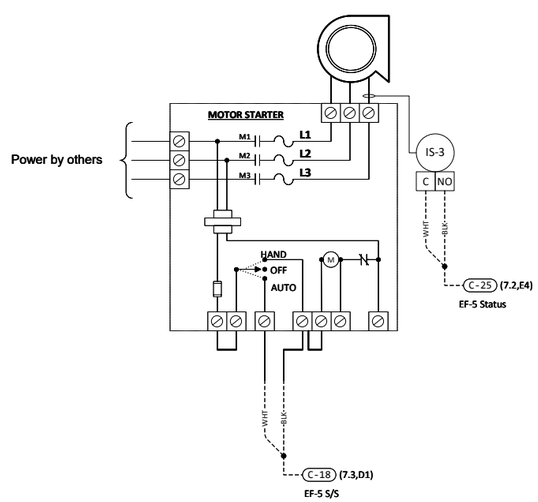

5. EF-5 Starter Wiring Schematic

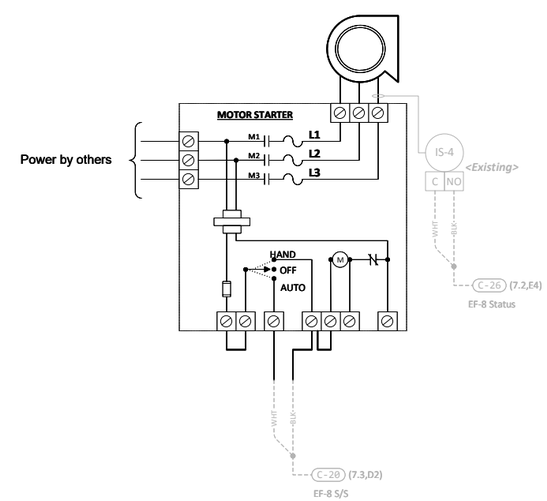

6. EF-8 Starter Wiring Schematic

SUNBELT CONTROLS
4511 Willow Road
Suite 4
Pleasanton, CA 94588

PROJECT:
L-1201 Science Building BAS
2700 E Leland Rd.
Pittsburg, CA 94565

FILENAME: 07 - TCP-5 - EFs

REV	DESCRIPTION	DATE	BY
		0	
		0	
		0	
		0	
0	As-Built	10/11/2023	NS

DRAWING NAME: EF-4,5,8 Control Schematic

CONTRACT NO: 80860787 | SE: | DE: NS | PR:

DRAWING NO.: 7.5

TCP-5 Field Parts Tag Schedule

Field Bill of Materials w/ Tags

Tag	Part Number	Product Description	Manufacturer	Panel Or Field	Quantity
FCV-1	NFB24-SR	Dmpr. Act. 90 in-lbs, Spring Return, 2-10 V, 24 VAC,	Belimo	F	1
FCV-2	NFB24-S	Dmpr. Act. 90 in-lbs, Spring Return, On/Off, 24 VAC, 2 Aux Switch	Belimo	F	1
FCV-3	NFB24-S	Dmpr. Act. 90 in-lbs, Spring Return, On/Off, 24 VAC, 2 Aux Switch	Belimo	F	1
FCV-4	NFB24-S	Dmpr. Act. 90 in-lbs, Spring Return, On/Off, 24 VAC, 2 Aux Switch	Belimo	F	1
IS-3	H608	Current Switch, Split Core, Adj. Setpoint to 0.5A, Mini	Veris	F	1
P-1	160-8	Stainless Steel Pitot Tube, 8" Insertion	Dwyer	F	1

SUNBELT CONTROLS
4511 Willow Road
Suite 4
Pleasanton, CA 94588

PROJECT:
L-1201 Science Building BAS
2700 E Leland Rd.
Pittsburg, CA 94565

FILENAME: 07 - TCP-5 - EFs

REV	DESCRIPTION	DATE	BY
0	As-Built	10/11/2023	NS

DRAWING NAME: TCP-5 Field Parts Tag Schedule

CONTRACT NO: 80860787 | SE: | DE: NS | PR:

DRAWING NO.: 7.6

TCP-6 Panel Layout - Lab 235

Panel Bill of Materials w/ Tags

Tag	Part Number	Product Description	Manufacturer	Panel Or Field	Quantity
ALC-1	OF1628	BACnet Building Controller, 16 UO, 28 UI	Automated Logic	P	1
ALC-2	FIO012u	I/O Expander, 12 UI	Automated Logic	P	1
ALC-3	FIO012u	I/O Expander, 12 UI	Automated Logic	P	1
ALC-4	FIO012u	I/O Expander, 12 UI	Automated Logic	P	1
ALC-5	FIO012u	I/O Expander, 12 UI	Automated Logic	P	1
ENC-1	SCE-36N3006LP	Saginaw Hinge Cover Enclosure, NEMA 1, 36x30x6	Saginaw	P	1
ES-1	2902994	120-240VAC to 24VDC Power Supply, 90W, 3.75A, DIN	Phoenix Contact	P	1
ES-2	2902994	120-240VAC to 24VDC Power Supply, 90W, 3.75A, DIN	Phoenix Contact	P	1
ISE-1	QL-10	Circuit Breaker, 120/240VAC, Din rail mount, 10A	Kele	P	1
PA-1	SCE-DLKLDB	1/4 Turn Keylock Door Latch, Black Finish	Saginaw	P	1
PA-2	804155	120VAC Single Receptacle, DIN Mount	Phoenix Contact	P	1
SUB-1	SCE-36N30MP	Saginaw Sub-panel, Solid, NEMA 1, 36x30	Saginaw	P	1

TCP-6

(36x30x6 NEMA-1)

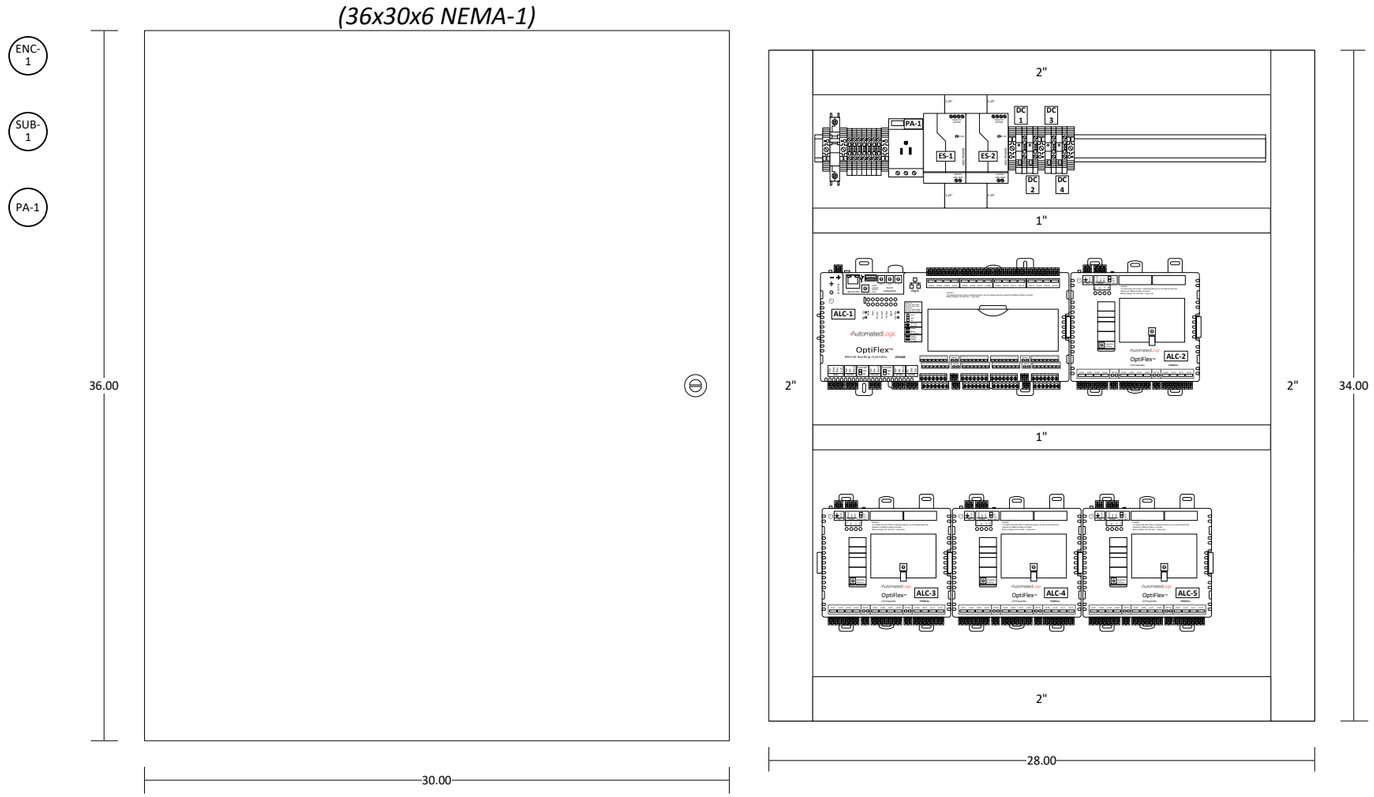

Panel Location: In Lab

SUNBELT CONTROLS
4511 Willow Road
Suite 4
Pleasanton, CA 94588

PROJECT:
L-1201 Science Building BAS
2700 E Leland Rd.
Pittsburg, CA 94565

FILENAME: 08 - TCP-6 - Lab Zones 235

REV	DESCRIPTION	DATE	BY
0	As-Built	10/11/2023	NS

DRAWING NAME: TCP-6 Panel Layout - Lab 235

CONTRACT NO: 80860787 | SE: | DE: NS | PR:

DRAWING NO.: 8.1

TCP-6 Wiring Detail (1 of 2)

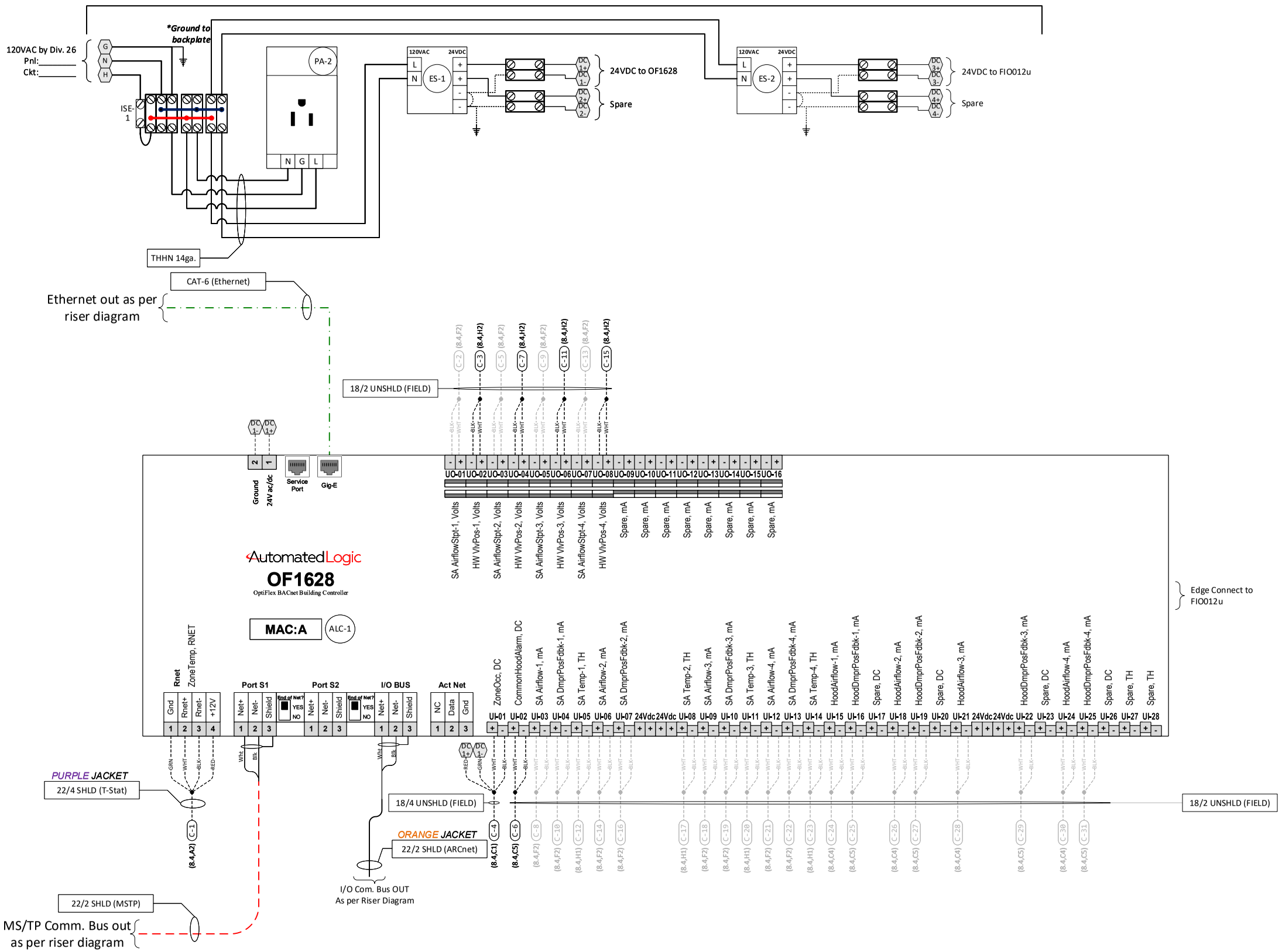

Panel continued on next page

Power Loop Schedule - VDC

Power Supply	Tag	Part Number	Watts
DC-1	ALC-1	OF1628	50
DC-1	ALC-2	FIO012u	12
DC-1	YKS-1	DT-300	1
DC-1	YKS-2	DT-300	1
		Subtotal	64
DC-2	ALC-3	FIO012u	12
DC-2	ALC-4	FIO012u	12
DC-2	ALC-5	FIO012u	12
		Subtotal	36

SUNBELT CONTROLS
4511 Willow Road
Suite 4
Pleasanton, CA 94588

PROJECT:
L-1201 Science Building BAS
2700 E Leland Rd.
Pittsburg, CA 94565

FILENAME: 08 - TCP-6 - Lab Zones 235

REV	DESCRIPTION	DATE	BY
0	As-Built	10/11/2023	NS

DRAWING NAME: TCP-6 Wiring Detail (1 of 2)

CONTRACT NO: 80860787 | SE: | DE: NS | PR:

DRAWING NO.: 8.2

TCP-6 Wiring Detail (2 of 2)

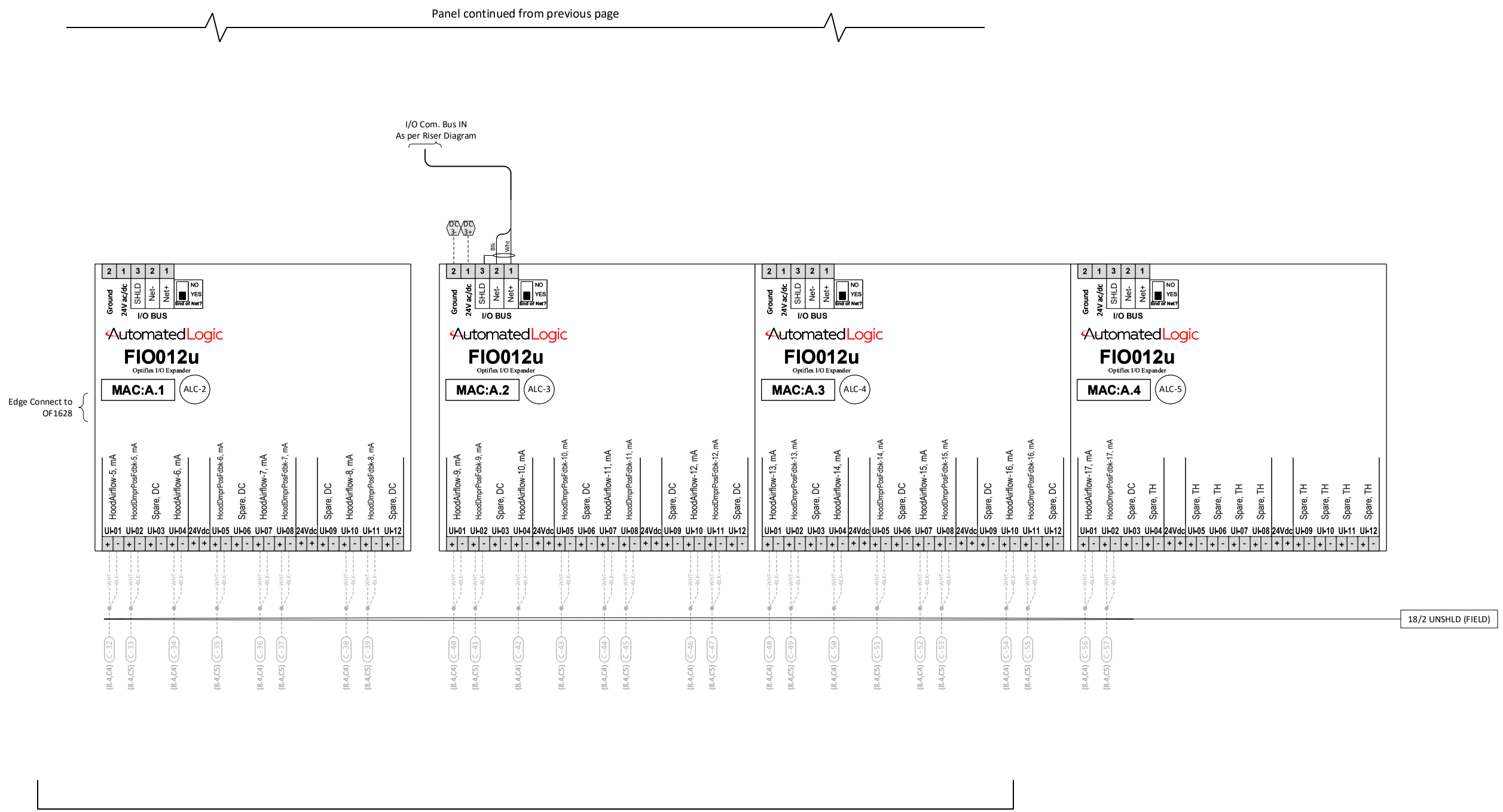

SUNBELT CONTROLS
4511 Willow Road
Suite 4
Pleasanton, CA 94588

PROJECT:
L-1201 Science Building BAS
2700 E Leland Rd.
Pittsburg, CA 94565

FILENAME: 08 - TCP-6 - Lab Zones 235

REV	DESCRIPTION	DATE	BY
		0	
		0	
		0	
		0	
0	As-Built	10/11/2023	NS

DRAWING NAME: TCP-6 Wiring Detail (2 of 2)

CONTRACT NO: 80860787 | SE: | DE: NS | PR:

DRAWING NO.: 8.3

Lab 235 Control Schematic

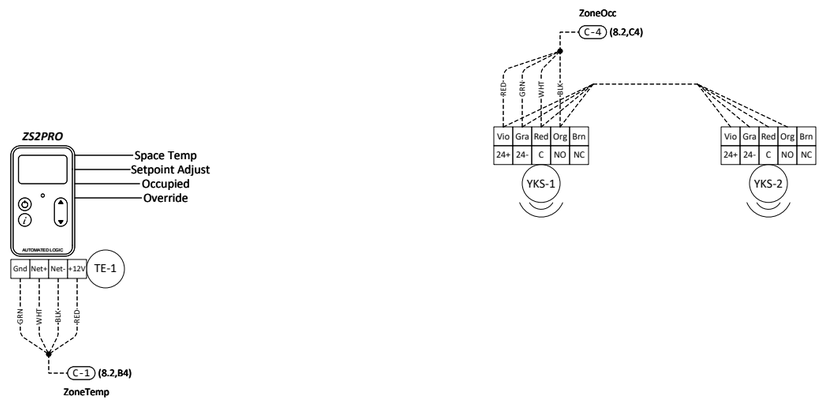

1. Zone Temperature & Occupancy Control Schematic

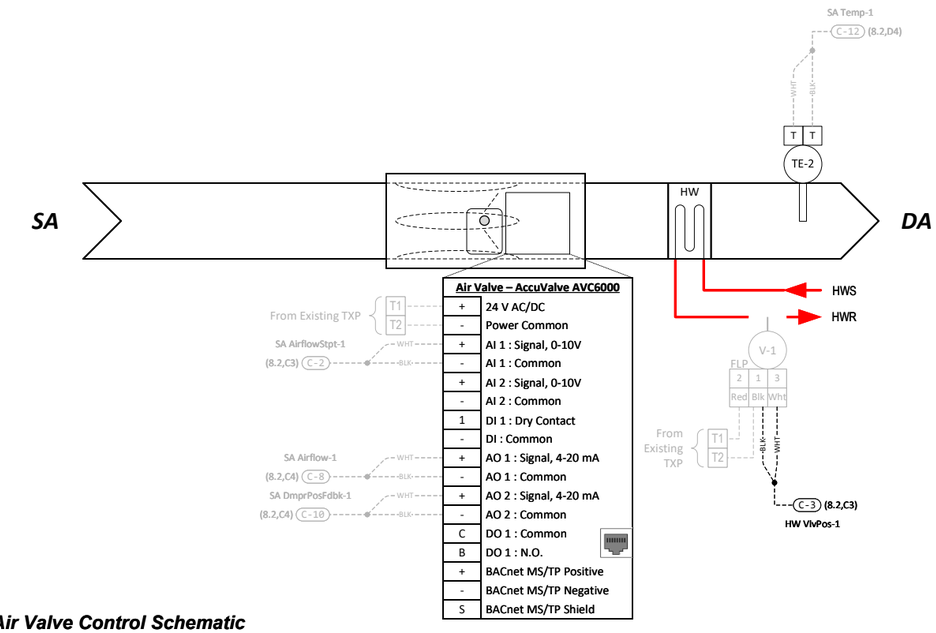

2. Supply Air Valve Control Schematic

Typical of 4

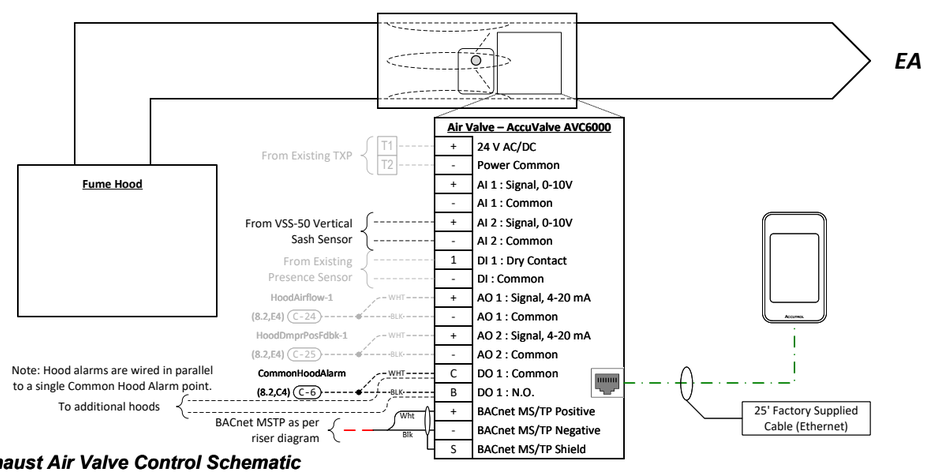

3. Hood Exhaust Air Valve Control Schematic

Typical of 17

SUNBELT CONTROLS
4511 Willow Road
Suite 4
Pleasanton, CA 94588

PROJECT:
L-1201 Science Building BAS
2700 E Leland Rd.
Pittsburg, CA 94565

FILENAME: 08 - TCP-6 - Lab Zones 235

REV	DESCRIPTION	DATE	BY
0	As-Built	10/11/2023	NS

DRAWING NAME: Lab 235 Control Schematic

CONTRACT NO: 80860787 | SE: | DE: NS | PR:

DRAWING NO.: 8.4

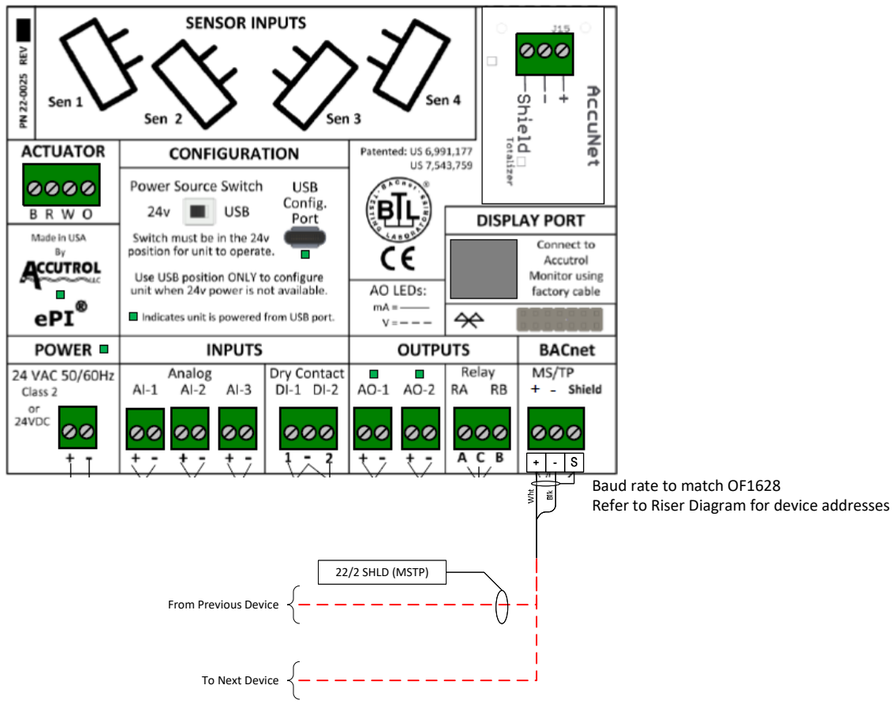

AVC6000 BACnet Points List

Name	Value	Type	Offset / Polarity	Exp:Num	I/O Type
AccuNet Totalized Airflow Volume	0.0 %	BAV			
Airflow Volume	306.86 cfm	BAV			
Airflow Volume Range Maximum Limit	800.0 V	BAV			
Airflow Volume Setpoint to Control Loop	300.0 %	BAV			
Analog Airflow Volume Setpoint	1.94 %	BAV			
BACnet Airflow Volume Setpoint	0.0 V	BAV			
Face Velocity	169.22 ft/min	BAV			
Face Velocity Setpoint	103.0 ft/min	BAV			
Flash Writes Remaining	9993.0 %	BAV			
OA Dew Point	39.11 °F	BAV			
OA Enthalpy	21.48 Btu/lb	BAV			
Valve Position Feedback	41.24 %	BAV			
AccuNet Status	Disabled	BMSV			
Airflow Volume Units	CFM	BMSV			
Face Velocity Units	FPM	BMSV			
Mode Selector	Fume Hood	BMSV			
COMM_ERR	Off	BALM			
GEN_ALARM	Normal	BALM			
LOW_FACE_VEL_ALARM	Normal	BALM			
LOW_VOL_ALARM	Normal	BALM			
Maintenance Mode	Off	BALM			
PURGE_ALARM	Normal	BALM			
READ_ERROR	Normal	BALM			
SASH_POS_ALARM	Normal	BALM			

TCP-6 Field Parts Tag Schedule

Field Bill of Materials w/ Tags

Tag	Part Number	Product Description	Manufacturer	Panel Or Field	Quantity
TE-1	ZS2P-ALC	ZS2 Pro Space Temp Sensor w/LCD, Rnet, SP Adj, Ovrd	Automated Logic	F	1
TE-2	NSB-10K-2-D-8-BB2-A	Duct, 8" Insertion, BB2 NEMA 4X	Automated Logic	F	4
V-1	Existing Valve	Existing Valve	Existing Valve	F	4
YKS-1	DT-300	PIR/Ultrasonic Ceiling Occupancy Sensor, 24 VAC/VDC, Light Level, Isolated Relay	Watt Stopper	F	1
YKS-2	DT-300	PIR/Ultrasonic Ceiling Occupancy Sensor, 24 VAC/VDC, Light Level, Isolated Relay	Watt Stopper	F	1

SUNBELT CONTROLS
4511 Willow Road
Suite 4
Pleasanton, CA 94588

PROJECT:
L-1201 Science Building BAS
2700 E Leland Rd.
Pittsburg, CA 94565

FILENAME: 08 - TCP-6 - Lab Zones 235

REV	DESCRIPTION	DATE	BY
		0	
		0	
		0	
		0	
0	As-Built	10/11/2023	NS

DRAWING NAME:
TCP-6 Field Parts Tag Schedule

CONTRACT NO: 80860787 | SE: | DE: NS | PR:

DRAWING NO.: 8.6

TCP-7 Panel Layout - Lab 234

Panel Bill of Materials w/ Tags

Tag	Part Number	Product Description	Manufacturer	Panel Or Field	Quantity
ALC-1	OF1628	BACnet Building Controller, 16 UO, 28 UI	Automated Logic	P	1
ENC-1	SCE-24N2406LP	Saginaw Hinge Cover Enclosure, NEMA 1, 24x24x6	Saginaw	P	1
ES-1	2902994	120-240VAC to 24VDC Power Supply, 90W, 3.75A, DIN	Phoenix Contact	P	1
ISE-1	QL-10	Circuit Breaker, 120/240VAC, Din rail mount, 10A	Kele	P	1
PA-1	SCE-DLKLDB	1/4 Turn Keylock Door Latch, Black Finish	Saginaw	P	1
PA-2	804155	120VAC Single Receptacle, DIN Mount	Phoenix Contact	P	1
SUB-1	SCE-24N24MP	Saginaw Sub-panel, Solid, NEMA 1, 24x24	Saginaw	P	1

TCP-7

(24x24x6 NEMA-1)

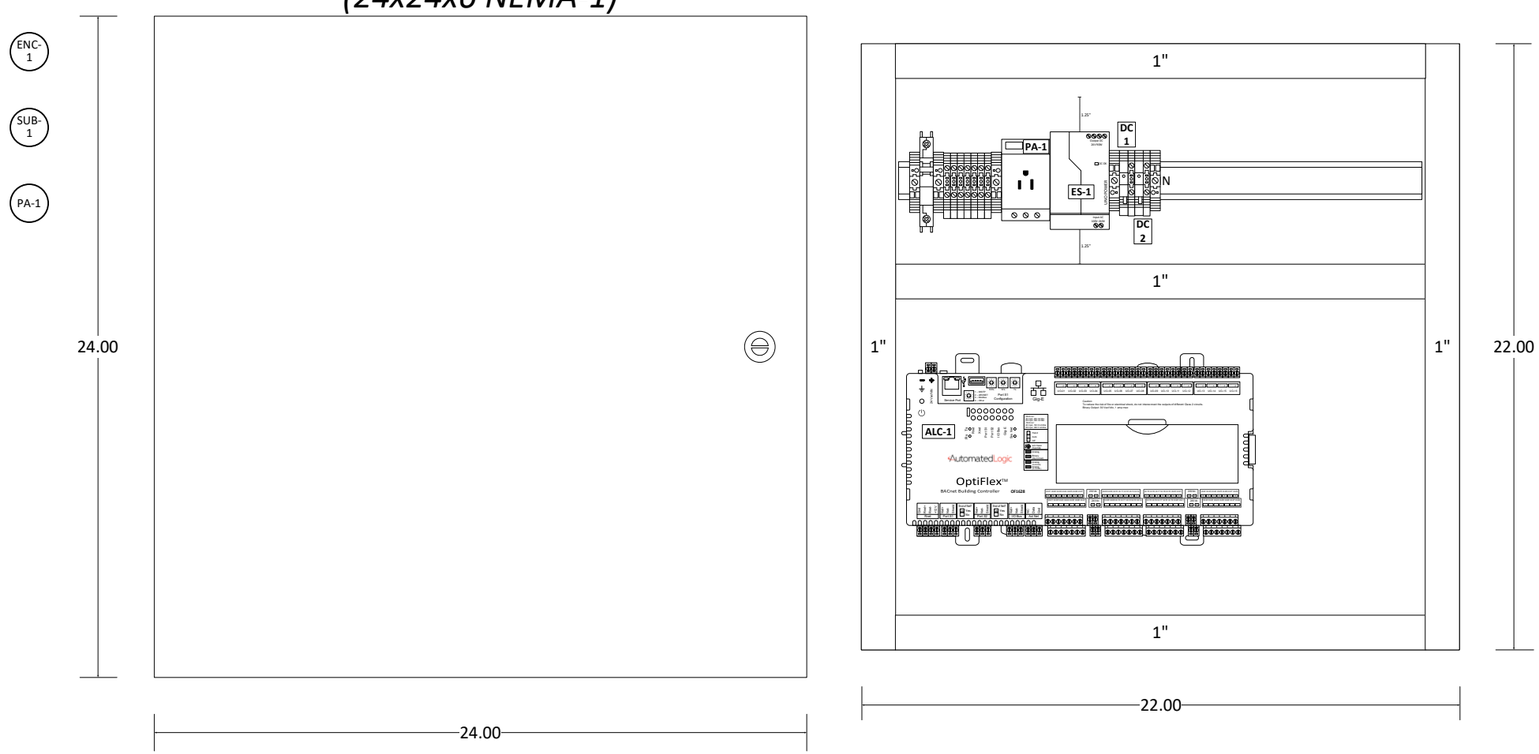

Panel Location: In Lab

SUNBELT CONTROLS
4511 Willow Road
Suite 4
Pleasanton, CA 94588

PROJECT:
L-1201 Science Building BAS
2700 E Leland Rd.
Pittsburg, CA 94565

FILENAME: 09 - TCP-7 - Lab Zones 234

REV	DESCRIPTION	DATE	BY
		0	
		0	
		0	
		0	
0	As-Built	10/11/2023	NS

DRAWING NAME: TCP-7 Panel Layout - Lab 234

CONTRACT NO: 80860787 | SE: | DE: NS | PR:

DRAWING NO.: 9.1

TCP-7 Wiring Detail

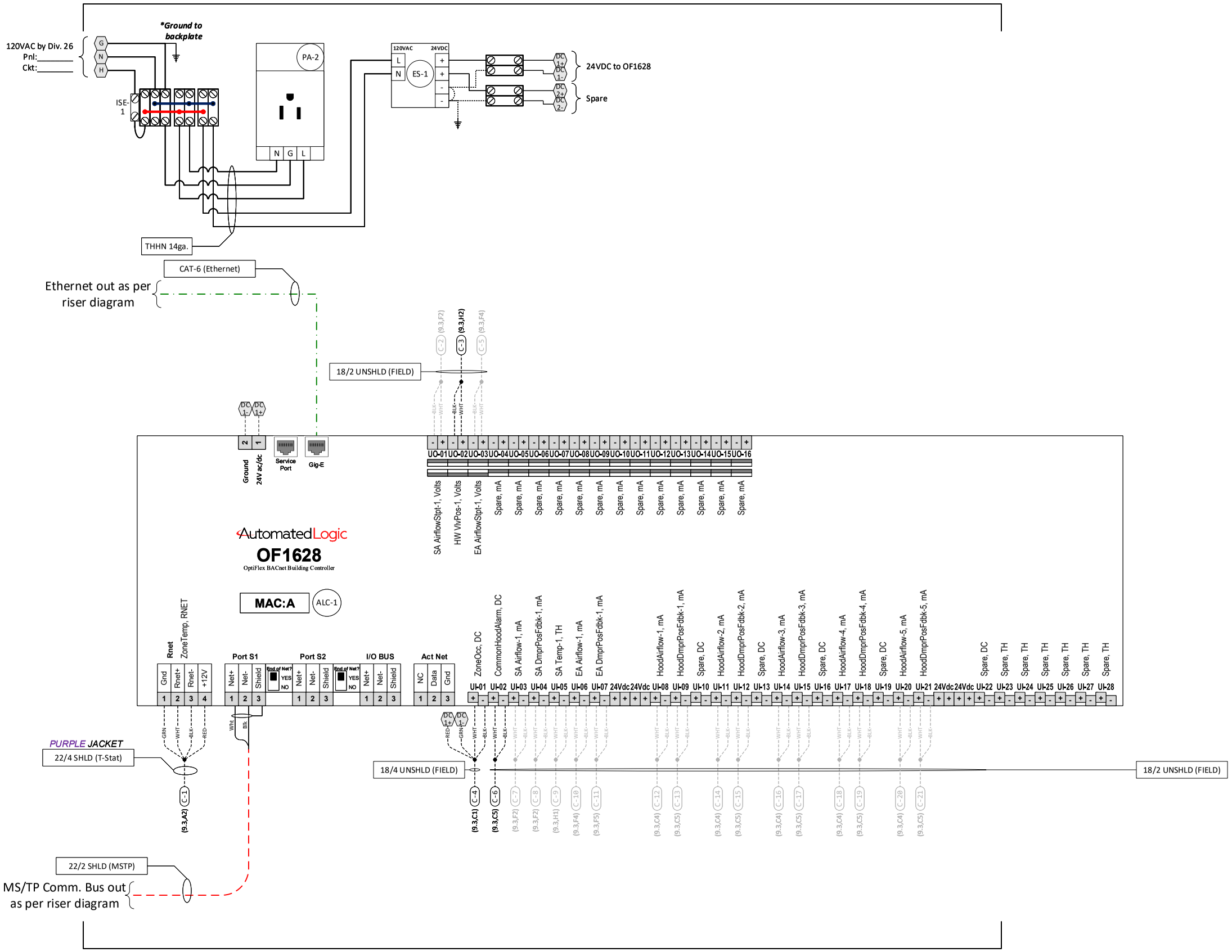

Power Loop Schedule - VDC

Power Supply	Tag	Part Number	Watts
DC-1	ALC-1	OF1628	50
DC-1	YKS-1	DT-300	1
DC-1	YKS-2	DT-300	1
		Subtotal	52

SUNBELT CONTROLS
4511 Willow Road
Suite 4
Pleasanton, CA 94588

PROJECT:
L-1201 Science Building BAS
2700 E Leland Rd.
Pittsburg, CA 94565

FILENAME: 09 - TCP-7 - Lab Zones 234

REV	DESCRIPTION	DATE	BY
0	As-Built	10/11/2023	NS

DRAWING NAME: TCP-7 Wiring Detail

CONTRACT NO: 80860787 | SE: | DE: NS | PR:

DRAWING NO.: 9.2

Lab 234 Control Schematic

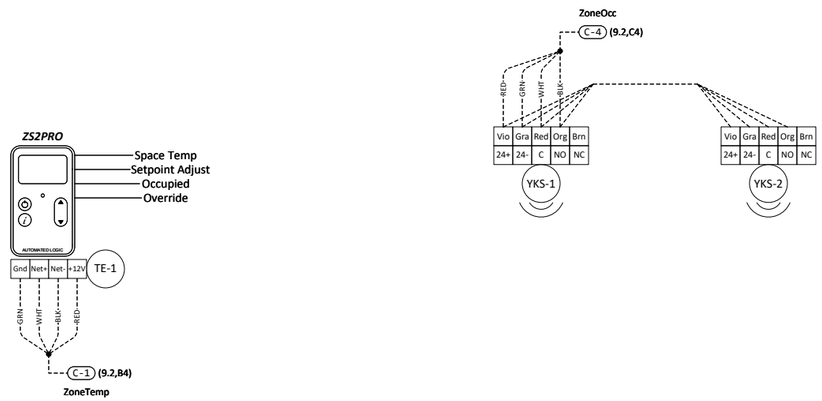

1. Zone Temperature & Occupancy Control Schematic

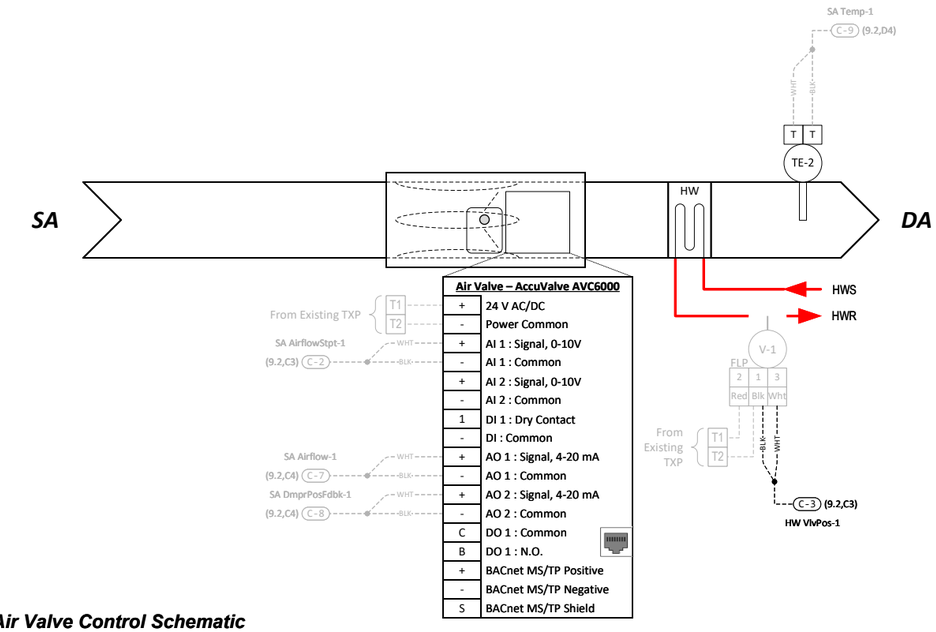

2. Supply Air Valve Control Schematic

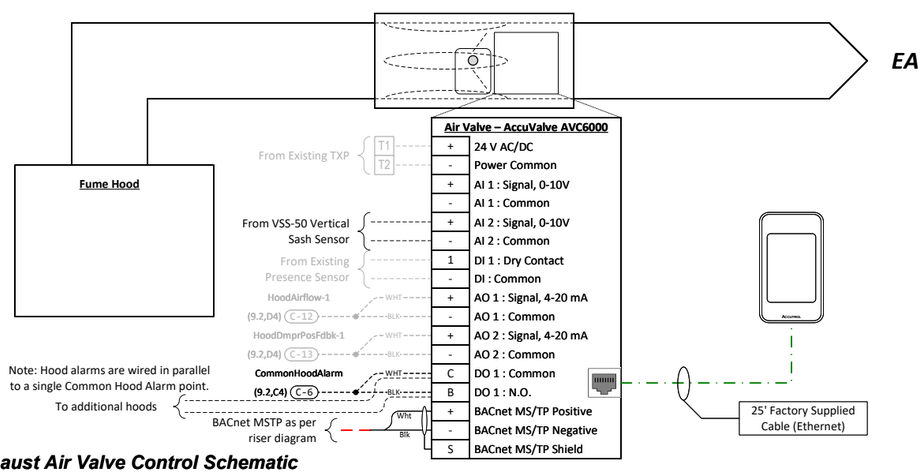

3. Hood Exhaust Air Valve Control Schematic

Typical of 5

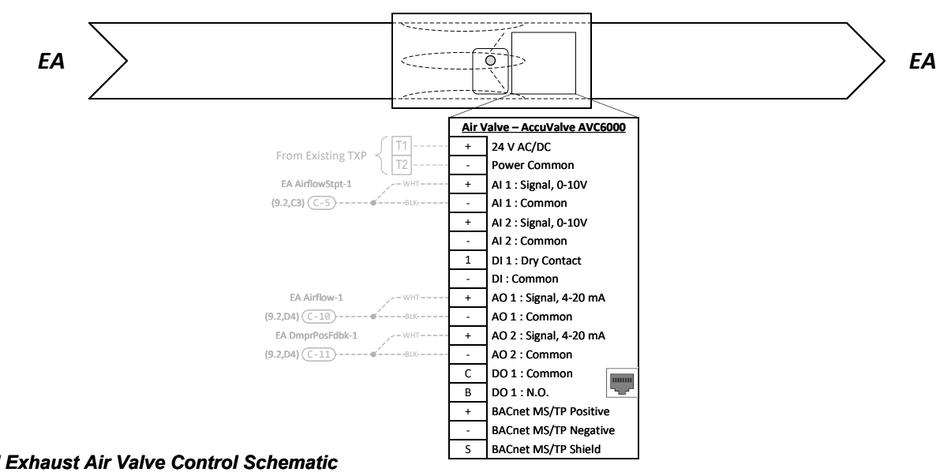

4. General Exhaust Air Valve Control Schematic

SUNBELT CONTROLS
4511 Willow Road
Suite 4
Pleasanton, CA 94588

PROJECT:
L-1201 Science Building BAS
2700 E Leland Rd.
Pittsburg, CA 94565

FILENAME: 09 - TCP-7 - Lab Zones 234

REV	DESCRIPTION	DATE	BY
		0	
		0	
		0	
		0	
0	As-Built	10/11/2023	NS

DRAWING NAME: Lab 234 Control Schematic

CONTRACT NO: 80860787 | SE: | DE: NS | PR:

DRAWING NO.: 9.3

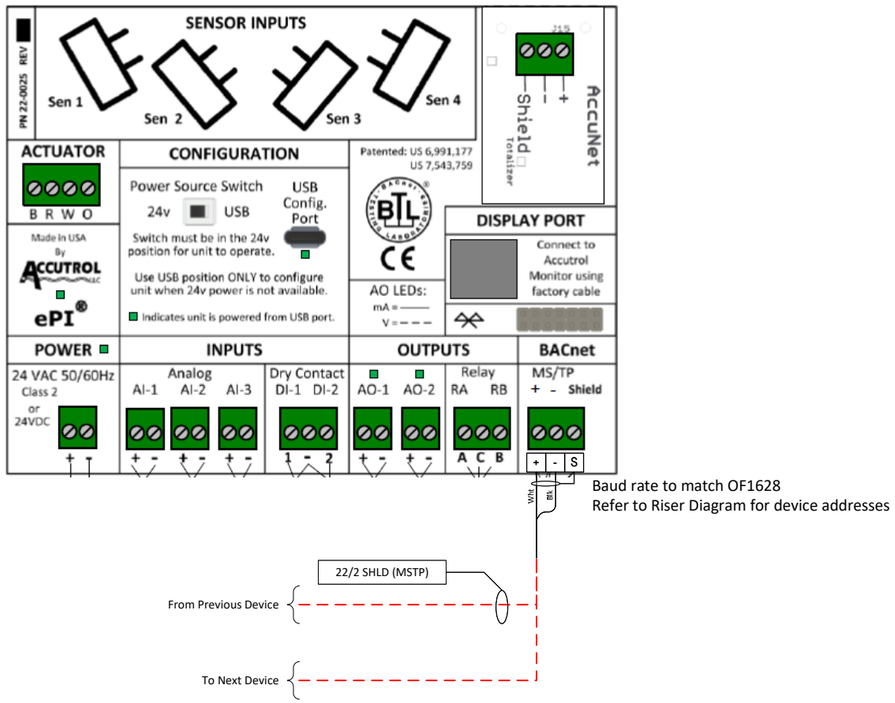

AVC6000 BACnet Points List

Name	Value	Type	Offset / Polarity	Exp:Num	I/O Type
AccuNet Totalized Airflow Volume	0.0 %	BAV			
Airflow Volume	306.86 cfm	BAV			
Airflow Volume Range Maximum Limit	800.0 V	BAV			
Airflow Volume Setpoint to Control Loop	300.0 %	BAV			
Analog Airflow Volume Setpoint	1.94 %	BAV			
BACnet Airflow Volume Setpoint	0.0 V	BAV			
Face Velocity	169.22 ft/min	BAV			
Face Velocity Setpoint	103.0 ft/min	BAV			
Flash Writes Remaining	9993.0 %	BAV			
OA Dew Point	39.11 °F	BAV			
OA Enthalpy	21.48 Btu/lb	BAV			
Valve Position Feedback	41.24 %	BAV			
AccuNet Status	Disabled	BMSV			
Airflow Volume Units	CFM	BMSV			
Face Velocity Units	FPM	BMSV			
Mode Selector	Fume Hood	BMSV			
COMM_ERR	Off	BALM			
GEN_ALARM	Normal	BALM			
LOW_FACE_VEL_ALARM	Normal	BALM			
LOW_VOL_ALARM	Normal	BALM			
Maintenance Mode	Off	BALM			
PURGE_ALARM	Normal	BALM			
READ_ERROR	Normal	BALM			
SASH_POS_ALARM	Normal	BALM			

TCP-7 Field Parts Tag Schedule

Field Bill of Materials w/ Tags

Tag	Part Number	Product Description	Manufacturer	Panel Or Field	Quantity
TE-1	ZS2P-ALC	ZS2 Pro Space Temp Sensor w/LCD, Rnet, SP Adj, Ovrd	Automated Logic	F	1
TE-2	NSB-10K-2-D-8-BB2-A	Duct, 8" Insertion, BB2 NEMA 4X	Automated Logic	F	1
V-1	Existing Valve	Existing Valve	Existing Valve	F	1
YKS-1	DT-300	PIR/Ultrasonic Ceiling Occupancy Sensor, 24 VAC/VDC, Light Level, Isolated Relay	Watt Stopper	F	1
YKS-2	DT-300	PIR/Ultrasonic Ceiling Occupancy Sensor, 24 VAC/VDC, Light Level, Isolated Relay	Watt Stopper	F	1

SUNBELT CONTROLS
4511 Willow Road
Suite 4
Pleasanton, CA 94588

PROJECT:
L-1201 Science Building BAS
2700 E Leland Rd.
Pittsburg, CA 94565

FILENAME: 09 - TCP-7 - Lab Zones 234

REV	DESCRIPTION	DATE	BY
		0	
		0	
		0	
		0	
0	As-Built	10/11/2023	NS

DRAWING NAME:
TCP-7 Field Parts Tag Schedule

CONTRACT NO: 80860787 | SE: | DE: NS | PR:

DRAWING NO.: 9.5

TCP-8/9 Panel Layout - Lab 237/128

Typical of 2

TCP #	Equipment
TCP-8	Lab 237
TCP-9	Lab 128

Panel Bill of Materials w/ Tags

Tag	Part Number	Product Description	Manufacturer	Panel Or Field	Quantity
ALC-1	OF1628-NR	BACnet Building Controller (Non-Routing), 16 UO, 28 UI	Automated Logic	P	2
ENC-1	SCE-24N2406LP	Saginaw Hinge Cover Enclosure, NEMA 1, 24x24x6	Saginaw	P	2
ES-1	2902994	120-240VAC to 24VDC Power Supply, 90W, 3.75A, DIN	Phoenix Contact	P	2
ISE-1	QL-10	Circuit Breaker, 120/240VAC, Din rail mount, 10A	Kele	P	2
PA-1	SCE-DLKLDB	1/4 Turn Keylock Door Latch, Black Finish	Saginaw	P	2
PA-2	804155	120VAC Single Receptacle, DIN Mount	Phoenix Contact	P	2
SUB-1	SCE-24N24MP	Saginaw Sub-panel, Solid, NEMA 1, 24x24	Saginaw	P	2

TCP-8/9

(24x24x6 NEMA-1)

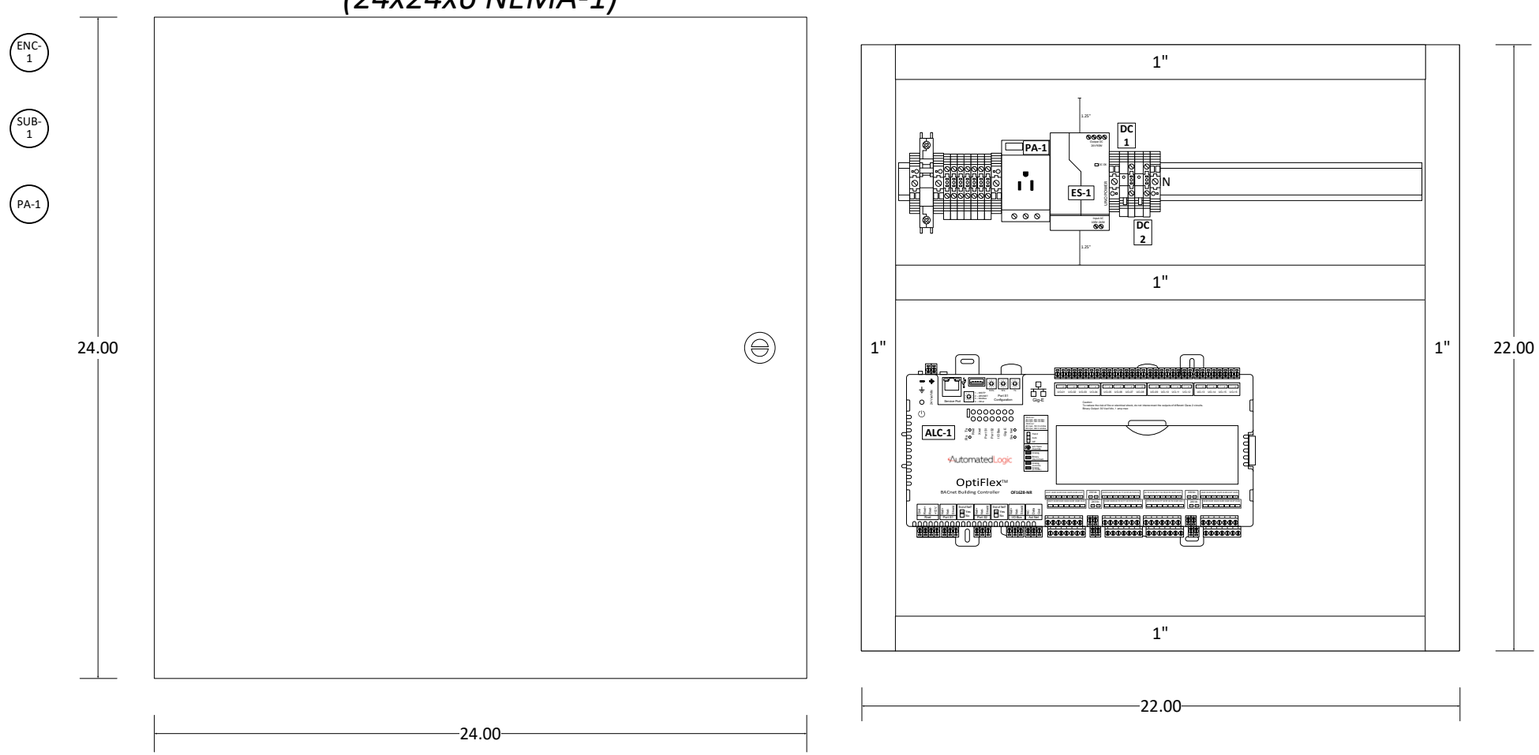

Panel Location: In Lab

SUNBELT CONTROLS
4511 Willow Road
Suite 4
Pleasanton, CA 94588

PROJECT:
L-1201 Science Building BAS
2700 E Leland Rd.
Pittsburg, CA 94565

FILENAME: 10 - TCP-8_9 - Lab Zones 237_128

REV	DESCRIPTION	DATE	BY
		0	
		0	
		0	
		0	
0	As-Built	10/11/2023	NS

DRAWING NAME:
TCP-8/9 Panel Layout - Lab 237/128

CONTRACT NO: 80860787 | SE: | DE: NS | PR:

DRAWING NO.: 10.1

TCP-8/9 Wiring Detail
Typical of 2

TCP #	Equipment
TCP-8	Lab 237
TCP-9	Lab 128

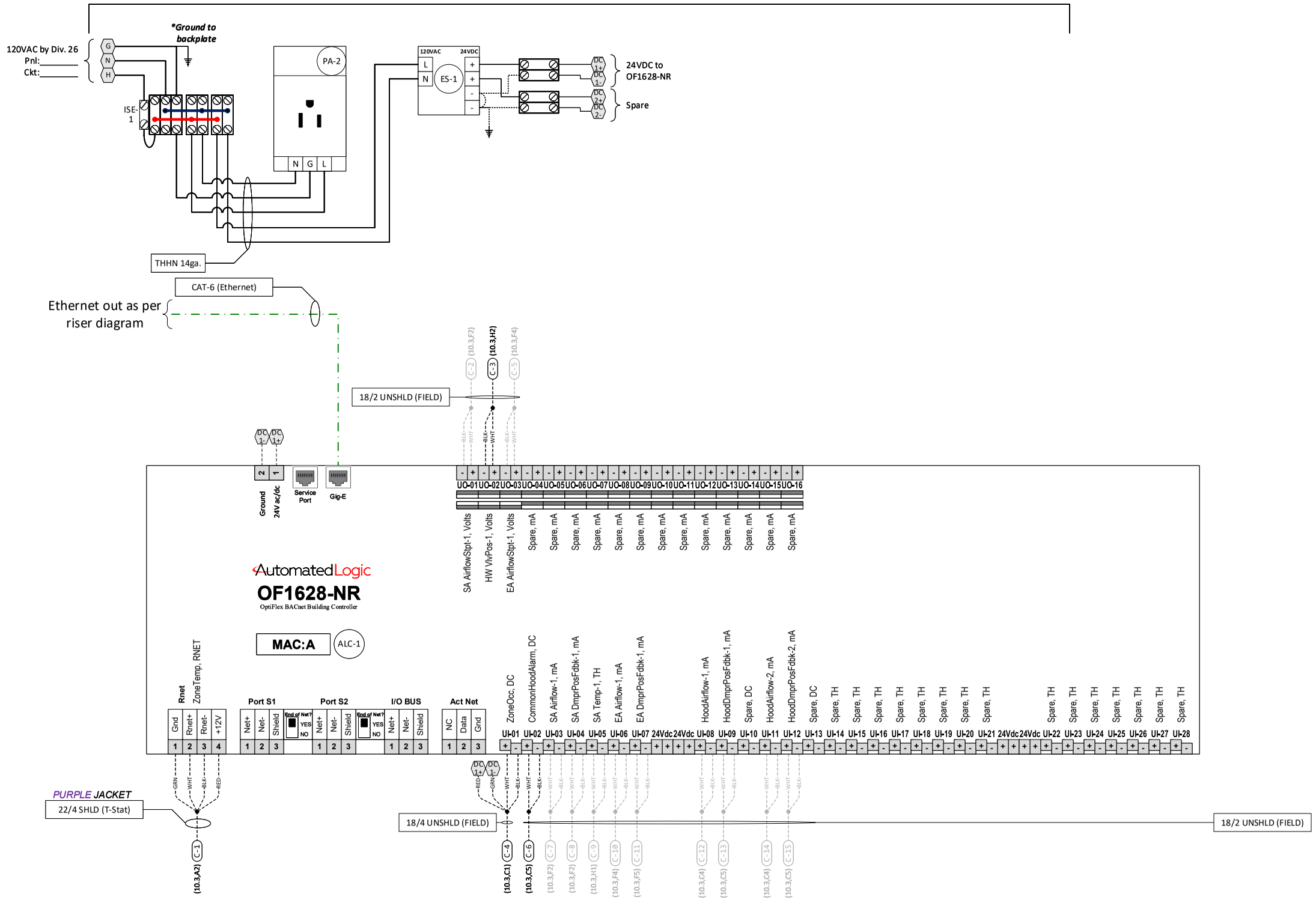

Power Loop Schedule - VDC

Power Supply	Tag	Part Number	Watts
DC-1	ALC-1	OF1628-NR	50
DC-1	YKS-1	DT-300	1
		Subtotal	51

SUNBELT CONTROLS
4511 Willow Road
Suite 4
Pleasanton, CA 94588

PROJECT:
L-1201 Science Building BAS
2700 E Leland Rd.
Pittsburg, CA 94565

FILENAME: 10 - TCP-8_9 - Lab Zones 237_128

REV	DESCRIPTION	DATE	BY
0	As-Built	10/11/2023	NS

DRAWING NAME: TCP-8/9 Wiring Detail
CONTRACT NO: 80860787 | SE: | DE: NS | PR:
DRAWING NO.: 10.2

Lab 237/128 Control Schematic
Typical of 2

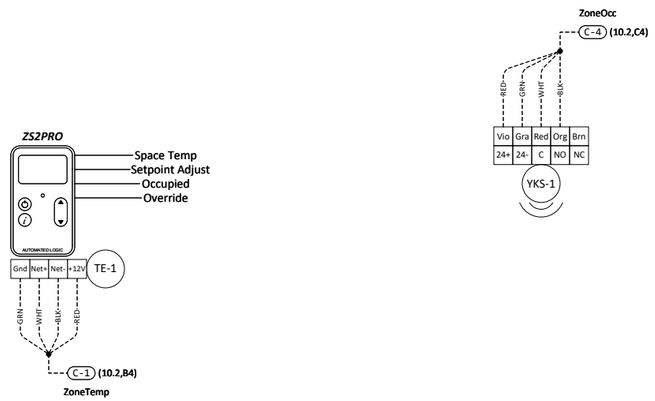

1. Zone Temperature & Occupancy Control Schematic

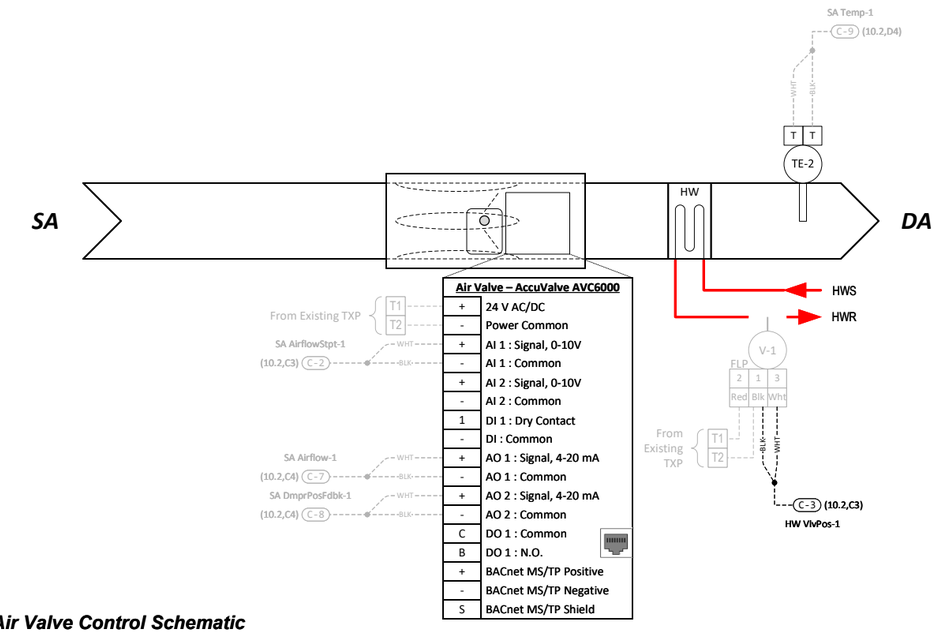

2. Supply Air Valve Control Schematic

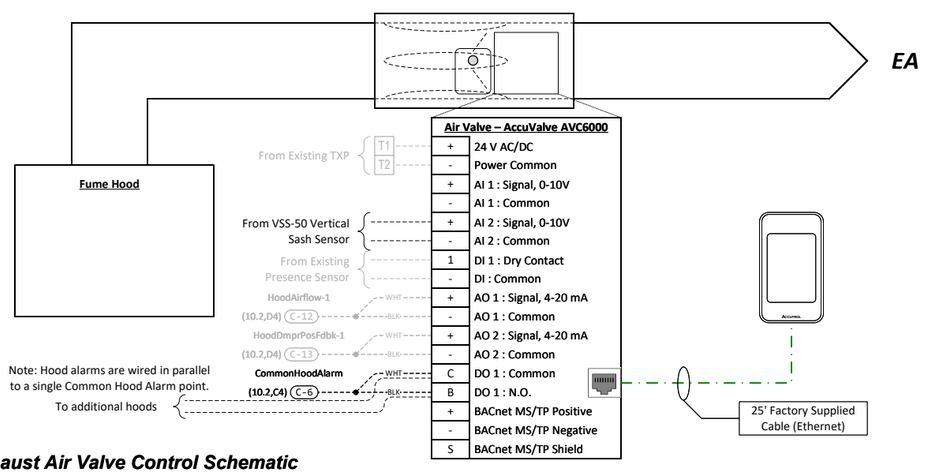

3. Hood Exhaust Air Valve Control Schematic

Typical of 2

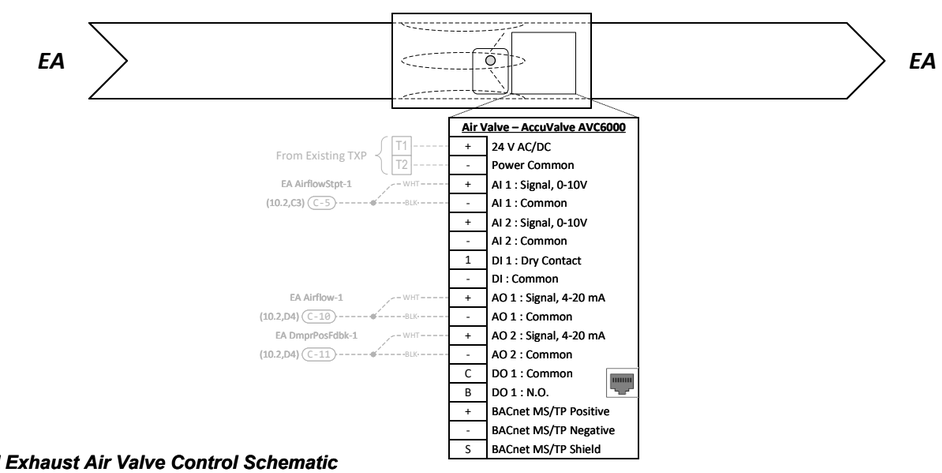

4. General Exhaust Air Valve Control Schematic

SUNBELT CONTROLS
4511 Willow Road
Suite 4
Pleasanton, CA 94588

PROJECT:
L-1201 Science Building BAS
2700 E Leland Rd.
Pittsburg, CA 94565

FILENAME: 10 - TCP-8_9 - Lab Zones 237_128

REV	DESCRIPTION	DATE	BY
0	As-Built	10/11/2023	NS

DRAWING NAME: Lab 237/128 Control Schematic

CONTRACT NO: 80860787 | SE: | DE: NS | PR:

DRAWING NO.: 10.3

TCP-8/9 Field Parts Tag Schedule

Field Bill of Materials w/ Tags

Tag	Part Number	Product Description	Manufacturer	Panel Or Field	Quantity
TE-1	ZS2P-ALC	ZS2 Pro Space Temp Sensor w/LCD, Rnet, SP Adj, Ovrd	Automated Logic	F	2
TE-2	NSB-10K-2-D-8-BB2-A	Duct, 8" Insertion, BB2 NEMA 4X	Automated Logic	F	2
V-1	Existing Valve	Existing Valve	Existing Valve	F	2
YKS-1	DT-300	PIR/Ultrasonic Ceiling Occupancy Sensor, 24 VAC/VDC, Light Level, Isolated Relay	Watt Stopper	F	2

SUNBELT CONTROLS
4511 Willow Road
Suite 4
Pleasanton, CA 94588

PROJECT:
L-1201 Science Building BAS
2700 E Leland Rd.
Pittsburg, CA 94565

FILENAME: 10 - TCP-8_9 - Lab Zones 237_128

REV	DESCRIPTION	DATE	BY
0	As-Built	10/11/2023	NS

DRAWING NAME: TCP-8/9 Field Parts Tag Schedule

CONTRACT NO: 80860787 | SE: | DE: NS | PR:

DRAWING NO.: 10.4

TCP-10/11/12 Panel Layout - Lab 126/127/130

Typical of 3

TCP #	Equipment
TCP-10	Lab 126
TCP-11	Lab 127
TCP-12	Lab 130

Panel Bill of Materials w/ Tags

Tag	Part Number	Product Description	Manufacturer	Panel Or Field	Quantity
ALC-1	OF1628-NR	BACnet Building Controller (Non-Routing), 16 UO, 28 UI	Automated Logic	P	3
ENC-1	SCE-24N2406LP	Saginaw Hinge Cover Enclosure, NEMA 1, 24x24x6	Saginaw	P	3
ES-1	2902994	120-240VAC to 24VDC Power Supply, 90W, 3.75A, DIN	Phoenix Contact	P	3
ISE-1	QL-10	Circuit Breaker, 120/240VAC, Din rail mount, 10A	Kele	P	3
PA-1	SCE-DLKLDB	1/4 Turn Keylock Door Latch, Black Finish	Saginaw	P	3
PA-2	804155	120VAC Single Receptacle, DIN Mount	Phoenix Contact	P	3
SUB-1	SCE-24N24MP	Saginaw Sub-panel, Solid, NEMA 1, 24x24	Saginaw	P	3

TCP-10/11/12

(24x24x6 NEMA-1)

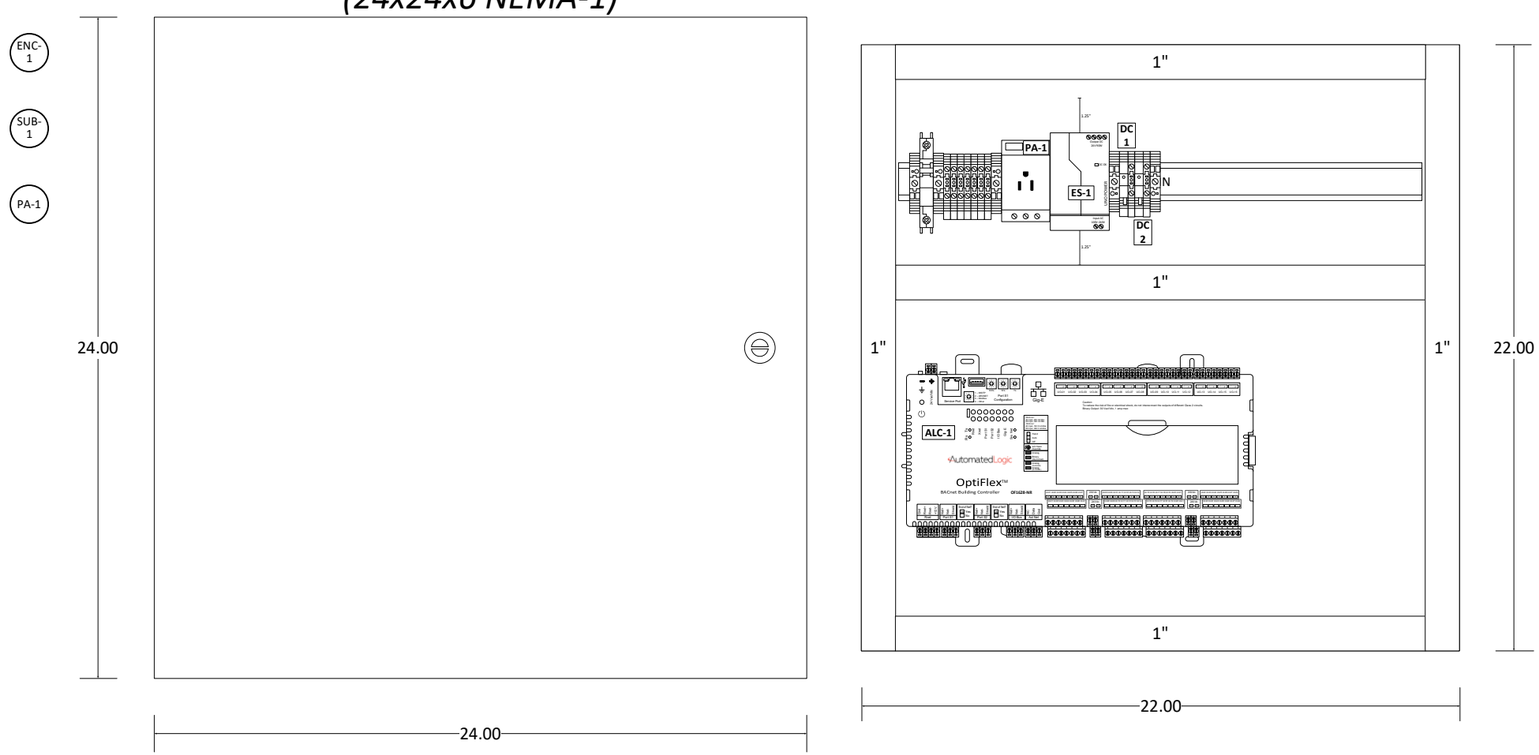

Panel Location: In Lab

SUNBELT CONTROLS
4511 Willow Road
Suite 4
Pleasanton, CA 94588

PROJECT:
L-1201 Science Building BAS
2700 E Leland Rd.
Pittsburg, CA 94565

FILENAME: 11 - TCP-10_11_12 - Lab Zones 126_127_130

REV	DESCRIPTION	DATE	BY
		0	
		0	
		0	
		0	
0	As-Built	10/11/2023	NS

DRAWING NAME:
TCP-10/11/12 Panel Layout - Lab 126/127/130

CONTRACT NO: 80860787 | SE: | DE: NS | PR:

DRAWING NO.: 11.1

TCP-10/11/12 Wiring Detail
Typical of 3

TCP #	Equipment
TCP-10	Lab 126
TCP-11	Lab 127
TCP-12	Lab 130

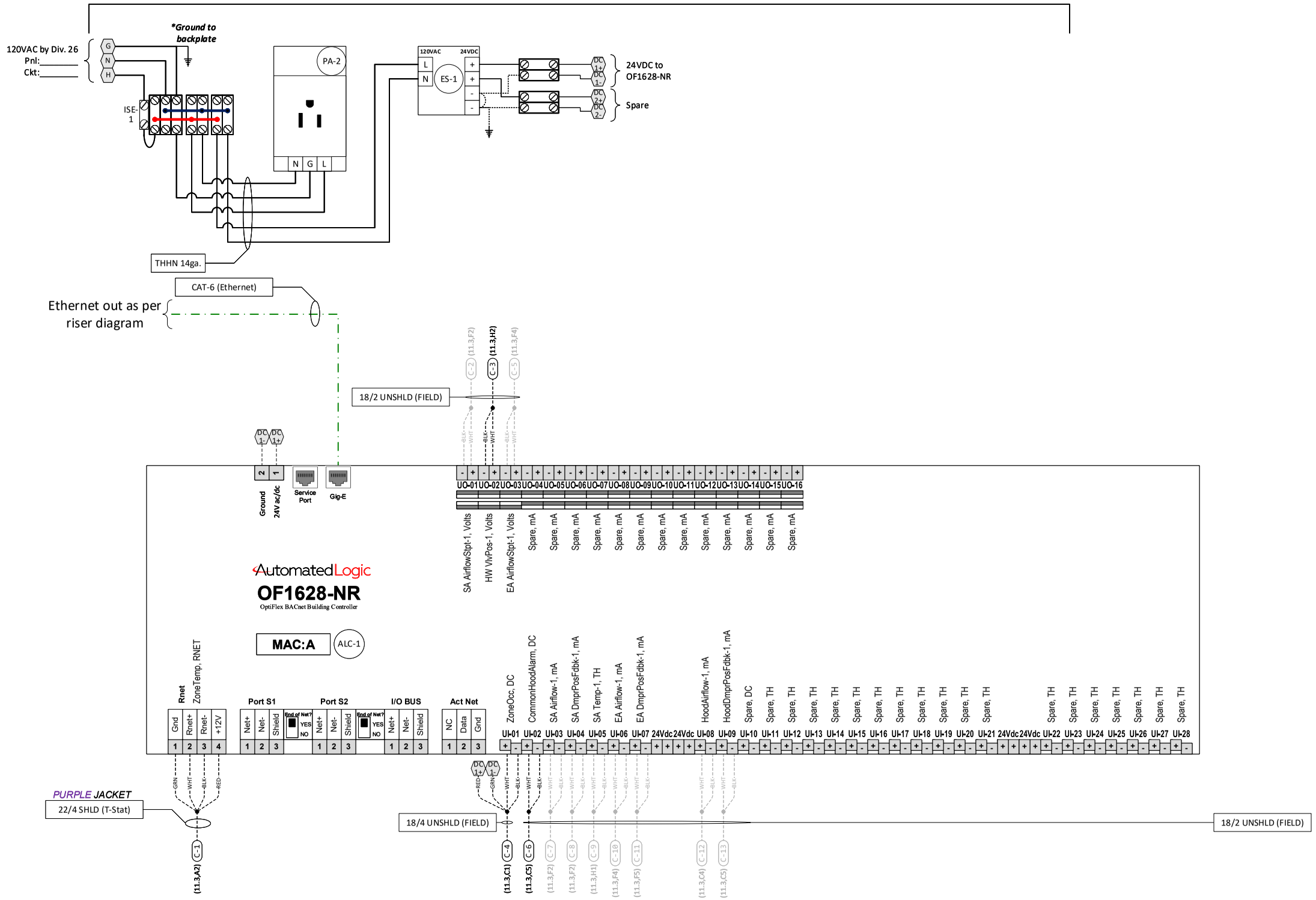

Power Loop Schedule - VDC

Power Supply	Tag	Part Number	Watts
DC-1	ALC-1	OF1628-NR	50
DC-1	YKS-1	DT-300	1
		Subtotal	51

SUNBELT CONTROLS
4511 Willow Road
Suite 4
Pleasanton, CA 94588

PROJECT:
L-1201 Science Building BAS
2700 E Leland Rd.
Pittsburg, CA 94565

FILENAME: 11 - TCP-10_11_12 - Lab Zones 126_127_130

REV	DESCRIPTION	DATE	BY
0	As-Built	10/11/2023	NS

DRAWING NAME: TCP-10/11/12 Wiring Detail
CONTRACT NO: 80860787 | SE: | DE: NS | PR:
DRAWING NO.: 11.2

Lab 126/127/130 Control Schematic
Typical of 3

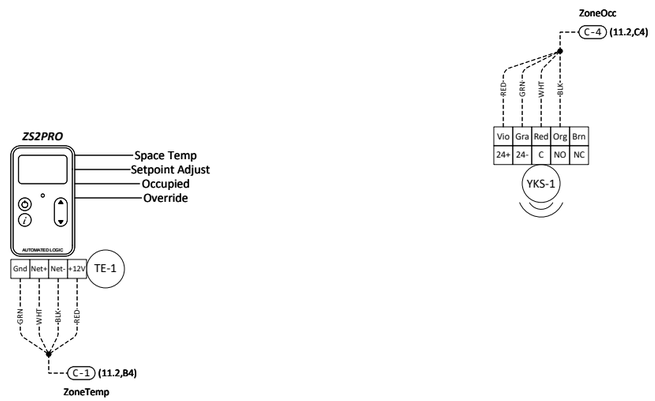

1. Zone Temperature & Occupancy Control Schematic

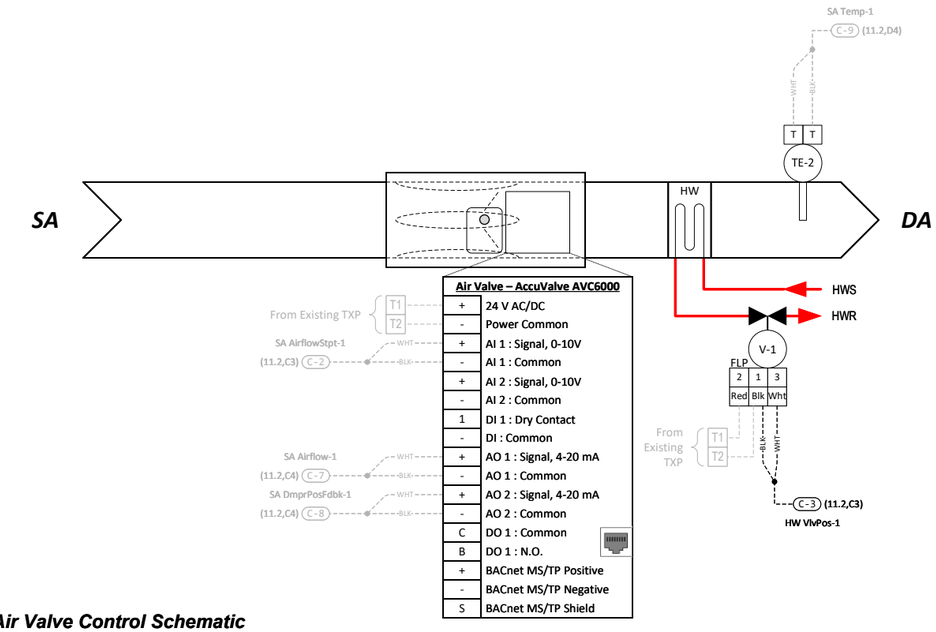

2. Supply Air Valve Control Schematic

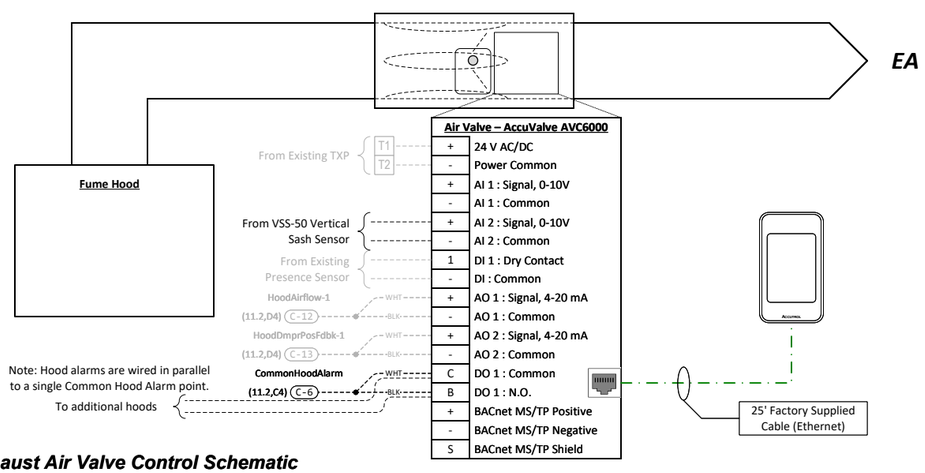

3. Hood Exhaust Air Valve Control Schematic

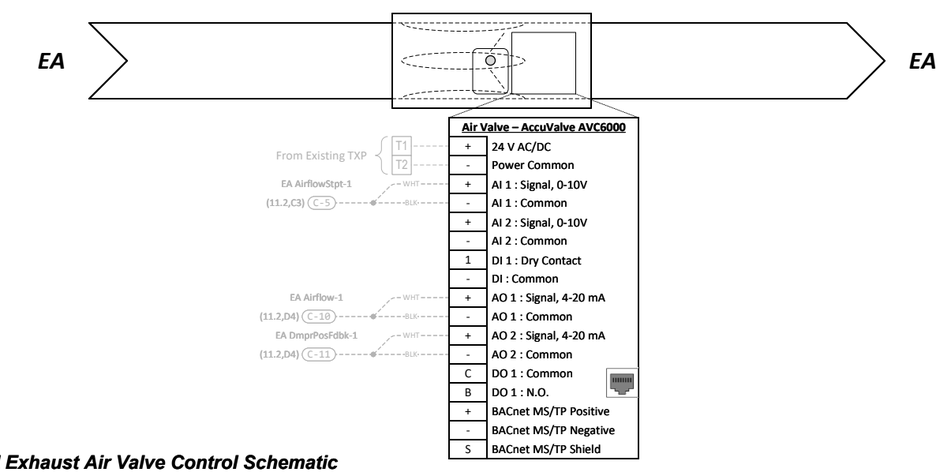

4. General Exhaust Air Valve Control Schematic

SUNBELT CONTROLS
4511 Willow Road
Suite 4
Pleasanton, CA 94588

PROJECT:
L-1201 Science Building BAS
2700 E Leland Rd.
Pittsburg, CA 94565

FILENAME: 11 - TCP-10_11_12 - Lab Zones 126_127_130

REV	DESCRIPTION	DATE	BY
		0	
		0	
		0	
		0	
0	As-Built	10/11/2023	NS

DRAWING NAME: Lab 126/127/130 Control Schematic

CONTRACT NO: 80860787 | SE: | DE: NS | PR:

DRAWING NO.: 11.3

TCP-10/11/12 Field Parts Tag Schedule

Field Bill of Materials w/ Tags

Tag	Part Number	Product Description	Manufacturer	Panel Or Field	Quantity
TE-1	ZS2P-ALC	ZS2 Pro Space Temp Sensor w/LCD, Rnet, SP Adj, Ovrd	Automated Logic	F	3
TE-2	NSB-10K-2-D-8-BB2-A	Duct, 8" Insertion, BB2 NEMA 4X	Automated Logic	F	3
V-1	Existing Valve	Existing Valve	Existing Valve	F	3
YKS-1	DT-300	PIR/Ultrasonic Ceiling Occupancy Sensor, 24 VAC/VDC, Light Level, Isolated Relay	Watt Stopper	F	3

SUNBELT CONTROLS
4511 Willow Road
Suite 4
Pleasanton, CA 94588

PROJECT:
L-1201 Science Building BAS
2700 E Leland Rd.
Pittsburg, CA 94565

FILENAME: 11 - TCP-10_11_12 - Lab Zones 126_127_130

REV	DESCRIPTION	DATE	BY
0	As-Built	10/11/2023	NS

DRAWING NAME: TCP-10/11/12 Field Parts Tag Schedule

CONTRACT NO: 80860787 | SE: | DE: NS | PR:

DRAWING NO.: 11.4

TCP-MON Panel Layout - Domestic CW & ATS

Panel Bill of Materials w/ Tags

Tag	Part Number	Product Description	Manufacturer	Panel Or Field	Quantity
ALC-1	OF683-E2	Zone Controller, 6 BO, 8 IN, 2 AO, 1 UO, Local Integration, 2X Ethernet	Automated Logic	P	1
ALC-2	OF561-E2	Zone Controller, 6 BO, 6 IN, 1 UO, Local Integration, 2X Ethernet	Automated Logic	P	1
ES-1	2902994	120-240VAC to 24VDC Power Supply, 90W, 3.75A, DIN	Phoenix Contact	P	1
ISE-1	QL-10	Circuit Breaker, 120/240VAC, Din rail mount, 10A	Kele	P	1
PA-1	804155	120VAC Single Receptacle, DIN Mount	Phoenix Contact	P	1

TCP-MON

(24x24x6 NEMA-1)

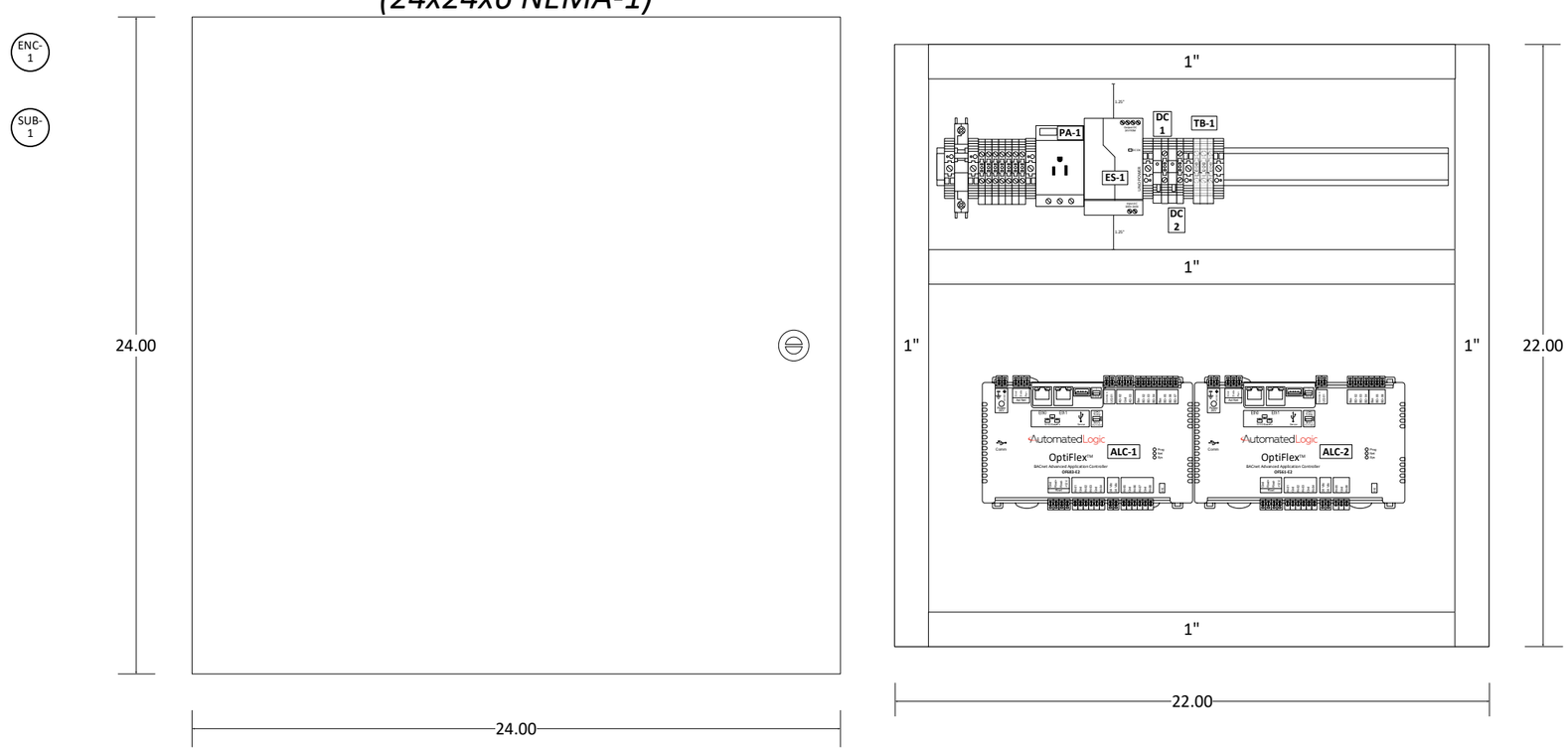

Panel Location: Chiller Room

SUNBELT CONTROLS
4511 Willow Road
Suite 4
Pleasanton, CA 94588

PROJECT:
L-1201 Science Building BAS
2700 E Leland Rd.
Pittsburg, CA 94565

FILENAME: 12 - TCP-MON - Domestic Water & ATS

REV	DESCRIPTION	DATE	BY
0	As-Built	10/11/2023	NS

DRAWING NAME: TCP-MON Panel Layout - Domestic CW & ATS

CONTRACT NO: 80860787 | SE: | DE: NS | PR:

DRAWING NO.: 12.1

TCP-MON Wiring Detail

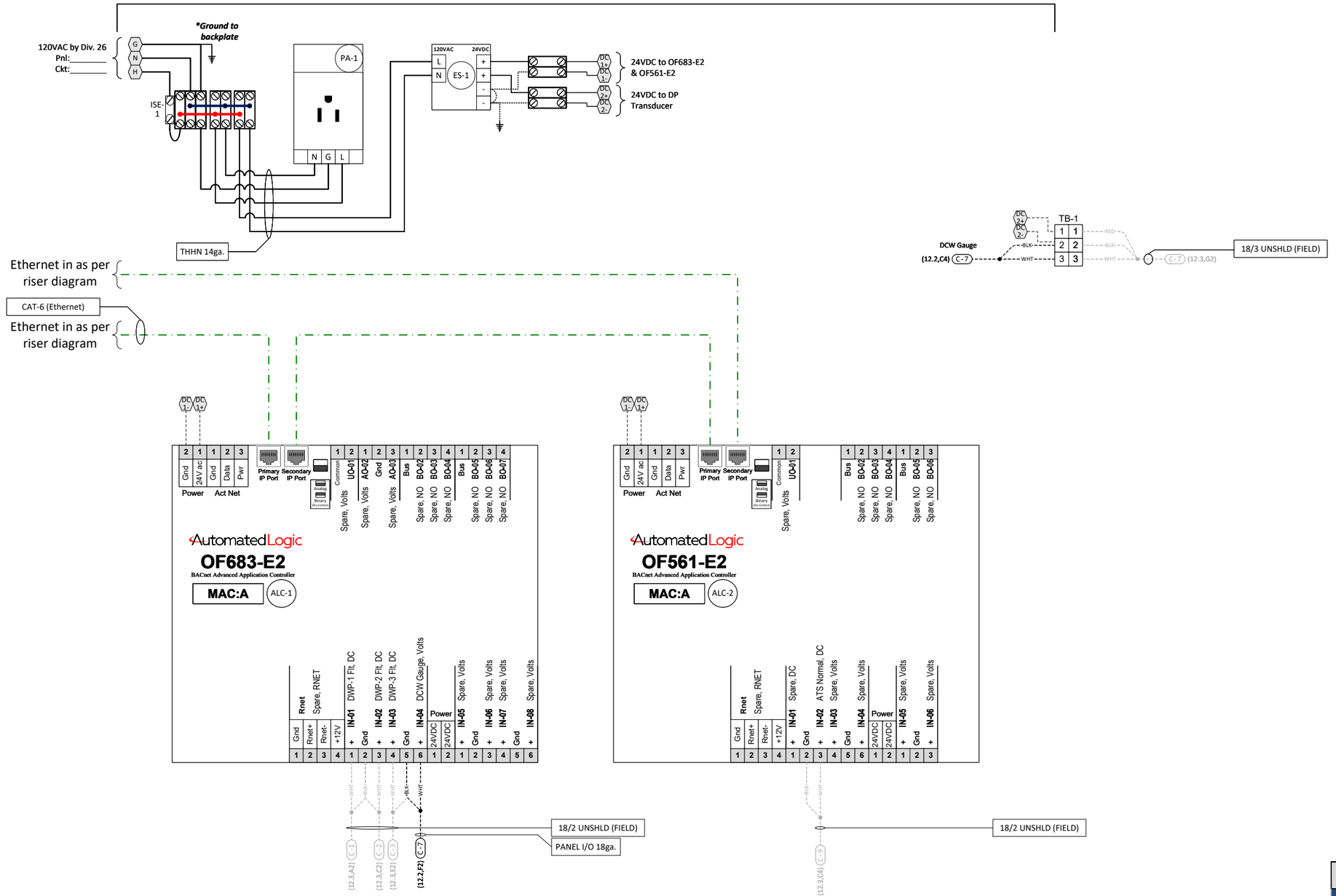

Power Loop Schedule - VDC

Power Supply	Tag	Part Number	Watts
DC-1	ALC-1	OF683-E2	20
DC-1	ALC-2	OF561-E2	20
		Subtotal	40

SUNBELT CONTROLS
4511 Willow Road
Suite 4
Pleasanton, CA 94588

PROJECT:
L-1201 Science Building BAS
2700 E Leland Rd.
Pittsburg, CA 94565

FILENAME: 12 - TCP-MON - Domestic Water & ATS

REV	DESCRIPTION	DATE	BY
0	As-Built	10/11/2023	NS

DRAWING NAME: TCP-MON Wiring Detail

CONTRACT NO: 80860787 | SE: | DE: NS | PR:

DRAWING NO.: 12.2

Domestic CW & ATS Control Schematic

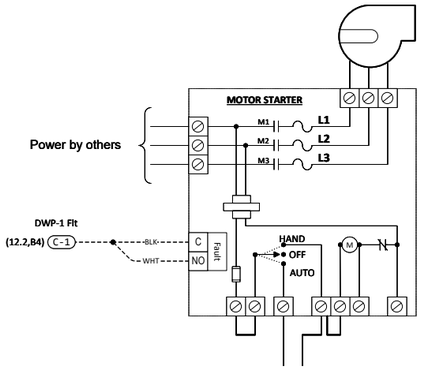

1. DWP-1 Starter Wiring Schematic

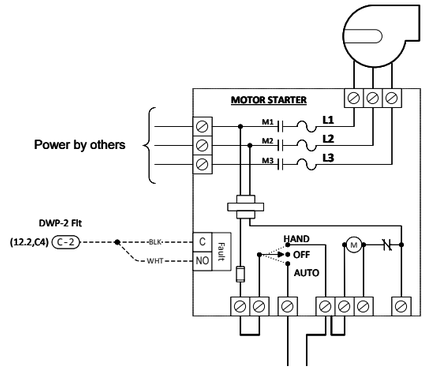

2. DWP-2 Starter Wiring Schematic

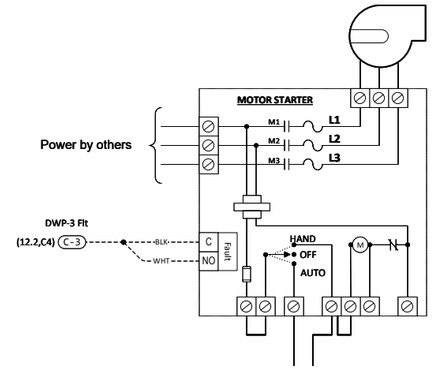

3. DWP-3 Starter Wiring Schematic

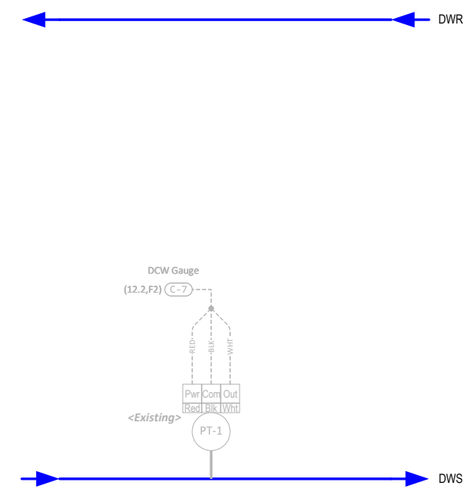

4. DW Control Schematic

5. ATS Wiring Schematic

SUNBELT CONTROLS
4511 Willow Road
Suite 4
Pleasanton, CA 94588

PROJECT:
L-1201 Science Building BAS
2700 E Leland Rd.
Pittsburg, CA 94565

FILENAME: 12 - TCP-MON - Domestic Water & ATS

REV	DESCRIPTION	DATE	BY
0	As-Built	10/11/2023	NS
		0	
		0	
		0	
		0	

DRAWING NAME:
Domestic CW & ATS Control Schematic

CONTRACT NO: 80860787 | SE: | DE: NS | PR:

DRAWING NO.: 12.3

A B C D E F G H

TCP-MON Field Parts Tag Schedule

1 2 3 4 5

No new parts associated with this panel.

SUNBELT CONTROLS
4511 Willow Road
Suite 4
Pleasanton, CA 94588

PROJECT:
L-1201 Science Building BAS
2700 E Leland Rd.
Pittsburg, CA 94565

FILENAME: 12 - TCP-MON - Domestic Water & ATS

REV	DESCRIPTION	DATE	BY
		0	
		0	
		0	
		0	
0	As-Built	10/11/2023	NS

DRAWING NAME:
TCP-MON Field Parts Tag Schedule

CONTRACT NO: 80860787 | SE: | DE: NS | PR:

DRAWING NO.: 12.4

TCP-13 Panel Layout - Industrial & Domestic HW

Panel Bill of Materials w/ Tags

Tag	Part Number	Product Description	Manufacturer	Panel Or Field	Quantity
ALC-1	OF561-E2	Zone Controller, 6 BO, 6 IN, 1 UO, Local Integration, 2X Ethernet	Automated Logic	P	1
ENC-1	SCE-20N1606LP	Saginaw Hinge Cover Enclosure, NEMA 1, 20x16x6	Saginaw	P	1
ES-1	2902994	120-240VAC to 24VDC Power Supply, 90W, 3.75A, DIN	Phoenix Contact	P	1
ISE-1	QL-10	Circuit Breaker, 120/240VAC, Din rail mount, 10A	Kele	P	1
PA-1	804155	120VAC Single Receptacle, DIN Mount	Phoenix Contact	P	1
SUB-1	SCE-20N16MP	Saginaw Sub-panel, Solid, NEMA 1, 20x16	Saginaw	P	1

TCP-13

(20x16x6 NEMA-1)

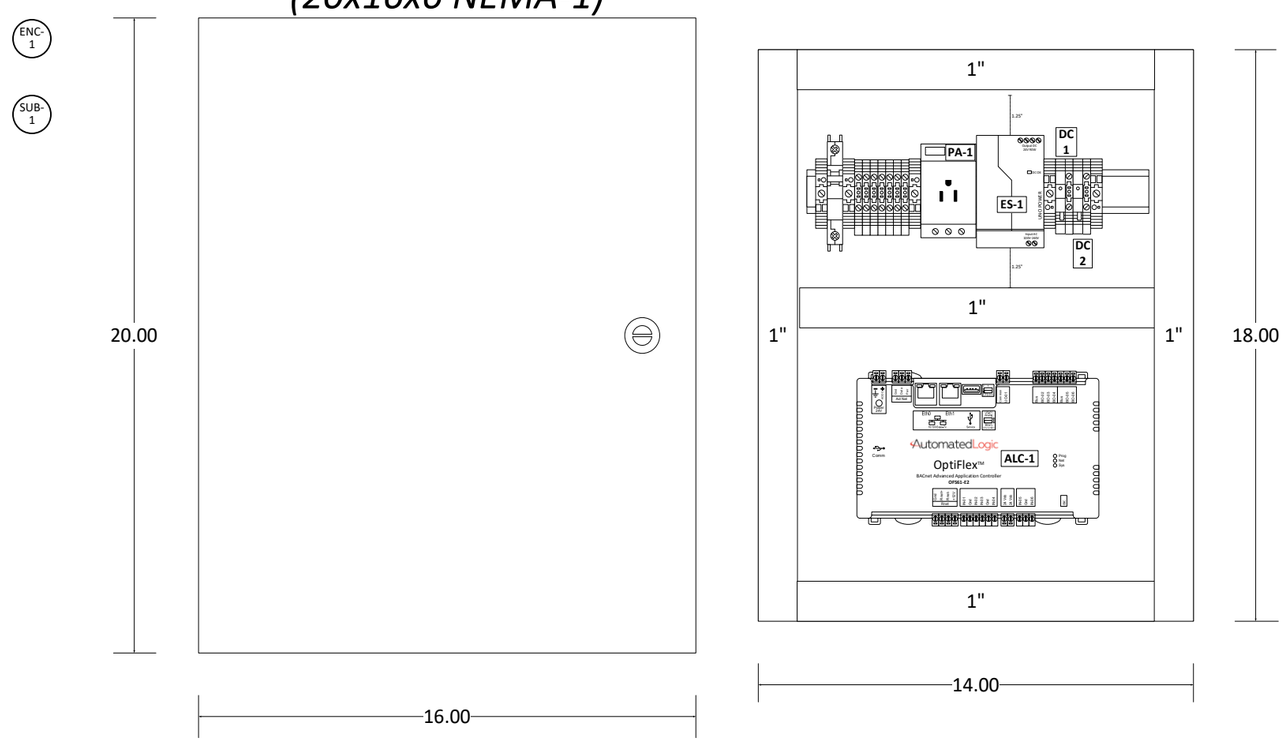

Panel Location: Room 123

SUNBELT CONTROLS
4511 Willow Road
Suite 4
Pleasanton, CA 94588

PROJECT:
L-1201 Science Building BAS
2700 E Leland Rd.
Pittsburg, CA 94565

FILENAME: 13 - TCP-13 - Plumbing Equipment

REV	DESCRIPTION	DATE	BY
		0	
		0	
		0	
		0	
0	As-Built	10/11/2023	NS

DRAWING NAME:
TCP-13 Panel Layout - Industrial & Domestic HW

CONTRACT NO: 80860787 | SE: | DE: NS | PR:

DRAWING NO.: 13.1

TCP-13 Wiring Detail

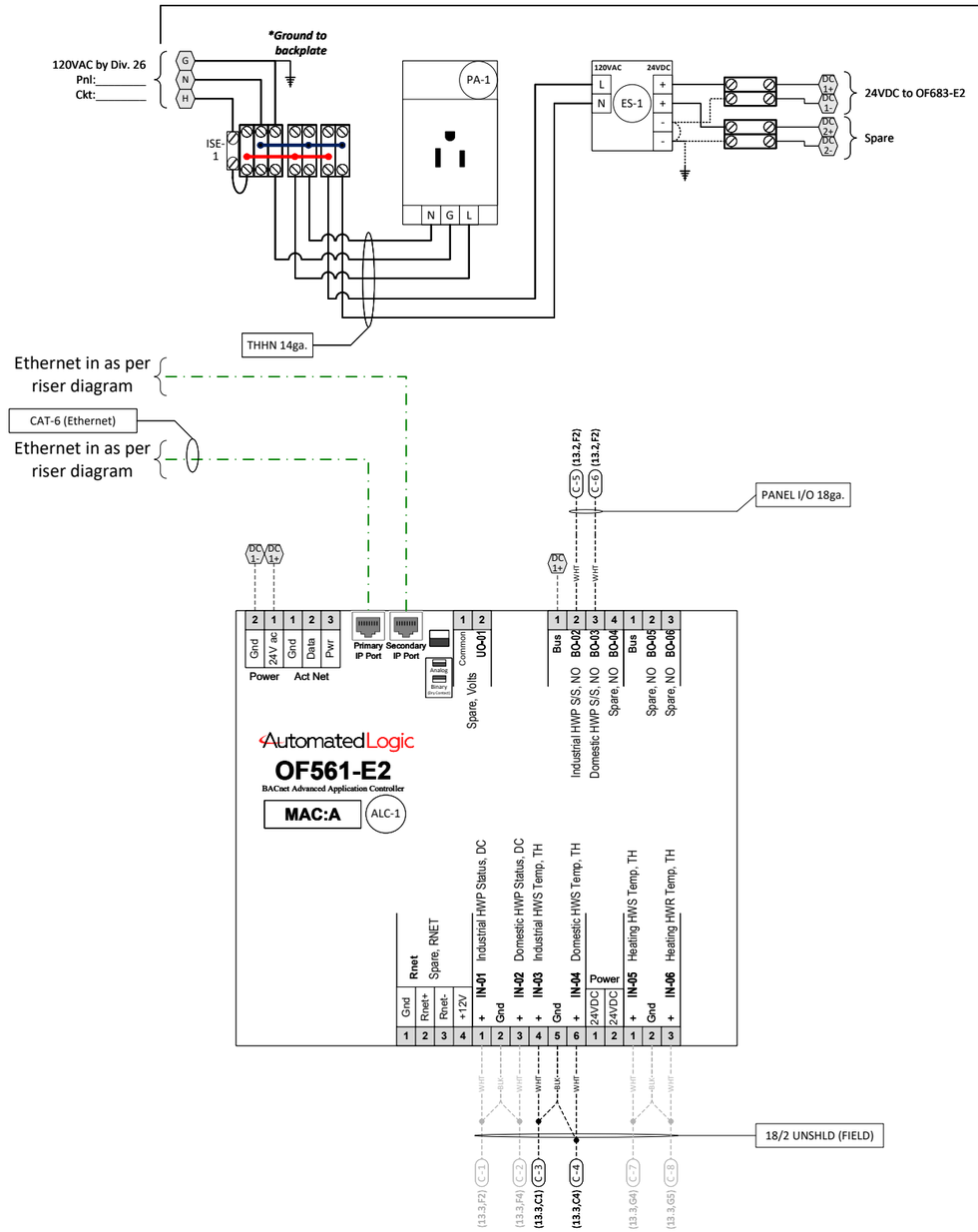

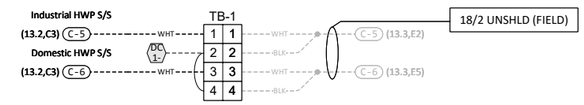

Power Loop Schedule - VDC

Power Supply	Tag	Part Number	Watts
DC-1	ALC-1	OF561-E2	20
DC-1	CR-1	RIBU1C	0.43
DC-1	CR-2	RIBU1C	0.43
		Subtotal	20.86

SUNBELT CONTROLS
4511 Willow Road
Suite 4
Pleasanton, CA 94588

PROJECT:
L-1201 Science Building BAS
2700 E Leland Rd.
Pittsburg, CA 94565

FILENAME: 13 - TCP-13 - Plumbing Equipment

REV	DESCRIPTION	DATE	BY
0	As-Built	10/11/2023	NS

DRAWING NAME: TCP-13 Wiring Detail

CONTRACT NO: 80860787 | SE: | DE: NS | PR:

DRAWING NO.: 13.2

Industrial & Domestic HW Control Schematic

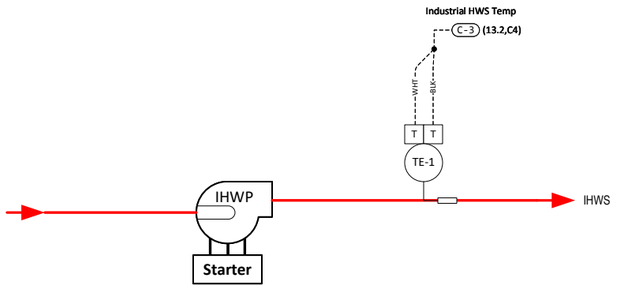

1. Industrial Hot Water Control Schematic

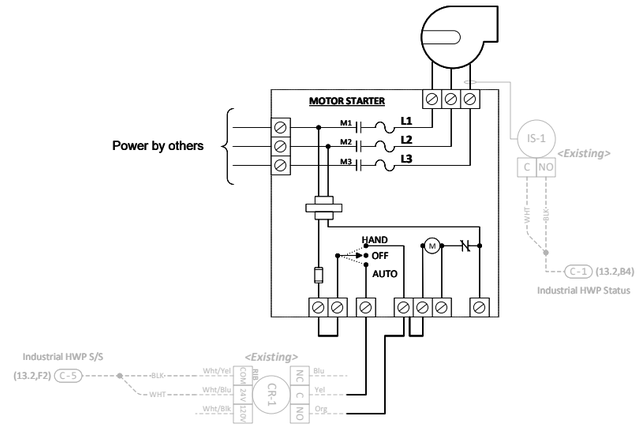

2. Industrial HWP Starter Wiring Schematic

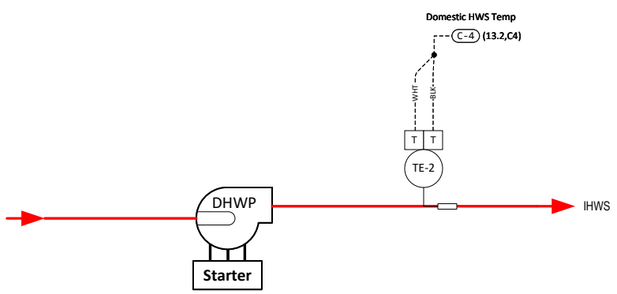

3. Domestic Hot Water Control Schematic

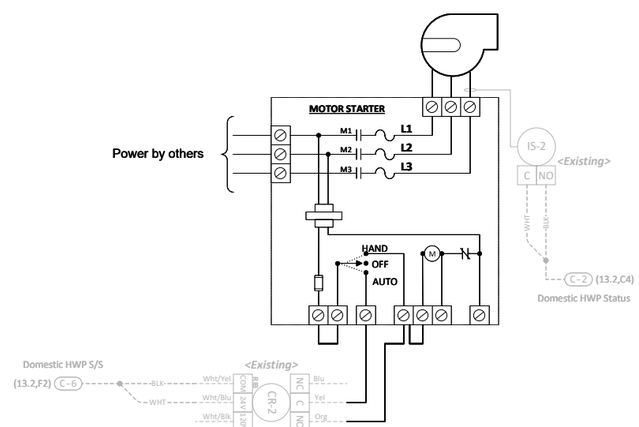

4. Domestic HWP Starter Wiring Schematic

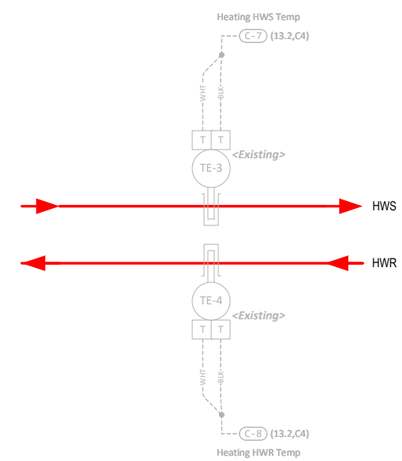

5. Heating HW Control Schematic

SUNBELT CONTROLS
4511 Willow Road
Suite 4
Pleasanton, CA 94588

PROJECT:
L-1201 Science Building BAS
2700 E Leland Rd.
Pittsburg, CA 94565

FILENAME: 13 - TCP-13 - Plumbing Equipment

REV	DESCRIPTION	DATE	BY
		0	
		0	
		0	
		0	
0	As-Built	10/11/2023	NS

DRAWING NAME: Industrial & Domestic HW Control Schematic

CONTRACT NO: 80860787 | SE: | DE: NS | PR:

DRAWING NO.: 13.3

TCP-13 Field Parts Tag Schedule

Field Bill of Materials w/ Tags

Tag	Part Number	Product Description	Manufacturer	Panel Or Field	Quantity
TE-1	NSB-10K-2-S-BB2-A	Clamp-On Strap with 10K-2 Thermistor and Box 2 Enclosure	Automated Logic	F	1
TE-2	NSB-10K-2-S-BB2-A	Clamp-On Strap with 10K-2 Thermistor and Box 2 Enclosure	Automated Logic	F	1

SUNBELT CONTROLS
4511 Willow Road
Suite 4
Pleasanton, CA 94588

PROJECT:
L-1201 Science Building BAS
2700 E Leland Rd.
Pittsburg, CA 94565

FILENAME: 13 - TCP-13 - Plumbing Equipment

REV	DESCRIPTION	DATE	BY
0	As-Built	10/11/2023	NS

DRAWING NAME: TCP-13 Field Parts Tag Schedule

CONTRACT NO: 80860787 | SE: | DE: NS | PR:

DRAWING NO.: 13.4

TCP-14 Panel Layout - ACI-1/2 & Power Meter

Panel Bill of Materials w/ Tags

Tag	Part Number	Product Description	Manufacturer	Panel Or Field	Quantity
ALC-1	OFHI	BACnet Integrator, 1,500 BACnet Points, 1,000 Modbus Points	Automated Logic	P	1
ENC-1	SCE-20N1606LP	Saginaw Hinge Cover Enclosure, NEMA 1, 20x16x6	Saginaw	P	1
ES-1	2902994	120-240VAC to 24VDC Power Supply, 90W, 3.75A, DIN	Phoenix Contact	P	1
ISE-1	QL-10	Circuit Breaker, 120/240VAC, Din rail mount, 10A	Kele	P	1
PA-1	SCE-DLKLDB	1/4 Turn Keylock Door Latch, Black Finish	Saginaw	P	1
PA-2	804155	120VAC Single Receptacle, DIN Mount	Phoenix Contact	P	1
SUB-1	SCE-20N16MP	Saginaw Sub-panel, Solid, NEMA 1, 20x16	Saginaw	P	1

TCP-14

(20x16x6 NEMA-1)

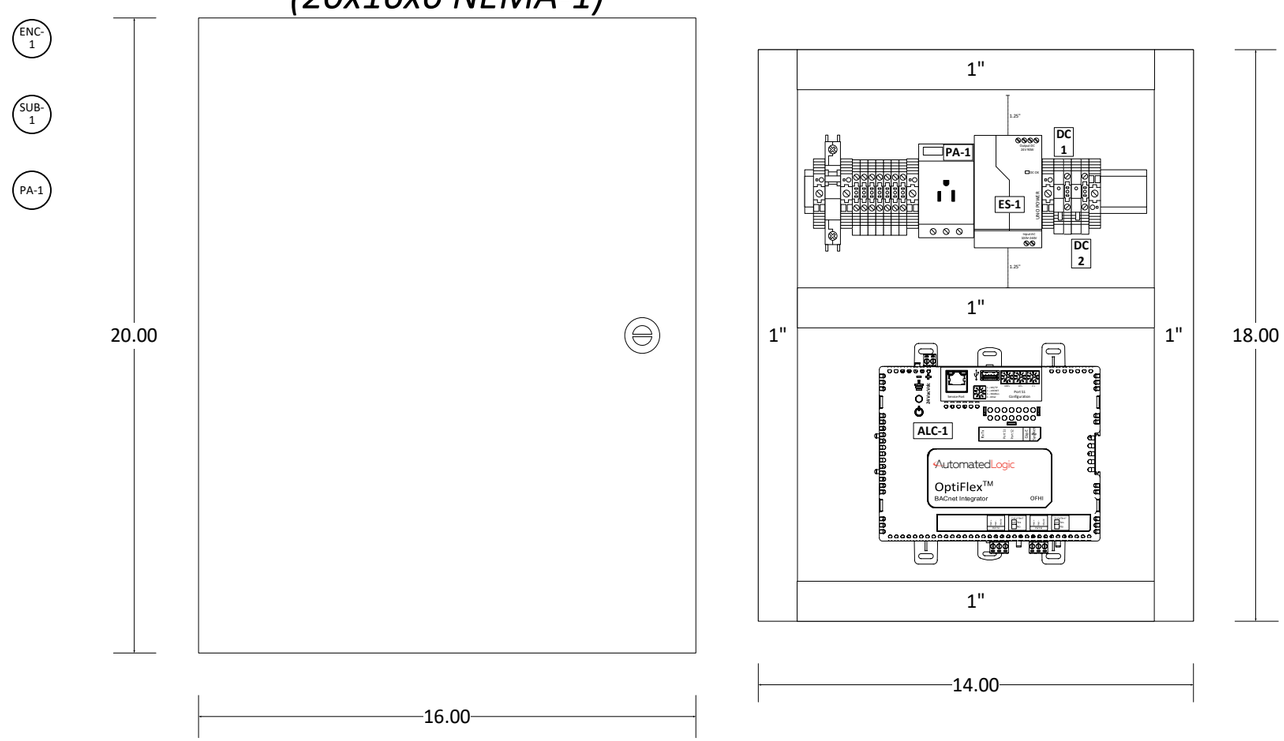

Panel Location: IDF Room 1108

SUNBELT CONTROLS
4511 Willow Road
Suite 4
Pleasanton, CA 94588

PROJECT:
L-1201 Science Building BAS
2700 E Leland Rd.
Pittsburg, CA 94565

FILENAME: 14 - TCP-14 - ACI-1_2 & Power Meter

REV	DESCRIPTION	DATE	BY
		0	
		0	
		0	
		0	
0	As-Built	10/11/2023	NS

DRAWING NAME:
TCP-14 Panel Layout - ACI-1/2 & Power Meter

CONTRACT NO: 80860787 | SE: | DE: NS | PR:

DRAWING NO.: 14.1

TCP-14 Wiring Detail

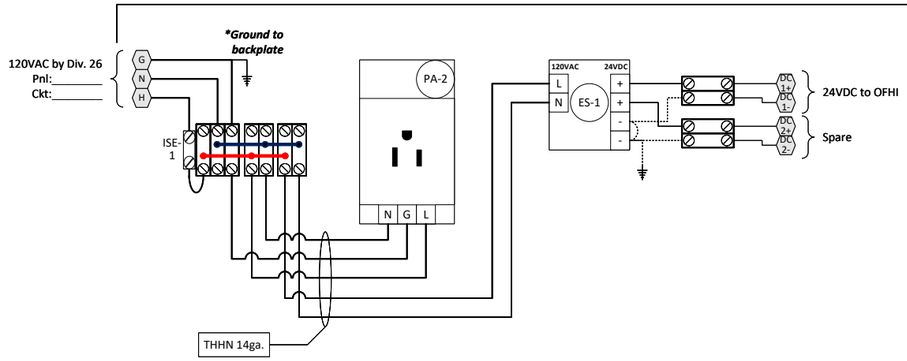

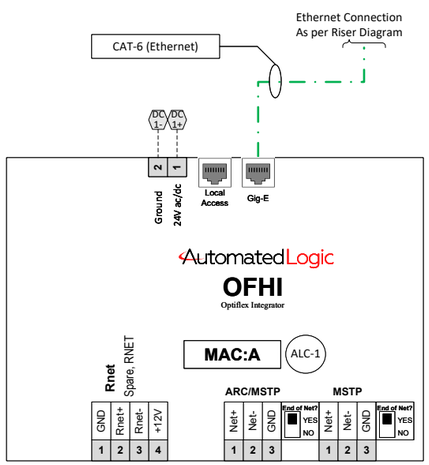

Power Loop Schedule - VDC

Power Supply	Tag	Part Number	Watts
DC-1	ALC-1	OFHI	15
		Subtotal	15

SUNBELT CONTROLS
4511 Willow Road
Suite 4
Pleasanton, CA 94588

PROJECT:
L-1201 Science Building BAS
2700 E Leland Rd.
Pittsburg, CA 94565

FILENAME: 14 - TCP-14 - ACI-1_2 & Power Meter

REV	DESCRIPTION	DATE	BY
0	As-Built	10/11/2023	NS

DRAWING NAME: TCP-14 Wiring Detail

CONTRACT NO: 80860787 | SE: | DE: NS | PR:

DRAWING NO.: 14.2

A B C D E F G H

TCP-14 Field Parts Tag Schedule

1 2 3 4 5

No new parts associated with this panel.

SUNBELT CONTROLS
4511 Willow Road
Suite 4
Pleasanton, CA 94588

PROJECT:
L-1201 Science Building BAS
2700 E Leland Rd.
Pittsburg, CA 94565

FILENAME: 14 - TCP-14 - ACI-1_2 & Power Meter

REV	DESCRIPTION	DATE	BY
		0	
		0	
		0	
		0	
0	As-Built	10/11/2023	NS

DRAWING NAME:
TCP-14 Field Parts Tag Schedule

CONTRACT NO: 80860787 | **SE:** | **DE: NS** | **PR:**

DRAWING NO.: 14.3

TCP-15 Panel Layout - ACI-3/4

Panel Bill of Materials w/ Tags

Tag	Part Number	Product Description	Manufacturer	Panel Or Field	Quantity
ALC-1	G5CE	BACnet Integrator, ARCnet and MS/TP, Gigabit Ethernet	Automated Logic	P	1
ENC-1	SCE-20N1606LP	Saginaw Hinge Cover Enclosure, NEMA 1, 20x16x6	Saginaw	P	1
ES-1	2902994	120-240VAC to 24VDC Power Supply, 90W, 3.75A, DIN	Phoenix Contact	P	1
ISE-1	QL-10	Circuit Breaker, 120/240VAC, Din rail mount, 10A	Kele	P	1
PA-1	SCE-DLKLDB	1/4 Turn Keylock Door Latch, Black Finish	Saginaw	P	1
PA-2	804155	120VAC Single Receptacle, DIN Mount	Phoenix Contact	P	1
SUB-1	SCE-20N16MP	Saginaw Sub-panel, Solid, NEMA 1, 20x16	Saginaw	P	1

TCP-15

(20x16x6 NEMA-1)

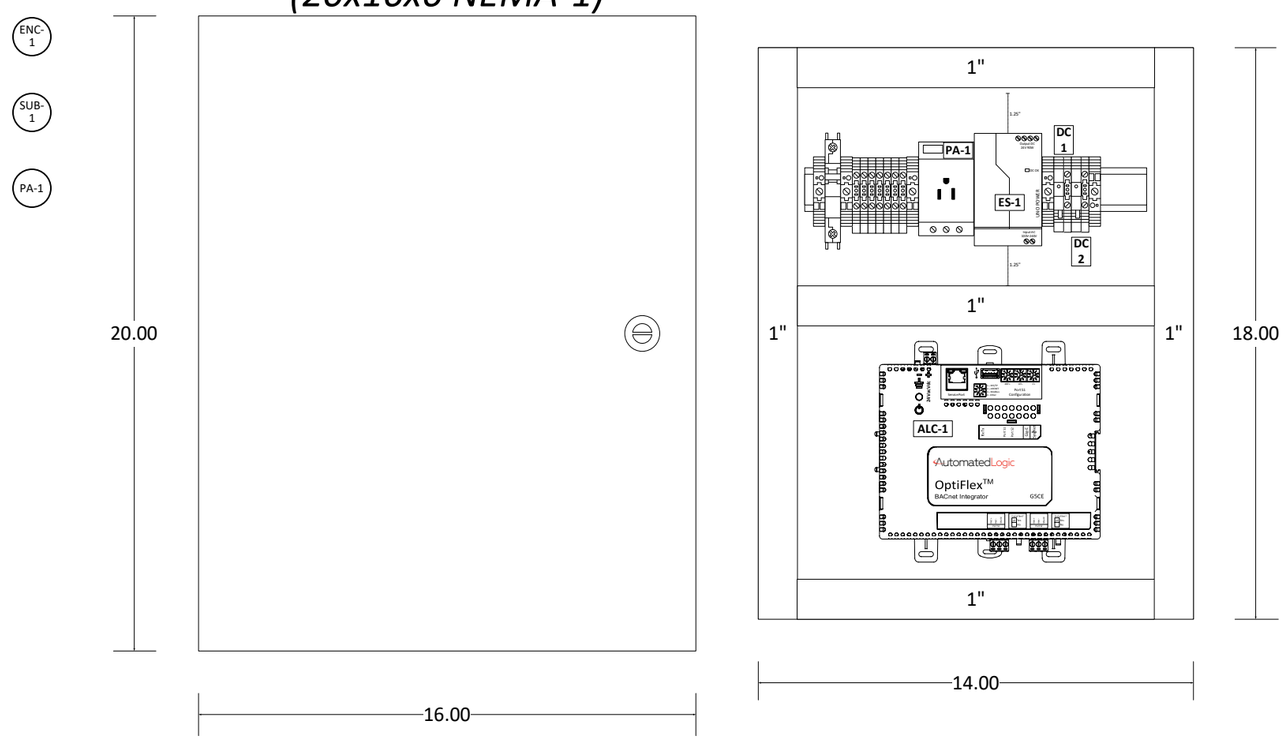

Panel Location: IDF Room 209

SUNBELT CONTROLS
4511 Willow Road
Suite 4
Pleasanton, CA 94588

PROJECT:
L-1201 Science Building BAS
2700 E Leland Rd.
Pittsburg, CA 94565

FILENAME: 15 - TCP-15 - ACI-3_4

REV	DESCRIPTION	DATE	BY
		0	
		0	
		0	
		0	
0	As-Built	10/11/2023	NS

DRAWING NAME:
TCP-15 Panel Layout - ACI-3/4

CONTRACT NO: 80860787 | SE: | DE: NS | PR:

DRAWING NO.: 15.1

TCP-15 Wiring Detail

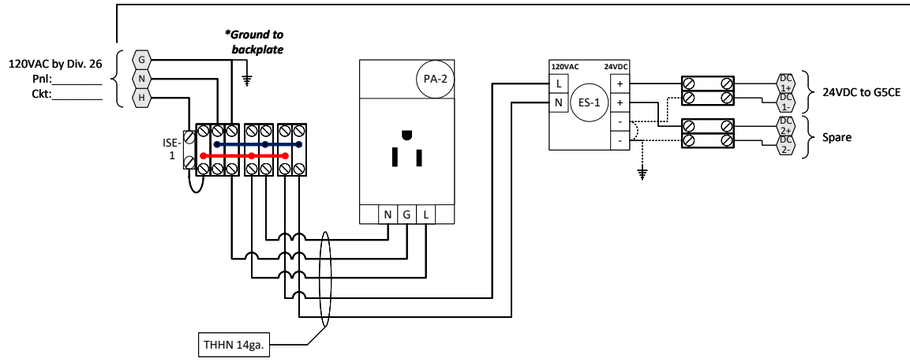

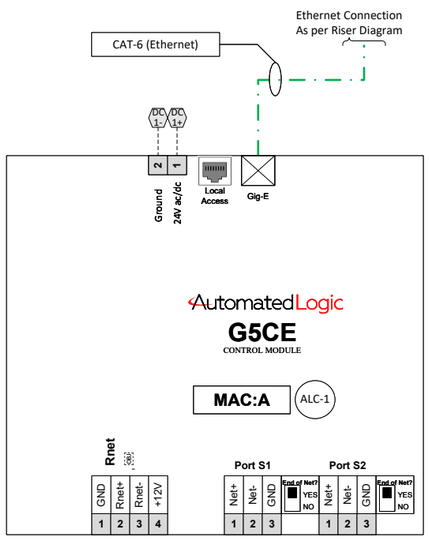

Power Loop Schedule - VDC

Power Supply	Tag	Part Number	Watts
DC-1	ALC-1	G5CE	15
		Subtotal	15

SUNBELT CONTROLS
4511 Willow Road
Suite 4
Pleasanton, CA 94588

PROJECT:
L-1201 Science Building BAS
2700 E Leland Rd.
Pittsburg, CA 94565

FILENAME: 15 - TCP-15 - ACI-3_4

REV	DESCRIPTION	DATE	BY
0	As-Built	10/11/2023	NS

DRAWING NAME: TCP-15 Wiring Detail

CONTRACT NO: 80860787 | SE: | DE: NS | PR:

DRAWING NO.: 15.2

TCP-15 Field Parts Tag Schedule

Field Bill of Materials w/ Tags

Tag	Part Number	Product Description	Manufacturer	Panel Or Field	Quantity
ALC-2	TBPL-24-H-A	BACnet Plus Thermostat, Temperature and Humidity, ALC Logo	Automated Logic	F	2
G-1	PAC-US444CN-1	Thermostat Interface Card	Mitsubishi	F	2

No new parts associated with this panel.

SUNBELT CONTROLS
4511 Willow Road
Suite 4
Pleasanton, CA 94588

PROJECT:
L-1201 Science Building BAS
2700 E Leland Rd.
Pittsburg, CA 94565

FILENAME: 15 - TCP-15 - ACI-3_4

REV	DESCRIPTION	DATE	BY
0	As-Built	10/11/2023	NS

DRAWING NAME: TCP-15 Field Parts Tag Schedule

CONTRACT NO: 80860787 | SE: | DE: NS | PR:

DRAWING NO.: 15.3

ACS-1/2 Wiring Detail
Typical of 2

Equipment
ACS-1
ACS-2

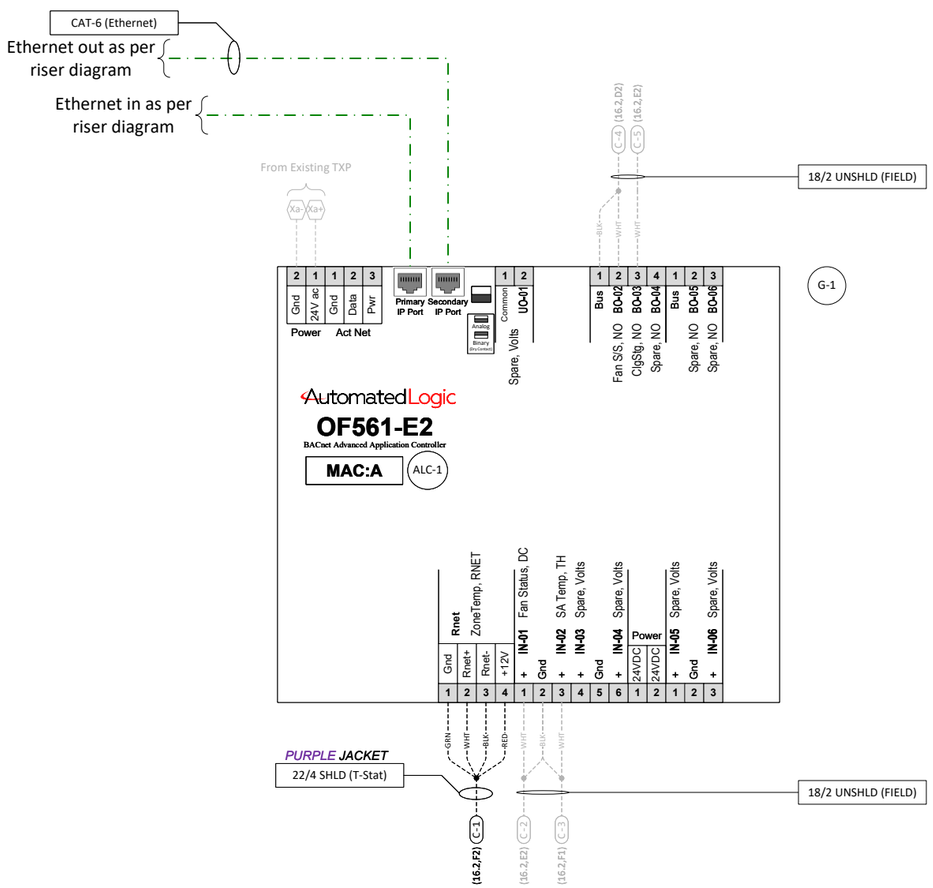

Power Loop Schedule - VDC

Power Supply	Tag	Part Number	Watts
DC-1	ALC-1	OF561-E2	20
		Subtotal	20

SUNBELT CONTROLS
4511 Willow Road
Suite 4
Pleasanton, CA 94588

PROJECT:
L-1201 Science Building BAS
2700 E Leland Rd.
Pittsburg, CA 94565

FILENAME: 16 - ACS-1_2

REV	DESCRIPTION	DATE	BY
0	As-Built	10/11/2023	NS

DRAWING NAME: ACS-1/2 Wiring Detail
CONTRACT NO: 80860787 | SE: | DE: NS | PR:
DRAWING NO.: 16.1

ACS-1/2 Control Schematic
Typical of 2

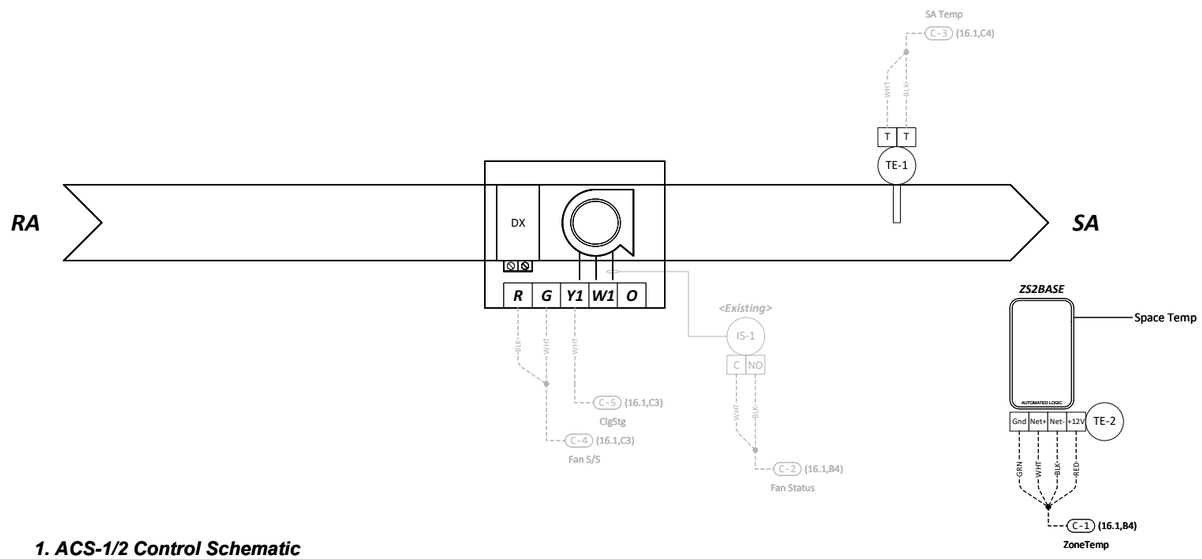

1. ACS-1/2 Control Schematic

SUNBELT CONTROLS
4511 Willow Road
Suite 4
Pleasanton, CA 94588

PROJECT:
L-1201 Science Building BAS
2700 E Leland Rd.
Pittsburg, CA 94565

FILENAME: 16 - ACS-1_2

REV	DESCRIPTION	DATE	BY
		0	
		0	
		0	
		0	
0	As-Built	10/11/2023	NS

DRAWING NAME:
ACS-1/2 Control Schematic

CONTRACT NO: 80860787 | **SE:** | **DE: NS** | **PR:**

DRAWING NO.: 16.2

ACS-1/2 Field Parts Tag Schedule

Bill of Materials w/ Tags

Tag	Part Number	Product Description	Manufacturer	Panel Or Field	Quantity
ALC-1	OF561-E2	Zone Controller, 6 BO, 6 IN, 1 UO, Local Integration, 2X Ethernet	Automated Logic	P	2
G-1	PLM-KIT	Plenum Kit for OptiFlex Advanced Application Controllers	Automated Logic	F	2
TE-1	NSB-10K-2-D-8-BB2-A	Duct, 8" Insertion, BB2 NEMA 4X	Automated Logic	F	2
TE-2	ZS2-ALC	ZS2 Std Space Temp Sensor, Rnet	Automated Logic	F	2

SUNBELT CONTROLS
4511 Willow Road
Suite 4
Pleasanton, CA 94588

PROJECT:
L-1201 Science Building BAS
2700 E Leland Rd.
Pittsburg, CA 94565

FILENAME: 16 - ACS-1_2

REV	DESCRIPTION	DATE	BY
0	As-Built	10/11/2023	NS
		0	
		0	
		0	
		0	

DRAWING NAME:
ACS-1/2 Field Parts Tag Schedule

CONTRACT NO: 80860787 | SE: | DE: NS | PR:

DRAWING NO.: 16.3

RH VAV Wiring & Schematic
Typical of 35

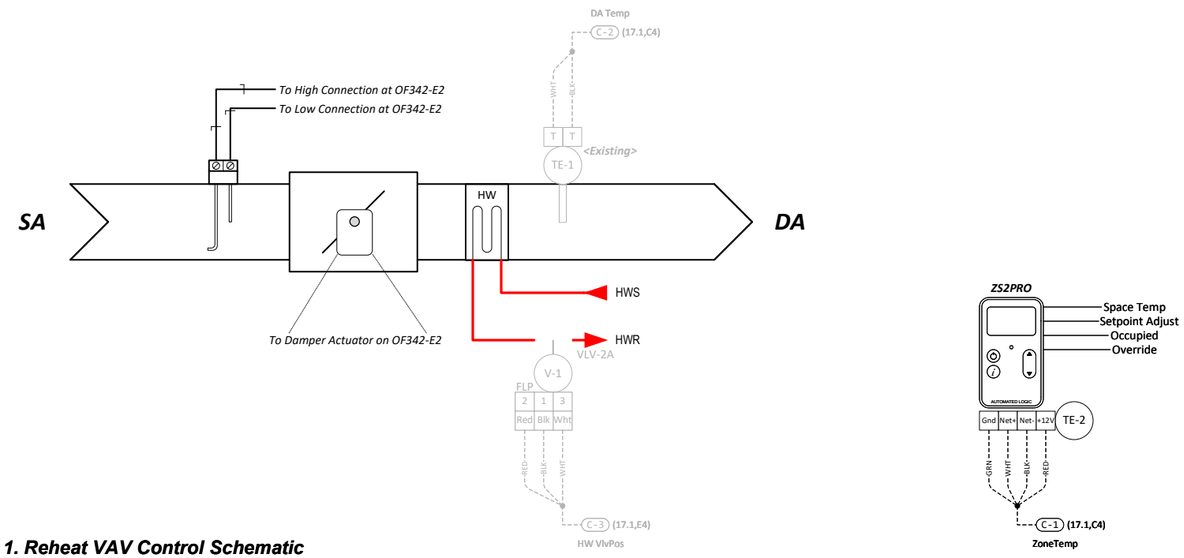

1. Reheat VAV Control Schematic

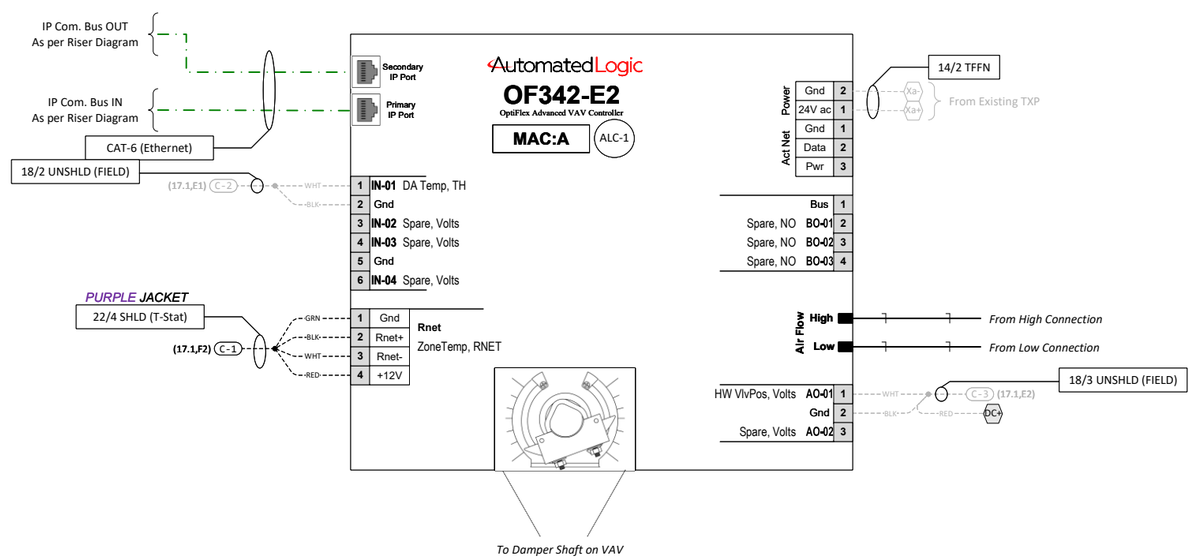

2. Reheat VAV Wiring Schematic

SUNBELT CONTROLS
4511 Willow Road
Suite 4
Pleasanton, CA 94588

PROJECT:
L-1201 Science Building BAS
2700 E Leland Rd.
Pittsburg, CA 94565

FILENAME: 17 - VAVs

REV	DESCRIPTION	DATE	BY
		0	
		0	
		0	
		0	
0	As-Built	10/11/2023	NS

DRAWING NAME: RH VAV Wiring & Schematic

CONTRACT NO: 80860787 | **SE:** | **DE:** NS | **PR:**

DRAWING NO.: 17.1

RH VAV w/ CO2 Wiring & Schematic
Typical of 20

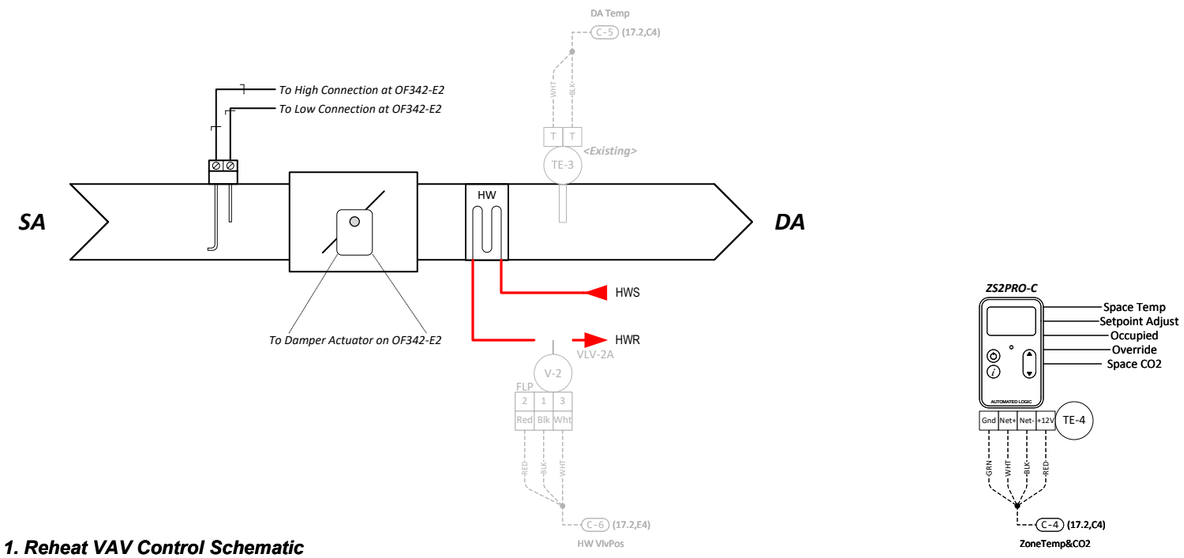

1. Reheat VAV Control Schematic

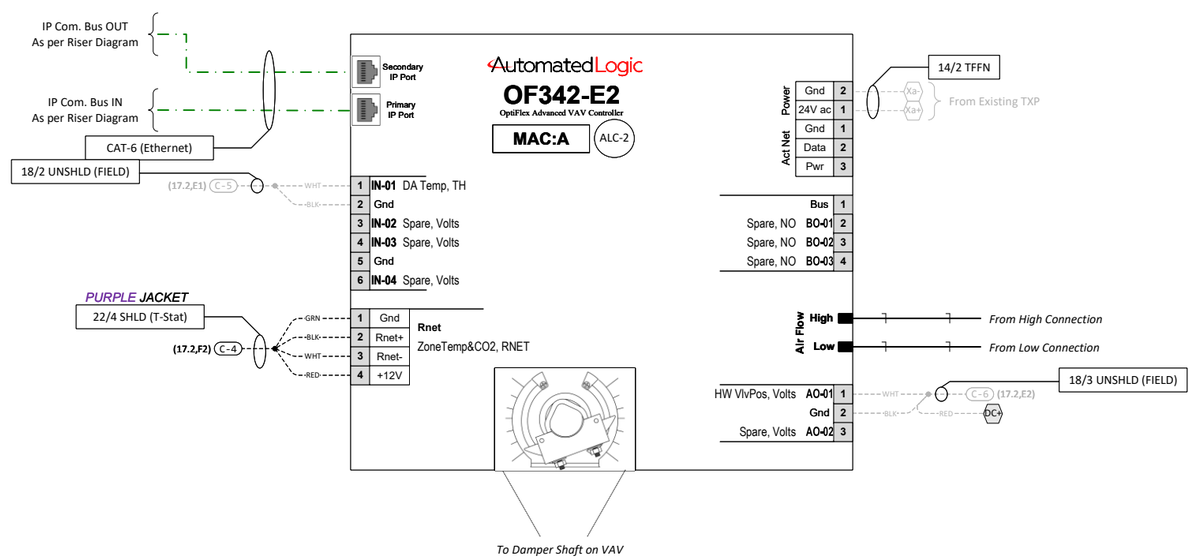

2. Reheat VAV Wiring Schematic

SUNBELT CONTROLS
4511 Willow Road
Suite 4
Pleasanton, CA 94588

PROJECT:
L-1201 Science Building BAS
2700 E Leland Rd.
Pittsburg, CA 94565

FILENAME: 17 - VAVs

REV	DESCRIPTION	DATE	BY
		0	
		0	
		0	
		0	
0	As-Built	10/11/2023	NS

DRAWING NAME: RH VAV w/ CO2 Wiring & Schematic

CONTRACT NO: 80860787 | **SE:** | **DE: NS** | **PR:**

DRAWING NO.: 17.2

RH VAV 2.4 Wiring & Schematic

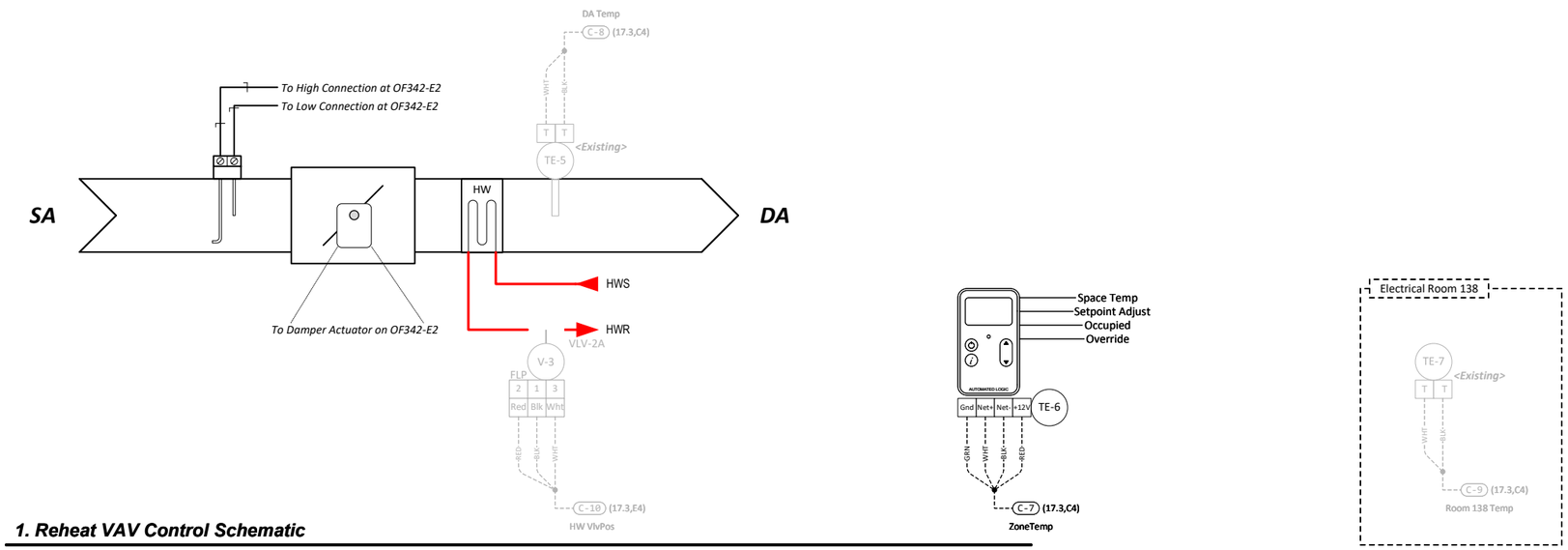

1. Reheat VAV Control Schematic

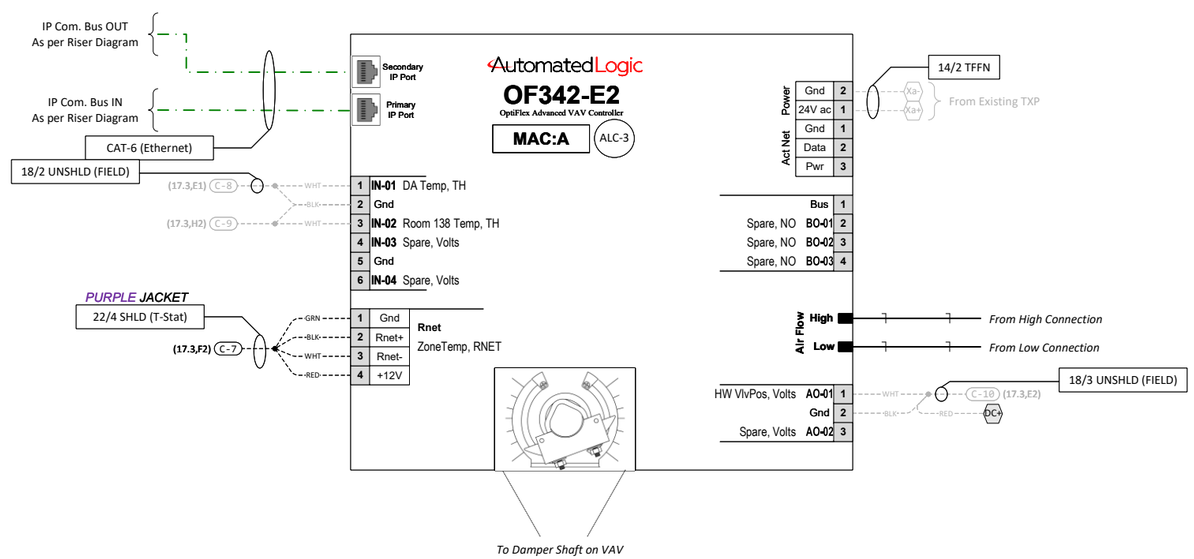

2. Reheat VAV Wiring Schematic

SUNBELT CONTROLS
4511 Willow Road
Suite 4
Pleasanton, CA 94588

PROJECT:
L-1201 Science Building BAS
2700 E Leland Rd.
Pittsburg, CA 94565

FILENAME: 17 - VAVs

REV	DESCRIPTION	DATE	BY
		0	
		0	
		0	
		0	
0	As-Built	10/11/2023	NS

DRAWING NAME: RH VAV 2.4 Wiring & Schematic

CONTRACT NO: 80860787 | **SE:** | **DE: NS** | **PR:**

DRAWING NO.: 17.3

RH VAV 2.33 Wiring & Schematic

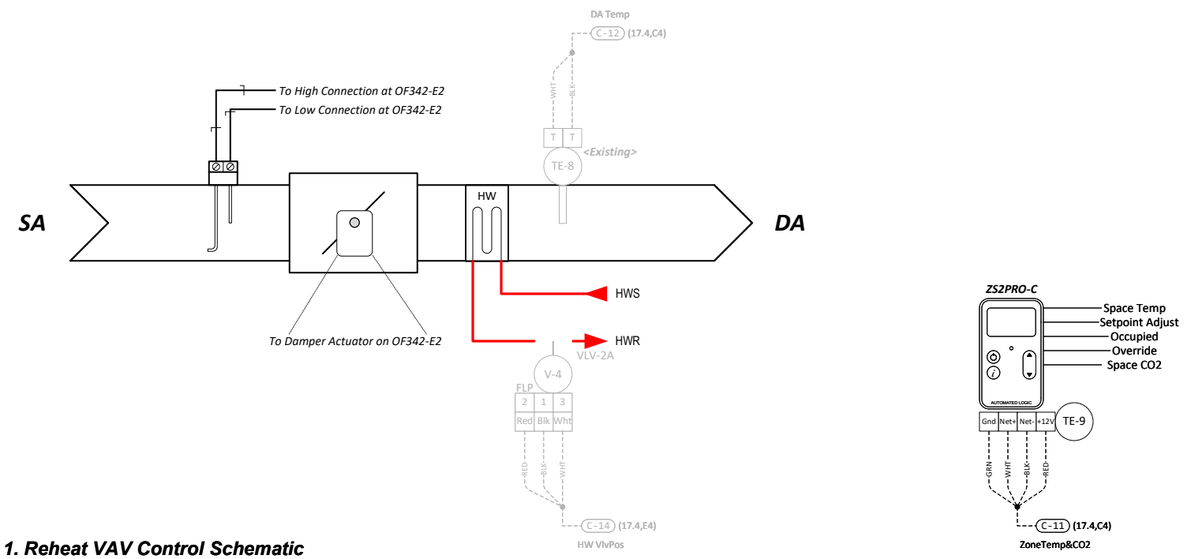

1. Reheat VAV Control Schematic

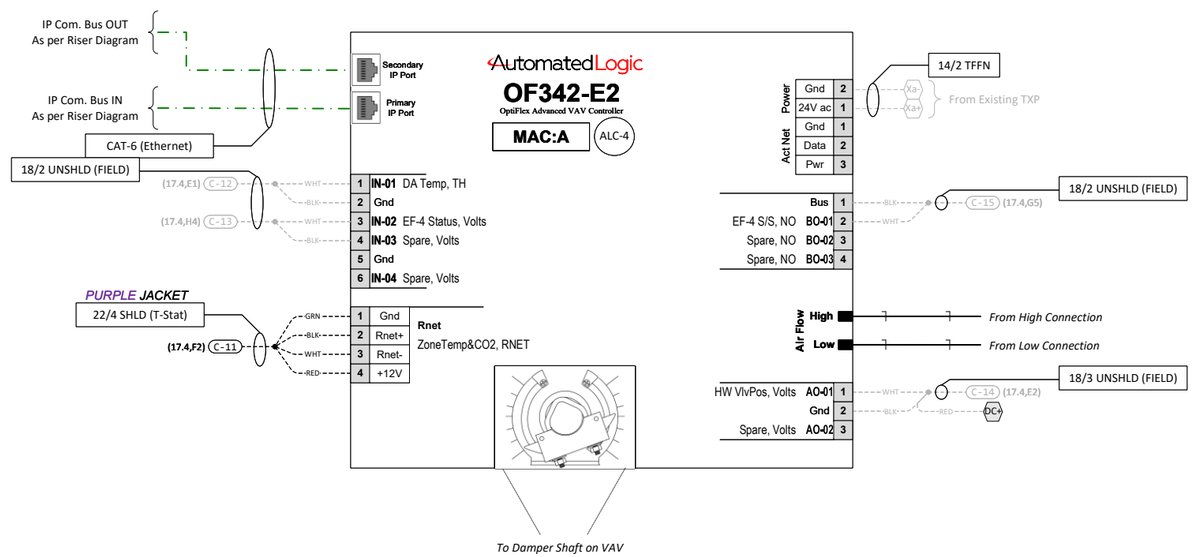

2. Reheat VAV Wiring Schematic

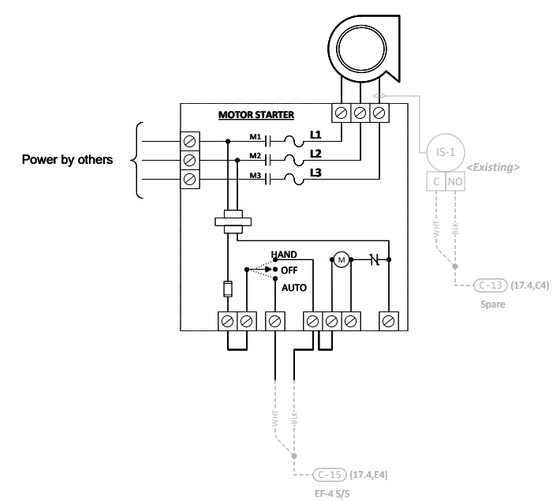

3. EF-4 Starter Wiring Schematic

SUNBELT CONTROLS
4511 Willow Road
Suite 4
Pleasanton, CA 94588

PROJECT:
L-1201 Science Building BAS
2700 E Leland Rd.
Pittsburg, CA 94565

FILENAME: 17 - VAVs

REV	DESCRIPTION	DATE	BY
		0	
		0	
		0	
		0	
0	As-Built	10/11/2023	NS

DRAWING NAME: RH VAV 2.33 Wiring & Schematic

CONTRACT NO: 80860787 | **SE:** | **DE: NS** | **PR:**

DRAWING NO.: 17.4

VAV Field Parts Tag Schedule

Field Bill of Materials w/ Tags

Tag	Part Number	Product Description	Manufacturer	Panel Or Field	Quantity
ALC-1	OF342-E2	Advanced VAV Controller, Actuator, Rnet, 4UI, 2AO, 3DO	Automated Logic	F	35
ALC-2	OF342-E2	Advanced VAV Controller, Actuator, Rnet, 4UI, 2AO, 3DO	Automated Logic	F	20
ALC-3	OF342-E2	Advanced VAV Controller, Actuator, Rnet, 4UI, 2AO, 3DO	Automated Logic	F	1
ALC-4	OF342-E2	Advanced VAV Controller, Actuator, Rnet, 4UI, 2AO, 3DO	Automated Logic	F	1
TE-2	ZS2P-ALC	ZS2 Pro Space Temp Sensor w/LCD, Rnet, SP Adj, Ovrd	Automated Logic	F	35
TE-4	ZS2P-C-ALC	ZS2 Pro Space Temp Sensor w/LCD, CO2, Rnet, SP Adj, Ovrd	Automated Logic	F	20
TE-6	ZS2P-ALC	ZS2 Pro Space Temp Sensor w/LCD, Rnet, SP Adj, Ovrd	Automated Logic	F	1
TE-9	ZS2P-C-ALC	ZS2 Pro Space Temp Sensor w/LCD, CO2, Rnet, SP Adj, Ovrd	Automated Logic	F	1
V-1	Existing Valve	Existing Valve	Existing Valve	F	35
V-2	Existing Valve	Existing Valve	Existing Valve	F	20
V-3	Existing Valve	Existing Valve	Existing Valve	F	1
V-4	Existing Valve	Existing Valve	Existing Valve	F	1

SUNBELT CONTROLS
4511 Willow Road
Suite 4
Pleasanton, CA 94588

PROJECT:
L-1201 Science Building BAS
2700 E Leland Rd.
Pittsburg, CA 94565

FILENAME: 17 - VAVs

REV	DESCRIPTION	DATE	BY
		0	
		0	
		0	
		0	
0	As-Built	10/11/2023	NS

DRAWING NAME:
VAV Field Parts Tag Schedule

CONTRACT NO: 80860787 | SE: | DE: NS | PR:

DRAWING NO.: 17.5

TXP-1 Wiring Detail

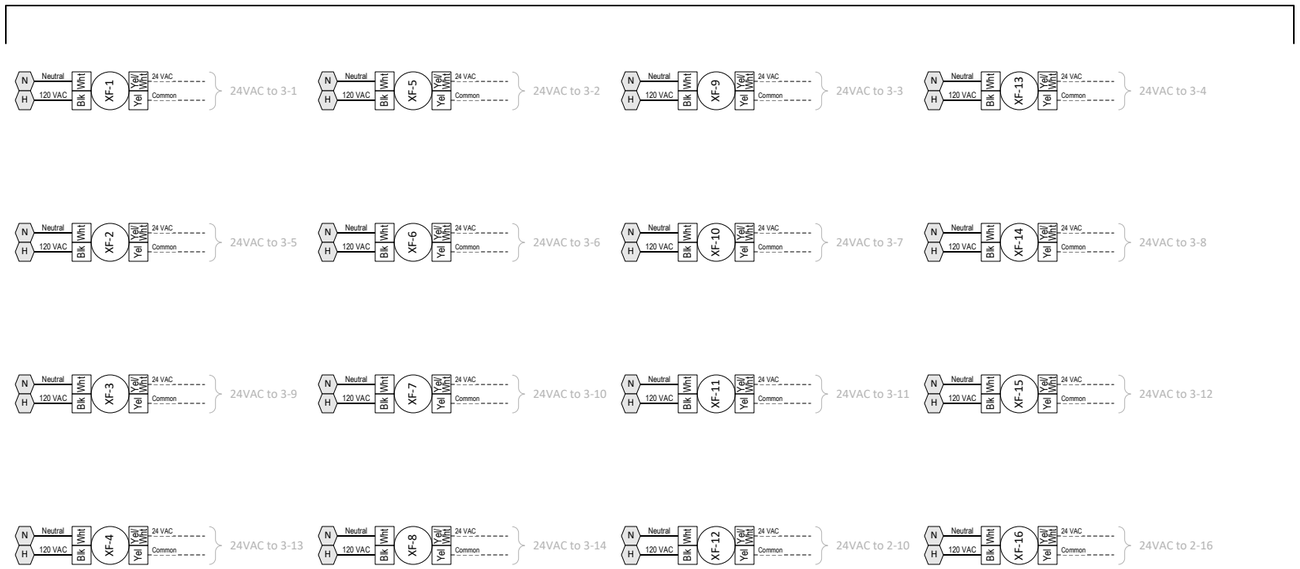

SUNBELT CONTROLS
4511 Willow Road
Suite 4
Pleasanton, CA 94588

PROJECT:
L-1201 Science Building BAS
2700 E Leland Rd.
Pittsburg, CA 94565

FILENAME: 18 - TXPs

REV	DESCRIPTION	DATE	BY
		0	
		0	
		0	
		0	
0	As-Built	10/11/2023	NS

DRAWING NAME:
TXP-1 Wiring Detail

CONTRACT NO: 80860787 | SE: | DE: NS | PR:

DRAWING NO.: 18.1

TXP-2 Wiring Detail

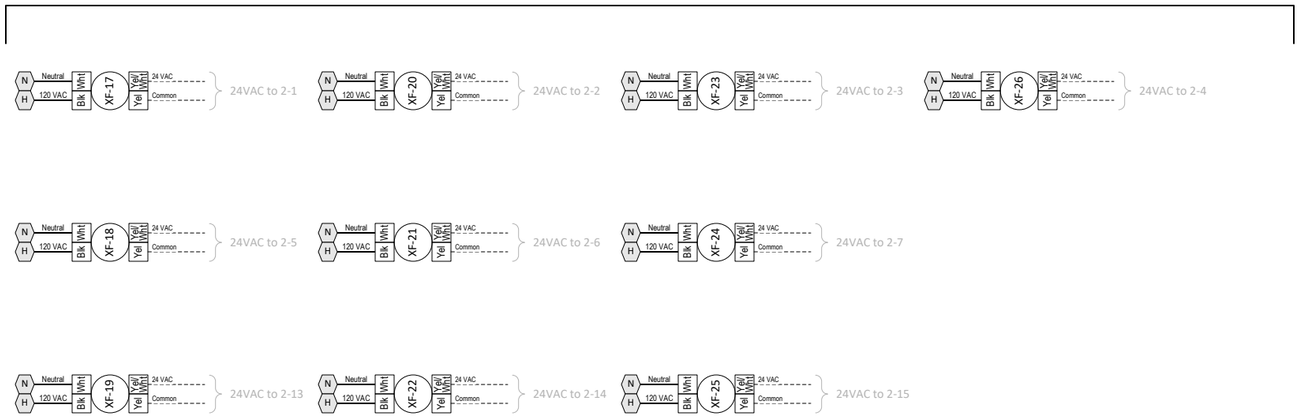

SUNBELT CONTROLS
4511 Willow Road
Suite 4
Pleasanton, CA 94588

PROJECT:
L-1201 Science Building BAS
2700 E Leland Rd.
Pittsburg, CA 94565

FILENAME: 18 - TXPs

REV	DESCRIPTION	DATE	BY
		0	
		0	
		0	
		0	
0	As-Built	10/11/2023	NS

DRAWING NAME:
TXP-2 Wiring Detail

CONTRACT NO: 80860787 | SE: | DE: NS | PR:

DRAWING NO.: 18.2

TXP-3 Wiring Detail

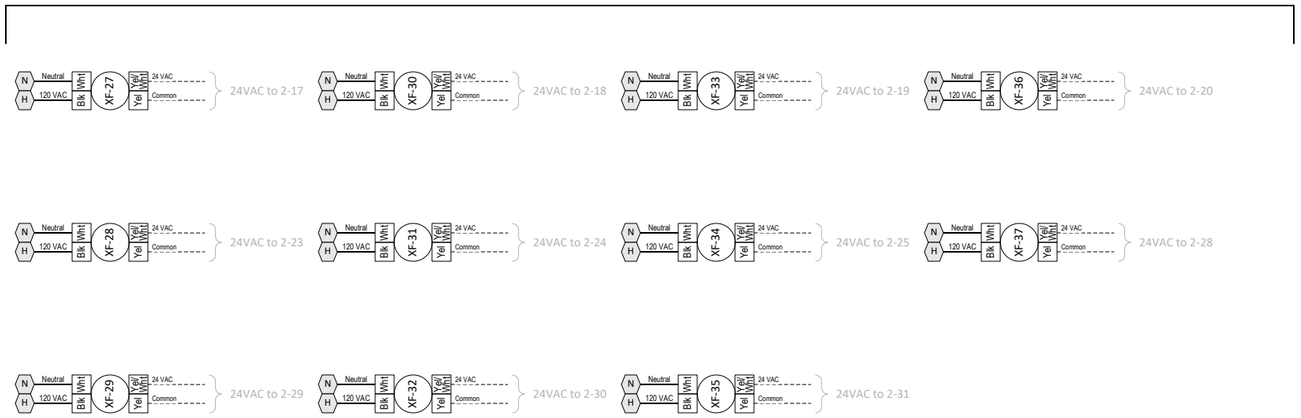

SUNBELT CONTROLS
4511 Willow Road
Suite 4
Pleasanton, CA 94588

PROJECT:
L-1201 Science Building BAS
2700 E Leland Rd.
Pittsburg, CA 94565

FILENAME: 18 - TXPs

REV	DESCRIPTION	DATE	BY
		0	
		0	
		0	
		0	
0	As-Built	10/11/2023	NS

DRAWING NAME:
TXP-3 Wiring Detail

CONTRACT NO: 80860787 | SE: | DE: NS | PR:

DRAWING NO.: 18.3

TXP-4 Wiring Detail

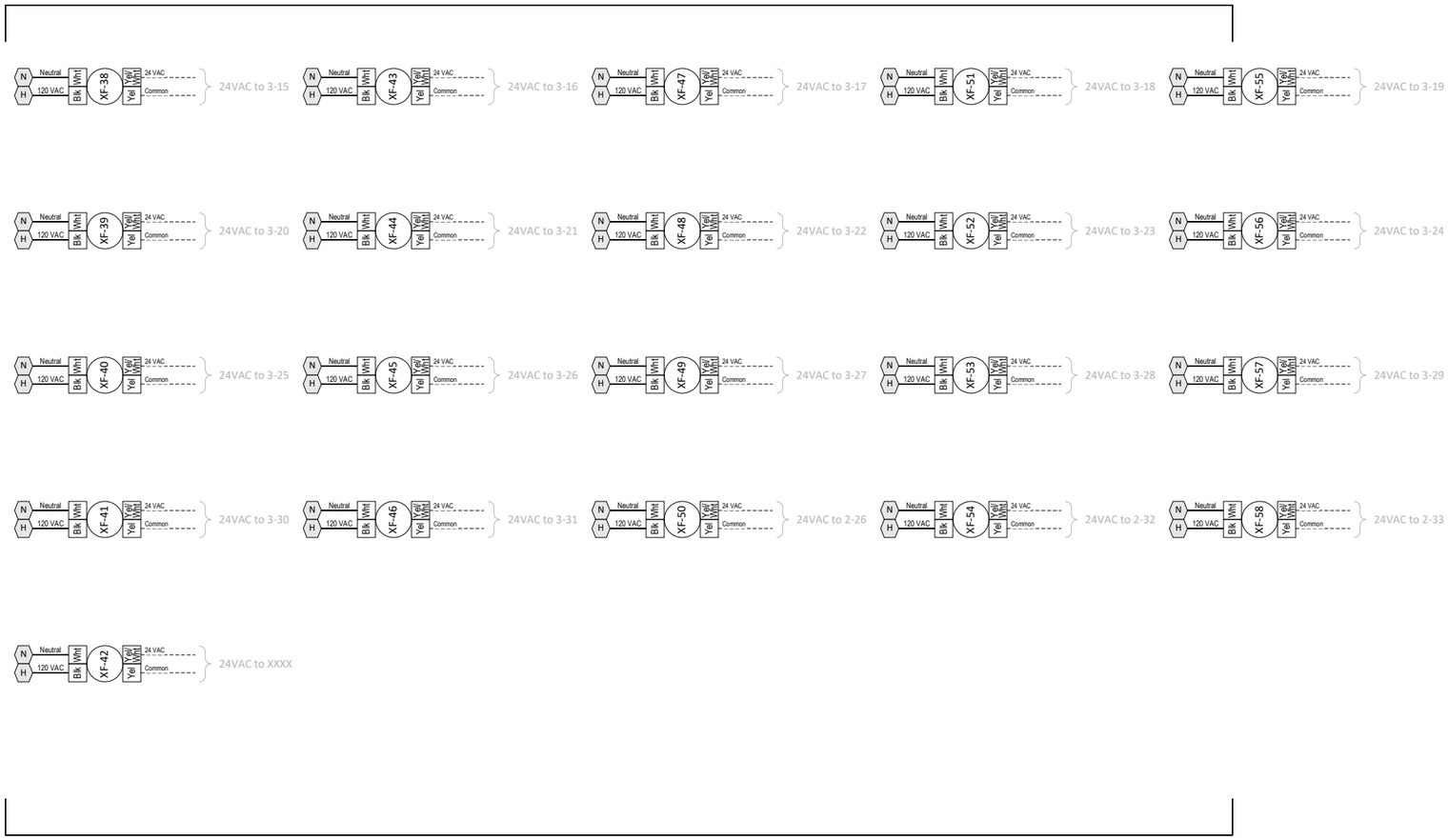

SUNBELT CONTROLS
4511 Willow Road
Suite 4
Pleasanton, CA 94588

PROJECT:
L-1201 Science Building BAS
2700 E Leland Rd.
Pittsburg, CA 94565

FILENAME: 18 - TXPs

REV	DESCRIPTION	DATE	BY
		0	
		0	
		0	
		0	
0	As-Built	10/11/2023	NS

DRAWING NAME:
TXP-4 Wiring Detail

CONTRACT NO: 80860787 | SE: | DE: NS | PR:

DRAWING NO.: 18.4

TXPs Parts Tag Schedule

Bill of Materials w/ Tags

Tag	Part Number	Product Description	Manufacturer	Panel Or Field	Quantity
XF-1	TR100VA001	Xfmr 96VA,120:24,Ckt Brkr, Class 2	Functional Devices	P	1
XF-10	TR100VA001	Xfmr 96VA,120:24,Ckt Brkr, Class 2	Functional Devices	P	1
XF-11	TR100VA001	Xfmr 96VA,120:24,Ckt Brkr, Class 2	Functional Devices	P	1
XF-12	TR100VA001	Xfmr 96VA,120:24,Ckt Brkr, Class 2	Functional Devices	P	1
XF-13	TR100VA001	Xfmr 96VA,120:24,Ckt Brkr, Class 2	Functional Devices	P	1
XF-14	TR100VA001	Xfmr 96VA,120:24,Ckt Brkr, Class 2	Functional Devices	P	1
XF-15	TR100VA001	Xfmr 96VA,120:24,Ckt Brkr, Class 2	Functional Devices	P	1
XF-16	TR100VA001	Xfmr 96VA,120:24,Ckt Brkr, Class 2	Functional Devices	P	1
XF-17	TR100VA001	Xfmr 96VA,120:24,Ckt Brkr, Class 2	Functional Devices	P	1
XF-18	TR100VA001	Xfmr 96VA,120:24,Ckt Brkr, Class 2	Functional Devices	P	1
XF-19	TR100VA001	Xfmr 96VA,120:24,Ckt Brkr, Class 2	Functional Devices	P	1
XF-2	TR100VA001	Xfmr 96VA,120:24,Ckt Brkr, Class 2	Functional Devices	P	1
XF-20	TR100VA001	Xfmr 96VA,120:24,Ckt Brkr, Class 2	Functional Devices	P	1
XF-21	TR100VA001	Xfmr 96VA,120:24,Ckt Brkr, Class 2	Functional Devices	P	1
XF-22	TR100VA001	Xfmr 96VA,120:24,Ckt Brkr, Class 2	Functional Devices	P	1
XF-23	TR100VA001	Xfmr 96VA,120:24,Ckt Brkr, Class 2	Functional Devices	P	1
XF-24	TR100VA001	Xfmr 96VA,120:24,Ckt Brkr, Class 2	Functional Devices	P	1
XF-25	TR100VA001	Xfmr 96VA,120:24,Ckt Brkr, Class 2	Functional Devices	P	1
XF-26	TR100VA001	Xfmr 96VA,120:24,Ckt Brkr, Class 2	Functional Devices	P	1
XF-27	TR100VA001	Xfmr 96VA,120:24,Ckt Brkr, Class 2	Functional Devices	P	1
XF-28	TR100VA001	Xfmr 96VA,120:24,Ckt Brkr, Class 2	Functional Devices	P	1
XF-29	TR100VA001	Xfmr 96VA,120:24,Ckt Brkr, Class 2	Functional Devices	P	1
XF-3	TR100VA001	Xfmr 96VA,120:24,Ckt Brkr, Class 2	Functional Devices	P	1
XF-30	TR100VA001	Xfmr 96VA,120:24,Ckt Brkr, Class 2	Functional Devices	P	1
XF-31	TR100VA001	Xfmr 96VA,120:24,Ckt Brkr, Class 2	Functional Devices	P	1
XF-32	TR100VA001	Xfmr 96VA,120:24,Ckt Brkr, Class 2	Functional Devices	P	1
XF-33	TR100VA001	Xfmr 96VA,120:24,Ckt Brkr, Class 2	Functional Devices	P	1
XF-34	TR100VA001	Xfmr 96VA,120:24,Ckt Brkr, Class 2	Functional Devices	P	1
XF-35	TR100VA001	Xfmr 96VA,120:24,Ckt Brkr, Class 2	Functional Devices	P	1
XF-36	TR100VA001	Xfmr 96VA,120:24,Ckt Brkr, Class 2	Functional Devices	P	1
XF-37	TR100VA001	Xfmr 96VA,120:24,Ckt Brkr, Class 2	Functional Devices	P	1
XF-38	TR100VA001	Xfmr 96VA,120:24,Ckt Brkr, Class 2	Functional Devices	P	1
XF-39	TR100VA001	Xfmr 96VA,120:24,Ckt Brkr, Class 2	Functional Devices	P	1
XF-4	TR100VA001	Xfmr 96VA,120:24,Ckt Brkr, Class 2	Functional Devices	P	1
XF-40	TR100VA001	Xfmr 96VA,120:24,Ckt Brkr, Class 2	Functional Devices	P	1
XF-41	TR100VA001	Xfmr 96VA,120:24,Ckt Brkr, Class 2	Functional Devices	P	1
XF-42	TR100VA001	Xfmr 96VA,120:24,Ckt Brkr, Class 2	Functional Devices	P	1
XF-43	TR100VA001	Xfmr 96VA,120:24,Ckt Brkr, Class 2	Functional Devices	P	1
XF-44	TR100VA001	Xfmr 96VA,120:24,Ckt Brkr, Class 2	Functional Devices	P	1
XF-45	TR100VA001	Xfmr 96VA,120:24,Ckt Brkr, Class 2	Functional Devices	P	1
XF-46	TR100VA001	Xfmr 96VA,120:24,Ckt Brkr, Class 2	Functional Devices	P	1
XF-47	TR100VA001	Xfmr 96VA,120:24,Ckt Brkr, Class 2	Functional Devices	P	1
XF-48	TR100VA001	Xfmr 96VA,120:24,Ckt Brkr, Class 2	Functional Devices	P	1
XF-49	TR100VA001	Xfmr 96VA,120:24,Ckt Brkr, Class 2	Functional Devices	P	1
XF-5	TR100VA001	Xfmr 96VA,120:24,Ckt Brkr, Class 2	Functional Devices	P	1
XF-50	TR100VA001	Xfmr 96VA,120:24,Ckt Brkr, Class 2	Functional Devices	P	1
XF-51	TR100VA001	Xfmr 96VA,120:24,Ckt Brkr, Class 2	Functional Devices	P	1
XF-52	TR100VA001	Xfmr 96VA,120:24,Ckt Brkr, Class 2	Functional Devices	P	1
XF-53	TR100VA001	Xfmr 96VA,120:24,Ckt Brkr, Class 2	Functional Devices	P	1
XF-54	TR100VA001	Xfmr 96VA,120:24,Ckt Brkr, Class 2	Functional Devices	P	1
XF-55	TR100VA001	Xfmr 96VA,120:24,Ckt Brkr, Class 2	Functional Devices	P	1
XF-56	TR100VA001	Xfmr 96VA,120:24,Ckt Brkr, Class 2	Functional Devices	P	1
XF-57	TR100VA001	Xfmr 96VA,120:24,Ckt Brkr, Class 2	Functional Devices	P	1
XF-58	TR100VA001	Xfmr 96VA,120:24,Ckt Brkr, Class 2	Functional Devices	P	1
XF-6	TR100VA001	Xfmr 96VA,120:24,Ckt Brkr, Class 2	Functional Devices	P	1
XF-7	TR100VA001	Xfmr 96VA,120:24,Ckt Brkr, Class 2	Functional Devices	P	1
XF-8	TR100VA001	Xfmr 96VA,120:24,Ckt Brkr, Class 2	Functional Devices	P	1
XF-9	TR100VA001	Xfmr 96VA,120:24,Ckt Brkr, Class 2	Functional Devices	P	1

SUNBELT CONTROLS
4511 Willow Road
Suite 4
Pleasanton, CA 94588

PROJECT:
L-1201 Science Building BAS
2700 E Leland Rd.
Pittsburg, CA 94565

FILENAME: 18 - TXPs

REV	DESCRIPTION	DATE	BY
		0	
		0	
		0	
		0	
0	As-Built	10/11/2023	NS

DRAWING NAME:
TXPs Parts Tag Schedule

CONTRACT NO: 80860787 | SE: | DE: NS | PR:

DRAWING NO.: 18.5

ONICON F-1200 & FB-1200 DUAL TURBINE FLOW METER

ONICON F-1200 & FB-1200 SERIES DUAL TURBINE FLOW METER

STANDARD MOUNTING INSTRUCTIONS

BEFORE BEGINNING, CLEAN THE EXTERNAL SURFACES OF ALL PIPES AT THE INSTALLATION SITES SO THEY ARE FREE OF DEBRIS OR FOREIGN MATTER. THE ENTIRE SYSTEM MUST HAVE BEEN FLUSHED BY THE MECHANICAL CONTRACTOR S0 THAT IT IS FREE OF ANY FLUX, SOLDER, PIPE AND TUBE CUTTINGS, WELDING SLAG AND ANY OTHER FREE MOVING PARTICLES.

WORKING ENVIRONMENT
THE F-1200 SERIES INSERTION FLOW METERS ARE DESIGNED FOR INSTALLATION AND USE IN TYPICAL INDUSTRIAL ENVIRONMENTS THAT ARE FREE OF CORROSIVE LIQUIDS AND FUMES, DIRECT LIQUID EXPOSURE OR HEAVY CONDENSATION, TEMPERATURE EXTREMES AND VIBRATIONS.

THE OPERATING AMBIENT AIR TEMPERATURE RANGE IS -5 TO 160 DEGREES FAHRENHEIT WITH WEATHERTIGHT ELECTRONICS ENCLOSURE.

THE ELECTRICAL POWER SHOULD BE RELATIVELY CLEAN, FREE OF HIGH FREQUENCY NOISE AND LARGE VOLTAGE TRANSIENTS, AND PROTECTED FROM POWER SURGES AND BROWN OUTS.

SITE SELECTION
FOR DUAL TURBINE METERS USE 10 STRAIGHT PIPE DIAMETERS UPSTREAM AND DOWNSTREAM. SINGLE TURBINE METERS REQUIRE 20 STRAIGHT PIPE DIAMETERS UPSTREAM AND 10 STRAIGHT PIPE DIAMETERS DOWNSTREAM. NEITHER TYPE OF FLOW METER SHOULD BE INSTALLED IN OR NEAR ELBOWS OR TEES.

CHOOSE A SECTION OF PIPE THAT IS WELL SUPPORTED AND FREE OF HARMONIC MOTION AND VIBRATION.

THE LOCATION MUST ALLOW CONVENIENT ACCESS AND CLEARANCE FOR EASY REMOVAL FOR CLEANING, REPLACEMENT, AND PREVENTIVE MAINTENANCE.

PLACE THE FLOW METER SO IT CAN BE USED WITH ONICON'S STANDARD HOT TAP ADAPTER AND A VALVE NIPPLE ASSEMBLY.

A FULL 1" OPENING IS REQUIRED TO CLEAR THE TURBINE ASSEMBLY. MAKE SURE THAT YOUR VALVES AND FITIINGS ARE FULL PORT AND AT LEAST 1" IN ACTUAL INTERNAL DIAMETER.

LIMIT THE OVERALL HEIGHT FROM THE PIPE'S OUTSIDE DIAMETER TO THE TOP OF THE VALVE TO 5.5" TO 6".
THE FLOW METER MUST ALWAYS BE PERPENDICULAR TO THE PIPE.

PLUMBING INSTALLATION
ALL PLUMBING INSTALLATIONS SHOULD BE DONE ONLY IN PIPES WHICH HAVE READILY ACCESSIBLE SHUT-OFF VALVES SO THE FLOW MAY BE TURNED OFF IN CASE OF AN EMERGENCY. ONCE YOU CHOOSETHE INSTALLATION SITE FOR THE FLOW METER, CLEAN THE MOUNTING SURFACE. NEXT, RELIEVE ALL PRESSURE WITHIN THE FLUID SYSTEM AND REDUCE THE FLUID LEVEL TO THE HEIGHT WHERE NO LIQUID WILL ESCAPE WHEN THE INSTALLATION HOLE IS DRILLED IN THE PIPE. TO USE THE ONICON HOT TAP FEATURE, THE FLOW METER MUST BE INSTALLED THROUGH AN ISOLATION VALVE.

DRAINED, NON-PRESSURIZED SYSTEM
THE ACCESS HOLE IS DRILLED (1" MINIMUM) PRIOR TO INSTALLATION OF THE 1" NPT BRANCH OUTLET, CLOSE NIPPLE AND FULL PORT BALL VALVE. ONCE THE ISOLATION VALVE IS INSTALLED, THE PIPING SYSTEM CAN BE FLUSHED AND PRESSURIZED. THE FLOW METER CAN NOW BE INSERTED OR REMOVED BY HAND WITHOUT HAVING TO DRAIN THE SYSTEM AGAIN.

HOT TAP INSTALLATION
IN THIS CASE, A 1-1/4" BRANCH OUTLET, CLOSE NIPPLE AND 1-1/4" FULL PORT BALL VALVE ARE INSTALLED FIRST. THEN, A HOT TAP DRILLING APPARATUS CAN BE USED TO DRILL A 1" DIAMETER HOLE THROUGH THE VALVE, WITHOUT SHUTTING DOWN OR DRAINING THE PIPE.

WHEN INSTALLATIONS ARE MADE IN SMALL PIPE SIZES, A TEE MAY BE AVAILABLE. HOWEVER, THE INSIDE DIAMETER OF MOST TEES IS LARGER THAN THAT OF THE PIPE. ALSO, A TEE CREATES MORE TURBULENCE THAN A SMALL DRILLED HOLE. AFTER FITIING THE NECESSARY PLUMBING HARDWARE, FLUSH THE ENTIRE SYSTEM SO THAT IT IS FREE OF FLUX, SOLDER, AND SLAG. PREPARE TO INSTALL THE FLOW METER BY LOOSENING THE CLAMPING NUT AND WITHDRAWING THE TURBINE ASSEMBLY ENTIRELY INTO THE HOT TAP ADAPTER. NEXT, THREAD THE ADAPTER INTO THE BALL VALVE USING APASTE TYPE THREAD SEALANT. DO NOT USE TEFLON TAPE BECAUSE TORN STRANDS OF THE TAPE MAY WIND AROUND THE TURBINE, SLOWING DOWN OR EVEN STOPPING THE TURBINE ROTOR. CHECK THE INSTALLATION FOR LEAKS BY SLIGHTLY OPENING THE BALL VALVE UNDER THE HOT TAP ADAPTER. AN "O" RING IN THE ADAPTER SEALS THE METER'S STEM AGAINST LEAKAGE. IF THERE ARE ANY LEAKS AROUND THE CLAMPING NUT OR STEM, DO NOT ATIEMPT TO STOP THE LEAKAGE BY OVERTIGHTENING THE CLAMPING NUT. DAMAGE TO THIS NUT OR THE CLAMPING RING UNDER THE NUT MAY PREVENT THE ASSEMBLY FROM PROPERLY HOLDING THE METER IN THE PIPE. THE CLAMPING NUT IS NOT PART OF THE SEALING MECHANISM. ANY LEAKS IN THIS AREA INDICATE THE "O" RING IS NOT SEALING PROPERLY AND YOU MUST CONTACT THE FACTORY FOR ASSISTANCE.

WHEN YOU ARE READY TO REFILL THE SYSTEM, MAKE SURE THAT ALL LINES ARE FILLED WITH WATER BEFORE INSERTING THE TURBINE INTO THE STREAM. IF THE LINES ARE NOT FILLED, AIR MAY INTERRUPT THE FLOWING STREAM AND DAMAGE THE TURBINE ASSEMBLY. A GREATER DANGER IS THAT IF THIS IS A HOT WATER SYSTEM, SOME WATER MAY FLASH INTO STEAM AND EXCEED THE HIGH TEMPERATURE LIMIT FOR THE TURBINE AND ITS MECHANICAL ASSEMBLY. THE ASSEMBLY COULD FAIL TO HOLD THE PRESSURE AND ALLOW STEAM AND HOT WATER TO ESCAPE CAUSING SERIOUS INJURY OR DEATH.

INSERTION OF THE METER
REFER TO INSERTION DEPTH DETAIL
1. PIERCE THE INSULATION WITH THE DEPTH GAGE UNTIL THE TIP TOUC.HES THE PIPE.
2. OPEN THE VALVE COMPLETELY, LOOSEN THE LOCK NUT, AND INSERT THE METER UNTIL THE BOTTOM OF THE ELECTRONICS CASE TOUCHES THE EYE OF THE DEPTH GAGE.
3. ALIGN THE ARROW ON THE METER WITH THE FLOW DIRECTION.
4. TIGHTEN THE LOCK NUT.

REMOVAL OF THE METER
CAUTION - THE METER MAY BE UNDER HIGH PRESSURE. CARE MUST BE TAKEN TO ENSURE THE METER IS SUPPORTED AGAINST THE PIPE PRESSURE BEFORE THE POSITION CLAMPING NUT IS LOOSENED. FAILURE TO DO THIS WILL ALLOW THE PRESSURE TO SUDDENLY AND RAPIDLY FORCE THE METER FROM THE PIPE. THE HAND EFFORT TO SUPPORT THE METER WILL BE 0.11 TIMES THE PIPE PRESSURE. IF THE METER IS NOT SUPPORTED PROPERLY, DAMAGE TO THE METER OR SERIOUS PERSONAL INJURYMAY RESULT.

PRIOR TO REMOVAL OF THE METER, MAKE SURE YOU ARE STANDING ON A SECURE PLATFORM AND HAVE BOTH HANDS AVAILABLE TO MANIPULATE THE FLOW METER.

FIRST SUPPORT THE FLOW METER AGAINST THE PIPE PRESSURE BY HOLDING THE CIRCUIT BOARD ENCLOSURE FIRMLY BY HAND BEFORE LOOSENING THE POSITION CLAMPING NUT. SLOWLY LOOSEN THE POSITION CLAMPING NUT AND CAREFULLY AND SLOWLY ALLOW THE PRESSURE TO FORCE THE METER OUT OF THE PIPE. AFTER THE METER IS COMPLETELY WITHDRAWN, YOU MAY CLOSE THE ISOLATION BALL VALVE. TO AVOID DAMAGE TO THE METER, GENTLY ROTATE THE METER BY TWISTING THE CIRCUIT BOARD ENCLOSURE BACK AND FORTH WHILE YOU SLOWLY CLOSE THE VALVE. AFTER THE VALVE IS COMPLETELY CLOSED, YOU CAN SAFELY UNSCREW THE HOT TAP ADAPTER FROM THE VALVE.

NOTE: FLOW METER FEATURES A NON-ISOLATED OUTPUT. THIS IS NOT A LOOP POWERED DEVICE. DO NOT CONNECT POWER TO ANY OF THE SIGNAL OUTPUT WIRES.

HOT TAP INSTALLATION DETAIL
SERIES F-1100 & F-1200 FLOW METERS

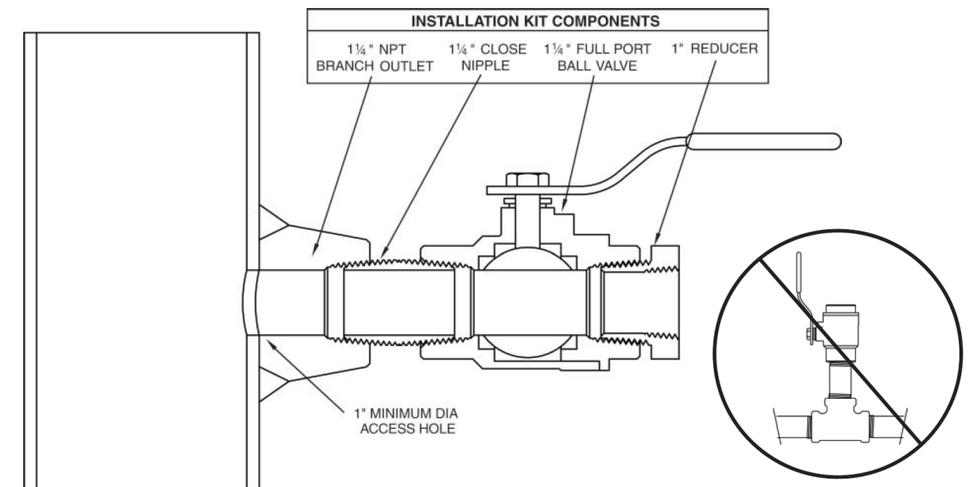

Do not substitute threaded tees for the welded branch outlet. Contact ONICON if you need installation hardware for threaded pipe.

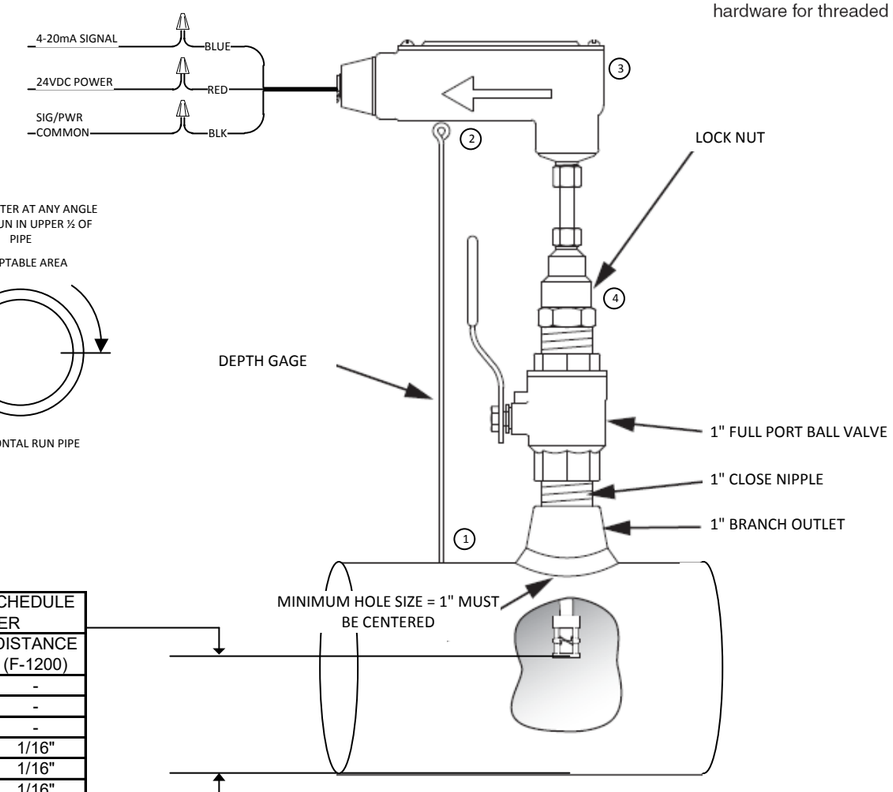

INSERTION DISTANCE SCHEDULE SIZES 4" & SMALLER		
PIPE SIZE (INCHES)	DISTANCE (F-1100)	DISTANCE (F-1200)
1-1/4"	1/16"	-
1-1/2"	1/16"	-
2	1/8"	-
2-1/2"	1/4"	1/16"
3	1/5"	1/16"
3-1/2"	5/8"	1/16"
4	13/16"	1/8"

IDEC GENERAL PURPOSE RELAYS

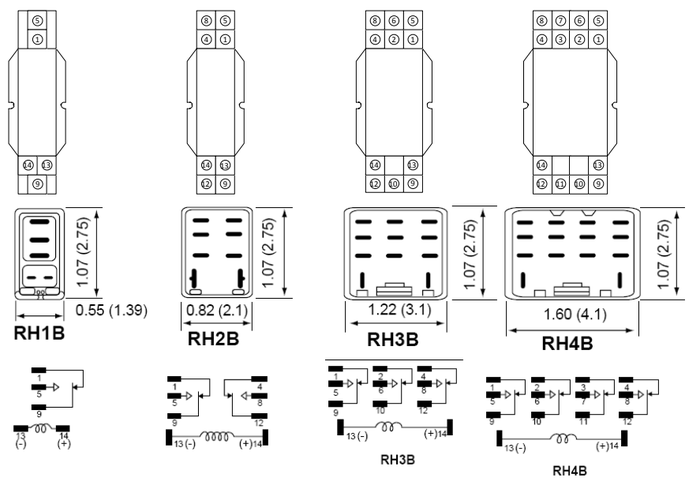

PANEL MOUNTING INSTRUCTIONS

SNAP THE RELAY BASE ONTO THE DIN RAIL IN THE DESIRED LOCATION. PART NUMBER FOR 35 mm DIN RAIL: DIN-3F OR DIN 6F (3 OR 6 FOOT LENGTHS RESPECTIVELY).

SURFACE MOUNTING INSTRUCTIONS

FASTEN THE RELAY BASE TO THE DESIRED LOCATION USING THE (2) SCREW HOLES IN THE RELAY BASE.

OUTDOOR AIR TEMPERATURE AND HUMIDITY SENSOR

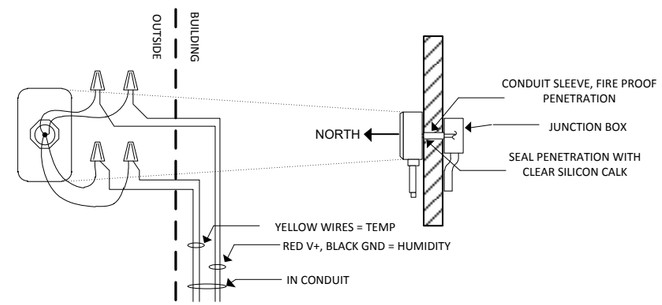

MOUNTING INSTRUCTIONS

1. A SMALL WEEP HOLE (1/8" OR LESS) MUST BE DRILLED INTO THE BOTTOM (PROBE) SIDE OF THE ENCLOSURE TO ALLOW ANY CONDENSATION WITHIN THE ENCLOSURE TO ESCAPE. CAUTION MUST BE TAKEN TO AVOID NICKING THE LEAD WIRES AND ANY ELECTRICAL CONNECTIONS WHEN DRILLING THE WEEP HOLE.
2. ATTACH THE MOUNTING TABS TO OPPOSITE CORNERS OF THE BELL BOX WITH SELF TAPPING SCREWS.
3. MOUNT THE OUTSIDE AIR UNIT OUT OF DIRECT SUNLIGHT WITH THE PVC SENSOR COVER POINTING DOWN. MOUNT THE SENSOR ON THE WALL WITH THE NORTHMOST EXPOSURE.
4. TERMINATE THE UNIT AS SHOWN ABOVE. BE SURE TO INCORPORATE A "J-LOOP" INTO THE TERMINATION. A "J-LOOP" IS FORMED BY POINTING THE WIRE NUTS OF A TERMINATION UP CREATING A "J" IN THE CABLE IN ORDER TO REDUCE THE LIKELYHOOD OF CONDENSATION COLLECTING IN THE WIRE NUT.
5. ATTACH THE COVER. MAKE SURE THE GASKET SEALS ON ALL SIDES. **DO NOT OVER TIGHTEN THE COVER.** IF OVERTIGHTENED, THE BELL BOX WILL CUT THE GASKET AND ALLOW MOISTURE TO ENTER THE ENCLOSURE.
6. SEAL ALL CONDUIT HOLES WITH THE PLUGS PROVIDED AND AN APPROPRIATE SILICON SEALANT.

NOTE: IN A WALL MOUNT APPLICATION, THE WALL TEMPERATURE AND THE TEMPERATURE OF THE AIR CONTAINED WITHIN THE WALL CAVITY CAN CAUSE ERRONEOUS READINGS. MOREOVER, THE MIXING OF ROOM AIR AND AIR FROM WITHIN THE WALL CAVITY CAN LEAD TO CONDENSATION AND PREMATURE FAILURE OF THE SENSOR. TO PREVENT THESE CONDITIONS, SEAL THE CONDUIT LEADING TO THE JUNCTION BOX AND SEAL THE HOLE IN THE DRYWALL BY USING AN ADHESIVE BACKED, FOAM INSULATED PAD. MOUNT IN A LOCATION THAT WILL NOT BE AFFECTED BY DIFFUSER AND HEAT EQUIPMENT.

NOTE: INSTALL FLEXIBLE CONDUIT FOR ALL CABLE OR WIRE BROUGHT TO END DEVICE FROM JUNCTION BOX. FLEXIBLE CONDUIT SHOULD NOT EXCEED 18 INCHES.

TEMPERATURE IMMERSION SENSOR AND THERMOWELL

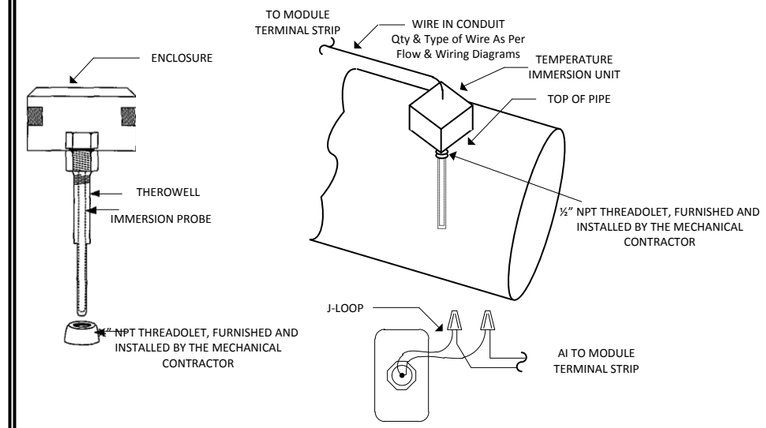

MOUNTING INSTRUCTIONS – IMMERSION UNIT

1. THE THERMOWELL THREADS INTO A 1/2" FNPT THREADOLET FURNISHED AND INSTALLED BY THE MECHANICAL CONTRACTOR.
2. THE IMMERSION UNIT THREADS INTO A 1/2" FNPT THERMOWELL, NO EXTERNAL HARDWARE IS NEEDED. THERMALLY CONDUCTIVE GREASE MUST BE APPLIED TO THE PROBE PRIOR TO INSERTION TO OPTIMIZE HEAT TRANSFER.
NOTE: THE THERMOWELLS ARE DESIGNED TO CONNECT THE 1-1/8" HEX NUT TO THE IMMERSION FITTING ON THE UNIT, DO NOT OVERTIGHTEN OR DAMAGE TO THE FITTING MAY OCCUR.
3. TERMINATE THE UNIT.
4. INCORPORATE A "J-LOOP" INTO THE TERMINATION. A "J-LOOP" IS FORMED BY POINTING THE WIRE NUTS OF A TERMINATION UP CREATING A "J" IN THE CABLE IN ORDER TO REDUCE THE LIKELYHOOD OF CONDENSATION COLLECTING IN THE WIRE NUT.

NOTE: INSTALL FLEXIBLE CONDUIT FOR ALL CABLE OR WIRE BROUGHT TO END DEVICE FROM JUNCTION BOX. FLEXIBLE CONDUIT SHOULD NOT EXCEED 18 INCHES.

CURRENT SWITCH SINGLE PHASE MOTOR

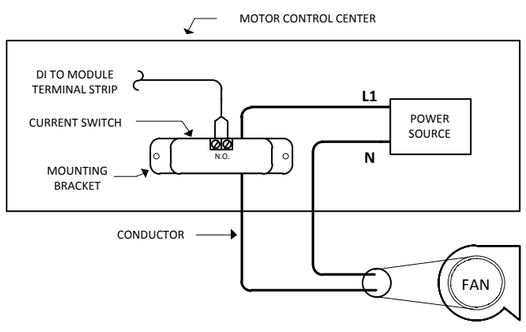

MOUNTING INSTRUCTIONS

1. **ENSURE POWER CONDUCTOR TO BE MONITORED IS DISCONNECTED AND LOCKED OUT FROM THE POWER SOURCE.**

2. INSTALL THE ADJUSTABLE MOUNTING BRACKET TO THE BACK OF THE MOTOR CONTROL CENTER/STARTER. THE SENSOR MAY BE LOCATED AT ANY POINT ON THE CONDUCTOR BETWEEN THE MOTOR AND THE MOTOR STARTER.

3. ALIGN TO PERMIT THE CONDUCTOR TO FIT THROUGH THE HOLE. SLIDE THE CONDUCTOR THROUGH THE CENTER HOLE IN THE SENSOR AND CONNECT THE CONDUCTOR TO THE LUGS ON THE MOTOR STARTER.

NOTE: LOW AMPERAGE (<1.5A) AND HIGH AMPERAGE (>200A) APPLICATIONS MAY REQUIRE SPECIAL INSTALLATION:

A. LOW AMPERAGE - TO PROVIDE ADEQUATE CURRENT, WRAP CONDUCTOR THROUGH THE CENTER HOLE AND AROUND THE SENSOR BODY TO PRODUCE MULTIPLE TURNS AND INCREASE CURRENT FLOW. EACH PASS THROUGH THE TRANSMITTER INCREASES THE AMPERAGE BY THE ORIGINAL VALUE.

B. HIGH AMPERAGE - CURRENT FLOWS IN EXCESS OF 200A REQUIRE THE USE OF AN APPROPRIATELY SIZED EXTERNAL CURRENT TRANSFORMER (CT). INSTALL THE EXTERNAL CT ON THE CONDUCTOR AND RUN THE CT SECONDARY WIRE THROUGH CURRENT SENSOR.

CAUTION: CT's CAN CONTAIN HAZARDOUS VOLTAGES. INSTALL CT's IN ACCORDANCE TO MANUFACTURERS' SPECIFICATIONS AND INSTRUCTIONS.

4. WIRE AS SHOWN ABOVE.

NOTE:
INSTALL FLEXIBLE CONDUIT FOR ALL CABLE OR WIRE BROUGHT TO END DEVICE FROM JUNCTION BOX. FLEXIBLE CONDUIT SHOULD NOT EXCEED 18 INCHES.

CURRENT SWITCH THREE PHASE MOTOR

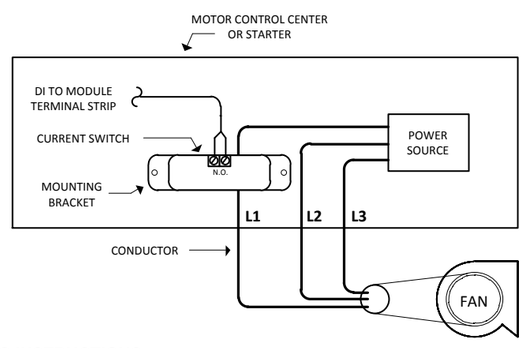

MOUNTING INSTRUCTIONS

1. **ENSURE POWER CONDUCTOR TO BE MONITORED IS DISCONNECTED AND LOCKED OUT FROM THE POWER SOURCE.**

2. INSTALL THE ADJUSTABLE MOUNTING BRACKET TO THE BACK OF THE MOTOR CONTROL CENTER/STARTER. THE SENSOR MAY BE LOCATED AT ANY POINT ON THE CONDUCTOR BETWEEN THE MOTOR AND THE MOTOR STARTER.

3. ALIGN TO PERMIT THE CONDUCTOR TO FIT THROUGH THE HOLE. SLIDE THE CONDUCTOR THROUGH THE CENTER HOLE IN THE SENSOR AND CONNECT THE CONDUCTOR TO THE LUGS ON THE MOTOR STARTER.

NOTE: LOW AMPERAGE (<1.5A) AND HIGH AMPERAGE (>200A) APPLICATIONS MAY REQUIRE SPECIAL INSTALLATION:

A. LOW AMPERAGE - TO PROVIDE ADEQUATE CURRENT, WRAP CONDUCTOR THROUGH THE CENTER HOLE AND AROUND THE SENSOR BODY TO PRODUCE MULTIPLE TURNS AND INCREASE CURRENT FLOW. EACH PASS THROUGH THE TRANSMITTER INCREASES THE AMPERAGE BY THE ORIGINAL VALUE.

B. HIGH AMPERAGE - CURRENT FLOWS IN EXCESS OF 200A REQUIRE THE USE OF AN APPROPRIATELY SIZED EXTERNAL CURRENT TRANSFORMER (CT). INSTALL THE EXTERNAL CT ON THE CONDUCTOR AND RUN THE CT SECONDARY WIRE THROUGH CURRENT SENSOR.

CAUTION: CT's CAN CONTAIN HAZARDOUS VOLTAGES. INSTALL CT's IN ACCORDANCE TO MANUFACTURERS' SPECIFICATIONS AND INSTRUCTIONS.

4. WIRE AS SHOWN ABOVE.

NOTE:
INSTALL FLEXIBLE CONDUIT FOR ALL CABLE OR WIRE BROUGHT TO END DEVICE FROM JUNCTION BOX. FLEXIBLE CONDUIT SHOULD NOT EXCEED 18 INCHES.

4 – Commissioning Reports

SUNBELT CONTROLS

Point List

Location: **Los Medanos College (Pittsburgh Campus) / Science Building**
Filters: **Physical points**

Location	Control Program	Name	Value	Type	Offset / Polarity	Exp:Num	I/O Type	Checked Out	Checkout Notes
/Los Medanos College (Pittsburgh Campus)/Science Building/Roof									
	AH-2 (EF-4)								
		BldgStatic	0.0519 in H2O	BAI	0	0:11	0-20 mA	(Sunbelt) Peter Donovan 12/19/2022 10:52:34 AM	
		CHW DP	4.81 psi	BAI	2.2	0:15	0-20 mA	(Sunbelt) Peter Donovan 1/7/2023 9:06:00 AM	1 pump @62Hz, 3 valves 100%, DP 12.33psi
		MA Temp	63.33 °F	BAI	0	0:5	Thermistor	(Sunbelt) Peter Donovan 12/16/2022 10:16:44 AM	
		OA Airflow	21218.67 cfm	BAI	0	0:9	0-20 mA	(Sunbelt) Peter Donovan 2/13/2023 10:02:59 AM	
		OA Temp	70.85 °F	BAI	0	0:8	0-20 mA	(Sunbelt) Peter Donovan 2/13/2023 10:02:59 AM	
		RA Temp	68.57 °F	BAI	0	0:7	Thermistor	(Sunbelt) Peter Donovan 12/19/2022 11:24:35 AM	
		RF DuctStatic	0.11 in H2O	BAI	0.022	0:12	0-20 mA	(Sunbelt) Peter Donovan 12/19/2022 10:52:34 AM	
		RF Speed Feedback	7.9 Hz	BAI	0.3	0:2	0-20 mA	(Sunbelt) Peter Donovan 12/19/2022 10:27:20 AM	
		SA DuctStatic	0.85 in H2O	BAI	0	0:10	0-20 mA	(Sunbelt) Peter Donovan 12/19/2022 10:52:34 AM	
		SA Temp	49.68 °F	BAI	0	0:6	Thermistor	(Sunbelt) Peter Donovan 12/19/2022 11:10:41 AM	
		SF Speed Feedback	30.0 Hz	BAI	-0.8	0:1	0-20 mA	(Sunbelt) Peter Donovan 12/19/2022 10:27:17 AM	
		RF VFD Flt	Normal	BBI	normal	0:4	Dry Contact	(Sunbelt) Peter Donovan 12/19/2022 10:49:55 AM	
		SF VFD Flt	Normal	BBI	normal	0:3	Dry Contact	(Sunbelt) Peter Donovan 12/19/2022 10:49:55 AM	
		Chilled Water Valve	33.5 %	BAO	0	0:6	Electrical 0-10 Volt	(Sunbelt) Mike Clark 12/16/2022 8:55:12 AM	
		EA Damper	0.0 %	BAO	0	0:9	Electrical 0-10 Volt	(Sunbelt) Peter Donovan 12/16/2022 10:37:32 AM	
		Hot Water Valve	0.0 %	BAO	0	0:5	Electrical 0-10 Volt	(Sunbelt) Peter Donovan 12/16/2022 10:14:53 AM	
		OA Damper	100.0 %	BAO	0	0:7	Electrical 0-10 Volt	(Sunbelt) Peter Donovan 12/16/2022 10:37:32 AM	
		RA Damper	0.0 %	BAO	0	0:8	Electrical 0-10 Volt	(Sunbelt) Peter Donovan 12/16/2022 10:37:32 AM	
		RF VFD Speed	13.3 %	BAO	0	0:4	Electrical 0-10 Volt	(Sunbelt) Peter Donovan 12/16/2022 10:41:56 AM	
		SF VFD Speed	50.6 %	BAO	0	0:3	Electrical 0-10 Volt	(Sunbelt) Peter Donovan 12/19/2022 11:24:30 AM	

Location	Control Program	Name	Value	Type	Offset / Polarity	Exp:Num	I/O Type	Checked Out	Checkout Notes
		RF VFD S/S	Enabled	BBO	normal	0:2	Relay / Triac Output	(Sunbelt) Peter Donovan 12/19/2022 10:26:30 AM	
		SF VFD S/S	Enabled	BBO	normal	0:1	Relay / Triac Output	(Sunbelt) Peter Donovan 12/19/2022 10:26:30 AM	
	AH-3 (EF-5)								
		BldgStatic	0.05 in H2O	BAI	0	0:11	0-20 mA	(Sunbelt) Peter Donovan 12/27/2022 1:02:59 PM	
		MA Temp	63.83 °F	BAI	0	0:5	Thermistor	(Sunbelt) Peter Donovan 12/27/2022 12:33:34 PM	
		OA Airflow	7733.37 cfm	BAI	0	0:9	0-20 mA	(Sunbelt) Peter Donovan 2/13/2023 9:52:20 AM	
		OA Temp	64.47 °F	BAI	0	0:8	0-20 mA	(Sunbelt) Peter Donovan 2/13/2023 9:52:20 AM	
		RA Temp	72.83 °F	BAI	0	0:7	Thermistor	(Sunbelt) Peter Donovan 12/27/2022 12:33:34 PM	
		RF DuctStatic	0.1 in H2O	BAI	0	0:12	0-20 mA	(Sunbelt) Peter Donovan 12/27/2022 1:02:59 PM	
		RF Speed Feedback	6.5 Hz	BAI	0	0:2	0-20 mA	(Sunbelt) Peter Donovan 12/27/2022 11:41:49 AM	
		SA DuctStatic	0.51 in H2O	BAI	0	0:10	0-20 mA	(Sunbelt) Peter Donovan 12/27/2022 12:44:53 PM	
		SA Temp	49.39 °F	BAI	0	0:6	Thermistor	(Sunbelt) Peter Donovan 12/27/2022 12:34:40 PM	
		SF Speed Feedback	27.7 Hz	BAI	0	0:1	0-20 mA	(Sunbelt) Peter Donovan 12/28/2022 1:07:36 PM	
		RF VFD Flt	Normal	BBI	normal	0:4	Dry Contact	(Sunbelt) Peter Donovan 12/27/2022 1:04:23 PM	
		SF VFD Flt	Normal	BBI	normal	0:3	Dry Contact	(Sunbelt) Peter Donovan 2/13/2023 9:52:29 AM	
		Chilled Water Valve	44.9 %	BAO	0	0:6	Electrical 0-10 Volt	(Acco) Andy Bruns 1/3/2023 1:21:43 PM	
		EA Damper	0.0 %	BAO	0	0:9	Electrical 0-10 Volt	(Sunbelt) Peter Donovan 12/27/2022 11:11:25 AM	
		Hot Water Valve	0.0 %	BAO	0	0:5	Electrical 0-10 Volt	(Sunbelt) Peter Donovan 12/27/2022 1:11:04 PM	
		OA Damper	100.0 %	BAO	0	0:7	Electrical 0-10 Volt	(Sunbelt) Peter Donovan 12/27/2022 11:11:19 AM	desmin OA@40% RA@50% SF@75%
		RA Damper	0.0 %	BAO	0	0:8	Electrical 0-10 Volt	(Sunbelt) Peter Donovan 12/27/2022 11:11:19 AM	
		RF VFD Speed	10.0 %	BAO	0	0:4	Electrical 0-10 Volt	(Sunbelt) Peter Donovan 12/27/2022 11:41:49 AM	
		SF VFD Speed	47.9 %	BAO	0	0:3	Electrical 0-10 Volt	(Sunbelt) Peter Donovan 12/28/2022 1:08:11 PM	
		RF VFD S/S	Enabled	BBO	normal	0:2	Relay / Triac Output	(Sunbelt) Peter Donovan 12/27/2022 11:41:49 AM	
		SF VFD S/S	Enabled	BBO	normal	0:1	Relay / Triac Output	(Sunbelt) Peter Donovan 12/28/2022 1:08:11 PM	
	EF-4								
		EF Status	On	BBI	normal	0:12	Dry Contact	(Sunbelt) Peter Donovan 1/4/2023 11:24:10 AM	
		EF S/S	Enabled	BBO	normal	0:10	Relay / Triac Output	(Sunbelt) Peter Donovan 1/4/2023 11:24:10 AM	
	EF-8								
		EF Status	On	BBI	normal	0:14	Dry Contact	(Sunbelt) Peter Donovan 12/21/2022 11:39:21 AM	

Location	Control Program	Name	Value	Type	Offset / Polarity	Exp:Num	I/O Type	Checked Out	Checkout Notes
		EF S/S	Enabled	BBO	normal	0:12	Relay / Triac Output	(Sunbelt) Peter Donovan 12/21/2022 11:39:21 AM	
	Lab Exhaust System								
		EA Duct Static Pressure	-0.9 in H2O	BAI	0	0:11	0-20 mA	(Sunbelt) Peter Donovan 1/10/2023 5:03:59 PM	
		EF-1 Speed Feedback	34.2 Hz	BAI	0	0:1	0-20 mA	(Sunbelt) Peter Donovan 12/21/2022 8:47:08 AM	
		EF-2 Speed Feedback	35.0 Hz	BAI	0	0:2	0-20 mA	(Sunbelt) Peter Donovan 12/21/2022 8:47:08 AM	
		EF-3 Amps	-0.0 A	BAI	0	0:3	0-20 mA	(Sunbelt) Peter Donovan 12/21/2022 12:54:16 PM	
		EF-1 IsoDmprOp	Open	BBI	normal	0:6	Dry Contact	(Sunbelt) Peter Donovan 12/20/2022 12:58:41 PM	
		EF-1 VFD Flt	Normal	BBI	normal	0:4	Dry Contact	(Sunbelt) Peter Donovan 12/21/2022 10:49:38 AM	
		EF-2 IsoDmprOp	Open	BBI	normal	0:7	Dry Contact	(Sunbelt) Peter Donovan 12/20/2022 12:58:41 PM	
		EF-2 VFD Flt	Normal	BBI	normal	0:5	Dry Contact	(Sunbelt) Peter Donovan 12/21/2022 10:49:38 AM	
		EF-3 IsoDmprOp	Closed	BBI	normal	0:8	Dry Contact	(Sunbelt) Peter Donovan 12/20/2022 12:58:41 PM	
		BypDmprPos	0.0 %	BAO	0	0:9	Electrical 0-10 Volt	(Sunbelt) Peter Donovan 12/21/2022 12:54:06 PM	
		EF-1 VFD Spd	56.8 %	BAO	0	0:4	Electrical 0-10 Volt	(Sunbelt) Peter Donovan 12/21/2022 12:54:06 PM	
		EF-2 VFD Spd	56.8 %	BAO	0	0:5	Electrical 0-10 Volt	(Sunbelt) Peter Donovan 12/21/2022 12:54:06 PM	
		EF-1 IsoDmpr	Open	BBO	normal	0:6	Relay / Triac Output	(Sunbelt) Peter Donovan 12/20/2022 12:57:50 PM	
		EF-1 VFD S/S	Enabled	BBO	normal	0:1	Relay / Triac Output	(Sunbelt) Peter Donovan 12/21/2022 10:41:24 AM	
		EF-2 IsoDmpr	Open	BBO	normal	0:7	Relay / Triac Output	(Sunbelt) Peter Donovan 12/20/2022 12:57:50 PM	
		EF-2 VFD S/S	Enabled	BBO	normal	0:2	Relay / Triac Output	(Sunbelt) Peter Donovan 12/21/2022 10:41:24 AM	
		EF-3 IsoDmpr	Closed	BBO	normal	0:8	Relay / Triac Output	(Sunbelt) Peter Donovan 12/20/2022 12:57:50 PM	
		EF-3 VFD S/S	Disabled	BBO	normal	0:3	Relay / Triac Output	(Sunbelt) Peter Donovan 12/20/2022 1:28:06 PM	
/Los Medanos College (Pittsburgh Campus)/Science Building/Lower Roof									
	AC-1								
		BldgStatic	0.0607 in H2O	BAI	0	0:11	0-20 mA	(Sunbelt) Peter Donovan 12/15/2022 2:11:08 PM	
		MA Temp	61.06 °F	BAI	0	0:5	Thermistor	(Sunbelt) Peter Donovan 12/15/2022 7:39:29 AM	
		OA Airflow	327.72 cfm	BAI	4.5	0:9	0-20 mA	(Sunbelt) Peter Donovan 4/11/2023 12:54:23 PM	
		OA Temp	57.53 °F	BAI	0	0:8	0-20 mA	(Sunbelt) Peter Donovan 3/31/2023 10:43:27 AM	
		RA Temp	62.41 °F	BAI	0	0:7	Thermistor	(Sunbelt) Peter Donovan 12/15/2022 7:24:29 AM	

Location	Control Program	Name	Value	Type	Offset / Polarity	Exp:Num	I/O Type	Checked Out	Checkout Notes
		RF Speed Feedback	6.7 Hz	BAI	0	0:2	0-20 mA	(Sunbelt) Peter Donovan 1/3/2023 9:36:42 AM	
		SA DuctStatic	0.064 in H2O	BAI	0	0:10	0-20 mA	(Sunbelt) Peter Donovan 12/15/2022 2:11:08 PM	
		SA Temp	68.16 °F	BAI	0	0:6	Thermistor	(Sunbelt) Peter Donovan 12/15/2022 7:29:29 AM	
		SF Speed Feedback	33.5 Hz	BAI	0	0:1	0-20 mA	(Sunbelt) Peter Donovan 12/15/2022 8:14:15 AM	
		Zone CO2	411.0 ppm	ASVI				(Sunbelt) Peter Donovan 12/15/2022 2:10:58 PM	
		Zone Temp	71.2 °F	ASVI				(Sunbelt) Peter Donovan 12/15/2022 2:10:58 PM	
		RF VFD Flt	Normal	BBI	normal	0:4	Dry Contact	(Sunbelt) Peter Donovan 1/3/2023 8:42:04 AM	
		SF VFD Flt	Normal	BBI	normal	0:3	Dry Contact	(Sunbelt) Peter Donovan 12/15/2022 2:10:43 PM	
		EA Damper	0.0 %	BAO	0	0:10	Electrical 0-10 Volt	(Sunbelt) Peter Donovan 12/15/2022 7:40:11 AM	
		Hot Water Valve	80.7 %	BAO	0	0:5	Electrical 0-10 Volt	(Sunbelt) Peter Donovan 12/15/2022 1:24:42 PM	
		OA Damper	7.8 %	BAO	0	0:8	Electrical 0-10 Volt	(Sunbelt) Peter Donovan 12/15/2022 7:18:47 AM	
		RA Damper	0.0 %	BAO	0	0:9	Electrical 0-10 Volt	(Sunbelt) Peter Donovan 12/15/2022 7:40:00 AM	
		RF VFD Speed	10.0 %	BAO	0	0:4	Electrical 0-10 Volt	(Sunbelt) Peter Donovan 1/3/2023 9:36:42 AM	
		SF VFD Speed	57.0 %	BAO	0	0:3	Electrical 0-10 Volt	(Sunbelt) Peter Donovan 12/15/2022 8:16:41 AM	
		ClgStg-1	Disabled	BBO	normal	0:6	Relay / Triac Output	(Sunbelt) Peter Donovan 12/15/2022 2:09:01 PM	
		ClgStg-2	Disabled	BBO	normal	0:7	Relay / Triac Output	(Sunbelt) Peter Donovan 12/15/2022 2:10:11 PM	
		RF VFD S/S	Enabled	BBO	normal	0:2	Relay / Triac Output	(Sunbelt) Peter Donovan 12/15/2022 7:40:22 AM	
		SF VFD S/S	Enabled	BBO	normal	0:1	Relay / Triac Output	(Sunbelt) Peter Donovan 12/14/2022 2:15:02 PM	
/Los Medanos College (Pittsburgh Campus)/Science Building/Second Floor/Lab 242									
	Lab 242 Manager								
		Zone Temp	68.5 °F	ASVI				(Sunbelt) Peter Donovan 12/28/2022 2:24:40 PM	
		CommonHoodAlarm	Normal	BBI	normal	0:2	Dry Contact	(Sunbelt) Peter Donovan 1/6/2023 10:12:29 AM	
		ZoneOcc	Off	BBI	normal	0:1	Dry Contact	(Acco) Andy Bruns 12/29/2022 10:32:01 AM	
	SUP 2.27								
		SA Airflow	1525.4 cfm	BAI	0	0:3	0-20 mA	(Sunbelt) Peter Donovan 1/3/2023 11:55:18 AM	
		SA DmprPosFdbk	35.6 %	BAI	0	0:4	0-20 mA	(Sunbelt) Jacob Davis 12/28/2022 10:19:17 AM	
		SA Temp	59.9 °F	BAI	0	0:5	Thermistor	(Sunbelt) Peter Donovan 12/1/2022 3:27:12 AM	
		HW VlvPos	0.0 %	BAO	0	0:2	Electrical 0-10 Volt	(Acco) Andy Bruns 1/5/2023 7:48:06 AM	
		SA AirflowStpt	1493.3 cfm	BAO	0	0:1	Electrical 0-10 Volt	(Sunbelt) Jacob Davis 12/28/2022 10:19:17 AM	
	GEX 2.27								
		EA Airflow	85.8 cfm	BAI	0	0:6	0-20 mA	(Sunbelt) Peter Donovan 1/3/2023 11:50:22 AM	
		EA DmprPosFdbk	25.7 %	BAI	0	0:7	0-20 mA	(Acco) Andy Bruns 12/28/2022 10:19:26 AM	
		EA AirflowStpt	112.1 cfm	BAO	0	0:3	Electrical 0-10 Volt	(Acco) Andy Bruns 12/28/2022 10:19:33 AM	
	HEX 2.27A								
		HoodAirflow	303.8 cfm	BAI	0	0:8	0-20 mA	(Sunbelt) Peter Donovan 1/4/2023 1:47:37 PM	
		HoodDmprPosFdbk	40.3 %	BAI	0	0:9	0-20 mA	(Acco) Andy Bruns 12/28/2022 10:19:44 AM	
	HEX 2.27B								
		HoodAirflow	294.2 cfm	BAI	0	0:11	0-20 mA	(Sunbelt) Peter Donovan 1/10/2023 5:21:09 PM	
		HoodDmprPosFdbk	32.9 %	BAI	0	0:12	0-20 mA	(Acco) Andy Bruns 12/28/2022 10:19:54 AM	
	HEX 2.27C								
		HoodAirflow	376.0 cfm	BAI	0	0:14	0-20 mA	(Sunbelt) Peter Donovan 1/10/2023 5:23:13 PM	
		HoodDmprPosFdbk	41.8 %	BAI	0	0:15	0-20 mA	(Acco) Andy Bruns 12/28/2022 10:20:03 AM	

Location	Control Program	Name	Value	Type	Offset / Polarity	Exp:Num	I/O Type	Checked Out	Checkout Notes
	HEX 2.27D								
		HoodAirflow	301.1 cfm	BAI	0	0:17	0-20 mA	(Sunbelt) Peter Donovan 1/10/2023 5:23:22 PM	
		HoodDmprPosFdbk	36.5 %	BAI	0	0:18	0-20 mA	(Acco) Andy Bruns 12/28/2022 10:20:11 AM	
	HEX 2.27E								
		HoodAirflow	288.2 cfm	BAI	0	0:20	0-20 mA	(Sunbelt) Peter Donovan 1/6/2023 9:20:09 AM	
		HoodDmprPosFdbk	39.2 %	BAI	0	0:21	0-20 mA	(Acco) Andy Bruns 12/28/2022 10:20:19 AM	
/Los Medanos College (Pittsburgh Campus)/Science Building/Second Floor/Lab 235									
	Lab 235 Manager								
		Zone Temp	67.4 °F	ASVI				(Sunbelt) Peter Donovan 1/6/2023 1:26:31 PM	
		CommonHoodAlarm	Alarm	BBI	normal	0:2	Dry Contact	(Sunbelt) Peter Donovan 1/13/2023 1:34:51 PM	
		ZoneOcc	Off	BBI	normal	0:1	Dry Contact	(Sunbelt) Peter Donovan 1/13/2023 1:34:51 PM	
	SUP 2.22A								
		SA Airflow	1231.0 cfm	BAI	0	0:3	0-20 mA	(Sunbelt) Peter Donovan 1/13/2023 1:28:37 PM	
		SA DmprPosFdbk	54.0 %	BAI	0	0:4	0-20 mA	(Sunbelt) Peter Donovan 1/13/2023 1:28:37 PM	
		SA Temp	85.0 °F	BAI	0	0:5	Thermistor	(Sunbelt) Peter Donovan 12/1/2022 3:48:07 AM	
		HW VlvPos	99.0 %	BAO	0	0:2	Electrical 0-10 Volt	(Sunbelt) Peter Donovan 1/13/2023 1:34:40 PM	
		SA AirflowStpt	1188.0 cfm	BAO	0	0:1	Electrical 0-10 Volt	(Sunbelt) Peter Donovan 1/13/2023 1:28:43 PM	
	SUP 2.22B								
		SA Airflow	1237.3 cfm	BAI	0	0:6	0-20 mA	(Sunbelt) Peter Donovan 1/13/2023 1:37:06 PM	
		SA DmprPosFdbk	54.2 %	BAI	0	0:7	0-20 mA	(Sunbelt) Peter Donovan 1/13/2023 1:37:06 PM	
		SA Temp	66.6 °F	BAI	0	0:8	Thermistor	(Sunbelt) Peter Donovan 12/1/2022 3:48:12 AM	
		HW VlvPos	98.8 %	BAO	0	0:4	Electrical 0-10 Volt	(Sunbelt) Peter Donovan 1/13/2023 1:41:31 PM	
		SA AirflowStpt	1188.0 cfm	BAO	0	0:3	Electrical 0-10 Volt	(Sunbelt) Peter Donovan 1/13/2023 1:37:06 PM	
	SUP 2.22C								
		SA Airflow	1208.4 cfm	BAI	0	0:9	0-20 mA	(Sunbelt) Peter Donovan 1/13/2023 1:50:02 PM	
		SA DmprPosFdbk	53.8 %	BAI	0	0:10	0-20 mA	(Sunbelt) Peter Donovan 1/13/2023 1:50:02 PM	
		SA Temp	96.5 °F	BAI	0	0:11	Thermistor	(Sunbelt) Peter Donovan 12/1/2022 3:48:19 AM	
		HW VlvPos	31.3 %	BAO	0	0:6	Electrical 0-10 Volt	(Sunbelt) Peter Donovan 1/13/2023 1:50:02 PM	
		SA AirflowStpt	1188.0 cfm	BAO	0	0:5	Electrical 0-10 Volt	(Sunbelt) Peter Donovan 1/13/2023 1:50:02 PM	
	SUP 2.22D								
		SA Airflow	1241.0 cfm	BAI	0	0:12	0-20 mA	(Sunbelt) Peter Donovan 1/13/2023 2:03:22 PM	
		SA DmprPosFdbk	56.6 %	BAI	0	0:13	0-20 mA	(Sunbelt) Peter Donovan 1/13/2023 2:03:22 PM	
		SA Temp	93.8 °F	BAI	0	0:14	Thermistor	(Sunbelt) Peter Donovan 12/1/2022 3:48:25 AM	
		HW VlvPos	59.7 %	BAO	0	0:8	Electrical 0-10 Volt	(Sunbelt) Peter Donovan 1/13/2023 2:03:22 PM	
		SA AirflowStpt	1188.0 cfm	BAO	0	0:7	Electrical 0-10 Volt	(Sunbelt) Peter Donovan 1/13/2023 2:03:22 PM	
	HEX 2.22A								
		HoodAirflow	302.4 cfm	BAI	0	0:15	0-20 mA	(Sunbelt) Peter Donovan 1/12/2023 9:15:50 AM	
		HoodDmprPosFdbk	38.7 %	BAI	0	0:16	0-20 mA	(Sunbelt) Peter Donovan 1/12/2023 9:15:50 AM	
	HEX 2.22B								
		HoodAirflow	446.9 cfm	BAI	0	0:18	0-20 mA	(Sunbelt) Peter Donovan 7/17/2023 11:03:06 AM	
		HoodDmprPosFdbk	45.8 %	BAI	0	0:19	0-20 mA	(Sunbelt) Peter Donovan 7/17/2023 11:03:06 AM	
	HEX 2.22C								

Location	Control Program	Name	Value	Type	Offset / Polarity	Exp:Num	I/O Type	Checked Out	Checkout Notes
		HoodAirflow	504.7 cfm	BAI	0	0:21	0-20 mA	(Sunbelt) Peter Donovan 1/12/2023 9:38:41 AM	
		HoodDmprPosFdbk	49.2 %	BAI	0	0:22	0-20 mA	(Sunbelt) Peter Donovan 1/12/2023 9:38:41 AM	
	HEX 2.22D								
		HoodAirflow	296.1 cfm	BAI	0	0:24	0-20 mA	(Sunbelt) Peter Donovan 1/12/2023 9:42:38 AM	
		HoodDmprPosFdbk	37.6 %	BAI	0	0:25	0-20 mA	(Sunbelt) Peter Donovan 1/12/2023 9:42:38 AM	
	HEX 2.22E								
		HoodAirflow	302.3 cfm	BAI	0	1:1	0-20 mA	(Sunbelt) Peter Donovan 1/12/2023 9:42:31 AM	
		HoodDmprPosFdbk	40.3 %	BAI	0	1:2	0-20 mA	(Sunbelt) Peter Donovan 1/12/2023 9:42:31 AM	
	HEX 2.22F								
		HoodAirflow	296.8 cfm	BAI	0	1:4	0-20 mA	(Sunbelt) Peter Donovan 1/12/2023 9:43:34 AM	
		HoodDmprPosFdbk	41.2 %	BAI	0	1:5	0-20 mA	(Sunbelt) Peter Donovan 1/12/2023 9:43:34 AM	
	HEX 2.22G								
		HoodAirflow	801.1 cfm	BAI	0	1:7	0-20 mA	(Sunbelt) Peter Donovan 1/12/2023 9:44:49 AM	
		HoodDmprPosFdbk	70.1 %	BAI	0	1:8	0-20 mA	(Sunbelt) Peter Donovan 1/12/2023 9:44:49 AM	
	HEX 2.22H								
		HoodAirflow	497.8 cfm	BAI	0	1:10	0-20 mA	(Sunbelt) Peter Donovan 1/12/2023 9:46:49 AM	
		HoodDmprPosFdbk	53.5 %	BAI	0	1:11	0-20 mA	(Sunbelt) Peter Donovan 1/12/2023 9:46:49 AM	
	HEX 2.22J								
		HoodAirflow	322.7 cfm	BAI	0	2:1	0-20 mA	(Sunbelt) Peter Donovan 1/12/2023 9:49:55 AM	
		HoodDmprPosFdbk	36.6 %	BAI	0	2:2	0-20 mA	(Sunbelt) Peter Donovan 1/12/2023 9:49:55 AM	
	HEX 2.22K								
		HoodAirflow	406.5 cfm	BAI	0	2:4	0-20 mA	(Sunbelt) Peter Donovan 1/12/2023 9:53:31 AM	
		HoodDmprPosFdbk	48.1 %	BAI	0	2:5	0-20 mA	(Sunbelt) Peter Donovan 1/12/2023 9:53:31 AM	
	HEX 2.22L								
		HoodAirflow	299.6 cfm	BAI	0	2:7	0-20 mA	(Sunbelt) Peter Donovan 1/12/2023 10:10:53 AM	
		HoodDmprPosFdbk	52.9 %	BAI	0	2:8	0-20 mA	(Sunbelt) Peter Donovan 1/12/2023 10:10:53 AM	
	HEX 2.22M								
		HoodAirflow	301.3 cfm	BAI	0	2:10	0-20 mA	(Sunbelt) Peter Donovan 1/12/2023 10:12:32 AM	
		HoodDmprPosFdbk	41.3 %	BAI	0	2:11	0-20 mA	(Sunbelt) Peter Donovan 1/12/2023 10:12:32 AM	
	HEX 2.22N								
		HoodAirflow	295.7 cfm	BAI	0	3:1	0-20 mA	(Sunbelt) Peter Donovan 1/12/2023 10:13:59 AM	
		HoodDmprPosFdbk	35.5 %	BAI	0	3:2	0-20 mA	(Sunbelt) Peter Donovan 1/12/2023 10:13:59 AM	
	HEX 2.22P								
		HoodAirflow	298.8 cfm	BAI	0	3:4	0-20 mA	(Sunbelt) Peter Donovan 1/12/2023 10:15:21 AM	
		HoodDmprPosFdbk	37.5 %	BAI	0	3:5	0-20 mA	(Sunbelt) Peter Donovan 1/12/2023 10:15:21 AM	
	HEX 2.22Q								
		HoodAirflow	300.7 cfm	BAI	0	3:7	0-20 mA	(Sunbelt) Peter Donovan 1/12/2023 10:20:33 AM	
		HoodDmprPosFdbk	40.2 %	BAI	0	3:8	0-20 mA	(Sunbelt) Peter Donovan 1/12/2023 10:20:33 AM	
	HEX 2.22R								
		HoodAirflow	201.2 cfm	BAI	0	3:10	0-20 mA	(Sunbelt) Peter Donovan 1/12/2023 10:22:04 AM	
		HoodDmprPosFdbk	49.6 %	BAI	0	3:11	0-20 mA	(Sunbelt) Peter Donovan 1/12/2023 10:22:04 AM	
	HEX 2.22T								

Location	Control Program	Name	Value	Type	Offset / Polarity	Exp:Num	I/O Type	Checked Out	Checkout Notes
		HoodAirflow	198.6 cfm	BAI	0	4:1	0-20 mA	(Sunbelt) Peter Donovan 1/12/2023 9:54:52 AM	
		HoodDmprPosFdbk	45.5 %	BAI	0	4:2	0-20 mA	(Sunbelt) Peter Donovan 1/12/2023 9:54:52 AM	
/Los Medanos College (Pittsburgh Campus)/Science Building/Second Floor/Lab 237									
	Lab 237 Manager								
		Zone Temp	71.5 °F	ASVI				(Sunbelt) Peter Donovan 2/17/2023 10:21:45 AM	
		CommonHoodAlarm	Normal	BBI	normal	0:2	Dry Contact	(Sunbelt) Peter Donovan 2/17/2023 10:21:45 AM	
		ZoneOcc	On	BBI	normal	0:1	Dry Contact	(Sunbelt) Peter Donovan 2/17/2023 10:21:45 AM	
	SUP 2.21								
		SA Airflow	964.9 cfm	BAI	0	0:3	0-20 mA	(Sunbelt) Peter Donovan 12/13/2022 9:45:31 AM	
		SA DmprPosFdbk	48.4 %	BAI	0	0:4	0-20 mA	(Sunbelt) Peter Donovan 12/13/2022 9:45:31 AM	
		SA Temp	56.8 °F	BAI	0	0:5	Thermistor	(Sunbelt) Peter Donovan 12/1/2022 1:25:08 AM	
		HW VlvPos	0.0 %	BAO	0	0:2	Electrical 0-10 Volt	(Sunbelt) Peter Donovan 12/4/2022 2:33:37 PM	
		SA AirflowStpt	950.0 cfm	BAO	0	0:1	Electrical 0-10 Volt	(Sunbelt) Peter Donovan 12/13/2022 9:45:31 AM	
	GEX 2.21								
		EA Airflow	537.2 cfm	BAI	0	0:6	0-10 Volt	(Sunbelt) Peter Donovan 12/12/2022 7:49:05 AM	
		EA DmprPosFdbk	51.6 %	BAI	0	0:7	0-10 Volt	(Sunbelt) Peter Donovan 12/12/2022 7:49:05 AM	
		EA AirflowStpt	506.6 cfm	BAO	0	0:3	Electrical 0-10 Volt	(Sunbelt) Peter Donovan 12/12/2022 7:49:05 AM	
	HEX 2.21A								
		HoodAirflow	297.2 cfm	BAI	0	0:11	0-20 mA	(Sunbelt) Peter Donovan 12/12/2022 7:48:35 AM	
		HoodDmprPosFdbk	37.8 %	BAI	0	0:12	0-20 mA	(Sunbelt) Peter Donovan 12/12/2022 7:48:35 AM	
	HEX 2.21B								
		HoodAirflow	311.1 cfm	BAI	0	0:8	0-20 mA	(Sunbelt) Jacob Davis 12/28/2022 9:24:42 AM	
		HoodDmprPosFdbk	48.0 %	BAI	0	0:9	0-20 mA	(Sunbelt) Jacob Davis 12/28/2022 9:24:45 AM	
/Los Medanos College (Pittsburgh Campus)/Science Building/Second Floor									
	VAV 2.17 (Rm 241)								
		Flow Control		BAF					
		Flow Control / Flow Input	77.0 cfm	BAI	0	0:1	Flow Input	(Sunbelt) Peter Donovan 11/11/2022 2:54:07 AM	
		DA Temp	61.83 °F	BAI	0	0:1	Thermistor	(Sunbelt) Peter Donovan 11/11/2022 1:59:49 AM	
		Zone Temp	71.9 °F	ASVI				(Sunbelt) Peter Donovan 11/11/2022 1:59:49 AM	
		HW Valve	0.0 %	BAO	0	0:1	Electrical 0-10 Volt	(Sunbelt) Kevin Dale 1/17/2023 12:47:00 PM	
	VAV 2.18 (Rm 244, 234)								
		Flow Control		BAF					
		Flow Control / Flow Input	93.0 cfm	BAI	0	0:1	Flow Input	(Sunbelt) Peter Donovan 11/10/2022 6:25:38 AM	
		DA Temp	61.93 °F	BAI	0	0:1	Thermistor	(Sunbelt) Peter Donovan 11/10/2022 6:19:02 AM	
		Zone Temp	71.5 °F	ASVI				(Sunbelt) Peter Donovan 11/10/2022 6:25:38 AM	
		HW Valve	0.0 %	BAO	0	0:1	Electrical 0-10 Volt	(Sunbelt) Kevin Dale 1/17/2023 7:09:43 AM	
	VAV 2.19 (Rm 227)								
		Flow Control		BAF					
		Flow Control / Flow Input	759.0 cfm	BAI	0	0:1	Flow Input	(Sunbelt) Peter Donovan 11/11/2022 2:32:44 AM	
		DA Temp	56.68 °F	BAI	0	0:1	Thermistor	(Sunbelt) Peter Donovan 11/11/2022 1:59:41 AM	
		Zone Temp	72.7 °F	ASVI				(Sunbelt) Peter Donovan 11/11/2022 1:59:41 AM	
		HW Valve	0.0 %	BAO	0	0:1	Electrical 0-10 Volt	(Sunbelt) Kevin Dale 1/17/2023 7:38:57 AM	

Location	Control Program	Name	Value	Type	Offset / Polarity	Exp:Num	I/O Type	Checked Out	Checkout Notes
	VAV 2.20 (Rm 237)								
		Flow Control		BAF					
		Flow Control / Flow Input	17.0 cfm	BAI	0	0:1	Flow Input	(Sunbelt) Mike Clark 11/11/2022 3:41:56 AM	
		DA Temp	70.14 °F	BAI	0	0:1	Thermistor	(Sunbelt) Peter Donovan 11/11/2022 2:00:01 AM	
		Zone Temp	70.2 °F	ASVI				(Sunbelt) Peter Donovan 11/11/2022 2:00:01 AM	
		HW Valve	0.0 %	BAO	0	0:1	Electrical 0-10 Volt	(Sunbelt) Kevin Dale 1/17/2023 12:28:52 PM	
	VAV 2.23 (Rm 232, 233)								
		Flow Control		BAF					
		Flow Control / Flow Input	80.0 cfm	BAI	0	0:1	Flow Input	(Sunbelt) Mike Clark 11/11/2022 4:00:05 AM	
		DA Temp	58.76 °F	BAI	0	0:1	Thermistor	(Sunbelt) Mike Clark 11/11/2022 3:46:50 AM	
		Zone Temp	71.7 °F	ASVI				(Sunbelt) Mike Clark 11/11/2022 3:46:50 AM	
		HW Valve	0.0 %	BAO	0	0:1	Electrical 0-10 Volt	(Sunbelt) Kevin Dale 1/17/2023 7:30:30 AM	
	VAV 2.24 CO2 (Rm 231)								
		Flow Control		BAF					
		Flow Control / Flow Input	171.0 cfm	BAI	0	0:1	Flow Input	(Sunbelt) Mike Clark 11/11/2022 4:17:47 AM	
		DA Temp	60.49 °F	BAI	0	0:1	Thermistor	(Sunbelt) Mike Clark 11/11/2022 4:17:47 AM	
		Zone CO2	428.0 ppm	ASVI				(Sunbelt) Peter Donovan 2/13/2023 6:50:36 AM	
		Zone Temp	71.7 °F	ASVI				(Sunbelt) Mike Clark 11/11/2022 4:17:47 AM	
		HW Valve	0.0 %	BAO	0	0:1	Electrical 0-10 Volt	(Sunbelt) Kevin Dale 1/17/2023 7:51:47 AM	
	VAV 2.25 CO2 (Rm 230)								
		Flow Control		BAF					
		Flow Control / Flow Input	516.0 cfm	BAI	0	0:1	Flow Input	(Sunbelt) Mike Clark 11/11/2022 4:49:41 AM	
		DA Temp	59.62 °F	BAI	0	0:1	Thermistor	(Sunbelt) Peter Donovan 11/11/2022 4:31:03 AM	
		Zone CO2	383.0 ppm	ASVI				(Sunbelt) Peter Donovan 1/6/2023 3:14:54 PM	
		Zone Temp	69.7 °F	ASVI				(Sunbelt) Peter Donovan 11/11/2022 4:31:03 AM	
		HW Valve	0.0 %	BAO	0	0:1	Electrical 0-10 Volt	(Sunbelt) Kevin Dale 1/17/2023 1:00:08 PM	
	VAV 2.26 CO2 (Rm 229, 228)								
		Flow Control		BAF					
		Flow Control / Flow Input	968.0 cfm	BAI	0	0:1	Flow Input	(Sunbelt) Mike Clark 11/11/2022 4:59:12 AM	
		DA Temp	57.11 °F	BAI	0	0:1	Thermistor	(Sunbelt) Peter Donovan 11/11/2022 4:31:19 AM	
		Zone CO2	420.0 ppm	ASVI				(Sunbelt) Peter Donovan 1/6/2023 3:29:17 PM	
		Zone Temp	70.7 °F	ASVI				(Sunbelt) Peter Donovan 11/11/2022 4:31:19 AM	
		HW Valve	0.0 %	BAO	0	0:1	Electrical 0-10 Volt	(Sunbelt) Kevin Dale 1/17/2023 9:12:12 AM	
	VAV 2.28 (Rm 243)								
		Flow Control		BAF					
		Flow Control / Flow Input	19.0 cfm	BAI	0	0:1	Flow Input	(Sunbelt) Peter Donovan 11/10/2022 6:13:53 AM	
		DA Temp	64.7 °F	BAI	0	0:1	Thermistor	(Sunbelt) Peter Donovan 11/10/2022 6:09:23 AM	
		Zone Temp	69.2 °F	ASVI				(Sunbelt) Peter Donovan 11/10/2022 6:09:23 AM	
		HW Valve	0.0 %	BAO	0	0:1	Electrical 0-10 Volt	(Sunbelt) Kevin Dale 1/17/2023 11:51:56 AM	
	VAV 2.29 (Rm 245)								
		Flow Control		BAF					
		Flow Control / Flow Input	258.0 cfm	BAI	0	0:1	Flow Input	(Sunbelt) Peter Donovan 11/10/2022 5:49:53 AM	

Location	Control Program	Name	Value	Type	Offset / Polarity	Exp:Num	I/O Type	Checked Out	Checkout Notes
		DA Temp	56.99 °F	BAI	0	0:1	Thermistor	(Sunbelt) Peter Donovan 11/10/2022 5:47:16 AM	
		Zone Temp	70.2 °F	ASVI				(Sunbelt) Peter Donovan 11/10/2022 5:47:16 AM	
		HW Valve	0.0 %	BAO	0	0:1	Electrical 0-10 Volt	(Sunbelt) Kevin Dale 1/17/2023 8:00:53 AM	
	VAV 2.30 (Rm 246)								
		Flow Control		BAF					
		Flow Control / Flow Input	32.0 cfm	BAI	0	0:1	Flow Input	(Sunbelt) Peter Donovan 11/10/2022 5:44:22 AM	
		DA Temp	63.48 °F	BAI	0	0:1	Thermistor	(Sunbelt) Peter Donovan 11/10/2022 5:44:22 AM	
		Zone Temp	71.5 °F	ASVI				(Sunbelt) Peter Donovan 11/10/2022 5:38:50 AM	
		HW Valve	0.0 %	BAO	0	0:1	Electrical 0-10 Volt	(Sunbelt) Kevin Dale 1/17/2023 8:10:15 AM	
	VAV 2.31 (Rm 247)								
		Flow Control		BAF					
		Flow Control / Flow Input	14.0 cfm	BAI	0	0:1	Flow Input	(Sunbelt) Peter Donovan 11/10/2022 5:31:25 AM	
		DA Temp	77.07 °F	BAI	0	0:1	Thermistor	(Sunbelt) Peter Donovan 11/10/2022 5:31:25 AM	
		Zone Temp	70.7 °F	ASVI				(Sunbelt) Peter Donovan 11/10/2022 5:31:25 AM	
		HW Valve	0.0 %	BAO	0	0:1	Electrical 0-10 Volt	(Sunbelt) Kevin Dale 1/17/2023 8:24:42 AM	
	VAV 2.32 (Rm 248)								
		Flow Control		BAF					
		Flow Control / Flow Input	191.0 cfm	BAI	0	0:1	Flow Input	(Sunbelt) Peter Donovan 11/10/2022 5:19:50 AM	
		DA Temp	56.69 °F	BAI	0	0:1	Thermistor	(Sunbelt) Peter Donovan 11/10/2022 5:19:50 AM	
		Zone Temp	72.0 °F	ASVI				(Sunbelt) Peter Donovan 11/10/2022 5:19:50 AM	
		HW Valve	0.0 %	BAO	0	0:1	Electrical 0-10 Volt	(Sunbelt) Kevin Dale 1/17/2023 8:31:11 AM	
	VAV 2.33 CO2 (Rm 249)								
		Flow Control		BAF					
		Flow Control / Flow Input	432.0 cfm	BAI	0	0:1	Flow Input	(Sunbelt) Peter Donovan 11/10/2022 5:15:46 AM	
		DA Temp	57.14 °F	BAI	0	0:1	Thermistor	(Sunbelt) Peter Donovan 11/10/2022 4:37:27 AM	
		Zone CO2	431.0 ppm	ASVI				(Sunbelt) Peter Donovan 1/6/2023 3:29:42 PM	
		Zone Temp	72.2 °F	ASVI				(Sunbelt) Peter Donovan 11/10/2022 5:08:40 AM	
		EF Status	On	BBI	normal	0:2	Dry Contact	(Sunbelt) Peter Donovan 1/10/2023 3:14:28 PM	
		HW Valve	0.0 %	BAO	0	0:1	Electrical 0-10 Volt	(Sunbelt) Kevin Dale 1/17/2023 8:14:55 AM	
		EF S/S	Enabled	BBO	normal	0:1	Relay / Triac Output	(Sunbelt) Peter Donovan 1/10/2023 3:14:28 PM	
	VAV 3.15 (Rm 201)								
		Flow Control		BAF					
		Flow Control / Flow Input	172.0 cfm	BAI	0	0:1	Flow Input	(Sunbelt) Peter Donovan 11/15/2022 3:05:24 AM	
		DA Temp	60.04 °F	BAI	0	0:1	Thermistor	(Sunbelt) Peter Donovan 11/15/2022 12:23:02 AM	
		Zone Temp	71.7 °F	ASVI				(Sunbelt) Peter Donovan 11/15/2022 12:23:02 AM	
		HW Valve	0.0 %	BAO	0	0:1	Electrical 0-10 Volt	(Sunbelt) Kevin Dale 1/17/2023 10:52:55 AM	
	VAV 3.16 CO2 (Rm 203)								
		Flow Control		BAF					
		Flow Control / Flow Input	676.0 cfm	BAI	0	0:1	Flow Input	(Sunbelt) Mike Clark 11/11/2022 5:47:31 AM	
		DA Temp	59.02 °F	BAI	0	0:1	Thermistor	(Sunbelt) Peter Donovan 11/11/2022 5:33:10 AM	

Location	Control Program	Name	Value	Type	Offset / Polarity	Exp:Num	I/O Type	Checked Out	Checkout Notes
		Zone CO2	331.0 ppm	ASVI				(Sunbelt) Peter Donovan 1/6/2023 3:30:01 PM	
		Zone Temp	69.7 °F	ASVI				(Sunbelt) Peter Donovan 11/11/2022 5:32:57 AM	
		HW Valve	0.0 %	BAO	0	0:1	Electrical 0-10 Volt	(Sunbelt) Kevin Dale 1/17/2023 11:02:53 AM	
	VAV 3.17 CO2 (Rm 203)								
		Flow Control		BAF					
		Flow Control / Flow Input	265.0 cfm	BAI	0	0:1	Flow Input	(Sunbelt) Mike Clark 11/11/2022 5:51:14 AM	
		DA Temp	59.09 °F	BAI	0	0:1	Thermistor	(Sunbelt) Mike Clark 11/11/2022 5:51:09 AM	
		Zone CO2	411.0 ppm	ASVI				(Sunbelt) Peter Donovan 1/6/2023 3:30:08 PM	
		Zone Temp	69.5 °F	ASVI				(Sunbelt) Peter Donovan 11/11/2022 5:33:04 AM	
		HW Valve	0.0 %	BAO	0	0:1	Electrical 0-10 Volt	(Sunbelt) Kevin Dale 1/17/2023 11:39:22 AM	
	VAV 3.18 CO2 (Rm 204)								
		Flow Control		BAF					
		Flow Control / Flow Input	68.0 cfm	BAI	0	0:1	Flow Input	(Sunbelt) Mike Clark 11/11/2022 6:17:23 AM	
		DA Temp	72.25 °F	BAI	0	0:1	Thermistor	(Sunbelt) Peter Donovan 11/11/2022 5:33:16 AM	
		Zone CO2	385.0 ppm	ASVI				(Sunbelt) Peter Donovan 1/6/2023 3:30:36 PM	
		Zone Temp	69.7 °F	ASVI				(Sunbelt) Peter Donovan 11/11/2022 5:32:45 AM	
		HW Valve	0.0 %	BAO	0	0:1	Electrical 0-10 Volt	(Sunbelt) Kevin Dale 1/17/2023 11:39:14 AM	
	VAV 3.19 CO2 (Rm 205)								
		Flow Control		BAF					
		Flow Control / Flow Input	97.0 cfm	BAI	0	0:1	Flow Input	(Sunbelt) Peter Donovan 11/15/2022 12:10:22 AM	
		DA Temp	61.07 °F	BAI	0	0:1	Thermistor	(Sunbelt) Peter Donovan 11/11/2022 5:33:21 AM	
		Zone CO2	392.0 ppm	ASVI				(Sunbelt) Peter Donovan 1/6/2023 3:30:36 PM	
		Zone Temp	69.2 °F	ASVI				(Sunbelt) Peter Donovan 11/11/2022 5:32:51 AM	
		HW Valve	0.0 %	BAO	0	0:1	Electrical 0-10 Volt	(Sunbelt) Kevin Dale 1/17/2023 11:39:04 AM	
	VAV 3.20 CO2 (Rm 206)								
		Flow Control		BAF					
		Flow Control / Flow Input	80.0 cfm	BAI	0	0:1	Flow Input	(Sunbelt) Peter Donovan 11/15/2022 1:31:21 AM	
		DA Temp	60.64 °F	BAI	0	0:1	Thermistor	(Sunbelt) Peter Donovan 11/15/2022 12:34:08 AM	
		Zone CO2	424.0 ppm	ASVI				(Sunbelt) Peter Donovan 1/6/2023 3:30:36 PM	
		Zone Temp	70.0 °F	ASVI				(Sunbelt) Peter Donovan 11/15/2022 12:34:08 AM	
		HW Valve	0.0 %	BAO	0	0:1	Electrical 0-10 Volt	(Sunbelt) Kevin Dale 1/17/2023 11:09:30 AM	
	VAV 3.21 CO2 (Rm 208)								
		Flow Control		BAF					
		Flow Control / Flow Input	92.0 cfm	BAI	0	0:1	Flow Input	(Sunbelt) Peter Donovan 11/15/2022 2:08:57 AM	
		DA Temp	60.69 °F	BAI	0	0:1	Thermistor	(Sunbelt) Peter Donovan 11/15/2022 2:08:57 AM	
		Zone CO2	406.0 ppm	ASVI				(Sunbelt) Peter Donovan 1/6/2023 3:30:36 PM	
		Zone Temp	70.2 °F	ASVI				(Sunbelt) Peter Donovan 11/15/2022 2:08:57 AM	
		HW Valve	0.0 %	BAO	0	0:1	Electrical 0-10 Volt	(Sunbelt) Kevin Dale 1/17/2023 12:28:37 PM	
	VAV 3.22 CO2 (Rm 210)								

Location	Control Program	Name	Value	Type	Offset / Polarity	Exp:Num	I/O Type	Checked Out	Checkout Notes
		Flow Control		BAF					
		Flow Control / Flow Input	98.0 cfm	BAI	0	0:1	Flow Input	(Sunbelt) Peter Donovan 11/10/2022 4:46:55 AM	
		DA Temp	58.16 °F	BAI	0	0:1	Thermistor	(Sunbelt) Peter Donovan 11/10/2022 4:27:10 AM	
		Zone CO2	425.0 ppm	ASVI				(Sunbelt) Peter Donovan 12/3/2022 12:35:48 AM	
		Zone Temp	70.2 °F	ASVI				(Sunbelt) Peter Donovan 11/10/2022 4:27:06 AM	
		HW Valve	0.0 %	BAO	0	0:1	Electrical 0-10 Volt	(Sunbelt) Kevin Dale 1/17/2023 10:37:26 AM	
	VAV 3.23 (Rm 207)								
		Flow Control		BAF					
		Flow Control / Flow Input	560.0 cfm	BAI	0	0:1	Flow Input	(Sunbelt) Peter Donovan 11/15/2022 2:18:40 AM	
		DA Temp	56.11 °F	BAI	0	0:1	Thermistor	(Sunbelt) Peter Donovan 11/15/2022 2:09:15 AM	
		Zone Temp	72.7 °F	ASVI				(Sunbelt) Peter Donovan 11/15/2022 2:09:15 AM	
		HW Valve	0.0 %	BAO	0	0:1	Electrical 0-10 Volt	(Sunbelt) Kevin Dale 1/17/2023 10:30:16 AM	
	VAV 3.24 (Rm 211-212)								
		Flow Control		BAF					
		Flow Control / Flow Input	871.0 cfm	BAI	0	0:1	Flow Input	(Sunbelt) Peter Donovan 11/15/2022 3:13:47 AM	
		DA Temp	55.5 °F	BAI	0	0:1	Thermistor	(Sunbelt) Peter Donovan 11/15/2022 3:09:59 AM	
		Zone Temp	72.2 °F	ASVI				(Sunbelt) Peter Donovan 11/15/2022 3:13:47 AM	
		HW Valve	0.0 %	BAO	0	0:1	Electrical 0-10 Volt	(Sunbelt) Kevin Dale 1/17/2023 9:29:12 AM	
	VAV 3.25 (Rm 226)								
		Flow Control		BAF					
		Flow Control / Flow Input	207.0 cfm	BAI	0	0:1	Flow Input	(Sunbelt) Peter Donovan 11/15/2022 3:49:09 AM	
		DA Temp	57.7 °F	BAI	0	0:1	Thermistor	(Sunbelt) Peter Donovan 11/15/2022 3:41:51 AM	
		Zone Temp	73.9 °F	ASVI				(Sunbelt) Peter Donovan 11/15/2022 3:49:09 AM	
		HW Valve	0.0 %	BAO	0	0:1	Electrical 0-10 Volt	(Sunbelt) Kevin Dale 1/17/2023 10:00:53 AM	
	VAV 3.26 CO2 (Rm 225)								
		Flow Control		BAF					
		Flow Control / Flow Input	120.0 cfm	BAI	0	0:1	Flow Input	(Sunbelt) Peter Donovan 11/15/2022 3:40:00 AM	
		DA Temp	58.44 °F	BAI	0	0:1	Thermistor	(Sunbelt) Peter Donovan 11/15/2022 3:31:27 AM	
		Zone CO2	428.0 ppm	ASVI				(Sunbelt) Peter Donovan 11/30/2022 11:17:53 PM	
		Zone Temp	71.5 °F	ASVI				(Sunbelt) Peter Donovan 11/15/2022 3:29:52 AM	
		HW Valve	0.0 %	BAO	0	0:1	Electrical 0-10 Volt	(Sunbelt) Kevin Dale 1/17/2023 9:29:46 AM	
	VAV 3.27 (Rm 215)								
		Flow Control		BAF					
		Flow Control / Flow Input	91.0 cfm	BAI	0	0:1	Flow Input	(Sunbelt) Peter Donovan 11/15/2022 4:30:53 AM	
		DA Temp	72.8 °F	BAI	0	0:1	Thermistor	(Sunbelt) Peter Donovan 11/15/2022 4:27:49 AM	
		Zone Temp	71.9 °F	ASVI				(Sunbelt) Peter Donovan 11/15/2022 4:27:49 AM	
		HW Valve	0.0 %	BAO	0	0:1	Electrical 0-10 Volt	(Sunbelt) Kevin Dale 1/17/2023 10:25:23 AM	
	VAV 3.28 (Rm 217, 216)								
		Flow Control		BAF					
		Flow Control / Flow Input	108.0 cfm	BAI	0	0:1	Flow Input	(Sunbelt) Peter Donovan 11/15/2022 4:24:15 AM	
		DA Temp	68.68 °F	BAI	0	0:1	Thermistor	(Sunbelt) Peter Donovan 11/15/2022 4:16:59 AM	

Location	Control Program	Name	Value	Type	Offset / Polarity	Exp:Num	I/O Type	Checked Out	Checkout Notes
		Zone Temp	71.9 °F	ASVI				(Sunbelt) Peter Donovan 11/15/2022 4:16:59 AM	
		HW Valve	0.0 %	BAO	0	0:1	Electrical 0-10 Volt	(Sunbelt) Kevin Dale 1/17/2023 10:25:14 AM	
	VAV 3.29 (Rm 218, 219, 220)								
		Flow Control		BAF					
		Flow Control / Flow Input	54.0 cfm	BAI	0	0:1	Flow Input	(Sunbelt) Peter Donovan 11/15/2022 4:16:26 AM	
		DA Temp	70.0 °F	BAI	0	0:1	Thermistor	(Sunbelt) Peter Donovan 11/15/2022 4:16:26 AM	
		Zone Temp	71.7 °F	ASVI				(Sunbelt) Peter Donovan 11/15/2022 4:16:26 AM	
		HW Valve	0.0 %	BAO	0	0:1	Electrical 0-10 Volt	(Sunbelt) Kevin Dale 1/17/2023 10:13:52 AM	
	VAV 3.30 (Rm 221, 222, 223)								
		Flow Control		BAF					
		Flow Control / Flow Input	50.0 cfm	BAI	0	0:1	Flow Input	(Sunbelt) Peter Donovan 11/15/2022 3:23:40 AM	
		DA Temp	64.99 °F	BAI	0	0:1	Thermistor	(Sunbelt) Peter Donovan 11/15/2022 3:21:54 AM	
		Zone Temp	71.5 °F	ASVI				(Sunbelt) Peter Donovan 11/15/2022 3:22:25 AM	
		HW Valve	0.0 %	BAO	0	0:1	Electrical 0-10 Volt	(Sunbelt) Kevin Dale 1/17/2023 9:29:34 AM	
	VAV 3.31 (Rm 224)								
		Flow Control		BAF					
		Flow Control / Flow Input	317.0 cfm	BAI	0	0:1	Flow Input	(Sunbelt) Peter Donovan 11/15/2022 3:59:08 AM	
		DA Temp	58.65 °F	BAI	0	0:1	Thermistor	(Sunbelt) Peter Donovan 11/15/2022 3:53:43 AM	
		Zone Temp	69.7 °F	ASVI				(Sunbelt) Peter Donovan 11/15/2022 3:59:08 AM	
		HW Valve	0.0 %	BAO	0	0:1	Electrical 0-10 Volt	(Sunbelt) Kevin Dale 1/17/2023 12:48:43 PM	
	ACS-2 (Rm 238)								
		SA Temp	72.91 °F	BAI	0	0:2	Thermistor	(Sunbelt) Peter Donovan 1/10/2023 10:20:10 AM	
		Zone Temp	74.9 °F	ASVI				(Sunbelt) Peter Donovan 1/10/2023 10:20:10 AM	
		Fan Status	Off	BBI	normal	0:1	Dry Contact	(Sunbelt) Peter Donovan 1/10/2023 10:20:13 AM	
		Cooling Stage 1	Off	BBO	normal	0:3	Relay / Triac Output	(Sunbelt) Peter Donovan 1/10/2023 5:06:28 PM	
		Fan S/S	Disabled	BBO	normal	0:2	Relay / Triac Output	(Sunbelt) Peter Donovan 1/10/2023 10:21:02 AM	
/Los Medanos College (Pittsburgh Campus)/Science Building/First Floor/Lab 148									
	Lab 148 Manager								
		Zone Temp	69.5 °F	ASVI				(Sunbelt) Peter Donovan 12/20/2022 11:31:09 AM	
		CommonHoodAlarm	Normal	BBI	normal	0:2	Dry Contact	(Sunbelt) Peter Donovan 1/6/2023 3:35:20 PM	
		ZoneOcc	Off	BBI	normal	0:1	Dry Contact	(Acco) Andy Bruns 1/4/2023 6:21:20 AM	
	SUP 2.11								
		SA Airflow	1426.7 cfm	BAI	0	0:3	0-20 mA	(Sunbelt) Peter Donovan 12/20/2022 11:57:39 AM	
		SA DmprPosFdbk	95.7 %	BAI	0	0:4	0-20 mA	(Sunbelt) Peter Donovan 12/20/2022 11:57:32 AM	
		SA Temp	54.3 °F	BAI	0	0:5	Thermistor	(Sunbelt) Peter Donovan 12/2/2022 1:41:25 AM	
		HW VlvPos	0.0 %	BAO	0	0:2	Electrical 0-10 Volt	(Acco) Andy Bruns 1/12/2023 10:15:09 AM	
		SA AirflowStpt	1650.0 cfm	BAO	0	0:1	Electrical 0-10 Volt	(Sunbelt) Peter Donovan 12/20/2022 11:57:32 AM	
	GEX 2.11								

Location	Control Program	Name	Value	Type	Offset / Polarity	Exp:Num	I/O Type	Checked Out	Checkout Notes
		EA Airflow	1265.3 cfm	BAI	0	0:6	0-20 mA	(Sunbelt) Jacob Davis 12/28/2022 8:39:15 AM	
		EA DmprPosFdbk	62.6 %	BAI	0	0:7	0-20 mA	(Sunbelt) Jacob Davis 12/28/2022 8:39:15 AM	
		EA AirflowStpt	1283.7 cfm	BAO	0	0:3	Electrical 0-10 Volt	(Sunbelt) Peter Donovan 12/20/2022 12:06:25 PM	
	HEX 2.11								
		HoodAirflow	293.0 cfm	BAI	0	0:8	0-20 mA	(Sunbelt) Jacob Davis 12/28/2022 8:37:39 AM	
		HoodDmprPosFdbk	37.5 %	BAI	0	0:9	0-20 mA	(Sunbelt) Jacob Davis 12/28/2022 8:37:39 AM	
/Los Medanos College (Pittsburgh Campus)/Science Building/First Floor/Lab 129									
	Lab 129 Manager								
		Zone Temp	69.0 °F	ASVI				(Sunbelt) Peter Donovan 1/6/2023 1:18:47 PM	
		CommonHoodAlarm	Normal	BBI	normal	0:2	Dry Contact	(Sunbelt) Peter Donovan 1/6/2023 1:49:04 PM	
		ZoneOcc	Off	BBI	normal	0:1	Dry Contact	(Acco) Andy Bruns 1/3/2023 12:11:41 PM	
	SUP 2.9								
		SA Airflow	1765.7 cfm	BAI	0	0:3	0-20 mA	(Sunbelt) Jacob Davis 12/28/2022 8:51:08 AM	
		SA DmprPosFdbk	82.6 %	BAI	0	0:4	0-20 mA	(Sunbelt) Jacob Davis 12/28/2022 8:51:08 AM	
		SA Temp	52.9 °F	BAI	0	0:5	Thermistor	(Sunbelt) Peter Donovan 12/2/2022 4:11:24 AM	
		HW VlvPos	0.0 %	BAO	0	0:2	Electrical 0-10 Volt	(Acco) Andy Bruns 1/12/2023 12:44:24 PM	
		SA AirflowStpt	1761.0 cfm	BAO	0	0:1	Electrical 0-10 Volt	(Sunbelt) Jacob Davis 12/28/2022 8:51:08 AM	
	GEX 2.9								
		EA Airflow	1607.5 cfm	BAI	0	0:6	0-20 mA	(Acco) Andy Bruns 12/28/2022 9:06:05 AM	
		EA DmprPosFdbk	81.4 %	BAI	0	0:7	0-20 mA	(Acco) Andy Bruns 12/28/2022 9:06:05 AM	
		EA AirflowStpt	1618.5 cfm	BAO	0	0:3	Electrical 0-10 Volt	(Acco) Andy Bruns 12/28/2022 9:06:05 AM	
	HEX 2.9								
		HoodAirflow	297.2 cfm	BAI	0	0:8	0-20 mA	(Acco) Andy Bruns 12/28/2022 9:01:54 AM	
		HoodDmprPosFdbk	40.2 %	BAI	0	0:9	0-20 mA	(Acco) Andy Bruns 12/28/2022 9:01:54 AM	
/Los Medanos College (Pittsburgh Campus)/Science Building/First Floor/Lab 145									
	Lab 145 Manager								
		Zone Temp	69.7 °F	ASVI				(Sunbelt) Peter Donovan 1/6/2023 1:18:30 PM	
		CommonHoodAlarm	Normal	BBI	normal	0:2	Dry Contact	(Sunbelt) Peter Donovan 1/6/2023 1:18:30 PM	
		ZoneOcc	Off	BBI	normal	0:1	Dry Contact	(Acco) Andy Bruns 1/4/2023 6:20:59 AM	
	SUP 2.12								
		SA Airflow	777.9 cfm	BAI	0	0:3	0-20 mA	(Sunbelt) Jacob Davis 12/28/2022 8:07:25 AM	
		SA DmprPosFdbk	96.8 %	BAI	0	0:4	0-20 mA	(Sunbelt) Jacob Davis 12/28/2022 8:07:38 AM	
		SA Temp	87.9 °F	BAI	0	0:5	Thermistor	(Sunbelt) Peter Donovan 12/2/2022 4:01:57 AM	
		HW VlvPos	0.0 %	BAO	0	0:2	Electrical 0-10 Volt	(Acco) Andy Bruns 1/12/2023 11:16:00 AM	
		SA AirflowStpt	750.0 cfm	BAO	0	0:1	Electrical 0-10 Volt	(Sunbelt) Jacob Davis 12/28/2022 8:07:15 AM	
	GEX 2.12								
		EA Airflow	518.6 cfm	BAI	0	0:6	0-20 mA	(Sunbelt) Peter Donovan 1/13/2023 8:54:03 AM	
		EA DmprPosFdbk	94.2 %	BAI	0	0:7	0-20 mA	(Sunbelt) Peter Donovan 1/13/2023 8:54:03 AM	
		EA AirflowStpt	535.0 cfm	BAO	0	0:3	Electrical 0-10 Volt	(Sunbelt) Peter Donovan 1/13/2023 8:54:03 AM	
	HEX 2.12A								
		HoodAirflow	299.7 cfm	BAI	0	0:8	0-20 mA	(Sunbelt) Peter Donovan 1/13/2023 8:20:19 AM	

Location	Control Program	Name	Value	Type	Offset / Polarity	Exp:Num	I/O Type	Checked Out	Checkout Notes
		HoodDmprPosFdbk	45.7 %	BAI	0	0:9	0-20 mA	(Sunbelt) Peter Donovan 1/13/2023 8:20:19 AM	
	HEX 2.12B								
		HoodAirflow	79.3 cfm	BAI	0	0:11	0-20 mA	(Sunbelt) Peter Donovan 1/13/2023 8:37:17 AM	
		HoodDmprPosFdbk	35.1 %	BAI	0	0:12	0-20 mA	(Sunbelt) Peter Donovan 1/13/2023 8:37:17 AM	
/Los Medanos College (Pittsburgh Campus)/Science Building/First Floor/Lab 143									
	Lab 143 Manager								
		Zone Temp	69.0 °F	ASVI				(Sunbelt) Peter Donovan 12/27/2022 8:18:17 AM	
		CommonHoodAlarm	Normal	BBI	normal	0:2	Dry Contact	(Sunbelt) Peter Donovan 1/6/2023 1:33:25 PM	
		ZoneOcc	Off	BBI	normal	0:1	Dry Contact	(Acco) Andy Bruns 1/4/2023 6:20:45 AM	
	SUP 2.8								
		SA Airflow	1703.8 cfm	BAI	0	0:3	0-20 mA	(Sunbelt) Jacob Davis 12/20/2022 1:06:56 PM	
		SA DmprPosFdbk	72.6 %	BAI	0	0:4	0-20 mA	(Sunbelt) Jacob Davis 12/20/2022 1:06:56 PM	
		SA Temp	52.6 °F	BAI	0	0:5	Thermistor	(Sunbelt) Peter Donovan 12/2/2022 4:11:10 AM	
		HW VlvPos	0.0 %	BAO	0	0:2	Electrical 0-10 Volt	(Acco) Andy Bruns 1/12/2023 12:12:17 PM	
		SA AirflowStpt	1680.0 cfm	BAO	0	0:1	Electrical 0-10 Volt	(Sunbelt) Jacob Davis 12/20/2022 1:10:33 PM	
	GEX 2.8								
		EA Airflow	1554.7 cfm	BAI	0	0:6	0-20 mA	(Sunbelt) Jacob Davis 12/20/2022 1:08:05 PM	
		EA DmprPosFdbk	73.8 %	BAI	0	0:7	0-20 mA	(Sunbelt) Peter Donovan 12/27/2022 8:09:21 AM	
		EA AirflowStpt	1557.2 cfm	BAO	0	0:3	Electrical 0-10 Volt	(Sunbelt) Peter Donovan 12/27/2022 8:09:21 AM	
	HEX 2.8								
		HoodAirflow	296.6 cfm	BAI	0	0:8	0-20 mA	(Sunbelt) Jacob Davis 12/20/2022 1:07:18 PM	
		HoodDmprPosFdbk	39.6 %	BAI	0	0:9	0-20 mA	(Sunbelt) Jacob Davis 12/20/2022 1:07:18 PM	
/Los Medanos College (Pittsburgh Campus)/Science Building/First Floor									
	VAV 2.1 (Rm 124)								
		Flow Control		BAF					
		Flow Control / Flow Input	150.0 cfm	BAI	0	0:1	Flow Input	(Sunbelt) Peter Donovan 11/9/2022 3:34:15 AM	
		DA Temp	91.74 °F	BAI	0	0:1	Thermistor	(Sunbelt) Peter Donovan 11/9/2022 2:10:18 AM	
		Zone Temp	71.9 °F	ASVI				(Sunbelt) Peter Donovan 11/9/2022 2:10:18 AM	
		HW Valve	0.0 %	BAO	0	0:2	Electrical 0-10 Volt	(Acco) Andy Bruns 1/12/2023 12:19:32 PM	
	VAV 2.2 (Rm 124)								
		Flow Control		BAF					
		Flow Control / Flow Input	148.0 cfm	BAI	0	0:1	Flow Input	(Sunbelt) Peter Donovan 1/3/2023 12:15:52 PM	
		DA Temp	62.58 °F	BAI	0	0:1	Thermistor	(Sunbelt) Peter Donovan 11/9/2022 12:45:22 AM	
		Zone Temp	71.7 °F	ASVI				(Sunbelt) Peter Donovan 11/9/2022 12:45:25 AM	
		HW Valve	0.0 %	BAO	0	0:1	Electrical 0-10 Volt	(Acco) Andy Bruns 1/12/2023 12:45:42 PM	
	VAV 2.3 (Rm 133, 134)								
		Flow Control		BAF					
		Flow Control / Flow Input	1039.0 cfm	BAI	0	0:1	Flow Input	(Sunbelt) Peter Donovan 11/9/2022 1:58:49 AM	
		DA Temp	69.09 °F	BAI	0	0:1	Thermistor	(Sunbelt) Peter Donovan 11/9/2022 1:43:21 AM	
		Zone Temp	68.7 °F	ASVI				(Sunbelt) Peter Donovan 11/9/2022 1:46:45 AM	
		HW Valve	100.0 %	BAO	0	0:1	Electrical 0-10 Volt	(Acco) Andy Bruns 1/12/2023 12:25:40 PM	
	VAV 2.4 (Rm 132)								

Location	Control Program	Name	Value	Type	Offset / Polarity	Exp:Num	I/O Type	Checked Out	Checkout Notes
		Flow Control		BAF					
		Flow Control / Flow Input	1983.0 cfm	BAI	0	0:1	Flow Input	(Sunbelt) Peter Donovan 11/9/2022 1:24:08 AM	
		DA Temp	55.41 °F	BAI	0	0:1	Thermistor	(Sunbelt) Peter Donovan 11/9/2022 1:24:05 AM	
		Zone Temp	69.0 °F	ASVI				(Sunbelt) Peter Donovan 11/9/2022 3:34:46 AM	
		HW Valve	0.0 %	BAO	0	0:1	Electrical 0-10 Volt	(Acco) Andy Bruns 1/12/2023 12:31:07 PM	
	VAV 2.5 CO2 (Rm 142)								
		Flow Control		BAF					
		Flow Control / Flow Input	725.0 cfm	BAI	0	0:1	Flow Input	(Acco) Andy Bruns 1/5/2023 12:35:45 PM	
		DA Temp	56.46 °F	BAI	0	0:1	Thermistor	(Sunbelt) Peter Donovan 11/9/2022 2:51:23 AM	
		Room 138 Temp	87.87 °F	BAI	0	0:2	Thermistor	(Sunbelt) Peter Donovan 1/10/2023 6:34:37 AM	
		Zone CO2	410.0 ppm	ASVI				(Sunbelt) Peter Donovan 12/2/2022 11:22:57 PM	
		Zone Temp	70.0 °F	ASVI				(Sunbelt) Jacob Davis 1/3/2023 8:40:38 AM	
		HW Valve	0.0 %	BAO	0	0:1	Electrical 0-10 Volt	(Acco) Andy Bruns 1/12/2023 12:19:07 PM	
	VAV 2.6 CO2 (Rm 131)								
		Flow Control		BAF					
		Flow Control / Flow Input	596.0 cfm	BAI	0	0:1	Flow Input	(Sunbelt) Peter Donovan 11/8/2022 6:24:23 AM	
		DA Temp	56.09 °F	BAI	0	0:1	Thermistor	(Sunbelt) Peter Donovan 11/8/2022 5:53:44 AM	
		Zone CO2	425.0 ppm	ASVI				(Sunbelt) Peter Donovan 12/2/2022 11:41:18 PM	
		Zone Temp	70.7 °F	ASVI				(Sunbelt) Peter Donovan 1/17/2023 2:51:49 PM	
		HW Valve	0.0 %	BAO	0	0:1	Electrical 0-10 Volt	(Acco) Andy Bruns 1/12/2023 12:31:41 PM	
	VAV 2.7 CO2 (Rm 130)								
		Flow Control		BAF					
		Flow Control / Flow Input	584.0 cfm	BAI	0	0:1	Flow Input	(Sunbelt) Peter Donovan 11/8/2022 5:24:26 AM	
		DA Temp	54.99 °F	BAI	0	0:1	Thermistor	(Sunbelt) Peter Donovan 11/8/2022 5:04:20 AM	
		Zone CO2	553.0 ppm	ASVI				(Sunbelt) Peter Donovan 12/2/2022 11:41:04 PM	
		Zone Temp	70.5 °F	ASVI				(Sunbelt) Peter Donovan 11/8/2022 5:06:17 AM	
		HW Valve	0.0 %	BAO	0	0:1	Electrical 0-10 Volt	(Acco) Andy Bruns 1/12/2023 12:38:48 PM	
	VAV 2.10 (Rm 125, 127)								
		Flow Control		BAF					
		Flow Control / Flow Input	657.0 cfm	BAI	0	0:1	Flow Input	(Sunbelt) Peter Donovan 11/8/2022 2:36:40 AM	
		DA Temp	56.59 °F	BAI	0	0:1	Thermistor	(Sunbelt) Peter Donovan 11/8/2022 2:36:40 AM	
		Zone Temp	71.5 °F	ASVI				(Sunbelt) Peter Donovan 11/8/2022 2:32:05 AM	
		HW Valve	0.0 %	BAO	0	0:1	Electrical 0-10 Volt	(Acco) Andy Bruns 1/12/2023 7:23:31 AM	
	VAV 2.13 (Rm 144)								
		Flow Control		BAF					
		Flow Control / Flow Input	18.0 cfm	BAI	0	0:1	Flow Input	(Sunbelt) Peter Donovan 11/8/2022 4:13:19 AM	
		DA Temp	86.55 °F	BAI	0	0:1	Thermistor	(Sunbelt) Peter Donovan 11/8/2022 4:13:19 AM	
		Zone Temp	68.3 °F	ASVI				(Sunbelt) Peter Donovan 11/8/2022 4:13:19 AM	
		HW Valve	0.0 %	BAO	0	0:1	Electrical 0-10 Volt	(Acco) Andy Bruns 1/12/2023 11:04:19 AM	
	VAV 2.14 (Rm 146)								
		Flow Control		BAF					
		Flow Control / Flow Input	17.0 cfm	BAI	0	0:1	Flow Input	(Sunbelt) Peter Donovan 11/8/2022 4:01:00 AM	

Location	Control Program	Name	Value	Type	Offset / Polarity	Exp:Num	I/O Type	Checked Out	Checkout Notes
		DA Temp	74.36 °F	BAI	0	0:1	Thermistor	(Sunbelt) Peter Donovan 11/8/2022 4:01:00 AM	
		Zone Temp	70.9 °F	ASVI				(Sunbelt) Peter Donovan 11/8/2022 4:01:00 AM	
		HW Valve	0.0 %	BAO	0	0:1	Electrical 0-10 Volt	(Acco) Andy Bruns 1/12/2023 11:23:18 AM	
	VAV 2.15 CO2 (Rm 147)								
		Flow Control		BAF					
		Flow Control / Flow Input	128.0 cfm	BAI	0	0:1	Flow Input	(Sunbelt) Peter Donovan 11/8/2022 4:35:50 AM	
		DA Temp	61.65 °F	BAI	0	0:1	Thermistor	(Sunbelt) Peter Donovan 11/8/2022 4:35:50 AM	
		Zone CO2	411.0 ppm	ASVI				(Sunbelt) Peter Donovan 12/2/2022 11:40:38 PM	
		Zone Temp	68.5 °F	ASVI				(Sunbelt) Peter Donovan 11/8/2022 3:25:47 AM	
		HW Valve	0.0 %	BAO	0	0:1	Electrical 0-10 Volt	(Acco) Andy Bruns 1/12/2023 11:15:35 AM	
	VAV 2.16 (Rm 126)								
		Flow Control		BAF					
		Flow Control / Flow Input	17.0 cfm	BAI	0	0:1	Flow Input	(Sunbelt) Peter Donovan 11/8/2022 3:13:37 AM	
		DA Temp	68.38 °F	BAI	0	0:1	Thermistor	(Sunbelt) Peter Donovan 11/8/2022 3:13:37 AM	
		Zone Temp	71.7 °F	ASVI				(Sunbelt) Peter Donovan 11/8/2022 2:59:49 AM	
		HW Valve	0.0 %	BAO	0	0:1	Electrical 0-10 Volt	(Acco) Andy Bruns 1/12/2023 7:19:28 AM	
	VAV 3.1 (Rm 101)								
		Flow Control		BAF					
		Flow Control / Flow Input	311.0 cfm	BAI	0	0:1	Flow Input	(Sunbelt) Peter Donovan 11/9/2022 6:20:26 AM	
		DA Temp	61.98 °F	BAI	0	0:1	Thermistor	(Sunbelt) Peter Donovan 11/9/2022 6:20:26 AM	
		Zone Temp	71.2 °F	ASVI				(Sunbelt) Peter Donovan 11/9/2022 6:18:53 AM	
		HW Valve	0.0 %	BAO	0	0:1	Electrical 0-10 Volt	(Acco) Andy Bruns 1/12/2023 9:52:08 AM	
	VAV 3.2 CO2 (Rm 102)								
		Flow Control		BAF					
		Flow Control / Flow Input	568.0 cfm	BAI	0	0:1	Flow Input	(Sunbelt) Peter Donovan 11/9/2022 5:43:57 AM	
		DA Temp	87.0 °F	BAI	0	0:1	Thermistor	(Sunbelt) Peter Donovan 11/9/2022 3:45:45 AM	
		Zone CO2	472.0 ppm	ASVI				(Sunbelt) Peter Donovan 1/6/2023 3:30:36 PM	
		Zone Temp	70.5 °F	ASVI				(Sunbelt) Peter Donovan 11/9/2022 5:43:57 AM	
		HW Valve	0.0 %	BAO	0	0:1	Electrical 0-10 Volt	(Acco) Andy Bruns 1/12/2023 9:56:06 AM	
	VAV 3.3 CO2 (Rm 102)								
		Flow Control		BAF					
		Flow Control / Flow Input	563.0 cfm	BAI	0	0:1	Flow Input	(Sunbelt) Peter Donovan 11/9/2022 4:27:36 AM	
		DA Temp	59.08 °F	BAI	0	0:1	Thermistor	(Sunbelt) Peter Donovan 11/9/2022 4:27:36 AM	
		Zone CO2	493.0 ppm	ASVI				(Sunbelt) Peter Donovan 12/28/2022 7:00:06 AM	
		Zone Temp	69.5 °F	ASVI				(Sunbelt) Peter Donovan 11/9/2022 5:44:16 AM	
		HW Valve	0.0 %	BAO	0	0:1	Electrical 0-10 Volt	(Acco) Andy Bruns 1/12/2023 10:02:34 AM	
	VAV 3.4 CO2 (Rm 103)								
		Flow Control		BAF					
		Flow Control / Flow Input	96.0 cfm	BAI	0	0:1	Flow Input	(Sunbelt) Peter Donovan 11/9/2022 5:30:39 AM	
		DA Temp	77.36 °F	BAI	0	0:1	Thermistor	(Sunbelt) Peter Donovan 11/9/2022 5:03:55 AM	
		Zone CO2	441.0 ppm	ASVI				(Sunbelt) Peter Donovan 1/6/2023 3:30:36 PM	
		Zone Temp	70.7 °F	ASVI				(Sunbelt) Peter Donovan 11/9/2022 5:03:55 AM	

Location	Control Program	Name	Value	Type	Offset / Polarity	Exp:Num	I/O Type	Checked Out	Checkout Notes
		HW Valve	0.0 %	BAO	0	0:1	Electrical 0-10 Volt	(Acco) Andy Bruns 1/12/2023 11:36:14 AM	
	VAV 3.5 CO2 (Rm 104)								
		Flow Control		BAF					
		Flow Control / Flow Input	133.0 cfm	BAI	0	0:1	Flow Input	(Sunbelt) Peter Donovan 11/9/2022 5:23:51 AM	
		DA Temp	62.08 °F	BAI	0	0:1	Thermistor	(Sunbelt) Peter Donovan 11/9/2022 4:45:27 AM	
		Zone CO2	383.0 ppm	ASVI				(Sunbelt) Peter Donovan 12/2/2022 3:52:42 AM	
		Zone Temp	69.0 °F	ASVI				(Sunbelt) Peter Donovan 11/9/2022 5:02:04 AM	
		HW Valve	0.0 %	BAO	0	0:1	Electrical 0-10 Volt	(Acco) Andy Bruns 1/12/2023 10:05:48 AM	
	VAV 3.6 CO2 (Rm 152)								
		Flow Control		BAF					
		Flow Control / Flow Input	789.0 cfm	BAI	0	0:1	Flow Input	(Sunbelt) Peter Donovan 11/9/2022 4:12:06 AM	
		DA Temp	59.61 °F	BAI	0	0:1	Thermistor	(Sunbelt) Peter Donovan 11/9/2022 4:12:06 AM	
		Zone CO2	1560.0 ppm	ASVI				(Sunbelt) Peter Donovan 12/2/2022 3:52:33 AM	
		Zone Temp	70.2 °F	ASVI				(Sunbelt) Peter Donovan 11/9/2022 4:12:06 AM	
		HW Valve	0.0 %	BAO	0	0:1	Electrical 0-10 Volt	(Acco) Andy Bruns 1/12/2023 10:49:17 AM	
	VAV 3.7 (Rm 149)								
		Flow Control		BAF					
		Flow Control / Flow Input	81.0 cfm	BAI	0	0:1	Flow Input	(Sunbelt) Peter Donovan 11/15/2022 2:38:21 AM	
		DA Temp	66.44 °F	BAI	0	0:1	Thermistor	(Sunbelt) Peter Donovan 11/15/2022 2:38:21 AM	
		Zone Temp	71.7 °F	ASVI				(Sunbelt) Peter Donovan 11/15/2022 2:37:55 AM	
		HW Valve	0.0 %	BAO	0	0:1	Electrical 0-10 Volt	(Acco) Andy Bruns 1/12/2023 12:47:35 PM	Not accessible, swapped Min/Max
	VAV 3.8 (Rm 109-110)								
		Flow Control		BAF					
		Flow Control / Flow Input	736.0 cfm	BAI	0	0:1	Flow Input	(Sunbelt) Peter Donovan 11/10/2022 1:04:40 AM	
		DA Temp	58.7 °F	BAI	0	0:1	Thermistor	(Sunbelt) Peter Donovan 11/10/2022 1:04:40 AM	
		Zone Temp	72.4 °F	ASVI				(Sunbelt) Peter Donovan 11/10/2022 1:04:40 AM	
		HW Valve	0.0 %	BAO	0	0:1	Electrical 0-10 Volt	(Acco) Andy Bruns 1/12/2023 9:21:36 AM	
	VAV 3.9 (Rm 111)								
		Flow Control		BAF					
		Flow Control / Flow Input	64.0 cfm	BAI	0	0:1	Flow Input	(Sunbelt) Peter Donovan 11/10/2022 1:24:06 AM	
		DA Temp	62.16 °F	BAI	0	0:1	Thermistor	(Sunbelt) Peter Donovan 11/10/2022 1:24:06 AM	
		Zone Temp	71.7 °F	ASVI				(Sunbelt) Peter Donovan 11/10/2022 1:24:06 AM	
		HW Valve	0.0 %	BAO	0	0:1	Electrical 0-10 Volt	(Acco) Andy Bruns 1/12/2023 9:16:06 AM	
	VAV 3.10 (Rm 108, 112)								
		Flow Control		BAF					
		Flow Control / Flow Input	18.0 cfm	BAI	0	0:1	Flow Input	(Sunbelt) Peter Donovan 11/9/2022 6:21:13 AM	
		DA Temp	73.02 °F	BAI	0	0:1	Thermistor	(Sunbelt) Peter Donovan 11/9/2022 5:59:22 AM	
		Zone Temp	71.2 °F	ASVI				(Sunbelt) Peter Donovan 11/9/2022 6:06:34 AM	
		HW Valve	0.0 %	BAO	0	0:1	Electrical 0-10 Volt	(Acco) Andy Bruns 1/12/2023 9:15:39 AM	
	VAV 3.11 (Rm 113, 114, 115)								
		Flow Control		BAF					
		Flow Control / Flow Input	57.0 cfm	BAI	0	0:1	Flow Input	(Sunbelt) Peter Donovan 11/9/2022 5:56:05 AM	

Location	Control Program	Name	Value	Type	Offset / Polarity	Exp:Num	I/O Type	Checked Out	Checkout Notes
		DA Temp	71.03 °F	BAI	0	0:1	Thermistor	(Sunbelt) Peter Donovan 11/9/2022 5:44:46 AM	
		Zone Temp	70.9 °F	ASVI				(Sunbelt) Peter Donovan 11/9/2022 5:50:56 AM	
		HW Valve	0.0 %	BAO	0	0:1	Electrical 0-10 Volt	(Acco) Andy Bruns 1/12/2023 9:07:20 AM	
	VAV 3.12 (Rm 116, 117, 118)								
		Flow Control		BAF					
		Flow Control / Flow Input	53.0 cfm	BAI	0	0:1	Flow Input	(Sunbelt) Peter Donovan 11/10/2022 3:20:34 AM	
		DA Temp	69.44 °F	BAI	0	0:1	Thermistor	(Sunbelt) Peter Donovan 11/10/2022 3:20:34 AM	
		Zone Temp	70.5 °F	ASVI				(Sunbelt) Peter Donovan 11/10/2022 3:20:34 AM	
		HW Valve	0.0 %	BAO	0	0:1	Electrical 0-10 Volt	(Acco) Andy Bruns 1/12/2023 9:07:04 AM	
	VAV 3.13 (Rm 119, 118, 121)								
		Flow Control		BAF					
		Flow Control / Flow Input	55.0 cfm	BAI	0	0:1	Flow Input	(Sunbelt) Peter Donovan 11/10/2022 2:18:31 AM	
		DA Temp	64.55 °F	BAI	0	0:1	Thermistor	(Sunbelt) Peter Donovan 11/10/2022 1:56:32 AM	
		Zone Temp	71.9 °F	ASVI				(Sunbelt) Peter Donovan 11/10/2022 2:18:31 AM	
		HW Valve	0.0 %	BAO	0	0:1	Electrical 0-10 Volt	(Acco) Andy Bruns 1/12/2023 8:55:17 AM	
	VAV 3.14 (Rm 122)								
		Flow Control		BAF					
		Flow Control / Flow Input	160.0 cfm	BAI	0	0:1	Flow Input	(Sunbelt) Peter Donovan 11/10/2022 2:42:29 AM	
		DA Temp	60.89 °F	BAI	0	0:1	Thermistor	(Sunbelt) Peter Donovan 11/10/2022 2:42:29 AM	
		Zone Temp	71.9 °F	ASVI				(Sunbelt) Peter Donovan 11/10/2022 7:42:12 AM	
		HW Valve	0.0 %	BAO	0	0:1	Electrical 0-10 Volt	(Acco) Andy Bruns 1/12/2023 8:06:30 AM	
	ACS-1 (Rm 150)								
		SA Temp	75.32 °F	BAI	0	0:2	Thermistor	(Sunbelt) Peter Donovan 12/2/2022 3:09:35 AM	
		Zone Temp	79.6 °F	ASVI				(Sunbelt) Peter Donovan 12/2/2022 3:09:33 AM	
		Fan Status	Off	BBI	normal	0:1	Dry Contact	(Sunbelt) Peter Donovan 12/2/2022 3:14:36 AM	
		Cooling Stage 1	Off	BBO	normal	0:3	Relay / Triac Output	(Sunbelt) Peter Donovan 12/2/2022 3:31:30 AM	
		Fan S/S	Disabled	BBO	normal	0:2	Relay / Triac Output	(Sunbelt) Peter Donovan 12/2/2022 3:11:55 AM	
	IHWP, DHWP, HHW Temps								
		DHWS Temp	114.2 °F	BAI	0	0:4	Thermistor	(Sunbelt) Peter Donovan 12/2/2022 12:49:03 AM	
		HHWR Temp	104.2 °F	BAI	0	0:6	Thermistor	(Sunbelt) Peter Donovan 12/2/2022 12:49:03 AM	
		HHWS Temp	130.8 °F	BAI	0	0:5	Thermistor	(Sunbelt) Peter Donovan 12/2/2022 12:49:03 AM	
		IHWS Temp	112.9 °F	BAI	0	0:3	Thermistor	(Sunbelt) Peter Donovan 12/2/2022 12:48:51 AM	
		DHWP Status	On	BBI	normal	0:2	Dry Contact	(Sunbelt) Peter Donovan 12/2/2022 12:57:22 AM	
		IHWP Status	On	BBI	normal	0:1	Dry Contact	(Sunbelt) Peter Donovan 3/27/2023 12:56:13 PM	
		DHWP S/S	On	BBO	normal	0:2	Relay / Triac Output	(Sunbelt) Peter Donovan 12/2/2022 12:49:23 AM	
		IHWP S/S	On	BBO	normal	0:3	Relay / Triac Output	(Sunbelt) Peter Donovan 12/2/2022 1:17:06 AM	
/Los Medanos College (Pittsburgh Campus)/Science Building/Chiller Room									
	CHW System								
		CHW DP	34.6 psi	BAI	0.8	0:9	0-20 mA	(Sunbelt) Peter Donovan 4/7/2023 2:13:25 PM	
		CHW Flow	0.0	BAI	0	0:0	0-10 Volt	(Sunbelt) Peter Donovan 4/7/2023 2:13:25 PM	
		CHWP Speed Feedback	61.6 Hz	BAI	0	0:1	0-20 mA	(Sunbelt) Peter Donovan 3/29/2023 9:24:32 AM	
		CHWR Gauge	28.5 psig	BAI	0	0:10	0-20 mA	(Sunbelt) Peter Donovan 3/29/2023 9:20:42 AM	

Location	Control Program	Name	Value	Type	Offset / Polarity	Exp:Num	I/O Type	Checked Out	Checkout Notes
		CT Speed Feedback	59.3 Hz	BAI	0	0:2	0-20 mA	(Sunbelt) Peter Donovan 3/29/2023 9:55:31 AM	
		CWP Speed Feedback	59.5 Hz	BAI	0	0:16	0-20 mA	(Sunbelt) Peter Donovan 3/29/2023 9:24:32 AM	Fixed at drive 60Hz
		CWR Temp	69.9 °F	BAI	0	0:7	Thermistor	(Sunbelt) Peter Donovan 3/29/2023 8:27:42 AM	
		CWS Temp	65.9 °F	BAI	0	0:6	Thermistor	(Sunbelt) Peter Donovan 3/29/2023 8:27:42 AM	STPT 60* Per York
		OA Temp	61.13 °F	BAI	0	0:11	Thermistor	(Sunbelt) Peter Donovan 3/29/2023 8:48:13 AM	
		CHWP VFD Flt	Normal	BBI	normal	0:3	Dry Contact	(Sunbelt) Peter Donovan 3/29/2023 9:20:38 AM	
		CT SumpLevel-Hi	Normal	BBI	normal	0:12	Dry Contact	(Sunbelt) Peter Donovan 4/7/2023 2:13:31 PM	
		CT SumpLevel-Low	Normal	BBI	reversed	0:13	Dry Contact	(Sunbelt) Peter Donovan 4/7/2023 2:13:31 PM	
		CT VFD Flt	Normal	BBI	normal	0:4	Dry Contact	(Sunbelt) Peter Donovan 3/29/2023 9:19:01 AM	
		CHWP VFD Spd	100.0 %	BAO	0	0:4	Electrical 0-10 Volt	(Sunbelt) Peter Donovan 3/29/2023 9:12:24 AM	60/62
		CWP Speed	100.0 %	BAO	0	0:9	Electrical 0-10 Volt		
		CT Fan VFD Speed	99.7 %	BAO	0	0:5	Electrical 0-10 Volt	(Sunbelt) Peter Donovan 3/29/2023 9:09:12 AM	
		CHWP VFD S/S	Enabled	BBO	normal	0:1	Relay / Triac Output	(Sunbelt) Peter Donovan 3/29/2023 9:10:49 AM	
		CT VFD S/S	Enabled	BBO	normal	0:2	Relay / Triac Output	(Sunbelt) Peter Donovan 3/29/2023 9:09:16 AM	
		CWP VFD S/S	Enabled	BBO	normal	0:3	Relay / Triac Output	(Sunbelt) Peter Donovan 3/29/2023 9:10:49 AM	min/mx 60hz out 9
	ATS								
		ATS Normal	Off	BBI	reversed	0:2	Dry Contact	(Sunbelt) Peter Donovan 3/29/2023 11:21:34 AM	
	EF-7								
		EF Speed Feedback	-4.6 Hz	BAI	0	0:14	0-20 mA	(Sunbelt) Peter Donovan 8/23/2023 7:27:24 AM	
	FC								
		Zone Temp	68.5 °F	ASVI				(Sunbelt) Peter Donovan 3/27/2023 12:18:43 PM	
		FC Status	Off	BBI	normal	0:15	Dry Contact	(Sunbelt) Peter Donovan 3/27/2023 12:19:01 PM	
		FC CHW Vlv Pos	0.0 %	BAO	0	0:8	Electrical 0-10 Volt	(Sunbelt) Peter Donovan 4/7/2023 2:37:13 PM	
		FC S/S	Disabled	BBO	normal	0:7	Relay / Triac Output	(Sunbelt) Peter Donovan 3/27/2023 12:19:01 PM	
	DWP								
		DCW Gauge	58.9	BAI	0	0:4	0-10 Volt	(Sunbelt) Mike Clark 4/13/2023 3:23:48 PM	
		DWP-1 Fault	Off	BBI	normal	0:1	Dry Contact	(Sunbelt) Mike Clark 4/13/2023 3:23:13 PM	
		DWP-2 Fault	Off	BBI	normal	0:2	Dry Contact	(Sunbelt) Mike Clark 4/13/2023 3:23:17 PM	
		DWP-3 Fault	Off	BBI	normal	0:3	Dry Contact	(Sunbelt) Mike Clark 4/13/2023 3:23:27 PM	